NFPA® 270

Standard Test Method for Measurement of Smoke Obscuration Using a Conical Radiant Source in a Single Closed Chamber

2008 Edition

NFPA, 1 Batterymarch Park, Quincy, MA 02169-7471
An International Codes and Standards Organization

Copyright National Fire Protection Association
Provided by IHS under license with NFPA
No reproduction or networking permitted without license from IHS
Not for Resale

IMPORTANT NOTICES AND DISCLAIMERS CONCERNING NFPA DOCUMENTS

NOTICE AND DISCLAIMER OF LIABILITY CONCERNING THE USE OF NFPA DOCUMENTS

NFPA codes, standards, recommended practices, and guides, of which the document contained herein is one, are developed through a consensus standards development process approved by the American National Standards Institute. This process brings together volunteers representing varied viewpoints and interests to achieve consensus on fire and other safety issues. While the NFPA administers the process and establishes rules to promote fairness in the development of consensus, it does not independently test, evaluate, or verify the accuracy of any information or the soundness of any judgments contained in its codes and standards.

The NFPA disclaims liability for any personal injury, property or other damages of any nature whatsoever, whether special, indirect, consequential or compensatory, directly or indirectly resulting from the publication, use of, or reliance on this document. The NFPA also makes no guaranty or warranty as to the accuracy or completeness of any information published herein.

In issuing and making this document available, the NFPA is not undertaking to render professional or other services for or on behalf of any person or entity. Nor is the NFPA undertaking to perform any duty owed by any person or entity to someone else. Anyone using this document should rely on his or her own independent judgment or, as appropriate, seek the advice of a competent professional in determining the exercise of reasonable care in any given circumstances.

The NFPA has no power, nor does it undertake, to police or enforce compliance with the contents of this document. Nor does the NFPA list, certify, test or inspect products, designs, or installations for compliance with this document. Any certification or other statement of compliance with the requirements of this document shall not be attributable to the NFPA and is solely the responsibility of the certifier or maker of the statement.

--`,,```,,,,````-`-`,,`,,`,`,,`---

Copyright National Fire Protection Association
Provided by IHS under license with NFPA
No reproduction or networking permitted without license from IHS

Not for Resale

ADDITIONAL NOTICES AND DISCLAIMERS

Updating of NFPA Documents

Users of NFPA codes, standards, recommended practices, and guides should be aware that these documents may be superseded at any time by the issuance of new editions or may be amended from time to time through the issuance of Tentative Interim Amendments. An official NFPA document at any point in time consists of the current edition of the document together with any Tentative Interim Amendments and any Errata then in effect. In order to determine whether a given document is the current edition and whether it has been amended through the issuance of Tentative Interim Amendments or corrected through the issuance of Errata, consult appropriate NFPA publications such as the National Fire Codes® Subscription Service, visit the NFPA website at www.nfpa.org, or contact the NFPA at the address listed below.

Interpretations of NFPA Documents

A statement, written or oral, that is not processed in accordance with Section 6 of the Regulations Governing Committee Projects shall not be considered the official position of NFPA or any of its Committees and shall not be considered to be, nor be relied upon as, a Formal Interpretation.

Patents

The NFPA does not take any position with respect to the validity of any patent rights asserted in connection with any items which are mentioned in or are the subject of NFPA codes, standards, recommended practices, and guides, and the NFPA disclaims liability for the infringement of any patent resulting from the use of or reliance on these documents. Users of these documents are expressly advised that determination of the validity of any such patent rights, and the risk of infringement of such rights, is entirely their own responsibility.

NFPA adheres to applicable policies of the American National Standards Institute with respect to patents. For further information contact the NFPA at the address listed below.

Law and Regulations

Users of these documents should consult applicable federal, state, and local laws and regulations. NFPA does not, by the publication of its codes, standards, recommended practices, and guides, intend to urge action that is not in compliance with applicable laws, and these documents may not be construed as doing so.

Copyrights

This document is copyrighted by the NFPA. It is made available for a wide variety of both public and private uses. These include both use, by reference, in laws and regulations, and use in private self-regulation, standardization, and the promotion of safe practices and methods. By making this document available for use and adoption by public authorities and private users, the NFPA does not waive any rights in copyright to this document.

Use of NFPA documents for regulatory purposes should be accomplished through adoption by reference. The term "adoption by reference" means the citing of title, edition, and publishing information only. Any deletions, additions, and changes desired by the adopting authority should be noted separately in the adopting instrument. In order to assist NFPA in following the uses made of its documents, adopting authorities are requested to notify the NFPA (Attention: Secretary, Standards Council) in writing of such use. For technical assistance and questions concerning adoption of NFPA documents, contact NFPA at the address below.

For Further Information

All questions or other communications relating to NFPA codes, standards, recommended practices, and guides and all requests for information on NFPA procedures governing its codes and standards development process, including information on the procedures for requesting Formal Interpretations, for proposing Tentative Interim Amendments, and for proposing revisions to NFPA documents during regular revision cycles, should be sent to NFPA headquarters, addressed to the attention of the Secretary, Standards Council, NFPA, 1 Batterymarch Park, P.O. Box 9101, Quincy, MA 02269-9101.

For more information about NFPA, visit the NFPA website at www.nfpa.org.

--`,,```,,,,````-`-`,,`,,`,`,,`---

Copyright National Fire Protection Association
Provided by IHS under license with NFPA
No reproduction or networking permitted without license from IHS

Not for Resale

Copyright © 2007 National Fire Protection Association. All Rights Reserved.

NFPA 270

Standard Test Method for

Measurement of Smoke Obscuration Using a Conical Radiant Source in a Single Closed Chamber

2008 Edition

This edition of NFPA 270, *Standard Test Method for Measurement of Smoke Obscuration Using a Conical Radiant Source in a Single Closed Chamber*, was prepared by the Technical Committee on Fire Tests. It was issued by the Standards Council on June 4, 2007, with an effective date of June 24, 2007, and supersedes all previous editions.

This edition of NFPA 270 was approved as an American National Standard on June 24, 2007.

Origin and Development of NFPA 270

This standard is based on the 1997 edition of NFPA 258, *Standard Research Test Method for Determining Smoke Generation of Solid Materials*, with minor revisions. Originally, NFPA 258 was used for research and product development. NFPA 270 was developed so that it could be used within the regulatory community for enforcement purposes. This document was developed under a different title and number designation so as not to confuse the end user, and to establish and clarify the intention and limitations that are now part of the standard.

The 2002 edition of this standard was updated to incorporate the *Manual of Style for NFPA Technical Committee Documents* requirements and editorial updates.

The 2008 edition of this standard contains mainly editorial revisions and revised definitions for consistency with other standards.

Copyright National Fire Protection Association
Provided by IHS under license with NFPA
No reproduction or networking permitted without license from IHS
Not for Resale

Technical Committee on Fire Tests

William E. Fitch, *Chair*
Phyrefish Enterprises, Inc., FL [SE]

Barry L. Badders, Jr., Southwest Research Institute, TX [RT]
Jesse J. Beitel, Hughes Associates, Inc., MD [SE]
April L. Berkol, Starwood Hotels & Resorts Worldwide, Inc., NY [U]
Rep. American Hotel & Lodging Association
Robert G. Bill, Jr., FM Global, MA [I]
John A. Blair, The DuPont Company, DE [M]
Rep. Society of the Plastics Industry, Inc.
Gordon H. Damant, Inter-City Testing & Consulting Corp. of California, CA [SE]
Thomas W. Fritz, Armstrong World Industries, Inc., PA [M]
Pavinray D. Gandhi, Underwriters Laboratories Inc., IL [RT]
Gordon E. Hartzell, Hartzell Consulting, Inc., TX [SE]
Marcelo M. Hirschler, GBH International, CA [SE]
Alfred J. Hogan, Reedy Creek Improvement District, FL [E]
Rep. International Fire Marshals Association
William E. Koffel, Koffel Associates, Inc., MD [SE]
James R. Lawson, U.S. National Institute of Standards and Technology, MD [RT]
Rodney A. McPhee, Canadian Wood Council, Canada [M]
Frederick W. Mowrer, University of Maryland, MD [SE]
Deggary N. Priest, Intertek Testing Services NA, Inc., TX [RT]
David T. Sheppard, U.S. Department of Justice, MD [RT]
Kuma Sumathipala, American Forest & Paper Association, DC [M]
T. Hugh Talley, Hugh Talley Company, TN [M]
Rep. Upholstered Furniture Action Council
Rick Thornberry, The Code Consortium, Inc., CA [SE]
William A. Webb, Schirmer Engineering Corporation, IL [I]
Robert A. Wessel, Gypsum Association, DC [M]
Robert J. Wills, American Iron and Steel Institute, AL [M]
Rep. American Iron and Steel Institute

Alternates

Robert M. Berhinig, Underwriters Laboratories Inc., IL [RT]
(Alt. to P. D. Gandhi)
Delbert F. Boring, Jr., American Iron and Steel Institute, OH [M]
(Alt. to R. J. Wills)
Richard J. Davis, FM Global, MA [I]
(Alt. to R. G. Bill, Jr.)
Sam W. Francis, American Forest & Paper Association, PA [M]
(Alt. to K. Sumathipala)
Richard G. Gann, Ph.D., U.S. National Institute of Standards and Technology, MD [RT]
(Alt. to J. R. Lawson)
Paul A. Hough, Armstrong World Industries, Inc., PA [M]
(Alt. to T. W. Fritz)
Marc L. Janssens, Southwest Research Institute, TX [RT]
(Alt. to B. L. Badders, Jr.)
James K. Lathrop, Koffel Associates, Inc., CT [SE]
(Alt. to W. E. Koffel)
James A. Milke, University of Maryland, MD [SE]
(Alt. to F. W. Mowrer)
Arthur J. Parker, Hughes Associates, Inc., MD [SE]
(Alt. to J. J. Beitel)
Ineke Van Zeeland, Canadian Wood Council, Canada [M]
(Alt. to R. A. McPhee)
Joe Ziolkowski, American Furniture Manufacturers Association, NC [M]
(Alt. to T. H. Talley)

Nonvoting

Robert H. Barker, American Fiber Manufacturers Association, VA [M]
Rohit Khanna, U.S. Consumer Product Safety Commission, MD [C]

Gregory E. Harrington, NFPA Staff Liaison

This list represents the membership at the time the Committee was balloted on the final text of this edition. Since that time, changes in the membership may have occurred. A key to classifications is found at the back of the document.

NOTE: Membership on a committee shall not in and of itself constitute an endorsement of the Association or any document developed by the committee on which the member serves.

Committee Scope: This Committee shall have primary responsibility for documents on fire testing procedures, for reviewing existing fire test standards and recommending appropriate action to NFPA, for recommending the application of and advising on the interpretation of acceptable test standards for fire problems of concern to NFPA technical committees and members, and for acting in a liaison capacity between NFPA and the committees of other organizations writing fire test standards. This Committee does not cover fire tests that are used to evaluate extinguishing agents, devices, or systems.

Copyright National Fire Protection Association
Provided by IHS under license with NFPA
No reproduction or networking permitted without license from IHS
Not for Resale

Contents

Chapter 1 Administration **270–** 4
1.1 Scope **270–** 4
1.2 Purpose. (Reserved) **270–** 4
1.3 Application **270–** 4
1.4 Units and Formulas **270–** 5

Chapter 2 Referenced Publications **270–** 5
2.1 General **270–** 5
2.2 NFPA Publications. (Reserved) **270–** 5
2.3 Other Publications **270–** 5
2.4 References for Extracts in Mandatory Sections **270–** 5

Chapter 3 Definitions **270–** 6
3.1 General **270–** 6
3.2 NFPA Official Definitions **270–** 6
3.3 General Definitions **270–** 6

Chapter 4 Test Apparatus **270–** 6
4.1 General **270–** 6
4.2 Test Chamber **270–** 6
4.3 Sample Support and Heating Arrangements **270–** 7
4.4 Gas Supply **270–** 9
4.5 Photometric System **270–** 9
4.6 Chamber Leakage **270–**11
4.7 Cleaning Materials **270–**11
4.8 Ancillary Equipment **270–**11

Chapter 5 Test Environment **270–**11
5.1 Light Interference **270–**11
5.2 Product of Combustion Venting **270–**11
5.3 Operator Safety **270–**11

Chapter 6 Test Specimen **270–**12
6.1 Suitability of Sample for Testing **270–**12
6.2 Sample Face **270–**12
6.3 Number of Specimens **270–**12
6.4 Additional Specimens **270–**12
6.5 Size of Specimens **270–**12
6.6 Specimen Preparation **270–**12
6.7 Wrapping of Specimens **270–**12

Chapter 7 Setup, Calibration, and Maintenance ... **270–**13
7.1 Setup and Calibration Procedures **270–**13
7.2 Alignment of Photometric System **270–**13
7.3 Selection of Compensating Filter(s) **270–**13
7.4 Linearity Check **270–**13
7.5 Calibration of Range-Extension Filter **270–**13
7.6 Chamber Leakage Rate Test **270–**13
7.7 Burner Calibration **270–**14
7.8 Radiator Cone Calibration **270–**14
7.9 Cleaning **270–**14
7.10 Frequency of Checking and Calibrating Procedures **270–**14
7.11 Total System **270–**14

Chapter 8 Conditioning **270–**15
8.1 Pre-Test **270–**15
8.2 Conditioning **270–**15

Chapter 9 Test Procedure **270–**15
9.1 Initial Conditions **270–**15
9.2 Tests with Pilot Flame **270–**15
9.3 Preparation of Photometric System **270–**16
9.4 Loading Specimen **270–**16
9.5 Recording of Light Transmission **270–**16
9.6 Observations **270–**16
9.7 Termination of Test **270–**16
9.8 Specimen Mass **270–**16
9.9 Repeat Tests **270–**16

Chapter 10 Calculations **270–**17
10.1 Specific Optical Density, D_s **270–**17
10.2 Clear Beam Correction Factor, D_c **270–**17
10.3 Mass Loss **270–**17

Chapter 11 Test Report **270–**17
11.1 Descriptive Information **270–**17
11.2 Test Results **270–**17

Annex A Explanatory Material **270–**18

Annex B Precision and Bias **270–**20

Annex C Interlaboratory Application **270–**21

Annex D Determination of Mass Optical Density **270–**23

Annex E Informational References **270–**27

Index **270–**28

Copyright National Fire Protection Association
Provided by IHS under license with NFPA
No reproduction or networking permitted without license from IHS
Not for Resale

NFPA 270

Standard Test Method for

Measurement of Smoke Obscuration Using a Conical Radiant Source in a Single Closed Chamber

2008 Edition

IMPORTANT NOTE: This NFPA document is made available for use subject to important notices and legal disclaimers. These notices and disclaimers appear in all publications containing this document and may be found under the heading "Important Notices and Disclaimers Concerning NFPA Documents." They can also be obtained on request from NFPA or viewed at www.nfpa.org/disclaimers.

NOTICE: An asterisk (*) following the number or letter designating a paragraph indicates that explanatory material on the paragraph can be found in Annex A.

Changes other than editorial are indicated by a vertical rule beside the paragraph, table, or figure in which the change occurred. These rules are included as an aid to the user in identifying changes from the previous edition. Where one or more complete paragraphs have been deleted, the deletion is indicated by a bullet (•) between the paragraphs that remain.

A reference in brackets [ ] following a section or paragraph indicates material that has been extracted from another NFPA document. As an aid to the user, the complete title and edition of the source documents for extracts in mandatory sections of the document are given in Chapter 2 and those for extracts in informational sections are given in Annex E. Editorial changes to extracted material consist of revising references to an appropriate division in this document or the inclusion of the document number with the division number when the reference is to the original document. Requests for interpretations or revisions of extracted text shall be sent to the technical committee responsible for the source document.

Information on referenced publications can be found in Chapter 2 and Annex E.

Chapter 1 Administration

1.1 Scope.

1.1.1 This shall be a fire-test-response standard.

1.1.2 This test method shall provide a means of measuring smoke obscuration resulting from subjecting essentially flat materials, products, or assemblies (including surface finishes) not exceeding 25 mm in thickness, to specified levels of thermal irradiance from a conical heater, in a single closed chamber, in the absence or presence of a pilot flame, and when placed in a horizontal orientation.

1.1.3 The principal fire-test-response characteristic obtained from this test method shall be the specific optical density of smoke from the specimens tested, which is obtained as a function of time, for a period of 10 minutes.

1.1.4 Other fire-test-response characteristics shall also be permitted to be determined.

1.1.5 An optional fire-test-response characteristic measurable with this test method shall be the mass optical density, which is the specific optical density of smoke divided by the mass lost by the specimens during the test.

1.1.6 This test method shall be based on ISO 5659-2, *Determination of Specific Optical Density by a Single-Chamber Test*, and shall provide equivalent results to ISO 5659-2.

1.1.7 The fire-test-response characteristics obtained from this test shall be specific to the specimen tested, in the form and thickness tested, and shall not be inherent properties of the material, product, or assembly.

1.1.8* This test method shall not provide information on the fire performance of the test specimens under fire conditions other than those conditions specified in this test method.

1.1.9 This standard shall measure and describe the response of materials, products, or assemblies to heat and flame under controlled conditions, but shall not by itself incorporate all factors required for fire hazard or fire risk assessment of the materials, products, or assemblies under actual fire conditions.

1.1.10* Fire testing of products and materials is inherently hazardous, and safeguards for personnel and property shall be employed in conducting these tests.

1.1.11 This standard shall not purport to address all of the safety problems, if any, associated with its use.

1.1.12 It shall be the responsibility of the user of this standard to establish the necessary safety and health practices and determine the applicability of regulatory limitations prior to use.

1.2 Purpose. (Reserved)

1.3 Application.

1.3.1 Summary of Test Method.

1.3.1.1 Energy Source.

1.3.1.1.1 This test method shall employ a conically shaped, electrically heated radiant energy source contained within a stainless steel tube and positioned so as to produce an irradiance level of up to 50 kW/m^2, averaged over the center of the exposed surface of an essentially flat specimen, mounted horizontally, to determine smoke obscuration inside a closed chamber.

1.3.1.1.2 The actual irradiance levels used for standard testing shall be 25 kW/m^2 and 50 kW/m^2.

1.3.1.2 Specimen. The specimen shall be 75 mm × 75 mm at a thickness not exceeding 25 mm and shall be mounted horizontally within a holder.

1.3.1.3 Pilot Flame.

1.3.1.3.1 The exposure shall be conducted in the absence or in the presence of a pilot flame as described in 4.3.6.1.

1.3.1.3.2 If the pilot flame is present, the test shall be deemed to be in the "flaming" mode; if the pilot flame is absent, the test shall be deemed to be in the "nonflaming" mode.

1.3.1.4 Light Transmissions.

1.3.1.4.1 The test specimens shall be exposed to nonflaming or flaming conditions within a closed chamber.

1.3.1.4.2 A photometric system with a vertical light path shall be used to measure the varying light transmission as smoke accumulates.

Copyright National Fire Protection Association
Provided by IHS under license with NFPA
No reproduction or networking permitted without license from IHS
Not for Resale

1.3.1.4.3 The light transmittance measurements shall be used to calculate the specific optical density of the smoke generated during the test.

1.3.1.5 Exposure.

1.3.1.5.1 The specimens shall be exposed to two conditions out of the four standard exposure conditions, to be chosen by the test requester.

1.3.1.5.2 The four standard exposure conditions shall be as follows:

(1) Flaming at an irradiance of 25 kW/m^2
(2) Flaming at an irradiance of 50 kW/m^2
(3) Nonflaming at an irradiance of 25 kW/m^2
(4) Nonflaming at an irradiance of 50 kW/m^2

1.3.1.5.3 The default conditions for testing, unless specified otherwise, shall be those in the flaming mode.

1.3.1.5.4 Exposures to other irradiances shall also be permitted.

1.3.1.6* Mass Optical Density. Mass optical density shall be an optional fire-test-response characteristic obtained from this test method by using a load cell that continuously monitors the mass of the test specimen.

1.3.2 Significance and Use.

1.3.2.1* Specific Optical Density.

1.3.2.1.1 This test method shall provide a means for determining the specific optical density of the smoke generated by specimens of materials, products, or assemblies under the specified exposure conditions.

1.3.2.1.2 Values determined by this test method shall be specific to the specimen in the form and thickness tested and shall not be inherent fundamental properties of the material, product, or assembly.

1.3.2.1.3 Therefore, closely repeatable or reproducible experimental results shall not be expected from this test method when tests are conducted for a given material, product, or assembly, while introducing variations in properties such as specimen thickness or density.

1.3.2.2* Physiological Aspects. Physiological aspects associated with vision shall not be measured by this test method.

1.3.2.3* Smoke Obscuration. Predicting the smoke obscuration to be generated by the specimens upon exposure to heat or flame under any fire conditions other than those specified shall not be permitted.

1.3.3 Limitations.

1.3.3.1 Behavior. The following behavior during a test shall render that test invalid:

(1) Self-ignition in the nonflaming mode
(2) A specimen being displaced from the zone of controlled irradiance so as to touch the pilot burner or the pilot flame
(3) Extinction of the pilot flame (even for a short period of time) in the flaming mode
(4) Molten material overflowing the specimen holder

1.3.3.2* Data Evaluation. Evaluation of the data obtained, together with the individual masses, shall assist in assessing the reasons for any observed variation in measurements.

1.3.3.3* Sample Thickness. The results of the test shall apply only to the thickness of the sample being tested.

1.3.3.4* Sensitivity. Sensitivity to variations shall require that when changing to another sample to be tested, it shall first be necessary to clean and remove from the walls all accumulated residues to ensure that chemical or physical recombination with the effluents or residues produced as a result of the thermal irradiance does not affect the data obtained.

1.3.3.5* Test Conditions. In this test method, the specimens shall be subjected to one or more specific sets of laboratory test conditions.

1.3.3.5.1 If different test conditions are substituted or the end-use conditions are changed, it shall not always be possible by this test method to predict changes in the fire-test-response characteristics being measured.

1.3.3.5.2 Therefore, the results shall be valid only for the fire-test-exposure conditions described in this test.

1.3.3.6* Optical Density. Information relating the specific optical density measurement obtained by this test method to the mass lost by the specimen during the test shall be possible only by using the (optional) load cell to determine the mass optical density.

1.3.3.7* Dynamic Measurements. This test method shall not use dynamic measurements.

1.3.3.8 Smoke Obscuration. Therefore, the smoke obscuration values obtained shall not represent conditions of open fires.

1.4 Units and Formulas. The values stated in SI units shall be considered the required values of this standard.

Chapter 2 Referenced Publications

2.1 General. The documents or portions thereof listed in this chapter are referenced within this standard and shall be considered part of the requirements of this document.

2.2 NFPA Publications. (Reserved)

2.3 Other Publications.

2.3.1 ASTM Publications. ASTM International, 100 Barr Harbor Drive, P.O. Box C700, West Conshohocken, PA 19428-2959.

ASTM E 176, *Terminology of Fire Standards*, 2001.

2.3.2 ISO Publications. International Standards Organization, 1 rue de Varembé, Case Postale 56, CH-1211 Genève 20, Switzerland.

ISO 5659-2, *Determination of Specific Optical Density by a Single-Chamber Test*, 1994.

ISO 13943, *Fire Safety — Vocabulary*, 2000.

2.3.3 Other Publications.

Merriam-Webster's Collegiate Dictionary, 11th edition, Merriam-Webster, Inc., Springfield, MA, 2003.

2.4 References for Extracts in Mandatory Sections.

NFPA 271, *Standard Method of Test for Heat and Visible Smoke Release Rates for Materials and Products Using an Oxygen Consumption Calorimeter*, 2004 edition.

Copyright National Fire Protection Association
Provided by IHS under license with NFPA
No reproduction or networking permitted without license from IHS
Not for Resale

Chapter 3 Definitions

3.1 General. The definitions contained in this chapter shall apply to the terms used in this standard. Where terms are not defined in this chapter or within another chapter, they shall be defined using their ordinarily accepted meanings within the context in which they are used. *Merriam-Webster's Collegiate Dictionary*, 11th edition, shall be the source for the ordinarily accepted meaning.

3.2 NFPA Official Definitions.

3.2.1 Shall. Indicates a mandatory requirement.

3.3 General Definitions. For definitions of terms used in this test method, refer to the terminology contained in ASTM E 176, *Terminology of Fire Standards*, and ISO 13943, *Fire Safety — Vocabulary*.

3.3.1 Assembly. A unit or structure composed of a combination of materials or products, or both.

3.3.2 Composite. A combination of materials that are generally recognized as distinct entities — for example, coated or laminated materials.

3.3.3 Continuous (as related to data acquisition). Conducted at data collection intervals of 5 seconds or less.

3.3.4 Exposed Surface. That surface of the specimen subjected to the incident heat.

3.3.5 Mass Optical Density (MOD). The ratio of the optical density of smoke and the mass loss of the test specimen, multiplied by the volume of the test chamber and divided by the length of the light path.

3.3.6 Sample. An amount of the material, product, or assembly to be tested that is representative of the item as a whole.

3.3.7 Self-Ignition. The initiation of combustion as evidenced by the observed presence of flame.

3.3.8 Smoke Obscuration. The reduction of light transmission by smoke, as measured by light attentuation. [**271,** 2004]

3.3.9 Time to Ignition. Time between the start of the test and the presence of a flame on or over most of the specimen surface for a period of at least 4 seconds.

Chapter 4 Test Apparatus

4.1 General. The apparatus shall consist of an airtight test chamber with provision for containing a sample holder, radiator cone, pilot burner, light transmission and measuring system, and other ancillary facilities for controlling the conditions of operation during a test as shown in Figure 4.1.

4.2 Test Chamber.

4.2.1 Fabrication. The test chamber shall be fabricated from laminated panels, the inner surfaces of which shall consist of either a porcelain-enameled metal not more than 1 mm thick, or an equivalent coated metal that is resistant to chemical attack and corrosion and capable of easy cleaning. See Figure 4.1 and Figure 4.2.1.

4.2.1.1 The internal dimensions of the chamber shall be 914 mm ± 3 mm long, 914 mm ± 3 mm high as shown in Figure 4.2.1, and 610 mm ± 3 mm deep.

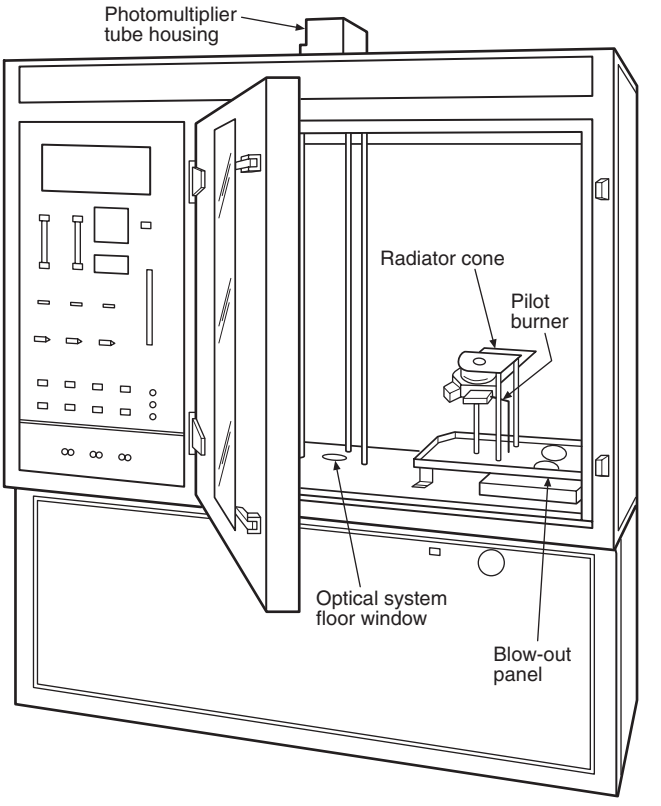

FIGURE 4.1 Typical Arrangement of Test Chamber.

4.2.1.2 The chamber shall be provided with a hinged front-mounted door with an observation window and a removable opaque door cover to the window to prevent light from entering the chamber.

4.2.2* Panel. A safety blow-out panel consisting of a sheet of aluminum foil not greater than 0.04 mm thick and having a minimum area of 80,600 mm^2 shall be provided in the chamber, fastened in such a way as to provide an airtight seal.

4.2.3 Optical Windows.

4.2.3.1 Two optical windows, each with a diameter of 75 mm ± 1 mm, shall be mounted, one each in the top and bottom of the cabinet, at the position shown in Figure 4.2.1, with their interior faces flush with the outside of the cabinet lining.

4.2.3.2* The underside of the window on the floor shall be provided with an electric heater of approximately 9 W capacity in the form of a ring, which shall be capable of maintaining the upper surface of the window at a temperature of at least 50°C and which shall be mounted around the window's edge so as not to interrupt the light path.

4.2.3.3 Optical platforms 8 mm ± 0.1 mm thick shall be mounted around the windows on the outside of the chamber and shall be held rigidly in position relative to each other by three metal rods, each with a diameter of at least 12.5 mm, extending through the chamber and fastened securely to the platforms.

4.2.4 Other Cabinet Openings.

4.2.4.1 Other openings in the cabinet shall be provided for the required services, as specified.

Copyright National Fire Protection Association
Provided by IHS under license with NFPA
No reproduction or networking permitted without license from IHS
Not for Resale

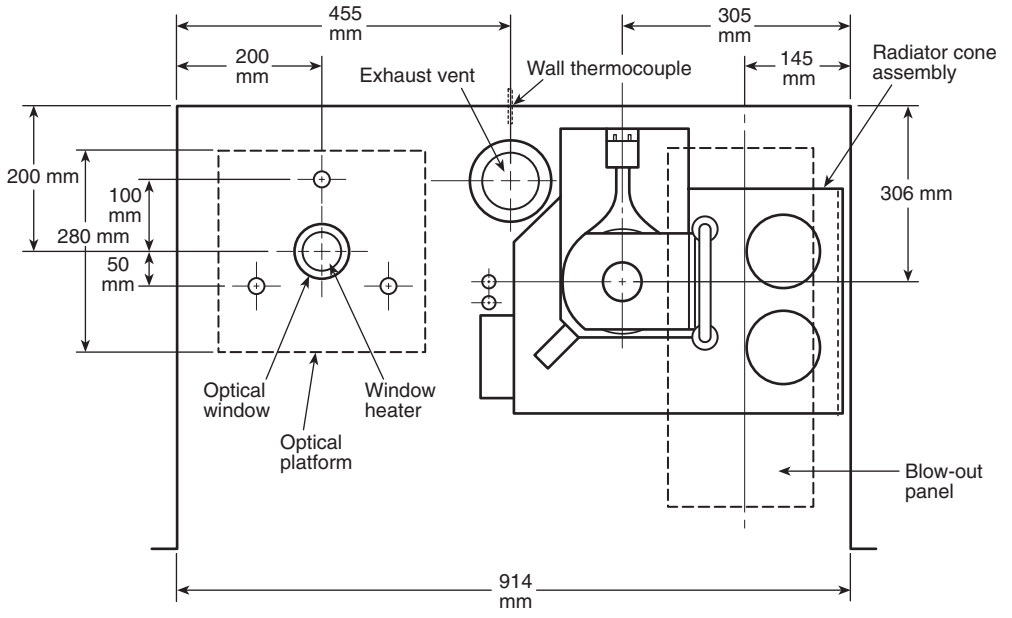

FIGURE 4.2.1 Plan View of Typical Test Chamber.

4.2.4.2 Cabinet openings shall be capable of being closed so that a positive pressure up to 1.5 kPa above atmospheric pressure can be developed inside the chamber as described in 4.2.6 and maintained when checked in accordance with Sections 4.6 and 7.6.

4.2.4.3 All components of the chamber shall be capable of withstanding a greater internal positive pressure than the safety blow-out panel.

4.2.5 Inlet Vent. An inlet vent with a shutter shall be provided at the top of the chamber, either on the front or on the roof, and away from the radiator cone, and an exhaust vent with a shutter shall be provided in the bottom of the chamber to lead, via flexible pipe with a diameter of 50 mm to 100 mm, to an extraction fan capable of creating a negative pressure of at least 0.5 kPa.

4.2.6* Chamber Pressure Control Facilities.

4.2.6.1 Provision shall be made for controlling the pressure inside the test chamber.

4.2.6.2 A manometer, with a range of up to 1.5 kPa, shall be provided for connection to a pressure regulator and to a tube in the top of the chamber.

4.2.7 Thermocouple Junction.

4.2.7.1 A thermocouple measuring junction made from wires of a diameter not greater than 1 mm shall be mounted on the inside of the back wall of the chamber, at the geometric center, by means of an insulating disc (such as polystyrene foam) that has a thickness of 6.5 mm ± 0.2 mm and a diameter of not more than 20 mm attached with an adhesive intended for such purposes.

4.2.7.2 The thermocouple junction shall be connected to a recorder, meter, or data acquisition unit, and the system shall be capable of measuring temperatures in the range of 35°C to 60°C as described in 9.1.3.3.

4.3 Sample Support and Heating Arrangements.

4.3.1 Radiator Cone.

4.3.1.1 Heating Element. The radiator cone, as shown in Figure 4.3.1.1, shall consist of a heating element of nominal rating 450 W contained within a stainless steel tube, 2210 mm ± 5 mm in length and 6.5 mm ± 0.2 mm in diameter, coiled into the shape of a truncated cone and fitted into a shade.

4.3.1.1.1 The shade shall have an overall height of 45 mm ± 0.04 mm, an internal diameter of 55 mm ± 1 mm, and an internal base diameter of 110 mm ± 3 mm.

4.3.1.1.2 The shade shall consist of two layers of 1 mm ± 0.1 mm thick stainless steel with a 10 mm ± 0.5 mm thickness of ceramic fiber insulation of nominal density 100 kg/m^3 sandwiched between them.

4.3.1.1.3 The heating element shall be clamped by two plates at the top and bottom of the element.

4.3.1.2 Radiator Cone Irradiance.

4.3.1.2.1 The radiator cone shall be capable of providing irradiance in the range of 10 to 50 kW/m^2, at the center of the surface of the specimen.

4.3.1.2.2 When the irradiance is determined at two other positions, 25 mm ± 2 mm each side of the specimen center, the irradiance at these two positions shall be not less than 85 percent or not more than 115 percent of the irradiance at the center of the specimen.

4.3.1.3* Irradiance Control.

4.3.1.3.1 The irradiance of the radiator cone shall be controlled by reference to the averaged reading of two Type K thermocouples.

4.3.1.3.2 The thermocouples shall have a 1.6 mm ± 0.2 mm outside diameter, sheathed with an unexposed hot junction,

Copyright National Fire Protection Association
Provided by IHS under license with NFPA
No reproduction or networking permitted without license from IHS
Not for Resale

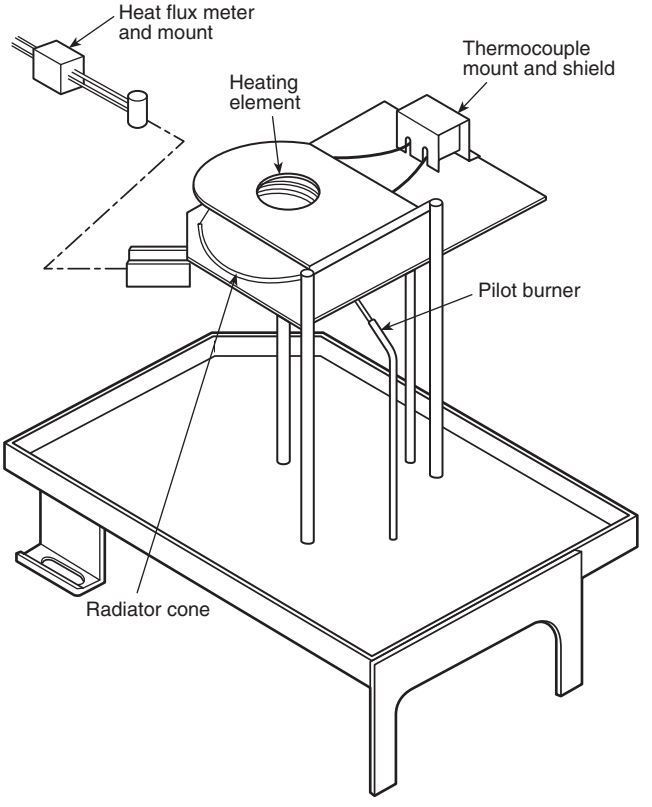

FIGURE 4.3.1.1 Typical Framework for Support of Radiator Cone, Specimen Holder, and Flux Meter.

mounted diametrically opposite, in contact with, but not welded to, the heating element, and positioned at one-third the distance from the top surface of the cone.

4.3.1.4* Heater Temperature.

4.3.1.4.1 The temperature at the heater shall be controlled and shall be held steady to ±2°C.

4.3.1.4.2 The temperature controller for the radiator cone shall be of the proportional, integral, and derivative type 3-term controller with thyristor stack fast-cycle or phase-angle control of not less than 10 A maximum rating.

4.3.1.4.3 Capacity for adjustment of integral time between 10 seconds and 50 seconds and differential time between 25 seconds and 30 seconds shall be provided to permit matching with the response characteristics of the heater.

4.3.1.4.4 The temperature input range shall be 0°C to 1000°C.

4.3.1.4.5 Automatic cold junction compensation of the thermocouple shall be provided.

4.3.1.4.6 Alternate devices that give equivalent results shall be permitted to be accepted.

4.3.2 Framework for Radiator Cone.

4.3.2.1 Vertical Rods. The radiator cone shall be secured to the vertical rods of the support framework and shall be located so that the lower rim of the radiator cone shade is 25 mm ± 1 mm above the upper surface of the specimen when oriented in the horizontal position as shown in Figure 4.3.2.1(a) and Figure 4.3.2.1(b).

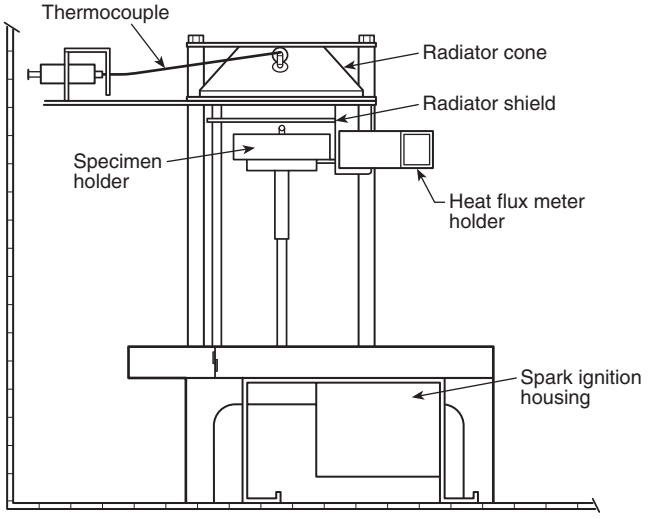

FIGURE 4.3.2.1(a) Typical Arrangement of Radiator Cone, Specimen Holder, and Radiator Shield (side view).

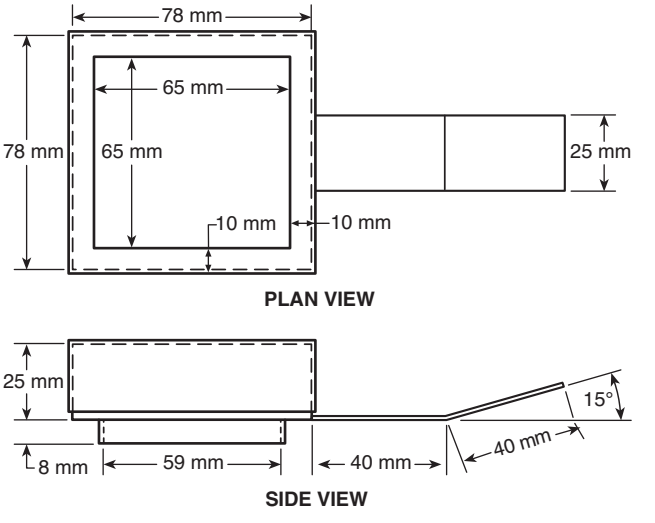

FIGURE 4.3.2.1(b) Specimen Holder.

4.3.2.2 Base. The base of the specimen holder shall contain a height adjustment device to ensure a consistent distance between the radiator cone and the specimen surface.

4.3.3 Radiator Shield.

4.3.3.1 Construction. The cone heater shall be provided with a removable radiator shield to protect the specimen from the irradiance prior to the start of the test.

4.3.3.1.1 The radiator shield shall be made of noncombustible material with a total thickness not to exceed 12 mm.

4.3.3.1.2 The radiator shield shall comply with one of the following:

(1) A water-cooled radiator shield coated with a durable matte black finish of surface emissivity, $e = 0.95 \pm 0.05$
(2) A radiator shield with a metallic reflective top surface to minimize radiation transfer, but not water cooled

Copyright National Fire Protection Association
Provided by IHS under license with NFPA
No reproduction or networking permitted without license from IHS
Not for Resale

(3) A radiator shield with a ceramic, nonmetallic surface that minimizes radiation transfer to the specimen surface, but not water cooled

4.3.3.2* Mobility. The radiator shield shall be equipped with a handle or other means for quick insertion and removal.

4.3.3.3 Stability. The cone heater base plate shall be equipped with the means for holding the radiator shield in position and allowing its quick removal.

4.3.4 Heat Flux Meter.

4.3.4.1* Target.

4.3.4.1.1 The heat flux meter shall be of the foil (Gardon) or thermopile (Schmidt-Boelter) type with a design range of at least 50 kW/m^2.

4.3.4.1.2 The target receiving the radiation shall have a flat, circular face of 10 mm ± 1 mm diameter, coated with a durable matte black finish as shown in Figure 4.3.2.1(a).

4.3.4.1.3 The target shall be water cooled.

4.3.4.2* Recorder. The heat flux meter shall be connected directly to a recorder or data acquisition unit so that it is capable, when calibrated, of recording heat fluxes of 25 kW/m^2 and 50 kW/m^2 to an accuracy of ±1 kW/m^2.

4.3.4.3 Calibration. The heat flux meter system shall be calibrated by comparing its response with that of a primary reference standard, when exposed to irradiances of 25 kW/m^2 and 50 kW/m^2 ± 1 kW/m^2, averaged over the 10 mm ± 1 mm diameter area of the heat flux meter. *(See Section B.1.)*

4.3.5 Specimen Holders.

4.3.5.1 Refractory Fiber Blanket. The specimen holder base shall be lined with a low-density (nominal 65 kg/m^3) refractory fiber blanket with a minimum thickness of 10 mm as shown in Figure 4.3.5.1.

4.3.5.2 Application. Wrapped specimens less than 25 mm thick backed by at least one sheet of noncombustible insulating board shall be permitted to be used without a layer of refractory mineral fiber blanket if necessary to accommodate their thickness as described in 6.7.3.

4.3.5.3 Retainer Frame and Wire Grid.

4.3.5.3.1* A retainer frame and wire grid shall be used for all tests.

4.3.5.3.2 The wire grid shall be 75 mm ± 1 mm square with 20 mm ± 0.5 mm square holes constructed from 2 mm ± 0.2 mm stainless steel rod welded at all intersections.

4.3.6* Pilot Burner.

4.3.6.1 Flame. The flame from the single-flame burner shall have a length of 30 mm ± 5 mm and shall be positioned horizontally 10 mm ± 1 mm above the top face of the specimen as shown in Figure 4.3.6.1(a) and Figure 4.3.6.1(b).

4.3.6.2 Color. The color of the flame shall be blue with a yellow tip.

4.3.6.3 Location. The tip of the burner shall reach the edge of the specimen itself as shown in Figure 4.3.6.1(b).

4.4 Gas Supply.

4.4.1 A mixture of propane of at least 95 percent purity and at a pressure of 3.5 kPa ± 1 kPa and air at a pressure of 170 kPa ± 30 kPa shall be supplied to the burner.

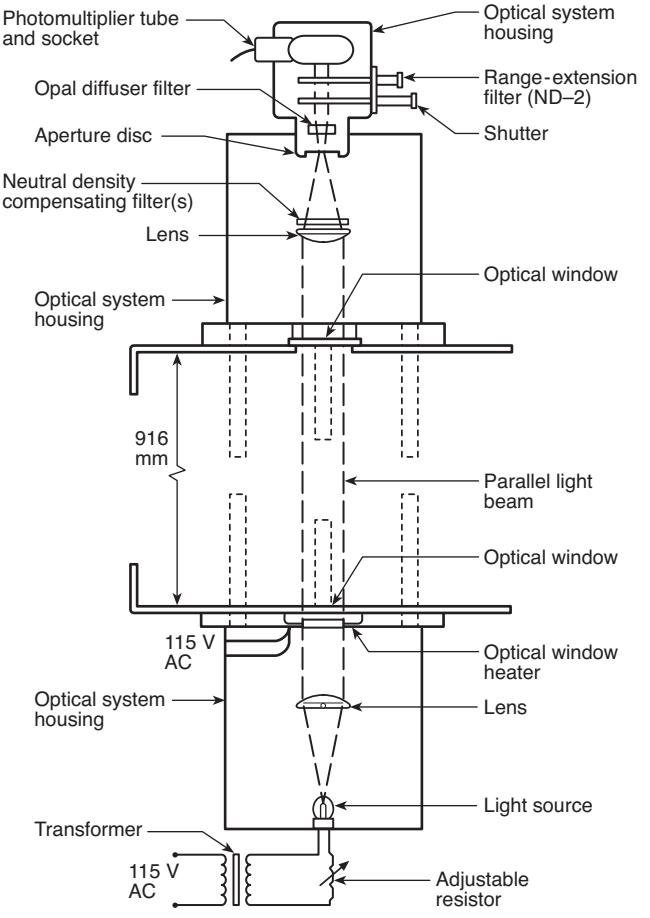

FIGURE 4.3.5.1 Photometric System.

4.4.2 Each gas shall be fed to the point at which they are mixed and supplied to the burner.

4.4.3 Needle valves and calibrated flowmeters shall be permitted to be used for controlling gas flows.

4.4.4 The flowmeter for the propane supply shall be capable of measuring 50 cm^3/min flow rates.

4.4.5 For air a value of 500 cm^3/min, alternate devices shown to give equivalent results shall also be permitted to be used.

4.5 Photometric System.

4.5.1 General.

4.5.1.1 Construction. The photometric system shall consist of a light source and lens in a lighttight housing mounted below the optical window in the floor of the cabinet and a photodetector with lens, filters, and a shutter in a lighttight housing above the optical window in the top of the chamber.

4.5.1.2 Equipment.

4.5.1.2.1 The system shall be as shown in Figure 4.5.1.2.1.

4.5.1.2.2 Equipment shall be provided to control the output of the light source and to measure the amount of light falling on the photodetector.

Copyright National Fire Protection Association
Provided by IHS under license with NFPA
No reproduction or networking permitted without license from IHS
Not for Resale

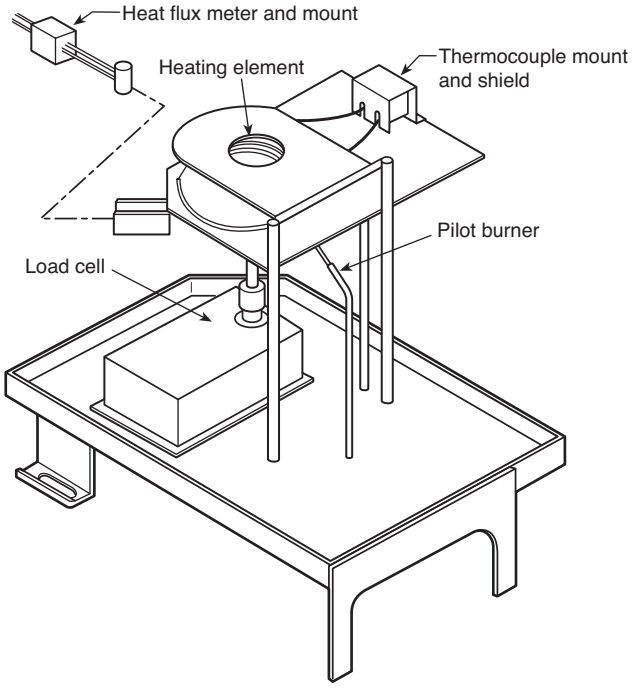

FIGURE 4.3.6.1(a) Typical Framework for Support of Radiator Cone, Specimen, Flux Meter, and Load Cell.

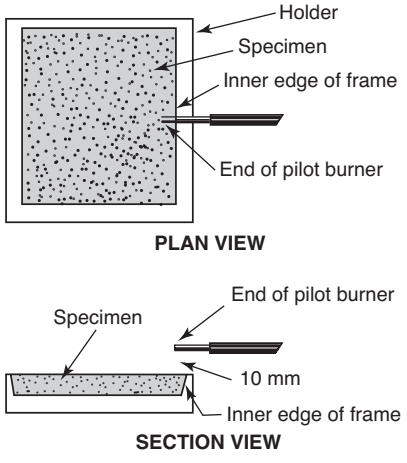

FIGURE 4.3.6.1(b) Detailed Location of Pilot Burner.

4.5.2 Light Source.

4.5.2.1 The light source shall be a 6.5 V incandescent lamp.

4.5.2.2 Power for the lamp shall be provided by a transformer producing 6.5 V and a rheostat so that the voltage across the lamp as determined by an ac voltmeter is maintained at 4 V ± 0.2 V rms.

4.5.2.3 The lamp shall be mounted in the lower lighttight box, and a lens to provide a collimated light beam of 51 mm diameter passing toward and through the optical window on the floor of the chamber shall be mounted, with provision for adjustment, to control the collimated beam in direction and diameter.

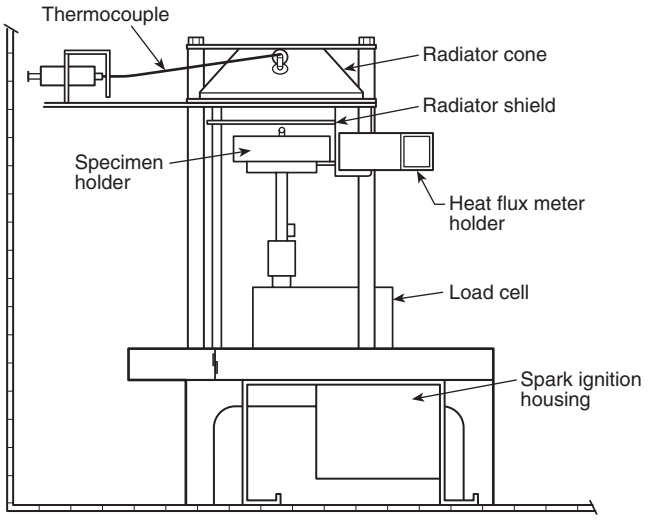

FIGURE 4.5.1.2.1 Typical Arrangement of Radiator Cone, Specimen Holder, and Radiator Shield (side view) with Load Cell for Mass Optical Density Determination.

4.5.2.4 The housing shall be provided with a cover to allow access for adjustments to be made to the position of the lens.

4.5.3 Photodetector.

4.5.3.1* Equipment. The light-measuring device system shall consist of a photomultiplier tube connected to a multirange amplifier coupled to a recording device or data acquisition unit as described in 4.8.6.

4.5.3.1.1 This system shall be capable of continuously measuring relative light intensity against time as percentage transmission over at least five orders of magnitude, with an S-4 spectral sensitivity response similar to that of human vision and a dark current less than 109 A.

4.5.3.1.2 The system shall have a linear response with respect to transmittance and an accuracy of better than ±3 percent of the maximum reading on any range.

4.5.3.1.3 For selection of photomultiplier tubes, as applicable, the minimum sensitivity shall allow a 100 percent reading to be obtained with a 0.5 neutral density filter and an ND-2 range-extension filter as described in 4.5.3.2.2 in the light path.

4.5.3.1.4 Provision shall be made for adjusting the reading of the instrument under given conditions over the full range of any scale.

4.5.3.2 Photomultiplier Tube. The photomultiplier tube shall be mounted in the upper section of the photodetector housing.

4.5.3.2.1 Below the tube there shall be an assembly that provides for the rapid positioning of a filter and of a shutter, in or out of the path of the collimated light beam.

4.5.3.2.2 The filter, referred to as the range-extension filter (ND-2), shall be a glass neutral density filter of nominal optical density 2.

4.5.3.2.3 When in the closed position, the shutter shall prevent all light in the test chamber from reaching the photomultiplier tube.

Copyright National Fire Protection Association
Provided by IHS under license with NFPA
No reproduction or networking permitted without license from IHS
Not for Resale

4.5.3.2.4 An opal diffuser filter shall be permanently mounted below the shutter.

4.5.3.3 Lens. The lower part of the housing shall support a 51 mm ± 1 mm diameter lens capable of being adjusted, so that the collimated beam is focused to form a small intense spot of light at the disc aperture between the upper and lower parts of the housing.

4.5.3.3.1 Above the lens, there shall be a mount for supporting one or more compensating filters from a set of nine gelatin neutral density filters, with optical density varying from 0.1 to 0.9 in increments of 0.1.

4.5.3.3.2 The housing shall be provided with a cover to allow access for making adjustments to the position of the lens and for inserting or removing filters.

4.5.3.4* Filter Calibration. A neutral density filter with a nominal optical density of 3.0, large enough to cover the lower optical window, the actual optical density having been determined by calibration, shall be available for calibrating the photometric system.

4.5.4 Additional Equipment.

4.5.4.1 Template. A template for checking the collimated light beam shall consist of an opaque disc marked with a concentric ring of 51 mm ± 1 mm diameter.

4.5.4.1.1 The template shall be capable of fitting snugly between the support pillars.

4.5.4.1.2 The template shall be capable of being attached to and centered on the underside of the upper optical window in the chamber.

4.5.4.2 Window Covering. A piece of white cloth or paper tissue, or a neutral density filter of sufficient size to completely cover the lower optical window of the chamber and that is capable of transmitting an amount of light to give a midscale reading of the photometric system when switched to the scale with a range of 1 percent transmission shall be available for calibrating the range-extension filter.

4.5.4.3 Light Blocking. A piece of opaque material sufficiently large enough to cover the lower optical window shall be available for blocking the light from the light source entering the chamber.

4.6* Chamber Leakage. With the specified items of equipment assembled and ready for testing, the chamber shall comply with the requirements of the leakage rate test given in Section 7.6.

4.7* Cleaning Materials. The optical system windows, viewing windows, chamber walls, and specimen holders shall be cleaned regularly.

4.7.1* Optical System Windows. The exposed surfaces of the glass separating the photodetector and light-source housings from the interior of the chamber shall be cleaned after each test.

4.7.2 Viewing Window. The viewing window shall be cleaned to allow the chamber interior to be viewed during testing.

4.7.3* Chamber Walls. The chamber walls shall be cleaned to prevent excessive build-up of smoke products.

4.7.4 Specimen Holders. Specimen holders and horizontal rods securing the holder position shall be cleaned by removing any charred residues to prevent contamination of subsequent specimens.

4.8 Ancillary Equipment.

4.8.1 Balance. The balance shall have a capacity exceeding the mass of the specimen and shall be readable and accurate to 0.5 percent of the specimen mass.

4.8.2 Timing Device. A timing device capable of recording elapsed time to the nearest second over a period of at least 1 hour, with an accuracy of 1 second in 1 hour, shall be used for timing operations and observations.

4.8.3 Linear Measuring Devices. Rules, calipers, gauges, or other devices shall be used for checking all dimensions specified with given tolerances.

4.8.4 Preheating of Chamber Heater. Preheating of the chamber to reach a stabilized temperature shall be permitted.

4.8.5 Protective Equipment. Protective clothing such as gloves, goggles, and respirators, and handling equipment such as tongs, shall always be available and shall be used when the type of sample being tested demands them.

4.8.6 Data Acquisition.

4.8.6.1 The recorder or data acquisition unit used shall be capable of continuously recording the millivolt output of the photodetector to an accuracy of better than 0.5 percent of full-range deflection as described in 4.5.3.

4.8.6.2 The device used shall also be capable of recording the heat flux meter output to the required accuracy as described in 4.3.4.2.

4.8.6.3 If a data acquisition unit is used, the data collection intervals shall be 5 seconds or less.

4.8.6.4 If a recorder is used, the recording chart drive shall be used at a minimum chart speed of 10 mm/min.

4.8.7* Thermometer. A thermometer or a Type K thermocouple shall be available and shall be capable of measuring temperature over the range 20°C to 100°C to an accuracy of ±0.5°C.

4.8.8 Water Circulating Device. A device for water circulation shall be provided to cool the heat flux meter.

Chapter 5 Test Environment

5.1 Light Interference. The test apparatus shall be protected from direct sunlight or any strong light source, to avoid the possibility of spurious light readings.

5.2 Product of Combustion Venting.

5.2.1 Exhaust vents shall be provided for removing smoke and gases from the area of operation.

5.2.2 Precautions shall be taken to prevent exposure of the operator to such gases, particularly during the removal of specimens from the chamber or when cleaning the apparatus.

5.2.3 The exhaust system shall be checked for proper operation complying with Section 7.11 and Table 7.10.1 before testing.

5.3* Operator Safety.

5.3.1 The operator shall use heavy gloves, safety tongs, or other protection for removal of the specimen holder.

5.3.2 Care shall be taken not to touch the spark ignitor.

Copyright National Fire Protection Association
Provided by IHS under license with NFPA
No reproduction or networking permitted without license from IHS
Not for Resale

5.3.3 Ejection of hot material or sharp fragments from some kinds of specimens when irradiated shall be taken into account.

Chapter 6 Test Specimen

6.1 Suitability of Sample for Testing.

6.1.1 Method.

6.1.1.1 The test method shall be intended for essentially flat samples only.

6.1.1.2 Essentially flat surfaces shall be those where the irregularity from a plane does not exceed ±1 mm.

6.1.2 Sensitivity. The results of this test method shall be sensitive to variations in surface characteristics, thickness of individual layers, overall thickness, mass, and composition.

6.2 Sample Face. If the two faces of samples submitted for evaluation by this method are different, both faces shall be evaluated if it is possible that both faces are exposed to fire when in use.

6.3* Number of Specimens.

6.3.1 A minimum of six specimens shall be tested, so that three specimens are tested at each one of the two required conditions.

6.3.2 Unless otherwise specified by the test requester, the standard exposure conditions shall be as follows:

(1) Flaming at an irradiance of 25 kW/m^2
(2) Flaming at an irradiance of 50 kW/m^2

6.4 Additional Specimens.

6.4.1 An additional number of specimens, as specified in Section 6.3, shall be used for each face in accordance with the requirements of Section 6.2.

6.4.2 An additional six specimens (three specimens per mode to be tested) shall be held in reserve, in case they are required by the conditions specified in 9.9.2.

6.5 Size of Specimens.

6.5.1 Size. The specimens shall be square with sides 75 mm.

6.5.2* Thickness.

6.5.2.1 Whenever possible, test samples shall be in their end-use thickness.

6.5.2.2 Samples used with a thickness of 25 mm or less shall be evaluated at their full thickness.

6.5.2.3 If no information on sample thickness is available, materials shall be permitted to be tested at a thickness of 1.0 mm, unless otherwise specified in the material or performance standard or specification.

6.5.2.4 Samples with a thickness greater than 25 mm shall be cut to give a specimen thickness of 25 mm in such a way that the original (uncut) face is evaluated.

6.5.2.5 Samples of multilayer materials, products, or assemblies with a thickness greater than 25 mm, consisting of core material(s) with facings of different materials, shall be prepared according to 6.5.2.4 as described in 6.6.2.

6.6 Specimen Preparation.

6.6.1 The specimen shall be representative of the material, product, or assembly and shall be prepared in accordance with the procedures described in 6.6.2 and 6.6.4.

6.6.1.1 The specimens shall be cut, sawn, molded, or stamped from identical sample areas of the material, product, or assembly.

6.6.1.2 Records shall be kept of specimens' thicknesses and, if required, their masses.

6.6.2 If flat sections of the same thickness and composition are tested in place of curved, molded, or specialty parts, this difference shall be stated in the test report.

6.6.3 Any substrate or core materials for the specimens shall be the same as those used in practice.

6.6.4 When coatings, including paints and adhesives, are tested with the substrate or core as used in practice, specimens shall be prepared following 6.6.1, and in such cases the method of application of the coating, number of coats, and type of substrate shall be included in the test report.

6.7 Wrapping of Specimens.

6.7.1 All specimens shall be covered across the back, along the edges, and over the front surface periphery leaving a central exposed specimen area of 65 mm ± 5 mm × 65 mm ± 5 mm, with a single sheet of aluminum foil that is 0.04 mm ± 0.005 mm thick with the dull side in contact with the specimen.

6.7.1.1 Care shall be taken not to puncture the foil or to introduce unnecessary wrinkles during the wrapping operation.

6.7.1.2 The foil shall be folded so as to minimize losses of any molten material at the bottom of the holder.

6.7.1.3 After mounting the specimen into its holder, any excess foil along the front edges shall be trimmed off.

6.7.2 All wrapped specimens shall be backed with one or more sheets of noncombustible insulating board of an oven-dry density of 850 kg/m^3 ± 100 kg/m^3 and a nominal thickness of 12.5 mm to ensure that the top edges of the specimen are pressed against the retaining lips of the specimen holder.

6.7.3 Wrapped specimens less than 25 mm thick shall be backed with at least one sheet of noncombustible board with or without a layer of refractory mineral fiber blanket underneath to accommodate a wider variety of specimen thicknesses as described in 4.3.5.2.

6.7.4 In the case of resilient materials, products, or assemblies, each specimen shall be installed in its aluminum foil wrapper in the holder in such a way that the exposed surface lies flush with the inside face of the opening of the specimen holder.

6.7.5 Specimens with uneven exposed surfaces shall not protrude beyond the plane of the opening of the specimen holder.

6.7.6 When thin impermeable specimens, such as thermoplastic films, swell during the test due to gases trapped between the film and the backing, the specimens shall be maintained essentially flat by making two or three cuts 20 mm to 40 mm long in the film to act as vents.

Copyright National Fire Protection Association
Provided by IHS under license with NFPA
No reproduction or networking permitted without license from IHS
Not for Resale

Chapter 7 Setup, Calibration, and Maintenance

7.1* Setup and Calibration Procedures. The test apparatus shall be assembled, connected to the services and control devices as specified in Chapter 8, and checked for compliance with the procedures as noted in Section 7.2 through Section 7.11 and for the operation of the various systems, including the electrical connections.

7.2 Alignment of Photometric System.

7.2.1 General.

7.2.1.1 The setup procedure shall be conducted as detailed in 7.2.2 and 7.2.3 in the initial setup of the apparatus, after the replacement of the light source or after the occurrence of some accidental misalignment.

7.2.1.2 The procedure for selecting the compensating filter(s) shall be followed after each setup procedure as described in Section 7.3.

7.2.2 Beam Collimation.

7.2.2.1 The optical platforms shall be checked for rigidity.

7.2.2.1.1 The opaque-disc template shall be attached to the lower face of the upper optical window with the marked ring downwards and centered on the window.

7.2.2.1.2 The light source shall be switched on and its projected image adjusted on the template, so that the light beam completely fills the 51 mm diameter ring with no more light outside the ring than is necessary to satisfy this requirement.

7.2.2.2* Adjustments shall be made by removing the cover to the light source enclosure, releasing the lower lens mount fixings, and repositioning the lens mount, so that the light pattern on the template is centered and of the correct size.

7.2.2.3* The lens mount shall be reaffixed and the cover replaced, ensuring that the test cabinet has been resealed.

7.2.2.4 The template shall be removed from the upper optical window.

7.2.3 Beam Focusing.

7.2.3.1 The cover to the housing on top of the test chamber shall be opened, the compensating filter holder shall be removed, and the lens mount shall be slackened.

7.2.3.2 With the photodetector system switched off and the light source switched on, the lens mount shall be adjusted for focusing and alignment, so that the converging beam forms a small intense spot of light on the aperture to the photomultiplier tube housing.

7.2.3.3 The lens mount shall be tightened, the beam focusing adjustment shall be checked, the compensating filter holder shall be replaced, and the enclosure cover shall be closed and sealed.

7.3* Selection of Compensating Filter(s).

7.3.1 The faces of both optical windows inside the test chamber shall be cleaned.

7.3.2 The photometric system shall be switched on with the range-extension filter in the light path, the shutter open (if applicable), and the multirange meter set to the range capable of recording 100 percent light transmission.

7.3.3 The control for adjusting the reading of the instrument shall be operated to determine whether 100 percent light transmission is achievable. If 100 percent is achievable, no change in the compensating filter shall be required; if 100 percent is not achievable, another compensating filter shall be used to satisfy this requirement.

7.4 Linearity Check.

7.4.1 The photometric system shall be switched on with the range-extension filter in the light path and the shutter closed.

7.4.1.1 The zeroing device shall be adjusted, with the instrument range switched to the most sensitive range, to give a reading of 0 percent light transmission with the instrument range switched to a full-scale reading of 100 percent transmission.

7.4.1.2 The instrument shall be switched to the other ranges to determine that the recorded transmission remains 0 percent.

7.4.2 The calibrated filter having a nominal optical density of 3.0 shall be placed in the light path over the lower optical window, the shutter shall be opened, and the percentage of transmission shall be measured.

7.4.3 The difference between the observed reading and the calibrated value, when expressed as a percentage of the average of the two values, shall be within 5 percent.

7.5 Calibration of Range-Extension Filter.

7.5.1 The test apparatus shall be brought to an incident heating flux of 25 kW/m^2 as described in Section 9.1 with the chamber wall temperature remaining steady at 40°C ± 5°C.

7.5.2 The photometric system with the range-extension filter in the light path and with the shutter open shall be switched on, and the amplifier shall be switched to its 100 percent transmission range.

7.5.3 The white cloth, sheets of tissue, or filter with an optical density of about 2.5 shall be placed over the lower optical window and the amplifier switched to the 1 percent transmission range as described in 4.5.3.

7.5.4 The reading shall be set to 0.50 percent by adjusting the instrument.

7.5.5 Without disturbing the cloth, tissue, or filter, the amplifier shall be reset to the 100 percent transmission, and the ND-2 range-extension filter shall be withdrawn from the light path.

7.5.6 The transmission reading, T_s, shall be recorded and used to determine the value of the correction factor, C_f, from Table 7.5.6 for readings obtained when the range-extension filter is not in the light path.

7.5.7 For materials, products, or assemblies having known performance, the calibration procedure in 7.5.1 through 7.5.6 shall not be needed unless the optical density is greater than 3.

7.6 Chamber Leakage Rate Test.

7.6.1 The airtightness of the test chamber shall be measured on each occasion of use (with the door, vents, and spare gas sampling pipes closed) by introducing compressed air into the test chamber through one of the gas sampling pipes (or other compressed air inlet) until the pressure recorded on the manometer is over 0.76 kPa and then shutting off the supply.

--`,,```,,,,````-`-`,,`,,`,`,,`---

Copyright National Fire Protection Association
Provided by IHS under license with NFPA
No reproduction or networking permitted without license from IHS
Not for Resale

Table 7.5.6 Correction Factors with Neutral Density Filter (ND-2) Removed

Meter Indication (T_s)	Correction Factor (C_f)	Optical Density of Neutral Density Filter
31	−27.4	1.79
32	−25.6	1.81
33	−23.8	1.82
34	−22.1	1.83
35	−20.4	1.845
36	−18.8	1.86
37	−17.3	1.87
38	−15.7	1.88
39	−14.2	1.89
40	−12.8	1.90
41	−11.4	1.91
42	−10.0	1.92
43	−8.6	1.93
44	−7.3	1.94
45	−6.0	1.95
46	−4.8	1.96
47	−3.5	1.97
48	−2.3	1.98
49	−1.2	1.99
50	0.0	2.00
51	+1.1	2.01
52	+2.2	2.02
53	+3.3	2.025
54	+4.4	2.03
55	+5.5	2.04
56	+6.5	2.05
57	+7.5	2.06
58	+8.5	2.064
59	+9.5	2.07
60	+10.5	2.08
61	+11.4	2.086
62	+12.3	2.09
63	+13.2	2.10
64	+14.2	2.107
65	+15.0	2.114
66	+15.9	2.12
67	+16.8	2.13
68	+17.6	2.135
69	+18.5	2.14
70	+19.3	2.146

7.6.2 The airtightness of the test chamber shall be such that the time taken for the recorded pressure to drop from 0.76 kPa to 0.50 kPa, as determined by using the timing device, shall be not less than 5.0 minutes.

7.7* Burner Calibration. Set the propane and air flows to obtain the flame dimensions, color, and positioning required in 4.3.6 as described in Section 4.4.

7.8 Radiator Cone Calibration.

7.8.1 Cleaning. The test apparatus shall be cleaned of any residues left from previous tests.

7.8.1.1 When a cone calibration is to follow soon after a test, the chamber shall be flushed with air for 2 minutes (with the door shut and the exhaust and inlet vents open).

7.8.1.2 The heat flux meter shall be mounted as specified in 4.3.2.1 and shall be connected to the electrical and water services.

7.8.2 Burner Ignition. The burner shall not be ignited during this calibration.

7.8.3 Temperature. The test apparatus shall be brought to its normal operating condition as described in Section 9.1, with the chamber wall temperature remaining steady as described in 9.1.3.3 and the radiator shield moved away from the radiator cone.

7.8.4* Water Supply. With the chamber door closed, the inlet vent open, and the exhaust vent closed, water shall be supplied to the heat flux meter to cool the heat flux meter body.

7.8.4.1 The heat flux meter output shall be monitored to determine when thermal equilibrium has been reached.

7.8.4.2 The cone shall then be adjusted, as necessary, to give a steady millivolt reading corresponding to the calibrated value equivalent to an irradiance of 25 kW/m^2, or 50 kW/m^2, as required.

7.8.4.3 If the door is opened for any reason during calibration, at least 10 minutes shall be allowed after closing the door for thermal equilibrium to be reached before taking the final millivolt reading.

7.8.5 Repeat Procedure. The procedure in 7.8.4 shall be repeated as necessary to calibrate the equipment in three positions — at the center and at 25 mm ± 1 mm on each side of the center.

7.8.6 Radiator Shield.

7.8.6.1 The radiator shield shall be returned to the position below the cone, and the heat flux meter shall be removed from the test chamber so that tests on specimens can proceed immediately.

7.8.6.2 Water shall be circulated through the heat flux meter until the meter is cool enough for the protective cap to be replaced without melting or distortion.

7.9* Cleaning. The inside walls of the test chamber and the supporting framework for the cone and specimen holders shall be cleaned using materials as described in Section 4.7, whenever periodic visual inspection indicates the need.

7.10 Frequency of Checking and Calibrating Procedures.

7.10.1* Regular checking and calibration shall be undertaken in accordance with Table 7.10.1.

7.10.2 The relevant setup procedure shall be followed after any part of the equipment has been renewed or repaired.

7.11* Total System.

7.11.1 The total system shall be checked by testing a material or product with repeatable results.

7.11.2 A record of the test results shall be maintained; if erratic values are observed, any instrumental or operational deficiencies shall be identified and corrected.

Copyright National Fire Protection Association
Provided by IHS under license with NFPA
No reproduction or networking permitted without license from IHS
Not for Resale

Table 7.10.1 Frequency of Checks and Calibrations

Item of Equipment	Maximum Interval Between Checks and Calibrations	Procedure (Section Reference)
Test chamber interior	Before testing every specimen and before any calibration	7.9
Radiator cone	Once every test day and when renewed or replaced	7.8
Chamber leakage rate	Once every test day and when new seals or safety blow-out panel are fitted	7.6
Heat flux meter	Every 3 months and when cleaned or recoated	4.3.4.3
Photometric system:		
Calibration	Before testing every specimen	9.3
Alignment	Every 6 months and when light source is replaced or when damage is incurred	7.2
Compensating filters	Every 6 months and when transmission through windows deteriorates	7.3
Linearity	Every 6 months and when transmission through windows deteriorates	7.4
Range-extension filter	Every 6 months	7.5
Total system	Every month or after the system has been used for more than 100 tests	7.11

Chapter 8 Conditioning

8.1 Pre-Test.

8.1.1 Prior to testing, the specimens shall be conditioned to constant mass in an atmosphere at a temperature of 23°C ± 3°C and a relative humidity of 50 ± 10 percent.

8.1.2 Constant mass shall be considered to have been reached when two successive weighing operations carried out at an interval of 24 hours do not differ by more than 0.1 percent of the mass of the test piece, or 0.1 g, whichever is greater.

8.1.3 The specimen shall be tested within 10 minutes of removal from the conditioning atmosphere, if the test room conditions differ from the above.

8.2* Conditioning. While in the conditioning chamber, specimens shall be supported in racks so that air has access to all surfaces.

Chapter 9 Test Procedure

9.1 Initial Conditions.

9.1.1 The mass of each test specimen wrapped in aluminum foil shall be recorded before placing it inside the specimen holder, to generate an initial mass, m_i (in grams).

9.1.2 The test chamber shall be prepared according to the requirements of Chapter 7, with the radiator cone set at an irradiance of 25 kW/m^2 or 50 kW/m^2.

9.1.3* If a test has just been completed, the test chamber shall be flushed with air with the test chamber door closed and the exhaust and inlet vents open, until it is completely clear of smoke.

9.1.3.1 The inside of the cabinet shall be inspected and the walls and the supporting framework shall be cleaned wherever necessary, as described in Section 7.9.

9.1.3.2 The faces of the optical windows inside the chamber shall be cleaned before each test.

9.1.3.3 The apparatus shall be allowed to stabilize until the chamber wall temperature is within the range of 40°C ± 5°C for tests with the radiator cone at 25 kW/m^2 or within the range 55°C ± 5°C for tests with the radiator cone at 50 kW/m^2.

9.1.3.4 The inlet valve shall be closed.

9.2 Tests with Pilot Flame.

9.2.1 For tests with the pilot flame, with the burner in its correct position, the gas and air supplies shall be turned on, and the burner shall be ignited.

Copyright National Fire Protection Association
Provided by IHS under license with NFPA
No reproduction or networking permitted without license from IHS
Not for Resale

9.2.1.1 The flow rates shall be checked.

9.2.1.2 If necessary, the flow rates shall be adjusted to ensure that they are in accordance with Section 7.7.

9.2.2 If the pilot flame is extinguished by gaseous effluent during a test and fails to reignite within 10 seconds, the gas supply to the pilot burner shall be switched off immediately.

9.3 Preparation of Photometric System. The photometric system shall be prepared as follows:

(1) Set the recorder to zero and then open the shutter to set the full-scale 100 percent transmission reading.
(2) Close the shutters and check and reset the recorder to zero, if necessary, using the most sensitive 0.1 percent range.
(3) Recheck the 100 percent setting.
(4) Repeat the sequence of operations until accurate 100 percent and zero readings are obtained on the amplifier and recorder, or data acquisition unit, when the shutters are opened and closed.

9.4 Loading Specimen.

9.4.1 A wrapped specimen prepared in accordance with Sections 6.3 and 6.4 with its insulating board as noted in 6.7.2 shall be placed in its holder.

9.4.1.1 The specimen holder and specimen shall be placed on the supporting framework below the radiator cone.

9.4.1.2 The test chamber door shall be closed immediately.

9.4.2 The test shall be started by removing the radiator shield from below the cone and simultaneously starting the recording chart drive or data acquisition unit and closing the inlet vent.

9.4.3 If preliminary tests indicate that the pilot flame is extinguished before the radiator shield is removed, then it shall be necessary to remedy this problem with the equipment before continuing with the test.

9.5 Recording of Light Transmission.

9.5.1 The percentage of light transmission and the corresponding time shall be recorded continuously from the start of the test; that is, from the time the radiator shield was removed.

9.5.2 The range of the photodetector amplifier system shall be switched to the next decade when required so that readings less than 10 percent of full-scale deflection are avoided.

9.5.3 If the light transmission falls below 0.01 percent, the observation window in the chamber door shall be covered and the range-extension filter shall be withdrawn from the light path.

9.5.4 The range shall be switched to a full scale of 1 percent to give an effective full-scale range of 0.01 percent.

9.6* Observations. Any particular burning characteristics of the specimens, such as delamination, intumescence, shrinkage, melting, dripping, collapse, occurrence of pool fire under the test specimen, or any other event of special interest shall be recorded, and the time at which the particular behavior occurs including the time to ignition and duration of flaming also shall be recorded.

9.6.1 The smoke characteristics, such as color and the nature of the settled particulate matter, also shall be recorded.

9.6.2 All times shall be reported from the moment the test was started as described in 9.4.2.

9.7 Termination of Test.

9.7.1 The test shall be conducted for a period of 10 minutes.

9.7.1.1 The test shall be permitted to be conducted for periods in excess of 10 minutes when minimum light transmittance values have not been reached during a 10-minute exposure.

9.7.1.2 If the period exceeds 10 minutes, the test time shall be reported.

9.7.2* The burner shall be extinguished if the pilot flame has been used.

9.7.3 The radiator shield shall be moved below the cone.

9.7.4 The exhaust fan shall be switched on, and when the manometer indicates a small negative pressure, the inlet vent shall be opened and shall continue exhausting until a maximum value of light transmission is recorded, with the most sensitive range selected, and noted as the "clear beam" reading, T_c, for use in correcting for deposits on the optical windows.

9.8 Specimen Mass.

9.8.1 At the conclusion of each test, the final specimen mass, m_f (in grams), shall be determined after removal from the specimen holder.

9.8.2 The aluminum foil in which the specimen had been wrapped during the test for determining the mass shall be included.

9.9 Repeat Tests.

9.9.1 The percentage of light transmission of two sets of three specimens for each sample, one set for each mode from among the four standard exposure conditions shown in 9.2.2, shall be measured.

9.9.2 The following default exposure conditions, unless specified otherwise by the test requester, shall be those with a pilot flame:

(1) Mode 1: Irradiance — 25 kW/m^2 with pilot flame
(2) Mode 2: Irradiance — 50 kW/m^2 with pilot flame
(3) Mode 3: Irradiance — 25 kW/m^2 without pilot flame
(4) Mode 4: Irradiance — 50 kW/m^2 without pilot flame

9.9.3 If during a test, one or more of the three replicate specimens show any of the following behaviors, an additional specimen of the identical preconditioned sample shall be tested in the test mode in which the unusual behavior(s) occurred.

(1) Self-ignition of a specimen occurs in the nonflaming mode.
(2)*A specimen is displaced from the zone of controlled irradiance so as to touch the pilot burner or the pilot flame.
(3) The pilot flame is extinguished (even for a short period of time) in the flaming mode. The test results of a specimen that does not cease flaming after the pilot flame goes out shall not be considered valid, and additional tests shall not be required.
(4) Molten material overflows the specimen holder.

9.9.4 A maximum of six specimens shall be allowed to be tested.

9.9.5 Data obtained from the improper tests noted in 9.9.3(1) through (4) shall not be incorporated in the averaged data, but the occurrence shall be reported.

9.9.6 The test method shall not be suitable if three or more of the specimens tested show any of the characteristics in 9.9.3(1) through (4).

Copyright National Fire Protection Association
Provided by IHS under license with NFPA
No reproduction or networking permitted without license from IHS
Not for Resale

9.9.7 For each individual specimen, the percentage value of light transmission shall be determined, and the specific optical density from this value shall be calculated, as given in Chapter 10.

9.9.8 If the value of D_s at 10 minutes for an individual specimen differs from the average value by more than 50 percent of that average for no apparent reason, for the set of three specimens of which it is part, an additional set of three specimens shall be tested from the same sample in the same mode, and the average of all six results obtained shall be recorded.

Chapter 10 Calculations

10.1 Specific Optical Density, D_s.

10.1.1 For each specimen, the set of continuous recorded data of light transmission against time shall be used and the results at 1.5 minutes, 4.0 minutes, and 10.0 minutes shall be converted to specific optical density, D_s, by using the following equation, where $T\%$ is a value of the percent light transmittance, taken from the continuous record.

$$D_s = 132 \log_{10} \frac{100}{T\%}$$

10.1.2 The factor 132 shall be derived from the physical characteristics of the chamber by using the following equation:

$$\frac{V}{A \times L} = 132$$

where:
V = volume of the chamber
A = exposed area of the specimen
L = length of the light path

10.1.3 A correction factor, C_f, shall be added to the value of D_s, as determined in 10.1.1.

10.1.3.1 This correction factor shall depend upon the use of the range-extension filter.

10.1.3.2 The value of C_f shall be zero if one of the following applies:

(1) The filter is in the light path at the time the transmission was recorded ($T\% \geq 0.01\%$).
(2) The photometric system is not equipped with a removable filter.
(3) The ND-2 filter is of the correct optical density of 2.

10.1.3.3 The value of C_f shall be as determined by the procedure described in Section 7.5 and Table 7.5.6 if the filter is moved out of the light path at the time it is measured ($T\% < 0.01\%$).

10.2 Clear Beam Correction Factor, D_c.

10.2.1 For each specimen, the value of the "clear beam" reading, T_c, shall be recorded to determine the correction factor D_c as described in 9.7.4.

10.2.2 D_c shall be calculated as for D_s in Section 10.1.

10.2.3 The correction factor D_c shall not be required to be recorded if it is less than 5 percent of the maximum specific optical density as determined from that which is created by plotting the recording of light versus time in Section 10.1 and 11.2(3) as described in Section 10.1.

10.3* Mass Loss. For each valid specimen tested, the total mass loss, D_m (in grams), shall be calculated and recorded using the following equation:

$$D_m = m_1 - m_2$$

where:
m_1 = initial mass of the specimen (including the aluminum foil used for testing) (g)
m_2 = mass of the specimen after the test (with all the foil wrappings included) (g)

Chapter 11 Test Report

11.1 Descriptive Information. The following descriptive information shall be included in the test report:

(1) Name and address of the testing laboratory
(2) Date and identification number of the report
(3) Name and address of the test requester, when applicable
(4) Name of the manufacturer or supplier of material, product, or assembly tested, if known
(5) Commercial name or other identification marks and description of the sample
(6) Full description of the sample, including such details as type, form, essential dimension, mass or density, color, and coverage rate of any coating
(7) Full description of specimen construction and preparation as described in Sections 6.5 and 6.6
(8) Face of specimen tested as described in Sections 6.5 and 6.6
(9) Thickness of each specimen tested
(10) Conditioning of the test specimens
(11) Date of the test
(12) Modes of testing, indicating irradiance and use of the pilot flame for each specimen
(13) Number of specimens tested for each type of exposure
(14) Test number and any special remarks

11.2 Test Results. The following test results shall be included in the test report:

(1) Table of numerical results containing the following information for each valid specimen tested:
  (a) Specific optical density at 1.5 minutes
  (b) Specific optical density at 4.0 minutes
  (c) Specific optical density at 10.0 minutes
  (d) Specific optical density at end of test (if test duration is different from 10.0 minutes)
  (e) Maximum specific optical density
  (f) Time to ignition
  (g) Time to maximum optical density
  (h) Duration of the test
  (i) If calculated, the neutral density correction, C_f
  (j) The clear beam correction factor, D_c
  (k) The mass loss, D_m
(2) Graphical results for each valid specimen tested
(3) Graph of specific optical density against time
(4) All available information required in Section 6.7 (regarding specimen preparation and coatings used, if applicable) and in Section 9.6 (observations regarding burning characteristics of the specimens and any events of special interest during the tests)
(5) Details of any invalid tests, including reasons for them being invalid as described in 1.3.3.1 and 9.9.3

Copyright National Fire Protection Association
Provided by IHS under license with NFPA
No reproduction or networking permitted without license from IHS
Not for Resale

Annex A Explanatory Material

Annex A is not a part of the requirements of this NFPA document but is included for informational purposes only. This annex contains explanatory material, numbered to correspond with the applicable text paragraphs.

A.1.1.8 For limitations of this test method, see 1.3.3.

A.1.1.10 This test method is known to involve hazardous materials, operations, and equipment as described in 5.2.2, 5.2.3, and 9.7.2.

A.1.3.1.6 See Annex D for additional information on mass optical density.

A.1.3.2.1 The current smoke density chamber test, ASTM E 662, *Test Method for Specific Optical Density of Smoke Generated by Solid Materials*, is used in the United States by specifiers of floor coverings and in the rail transportation industry. The measurement of smoke obscuration is important to the researcher and the product development scientist. This test method will also increase the usefulness of smoke obscuration measurements to specifiers and to product manufacturers.

A.1.3.2.2 The photometric scale used to measure smoke by this test method is similar to the optical density scale for human vision. As with many smoke obscuration test methods, correlation with measurements by other test methods has not been established.

A.1.3.2.3 At the present time, no basis exists for predicting the smoke obscuration by specimens not exposed to the specified fire conditions.

A.1.3.3.2 Results obtained from this test method have proven to be affected by small variations in sample geometry, surface orientation, thickness (either overall or individual layer), mass, and composition. Therefore, it is critical that the replicate samples be cut, sawed, or blanked to identical sample areas, and that records be kept of the respective masses with the individual test data.

Preselection of samples with identical thickness or mass, or both, will reduce the variation but is not necessarily indicative of the actual variation to be expected from the sample as normally supplied.

A.1.3.3.3 There is no simple mathematical formula applicable to calculate the specific optical density of thickness of a sample different from the sample tested. Some information on a relationship between optical density and thickness is found in A. F. Grand, "Defining the Smoke Density Hazard of Plastics."

Results obtained from this test method are affected by small variations of the position of the sample and radiometer relative to the radiant heat source.

A.1.3.3.4 Even when testing the same sample, excessive accumulations of residue should not be permitted to build up, since ruggedness tests have indicated that such deposits serve as additional insulators, tending to reduce normally expected condensation of the aerosol, thereby raising the measured specific optical density.

A.1.3.3.5 The measurements obtained have also proven sensitive to small differences in conditioning *(see Chapters* 7 *and* 8*)*. Many materials, products, or assemblies, such as carpeting and thick sections of wood, plastics, or plywood, require long periods to attain equilibrium (constant weight) even in a forced-draft conditioning chamber.

This test method solves some of the limitations associated with other closed chamber test methods, such as ASTM E 662, *Test Method for Specific Optical Density of Smoke Generated by Solid Materials*, but some additional limitations remain.

A.1.3.3.6 The atmosphere inside the chamber during some tests becomes oxygen-deficient before the end of the experiment, and combustion often ceases when the oxygen concentration decreases. Therefore, for heavy composites, for example, it is possible that the layers farthest away from the radiant source will not undergo combustion. Walls cause losses of combustion particulates through deposition. *(See Annex D for additional information.)*

A.1.3.3.7 Soot and other solid or liquid combustion products settle on the optical surfaces during a test, resulting in potentially higher smoke density measurements than those caused by the smoke in suspension.

A.4.2.2 Stainless steel wire mesh offers adequate protection for the blow-out panel.

A.4.2.3.2 The internal heater should be able to heat the chamber to a temperature just sufficient to minimize smoke condensation on that face. A temperature of 50°C to 55°C has been found suitable for that purpose.

A.4.2.6 A suitable pressure regulator should consist of an open water-filled bottle and a length of flexible tubing inserted 100 mm below the water surface; the other end of the tubing should be connected to the manometer and the chamber. *(See Figure A.4.2.6.)* The regulator should be vented to the exhaust system.

A.4.3.1.3 It has been found that thermocouples of equal length and wired in parallel to the temperature controller perform adequately; alternate wiring methods shown to give equivalent results are also acceptable. Sheathed Chromel®/Alumel® Type K thermocouples have been found suitable for this purpose.

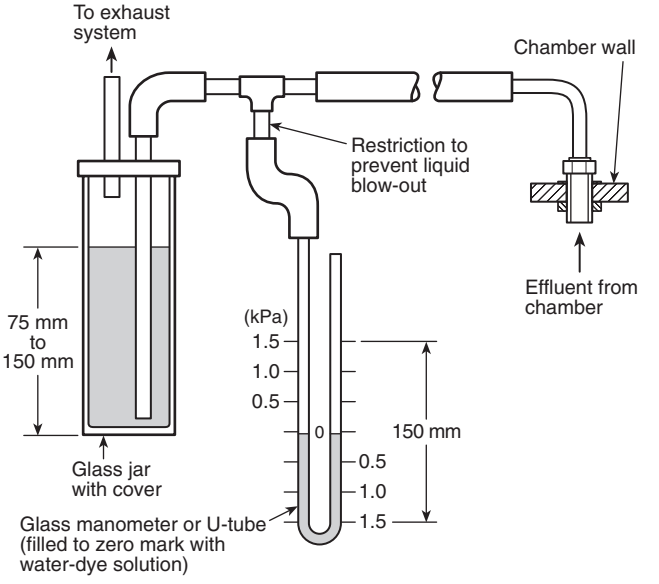

FIGURE A.4.2.6 Typical Chamber Pressure Relief Manometer.

Copyright National Fire Protection Association
Provided by IHS under license with NFPA
No reproduction or networking permitted without license from IHS
Not for Resale

A.4.3.1.4 An irradiance of 50 kW/m^2 will be given by a heater temperature in the 700°C to 750°C temperature range.

While phase-angle control is allowed for the temperature controller of the radiator cone, it should be noted that this control will usually require electrical filtering to avoid the risk of inducing noise in low signal level lines.

A.4.3.3.2 The radiator shield handle is necessary in order to enable repeat tests to be carried out without switching off the radiator cone.

A.4.3.4.1 The manufacturer of Schmidt-Boelter gauges has the following specifications for cooling water: pressure 413,621 kPa, temperature 20.0°C to 26.6°C, and flow rate 0.76 L/min to 1.14 L/min.

A.4.3.4.2 If a recorder that only displays a millivolt output is used, the millivolt value should be converted to heat flux, in kilowatts per square meter, using the calibration factor (or equation, if appropriate) specific to the heat flux meter.

A.4.3.5.3.1 The retainer frame and wire grid are particularly appropriate when testing intumescing specimens and also for reducing unrepresentative edge combustion of composite samples, or for retaining specimens prone to delamination. The wire grid is likely to affect the test results, compared to tests conducted in its absence. However, its use is recommended for several reasons: it helps to promote uniformity in testing by different laboratories; in view of the expected effect of the retainer frame and wire grid on test results as explained above, it is needed for certain specimens; and it is required in ISO 5659-2, *Determination of Specific Optical Density by a Single-Chamber Test.*

A.4.3.6 It is recommended that a small spark ignition device be sited next to the outlet tube of the burner, allowing the operator to ignite the flame without opening the door of the chamber. A suitable system is a spark plug with a 3 mm gap powered from a 10 kV transformer. A suitable transformer is of a type specifically designed for spark-ignition use, with an isolated (ungrounded) secondary to minimize interference with the data-transmission lines. An acceptable electrode length and spark plug location is such that the spark gap is located 13 mm above the specimen, close to the pilot burner.

A.4.5.3.1 The required accuracy of the photodetector is obtained more easily if the measuring systems incorporate scale ranges of 30, 3, 0.3, and so forth, as well as ranges of 100, 10, 1, and so forth.

A.4.5.3.4 Handle all filters by their edges because fingerprints greatly affect their rating. Do not attempt to clean the surface of a filter; once the surface has been damaged, replace the filter.

A.4.6 The chamber should be sufficiently airtight to prevent smoke leakage. The most likely sources of leakage have been found to be the door seal, the inlet and outlet vents, and the safety blow-out panel.

A.4.7 Periodic cleaning is essential for proper operation. Appropriate materials for cleaning the inside of the chamber should be made available.

A.4.7.1 Clean the top window first, then the bottom window, using a nonabrasive cloth dampened with a suitable cleaner. Ethyl alcohol, ethyl ketone, or the equivalent, and soft tissue have been found effective for cleaning the optical windows and the viewing window. Dry the window to prevent streaking or film buildup. Do not use any cleaners that contain wax because wax will cause the smoke to be adsorbed to the glass more quickly.

A.4.7.3 An ammoniated spray detergent and soft scouring pads have been found effective for cleaning the chamber walls.

A.4.8.7 The thermometer is intended for determining ambient temperature or any other needed temperature.

A.5.3 The test procedure involves high temperatures and combustion processes. Therefore, it is possible for eye injuries, burns, ignition of extraneous objects, and inhalation of smoke or combustion products to occur unless proper precautions are taken. To avoid accidental leakage of toxic combustion products into the surrounding atmosphere, it is advisable to evacuate the chamber at the end of a test, into an exhaust system with adequate capacity.

A.6.3 Optional testing modes include the following:

(1) Nonflaming at an irradiance of 25 kW/m^2 (for comparison with the test results from ASTM E 662, *Test Method for Specific Optical Density of Smoke Generated by Solid Materials*)
(2) Nonflaming at an irradiance of 50 kW/m^2 (for comparison with the test results from ISO 5659-2, *Determination of Specific Optical Density by a Single-Chamber Test*)

These exposures are not required. Other testing modes are also possible with this equipment.

A.6.5.2 All specimens consume oxygen when they are combusted in the chamber, and the smoke generation of some specimens (especially those undergoing rapid combustion) is influenced by the reduced oxygen concentration in the chamber.

A.7.1 Heat up the radiator cone gradually from cold, and do not allow it to overheat or to remain operating without a blank specimen holder; that is, a holder with a specimen in it or the heat flux meter in position in front of it.

A.7.2.2.2 In cases of severe maladjustment, the lamp socket should be repositioned also.

A.7.2.2.3 On occasion, this adjustment also includes the optimization of the lens mount position, so that the photodetector gives a maximum reading. This operation will require removal of the template and should be followed by a final check on the position of the image as described in 7.2.2.2.

A.7.3 An indication of the appropriate filter, or combination of filters, is obtained conveniently by removing any compensating filter(s) in the housing above the test chamber, closing the housing cover, placing a compensating filter(s) over the lower optical window inside the test chamber, and checking the instrument reading. The choice of compensating filter(s) determined this way needs to be confirmed by the specified procedure.

A.7.7 Typical flows required to obtain the correct flame are a propane flow of 88.5 cm^3/min ± 1.0 cm^3/min and an airflow to 270 cm^3/min ± 20 cm^3/min.

A.7.8.4 It is necessary for some water circulators to have the chamber door slightly open to allow access for the tubing. Allow at least 10 minutes for stabilizing between adjustments.

A.7.9 Because the test is sensitive to variations in the composition of samples, it is desirable to clean the apparatus when changing from tests on one material, product, or assembly to another so that the results are not affected by chemical or physical interaction between the specimen and the residues

Copyright National Fire Protection Association
Provided by IHS under license with NFPA
No reproduction or networking permitted without license from IHS
Not for Resale

left from previous tests on products. Even when testing specimens of the same material, product, or assembly, accumulations of residue reduce the amount of deposition of smoke, resulting in an increase in the measured value of specific optical density.

A.7.10.1 Products of combustion of some materials, products, or assemblies might cause corrosion of the cone heating element. This corrosion can be compensated for by adjusting the applied voltage for a limited amount of change. If the cone cannot be made to give the required output, a new heating element might be required.

A.7.11 The material should be one that is, and is likely to continue to be, consistently available to the testing laboratory.

A.8.2 Forced-air movement in the conditioning chamber is acceptable to assist in accelerating the conditioning process. The results obtained from this method are sensitive to small differences in specimen conditioning. It is important, therefore, to ensure that the requirements of Sections 8.1 and 8.2 are followed carefully.

A.9.1.3 If the temperature is too high, use of the exhaust fan to draw in cooler air from the laboratory is an adequate procedure.

A.9.6 The smoke generation from some materials, products, or assemblies differs significantly depending on whether combustion occurs in a nonflaming or flaming mode. It is important, therefore, to record as much information as possible about the mode of combustion (e.g., the presence of flame on the specimen surface) during each test.

Coated and faced samples, including sheet laminates, tiles, fabrics, and other composites secured to a substrate with an adhesive, and composites not attached to a substrate, are subject to delamination, cracking, peeling, or other separations affecting their smoke generation.

A.9.7.2 The burner is extinguished in order to reduce the likelihood that the air added during venting will create an explosive mixture in the chamber.

A.9.9.3(2) If a thin specimen that had not been cut *(see 6.7.6)* swells out of the plane, the results from that specimen should be ignored and an extra cut specimen tested.

A.10.3 Note that the deposition of smoke particulates on walls and lens is one of the reasons that if two materials reach the same peak optical density at different times within the test, they are likely to exhibit different fire performance in terms of smoke obscuration, and possibly in terms of mass optical density.

Annex B Precision and Bias

This annex is not a part of the requirements of this NFPA document but is included for informational purposes only.

B.1 Precision. Table B.1(a) and Table B.1(b) contain information on repeatability and reproducibility, based on a preliminary international interlaboratory evaluation in which batches of 16 materials were tested in accordance with this test method by eight laboratories in six countries, for plastic materials [Table B.1(a)] and building materials [Table B.1(b)]. Additional information on repeatability on two wood samples in a single laboratory is presented in Table B.1(c), and repeatability information from another laboratory, which tested six building products, is shown in Table B.1(d). Overall, the results of these preliminary studies indicate that the average coefficient of variation *(CV%)* for repeatability is 14.4, while the average coefficient of variation for reproducibility in the international study is 49.0. Results from a more definitive precision study will be made available after a round-robin evaluation has been completed.

B.2 Bias. The bias of this test method is unknown.

Table B.1(a) Repeatabilities and Reproducibilities of Specific Optical Density for Some Plastics

				Repeatability (Within Laboratories)		Reproducibility (Between Laboratories)	
Material	Thickness (mm)	Irradiance (kW/m^2)	Mean, D_s (10 min)	r	Percent of Mean	R	Percent of Mean
PMMA	1.0	25	11	4	38	10	91
		25 + pf	55	13	24	29	53
		50	54	11	20	17	32
ABS	1.1	25	312	77	25	311	100
		25 + pf	441	146	33	205	46
		50	435	102	23	192	44
Polyurethane rigid foam ($28 kg/m^3$)	25.0	25	49	16	32	61	124
		25 + pf	48	24	51	26	54
		50	145	48	33	97	67
Polyurethane flexible foam ($27 kg/m^3$)	25.0	25	178	49	27	114	64
		25 + pf	80	28	35	56	70
		50	127	46	36	80	63
Expanded polystyrene (nonfire retardant; $14 kg/m^3$)	25.0	25	112	75	67	196	175
		25 + pf	102	75	74	130	128
		50	270	88	33	195	72

Note: "pf" indicates test carried out with pilot flame.

Copyright National Fire Protection Association
Provided by IHS under license with NFPA
No reproduction or networking permitted without license from IHS
Not for Resale

Table B.1(b) Repeatabilities and Reproducibilities of Specific Optical Density for Some Building Materials

Material	Thickness (mm)	Irradiance (kW/m^2)	Mean, D_s (10 min)	Repeatability (Within Laboratories) r	Repeatability (Within Laboratories) Percent of Mean	Reproducibility (Between Laboratories) R	Reproducibility (Between Laboratories) Percent of Mean
Pine	12.1	25	403	97	24	300	74
		25 + pf	26	15	55	56	322
		50	196	191	98	191	98
Chipboard	12.2	25	411	47	12	187	45
		25 + pf	58	59	102	88	153
		50	481	96	20	464	97
Plywood	4.2	25	251	31	12	132	52
		25 + pf	33	15	47	58	175
		50	113	58	31	82	72
Medium density fiberboard	11.9	25	420	127	30	281	67
		25 + pf	68	42	62	72	106
		50	688	114	17	413	60
Paper-faced plasterboard	12.7	25	20	8	42	21	107
		25 + pf	8	8	104	25	314
		50	17	11	64	23	132

Note: "pf" indicates test carried out with pilot flame.

Table B.1(c) Repeatability Experiments Using Wood Samples in a Single Laboratory

Material	Douglas Fir Plywood	Red Oak Flooring
Incident flux: 25 kW/m^2, NF		
D_m (AVG)	496	475
D_m (STD)	47	9
D_m *(CV%)*	9	2
D_m/g (mass loss) (AVG)	24.2	22.1
D_m/g (mass loss) (STD)	4.7	7.3
D_m/g (mass loss) *(CV%)*	20	33
Incident flux: 35 kW/m^2, NF		
D_m (AVG)	475	461
D_m (STD)	11	12
D_m *(CV%)*	2	3
D_m/g (mass loss) (AVG)	19.9	11.9
D_m/g (mass loss) (STD)	3.4	2.7
D_m/g (mass loss) *(CV%)*	17	23
Incident flux: 40 kW/m^2, NF		
D_m (AVG)	491	461
D_m (STD)	13	22
D_m *(CV%)*	3	5
D_m/g (mass loss) (AVG)	22.3	13.4
D_m/g (mass loss) (STD)	4.5	6.0
D_m/g (mass loss) *(CV%)*	20	45
Overall statistics		
D_m (AVG)	487	466
D_m (STD)	29	16
D_m *(CV%)*	6	3
D_m/g (mass loss) (AVG)	22.1	15.8
D_m/g (mass loss) (STD)	4.1	7.1
D_m/g (mass loss) *(CV%)*	19	45

AVG: Average. STD: Standard deviation. *CV%*: Coefficient of variation.

Annex C Interlaboratory Application

This annex is not a part of the requirements of this NFPA document but is included for informational purposes only.

C.1 Calibration of the Working Heat Flux Meter. The calibration of the heat flux meter should be checked whenever a recalibration of the apparatus is carried out by comparing the working heat flux meter to two instruments of the same type and similar range, and held as reference standards not to be used for any other purpose. One of the heat flux meter reference standards should be fully calibrated at an accredited laboratory at yearly intervals. This meter should be used to calibrate the heater temperature controller. *[See Figure 4.3.2.1(a) and Figure 4.3.2.1(b).]* The meter should be positioned at a location equivalent to the center of the specimen face during this calibration. One option for making the comparison of working and reference standard heat flux meters as required in 4.3.4.3 is the use of the conical heater *(see 4.3.1)*, with each heat flux meter mounted in turn in the calibration position *(see 4.3.1.2)*, taking care to allow the whole apparatus to attain thermal equilibrium. Alternatively, an apparatus specially built for comparative purposes can be used — for example, as described in BS 6809, *Method of Calibration of Radiometers for Use in Fire Testing.*

It is noted that the use of two reference instruments rather than one provides a greater safeguard against change in sensitivity of the reference instruments.

C.2 Variability in the Specific Optical Density of Smoke Measured in This Single Chamber Test.

C.2.1 A preliminary interlaboratory trial has been carried out in which replicate batches of 16 materials were tested in accordance with this test method by eight laboratories in six countries. This preliminary interlaboratory trial showed that the specific optical

Copyright National Fire Protection Association
Provided by IHS under license with NFPA
No reproduction or networking permitted without license from IHS
Not for Resale

Table B.1(d) Repeatability Using Products in a Single Laboratory

Material	E Foam[a]	Sh Fl 1[b]	Fl Tle[c]	PP Crp[d]	Lens[e]	Sh Fl 2[f]
25 kW/m^2, NF						
D_m (AVG)	134	266	178	543	333	483
D_m (STD)	8	9	9	15	17	93
D_m *(CV%)*	6	3	5	3	5	19
D_{10} (AVG)	111	264	170	521	202	396
D_{10} (STD)	5	9	13	12	25	33
D_{10} *(CV%)*	5	4	8	2	12	8
25 kW/m^2, F						
D_m (AVG)	29	143	97	340	94	476
D_m (STD)	6	8	37	29	6	20
D_m *(CV%)*	19	6	38	9	7	4
D_{10} (AVG)	25	121	91	269	72	344
D_{10} (STD)	4	7	37	17	5	15
D_{10} *(CV%)*	15	6	40	6	7	4
50 kW/m^2, F						
D_m (AVG)	125	304	144	388	110	691
D_m (STD)	7	15	10	31	8	37
D_m *(CV%)*	6	5	7	8	2	5
D_{10} (AVG)	90	205	118	245	77	418
D_{10} (STD)	5	9	9	20	7	15
D_{10} *(CV%)*	5	4	8	8	3	4

AVG: Average. STD: Standard deviation. *CV%*: Coefficient of variation.
[a]Blended polymeric/rubber compound used as thermal insulation.
[b]Commercial PVC floor covering with inorganic felt backing.
[c]Commercial filled PVC floor tile.
[d]Carpet with polypropylene yarn and scrim.
[e]Polymeric material used to cover fluorescent light fixtures.
[f]Residential unfilled PVC floor covering.

densities D_s (at 10 minutes) of some materials had a higher relative variability than those of others. The relative variability increased particularly for those materials that did not ignite readily at an incident heat flux of 25 kW/m^2, and for those materials that showed higher D_s (at 10 minutes) values in the nonflaming mode than in the flaming mode.

C.2.2 The preliminary interlaboratory trial has demonstrated the ability of this test apparatus to discriminate between materials that generate different levels of smoke. Table B.1(a) and Table B.1(b) present the repeatabilities and reproducibilities of D_s (at 10 minutes) for five plastics and five building materials, as derived in accordance with the statistical analysis in ISO 5725, *Accuracy (Trueness and Precision) of Measurement Methods and Results — Part 1: General Principles and Definitions* and *Part 2: Basic Method for the Determination of Repeatability and Reproducibility of a Standard Measurement Method.*

C.2.3 Repeatability, *r*, is the value below which the difference between two D_s (at 10 minutes) values obtained with the same method on identical test samples, under the same conditions (same laboratory, same apparatus, same operator, within a short interval of time), might be expected to lie with a 95 percent probability.

C.2.4 Reproducibility, *R*, is the value below which the difference between two D_s (at 10 minutes) values obtained with the same method on an identical test sample, under different conditions (different laboratories, different operators, different apparatuses), might be expected to lie with a 95 percent probability.

C.2.5 The preliminary interlaboratory trial has suggested that it is not meaningful to quote a single value for the variability of the test. The D_s (at 10 minutes) data show that smoke generation depends on the ignition behavior of the materials (among other factors). Since ignition times are sensitive to irradiance (or incident heat flux), it is clear that careful attention should be paid to the measurement of irradiance.

C.2.6 A further examination of repeatability was also conducted in a single laboratory for wood samples, and the results are shown in Table B.1(c). It is clear from these results that the repeatability of the test method is much better if the materials tested undergo consistent ignition under the conditions used for testing.

C.2.7 Six different products were selected for evaluation in a single laboratory. These selections represent typical commercial products that display a wide range of responses when subjected to the heat fluxes and the ignition source employed in this test method. An analysis of the data was conducted as a measure of the repeatability of the test method. See Table B.1(d), which also identifies the products included in the study. The repeatability of the test method for this selection of products is good, as indicated by the calculated coefficient of variation, *CV%*. Some of the products are difficult to ignite, some of them bulge toward the heater, and some of them melt; however, the combination of the cone heater and the horizontal orientation minimizes the effect of these common performance problems.

Copyright National Fire Protection Association
Provided by IHS under license with NFPA
No reproduction or networking permitted without license from IHS
Not for Resale

Annex D Determination of Mass Optical Density

This annex is not a part of the requirements of this NFPA document but is included for informational purposes only.

D.1 Introduction. The value of mass optical density determined by this test method is specific to the specimen in the form and thickness tested and is not to be considered an inherent or fundamental property.

D.1.1 Principles of the Test. The conditions of thermal exposure and of smoke collection are the same as those in the mandatory part of the test method. Additional mass loss measurements are conducted on the specimen during the test, so that a mass loss/time curve is determined and mass optical density can then be calculated.

D.1.2 Test Specimen. The same specifications on suitability of materials, products, or assemblies apply in this Annex as in the mandatory portion of the test method. *(See Chapter 6.)* Similarly, the same number of specimens, their preparation, and their conditioning also apply. *(See Chapter 8.)*

D.1.3 Ancillary Equipment.

D.1.3.1 The load cell should have a measuring range of 500 g and a weighing accuracy of ±0.1 g. Mount the load cell in an enclosure *[see Figure D.1.3.1(a) through Figure D.1.3.1(d)]* with a close-fitting labyrinth seal between the sample support rod and the enclosure to minimize ingress of smoke particles and aggressive combustion products.

The load cell assembly should be easily removable from the smoke chamber, so that the mandatory test procedure can be performed without unnecessary exposure of the load cell, if mass optical density data are not required.

Figure D.1.3.1(a) through Figure D.1.3.1(d) differ from Figure 4.2.1, Figure 4.3.1.1, and Figure 4.3.2.1(a) in that they show the location of the (optional) load cell.

D.1.3.2 To level the unit on the base plate, the load cell enclosure should be fitted with one fixed foot and two adjustable feet. The load cell should also have a means to centralize the load cell assembly beneath the cone radiator.

D.1.3.3 The load cell should have a safe operating temperature range of 15°C to 70°C. A mineral fiberboard shield should be positioned over the top and sides of the load cell enclosure during thermal exposure of the test specimen, so that excessive temperature rise within the enclosure is prevented and drift of the load cell is avoided.

D.1.3.4 The load cell should be connected to a controller that drives the load cell and that is situated externally to the smoke chamber.

This controller should preferably be fitted with a digital mass display, a scaleable millivolt output, and a sample tare facility.

D.1.4 Calibration Procedures. The load cell calibration should be checked with standard reference weights, in the range of test specimen mass, before each series of tests.

D.1.5 Test Procedure. Conduct the test in the same manner as detailed in Chapter 9, with the added precaution of ensuring that the load cell measurements are conducted properly.

D.1.6 Calculation of Mass Optical Density (MOD). For each specimen, calculate the mass optical density (in m^2/kg) at 10 minutes using the following equation:

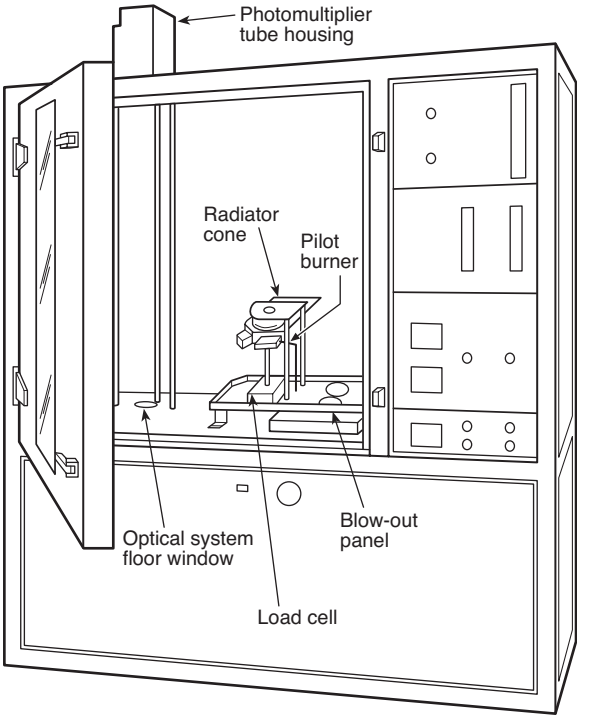

FIGURE D.1.3.1(a) Typical Arrangement of Test Chamber with Load Cell.

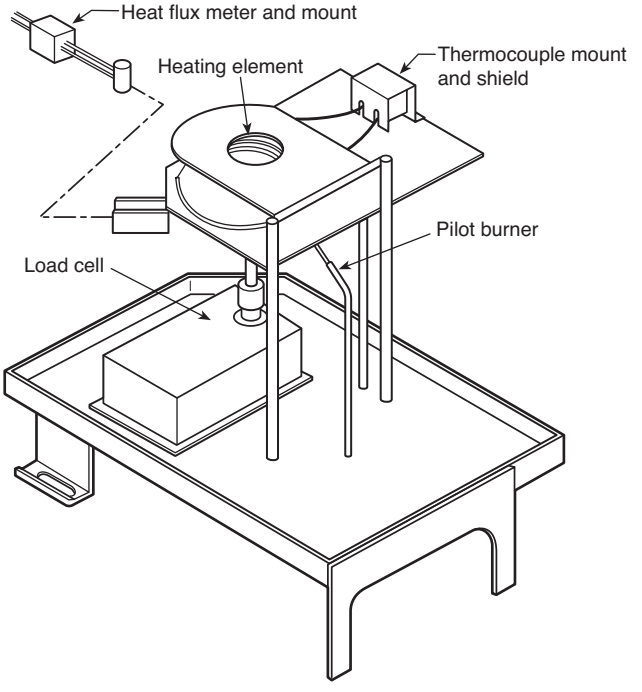

FIGURE D.1.3.1(b) Typical Framework for Support of Radiator Cone, Specimen, Flux Meter, and Load Cell.

Copyright National Fire Protection Association
Provided by IHS under license with NFPA
No reproduction or networking permitted without license from IHS
Not for Resale

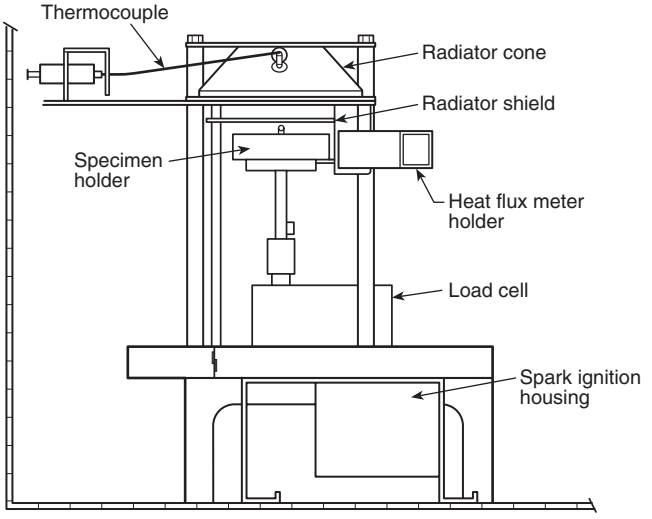

FIGURE D.1.3.1(c) Typical Arrangement of Radiator Cone, Specimen Holder, Radiator Shield, and Load Cell (side view).

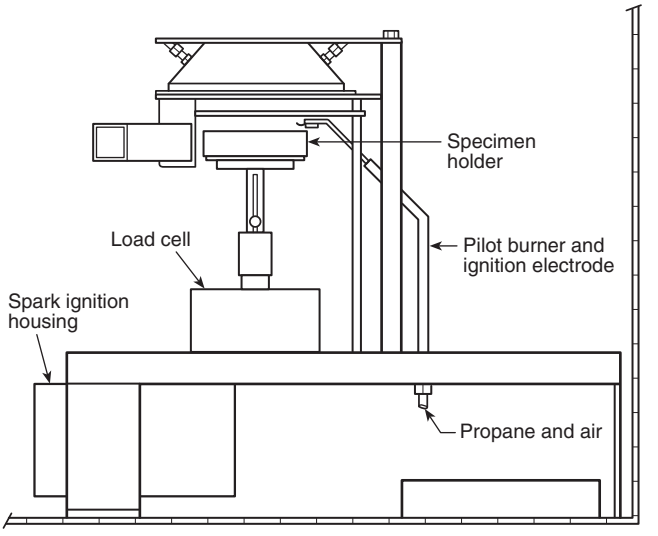

FIGURE D.1.3.1(d) Typical Arrangement of Radiator Cone, Specimen Holder, Radiator Shield, and Load Cell (front view).

$$MOD = \left(\frac{D}{L}\right)\left(\frac{V}{D_m \times 0.001}\right)$$

where:
D = optical density of smoke
L = length of light path
V = volume of the chamber
D_m = mass loss of the test specimen ($D_m = m_i - m_f$) in g

The optical density of smoke is calculated by means of the following equation:

$$D = \log\left(\frac{I_0}{I}\right)$$

where:
I and I_0 = light intensity for a parallel light beam having traversed a certain length of smoky environment and reaching photodetector and the light intensity for a beam of parallel light rays, measured in a smoke-free environment, with a detector having the same spectral sensitivity as the human eye and reaching the photodetector, respectively

NOTE 1: The volume of the chamber, V, should be taken as 0.51 m^3 and the length of the light path, L, as 0.914 m.

NOTE 2: It is possible to calculate the mass optical density at times other than 10 minutes by using the specimen mass/time graph recorded during the test.

D.1.7 Test Report. The test report should include all the information required in the mandatory part of the test method as well as the following for each valid specimen tested:

(1) Mass optical density at 10 minutes from the start of the test
(2) Graph of specimen mass against time

D.2 Smoke Obscuration.

D.2.1 Visibility. The visibility in a fire atmosphere will adversely affect the ability of victims to escape and the ability of fire fighters to fight the fire.

D.2.2 Methods of Measurement. The test methods used to measure smoke obscuration accompanying a fire can be classified into the following five categories [1]:

(1) *Category I.* Static small-scale smoke obscuration tests on materials
(2) *Category II.* Dynamic small-scale smoke obscuration tests on materials
(3) *Category III.* Large-scale smoke obscuration tests on products not designed for heat release
(4) *Category IV.* Full-scale tests measuring heat release and smoke release
(5) *Category V.* Small-scale tests measuring heat release and smoke release

D.2.3 Smoke Obscuration Measurement Test Methods.

D.2.3.1 There are a significant number of ASTM test methods that measure fire-test-response characteristics associated with smoke obscuration. It is possible to classify most of them as being an example of one of the categories listed in D.2.2.

D.2.3.2 ASTM D 2843, *Test Method for Density of Smoke from the Burning or Decomposition of Plastics*, and ASTM E 662, *Test Method for Specific Optical Density of Smoke Generated by Solid Materials*, are examples of Category I tests.

D.2.3.3 ASTM D 4100, *Test Method for Gravimetric Determination of Smoke Particulates from Combustion of Plastic Materials*, is an example of a Category II test that measures smoke gravimetrically instead of photometrically, as most other tests do.

D.2.3.4 ASTM E 84, *Test Method for Surface Burning Characteristics of Building Materials*, is an example of a Category III test.

D.2.3.5 ASTM D 5424, *Test Method for Smoke Obscuration Caused by Burning Cables in a Vertical Configuration*, ASTM E 1537, *Test Method for Fire Testing of Real Scale Upholstered Furniture Items*, and ASTM E 1590, *Test Method for Fire Testing of Real Scale Mattresses*, are examples of Category IV tests.

D.2.3.6 ASTM E 906, *Test Method for Heat and Visible Smoke Release Rates for Materials and Products*, ASTM E 1354, *Test Method for Heat and Visible Smoke Release Rates for Materials and*

Copyright National Fire Protection Association
Provided by IHS under license with NFPA
No reproduction or networking permitted without license from IHS
Not for Resale

Products Using an Oxygen Consumption Calorimeter, and ASTM E 1474, *Test Method for Determining the Heat Release Rate of Upholstered Furniture and Mattress Components or Composites Using a Bench Scale Oxygen Consumption Calorimeter*, are examples of Category V tests.

D.2.3.7 The test method described here is also an example of a Category I test, which offers solutions to some of the deficiencies described for ASTM E 662, *Test Method for Specific Optical Density of Smoke Generated by Solid Materials.*[2–4]

D.2.4 Correlation Between Test Methods.

D.2.4.1 Little information exists about correlations between test methods measuring smoke obscuration. It has been found that there is good correlation between data from ASTM E 906, *Test Method for Heat and Visible Smoke Release Rates for Materials and Products*, and ASTM E 1354, *Test Method for Heat and Visible Smoke Release Rates for Materials and Products Using an Oxygen Consumption Calorimeter.*[5] It has also been found that there is good correlation between data from ASTM D 5424, *Test Method for Smoke Obscuration Caused by Burning Cables in a Vertical Configuration*, and ASTM E 1354, *Test Method for Heat and Visible Smoke Release Rates for Materials and Products Using an Oxygen Consumption Calorimeter*,[6] while there is poor correlation between the data from ASTM E 662, *Test Method for Specific Optical Density of Smoke Generated by Solid Materials*, and either ASTM E 906, *Test Method for Heat and Visible Smoke Release Rates for Materials and Products*, or ASTM E 1354, *Test Method for Heat and Visible Smoke Release Rates for Materials and Products Using an Oxygen Consumption Calorimeter*, or a fully lined room, as discussed in ASTM E 603, *Guide for Room Fire Experiments.*[5,7]

D.2.4.2 The test method described here would be expected to offer more adequate results than ASTM E 662, *Test Method for Specific Optical Density of Smoke Generated by Solid Materials*, principally because of two features — the capability of using high-incident heat fluxes and the use of horizontal samples, which do not lose material due to melting and dripping.

D.3 Smoke Density Chamber.

D.3.1 Development. The smoke density chamber test was developed at the National Bureau of Standards and was first described in an ASTM research symposium in 1967.[8] Since that time, there have been numerous publications reporting on its application and on studies of the correlation of results of interlaboratory tests through its use.[9–15] Features of a chamber like the one in this test method, with a conical radiant heater, have also been discussed in the literature.[16]

D.3.2 Method. The method is somewhat like the box-type test developed by Rohm and Haas,[17], which has since been standardized as ASTM D 2843, *Test Method for Density of Smoke from the Burning or Decomposition of Plastics.* However, it provides certain modifications in the nature of specimen exposure and the capability for quantitative measurement of the smoke produced. Advantages provided by use of this test method include the following:

(1) The smoke collection chamber is essentially sealed so all smoke produced during a test is retained.
(2) Only one surface of a test specimen is exposed to fire or radiant heating, thereby providing a measure of effectiveness of surface treatment assisting in control of smoke release.
(3) A vertical photometer is used as a means for avoiding measurement errors resulting from smoke stratification.
(4) Provision is made for reporting results of smoke measurements in terms of specific optical density, which is a measurement of the amount of smoke produced and is, therefore, useful for comparing one material, product, or assembly against another.

D.3.3 Features of the Test Method.

D.3.3.1 The following two exposure conditions are simulated by the test:

(1) Radiant heating in the absence of ignition
(2) An open flaming combustion of the specimen in the presence of supporting radiation

These two conditions were selected as representative of two types of fire involvement of a product. The irradiance level of 25 kW/m^2 was selected as the highest for which most cellulosics would pyrolyze without self-ignition. This irradiance level is much lower than that which would exist in a compartment after flashover. It more nearly simulates conditions in the initial stages of a fire and, because of that, is representative of a nonflaming fire condition.

D.3.3.2 The higher heat flux, namely 50 kW/m^2, is representative of what typically is found in a flaming fire.

D.3.3.3 The primary measurement made during the conducting of this test method is the amount of light transmitted by an optical system. There is considerable advantage to using specific optical density as a value by which to evaluate results as compared to using percent light transmittance.

D.3.3.4 The use of this unit of smoke measurement is based on Bouguer's law of light attenuation, which is expressed in the following equation:

$$T = T_0 e^{-\sigma L}$$

where:
T = % flux transmittance
T_0 = 100 = initial transmitted flux
e = 2.7183
σ = attenuation coefficient
L = length of the optical path

For a monodispersed aerosol, σ is found to be proportional to the product of the size and the number of particles. The optical density, d, is defined by the following equation:

$$d = \log \frac{100}{T}$$

Therefore, the optical density is calculated from the following equation:

$$d = \frac{\sigma L}{\log_e 10} = \frac{\sigma L}{2.303}$$

D.3.3.5 While the smoke produced from fire usually does not meet the requirements of a monodispersed aerosol, it has been found to behave in a photometric manner such that, for engineering purposes, optical density can be considered to be roughly proportional to the smoke particulate produced. The fire-test-response characteristic measured in this test, specific optical density, D_s, has been introduced to provide a conveniently factored rating scale as shown in the following equation:

Copyright National Fire Protection Association
Provided by IHS under license with NFPA
No reproduction or networking permitted without license from IHS
Not for Resale

$$D_s = \frac{V}{AL} d = \frac{V}{AL} \log\left(\frac{100}{T}\right)$$

where:

D_s = specific optical density
V = volume of chamber (m^3)
A = exposed area of specimen (m^2)
V/AL = 132
d = optical density

D.3.3.6 Certain test methods report smoke obscuration simply in terms of light transmission. The problem with such a procedure is that the percent light transmittance is not a reciprocal, linear function of the quantity of smoke produced; i.e., the assumption that as the quantity of smoke produced is doubled, the percent light transmittance is cut in half is incorrect.

D.3.3.7 The concept of specific optical density, while old in terms of chemical photometric practice, was first introduced for measuring smoke obscuration as part of the smoke density chamber test method (ASTM E 662, *Test Method for Specific Optical Density of Smoke Generated by Solid Materials*). Specific optical density is based on Bouguer's law, as shown in the first equation in D.3.3.4, and permits reporting smoke development in terms that recognize the area of specimen involved, the volume of the chamber, and the optical path length of the photometer. Specific optical density is a dimensionless quantity, but its value should be recognized as relating to the sample only in the thickness tested. In theory, it has the advantage of providing a basis for estimating the smoke optical density or light-obscuring properties of smoke that can be developed by the same product in other fire-involved areas, different light paths, in another enclosure volume, on the assumption of uniform smoke-air mixing and under similar fire exposure conditions. In practice, techniques for making these estimates have not been developed for the following reasons:

(1) Variations in types of fire exposure
(2) The rate of involvement of a material, product, or assembly in a fire
(3) The ventilation characteristics of the compartment
(4) The degree of stratification of the accumulated smoke

These are, in most instances, undetermined variables that greatly influence light transmission through smoke obscuration resulting from a fire.

D.3.4 Factors Influencing the Test. During development of the original smoke density chamber test method (ASTM E 662, *Test Method for Specific Optical Density of Smoke Generated by Solid Materials*), many factors were considered that could influence the measurements. Some of the more important of these are briefly discussed in D.3.4.1 through D.3.4.4.

D.3.4.1 It was observed that, in spite of significant thermal convection mixing, smoke near the top of the cabinet was obviously more dense. This fact was verified by experimental measurements. As a result, it was apparent that a vertical photometer would yield a much more representative measurement of smoke accumulation than would be provided by a horizontal unit at one position in the chamber.

D.3.4.2 Experiments showed that the optical density of the accumulated smoke was sensitive to the spacing between the specimen face and the surface of the radiation source. Experiments suggested that the sensitivity was caused by two effects — closer spacing caused more smoke to be consumed near the heat source, which subsequently reduced air circulation past the specimen and therefore inhibited open flaming combustion. As a result, if the spacing between specimen face and heat source is changed, a small systematic change should be expected in smoke obscuration measurement.

D.3.4.3 The use of aluminum foil to wrap the back and edges of the specimen was introduced to provide better standardization, because it was found that if smoke particles were allowed to leak out through the back or edges of the specimen holder, an undesirable variation in the measurements was introduced.

D.3.4.4 The set-up in this test method, with the sample being tested horizontally, limits the problem of testing material, products, or assemblies, such as those containing some thermoplastic materials, which can melt and drip away from the heat source.

D.4 References for Annex D.

1. Hirschler, M. M. "Analysis of an Attachment for Use with the National Bureau of Standards Smoke Density Chamber to Enable Measurements of Smoke Obscuration to Be Done at Different Orientations," *Fire and Materials* 17, 1993, pp. 173–183.

2. Breden, L. H. and M. Meisters. "The Effect of Sample Orientation in the Smoke Chamber," *Journal of Fire and Flammability* 7, 1976, pp. 234–247.

3. Babrauskas, V. "Application of Predictive Smoke Measurements," *Journal of Fire and Flammability* 12, 1981, pp. 51–64.

4. Quintiere, J. G. "Smoke Measurements: An Assessment of Correlations between Laboratory and Full-Scale Experiments," *Fire and Materials* 6, 1982, pp. 145–160.

5. Hirschler, M. M. "How to Measure Smoke Obscuration in a Manner Relevant to Fire Hazard Assessment: Use of Heat Release Calorimetry Test Equipment," *Journal of Fire Sciences* 9, 1991, pp. 183–222.

6. Hirschler, M. M. "Can Heat Release Really Predict the Flame Spread of Electrical Cables?" 2nd International Fire Materials Conference and Exhibition, Crystal City, VA, Sept. 23-24, 1993, pp. 181–190.

7. Hirschler, M. M. "Comparison of Smoke Release Data from Full Scale Room Tests with Results in the Cone Calorimeter and the NBS Smoke Chamber," Proc. Interflam 93, Oxford, U. K., March 30-April 1, 1993, *Interscience Communications*, London, U. K. 1993, pp. 203–212.

8. Gross, D., J. J. Loftus, and A. F. Robertson. "Method for Measuring Smoke from Burning Materials," Symposium on Fire Test Methods — Restraints and Smoke, ASTM STP 422, American Society for Testing and Materials, Philadelphia, PA, 1966, pp. 166.

9. Gross, D., J. J. Loftus, T. G. Lee, and V. E. Gray. "Smoke and Gases Produced by Burning Aircraft Interior Materials," NBS Bldg. Sci. Series, BSS 18, U.S. Government Printing Office, Washington, D. C., February 1969.

10. Brenden, J. J. "Usefulness of a New Method for Smoke Yield from Species and Panel Products," *Forest Products Journal*, FPJOA, Vol. 21, 1971, pp. 23–28.

11. Lee, T. G. "Interlaboratory Evaluation of Smoke Density Chamber," NBS Tech. Note 708, December 1971.

12. Lee, T. G. "The Smoke Density Chamber Method for Evaluating the Potential Smoke Generation of Materials," NBS Tech. Note 757, January 1973.

13. ASTM Committee E 05.2, "Interlaboratory Test Data for the Smoke Chamber Test Method," RR: E-5-1002, 1976.

14. Gaskill, J. R. "Smoke Development in Polymers During Pyrolysis or Combustion," *Journal of Fire and Flammability*, July 1970, pp. 183–216.

Copyright National Fire Protection Association
Provided by IHS under license with NFPA
No reproduction or networking permitted without license from IHS
Not for Resale

15. Chien, W. P., and J. D. Seader. "Prediction of Specific Optical Density for a Smoke Obscuration in an NBS Smoke Density Chamber," *Fire Technology*, FITCA, Vol. 11, August 1975, pp. 206–217.

16. Cornelissen, A. A. "Smoke Release Rates: Modified Smoke Chamber versus Cone Calorimeter — Comparison of Results," *Journal of Fire Sciences* 10, 1992, pp. 3–19.

17. Bartosic, A. J., and F. J. Rarig. "Evaluation of the XP2 Smoke Density Chamber," Symposium on Fire Test Methods — Restraints and Smoke, ASTM STP 422, American Society of Testing and Materials, Philadelphia, PA, 1966, p. 106.

Annex E Informational References

E.1 Referenced Publications. The documents or portions thereof listed in this annex are referenced within the informational sections of this standard and are not part of the requirements of this document unless also listed in Chapter 2.

E.1.1 NFPA Publications. (Reserved) National Fire Protection Association, 1 Batterymarch Park, Quincy, MA 02169-7471.

E.1.2 Other Publications.

E.1.2.1 ASTM Publications. ASTM International, 100 Barr Harbor Drive, P.O. Box C700, West Conshohocken, PA 19428-2959.

ASTM D 2843, *Test Method for Density of Smoke from the Burning or Decomposition of Plastics*, 1999.

ASTM D 4100, *Test Method for Gravimetric Determination of Smoke Particulates from Combustion of Plastic Materials*, 1982 (reapproved 1989 with editorial change, discontinued 1997).

ASTM D 5424, *Test Method for Smoke Obscuration Caused by Burning Cables in a Vertical Configuration*, 1999.

ASTM E 84, *Test Method for Surface Burning Characteristics of Building Materials*, 2000.

ASTM E 603, *Guide for Room Fire Experiments*, 1998a.

ASTM E 662, *Test Method for Specific Optical Density of Smoke Generated by Solid Materials*, 1997.

ASTM E 906, *Test Method for Heat and Visible Smoke Release Rates for Materials and Products*, 1999.

ASTM E 1354, *Test Method for Heat and Visible Smoke Release Rates for Materials and Products Using an Oxygen Consumption Calorimeter*, 1999.

ASTM E 1474, *Test Method for Determining the Heat Release Rate of Upholstered Furniture and Mattress Components or Composites Using a Bench Scale Oxygen Consumption Calorimeter*, 1996a.

ASTM E 1537, *Test Method for Fire Testing of Real Scale Upholstered Furniture Items*, 1999.

ASTM E 1590, *Test Method for Fire Testing of Real Scale Mattresses*, 1999.

E.1.2.2 British Publications. BSI British Standards, 389 Chiswick High Road, London W4 4AL, United Kingdom.

BS 6809, *Method of Calibration of Radiometers for Use in Fire Testing*, 1987.

E.1.2.3 ISO Publications. International Organization for Standardization, 1 rue de Varembé, Case Postale 56, CH-1211 Genève 20, Switzerland.

ISO 5659-2, *Determination of Specific Optical Density by a Single-Chamber Test*, 1994.

ISO 5725-1, *Accuracy (Trueness and Precision) of Measurement Methods and Results — Part 1: General Principles and Definitions*, 1994 (with Cor 1: 1998).

ISO 5725-2, *Accuracy (Trueness and Precision) of Measurement Methods and Results — Part 2: Basic Method for the Determination of Repeatability and Reproducibility of a Standard Measurement Method*, 1994.

E.1.2.4 Articles.

Grand, A. F. "Defining the Smoke Density Hazard of Plastics," *Journal of Fire and Flammability* 7, 1976, pp. 217–233.

Breden, L. H. and M. Meisters. "The Effect of Sample Orientation in the Smoke Chamber," *Journal of Fire and Flammability* 7, 1976, pp. 234–247.

Babrauskas, V. "Application of Predictive Smoke Measurements," *Journal of Fire and Flammability* 12, 1981, pp. 51–64.

Quintiere, J. G. "Smoke Measurements: an Assessment of Correlations Between Laboratory and Full-Scale Experiments," *Fire and Materials* 6, 1982, pp. 145–160.

E.2 Informational References. (Reserved)

E.3 References for Extracts. (Reserved)

--`,,```,,,,````-`-`,,`,,`,`,,`---
Copyright National Fire Protection Association
Provided by IHS under license with NFPA
No reproduction or networking permitted without license from IHS
Not for Resale

Index

Copyright © 2007 National Fire Protection Association. All Rights Reserved.

The copyright in this index is separate and distinct from the copyright in the document that it indexes. The licensing provisions set forth for the document are not applicable to this index. This index may not be reproduced in whole or in part by any means without the express written permission of NFPA.

-A-

Apparatus ..... *see* Test apparatus
Application of standard ..... 1.3, A.1.3.1.6 to A.1.3.3.7
Assembly 6.5.2.5, 6.7.4
Definition 3.3.1

-B-

Balance 4.8.1
Bias of test B.2
Blow-out panels 4.2.2, A.4.2.2
Burners ..... *see* Pilot burners

-C-

Calculations ..... Chap. 10
Mass optical density D.1.6
Specific optical density 10.1
Clear beam correction factor 10.2
Mass loss 10.3, A.10.3
Calibration
Frequency of 7.10, A.7.10.1
Heat flux meters 4.3.4.3, C.1
Mass optical density D.1.4
Test apparatus ..... *see* Test apparatus
Chamber ..... *see* Test chamber
Cleaning of apparatus 7.8.1, 7.9, A.7.9
Chamber walls 4.7.3, A.4.7.3
Materials for 4.7, A.4.7
Optical system windows 4.7.1, A.4.7.1
Specimen holders 4.7.4
Viewing window 4.7.2
Clear beam correction factor 10.2
Compensating filters
Checking, frequency of 7.10.1
Selection of 7.3, A.7.3
Composite A.1.3.3.6, A.4.3.5.3.1
Definition 3.3.2
Continuous 1.3.1.6, A.1.3.1.6
Definition 3.3.3

-D-

Data acquisition ..... *see* Recorders
Data evaluation 1.3.3.2, A.1.3.3.2
Definitions ..... Chap. 3
Dynamic measurements 1.3.3.7, A.1.3.3.7

-E-

Energy source 1.3.1.1
Exhaust vents ..... *see* Venting
Exposed surface 6.2
Definition 3.3.4

-F-

Filters
Compensating 7.3, 7.10.1, A.7.3
Neutral density 4.5.3.2.2, 4.5.3.3.1, 4.5.3.3.2, 4.5.3.4, 4.5.4.2, A.4.5.3.4
Range-extension ..... 4.5.3.2.2, 7.3.2, 7.5, Table 7.10.1
Flaming exposures 1.3.1.3.2, 1.3.1.5, 6.2, 6.3.2, 9.2

-G-

Gas supply 4.4

-H-

Heaters
Preheating of 4.8.4
Radiator cone 4.3.1.1, 4.3.1.4, A.4.3.1.4, A.7.10.1
Heat flux meters 4.3.4, 7.8.1.2, 7.8.4, A.4.3.4.1, A.4.3.4.2, A.7.8.4
Calibration of 4.3.4.3, 7.10.1, C.1
Recorder for 4.3.4.2, A.4.3.4.2

-I-

Ignition 9.2.1
Inlet vent ..... *see* Venting
Interlaboratory application ..... Annex C

-L-

Light interference 5.1
Light source 4.5.2
Beam collimation 7.2.2, A.7.2.2.2, A.7.2.2.3
Beam focusing 7.2.3
Light transmissions 1.3.1.4
Percentage of 9.9.7
Recording 9.5
Limitations of standard ..... 1.3.3, A.1.3.3.2 to A.1.3.3.7
Linear measuring devices 4.8.3
Load cell 1.3.3.6, A.1.3.3.6

-M-

Manometer 4.2.6.2
Mass loss 10.3, A.10.3
Mass optical density (MOD) ..... 1.3.1.6, A.1.3.1.6, Annex D
Ancillary equipment for D.1.3
Calculation of D.1.6
Calibration procedures D.1.4
Definition 3.3.5
Specimens for D.1.2
Test principles D.1.1
Test procedure D.1.5
Test report D.1.7
Measurements
Dynamic 1.3.3.7, A.1.3.3.7
Units 1.4

-N-

Neutral density filters (ND-2) ... 4.5.3.2.2, 4.5.3.3.1, 4.5.3.3.2, 4.5.3.4, 4.5.4.2, A.4.5.3.4
Nonflaming exposures 1.3.1.3.2, 1.3.1.5, A.6.3

-O-

Observations 9.6
Operator safety 5.3, A.5.3
Optical system windows
Cleaning 4.7.1, 7.3.1, 9.1.3.1, 9.1.3.2, A.4.7.1
Construction 4.2.3, A.4.2.3.2
Covering 4.5.4.2
Light blocking 4.5.4.3

Copyright National Fire Protection Association
Provided by IHS under license with NFPA
No reproduction or networking permitted without license from IHS
Not for Resale

-P-

Panels, blow-out ..... *see* Blow-out panels
Photodetector 4.5.3, A.4.5.3.1, A.4.5.3.4
Photometric system 4.5, A.4.5.3.1, A.4.5.3.4
Additional equipment 4.5.4
Alignment of 7.2, A.7.2.2.2, A.7.2.2.3
Calibration frequency 7.10.1
Light source 4.5.2
Preparation of 9.3
Photomultiplier tube 4.5.3.1, 4.5.3.2, A.4.5.3.1
Physiological aspects of vision 1.3.2.2, A.1.3.2.2
Pilot burners 1.3.1.3, 4.3.6, A.4.3.6
Calibration of 7.7, A.7.7
Extinguishment of 9.7.2, A.9.7.2
Tests with flames 9.2
Precision of tests B.1
Pressure control facilities 4.2.6, A.4.2.6
Pre-test 8.1
Procedure ..... Chap. 9
Initial conditions 9.1, A.9.1.3
Mass optical density test D.1.5
Observations 9.6, A.9.6
Photometric system preparation 9.3
Pilot flame tests 9.2
Recording light transmission 9.5
Repeat tests ..... 9.9, A.9.9.3(2)
Specimen loading 9.4
Specimen mass 9.8
Summary of 1.3.1, A.1.3.1.6
Test termination 9.7, A.9.7.2
Protective equipment 4.8.5, 5.3.1

-R-

Radiator cones 4.3.1, A.4.3.1.3, A.4.3.1.4
Calibration of 7.8, 7.10.1, A.7.8.4
Corrosion of A.7.10.1
Framework for support of 4.3.2
Heating element 4.3.1.1, 4.3.1.4, A.4.3.1.4, A.7.10.1
Irradiance control 4.3.1.3, A.4.3.1.3
Radiator shields 7.8.3, 7.8.6, 9.7.3
Construction 4.3.3.1
Mobility of (handle for) 4.3.3.2, A.4.3.3.2
Range-extension filters 4.5.3.2.2, 7.3.2, 7.5, 7.10.1
Recorders
For heat flux meters 4.3.4.2, A.4.3.4.2
For photodetectors 4.8.6
References ..... Chap. 2, D.4, Annex E
Refractory fiber blanket 4.3.5.1
Repeatability B.1, C.2.3
Reports ..... Chap. 11
Descriptive information 11.1
For mass optical density test D.1.7
Test results 11.2
Reproducibility B.1, C.2.4

-S-

Safety 5.3, A.5.3
Samples
Definition 3.3.6
Face of 6.2
Suitability for testing 6.1
Thickness of 1.3.3.3, 6.5.2, A.1.3.3.3, A.6.5.2
Variations in ..... 1.3.3.2 to 1.3.3.4, A.1.3.3.2, A.1.3.3.4
Sensitivity to 6.1.2
Scope of standard 1.1, A.1.1.8, A.1.1.10
Self-ignition (definition) 3.3.7
Shall (definition) 3.2.1
Significance of standard ..... 1.3.2, A.1.3.2.1 to A.1.3.2.3
Smoke density chamber test D.3
Factors influencing D.3.4
Features of D.3.3
Smoke obscuration 1.3.3.8, D.2
Correlation between test methods D.2.4
Definition 3.3.8
Measurement test methods D.2.2, D.2.3
Prediction of 1.3.2.3, A.1.3.2.3
Specific optical density 1.3.2.1, 1.3.2.2, 1.3.3.6, A.1.3.2.1, A.1.3.2.2, A.1.3.3.6, D.3.3.7
Calculation of 10.1
Variability of test C.2
Specimen holders 4.3.5, 4.7.4, A.4.3.5.3.1
Specimens ..... 1.3.1.2, Chap. 6
Additional ..... 6.4, 9.9.3, 9.9.8, A.9.9.3(2)
Conditioning ..... Chap. 8
Face of 6.2
Loading 9.4
Mass 9.8
For mass optical density test D.1.2
Number of ..... 6.3, 9.9.3, 9.9.4, A.6.3, A.9.9.3(2)
Preparation of 6.6
Size of 6.5, A.6.5.2
Suitability for testing 6.1
Wrapping 6.7

-T-

Test, behavior during 1.3.3.1
Test apparatus ..... Chap. 4
Cleaning 4.7, 7.9, A.4.7, A.7.9
Equipment in ..... 4.1 to 4.5, 4.8, A.4.8.7
Setup/calibration of 7.1, A.7.1
Burner calibration 7.7, A.7.7
Chamber leakage rate test 7.6
Compensating filter selection 7.3, A.7.3
Frequency of 7.10, A.7.10.1
Linearity check 7.4
Photometric system alignment 7.2, A.7.2.2.2, A.7.2.2.3
Radiator cone calibration 7.8, A.7.8.4
Range-extension filter calibration 7.5
Total system 7.11, A.7.11
Test chamber ..... 4.2, A.4.2.2 to A.4.2.6
Checking/calibration of 7.10.1
Fabrication 4.2.1
Leakage of 4.6, 7.10.1, A.4.6
Leakage rate test 7.6
Test environment ..... Chap. 5
Test procedure ..... *see* Procedure
Thermocouple junction 4.2.7
Thermocouples 4.3.1.3, 4.8.7, A.4.3.1.3, A.4.8.7
Thermometers 4.8.7, A.4.8.7
Time to ignition (definition) 3.3.9
Timing device 4.8.2

-U-

Units of measurement 1.4
Use of standard ..... 1.3.2, A.1.3.2.1 to A.1.3.2.3

-V-

Venting 4.2.5, 9.1.3, A.9.1.3
Combustion products 5.2
Posttest 9.7.4
Viewing windows, cleaning 4.7.2

-W-

Walls, cleaning 1.3.3.4, 4.7.3, 7.9, 9.1.3.1, 9.1.3.2, A.1.3.3.4, A.4.7.3, A.7.9
Water circulating devices 4.8.8
Water supply 7.8.1.2, 7.8.4, A.7.8.4

Copyright National Fire Protection Association
Provided by IHS under license with NFPA
No reproduction or networking permitted without license from IHS
Not for Resale

Sequence of Events Leading to Issuance of an NFPA Committee Document

Step 1: Call for Proposals

- Proposed new Document or new edition of an existing Document is entered into one of two yearly revision cycles, and a Call for Proposals is published.

Step 2: Report on Proposals (ROP)

- Committee meets to act on Proposals, to develop its own Proposals, and to prepare its Report.
- Committee votes by written ballot on Proposals. If two-thirds approve, Report goes forward. Lacking two-thirds approval, Report returns to Committee.
- Report on Proposals (ROP) is published for public review and comment.

Step 3: Report on Comments (ROC)

- Committee meets to act on Public Comments to develop its own Comments, and to prepare its report.
- Committee votes by written ballot on Comments. If two-thirds approve, Report goes forward. Lacking two-thirds approval, Report returns to Committee.
- Report on Comments (ROC) is published for public review.

Step 4: Technical Report Session

- "*Notices of intent to make a motion"* are filed, are reviewed, and valid motions are certified for presentation at the Technical Report Session. ("Consent Documents" that have no certified motions bypass the Technical Report Session and proceed to the Standards Council for issuance.)
- NFPA membership meets each June at the Annual Meeting Technical Report Session and acts on Technical Committee Reports (ROP and ROC) for Documents with "certified amending motions."
- Committee(s) vote on any amendments to Report approved at NFPA Annual Membership Meeting.

Step 5: Standards Council Issuance

- Notification of intent to file an appeal to the Standards Council on Association action must be filed within 20 days of the NFPA Annual Membership Meeting.
- Standards Council decides, based on all evidence, whether or not to issue Document or to take other action, including hearing any appeals.

Committee Membership Classifications

The following classifications apply to Technical Committee members and represent their principal interest in the activity of the committee.

M *Manufacturer:* A representative of a maker or marketer of a product, assembly, or system, or portion thereof, that is affected by the standard.

U *User:* A representative of an entity that is subject to the provisions of the standard or that voluntarily uses the standard.

I/M *Installer/Maintainer:* A representative of an entity that is in the business of installing or maintaining a product, assembly, or system affected by the standard.

L *Labor:* A labor representative or employee concerned with safety in the workplace.

R/T *Applied Research/Testing Laboratory:* A representative of an independent testing laboratory or independent applied research organization that promulgates and/or enforces standards.

E *Enforcing Authority:* A representative of an agency or an organization that promulgates and/or enforces standards.

I *Insurance:* A representative of an insurance company, broker, agent, bureau, or inspection agency.

C *Consumer:* A person who is, or represents, the ultimate purchaser of a product, system, or service affected by the standard, but who is not included in the *User* classification.

SE *Special Expert:* A person not representing any of the previous classifications, but who has a special expertise in the scope of the standard or portion thereof.

NOTES;
1. "Standard" connotes code, standard, recommended practice, or guide.
2. A representative includes an employee.
3. While these classifications will be used by the Standards Council to achieve a balance for Technical Committees, the Standards Council may determine that new classifications of members or unique interests need representation in order to foster the best possible committee deliberations on any project. In this connection, the Standards Council may make appointments as it deems appropriate in the public interest, such as the classification of "Utilities" in the National Electrical Code Committee.
4. Representatives of subsidiaries of any group are generally considered to have the same classification as the parent organization.

Copyright National Fire Protection Association
Provided by IHS under license with NFPA
No reproduction or networking permitted without license from IHS
Not for Resale

NFPA Technical Committee Document Proposal Form

NOTE: All Proposals must be received by 5:00 pm EST/EDST on the published Proposal Closing Date.

For further information on the standards-making process, please contact the Codes and Standards Administration at 617-984-7249 or visit www.nfpa.org/codes.

For technical assistance, please call NFPA at 1-888-344-3555.

FOR OFFICE USE ONLY

Log #:

Date Rec'd:

Please indicate in which format you wish to receive your ROP/ROC ☐ **electronic** ☐ **paper** ☒ **download**
(Note: If choosing the download option, you must view the ROP/ROC from our website; no copy will be sent to you.)

Date April 1, 200X **Name** John J. Doe **Tel. No.** 716-555-1234

Company Air Canada Pilot's Association

Street Address 123 Summer Street Lane **City** Lewiston **State** NY **Zip** 14092

Please indicate organization represented (if any)

1. (a) NFPA Document Title National Fuel Gas Code **NFPA No. & Year** 54, 200X Edition

(b) Section/Paragraph 3.3

2. Proposal Recommends (check one): ☐ new text ☒ revised text ☐ deleted text

3. Proposal (include proposed new or revised wording, or identification of wording to be deleted): [Note: Proposed text should be in legislative format; i.e., use underscore to denote wording to be inserted (inserted wording) and strike-through to denote wording to be deleted (~~deleted wording~~).]

Revise definition of effective ground-fault current path to read:

3.3.78 Effective Ground-Fault Current Path. An intentionally constructed, permanent, low impedance electrically conductive path designed and intended to carry ~~underground~~ electric fault current ~~conditions~~ from the point of a ground fault on a wiring system to the electrical supply source.

4. Statement of Problem and Substantiation for Proposal: (Note: State the problem that would be resolved by your recommendation; give the specific reason for your Proposal, including copies of tests, research papers, fire experience, etc. If more than 200 words, it may be abstracted for publication.)

Change uses proper electrical terms.

5. Copyright Assignment

(a) ☐ **I am the author of the text or other material (such as illustrations, graphs) proposed in this Proposal.**

(b) ☒ **Some or all of the text or other material proposed in this Proposal was not authored by me. Its source is as follows** (please identify which material and provide complete information on its source)**:**

ABC Co.

I agree that any material that I author, either individually or with others, in connection with work performed by an NFPA Technical Committee shall be considered to be works made for hire for the NFPA. To the extent that I retain any rights in copyright as to such material, or as to any other material authored by me that I submit for the use of an NFPA Technical Committee in the drafting of an NFPA code, standard, or other NFPA document, I hereby grant and assign all and full rights in copyright to the NFPA. I further agree and acknowledge that I acquire no rights in any publication of the NFPA and that copyright and all rights in materials produced by NFPA Technical Committees are owned by the NFPA and that the NFPA may register copyright in its own name.

Signature (Required)

PLEASE USE SEPARATE FORM FOR EACH PROPOSAL • NFPA Fax: (617) 770-3500

Mail to: Secretary, Standards Council, National Fire Protection Association, 1 Batterymarch Park, Quincy, MA 02169-7471

6/8/2007

SAMPLE

Copyright National Fire Protection Association
Provided by IHS under license with NFPA
No reproduction or networking permitted without license from IHS
Not for Resale

NFPA Technical Committee Document Proposal Form

NOTE: All Proposals must be received by 5:00 pm EST/EDST on the published Proposal Closing Date.

For further information on the standards-making process, please contact the Codes and Standards Administration at 617-984-7249 or visit www.nfpa.org/codes.

For technical assistance, please call NFPA at 1-888-344-3555.

FOR OFFICE USE ONLY

Log #: _____

Date Rec'd: _____

Please indicate in which format you wish to receive your ROP/ROC ☐ electronic ☐ paper ☐ download
(Note: If choosing the download option, you must view the ROP/ROC from our website; no copy will be sent to you.)

Date _____ **Name** _____ **Tel. No.** _____

Company _____

Street Address _____ **City** _____ **State** _____ **Zip** _____

Please indicate organization represented (if any) _____

1. (a) NFPA Document Title _____ **NFPA No. & Year** _____

(b) Section/Paragraph _____

2. Proposal Recommends (check one): ☐ new text ☐ revised text ☐ deleted text

3. Proposal (include proposed new or revised wording, or identification of wording to be deleted): [Note: Proposed text should be in legislative format; i.e., use underscore to denote wording to be inserted (inserted wording) and strike-through to denote wording to be deleted (~~deleted wording~~).]

4. Statement of Problem and Substantiation for Proposal: (Note: State the problem that would be resolved by your recommendation; give the specific reason for your Proposal, including copies of tests, research papers, fire experience, etc. If more than 200 words, it may be abstracted for publication.)

5. Copyright Assignment

(a) ☐ I am the author of the text or other material (such as illustrations, graphs) proposed in this Proposal.

(b) ☐ Some or all of the text or other material proposed in this Proposal was not authored by me. Its source is as follows (please identify which material and provide complete information on its source)**:**

_____

I agree that any material that I author, either individually or with others, in connection with work performed by an NFPA Technical Committee shall be considered to be works made for hire for the NFPA. To the extent that I retain any rights in copyright as to such material, or as to any other material authored by me that I submit for the use of an NFPA Technical Committee in the drafting of an NFPA code, standard, or other NFPA document, I hereby grant and assign all and full rights in copyright to the NFPA. I further agree and acknowledge that I acquire no rights in any publication of the NFPA and that copyright and all rights in materials produced by NFPA Technical Committees are owned by the NFPA and that the NFPA may register copyright in its own name.

Signature (Required) _____

PLEASE USE SEPARATE FORM FOR EACH PROPOSAL • NFPA Fax: (617) 770-3500

Mail to: Secretary, Standards Council, National Fire Protection Association, 1 Batterymarch Park, Quincy, MA 02169-7471

6/8/2007

Copyright National Fire Protection Association
Provided by IHS under license with NFPA
No reproduction or networking permitted without license from IHS
Not for Resale