NFPA 269

Standard Test Method for Developing Toxic Potency Data for Use in Fire Hazard Modeling

2007 Edition

NFPA, 1 Batterymarch Park, Quincy, MA 02169-7471
An International Codes and Standards Organization

Copyright National Fire Protection Association
Provided by IHS under license with NFPA
No reproduction or networking permitted without license from IHS
Not for Resale

IMPORTANT NOTICES AND DISCLAIMERS CONCERNING NFPA DOCUMENTS

NOTICE AND DISCLAIMER OF LIABILITY CONCERNING THE USE OF NFPA DOCUMENTS

NFPA codes, standards, recommended practices, and guides, of which the document contained herein is one, are developed through a consensus standards development process approved by the American National Standards Institute. This process brings together volunteers representing varied viewpoints and interests to achieve consensus on fire and other safety issues. While the NFPA administers the process and establishes rules to promote fairness in the development of consensus, it does not independently test, evaluate, or verify the accuracy of any information or the soundness of any judgments contained in its codes and standards.

The NFPA disclaims liability for any personal injury, property or other damages of any nature whatsoever, whether special, indirect, consequential or compensatory, directly or indirectly resulting from the publication, use of, or reliance on this document. The NFPA also makes no guaranty or warranty as to the accuracy or completeness of any information published herein.

In issuing and making this document available, the NFPA is not undertaking to render professional or other services for or on behalf of any person or entity. Nor is the NFPA undertaking to perform any duty owed by any person or entity to someone else. Anyone using this document should rely on his or her own independent judgment or, as appropriate, seek the advice of a competent professional in determining the exercise of reasonable care in any given circumstances.

The NFPA has no power, nor does it undertake, to police or enforce compliance with the contents of this document. Nor does the NFPA list, certify, test or inspect products, designs, or installations for compliance with this document. Any certification or other statement of compliance with the requirements of this document shall not be attributable to the NFPA and is solely the responsibility of the certifier or maker of the statement.

Copyright National Fire Protection Association
Provided by IHS under license with NFPA
No reproduction or networking permitted without license from IHS
Not for Resale

ADDITIONAL NOTICES AND DISCLAIMERS

Updating of NFPA Documents

Users of NFPA codes, standards, recommended practices, and guides should be aware that these documents may be superseded at any time by the issuance of new editions or may be amended from time to time through the issuance of Tentative Interim Amendments. An official NFPA document at any point in time consists of the current edition of the document together with any Tentative Interim Amendments and any Errata then in effect. In order to determine whether a given document is the current edition and whether it has been amended through the issuance of Tentative Interim Amendments or corrected through the issuance of Errata, consult appropriate NFPA publications such as the National Fire Codes® Subscription Service, visit the NFPA website at www.nfpa.org, or contact the NFPA at the address listed below.

Interpretations of NFPA Documents

A statement, written or oral, that is not processed in accordance with Section 6 of the Regulations Governing Committee Projects shall not be considered the official position of NFPA or any of its Committees and shall not be considered to be, nor be relied upon as, a Formal Interpretation.

Patents

The NFPA does not take any position with respect to the validity of any patent rights asserted in connection with any items which are mentioned in or are the subject of NFPA codes, standards, recommended practices, and guides, and the NFPA disclaims liability for the infringement of any patent resulting from the use of or reliance on these documents. Users of these documents are expressly advised that determination of the validity of any such patent rights, and the risk of infringement of such rights, is entirely their own responsibility.

NFPA adheres to applicable policies of the American National Standards Institute with respect to patents. For further information contact the NFPA at the address listed below.

Law and Regulations

Users of these documents should consult applicable federal, state, and local laws and regulations. NFPA does not, by the publication of its codes, standards, recommended practices, and guides, intend to urge action that is not in compliance with applicable laws, and these documents may not be construed as doing so.

Copyrights

This document is copyrighted by the NFPA. It is made available for a wide variety of both public and private uses. These include both use, by reference, in laws and regulations, and use in private self-regulation, standardization, and the promotion of safe practices and methods. By making this document available for use and adoption by public authorities and private users, the NFPA does not waive any rights in copyright to this document.

Use of NFPA documents for regulatory purposes should be accomplished through adoption by reference. The term "adoption by reference" means the citing of title, edition, and publishing information only. Any deletions, additions, and changes desired by the adopting authority should be noted separately in the adopting instrument. In order to assist NFPA in following the uses made of its documents, adopting authorities are requested to notify the NFPA (Attention: Secretary, Standards Council) in writing of such use. For technical assistance and questions concerning adoption of NFPA documents, contact NFPA at the address below.

For Further Information

All questions or other communications relating to NFPA codes, standards, recommended practices, and guides and all requests for information on NFPA procedures governing its codes and standards development process, including information on the procedures for requesting Formal Interpretations, for proposing Tentative Interim Amendments, and for proposing revisions to NFPA documents during regular revision cycles, should be sent to NFPA headquarters, addressed to the attention of the Secretary, Standards Council, NFPA, 1 Batterymarch Park, P.O. Box 9101, Quincy, MA 02269-9101.

For more information about NFPA, visit the NFPA website at www.nfpa.org.

Copyright National Fire Protection Association
Provided by IHS under license with NFPA
No reproduction or networking permitted without license from IHS
Not for Resale

Copyright © 2006 National Fire Protection Association. All Rights Reserved.

NFPA 269

Standard Test Method for

Developing Toxic Potency Data for Use in Fire Hazard Modeling

2007 Edition

This edition of NFPA 269, *Standard Test Method for Developing Toxic Potency Data for Use in Fire Hazard Modeling*, was prepared by the Technical Committee on Fire Tests. It was issued by the Standards Council on July 28, 2006, with an effective date of August 17, 2006, and supersedes all previous editions.

This edition of NFPA 269 was approved as an American National Standard on August 17, 2006.

Origin and Development of NFPA 269

The first edition of NFPA 269 was published in 1996. It was desirable to establish a standard test method for the development of data for use in toxic hazard modeling. The basis of this standard was derived from much work completed by the National Institute of Standards and Technology. The 2000 edition was a reconfirmation of the earlier edition. The 2007 edition is a complete revision for compliance with the *Manual of Style for NFPA Technical Committee Documents*.

--`,,```,,,,````-`-`,,`,,`,`,,`---

Copyright National Fire Protection Association
Provided by IHS under license with NFPA
No reproduction or networking permitted without license from IHS

Not for Resale

Technical Committee on Fire Tests

William E. Fitch, *Chair*
Phyrefish Enterprises, Incorporated, FL [SE]

Barry L. Badders, Jr., Southwest Research Institute, TX [RT]
Jesse J. Beitel, Hughes Associates, Incorporated, MD [SE]
April L. Berkol, Starwood Hotels & Resorts Worldwide, Incorporated, NY [U]
Rep. American Hotel & Lodging Association
Robert G. Bill, Jr., FM Global, MA [I]
John A. Blair, The DuPont Company, DE [M]
Rep. Society of the Plastics Industry, Incorporated
Gordon H. Damant, Inter-City Testing & Consulting Corporation of California, CA [SE]
Thomas W. Fritz, Armstrong World Industries, Incorporated, PA [M]
Pravinray D. Gandhi, Underwriters Laboratories Incorporated, IL [RT]
Gordon E. Hartzell, Hartzell Consulting, Incorporated, TX [SE]
Marcelo M. Hirschler, GBH International, CA [SE]
Alfred J. Hogan, Reedy Creek Improvement District, FL [E]
Rep. International Fire Marshals Association
William E. Koffel, Koffel Associates, Incorporated, MD [SE]
James R. Lawson, U.S. National Institute of Standards and Technology, MD [RT]
Rodney A. McPhee, Canadian Wood Council, Canada [M]
Frederick W. Mowrer, University of Maryland, MD [SE]
David T. Sheppard, U.S. Department of Justice, MD [RT]
Kuma Sumathipala, American Forest & Paper Association, DC [M]
T. Hugh Talley, Hugh Talley Company, TN [M]
Rep. Upholstered Furniture Action Council
Rick Thornberry, The Code Consortium, Incorporated, CA [SE]
William A. Webb, Schirmer Engineering Corporation, IL [I]
Robert A. Wessel, Gypsum Association, DC [M]
Robert J. Wills, American Iron and Steel Institute, AL [M]

Alternates

Robert M. Berhinig, Underwriters Laboratories Incorporated, IL [RT]
(Alt. to P. D. Gandhi)
Delbert F. Boring, Jr., American Iron and Steel Institute, OH [M]
(Alt. to R. J. Wills)
Richard J. Davis, FM Global, MA [I]
(Alt. to R. G. Bill, Jr.)
Sam W. Francis, American Forest & Paper Association, PA [M]
(Alt. to K. Sumathipala)
Richard G. Gann, U.S. National Institute of Standards and Technology, MD [RT]
(Alt. to J. R. Lawson)
Paul A. Hough, Armstrong World Industries, Incorporated, PA [M]
(Alt. to T. W. Fritz)
Marc L. Janssens, Southwest Research Institute, TX [RT]
(Alt. to B. L. Badders, Jr.)
James K. Lathrop, Koffel Associates, Incorporated, CT [SE]
(Alt. to W. E. Koffel)
James A. Milke, University of Maryland, MD [SE]
(Alt. to F. W. Mowrer)
Arthur J. Parker, Hughes Associates, Incorporated, MD [SE]
(Alt. to J. J. Beitel)
Ineke Van Zeeland, Canadian Wood Council, Canada [M]
(Alt. to R. A. McPhee)
Joe Ziolkowski, American Furniture Manufacturers Association, NC [M]
(Alt. to T. H. Talley)

Nonvoting

Robert H. Barker, American Fiber Manufacturers Association, VA [M]
Rep. American Fiber Manufacturers Association
Rohit Khanna, U.S. Consumer Product Safety Commission, MD [C]

Milosh T. Puchovsky, NFPA Staff Liaison

This list represents the membership at the time the Committee was balloted on the final text of this edition. Since that time, changes in the membership may have occurred. A key to classifications is found at the back of the document.

NOTE: Membership on a committee shall not in and of itself constitute an endorsement of the Association or any document developed by the committee on which the member serves.

Committee Scope: This Committee shall have primary responsibility for documents on fire testing procedures, for reviewing existing fire test standards and recommending appropriate action to NFPA, for recommending the application of and advising on the interpretation of acceptable test standards for fire problems of concern to NFPA technical committees and members, and for acting in a liaison capacity between NFPA and the committees of other organizations writing fire test standards. This Committee does not cover fire tests that are used to evaluate extinguishing agents, devices, or systems.

--`,,```,,,,````-`-`,,`,,`,`,,`---
Copyright National Fire Protection Association
Provided by IHS under license with NFPA
No reproduction or networking permitted without license from IHS
Not for Resale

Contents

Chapter 1 Administration **269–** 4
1.1 Scope **269–** 4
1.2 Purpose **269–** 4

Chapter 2 Referenced Publications **269–** 4
2.1 General **269–** 4
2.2 NFPA Publications. (Reserved) **269–** 4
2.3 Other Publications **269–** 4
2.4 References for Extracts in Mandatory Sections. (Reserved) **269–** 5

Chapter 3 Definitions **269–** 5
3.1 General **269–** 5
3.2 NFPA Official Definitions **269–** 5
3.3 General Definitions **269–** 5

Chapter 4 Test Method **269–** 5
4.1 Summary of Test Method **269–** 5

Chapter 5 Test Apparatus **269–** 5
5.1 Effluent Collection and Animal Exposure Chamber **269–** 5
5.2 Chimney **269–** 6
5.3 Smoke Shutter **269–** 6
5.4 Combustion Cell **269–** 7
5.5 Radiant Heaters **269–** 8
5.6 Temperature Controller **269–** 8
5.7 Heat Flux Meter **269–** 8
5.8 Igniter **269–** 8
5.9 Specimen Holder **269–** 9
5.10 Load Cell **269–** 9
5.11 Gas Sampling **269–** 9
5.12 Data Collection **269–**10
5.13 Animal Restrainers **269–**10

Chapter 6 Hazards **269–**10
6.1 Safety Precautions **269–**10
6.2 Venting System for Exposure Chamber **269–**10

Chapter 7 Material Test Specimens **269–**10
7.1 Test Specimens **269–**10
7.2 Conditioning **269–**10

Chapter 8 Test Animals **269–**10
8.1 Test Animal Specifications **269–**10
8.2 Maintenance and Care **269–**11
8.3 Quarantine Period **269–**11
8.4 Housing **269–**11
8.5 Weighing **269–**11
8.6 Exposure **269–**11
8.7 After Testing **269–**11

Chapter 9 Equipment Calibration **269–**11
9.1 Calibration of the Apparatus **269–**11
9.2 Heat Flux Calibration **269–**11
9.3 Gas Analyzer Calibration **269–**11
9.4 Load Cell Calibration **269–**11
9.5 Calibration of the Temperature Controller **269–**11

Chapter 10 Procedures **269–**12
10.1 General **269–**12
10.2 Preparation for Tests **269–**12
10.3 Test Procedure **269–**12

Chapter 11 Calculation **269–**13
11.1 General **269–**13
11.2 Equations **269–**13

Chapter 12 Analysis **269–**13
12.1 Report **269–**13
12.2 Gas Analysis Data **269–**13
12.3 Calculations **269–**13
12.4 Best Overall Predicted LC_{50} Value **269–**14
12.5 Report **269–**14

Annex A Explanatory Material **269–**14

Annex B Commentary **269–**14

Annex C Precision and Bias **269–**17

Annex D Informational References **269–**17

Index **269–**18

Copyright National Fire Protection Association
Provided by IHS under license with NFPA
No reproduction or networking permitted without license from IHS
Not for Resale

NFPA 269

Standard Test Method for

Developing Toxic Potency Data for Use in Fire Hazard Modeling

2007 Edition

IMPORTANT NOTE: This NFPA document is made available for use subject to important notices and legal disclaimers. These notices and disclaimers appear in all publications containing this document and may be found under the heading "Important Notices and Disclaimers Concerning NFPA Documents." They can also be obtained on request from NFPA or viewed at www.nfpa.org/disclaimers.

NOTICE: An asterisk (*) following the number or letter designating a paragraph indicates that explanatory material on the paragraph can be found in Annex A.

Information on referenced publications can be found in Chapter 2 and Annex D.

Chapter 1 Administration

1.1* Scope.

1.1.1 This test method is intended to provide a means for assessing the lethal toxic potency of combustion products produced from a material or product ignited when exposed to a radiant flux.

1.1.2 This test method has been designed to generate toxic potency data on materials and products (including composites) for use in fire hazard analysis. It is also permitted to be used to assist in the research and development of materials and products.

1.1.3 Lethal toxic potency values associated with 30-minute exposures are predicted using calculations that employ combustion atmospheric analytical data for carbon monoxide, carbon dioxide, oxygen (vitiation), and, if present, hydrogen cyanide, hydrogen chloride, and hydrogen bromide. The calculation method is therefore limited to those materials and products whose smoke toxicity can be attributed to these toxicants.

1.1.4 Specimens are exposed to a radiant heating flux with an electric spark ignition.

1.1.5 Specimens tested are representative of finished products, including composite and combination systems.

1.1.6 This standard is not intended to address all safety issues associated with its use. It is the responsibility of the user of this standard to establish appropriate safety and health practices and to determine the applicability of regulatory limitations (especially with regard to the institutional care and use of experimental test animals) prior to use. *(For specific hazard requirements, see Section 6.1.)*

1.2 Purpose.

1.2.1 This test method is intended to provide data for the mathematical modeling of fire hazard as a means for the evaluation of materials and products.

1.2.2 This test method shall be used to predict, and subsequently confirm, the lethal toxic potency of smoke produced upon exposure of a material or product to specific fire test conditions. Confirmation determines whether certain major gaseous toxicants account for the observed toxic effects as well as the lethal toxic potency. If a predicted lethal toxic potency value is not adequately confirmed, indicating the potential for unusual or unexplained toxicity due to other components, the lethal toxic potency shall be investigated using other methodology, such as conducting an experimental determination of the LC_{50} using the apparatus described. *(See B.3.1 and B.3.2.)*

1.2.3 This test method produces lethal toxic potency data that shall be considered appropriate for use in modeling the hazard of both preflashover and postflashover fires. Most fire deaths due to smoke inhalation in the United States occur in areas other than the room of fire origin and are caused by fires that have proceeded beyond the room of fire origin. It is assumed that these fires typically are flashover fires. Therefore, the principal emphasis is placed on evaluating toxic hazard under these conditions. In postflashover fires, large concentrations of carbon monoxide result from a reduced air supply to the fire plume. Because bench-scale tests do not have the capability to simulate this phenomenon, the lethal toxic potencies determined in this test method shall require adjustment for use in modeling the hazard from postflashover conditions *(see 11.2.3)*. For preflashover conditions, the LC_{50} values derived from this method shall be permitted to be used as toxic potency data without adjustment.

1.2.4 Lethal toxic potency values determined in this test method exhibit a degree of uncertainty where used to predict real-scale toxic potencies. *(See B.4.2.)*

1.2.5 Tests shall be conducted on small-sized specimens representative of the materials, products, or composites in their intended end use.

1.2.6 This test method does not attempt to address the toxicological significance of changes in particulate or aerosol size, smoke transport, distribution, or deposition or of changes in the concentration of any smoke constituent as a function of time that occurs in an actual fire.

1.2.7 The propensity for smoke from any material, when tested for its effects on a rat, to have the same effects on a human in fire situations shall be inferred only to the extent that a rat can be correlated with a human biologically. *(See B.2.5.)*

1.2.8 This test method shall not be used to assess incapacitation. Incapacitation shall be inferred from lethal toxic potency values.

1.2.9 The effects of sensory irritation are not addressed by this test method.

Chapter 2 Referenced Publications

2.1 General. The documents or portions thereof listed in this chapter are referenced within this standard and shall be considered part of the requirements of this document.

2.2 NFPA Publications. (Reserved)

2.3 Other Publications.

Guide for the Care and Use of Laboratory Animals, Institute of Laboratory Animal Research, Commission on Life Sciences, National Research Council, ISBN: 0-309-05377-3, 1996.

Copyright National Fire Protection Association
Provided by IHS under license with NFPA
No reproduction or networking permitted without license from IHS
Not for Resale

Merriam-Webster's Collegiate Dictionary, 11th edition, Merriam-Webster, Inc., Springfield, MA, 2003.

2.4 References for Extracts in Mandatory Sections. (Reserved)

Chapter 3 Definitions

3.1 General. The definitions contained in this chapter shall apply to the terms used in this standard. Where terms are not defined in this chapter or within another chapter, they shall be defined using their ordinarily accepted meanings within the context in which they are used. *Merriam-Webster's Collegiate Dictionary*, 11th edition, shall be the source for the ordinarily accepted meaning.

3.2 NFPA Official Definitions.

3.2.1 Shall. Indicates a mandatory requirement.

3.2.2 Should. Indicates a recommendation or that which is advised but not required.

3.2.3 Standard. A document, the main text of which contains only mandatory provisions using the word "shall" to indicate requirements and which is in a form generally suitable for mandatory reference by another standard or code or for adoption into law. Nonmandatory provisions shall be located in an appendix or annex, footnote, or fine-print note and are not to be considered a part of the requirements of a standard.

3.3 General Definitions.

3.3.1 Carboxyhemoglobin Saturation. The percent of blood hemoglobin converted to carboxyhemoglobin due to reaction with inhaled carbon monoxide.

3.3.2 Concentration–Time Curve. A plot of the concentration of a gaseous toxicant (μL/L) or of fire effluent ($g \cdot m^{-3}$) as a function of time.

3.3.3 *Ct* Product. The concentration–time product (μL/L/min) obtained by the integration of the area under a concentration–time curve.

3.3.4* Fractional Effective Dose (*FED*). The ratio of the *Ct* product for a gaseous toxicant produced in a given test to that *Ct* product of the toxicant that has been statistically determined from independent experimental data to produce lethality in 50 percent of test animals within a specified exposure and postexposure time.

3.3.5 LC_{50}. A measure of lethal toxic potency measured in units of $g \cdot m^{-3}$; the concentration of gas or fire effluent statistically calculated from concentration response data to produce lethality in 50 percent of test animals within a specified exposure and postexposure time.

3.3.6 Mass Loss Concentration. The mass loss of a test specimen consumed during combustion per unit exposure chamber volume ($g \cdot m^{-3}$).

3.3.7 Postflashover. The stage of a room fire during which average air temperature in the upper half of the room exceeds 600°C.

Chapter 4 Test Method

4.1 Summary of Test Method.

4.1.1 This method shall subject a test specimen of surface area 76 mm × 127 mm or smaller and thickness of 50 mm or less to ignition while exposed to 50 kW/m^2 of radiant heat for 15 minutes.

4.1.2 The effluent produced shall be collected for 30 minutes within a 200 L chamber to which the combustion assembly is joined through a connecting chimney.

4.1.3 Concentrations of the major gaseous toxicants shall be monitored over the 30-minute period, with *Ct* products for each determined from the integration of the areas under the respective concentration–time plots.

4.1.4 The *Ct* product data, along with the mass loss of the test specimen during the test, then shall be used in calculations to predict the 30-minute LC_{50} of the test specimen.

4.1.5 The predicted LC_{50} then shall be confirmed in comparable tests by exposing six rats, restrained for head-only exposure, for 30 minutes to the smoke produced from that mass of the test specimen whose mass loss concentration during the 30-minute period is approximately equivalent to 70 percent ± 10 percent and equivalent to 130 percent of its estimated LC_{50}.

4.1.6* If no more than one rat dies during the 30-minute exposure, or within 14 days postexposure, to the mass loss concentration corresponding to 70 percent of the LC_{50}, and at least five rats die during the 30-minute exposure, or within 14 days postexposure, to the mass loss concentration corresponding to 130 percent of the LC_{50}, the predicted LC_{50} shall be considered to be validated.

4.1.7 For data representing postflashover fires, a correction shall be made for the excess CO generated by ventilation-limited fires.

4.1.8 Although the normal radiant heat flux is 50 kW/m^2, other levels of flux shall be permitted to be used for specific evaluations of other fire scenarios, provided the variation is recorded and reported.

4.1.9 The test method shall also allow for measurements of the time to ignition and the rate of mass loss of the test specimens.

Chapter 5 Test Apparatus

5.1 Effluent Collection and Animal Exposure Chamber.

5.1.1 The effluent collection and animal exposure chamber shall be as shown in Figure 5.1.1(a) and Figure 5.1.1(b) and shall be of a transparent polycarbonate or polymethylmethacrylate material with a nominal volume of 0.2 m^3.

5.1.2 The inside dimensions of the chamber shall be 1220 mm × 370 mm × 450 mm.

5.1.3 The six animal ports, intended for head-only exposure, shall be located in a horizontal row, approximately halfway from the bottom to the top of the chamber, in the front wall.

5.1.4 A plastic bag with a volume of 0.05 m^3 shall be attached to a port at the end of the chamber to provide for gas expansion.

5.1.5 The exposure box shall be equipped with a gas sampling port at the animal nose level in the geometric center of the exposure chamber and with a port for returning gases in the end wall closest to the gas analyzers.

5.1.6 A thermocouple shall be provided to monitor the temperature at the level of the animal ports.

Copyright National Fire Protection Association
Provided by IHS under license with NFPA
No reproduction or networking permitted without license from IHS
Not for Resale

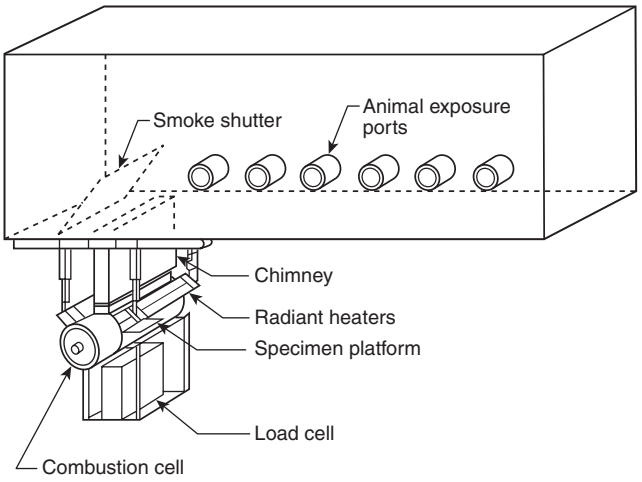

FIGURE 5.1.1(a) General View of Radiant Heat Apparatus.

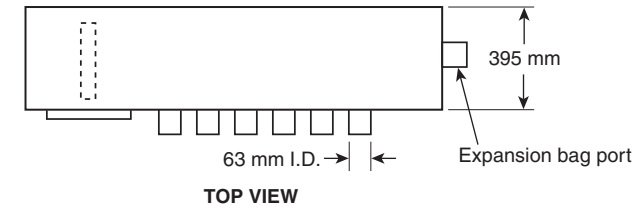

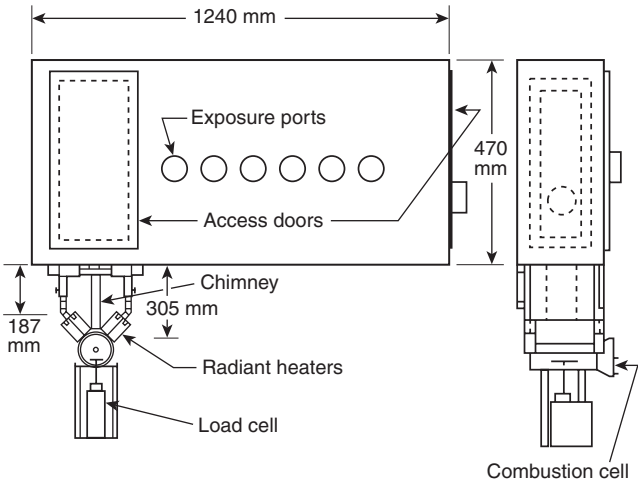

FIGURE 5.1.1(b) Main Dimensions of the Radiant Heat Apparatus.

5.1.7* The exposure chamber shall have two doors: one in the front wall near the connection to the combustion cell and one in the end wall nearest the animal ports.

5.2 Chimney.

5.2.1 The chimney shall be as shown in Figure 5.2.1 and shall be a stainless steel assembly with approximate inside dimensions of 30 mm × 300 mm and approximate width of 300 mm.

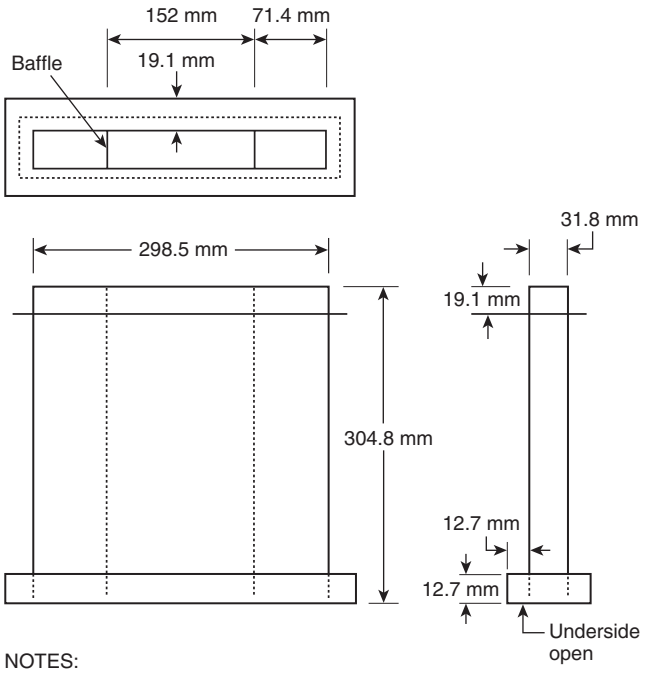

NOTES:
1. Inside measure where applicable.
2. Material is 1.6 mm stainless steel.

FIGURE 5.2.1 The Chimney in the Radiant Heat Apparatus.

5.2.2 The chimney shall connect the combustion cell to the animal exposure chamber.

5.2.3 The chimney shall be divided into three channels by stainless steel dividers.

5.2.4 The center channel shall be approximately 150 mm wide.

5.2.5 The purpose of the channels shall be to induce smoke to travel up through the center portion of the chimney, while air from the animal exposure chamber is drawn down through the outside channels to provide air to the combustion cell.

5.2.6 The chimney shall be connected to the underside of the animal exposure chamber by clamps, allowing its removal for cleaning.

5.2.7 The chimney shall be sealed to the animal chamber by low-density ceramic fiber insulation of nominal 65 kg/m^3.

5.2.8 The other end of the chimney shall be sealed to the combustion cell by an H-shaped trough with a small quantity of the same fiber insulation in the trough *(see 5.2.7)*.

5.3 Smoke Shutter.

5.3.1 The smoke shutter shall be made of stainless steel plate and shall be situated inside the animal exposure chamber.

5.3.2 The shutter shall be positioned so that it closes over the chimney opening.

5.3.3 The shutter shall be hinged and provided with a positive locking mechanism.

5.3.4 The purpose of the shutter shall be to seal the combustion chamber and chimney from the exposure chamber at the end of irradiation.

Copyright National Fire Protection Association
Provided by IHS under license with NFPA
No reproduction or networking permitted without license from IHS
Not for Resale

5.3.5 A wire attached to the shutter and a simple push rod shall be provided to allow the shutter to be closed gently.

5.3.6 A wire attached to a clamp shall lock the shutter in place.

5.3.7 To produce a gastight seal, the underside of the shutter shall be covered with a 12 mm thick blanket of low-density ceramic fiber insulation of nominal 65 kg/m^3, which shall be covered further with stainless steel foil.

5.4 Combustion Cell.

5.4.1 The combustion cell shall be as diagrammed in Figure 5.4.1(a), Figure 5.4.1(b), and Figure 5.4.1(c) and shall be a horizontal quartz tube with a 127 mm inside diameter and a length of approximately 320 mm.

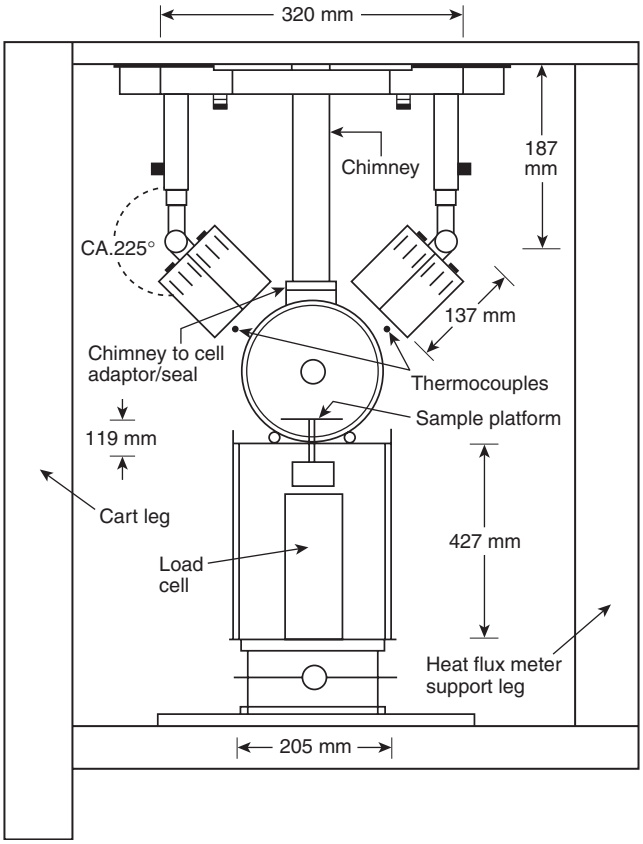

FIGURE 5.4.1(a) End View Showing Dimensions Pertinent to Combustion Cell and Heaters.

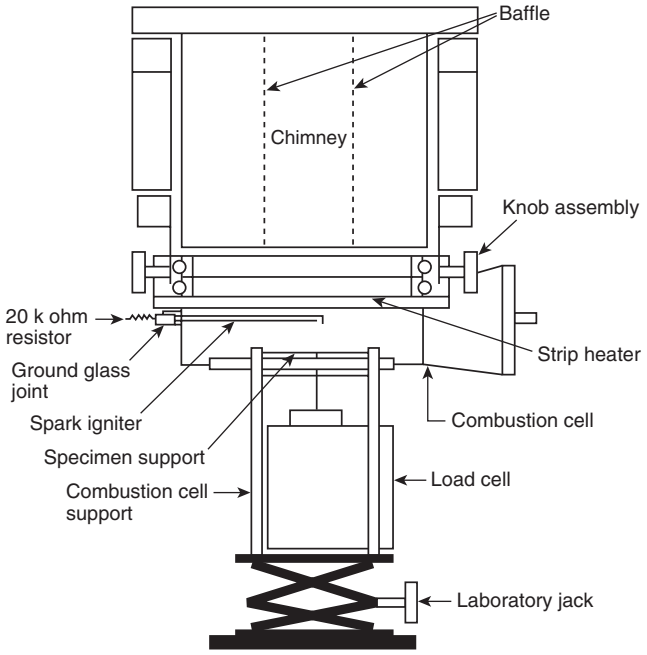

FIGURE 5.4.1(b) Side View of Combustion Cell.

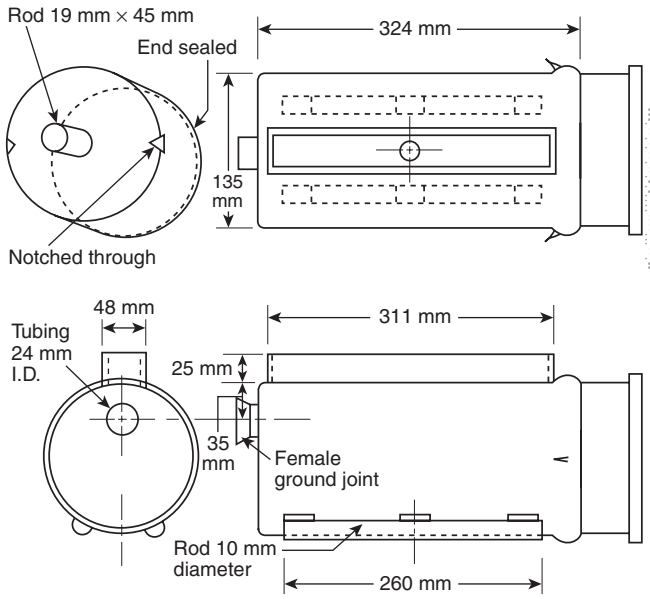

FIGURE 5.4.1(c) Construction Details for the Combustion Cell.

5.4.1.1 The combustion cell shall be sealed at one end and shall have a large standard taper outer joint located at the other end.

5.4.1.2 A sealed inner joint shall serve as a removable plug for the open end *[see Figure 5.4.1(c)]*.

5.4.1.3 The combustion cell shall have a rectangular opening on the top that is parallel to the axis of the cylinder with a "collar" that allows it to fit securely into the chimney.

5.4.1.4 The bottom of the cell shall have a hole for the rod connecting the specimen support platform and the load cell.

5.4.1.5 The sealed end of the combustion cell shall be fitted with a standard tapered glass joint for the electric sparker.

5.4.2 The combustion cell shall be supported by a metal frame that also holds the load cell, as shown in Figure 5.4.1(a) and Figure 5.4.1(b), that monitors mass loss rate.

5.4.2.1 The entire frame shall be supported by a laboratory jack that holds the combustion cell tightly to the chimney

Copyright National Fire Protection Association
Provided by IHS under license with NFPA
No reproduction or networking permitted without license from IHS
Not for Resale

during experimentation and allows the cell to be lowered for removal and cleaning.

5.4.2.2 The load cell shall be located at a fixed distance from the combustion cell.

5.5 Radiant Heaters.

5.5.1 The active element of the heater shall consist of four quartz infrared lamps (with tungsten filaments) rated at 2000 W at 240 V.

5.5.1.1 The lamps (two on each side) shall be encased in water-cooled holders with parabolic reflectors.

5.5.1.2 The water-cooled holders *[see Figure 5.4.1(a)]* shall be attached to adjustable metal frames that allow the lamps to be moved vertically and laterally and to be rotated in such a way as to give a uniform flux field across the sample surface.

5.5.1.3 To keep the lamps from overheating, cooling water shall be circulated through their respective holders.

5.5.2 The irradiance of the lamps shall be held at a preset level.

5.5.2.1 Holding the lamps at a preset level shall be accomplished by using a temperature controller and two type K thermocouples placed between the lamps and the combustion cell.

5.5.2.2 The lamps shall be wired in parallel.

5.5.3 The irradiance from the lamps shall be uniform within the central area of the sample holder to within ±10 percent.

5.5.3.1 The calibration holder that shall be used in determining the uniformity of the radiant field from the lamps is shown in Figure 5.5.3.1.

5.5.3.2 If the field is found to be inadequately uniform, the lamp holders shall be repositioned as necessary.

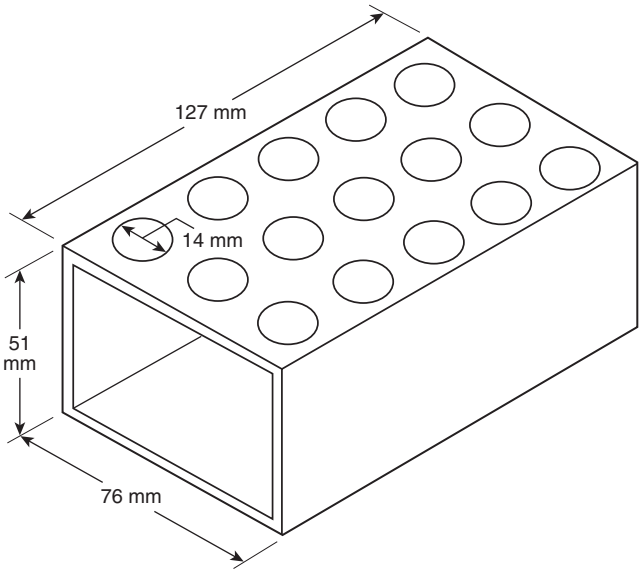

FIGURE 5.5.3.1 Calibration Jig Used for Checking the Uniformity of Irradiance.

5.6 Temperature Controller.

5.6.1 If a temperature controller is used for maintaining the required radiant flux, the output of the quartz lamps shall be controlled by a thermocouple signal to the temperature controller.

5.6.2 The outputs from the two type K thermocouples shall be averaged by means of a parallel-wired connection, and this average value shall be used as the input to the controller.

5.6.3 The temperature controller shall be a three-term type and shall provide an output signal suitable for driving the power controller.

5.6.4 If necessary, the temperature controller also shall incorporate a means for setting the maximum output to prevent the power controller from being driven wide open.

5.6.5 The power controller shall be selected to be compatible with the radiant heat lamps used.

5.7 Heat Flux Meter.

5.7.1 The total heat flux meter shall be of the Schmidt–Boelter (thermopile) type, or equivalent, with a design range of at least 75 kW/m^2.

5.7.1.1 The target receiving radiation shall be flat, circular, approximately 12.5 mm in diameter, and coated with durable matte-black finish.

5.7.1.2 The target shall be water-cooled.

5.7.1.3 The flux meter shall have an accuracy of within ±3 percent and a repeatability within 0.5 percent.

5.7.2 The calibration of the heat flux meter shall be checked periodically.

5.7.2.1 Calibration shall be accomplished most easily by having two flux meters, one used for routine testing and the other used only for calibration purposes.

5.7.3 The flux meter shall be used to calibrate the radiant heaters.

5.7.3.1 The flux meter shall be positioned firmly in a rigid support device to ensure repeatable readings.

5.7.3.2 The surface of the heat flux meter shall be located in a position corresponding to the center of the specimen face. *(Figure 5.5.3.1 shows a calibration bracket suitable for this purpose.)*

5.8 Igniter.

5.8.1 A spark igniter shall be constructed of two 3.2 mm stainless steel rods.

5.8.2 One of these two rods shall be bent at 90 degrees, flattened on the end, and positioned to have the appearance of the tip of an automotive-type spark plug.

5.8.3 The gap between the two rods shall be about 2 mm ± 0.5 mm.

5.8.4 The two rods shall be connected to a high-voltage spark system that uses a 10 kV transformer, as shown in Figure 5.8.4.

5.8.5 To reduce the propagation of radio frequency that could interfere with the instrumentation, a 20,000 Ω, 5 W resistor shall be connected in series with one of the electrodes.

5.8.6 The spark gap shall be positioned approximately 25 mm above the center of the top surface of the specimen, inside the combustion cell.

Copyright National Fire Protection Association
Provided by IHS under license with NFPA
No reproduction or networking permitted without license from IHS
Not for Resale

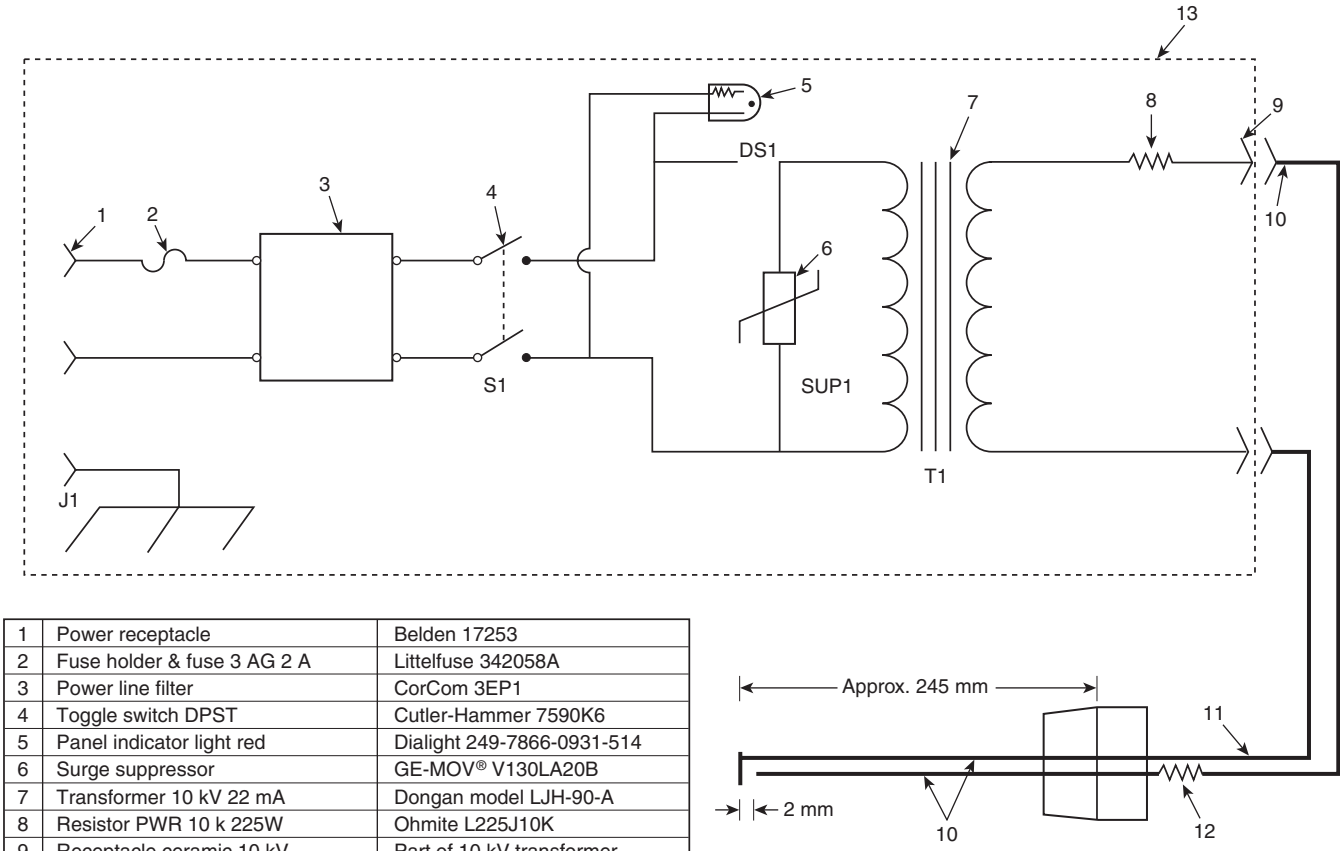

1	Power receptacle	Belden 17253
2	Fuse holder & fuse 3 AG 2 A	Littelfuse 342058A
3	Power line filter	CorCom 3EP1
4	Toggle switch DPST	Cutler-Hammer 7590K6
5	Panel indicator light red	Dialight 249-7866-0931-514
6	Surge suppressor	GE-MOV® V130LA20B
7	Transformer 10 kV 22 mA	Dongan model LJH-90-A
8	Resistor PWR 10 k 225W	Ohmite L225J10K
9	Receptacle ceramic 10 kV	Part of 10 kV transformer
10	3.2 mm diameter SS rods	STD
11	Wire corona res HV	Dearborn 391845
12	Resistor 20 k ohm	STD
13	Cabinet	Bud Futura MD-1962

FIGURE 5.8.4 Power Supply for Spark Ignition.

5.8.7 The rods comprising the spark igniter shall pass through a 29/42 male ground glass stopper, forming a gastight seal with a mating joint in place of the collar on the combustion cell *[see Figure 5.4.1(c)]*.

5.8.8 As an alternate arrangement to 5.8.7, the electrical leads shall be sealed in the glass collar in a gastight manner.

5.9 Specimen Holder.

5.9.1 The specimen holder shall be a stainless steel assembly with approximate inside dimensions of 76 mm × 127 mm and a depth of 50 mm in accordance with Figure 5.9.1.

5.9.2 The specimen shall be backed by a layer of ceramic fiber blanket of nominal 65 kg/m^3 density.

5.9.3 The specimen holder shall be positioned for testing on the specimen platform, inside the combustion cell.

5.10 Load Cell.

5.10.1 The general arrangement of the load cell and specimen holder shall be as illustrated in Figure 5.4.1(b).

5.10.2 The load cell shall be installed under the combustion cell and shall be insulated against the heating effects of the radiant heaters.

5.10.3 The specimen and holder shall be located on a support plate and a rigid rod.

5.10.4 The load cell shall have an accuracy of 0.01 g, and it shall have a measuring range of at least 100 g.

5.11 Gas Sampling.

5.11.1 A gas sampling arrangement shall be as shown in Figure 5.11.1 and shall include a pump, a glass wool filter at the sampling port, a cold trap to remove soot and moisture, and a pressure relief valve that returns all flow required by the CO, CO_2, and O_2 gas analyzers.

5.11.1.1 The flow to the analyzers also shall be returned to the animal exposure chamber through separate return lines.

5.11.1.2 The return lines shall be closed during calibration of the instruments to prevent the accumulation of calibration gases in the animal exposure chamber.

5.11.1.3 Because this is a closed system, gases that are removed for chemical analysis and that can be recirculated to the animal exposure chamber are allowed to be returned.

--`,,```,,,,````-`-`,,`,,`,`,,`---

Copyright National Fire Protection Association
Provided by IHS under license with NFPA
No reproduction or networking permitted without license from IHS
Not for Resale

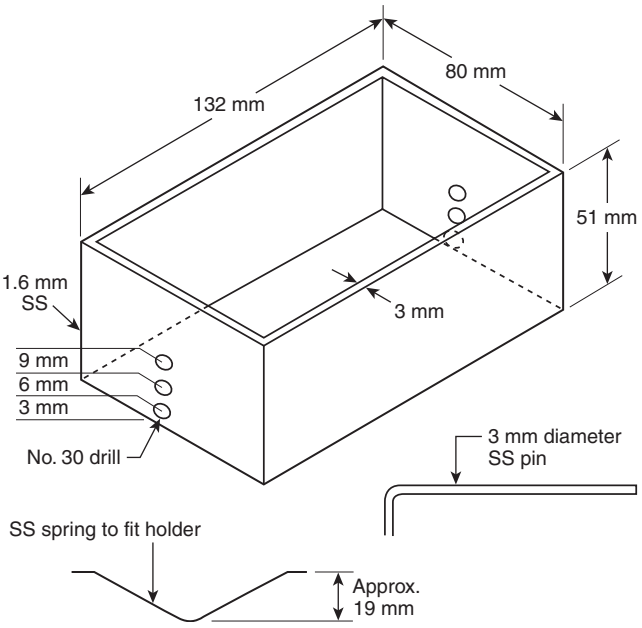

FIGURE 5.9.1 Specimen Holder.

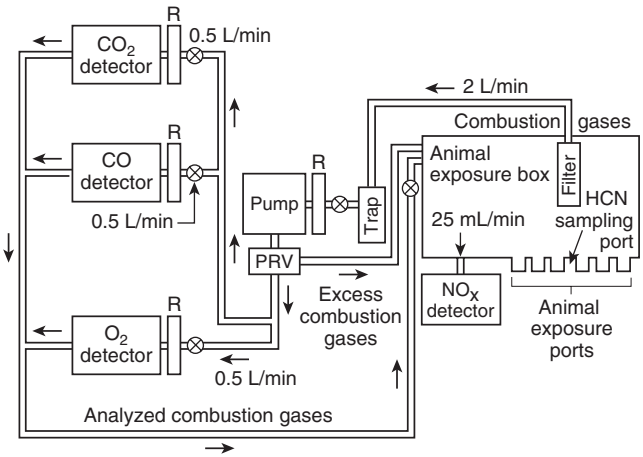

R, rotameter; PRV, pressure relief valve.

FIGURE 5.11.1 Gas Sampling System.

5.11.2 The gas analyzers shall have the following ranges and resolutions:

(1) *Carbon monoxide.* 0 to ≥10,000 ppm; 10 ppm
(2) *Carbon dioxide.* 0 to ≥10 percent; 0.1 percent (vol./vol. percent)
(3) *Oxygen.* 0 to 21 percent; 0.01 percent (vol./vol. percent)

5.11.3 Gas analysis for HCN, HCl, and HBr shall be performed as required by Section 11.1.

5.12 Data Collection. The data collection system shall be capable of recording the output from the gases monitored by the gas analyzer, the thermocouple(s) in the chamber, and the load cell and shall have an accuracy corresponding to 0.01 percent of full-scale instrument output.

5.13* Animal Restrainers. Animal restrainers that are made of aluminum and designed to allow exposure of only the heads of the animals shall be used.

Chapter 6 Hazards

6.1 Safety Precautions. Because the test procedure involves high-temperature and combustion processes, precautions shall be exercised against hazards from burns, eye injuries, ignition of extraneous objects, and inhalation of combustion products.

6.1.1 To avoid accidental leakage of toxic combustion products into the surrounding atmosphere, the entire exposure system shall be placed into a chemical hood or under a canopy hood.

6.1.1.1 If the system is placed under a canopy hood, an accessory exhaust trunk for any combustion gases escaping through the load cell hole on the bottom of the combustion cell shall be required.

6.1.2 An exhaust line to evacuate the exposure box at the end of a test shall be recommended.

6.1.3 The operator shall use safety tongs for removing the specimen holder.

6.1.4 The combustion cell, while hot, shall be handled only with protective gloves.

6.1.5 Due to the intense light from the infrared lamps used, dark safety glasses shall be worn by the operator, or a darkened polymethylmethacrylate or polycarbonate shield shall be placed in front of the combustion cell.

6.2 Venting System for Exposure Chamber. Operation of the venting system for the exposure chamber shall be checked before testing, and it shall discharge into an exhaust system with adequate capacity.

Chapter 7 Material Test Specimens

7.1 Test Specimens. Test specimens shall be cut to an appropriate area and thickness as determined by the procedure described in Section 10.1 so that they are no larger than 76 mm × 127 mm and no more than 50 mm thick, representing the end-use product.

7.1.1 Raw materials (e.g., paints, adhesives, and wall coverings) shall be tested on the substrate to which they are normally applied.

7.1.2 For testing, the specimens shall be wrapped on all sides with either aluminum or stainless steel foil.

7.1.3 The top faces of the specimens shall not be required to be wrapped.

7.2 Conditioning. Test specimens shall be conditioned to moisture equilibrium (constant weight) at an ambient temperature of 23°C ± 3°C and a relative humidity of 50 percent ± 10 percent.

Chapter 8 Test Animals

8.1 Test Animal Specifications.

8.1.1 The test animals shall be inbred 3- to 4-month-old male rats weighing 225 g to 350 g.

Copyright National Fire Protection Association
Provided by IHS under license with NFPA
No reproduction or networking permitted without license from IHS
Not for Resale

8.1.2 The rats shall be obtained from a reputable supplier that certifies the animals are free of major respiratory pathogens.

8.2 Maintenance and Care. The maintenance and care of the animals shall be performed by qualified trained personnel in accordance with the *Guide for the Care and Use of Laboratory Animals.*

8.3 Quarantine Period.

8.3.1 Upon receipt, the animals shall be identified, weighed, and housed in a separate quarantine area for a minimum of 7 days prior to testing.

8.3.2 During the quarantine period, animals shall be observed and weighed daily.

8.3.3 Animals that are unsuitable by reason of health or other criteria shall not be used.

8.3.4 Cage assignments shall be made according to a randomized routine.

8.3.5 Health criteria for eliminating animals from a study shall include any animal weighing outside ±20 percent of the body weight specified in Section 8.1.

8.4 Housing.

8.4.1 The animals shall be housed one animal to a cage.

8.4.2 The environment shall have ventilation and shall be controlled at a temperature of 23°C ± 3°C and a relative humidity of 50 percent ± 15 percent.

8.4.3 The animal room shall have a 12-hour light/dark cycle.

8.5 Weighing. Each animal shall be weighed when received, prior to test, and surviving animals shall be weighed at 7 and 14 days postexposure.

8.6 Exposure. Prior to exposure, the animals shall be weighed and secured in individual restrainers for placement in the animal exposure chamber.

8.7 After Testing. After testing, surviving animals shall be housed in an animal room separate from the pretest animal room for the postexposure observation period.

Chapter 9 Equipment Calibration

9.1 Calibration of the Apparatus. The following parts of the test apparatus shall require calibration:

(1) Radiant heaters
(2) Gas analyzers
(3) Load cell
(4) Temperature controller (if used)

9.2 Heat Flux Calibration.

9.2.1 For heat flux calibration, the heat flux meter shall be secured.

9.2.1.1 The target surface of the flux meter shall be centered at the location corresponding, both horizontally and vertically, to that of the top of the specimen when the specimen holder is in place on the platform.

9.2.1.2 The igniter shall be removed from its position during this procedure.

9.2.1.3 The temperature controller, if used, shall be set to the desired flux temperature and the radiant heat lamps shall be turned on, adjusting the temperature controller until the desired irradiance (i.e., 50 kW/m^2 ± 10 percent) is achieved.

9.2.1.4 If manual control of the heat lamps is used, the calibration curve of the heater controller setting as a function of the time needed to maintain the desired flux level shall be developed.

9.2.2 The orientation of the radiant heat lamps shall be checked whenever the heaters have been moved or a lamp has been replaced, using the following procedure:

(1) The heat flux calibration jig shown in Figure 5.5.3.1 shall be installed.
(2) The top face of the calibration jig shall be positioned at the same height at which the top of a test specimen is placed.
(3) A power setting for the lamps that produces the desired level (i.e., 50 kW/m^2) at the center hole shall be estimated.
(4) The power shall be adjusted and at least 5 minutes shall be allowed for equilibration.
(5) The orientation of the radiant heat lamps shall be adjusted so that no measurement at seven locations across the face of the specimen *(see Figure 5.5.3.1)* deviates by more than 10 percent from the average.

9.3 Gas Analyzer Calibration.

9.3.1 At the beginning of each series of tests, the O_2, CO_2, and CO analyzers shall be calibrated by using nitrogen gas for "zeroing" and an appropriate gas mixture with a full-scale reading that is near to, but less than, that of the analyzer.

9.3.1.1 For all calibrations, the gas shall be set to flow at the same rate and pressure as the sample gas.

9.3.1.2 For calibrating the O_2 analyzer, ambient air (20.9 percent O_2) shall be used, while, for the CO_2 and CO analyzers, bottled gases containing CO_2 and CO at known concentrations shall be used.

9.3.1.3 A single mixture containing both CO and CO_2 shall be permitted to be used.

9.3.1.4 During the calibration procedure, the gas return lines shall be diverted into the exhaust, not into the exposure chamber, to prevent the inadvertent accumulation of CO and CO_2.

9.3.2 The calibration of apparatus for analysis of optional gases (e.g., HCN, HCl, HBr, and NO_2) shall be performed.

9.4 Load Cell Calibration.

9.4.1 The load cell shall be calibrated with standard weights corresponding to the range of test specimens on a regular basis, and when first setting up the apparatus or after making adjustments for sensitivity and range.

9.4.2 Before each test, the load cell shall be checked routinely using at least two analytical quality weights for the full effective range of measurement.

9.4.2.1 Any deviation of the load cell output, as compared to these weights, shall be recorded, and appropriate compensation shall be made for the specimen mass loss readings.

9.5 Calibration of the Temperature Controller.

9.5.1 The following procedure shall be followed when calibrating the temperature controller:

(1) To set up the controller, the flux meter first shall be inserted into its holder so that the sensing surface is at the exact center of where the top of the specimen is placed during normal testing. The lamp shall have been adjusted to obtain a uniform flux field over the sample.

Copyright National Fire Protection Association
Provided by IHS under license with NFPA
No reproduction or networking permitted without license from IHS
Not for Resale

(2) The output of the heat flux meter shall then be connected to a strip chart recorder running at a trace speed that is still fast enough to detect any changes in the flux.
(3)*Using the output from the heat flux meter, the instructions of the controller manufacturer for adjusting the controller shall be followed in order to obtain, as closely as possible, a square wave output from the heat flux meter when the lamps are turned on and then turned off.
(4) Settings that result in an unstable, oscillating output shall be avoided.

9.5.2 If a setting results in an unstable, oscillating output, the solution shall be to limit the maximum output from the slave controller either by using the "load line out" function of the temperature controller, if so equipped, or by installing a voltage divider at the output of the temperature controller.

9.5.2.1 When setting up the controller for the "load line out" function, the thermocouples always shall read room air temperature only.

9.5.2.2 Using the correct adjustment of the temperature controller, 90 percent of the desired flux shall be reached within 2 seconds, with 100 percent flux reached within 20 seconds, and a deviation of within ±5 percent shall be reached for the remainder of the test duration.

Chapter 10 Procedures

10.1* General.

10.1.1 Test procedures for smoke toxicity data initially shall be followed without the exposure of test animals in order to produce analytical data for CO, O_2, CO_2, and, if present, HCN, HCl, and HBr.

10.1.1.1 The choice of specimen size for the initial tests shall be made with consideration of anticipated toxicant yields so that total *FED*s of 0.5 to 1.5 shall be obtained *(see Section 11.1)*.

10.1.1.2 In the absence of appropriate information for such choices, an area equal to ¼ of a maximum area of 9652 mm shall be selected initially.

10.1.1.3 Analytical data from at least two initial tests shall be used for estimation of an average LC_{50} for the test specimen *(see Section 11.1)*.

10.1.2 Comparable tests then shall be conducted, but with the exposure of six rats to the smoke produced from that quantity of the test material whose mass loss concentration during the 30-minute exposure is approximately equivalent to 70 percent ± 10 percent and to 130 percent of its average estimated LC_{50}.

10.1.2.1 If no more than one rat dies during the 30-minute exposure or within 14 days postexposure to the mass loss concentration corresponding to 70 percent of the LC_{50}, and at least five rats die during the 30-minute exposure or within 14 days postexposure to the mass loss concentration corresponding to 130 percent of the LC_{50}, the estimated LC_{50} shall be considered to be validated.

10.1.2.2 If the validation is not successful or if unexplained or unusual toxicity is suspected, other test methods shall be employed or further research will be needed to determine experimentally the lethal toxic potency of the test material.

10.2 Preparation for Tests.

10.2.1 Coolant water for the heat flux meter (at least 750 mL/min) and for the tungsten lamps (at least 600 mL/min) shall be turned on.

10.2.2 Verification that all lines, filters, and traps for the gas analyzers have been serviced and that flow rates are satisfactory shall be made.

10.2.2.1* The moisture trap in the gas analyzer stream shall be checked.

10.2.2.2 A wool filter shall be placed before the gas sampling port.

10.2.3 Operation of the spark ignition circuit shall be verified.

10.2.4 The required calibration procedures specified in Chapter 9 shall be performed.

10.2.4.1 The specimen shall be weighed on a laboratory balance with an accuracy of ±0.01 g.

10.2.4.2 The specimen shall be wrapped in either aluminum or stainless steel foil, leaving the top surface exposed, and the combined weight of the specimen with the foil and after mounting in the specimen holder shall be determined.

10.2.4.3 The correspondence of the load cell readout to the appropriate weight of the specimen plus the holder shall be verified.

10.3 Test Procedure. The test procedure of 10.3.1 through 10.3.11.3 shall be followed.

10.3.1 If animals are to be exposed, they shall be weighed and placed in their restrainers.

10.3.2 The specimen, mounted in the specimen holder, shall be inserted into the combustion cell, and the standard taper plug shall be replaced (no grease or sealant shall be used on the ground glass).

10.3.2.1 The plug shall be secured with wire or springs.

10.3.2.2 Immediately prior to beginning the test, the animals shall be placed into the ports in the exposure chamber.

10.3.2.3 All exposure chamber doors and ports shall be closed if not used for animals.

10.3.2.4 The smoke shutter shall be confirmed to be in the open position.

10.3.3 The spark igniter shall be turned on, and the power to the radiant heat lamps shall be activated simultaneously with the start of the data collection.

10.3.4 The time at which ignition of the specimen occurs shall be recorded, and the spark igniter shall be turned off.

10.3.4.1 The time of flameout shall be recorded.

10.3.4.2 For specimens that have the tendency to self-extinguish soon after ignition, the sparker igniter shall be left on until flaming ceases.

10.3.5 At the end of 15 minutes, the power to the radiant heat lamps shall be switched off, and the smoke shutter shall be closed.

10.3.6 Data shall be collected for a total of 30 minutes from the initiation of the test.

--`,,```,,,,````-`-`,,`,,`,`,,`---

Copyright National Fire Protection Association
Provided by IHS under license with NFPA
No reproduction or networking permitted without license from IHS
Not for Resale

10.3.7 At the end of 30 minutes, data collection shall cease.

10.3.7.1 If animals were exposed, they shall be removed from the exposure chamber.

10.3.7.2 The exposure chamber shall be vented with a high capacity exhaust system.

10.3.8 In tests where animals are exposed, blood samples shall be taken from any dead animals and analyzed for carboxyhemoglobin saturation.

10.3.8.1 Blood sampling and analyses shall be conducted in accordance with generally accepted methodologies.

10.3.9 In tests where animals are exposed, those surviving shall be checked daily for any signs of toxic effects (e.g., difficulty in breathing, convulsions), exploratory behavior, and eye and righting reflexes.

10.3.9.1 The status and weights of the animals shall be followed at 7 and 14 days for a 14-day postexposure period.

10.3.9.2 Any deaths during this period shall be recorded.

10.3.10 The sample holder shall be removed from the combustion chamber and cooled to an ambient temperature in an exhaust hood.

10.3.10.1 After the specimen has cooled, the specimen holder shall be disassembled and the weight of the aluminum foil and the residue shall be determined.

10.3.11 The combustion chamber and the chimney shall be removed and cleaned after each test.

10.3.11.1 The exposure chamber shall be cleaned after each test.

10.3.11.2 Ethyl alcohol shall be considered a satisfactory solvent.

10.3.11.3 No residue shall be left on the inside of any of the pieces of the apparatus.

Chapter 11 Calculation

11.1* General.

11.1.1 The lethal toxic potency (LC_{50}) of the test specimen shall be predicted from the combustion atmosphere analytical data for CO, CO_2, O_2, and, if present, HCN, HCl, and HBr *(see B.2.7)*.

11.1.2 The LC_{50} shall be determined for a given specimen mass loss by first calculating the total *FED* for the test.

11.1.3 The LC_{50} then shall be calculated as that specimen mass loss that would yield a total *FED* of 1.1 within a chamber volume of 1 m^3.

11.2 Equations.

11.2.1* The total 30-minute *FED* for a given specimen mass loss shall be determined from the following equation where the values of all gas concentrations are the integrated *Ct* product values under their respective concentration–time curves taken over the 30-minute test period divided by 30:

$$FED = \frac{m[\mathrm{CO}]}{\mathrm{CO}_2 - b} + \frac{21 - [\mathrm{O}_2]}{21 - LC_{50}\mathrm{O}_2} + \frac{[\mathrm{HCN}]}{LC_{50}\mathrm{HCN}} + \frac{[\mathrm{HCl}]}{LC_{50}\mathrm{HCl}} + \frac{[\mathrm{HBr}]}{LC_{50}\mathrm{HBr}}$$

$$= \frac{m[\mathrm{CO}]}{[\mathrm{CO}_2] - b} + \frac{21 - [\mathrm{O}_2]}{21 - 5.4\%} + \frac{[\mathrm{HCN}]}{150\ \mu\mathrm{L/L}} + \frac{[\mathrm{HCl}]}{3700\ \mu\mathrm{L/L}} + \frac{[\mathrm{HBr}]}{3000\ \mu\mathrm{L/L}}$$

11.2.2 The 30-minute LC_{50} for the test specimen shall be determined from the following equation where the specimen mass loss is in g, the chamber volume is 0.2 m^3, and the resulting LC_{50} = g·m^{-3}:

$$LC_{50} = \frac{\text{specimen mass loss}}{FED \times \text{chamber volume}}$$

11.2.3* To calculate toxic hazard data for smoke from a postflashover fire, a value of the LC_{50} corrected for the expected postflashover yield of CO is needed.

11.2.3.1 The adjusted value shall be determined from the following formula:

$$LC_{50(corr)} = \frac{1}{\left[1/LC_{50(raw)}\right] + 44 \times 10^{-3} - 5.0 \times 10^{-5}\left([\mathrm{CO}]/m\right)}$$

where:

$LC_{50(raw)}$ = value of the LC_{50} determined from the equation in 11.2.3.1
m = mass of specimen loss during the test at the *FED* = 1.1 condition
CO = concentration of CO at the *FED* = 1.1 condition (mL/L)

Chapter 12 Analysis

12.1 Report. The report shall include the following information for all tests:

(1) Laboratory identification
(2) Test identification and date
(3) Laboratory ambient conditions (temperature and humidity)
(4) Description of specimen
(5) Specimen dimensions
(6) Irradiation time and heat flux conditions
(7) Maximum exposure chamber temperature and time when attained *(see B.2.6)*
(8) Initial specimen mass and mass loss during test in g·m^{-3} of chamber volume *(see B.3.3)*
(9) Time to ignition and flameout
(10) Observations of specimen
(11) Observations of the times to smoke evolution, ignition, and flameout
(12) Observations of melting, char formation, spalling, unusually vigorous burning, and reignition

12.2 Gas Analysis Data.

12.2.1 The required exposure chamber data shall include integrated *Ct* product values during the 30-minute test for CO, O_2, HCN, HCl, and HBr; minimum O_2 concentration and maximum CO_2 concentration; and times to reach minimum O_2 and maximum CO_2.

12.2.2 The methods used for analyses shall be identified.

12.3 Calculations. The following data shall be calculated for all tests:

(1) *Ct* product for each analyzed toxicant
(2) *FED*
(3) Predicted LC_{50}

Copyright National Fire Protection Association
Provided by IHS under license with NFPA
No reproduction or networking permitted without license from IHS
Not for Resale

12.4 Best Overall Predicted LC_{50} Value. A least-squares regression analysis of *FED* versus mass loss values for all tests shall be used to determine the best overall predicted LC_{50} value.

12.4.1 The LC_{50} value shall be corrected for high postflashover CO yield.

12.4.2 Plots of individual toxicant concentrations, specimen mass loss, and temperature as functions of time shall be considered optional.

12.5 Report. The report shall include the following information for each test using the exposure of animals:

(1) Strain of rat and identity of supplier
(2) Weight of each animal when received, prior to test, and of surviving animals at 7 and 14 days postexposure
(3) Number of animals that die during the test, including up to 10 minutes posttest, and number of animals that die up to 14 days posttest
(4) Blood carboxyhemoglobin saturation values for animals that die during the test
(5) Animal observations (e.g., unusual behavior during test); immediate posttest observations of live animals, such as tremors, convulsions, difficulty in breathing, and severe eye irritation

Annex A Explanatory Material

Annex A is not a part of the requirements of this NFPA document but is included for informational purposes only. This annex contains explanatory material, numbered to correspond with the applicable text paragraphs.

A.1.1 The pyrolysis or combustion of every combustible material or product produces smoke that is toxic. A standard test method for the development of data for use in toxic hazard modeling is valuable. Such data include quantification of the toxicity of the smoke. It also is desirable to ascertain whether the observed toxicity can be attributed to the major common toxicants.

A.3.3.4 Fractional Effective Dose (*FED*). Since time values in this ratio numerically cancel, the *FED* is also the ratio of the average concentration of a gaseous toxicant to its LC_{50} value for the same exposure time. When not used with reference to a specific toxicant, *FED* represents the sum of *FED*s for individual toxicants in a combustion atmosphere.

A.4.1.6 This confirmation ensures that the monitored toxicants account for the observed toxic effects.

A.5.1.7 The purpose of the doors is to allow for cleaning and maintenance of the chamber, the chimney, and the smoke shutter and to provide fresh air during the calibration of the heat lamps and immediately prior to testing.

A.5.13 A detailed illustration of one animal restrainer meeting this requirement is shown in Figure A.5.13.

A.9.5.1(3) Because the lamps respond quickly, while the temperature at the thermocouples rises more slowly, it is important to avoid a significant overshoot, which can occur if the controller is not tuned optimally.

A.10.1 Additional information on research to determine experimentally the lethal toxic potency of a test material can be found in B.3.1 and B.3.2.

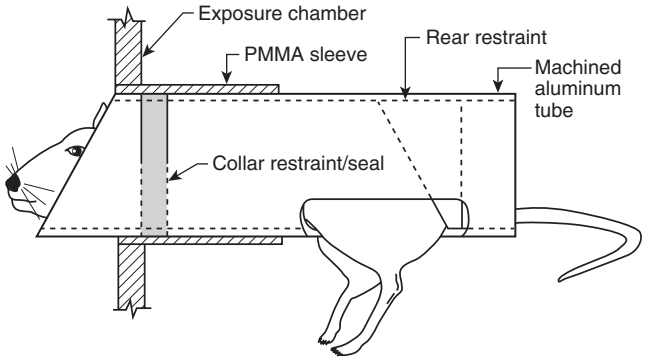

PMMA, polymethyl methacrylate.

FIGURE A.5.13 Animal Restrainer.

A.10.2.2.1 The trap shall be dried, and the glass wool shall be replaced. The normal operating temperature of the moisture trap is 0°C.

A.11.1 Although the theoretical value of the *FED* associated with 50 percent lethality is 1.0, a median value of 1.1 has been determined experimentally.

A.11.2.1 All values are in μL/L, except O_2, which is expressed as a percentage.

The values for m and b depend on the concentration of CO_2. If $CO_2 < 5$ percent, $m = -18$ and $b = 122{,}000$. If $CO_2 > 5$ percent, $m = 23$ and $b = -38{,}600$.

For each individual toxicant, the LC_{50} values shown have been statistically determined from independent experimental data to produce lethality in 50 percent of test animals (rats) within a 30-minute exposure plus 14 days postexposure.

A.11.2.3 If real-scale, postflashover fire test data are available for a particular product/occupancy combination, the measured CO yield should be used in the equation in 11.2.1 and the correction in the equation in 11.2.3.1 should not be made.

Annex B Commentary

This annex is not a part of the requirements of this NFPA document but is included for informational purposes only.

B.1 Introduction. This annex provides insight into the development of the test method, discusses the rationale for the unique features of the method, and describes the proper use of the resulting data. For a more comprehensive treatment, along with presentation of data and results obtained on typical materials, see NIST Special Publication 827. [1]

B.2 Development of the Method. A test method to assess the acute inhalation toxicity of combustion products has three basic components: a combustion system, a chemical analysis system, and an animal exposure system. [2] Additionally, there should be a rational and accepted strategy for the incorporation of raw experimental data into a quantified expression for toxic potency.

B.2.1 This test method employs the combustion system that was developed at Southwest Research Institute (SwRI) for the National Institute of Building Sciences (NIBS). [3] Representing a significant improvement over an earlier radiant heat device first used at the Weyerhaeuser Company, [2] the combustion system was adopted jointly by the National Institute of

Copyright National Fire Protection Association
Provided by IHS under license with NFPA
No reproduction or networking permitted without license from IHS
Not for Resale

Standards and Technology (NIST) and SwRI for the development of this test method. [4] Its main feature is that of providing for combustion of a test specimen under the realistic conditions of radiant heat within an apparatus specially designed for ruggedness and ease of operation.

B.2.2 For a small, developing fire, the bench-scale specimen in the radiant apparatus provides a reasonable representation of a full-scale fire. The thermal boundary conditions are appropriate, being radiative and emanating from only one face. A small fire imposes about 35 kW/m^2 on an adjacent unburned surface, although a value of approximately 48 kW/m^2 is common, and values over 100 kW/m^2 can be measured. [5,6] Thus, although an irradiance of 50 kW/m^2 for a preflashover test might be somewhat high, it is by no means unusual. If a specific scenario involves a heating flux other than 50 kW/m^2, it can be readily accommodated in the test method.

B.2.3 In a real-scale fire, the combustion products generally contain contributions from portions of the burning product that are burning near the front surface, those that are partially burned through, and those produced from nearly burned-out portions of the burning product. Thus, a bench-scale test should represent this mixture of gases as closely as possible. The physical constraints of the test method are a maximum specimen thickness of 51 mm and a radiant heating time of 15 minutes. The actual thickness of nonlayered products should be selected so that thermal decomposition is complete when 15 minutes has elapsed and the shutter is closed. Decomposition should be determined by examination of the generation of CO, which should have ceased before the shutter is closed.

A preliminary trial run in which neither animals nor gas analyzers need to be used should suffice. Homogeneous products then can be prepared for actual testing by cutting to the appropriate thickness. Layered composites also generally might be reduced in thickness, as necessary. If the two face materials are not identical, however, then separate tests should be performed, with each face being exposed in separate testing.

B.2.4 The chemical analysis system used in the test method employs methodology commonly accepted by those skilled in such procedures and as presented in ASTM E 800, *Standard Guide for Measurement of Gases Present or Generated During Fires*, and in ISO 19701, *Methods for Sampling and Analysis of Fire Effluents*.

B.2.5 The use of rats as an acceptable model for human exposure has, within the scope and significance of this test method, been well documented in ISO/TR 9122, *Toxicity Testing of Fire Effluents*, Part 5.

B.2.6 The animal exposure system is that employed in the NBS Cup Furnace method. [7] It has been widely used in a number of laboratories and has been found to be highly satisfactory. An important consideration in conducting animal exposures is that the biological effects on the animals' condition during a test should be adversely affected as little as possible by causes other than specimen toxicity. Such adverse affects can be minimized by all of the following:

(1) Providing an animal exposure chamber of sufficient size so that the animals' exhaled CO_2 does not affect them adversely
(2) Making certain that heating conditions from specimen heaters do not create an excessive heat burden to the animals
(3) Providing a restraint system that does not cause undue physical stress

Judgment regarding exposure chamber temperatures excursions above 40°C should be exercised. Generally, such excursions have not been regarded as detrimental to the resulting test data. However, there could be exceptions in extreme cases.

B.2.7 The strategy employed in this method for quantification of smoke toxicity represents utilization of the latest in state-of-the-art understanding of the prediction of the toxic effects of fire effluents as reported in ISO 13344, *Estimation of the Lethal Toxic Potency of Fire Effluents*. It employs a methodology for the calculation of toxic potencies from combustion product analysis data without the exposure of experimental animals. The basis for such methodology comes from extensive experimentation using the exposure of rats to the common fire gases, both singly and in combinations, that showed the additivity of fractional exposure doses (*FED*s) of the individual toxicants. [8–18] Expressed mathematically, the principle is shown in the following equation:

$$FED = \sum_{i=1}^{n} \int_{0}^{t} \frac{C_i}{(Ct)_i} dt$$

where:

C_i = concentration of the toxic component *(i)*
$(Ct)_i$ = specific exposure dose required to produce the toxicological effect [19]

Where the *FED* = 1, it is expected that the mixture of gaseous toxicants would be lethal to 50 percent of exposed animals. Use of the principle in the form given in this test method has been termed the "N-gas model" by NIST. The N-gas model also takes into account the effect of CO_2 on the toxicity of CO, as expressed empirically from studies conducted at NIST. [8] Examination of a series of pure gaseous toxicant experiments in which various percentages of animals die indicates that the mean *FED* value using the N-gas calculation was 1.07, with 95 percent ± 0.20 percent confidence limits. [11]

B.3 Limitations on Materials and Products.

B.3.1 All products should be tested using the calculation method described. However, the lethal toxic potency of the smoke from certain products cannot be attributed to the common toxic gases analyzed. These products might need to be tested according to conventional animal exposure methodology that requires the experimental determination of an LC_{50} value. Otherwise, further research is necessary to explain why the lethal toxic potency cannot be estimated from the concentrations of the common toxic gases. For certain materials or products containing perfluorinated polymers, this test method could be inappropriate because a number of highly specialized combustion and toxicological phenomena can arise that make it difficult to create proper bench-scale conditions that represent real-scale toxicity. [20]

B.3.2 The research for the N-gas model did not include the combustion gases likely to be produced when materials or products that contain elements such as sulfur, bromine, or fluorine are burned. Therefore, the calculations might not fully account for the smoke toxicity in such cases.

B.3.3 Certain ash-producing materials (e.g., silicones) necessitate the use of appropriate procedures to measure the quantity of sample burned, since the load cell readings are compromised by the deposit of ash resulting from the burning of the material.

B.4 Test Method Data. This test method has been designed to provide data for the mathematical modeling of fire hazard as a

Copyright National Fire Protection Association
Provided by IHS under license with NFPA
No reproduction or networking permitted without license from IHS
Not for Resale

means for evaluating materials and products and to assist in their research and development.

B.4.1 Studies at NIST have demonstrated that a bench-scale toxic potency test can adequately represent many aspects of a postflashover fire. [4] One exception is the generation of carbon monoxide, which in some cases can be governed more by the available air supply in an actual full-scale fire than by the nature of the material burned. This exception cannot be simulated in a practical bench-scale test method. A few limited studies found that postflashover fires exhibited a yield of approximately 0.2 kg of CO per kg of specimen mass lost. Based on this finding, LC_{50} values to be used in appraising postflashover toxic fire hazard should be adjusted according to 11.2.3.

B.4.2 Data from this method have been compared directly to real-scale, postflashover fires of the same materials (i.e., Douglas fir, rigid polyurethane foam, and PVC). [21] Wall cork, particle board, and a laminated melamine/vermiculite composite also have been studied, producing much the same result. [22] These materials challenge the method with an extremely diverse set of test cases as follows:

(1) Natural cellulosics and man-made plastics
(2) Solid and foam plastics
(3) Materials in which CO (along with CO_2 and low O_2) is the only toxicant
(4) Those that produce significant amounts of HCl and HCN

The results showed agreement of the postflashover LC_{50} data and the bench-scale data to within a factor of 3.

B.4.3 It is possible to demonstrate the regimen of LC_{50} values in which performance differentiation is, and is not, scientifically proper. The LC_{50} of CO_2-potentiated CO is about 5 $g \cdot m^{-3}$, and the yield of CO is about 0.2 g/g of fuel burned. Some variation in this latter value has been observed. This value is the best representation, given current knowledge. Research to improve this knowledge is in progress. Therefore, with this test method, the LC_{50} of postflashover smoke is about 25 $g \cdot m^{-3}$. This, plus the accuracy of the method, results in postflashover smoke with $LC_{50(corr)}$ values between 8 $g \cdot m^{-3}$ (i.e., 25/3) and 25 $g \cdot m^{-3}$ that are indistinguishable from each other using this test method. LC_{50} values >25 $g \cdot m^{-3}$ are not possible for postflashover smoke because the high CO is characteristic of these fires.

B.4.4 Thus, it is more indicative of the state of the art that LC_{50} values greater than 8 $g \cdot m^{-3}$ are indistinguishable from each other using this test method. Most common building and furnishing materials have LC_{50} values substantially higher than 8 $g \cdot m^{-3}$. Thus, the lethal toxicity potency of the smoke most often is determined by the fire ventilation. For preflashover and postflashover fires, this method identifies products that produce smoke of extreme toxic potency.

B.4.5 In the event that time to ignition and mass burning rate data are desired but are not readily available from other test methods, they should be obtained using a modification of this test procedure. Test specimens should be cut to the maximum size of 76 mm × 127 mm and blackened with a thin coating of carbon black or sprayed with a flat black coating having a heat energy absorptivity factor of 0.96 (Krylon® ultra flat spray paint can be permitted to be used for this application). Specimens then should be conditioned at an ambient temperature of 23°C ± 3°C and a relative humidity of 50 percent ± 10 percent for at least 24 hours prior to testing. A specimen, mounted in the specimen holder, should be inserted into the combustion cell, which then should be sealed with the standard taper plug. The plug should be secured with wire or springs and the door closed at the front of the exposure chamber (nearest the chimney). The portholes and the end door should be left open. The apparatus should be located directly under an exhaust hood. (CAUTION: Substantial quantities of smoke could be produced by a full-scale specimen, as in this test. The hood should be of adequate capacity to accommodate the smoke evolution.) The spark igniter should be turned on and the power activated to the radiant heat lamps.

Data should be collected from the load cell and oxygen analyzer only. The time of ignition should be noted, and the spark igniter should be turned off. (For samples that have the tendency to self-extinguish immediately, the spark igniter should be left on until flaming ceases.) Data should be collected for 15 minutes. After cooling to ambient temperature, the specimen should be reweighed. The mass loss rate (*MLR*) per unit area should be calculated from the following equation:

$$MLR = \frac{m_{90} - m_{10}}{A(t_{90} - t_{10})}$$

where:
MLR = mass loss rate (g/m^2)
m_{90} = 90 percent of consumed mass (g)
m_{10} = 10 percent of consumed mass (g)
A = exposed face area of the specimen (m^2)
t_{90} = time at which 90 percent mass loss of the consumed mass occurred (g)
t_{10} = time at which 10 percent mass loss of the consumed mass occurred (g)

B.5 References.

(1) V. Babrauskas, B. C. Levin, R. G. Gann, M. Paabo, R. H. Harris, Jr., R. D. Peacock, and S. Yusa, "Toxic Potency Measurement for Fire Hazard Analysis," NIST Special Publication 827, National Institute of Standards and Technology, Gaithersburg, MD, 1991.
(2) H. L. Kaplan, A. F. Grand, and G. E. Hartzell, *Combustion Toxicology: Principles and Test Methods*, Technomic Publishing Co., Lancaster, PA, 1983.
(3) A. F. Grand, "Development of a Product Performance Smoke Toxicity Test," Southwest Research Institute Project No. 01-1744, Final Report to National Institute of Building Sciences, Washington, DC, 1990.
(4) V. R. Babrauskas, R. H. Harris, Jr., E. Braun, B. C. Levin, M. Paabo, and R. G. Gann, "The Role of Bench-Scale Test Data in Assessing Full-Scale Fire Toxicity," NIST Tech. Note 1284, National Institute of Standards and Technology, Gaithersburg, MD, 1991.
(5) V. Babrauskas and J. F. Krasny, "Fire Behavior of Upholstered Furniture," NBS Monograph 173, U.S. National Bureau of Standards, 1985.
(6) T. J. Ohlemiller and K. Villa, "Furniture Flammability: An Investigation of the California Bulletin 133 Test — Part II: Characterization of the Ignition Source and a Comparable Gas Burner," NISTIR 4348, National Institute of Standards and Technology, Gaithersburg, MD, 1990.
(7) B. C. Levin, A. J. Fowell, M. M. Birky, M. Paabo, A. Stolte, and D. Malek, "Further Development of a Test Method for the Assessment of the Acute Inhalation Toxicology of Combustion Products," NBSIR 82-2532, U.S. National Bureau of Standards, 1982.

Copyright National Fire Protection Association
Provided by IHS under license with NFPA
No reproduction or networking permitted without license from IHS
Not for Resale

(8) B. C. Levin, M. Paabo, C. Bailey, S. E. Harris, and J. L. Gurman, "Toxicological Effects of the Interactions of Fire Gases and Their Use in a Toxic Hazard Assessment Computer Model," *The Toxicologist*, vol. 5, p. 127, 1985.
(9) V. Babrauskas, B. C. Levin, and R. G. Gann, "A New Approach to Fire Toxicity Data for Hazard Evaluation," *Fire J.*, vol. 81, no. 2, pp. 22–71, 1987. Also in *ASTM Stand. News*, vol. 14, pp. 28–33, 1986.
(10) B. C. Levin, M. Paabo, J. L. Gurman, and S. E. Harris, "Effects of Exposure to Single or Multiple Combinations of the Predominant Toxic Gases and Low Oxygen Atmospheres Products in Fires," *Fund. Appl. Tox.*, vol. 9, pp. 236–250, 1987.
(11) B. C. Levin, M. Paabo, J. L. Gurman, H. M. Clark, and M. F. Yoklavich, "Further Studies of the Toxicological Effects of Different Time Exposures to the Individual and Combined Fire Gases: Carbon Monoxide, Hydrogen Cyanide, Carbon Dioxide, and Reduced Oxygen," in *Polyurethane '88, Proceedings of the 31st Society of Plastics Meeting*, pp. 249–252, Technomic Publishing Co., Lancaster, PA, 1988.
(12) B. C. Levin and R. G. Gann, "Toxic Potency of Fire Smoke: Measurement and Use," in *Fire and Polymers: Hazards Identification and Prevention*, pp. 3–11, ACS Symp. Series 425, G. L. Nelson, ed., American Chemical Society, Washington, DC, 1990.
(13) G. E. Hartzell, D. N. Priest, and W. G. Switzer, "Modeling of Toxicological of Fire Gases: II. Mathematical Modeling of Intoxication of Rats by Carbon Monoxide and Hydrogen Cyanide," *J. Fire Sciences*, vol. 3, no. 2, pp. 115–128, 1985.
(14) G. E. Hartzell, S. C. Packham, A. F. Grand, and W. G. Switzer, "Modeling of Toxicological of Fire Gases: III. Quantification of Post-Exposure Lethality of Rats from Exposure to HCl Atmospheres," *J. Fire Sciences*, vol. 3, no. 3, pp. 195–207, 1985.
(15) G. E. Hartzell, H. W. Stacy, W. G. Switzer, and D. N. Priest, "Modeling of Toxicological of Fire Gases: V. Mathematical Modeling of Intoxication of Rats by Combined Carbon Monoxide and Hydrogen Cyanide Atmospheres," *J. Fire Sciences*, vol. 3, no. 5, pp. 330–342, 1985.
(16) G. E. Hartzell, A. F. Grand, and W. G. Switzer, "Modeling of Toxicological of Fire Gases: VI. Further Studies on the Toxicity of Smoke Containing Hydrogen Chloride," *J. Fire Sciences*, vol. 5, no. 6, pp. 368–391, 1987.
(17) G. E. Hartzell, A. F. Grand, and W. G. Switzer, "Modeling of Toxicological of Fire Gases: VII. Studies on Evaluation of Animal Models in Combustion Toxicology," *J. Fire Sciences*, vol. 6, no. 6, pp. 411–431, 1988.
(18) G. E. Hartzell, A. F. Grand, and W. G. Switzer, "Studies on the Toxicity of Smoke Containing Hydrogen Chloride," Symposium on Fire and Polymers, American Chemical Society Meeting, Dallas, TX, April 10, 1989.
(19) G. E. Hartzell and H. W. Emmons, "The Fractional Effective Dose Model for Assessment of Hazards Due to Smoke from Materials," *J. Fire Sciences*, vol. 6, no. 5, pp. 356–362, 1988.
(20) F. B. Clarke, H. van Kuijk, R. Valentine, G. T. Makovec, W. C. Seidel, B. B. Baker, D. J. Kasprzak, J. K. Bonesteel, M. Janssens, and C. H. Herpol, "The Toxicity of Smoke from Fires Involving Perfluoropolymers: Full-Scale Fire Studies," *J. Fire Sciences*, vol. 10, no. 6, pp. 488–527, 1992.
(21) E. Braun, R. G. Gann, B. C. Levin, and M. Paabo, "Combustion Product Toxic Potency Measurements: Comparison of a Small-Scale Test and 'Real-World' Fire," *J. Fire Sciences*, vol. 8, no. 1, pp. 63–79, 1990.
(22) E. Braun, unpublished additional real-scale data for smoke toxicity analysis, National Institute of Standards and Technology, Gaithersburg, MD.

Annex C Precision and Bias

This annex is not a part of the requirements of this NFPA document but is included for informational purposes only.

C.1 Precision. The precision of this test method has not yet been established. A precision statement will be prepared and included in the test method after completion of an interlaboratory test series.

C.2 Bias. The bias of this test method has not been measured, because there is no accepted reference material for use in making such measurements.

C.2.1 Comparison of the $LC_{50(corr)}$ values derived using this method *(see B.4.2)* have been shown to reproduce the LC_{50} values from real-scale, postflashover fires to within a factor of 3. Therefore, product LC_{50} values differing by less than a factor of 3 are indistinguishable from one another.

C.2.2 The accuracy of the bench-scale data for preflashover fires has not been established experimentally. However, the combustion conditions in the apparatus are quite similar to real preflashover fires, although the mass burning rate is higher at the 50 kW/m^2 irradiance.

Annex D Informational References

D.1 Referenced Publications. The documents or portions thereof listed in this annex are referenced within the informational sections of this standard and are not part of the requirements of this document unless also listed in Chapter 2 for other reasons.

D.1.1 NFPA Publications. (Reserved)

D.1.2 Other Publications.

D.1.2.1 ASTM Publications. ASTM International, 100 Barr Harbor Drive, P.O. Box C700, West Conshohocken, PA 19428-2959.

ASTM E 800, *Standard Guide for Measurement of Gases Present or Generated During Fires*, 2001.

D.1.2.2 ISO Publications. American National Standards Institute, 25 West 43rd Street, 4th Floor, New York, NY 10036.

ISO 13344, *Estimation of the Lethal Toxic Potency of Fire Effluents*, 2004.

ISO 19701, *Methods for Sampling and Analysis of Fire Effluents*, 2005.

ISO/TR 9122, *Toxicity Testing of Fire Effluents*, Part 5, 1993.

D.2 Informational References. (Reserved)

D.3 References for Extracts in Informational Sections. (Reserved)

Copyright National Fire Protection Association
Provided by IHS under license with NFPA
No reproduction or networking permitted without license from IHS
Not for Resale

Index

Copyright © 2006 National Fire Protection Association. All Rights Reserved.

The copyright in this index is separate and distinct from the copyright in the document that it indexes. The licensing provisions set forth for the document are not applicable to this index. This index may not be reproduced in whole or in part by any means without the express written permission of NFPA.

-A-

Analysis ..... Chap. 12
Animal exposure chamber .....*see* Effluent collection and animal exposure chamber
Animal restrainers 5.13, A.5.13
Animals, test ..... 1.2.7, Chap. 8, B.2.5, B.2.6
After testing 8.7, 10.3.9
Exposure 8.6
Housing 8.4
Maintenance and care 8.2
Quarantine period 8.3
Report 12.5
Specifications 8.1
Test procedure 4.1.5, 4.1.6, 10.3.1, 10.3.2.2, 10.3.2.3, 10.3.7.1, 10.3.8, 10.3.9
Weighing 8.5, 10.3.9.1

-B-

Bias C.2

-C-

Calculations ..... Chap. 11, 12.3
Calibration, equipment ..... Chap. 9, 10.2.4
Gas analyzers 9.3
Heat flux meter 5.7.2
Load cell 9.4, 10.2.4.3
Radiant heaters 5.7.3, 9.2
Temperature controller ..... 9.5, A.9.5.1(3)
Carbon dioxide 1.1.3, B.4.2, B.4.3
Analytical data for 10.1.1, 11.1.1, 11.2.1, A.11.2.1, A.11.2.3
Gas analysis of 5.11.1, 5.11.2, 9.3.1, 12.2.1
Carbon monoxide 1.1.3, B.2.3
Analytical data for 10.1.1, 11.1.1, 11.2.1, 11.2.3, A.11.2.1, A.11.2.3
Gas analysis of 5.11.1, 5.11.2, 9.3.1, 12.2.1
In postflashover fires ..... 4.1.7, 11.2.3, A.11.2.3, B.4.1 to B.4.3
Carboxyhemoglobin saturation 10.3.8
Definition 3.3.1
Chimney 5.2, 10.3.11
Combustion cell 5.2.2, 5.2.5, 5.2.8, 5.4, 6.1.1.1, 6.1.4, 6.1.5, 10.3.2, 10.3.10, 10.3.11
Commentary ..... Annex B
Concentration–time curve ..... 4.1.3; *see also Ct* products
Definition 3.3.2
***Ct* products** 4.1.3, 4.1.4, 11.2.1, 12.2.1, 12.3, A.11.2.1, A.11.2.3
Definition 3.3.3

-D-

Data collection 5.12, 10.3.3, 10.3.4, 10.3.6, 10.3.7

-E-

Effluent collection and animal exposure chamber ..... 5.1, 5.2.2, 5.2.5 to 5.2.7
Test procedures 10.3.2.2, 10.3.2.3, 10.3.7.1, 10.3.7.2, 10.3.11.1
Venting system 6.1.2, 6.2, 10.3.7.2
Equations 11.2, A.11.2.1, A.11.2.3
Exposure chamber .....*see* Effluent collection and animal exposure chamber

-F-

Fractional effective dose *(FED)* 10.1.1.1, 11.1.2, 11.1.3, 11.2.1, 11.2.2, 11.2.3.1, 12.3, A.11.1, A.11.2.1, B.2.7
Definition 3.3.4, A.3.3.4

-G-

Gas analysis data 12.2
Gas analyzers 5.1.5, 5.11, 5.12, 10.2.2, A.10.2.2.1
Calibration 9.3
Gas sampling 5.11, 5.12, 10.2.2.2

-H-

Hazards ..... Chap. 6
Heat flux calibration 9.2
Heat flux meter ..... 5.7, 9.2.1, 9.5.1, 10.2.1, A.9.5.1(3)
Hoods, chemical or canopy 6.1.1, 10.3.10
Hydrogen bromide (HBr) 1.1.3
Analytical data for 10.1.1, 11.1.1, 11.2.1, A.11.2.1
Gas analysis of 5.11.3, 9.3.2, 12.2.1
Hydrogen chloride (HCl) 1.1.3, B.4.2
Analytical data for 10.1.1, 11.1.1, 11.2.1, A.11.2.1
Gas analysis of 5.11.3, 9.3.2, 12.2.1
Hydrogen cyanide (HCN) 1.1.3, B.4.2
Analytical data for 10.1.1, 11.1.1, 11.2.1, A.11.2.1
Gas analysis of 5.11.3, 9.3.2, 12.2.1

-I-

Igniter, spark 5.8, 10.2.3, 10.3.3, 10.3.4
Ignition, time to 10.3.4, B.4.5
Irradiance, of lamps 5.5.2, 5.5.3

-L-

Lamps, radiant heat .....*see* Radiant heaters
LC_{50} ..... 1.2.2, 1.2.3, 4.1.4 to 4.1.6, 12.3, A.4.1.6, B.4.3, B.4.4
Average estimated 10.1.1.3, 10.1.2
Best overall predicted value 12.4
Calculation ..... Chap. 11
Definition 3.3.5
Experimental determination of B.3.1
Test values compared to real fire values B.4.2, C.2.1
Load cell ..... Fig. 5.4.1, 5.10, 5.12, 10.2.4.3

-M-

Mass burning rate B.4.5, C.2.2
Mass loss 4.1.4
Concentration 4.1.5, 4.1.6, 10.1.2
Definition 3.3.6
Rate of 4.1.9, 11.2, A.11.2.1, A.11.2.3, B.4.5
Materials, limitations on B.3
Material test specimens .....*see* Specimen, test

-N-

NO_2, gas analysis of 9.3.2

Copyright National Fire Protection Association
Provided by IHS under license with NFPA
No reproduction or networking permitted without license from IHS
Not for Resale

-O-

Oxygen 1.1.3, B.4.2
Analytical data for 10.1.1, 11.1.1, 11.2.1, A.11.2.1
Gas analysis of 5.11.1, 5.11.2, 9.3.1, 12.2.1

-P-

Perfluorinated polymers B.3.1
Postflashover ..... 1.2.3, 4.1.7, 11.2.3, A.11.2.3, B.4.1 to B.4.4, C.2.1
Definition 3.3.7
Precision C.1
Preflashover 1.2.3, B.4.4, C.2.2
Preparation for tests 10.2, A.10.2.2.1
Procedures ..... Chap. 10
Products, limitations on B.3
Purpose of standard 1.2

-R-

Radiant heaters 5.1.1, 5.4.1, 5.5, 10.2.1, 10.3.3, 10.3.5
Radiant heat flux 4.1.8
References ..... Chap. 2, Annex D
Report 12.1, 12.5

-S-

Safety precaution 6.1
Scope of standard 1.1, A.1.1
Shall (definition) 3.2.1
Should (definition) 3.2.2
Smoke, toxic ..... *see* LC_{50}
Smoke shutter 5.3, 10.3.2.4, 10.3.5
Spark igniter ..... *see* Igniter, spark
Specimen, test ..... Chap. 7
Conditioning 7.2
Ignition of 10.3.4
Preparation ..... 10.2.4.1 to 10.2.4.3
Rate of mass loss 4.1.9
Test method 4.1.1, 4.1.5, 4.1.9
Test procedure 10.3.2
Specimen holder 5.9, 5.10.1, 5.10.3, 6.1.3, 10.2.4.2, 10.2.4.3, 10.3.10
Standard (definition) 3.2.3

-T-

Temperature controller 5.6
Calibration ..... 9.5, A.9.5.1(3)
Test animals ..... *see* Animals, test
Test apparatus ..... Chap. 5
Test method ..... Chap. 4
Data B.4
Development of B.2
Test procedure ..... Chap. 10
Test specimens ..... 1.2.5; *see also* Specimen, test
Thermocouples 5.1.6, 5.6.1, 5.6.2, 5.12, 9.5.2.1
Toxic smoke ..... *see* LC_{50}

-V-

Ventilation-limited fires 4.1.7

Copyright National Fire Protection Association
Provided by IHS under license with NFPA
No reproduction or networking permitted without license from IHS
Not for Resale

Sequence of Events Leading to Issuance of an NFPA Committee Document

Step 1: Call for Proposals

- Proposed new Document or new edition of an existing Document is entered into one of two yearly revision cycles, and a Call for Proposals is published.

Step 2: Report on Proposals (ROP)

- Committee meets to act on Proposals, to develop its own Proposals, and to prepare its Report.
- Committee votes by written ballot on Proposals. If two-thirds approve, Report goes forward. Lacking two-thirds approval, Report returns to Committee.
- Report on Proposals (ROP) is published for public review and comment.

Step 3: Report on Comments (ROC)

- Committee meets to act on Public Comments to develop its own Comments, and to prepare its report.
- Committee votes by written ballot on Comments. If two-thirds approve, Report goes forward. Lacking two-thirds approval, Report returns to Committee.
- Report on Comments (ROC) is published for public review.

Step 4: Technical Report Session

- "*Notices of intent to make a motion"* are filed, are reviewed, and valid motions are certified for presentation at the Technical Report Session. ("Consent Documents" that have no certified motions bypass the Technical Report Session and proceed to the Standards Council for issuance.)
- NFPA membership meets each June at the Annual Meeting Technical Report Session and acts on Technical Committee Reports (ROP and ROC) for Documents with "certified amending motions."
- Committee(s) vote on any amendments to Report approved at NFPA Annual Membership Meeting.

Step 5: Standards Council Issuance

- Notification of intent to file an appeal to the Standards Council on Association action must be filed within 20 days of the NFPA Annual Membership Meeting.
- Standards Council decides, based on all evidence, whether or not to issue Document or to take other action, including hearing any appeals.

Committee Membership Classifications

The following classifications apply to Technical Committee members and represent their principal interest in the activity of the committee.

M *Manufacturer:* A representative of a maker or marketer of a product, assembly, or system, or portion thereof, that is affected by the standard.

U *User:* A representative of an entity that is subject to the provisions of the standard or that voluntarily uses the standard.

I/M *Installer/Maintainer:* A representative of an entity that is in the business of installing or maintaining a product, assembly, or system affected by the standard.

L *Labor:* A labor representative or employee concerned with safety in the workplace.

R/T *Applied Research/Testing Laboratory:* A representative of an independent testing laboratory or independent applied research organization that promulgates and/or enforces standards.

E *Enforcing Authority:* A representative of an agency or an organization that promulgates and/or enforces standards.

I *Insurance:* A representative of an insurance company, broker, agent, bureau, or inspection agency.

C *Consumer:* A person who is, or represents, the ultimate purchaser of a product, system, or service affected by the standard, but who is not included in the *User* classification.

SE *Special Expert:* A person not representing any of the previous classifications, but who has a special expertise in the scope of the standard or portion thereof.

NOTES;
1. "Standard" connotes code, standard, recommended practice, or guide.
2. A representative includes an employee.
3. While these classifications will be used by the Standards Council to achieve a balance for Technical Committees, the Standards Council may determine that new classifications of members or unique interests need representation in order to foster the best possible committee deliberations on any project. In this connection, the Standards Council may make appointments as it deems appropriate in the public interest, such as the classification of "Utilities" in the National Electrical Code Committee.
4. Representatives of subsidiaries of any group are generally considered to have the same classification as the parent organization.

Copyright National Fire Protection Association
Provided by IHS under license with NFPA
No reproduction or networking permitted without license from IHS
Not for Resale

NFPA Technical Committee Document Proposal Form

NOTE: All Proposals must be received by 5:00 p.m. EST/EDST on the published Proposal Closing Date.

For further information on the standards-making process, please contact the Codes and Standards Administration at 617-984-7249.

For technical assistance, please call NFPA at 617-770-3000.

FOR OFFICE USE ONLY

Log #:

Date Rec'd:

Please indicate in which format you wish to receive your ROP/ROC ☐ **electronic** ☐ **paper** ☒ **download**
(Note: If choosing the download option, you must view the ROP/ROC from our website; no copy will be sent to you.)

Date April 1, 200X **Name** John J. Doe **Tel. No.** 716-555-1234

Company Air Canada Pilot's Association

Street Address 123 Summer Street Lane **City** Lewiston **State** NY **Zip** 14092

Please indicate organization represented (if any)

1. (a) NFPA Document Title National Fuel Gas Code **NFPA No. & Year** 54, 200X Edition

(**b) Section/Paragraph** 3.3

2. Proposal Recommends (check one): ☐ new text ☒ revised text ☐ deleted text

3. Proposal (include proposed new or revised wording, or identification of wording to be deleted): [Note: Proposed text should be in legislative format, i.e., use underscore to denote wording to be inserted (inserted wording) and strike-through to denote wording to be deleted (~~deleted wording~~).]

Revise definition of effective ground-fault current path to read:

3.3.78 Effective Ground-Fault Current Path. An intentionally constructed, permanent, low impedance electrically conductive path designed and intended to carry ~~underground~~ electric fault current ~~conditions~~ from the point of a ground fault on a wiring system to the electrical supply source.

4. Statement of Problem and Substantiation for Proposal: (Note: State the problem that would be resolved by your recommendation; give the specific reason for your Proposal, including copies of tests, research papers, fire experience, etc. If more than 200 words, it may be abstracted for publication.)

Change uses proper electrical terms.

5. Copyright Assignment

(a) ☐ **I am the author of the text or other material (such as illustrations, graphs) proposed in this Proposal.**

(b) ☒ **Some or all of the text or other material proposed in this Proposal was not authored by me. Its source is as follows** (please identify which material and provide complete information on its source)**:**

ABC Co.

I hereby grant and assign to NFPA all and full rights in copyright in this Proposal and understand that I acquire no rights in any publication of NFPA in which this Proposal in this or another similar or analogous form is used. Except to the extent that I do not have authority to make an assignment in materials that I have identified in (b) above, I hereby warrant that I am the author of this Proposal and that I have full power and authority to enter into this assignment.

Signature (Required)

PLEASE USE SEPARATE FORM FOR EACH PROPOSAL • NFPA Fax: (617) 770-3500
Mail to: Secretary, Standards Council, National Fire Protection Association, 1 Batterymarch Park, Quincy, MA 02169-7471

8/29/2006

SAMPLE

Copyright National Fire Protection Association
Provided by IHS under license with NFPA
No reproduction or networking permitted without license from IHS
Not for Resale

NFPA Technical Committee Document Proposal Form

NOTE: All Proposals must be received by 5:00 p.m. EST/EDST on the published Proposal Closing Date.

For further information on the standards-making process, please contact the Codes and Standards Administration at 617-984-7249.

For technical assistance, please call NFPA at 617-770-3000.

FOR OFFICE USE ONLY

Log #: _____

Date Rec'd: _____

Please indicate in which format you wish to receive your ROP/ROC ☐ electronic ☐ paper ☐ download
(Note: If choosing the download option, you must view the ROP/ROC from our website; no copy will be sent to you.)

Date _____ **Name** _____ **Tel. No.** _____

Company _____

Street Address _____ **City** _____ **State** _____ **Zip** _____

Please indicate organization represented (if any) _____

1. (a) NFPA Document Title _____ **NFPA No. & Year** _____

(**b) Section/Paragraph** _____

2. Proposal Recommends (check one): ☐ new text ☐ revised text ☐ deleted text

3. Proposal (include proposed new or revised wording, or identification of wording to be deleted): [Note: Proposed text should be in legislative format, i.e., use underscore to denote wording to be inserted (inserted wording) and strike-through to denote wording to be deleted (~~deleted wording~~).]

4. Statement of Problem and Substantiation for Proposal: (Note: State the problem that would be resolved by your recommendation; give the specific reason for your Proposal, including copies of tests, research papers, fire experience, etc. If more than 200 words, it may be abstracted for publication.)

5. Copyright Assignment

(a) ☐ I am the author of the text or other material (such as illustrations, graphs) proposed in this Proposal.

(b) ☐ Some or all of the text or other material proposed in this Proposal was not authored by me. Its source is as follows (please identify which material and provide complete information on its source)**:**

_____

I hereby grant and assign to NFPA all and full rights in copyright in this Proposal and understand that I acquire no rights in any publication of NFPA in which this Proposal in this or another similar or analogous form is used. Except to the extent that I do not have authority to make an assignment in materials that I have identified in (b) above, I hereby warrant that I am the author of this Proposal and that I have full power and authority to enter into this assignment.

Signature (Required) _____

PLEASE USE SEPARATE FORM FOR EACH PROPOSAL • NFPA Fax: (617) 770-3500

Mail to: Secretary, Standards Council, National Fire Protection Association, 1 Batterymarch Park, Quincy, MA 02169-7471

8/29/2006

--`,,```,,,,````-`-`,,`,,`,`,,`---

Copyright National Fire Protection Association
Provided by IHS under license with NFPA
No reproduction or networking permitted without license from IHS

Not for Resale