NFPA 268

Standard Test Method for Determining Ignitibility of Exterior Wall Assemblies Using a Radiant Heat Energy Source

2007 Edition

NFPA, 1 Batterymarch Park, Quincy, MA 02169-7471
An International Codes and Standards Organization

Copyright National Fire Protection Association
Provided by IHS under license with NFPA
No reproduction or networking permitted without license from IHS
Not for Resale

IMPORTANT NOTICES AND DISCLAIMERS CONCERNING NFPA DOCUMENTS

NOTICE AND DISCLAIMER OF LIABILITY CONCERNING THE USE OF NFPA DOCUMENTS

NFPA codes, standards, recommended practices, and guides, of which the document contained herein is one, are developed through a consensus standards development process approved by the American National Standards Institute. This process brings together volunteers representing varied viewpoints and interests to achieve consensus on fire and other safety issues. While the NFPA administers the process and establishes rules to promote fairness in the development of consensus, it does not independently test, evaluate, or verify the accuracy of any information or the soundness of any judgments contained in its codes and standards.

The NFPA disclaims liability for any personal injury, property or other damages of any nature whatsoever, whether special, indirect, consequential or compensatory, directly or indirectly resulting from the publication, use of, or reliance on this document. The NFPA also makes no guaranty or warranty as to the accuracy or completeness of any information published herein.

In issuing and making this document available, the NFPA is not undertaking to render professional or other services for or on behalf of any person or entity. Nor is the NFPA undertaking to perform any duty owed by any person or entity to someone else. Anyone using this document should rely on his or her own independent judgment or, as appropriate, seek the advice of a competent professional in determining the exercise of reasonable care in any given circumstances.

The NFPA has no power, nor does it undertake, to police or enforce compliance with the contents of this document. Nor does the NFPA list, certify, test or inspect products, designs, or installations for compliance with this document. Any certification or other statement of compliance with the requirements of this document shall not be attributable to the NFPA and is solely the responsibility of the certifier or maker of the statement.

Copyright National Fire Protection Association
Provided by IHS under license with NFPA
No reproduction or networking permitted without license from IHS
Not for Resale

ADDITIONAL NOTICES AND DISCLAIMERS

Updating of NFPA Documents

Users of NFPA codes, standards, recommended practices, and guides should be aware that these documents may be superseded at any time by the issuance of new editions or may be amended from time to time through the issuance of Tentative Interim Amendments. An official NFPA document at any point in time consists of the current edition of the document together with any Tentative Interim Amendments and any Errata then in effect. In order to determine whether a given document is the current edition and whether it has been amended through the issuance of Tentative Interim Amendments or corrected through the issuance of Errata, consult appropriate NFPA publications such as the National Fire Codes® Subscription Service, visit the NFPA website at www.nfpa.org, or contact the NFPA at the address listed below.

Interpretations of NFPA Documents

A statement, written or oral, that is not processed in accordance with Section 6 of the Regulations Governing Committee Projects shall not be considered the official position of NFPA or any of its Committees and shall not be considered to be, nor be relied upon as, a Formal Interpretation.

Patents

The NFPA does not take any position with respect to the validity of any patent rights asserted in connection with any items which are mentioned in or are the subject of NFPA codes, standards, recommended practices, and guides, and the NFPA disclaims liability for the infringement of any patent resulting from the use of or reliance on these documents. Users of these documents are expressly advised that determination of the validity of any such patent rights, and the risk of infringement of such rights, is entirely their own responsibility.

NFPA adheres to applicable policies of the American National Standards Institute with respect to patents. For further information contact the NFPA at the address listed below.

Law and Regulations

Users of these documents should consult applicable federal, state, and local laws and regulations. NFPA does not, by the publication of its codes, standards, recommended practices, and guides, intend to urge action that is not in compliance with applicable laws, and these documents may not be construed as doing so.

Copyrights

This document is copyrighted by the NFPA. It is made available for a wide variety of both public and private uses. These include both use, by reference, in laws and regulations, and use in private self-regulation, standardization, and the promotion of safe practices and methods. By making this document available for use and adoption by public authorities and private users, the NFPA does not waive any rights in copyright to this document.

Use of NFPA documents for regulatory purposes should be accomplished through adoption by reference. The term "adoption by reference" means the citing of title, edition, and publishing information only. Any deletions, additions, and changes desired by the adopting authority should be noted separately in the adopting instrument. In order to assist NFPA in following the uses made of its documents, adopting authorities are requested to notify the NFPA (Attention: Secretary, Standards Council) in writing of such use. For technical assistance and questions concerning adoption of NFPA documents, contact NFPA at the address below.

For Further Information

All questions or other communications relating to NFPA codes, standards, recommended practices, and guides and all requests for information on NFPA procedures governing its codes and standards development process, including information on the procedures for requesting Formal Interpretations, for proposing Tentative Interim Amendments, and for proposing revisions to NFPA documents during regular revision cycles, should be sent to NFPA headquarters, addressed to the attention of the Secretary, Standards Council, NFPA, 1 Batterymarch Park, P.O. Box 9101, Quincy, MA 02269-9101.

For more information about NFPA, visit the NFPA website at www.nfpa.org.

--`,,```,,,,````-`-`,,`,,`,`,,`---

Copyright National Fire Protection Association
Provided by IHS under license with NFPA
No reproduction or networking permitted without license from IHS Not for Resale

Copyright © 2006 National Fire Protection Association. All Rights Reserved.

NFPA 268

Standard Test Method for

Determining Ignitibility of Exterior Wall Assemblies Using a Radiant Heat Energy Source

2007 Edition

This edition of NFPA 268, *Standard Test Method for Determining Ignitibility of Exterior Wall Assemblies Using a Radiant Heat Energy Source*, was prepared by the Technical Committee on Fire Tests. It was issued by the Standards Council on July 28, 2006, with an effective date of August 17, 2006, and supersedes all previous editions.

This edition of NFPA 268 was approved as an American National Standard on August 17, 2006.

Origin and Development of NFPA 268

The 1996 edition represented the first edition for a standard that addressed the determination of ignitibility characteristics of exterior wall assemblies. The test method incorporated a radiant heat energy source. At the time this document was published, there were no standardized test methods available within the standard writing organizations, and this document complemented the fire test methods available within the NFPA standards. The results of this test can be used to measure and describe properties of materials in controlled laboratory conditions and also can be used as an element of a fire risk assessment.

The 2001 edition incorporated the new format and editorial changes as required to satisfy the *Manual of Style for NFPA Technical Committee Documents*. Revisions to 11.4.2, 11.4.2.1, and 12.1(10)(c) were made to incorporate the specific time period that was originally within the definition. There were no significant revisions made in the 2001 or 2007 editions.

Copyright National Fire Protection Association
Provided by IHS under license with NFPA
No reproduction or networking permitted without license from IHS
Not for Resale

Technical Committee on Fire Tests

William E. Fitch, *Chair*
Omega Point Laboratories, TX [RT]

Jesse J. Beitel, Hughes Associates, Incorporated, MD [SE]
April L. Berkol, Starwood Hotels & Resorts Worldwide, Incorporated, NY [U]
Rep. American Hotel & Lodging Association
Robert G. Bill, Jr., FM Global, MA [I]
John A. Blair, The DuPont Company, DE [M]
Rep. Society of the Plastics Industry, Incorporated
Gordon H. Damant, Inter-City Testing & Consulting Corporation of California, CA [SE]
Thomas W. Fritz, Armstrong World Industries, Incorporated, PA [M]
Pravinray D. Gandhi, Underwriters Laboratories Incorporated, IL [RT]
James R. Griffith, Southwest Research Institute, TX [RT]
Gordon E. Hartzell, Hartzell Consulting, Incorporated, TX [SE]
Marcelo M. Hirschler, GBH International, CA [SE]
Alfred J. Hogan, Reedy Creek Improvement District, FL [E]
Rep. International Fire Marshals Association
William E. Koffel, Koffel Associates, Incorporated, MD [SE]
James R. Lawson, U.S. National Institute of Standards and Technology, MD [RT]
Rodney A. McPhee, Canadian Wood Council, Canada [M]
Frederick W. Mowrer, University of Maryland, MD [SE]
David T. Sheppard, U.S. Department of Justice, MD [RT]
Kuma Sumathipala, American Forest & Paper Association, DC [M]
T. Hugh Talley, Hugh Talley Company, TN [M]
Rep. Upholstered Furniture Action Council
Rick Thornberry, The Code Consortium, Incorporated, CA [SE]
William A. Webb, Schirmer Engineering Corporation, IL [I]
Robert A. Wessel, Gypsum Association, DC [M]
Robert J. Wills, American Iron and Steel Institute, AL [M]
Peter J. Willse, GE Global Asset Protection Services, CT [I]

Alternates

Robert M. Berhinig, Underwriters Laboratories Incorporated, IL [RT]
(Alt. to P. D. Gandhi)
Delbert F. Boring, Jr., American Iron and Steel Institute, OH [M]
(Alt. to R. J. Wills)
Richard J. Davis, FM Global, MA [I]
(Alt. to R. G. Bill, Jr.)
Sam W. Francis, American Forest & Paper Association, PA [M]
(Alt. to K. Sumathipala)
Richard G. Gann, U.S. National Institute of Standards and Technology, MD [RT]
(Alt. to J. R. Lawson)
Paul A. Hough, Armstrong World Industries, Incorporated, PA [M]
(Alt. to T. W. Fritz)
Marc L. Janssens, Southwest Research Institute, TX [RT]
(Alt. to J. R. Griffith)
James K. Lathrop, Koffel Associates, Incorporated, CT [SE]
(Alt. to W. E. Koffel)
James A. Milke, University of Maryland, MD [SE]
(Alt. to F. W. Mowrer)
Arthur J. Parker, Hughes Associates, Incorporated, MD [SE]
(Alt. to J. J. Beitel)
Ronald A. Schulz, GE Global Asset Protection Services, MI [I]
(Alt. to P. J. Willse)
Ineke Van Zeeland, Canadian Wood Council, Canada [M]
(Alt. to R. A. McPhee)
Joe Ziolkowski, American Furniture Manufacturers Association, NC [M]
(Alt. to T. H. Talley)

Nonvoting

Robert H. Barker, American Fiber Manufacturers Association, VA [M]
(Alt. to T. L. Jilg)
Tod L. Jilg, Hoechst Celanese Corporation, NC [M]
Rep. American Fiber Manufacturers Association
Rohit Khanna, U.S. Consumer Product Safety Commission, MD [C]

Milosh Puchovsky, NFPA Staff Liaison

This list represents the membership at the time the Committee was balloted on the final text of this edition. Since that time, changes in the membership may have occurred. A key to classifications is found at the back of the document.

NOTE: Membership on a committee shall not in and of itself constitute an endorsement of the Association or any document developed by the committee on which the member serves.

Committee Scope: This Committee shall have primary responsibility for documents on fire testing procedures, for reviewing existing fire test standards and recommending appropriate action to NFPA, for recommending the application of and advising on the interpretation of acceptable test standards for fire problems of concern to NFPA technical committees and members, and for acting in a liaison capacity between NFPA and the committees of other organizations writing fire test standards. This Committee does not cover fire tests that are used to evaluate extinguishing agents, devices, or systems.

Copyright National Fire Protection Association
Provided by IHS under license with NFPA
No reproduction or networking permitted without license from IHS
Not for Resale

Contents

Chapter 1 Administration **268–** 4
1.1 Scope **268–** 4
1.2 Purpose **268–** 4
1.3 Application **268–** 4
1.4 Units and Formulas **268–** 4
1.5 Precision or Bias **268–** 4

Chapter 2 Referenced Publications **268–** 4
2.1 General **268–** 4
2.2 NFPA Publications. (Reserved) **268–** 4
2.3 Other Publications **268–** 4
2.4 References for Extracts in Mandatory Sections. (Reserved) **268–** 4

Chapter 3 Definitions **268–** 5
3.1 General **268–** 5
3.2 NFPA Official Definitions **268–** 5
3.3 General Definitions **268–** 5
3.4 Testing Terminology **268–** 5

Chapter 4 Summary of Method **268–** 5
4.1 Test Panel Orientation **268–** 5
4.2 Test Setup **268–** 5

Chapter 5 Radiant Panel Apparatus and Specimen Mounting System **268–** 5
5.1 Radiant Panel **268–** 5
5.2 Test Specimen **268–** 6
5.3 Radiation Shield **268–** 6
5.4 Spark Igniter **268–** 8
5.5 Ambient Conditions **268–** 8

Chapter 6 Instrumentation and Documentation ... **268–** 8
6.1 Heat Flux Meter **268–** 8
6.2 Thermocouples **268–** 9
6.3 Photographic Documentation **268–** 9

Chapter 7 Test Specimen and Mounting **268–** 9
7.1 Specimen Detail **268–** 9
7.2 Mounting **268–** 9

Chapter 8 Calibration of the Test Equipment **268–**10
8.1 Calibration **268–**10
8.2 Spacing **268–**10
8.3 Validation **268–**10

Chapter 9 Test Specimen Conditioning **268–**10
9.1 Conditioning **268–**10

Chapter 10 Safety Precautions **268–**10
10.1 Gas Hazard **268–**10
10.2 High Temperature and Pressure **268–**10
10.3 Products of Combustion **268–**10

Chapter 11 Test Procedure **268–**10
11.1 Conditioning **268–**10
11.2 Specimen and Test Equipment **268–**10
11.3 Radiant Panel Preheat **268–**11
11.4 Specimen Exposure **268–**11
11.5 Heat Flux Variation **268–**11

Chapter 12 Report **268–**11
12.1 Information **268–**11

Chapter 13 Calibration **268–**11
13.1 Heat Flux Meters **268–**11

Annex A Explanatory Material **268–**11

Annex B Commentary on Radiant Ignition Test ... **268–**12

Annex C Informational References **268–**14

Index **268–**16

Copyright National Fire Protection Association
Provided by IHS under license with NFPA
No reproduction or networking permitted without license from IHS
Not for Resale

NFPA 268

Standard Test Method for

Determining Ignitibility of Exterior Wall Assemblies Using a Radiant Heat Energy Source

2007 Edition

IMPORTANT NOTE: This NFPA document is made available for use subject to important notices and legal disclaimers. These notices and disclaimers appear in all publications containing this document and may be found under the heading "Important Notices and Disclaimers Concerning NFPA Documents." They can also be obtained on request from NFPA or viewed at www.nfpa.org/disclaimers.

NOTICE: An asterisk (*) following the number or letter designating a paragraph indicates that explanatory material on the paragraph can be found in Annex A.

Changes other than editorial are indicated by a vertical rule beside the paragraph, table, or figure in which the change occurred. These rules are included as an aid to the user in identifying changes from the previous edition. Where one or more complete paragraphs have been deleted, the deletion is indicated by a bullet (•) between the paragraphs that remain.

Information on referenced publications can be found in Chapter 2 and Annex C.

Chapter 1 Administration

1.1 Scope.

1.1.1 This fire test response standard describes a method for determining the propensity of ignition of exterior wall assemblies from exposure to 12.5 kW/m^2 (1.10 Btu/ft^2-sec) radiant heat in the presence of a pilot ignition source.

1.1.2 This test method evaluates the propensity of ignition of an exterior wall assembly where subjected to a minimum radiant heat flux of 12.5 kW/m^2 (1.10 Btu/ft^2-sec). This method determines whether ignition of an exterior wall assembly occurs when the wall is exposed to a specified radiant heat flux, in the presence of a pilot ignition source, during a 20-minute period.

1.1.3 This test method utilizes a gas-fired radiant panel to apply a radiant heat flux of 12.5 kW/m^2 (1.10 Btu/ft^2-sec) to a representative sample of an exterior wall assembly while the test specimen is exposed simultaneously to a pilot ignition source.

1.1.4 This test method applies to exterior wall assemblies having planar, or nearly planar, external surfaces.

1.1.4.1 This method shall not be used to evaluate the fire endurance of wall assemblies, nor shall it be used to evaluate the effect of fires originating within the building or within the exterior wall assemblies.

1.1.4.2 This method shall not be used to evaluate surface flame spread, nor shall it be used to evaluate the influence of openings for their propensity of ignition.

1.2* Purpose. This test shall be used for code and other regulatory purposes, for specification and design purposes, and for research and development activities.

1.3 Application.

1.3.1 This fire test response standard measures and describes the properties of materials, products, or assemblies in response to heat and flame under controlled laboratory conditions and shall not be used to describe or appraise the fire hazard or fire risk of materials, products, or assemblies under actual fire conditions. However, results of this test shall be permitted to be used as an element of a fire risk assessment that takes into account all factors that are pertinent to an assessment of the fire hazard of a particular end use.

1.3.2 In this procedure, the specimens are subjected to one or more specific sets of laboratory test conditions. If different test conditions are substituted, or the end-use conditions are changed, it is not possible for this test to predict all changes in the fire test response characteristics measured. Therefore, the results are valid only for the fire test exposure conditions described in this procedure.

1.3.3 This fire test response standard involves hazardous materials, operations, and equipment. This standard does not address all of the safety problems associated with its applications. It is the responsibility of the user of the standard to establish appropriate safety and health practices and to determine the applicability of the regulatory limitations of the standard prior to use. Safety requirements for specific hazards are provided in Chapter 10.

1.3.4 Ignitibility is the propensity of an assembly to ignite and burn with a sustained flame for at least 5 seconds and is further qualified by considering the length of time from time of initial exposure to occurrence of the sustained flaming.

1.4 Units and Formulas. The values stated in SI units are considered the required values. The values in parentheses are for information only.

1.5* Precision or Bias. This standard does not address either the precision or bias of this test method.

Chapter 2 Referenced Publications

2.1 General. The documents or portions thereof listed in this chapter are referenced within this standard and shall be considered part of the requirements of this document.

2.2 NFPA Publications. (Reserved)

2.3 Other Publications.

2.3.1 ASTM Publications. ASTM International, 100 Barr Harbor Drive, P.O. Box C700, West Conshohocken, PA 19428-2959.

ASTM E 176, *Standard Terminology of Fire Standards*, 1999a.

ASTM E 511, *Standard Test Method for Measuring Heat Flux Using a Copper-Constantan Circular Foil, Heat-Flux Gage*, 1994e.

2.3.2 Other Publications.

Merriam-Webster's Collegiate Dictionary, 11th edition, Merriam-Webster, Springfield, MA, 2003.

2.4 References for Extracts in Mandatory Sections. (Reserved)

Copyright National Fire Protection Association
Provided by IHS under license with NFPA
No reproduction or networking permitted without license from IHS
Not for Resale

Chapter 3 Definitions

3.1 General. The definitions contained in this chapter shall apply to the terms used in this standard. Where terms are not defined in this chapter or within another chapter, they shall be defined using their ordinarily accepted meanings within the context in which they are used. *Merriam-Webster's Collegiate Dictionary*, 11th edition, shall be the source for the ordinarily accepted meaning.

3.2 NFPA Official Definitions.

3.2.1 Shall. Indicates a mandatory requirement.

3.2.2 Should. Indicates a recommendation or that which is advised but not required.

3.3 General Definitions.

3.3.1 Heat Flux. For the purposes of this standard, the rate of heat transferred per unit area to surface, typically expressed in kilowatts/m^2, kilojoules/sec-m^2 or Btu/sec-ft^2.

3.3.2 Heat Flux Meter. An instrument used to measure the level of heat flux energy incident on a surface.

3.3.3 Ignitibility. The propensity for ignition, as measured by the time to sustained flaming, in seconds, at a specified heating flux.

3.3.4 Sustained Flaming. For the purposes of this standard, the uninterrupted existence of a flame on or over the surface of a test specimen for a specified time period.

3.4 Testing Terminology. ASTM E 176, *Standard Terminology of Fire Standards*, shall be referenced for definitions of terms used in this test method.

Chapter 4 Summary of Method

4.1 Test Panel Orientation. The radiant panel and the test specimen shall be oriented in a parallel plane configuration, with the geometric centers of the radiant panel and the test specimen concurrent along a line perpendicular to their surfaces as shown in Figure 4.1.

4.2 Test Setup.

4.2.1 This method shall utilize a 0.91 m × 0.91 m (3 ft × 3 ft) propane-fired radiant panel and a minimum 1.22 m (4 ft) wide × 2.44 m (8 ft) high test specimen.

4.2.2 A spark igniter mounted on the vertical centerline of the test specimen at a point 460 mm (18 in.) above its horizontal centerline and 15.9 mm (⅝ in.) from its surface shall serve as the pilot ignition source.

4.2.3 A radiation shield shall isolate the test specimen from the radiant source prior to the start of the test, during which the radiant panel is ignited and brought to a specified steady-state temperature of 871°C ± 27.8°C (1600°F ± 50°F).

4.2.4 The specified heat flux value shall be controlled by the spacing between the radiant panel and the test specimen.

4.2.5* The test specimen shall be exposed to a "square-wave" radiant heat versus time exposure for 20 minutes.

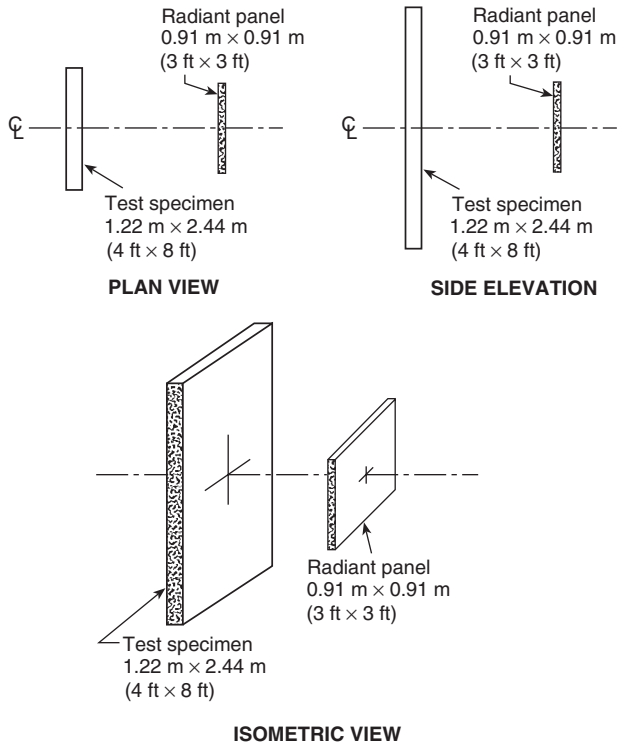

FIGURE 4.1 Spatial Relationship Between the Test Specimen and the Radiant Panel.

Chapter 5 Radiant Panel Apparatus and Specimen Mounting System

5.1* Radiant Panel.

5.1.1 Panel. The radiant panel shall have minimum face dimensions of 0.91 m × 0.91 m (3 ft × 3 ft) and shall consist of an array of individual burner heads, each measuring not less than 152.4 mm × 152.4 mm (6 in. × 6 in.).

5.1.2 Burner Heads.

5.1.2.1 The individual burner heads shall consist of a porous ceramic plate covered by an Inconel™ mesh, or equivalent radiant panel burners.

5.1.2.2 The burner heads shall be fired by a premixed propane–air fuel mixture.

5.1.3 Zones. The gas supply to the burner heads shall be separated into three zones.

5.1.3.1 Each zone shall consist of two horizontal rows of six burner heads.

5.1.3.2 The zone arrangement shall allow the surface of the 0.91 m × 0.91 m (3 ft × 3 ft) radiator to be controlled to produce a relatively uniform temperature.

5.1.3.3 The temperature of each zone of burner heads shall be established by controlling the propane–air fuel mixture pressure supplied to each zone.

Copyright National Fire Protection Association
Provided by IHS under license with NFPA
No reproduction or networking permitted without license from IHS
Not for Resale

5.1.4 Control Equipment. Automatic controls shall be provided to ignite the radiant panel and to shut off the propane gas fuel flow in the event of a misfire.

5.1.5 Mounting. The burner heads and the associated propane and air plumbing and control equipment shall be mounted on a steel platform as shown in Figure 5.1.5(a) and Figure 5.1.5(b).

Exception: Alternate radiant panels shall be permitted, provided the calibration criteria of Sections 8.3(1) and 8.3(2) are met.

5.2 Test Specimen. A minimum 1.22 m (4 ft) wide × 2.44 m (8 ft) high test specimen shall be mounted on a steel frame trolley assembly as shown in Figure 5.2 or equivalent support system.

5.2.1 Mounting Frame. The mounting frame shall hold the test specimen securely in a vertical orientation and shall allow for the spacing between the test specimen and the radiant panel to be adjusted.

5.2.2 Trolley.

5.2.2.1 The specimen trolley shall consist of a 1.22 m × 1.22 m (4 ft × 4 ft) steel base mounted on steel V-groove wheels or an equivalent arrangement.

5.2.2.2 The V-groove wheels shall travel on angle-iron tracks that are mounted securely to the laboratory floor and that incorporate leveling adjusters.

5.2.2.3 A means shall be provided to prevent the trolley from overturning.

5.3 Radiation Shield.

5.3.1 General.

5.3.1.1* A radiation shield shall be used to isolate the test specimen from the radiant panel both before and after the test period.

5.3.1.2 The radiation shield shall consist of a water-cooled panel or other construction that has been shown to have no effect on the specimen or radiator.

5.3.2 Water Coolant. Where a water-cooled shield is used, dual waterflow connections shall supply coolant water to the bottom of the radiation shield.

5.3.2.1 The coolant water shall exit along the top edge of the radiation shield.

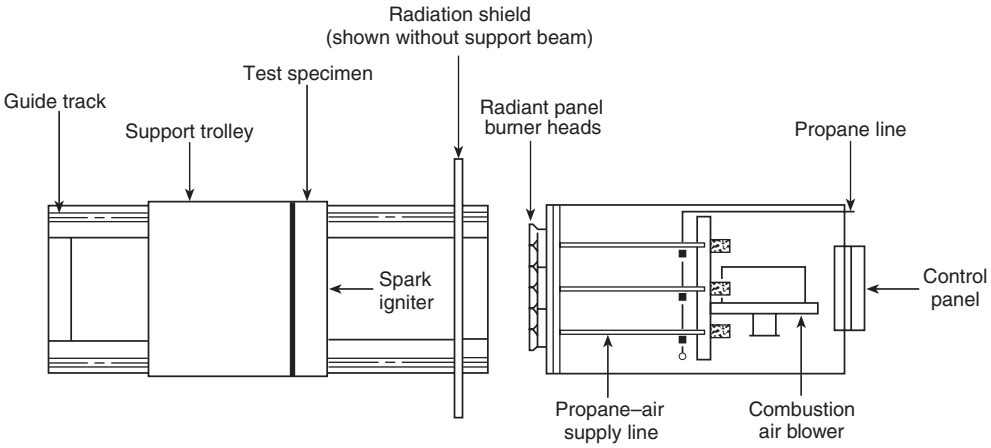

FIGURE 5.1.5(a) Plan View of the Test Apparatus.

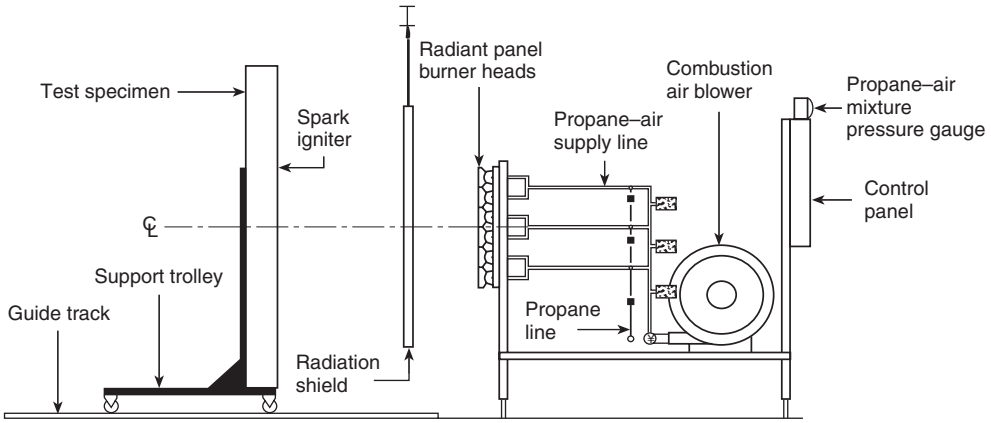

FIGURE 5.1.5(b) Side Elevation of the Test Apparatus.

Copyright National Fire Protection Association
Provided by IHS under license with NFPA
No reproduction or networking permitted without license from IHS
Not for Resale

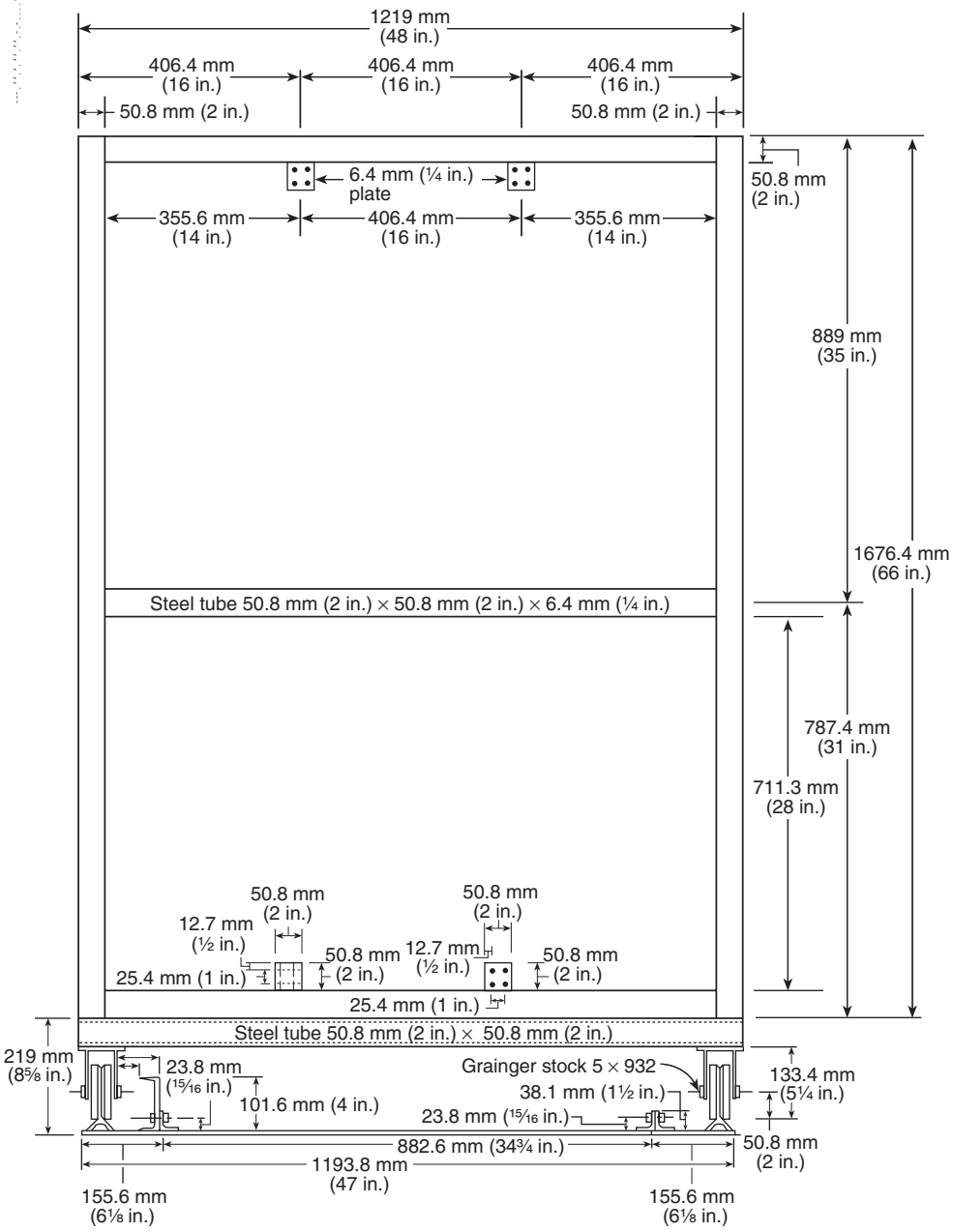

FIGURE 5.2 Front Elevation of the Specimen Trolley and Frame.

5.3.2.2 The water coolant flow shall be either a closed loop or open loop system, depending on the conditions and preference of the individual laboratory.

5.3.2.3 The radiation shield shall be fitted with a pressure gauge and, in closed loop systems, a pressure relief valve.

5.3.2.4 The outlet of the pressure relief valve shall be piped to an area that prevents injury to test personnel in the event of the release of coolant or steam.

5.3.2.5 A thermocouple shall be mounted in the coolant discharge to monitor temperature increase in the coolant during tests.

5.3.2.6 Increases in coolant temperature during tests shall not exceed 56°C (100°F).

5.3.3* Mounting. The radiation shield shall be mounted so that it can be removed quickly or inserted.

5.3.3.1 Prior to the start of the test, the radiation shield shall be inserted between the radiant panel and the test specimen to prevent exposure of the test specimen until the start of the 20-minute exposure.

5.3.3.2 Once the radiant panel has attained its specified steady-state temperature, the radiation shield shall be removed in order to begin the radiant heat exposure period.

Copyright National Fire Protection Association
Provided by IHS under license with NFPA
No reproduction or networking permitted without license from IHS
Not for Resale

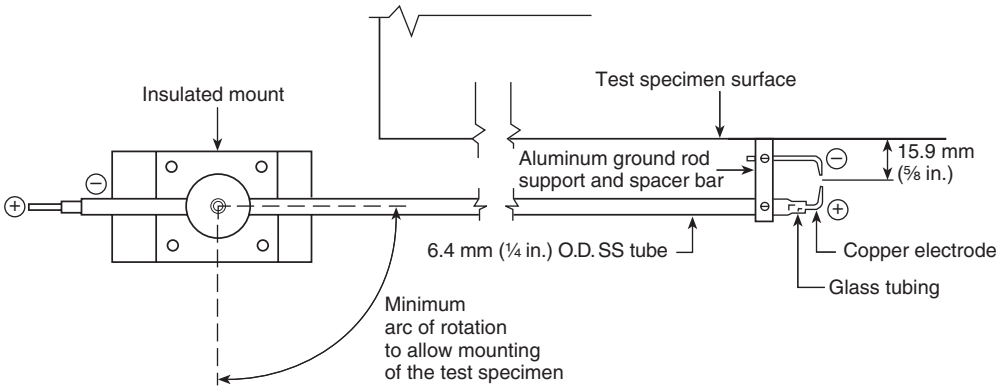

FIGURE 5.4.2.1(a) Plan View of the Spark Igniter.

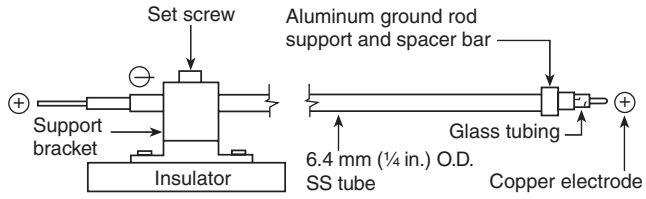

FIGURE 5.4.2.1(b) Side Elevation of the Spark Igniter.

5.4 Spark Igniter.

5.4.1 General. The spark igniter shall consist of two electrodes connected to a nominal 6000-volt energy source.

5.4.2 Placement.

5.4.2.1 The spark igniter electrodes shall extend horizontally from the edge of the test specimen and shall be positioned so that the center of the spark gap is located along the vertical centerline of the test specimen at a location 460 mm ± 3.2 mm (18 in. ± ⅛ in.) above the horizontal centerline of the test specimen with respect to Figure 5.4.2.1(a) and Figure 5.4.2.1(b).

5.4.2.2 The center of the spark gap also shall be located 15.9 mm ± 1.6 mm (⅝ in. ± 1⁄16 in.) away from the surface of the test specimen.

5.4.2.3 Spacing.

5.4.2.3.1 The spark igniter electrodes shall be designed and mounted so that the 15.9 mm ± 1.6 mm (⅝ in. ± 1⁄16 in.) spacing is maintained throughout the test period by a spring tensioner or equivalent arrangement.

5.4.2.3.2 The spacing shall be maintained even if the test specimen surface deforms.

5.4.2.4 The spark igniter electrodes and support structure shall be designed so that the entire cross-sectional area of the design is contained within a 9.5 mm (⅜ in.) projected width.

5.4.2.5 The spark igniter shall be operated so that the duration of the "off" portion of the cycle is no greater than 2 seconds, and the duration of the "on" portion of the cycle is at least 5 seconds.

5.5 Ambient Conditions.

5.5.1 The test shall be conducted within a building vented to discharge combustion products and to intake fresh air so that oxygen-deficient air is not introduced during a test.

5.5.2 Ambient air temperature at the start of the ignitibility test and the calibration test shall be 10°C to 32°C (50°F to 90°F).

5.5.3 The radiant panel apparatus shall be located in a draft-free environment so that volatiles evolving during the course of a test rise vertically adjacent to the surface of the test specimen.

Chapter 6 Instrumentation and Documentation

6.1 Heat Flux Meter.

6.1.1 Locations During Calibration and Product Tests.

6.1.1.1 A heat flux meter for reference use shall be located within 127 mm (5 in.) of the vertical edge of the test specimen on a line along the horizontal centerline of the test specimen, as shown in Figure 6.1.1.1.

6.1.1.2 The exact distance of the heat flux meter from the vertical edge of the test specimen shall be the same as that used for the calibration test.

6.1.1.3 The front face of the heat flux meter shall be in the same plane as the exposed face of the test specimen and shall be parallel to the face of the radiant panel.

6.1.2 Flux Meters. Heat flux meters shall be located in the calibration panel at the five locations specified in Figure 6.1.2.

6.1.3 Specification.

6.1.3.1 The heat flux meters shall be of the Gardon or Schmidt–Boetler type with a flat black surface and a nominal 180 degree view angle.

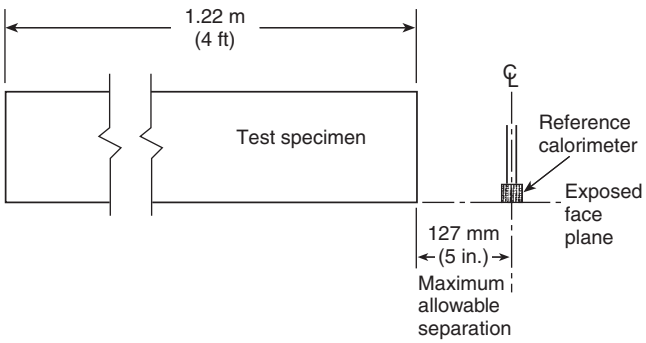

FIGURE 6.1.1.1 Plan View of Reference Calorimeter Location.

Copyright National Fire Protection Association
Provided by IHS under license with NFPA
No reproduction or networking permitted without license from IHS
Not for Resale

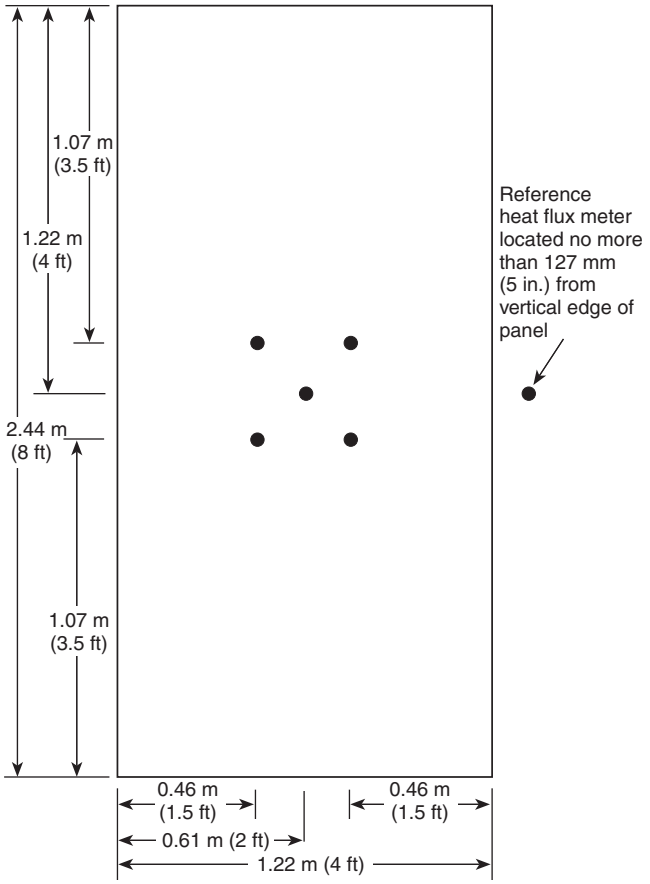

FIGURE 6.1.2 Calibration Panel Heat Flux Meter Locations.

6.1.3.2 The heat flux meters shall be operated at the manufacturer's recommended coolant temperature, and the flow rate for the flux levels shall be measured in accordance with ASTM E 511, *Standard Test Method for Measuring Heat Flux Using a Copper-Constantan Circular Foil, Heat-Flux Gage*.

6.1.3.3 For Schmidt–Boetler heat flux meters, the zero off-set of the heat flux meters at ambient temperature, due to the temperature of the coolant water, shall be added to or subtracted from the heat flux data collected during the calibration tests and the product tests, before calculations are made to determine compliance with this test method.

6.2 Thermocouples.

6.2.1 Locations. A minimum of eight thermocouples shall be installed on the face of the radiant panel, with the termination bead of each thermocouple mounted so that the bead is in contact with the burner screen at the locations specified in Figure 6.2.1.

6.2.2 Specifications. The thermocouples shall be Type K, no smaller than 24 AWG, and no larger than 14 AWG. The thermocouples shall be insulated and capable of continuous operation at a temperature of at least 982°C (1800°F).

6.3 Photographic Documentation.

6.3.1 Photographic or video equipment shall be used to record the performance of the test specimen throughout the test period.

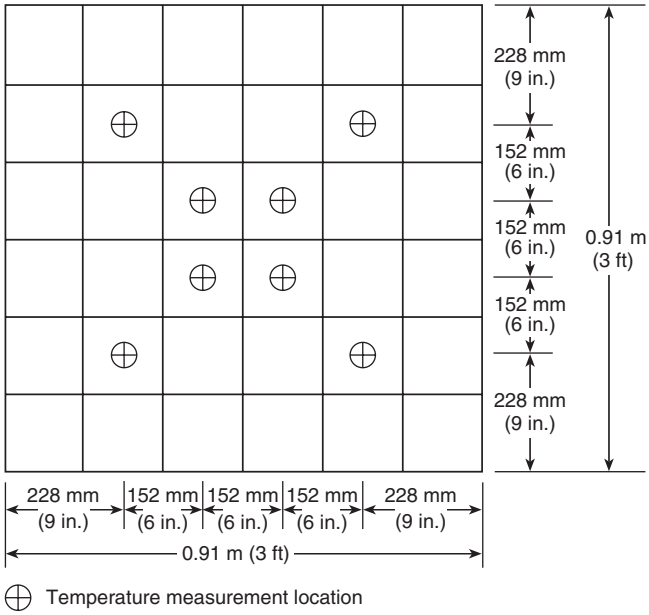

FIGURE 6.2.1 Temperature Measurement Locations on the Face of the Radiant Panel.

6.3.2 The exterior surface of the test specimen shall be marked clearly with a 0.3 m × 0.3 m (1 ft × 1 ft) grid using a contrasting color.

6.3.3 Clock.

6.3.3.1 A clock or other suitable timing device shall be used for photographic records.

6.3.3.2 This clock or timing device shall be synchronized accurately with all other measurements, or other provisions shall be made to correlate the photo record with time.

6.3.4 Film.

6.3.4.1 Color photographs shall be taken at regular intervals for the duration of the test, or a continuous video or film recording shall be made.

6.3.4.2 The camera view area shall include the entire 1.22 m × 2.44 m (4 ft × 8 ft) specimen.

Chapter 7 Test Specimen and Mounting

7.1* Specimen Detail. Test specimens shall be a minimum of 1.22 m × 2.44 m (4 ft × 8 ft) and shall be representative of the overall wall system construction, including finish details, joints, if any, attachments, and support structure.

7.2 Mounting.

7.2.1 Test specimens shall be mounted securely on the trolley assembly with their 2.44 m (8 ft) dimension in a vertical orientation.

7.2.2 The exterior face of the test specimen shall be parallel to the face of the radiant panel and the geometric center of the test specimen.

--`,,```,,,,````-`-`,,`,,`,`,,`---
Copyright National Fire Protection Association
Provided by IHS under license with NFPA
No reproduction or networking permitted without license from IHS
Not for Resale

7.2.3 The geometric center of the radiant panel shall be concurrent with respect to a line drawn perpendicular to the faces of the test specimen and the radiant panel.

Chapter 8 Calibration of the Test Equipment

8.1 Calibration.

8.1.1 A successful calibration test shall have been performed prior to and within 30 days of any ignitibility test.

8.1.2 The calibration test shall last for 20 minutes and shall use the radiant panel to expose a standard calibration panel as detailed in Figure 6.1.2.

8.1.3* The calibration panel shall meet the requirements of 8.1.3.1 and 8.1.3.2.

8.1.3.1 The calibration panel shall consist of two layers having a total thickness of 31.8 mm (1¼ in.).

8.1.3.2 A 12.7 mm (½ in.) low-density, rigid thermal insulation board having a nominal density of 0.23 g/cm^3 to 0.28 g/cm^3 (15 lb/ft^3 to 18 lb/ft^3) shall be mounted to the test frame and covered with one layer of 19.1 mm (¾ in.), 0.74 g/cm^3 (44 lb/ft^3) nominal density calcium silicate insulating material with a thermal conductivity at 177°C (350°F) of 0.128 W/m·K (0.89 Btu·in./h·ft^2·°F).

8.1.4 The data specified in 8.1.4(1) through 8.1.4(4) shall be recorded at intervals no greater than 15 seconds as follows:

(1) The heat flux versus the time curve at each of the five specified heat flux meter locations on the calibration panel surface and the reference heat flux meter at the side-mounted locations *(see Figure 6.1.2)*
(2) The heat flux versus the time curve obtained by averaging the four heat flux meters located at the corners of the central square foot of the calibration panel
(3) The temperatures versus the time on the surface of the radiant panel at the specified locations *(see Figure 6.2.1)*
(4) The average of the temperatures on the surface of the radiant panel at each of the specified locations

8.2 Spacing. The spacing between the exposed face of the calibration panel and the face of the radiant panel shall be recorded.

8.3 Validation. The calibration test shall be considered valid, provided the values specified in 8.3(1) through 8.3(3) are as follows:

(1) The heat flux obtained by averaging the four heat flux meters located at the corners of the central square foot of the calibration panel shall be 12.5 kW/m^2 ± 5 percent (1.10 Btu/ft^2-sec ± 5 percent).
(2) The heat flux at the center of the calibration panel shall not exceed 15 kW/m^2 (1.32 Btu/ft^2-sec) or shall be not less than 12.5 kW/m^2 (1.10 Btu/ft^2-sec).
(3) The average surface temperature of the radiant panel shall be 871°C ± 27.8°C (1600°F ± 50°F) for each thermocouple.

Chapter 9 Test Specimen Conditioning

9.1 Conditioning.

9.1.1 Specimens shall be conditioned to a constant weight at 21.1°C ± 5.6°C (70°F ± 10°F) and a relative humidity of 50 percent ± 10 percent.

9.1.2 The constant weight shall be considered to have been achieved where less than a 0.1 percent change in the measured weight of the test specimen undergoing conditioning is recorded for each of three successive measurements taken three days apart, prior to testing.

Chapter 10 Safety Precautions

10.1 Gas Hazard.

10.1.1 The possibility of a gas–air–fuel explosion in the test apparatus shall be recognized.

10.1.2 Suitable safeguards consistent with sound engineering practice shall be installed in the panel fuel supply system.

10.1.3 These safeguards shall include one or more of the following, as appropriate:

(1) A gas feed cutoff that activates when the air supply fails
(2) A fire sensor directed at the panel surface that stops fuel flow when the panel flame goes out
(3) A commercial gas water heater or gas-fired furnace pilot burner control thermostatic shutoff that activates when the gas supply fails, or other suitable and approved device
(4) A manual reset for any safeguard system used

10.2 High Temperature and Pressure.

10.2.1 The possibility of excess pressure and high temperatures involving the fluid (water) of the heat exchanger used as a radiation shield as detailed in Section 5.3 shall be recognized.

10.2.2 Pressure relief valves piped to a safe location shall be provided.

10.2.3 The design and operation of the radiation shield shall be consistent with sound engineering practice.

10.3 Products of Combustion.

10.3.1 In view of the potential hazard from products of combustion, other laboratory equipment shall be protected from smoke and gas.

10.3.2 Laboratory operators shall be instructed to minimize exposure to combustion products by following sound safety practice (which includes wearing appropriate protective clothing and using insulated gloves).

Chapter 11 Test Procedure

11.1 Conditioning. The specimen shall be tested within 1 hour from the time the specimen is removed from the conditioning room.

11.2 Specimen and Test Equipment. Prior to the start of the test, the status of the following items shall be verified:

(1) The test specimen shall be mounted securely to the trolley assembly and oriented properly with respect to the radiant panel.
(2) The trolley assembly shall be moved to the proper location to provide the required separation distance between the face of the test specimen and the face of the radiant panel, as determined from the most recent calibration test.
(3) The side-mounted reference heat flux meter shall be mounted in its proper orientation and shall be operated at the manufacturer's recommended coolant temperature,

Copyright National Fire Protection Association
Provided by IHS under license with NFPA
No reproduction or networking permitted without license from IHS
Not for Resale

and flow rate for the flux levels shall be measured in accordance with ASTM E 511, *Standard Test Method for Measuring Heat Flux Using a Copper-Constantan Circular Foil, Heat-Flux Gage* . The coolant temperature shall be set high enough to prevent condensation on the sensor prior to the start of the test.

(4) The spark igniter shall be in place and operational.
(5) The radiation shield shall be in place and shall be operated at the proper waterflow rate.
(6) The propane gas supply to the radiant panel shall be of quantity sufficient for the test duration and shall be connected properly.

11.3 Radiant Panel Preheat.

11.3.1 Ten minutes prior to the start of the test period, the radiant panel shall be ignited.

11.3.2 During the 10-minute warm-up period, the radiant panel shall function properly, and its average surface temperature shall be 871°C ± 27.8°C (1600°F ± 50°F).

11.3.3 Data shall be recorded for the surface temperature of the radiant panel and the reference heat flux meter beginning 1 minute prior to the start of the test and shall be continued until the end of the test period.

11.3.4 Thirty seconds prior to the test, the spark igniter shall be turned on and videotaping or photographing of the test assembly shall commence and continue for the test period.

11.4 Specimen Exposure.

11.4.1 Test Start. At time zero, the radiation shield shall be removed and the radiant heat exposure of the test specimen shall begin.

11.4.2 Test Duration. The test shall be continued for 20 minutes unless sustained flaming (ignition) for a period greater than 5 seconds of the test specimen occurs.

11.4.2.1 If sustained flaming (ignition) for a period greater than 5 seconds of the test specimen occurs, the test shall be terminated by inserting the radiation shield between the radiant panel and the test specimen, turning off the spark igniter, extinguishing the test specimen, and interrupting the flow of gas to the radiant panel.

11.4.2.2 If the specimen does not ignite, the test shall be terminated after 20 minutes by inserting the radiant shield between the radiant panel and the test specimen, turning off the spark igniter, and interrupting the flow of gas to the radiant panel.

11.5 Heat Flux Variation. During a test, if the heat flux measured by the reference heat flux meter varies more than ±2.5 percent from the average value recorded during the most recent calibration test, the results shall be invalid.

Chapter 12 Report

12.1 Information. The report shall include the information specified in 12.1(1) through 12.1(11) as follows:

(1) The name, thickness, density, and size of all materials used in the wall construction, along with any other identifying characteristics or labels that are significant in order to identify the construction completely
(2) The construction of the full wall assembly, including finish details, joints, if any, attachments, support structure, and any other details necessary to fully describe the test assembly
(3) A description of the material conditioning
(4) The relative humidity and temperature of the test building prior to and during both the test and the most recent calibration test
(5) The time histories of the eight individual thermocouples mounted on the surface of the radiant panel and the average of the eight thermocouples
(6) The time history of the reference heat flux meter
(7) The distance from the edge of the test specimen to the centerline of the side-mounted reference heat flux meter during both the test and the most recent calibration test
(8) The separation distance between the exposed face of the test specimen and the face of the radiant panel in both the calibration test and the product test
(9) A transcript of the visual observations recorded during the test
(10) A statement regarding flaming or ignition of the specimen, or both, that includes the following:
  (a) The time to sustained flaming, if any
  (b) Observations and the time of occurrence of any transient flaming on or near the surface of the specimen
  (c) If appropriate, a statement indicating that no ignition (sustained flaming) for a period greater than 5 seconds occurred during the 20-minute test period
(11) The average heat flux value recorded at the reference heat flux meter during both the test and the most recent calibration test

Chapter 13 Calibration

13.1 Heat Flux Meters.

13.1.1* Heat flux meters shall be calibrated at least annually by a method that is traceable to the U.S. National Institute of Standards and Technology.

13.1.2 Each laboratory shall be permitted to use a dedicated calibrated reference heat flux meter for the calibration of heat flux meters.

Annex A Explanatory Material

Annex A is not a part of the requirements of this NFPA document but is included for informational purposes only. This annex contains explanatory material, numbered to correspond with the applicable text paragraphs.

A.1.2 Additional information can be found in Section B.1.

A.1.5 Due to the fact that results are not being expressed numerically, a precision and bias statement is not applicable.

A.4.2.5 The method determines whether the test specimen ignites during the 20-minute test period. When sustained flaming for longer than 5 seconds is observed on or near the surface of the test specimen, ignition has occurred.

A.5.1 The following information is being provided for informational purposes only and has not been independently verified, certified, or endorsed by NFPA or any of its technical committees.

Copyright National Fire Protection Association
Provided by IHS under license with NFPA
No reproduction or networking permitted without license from IHS
Not for Resale

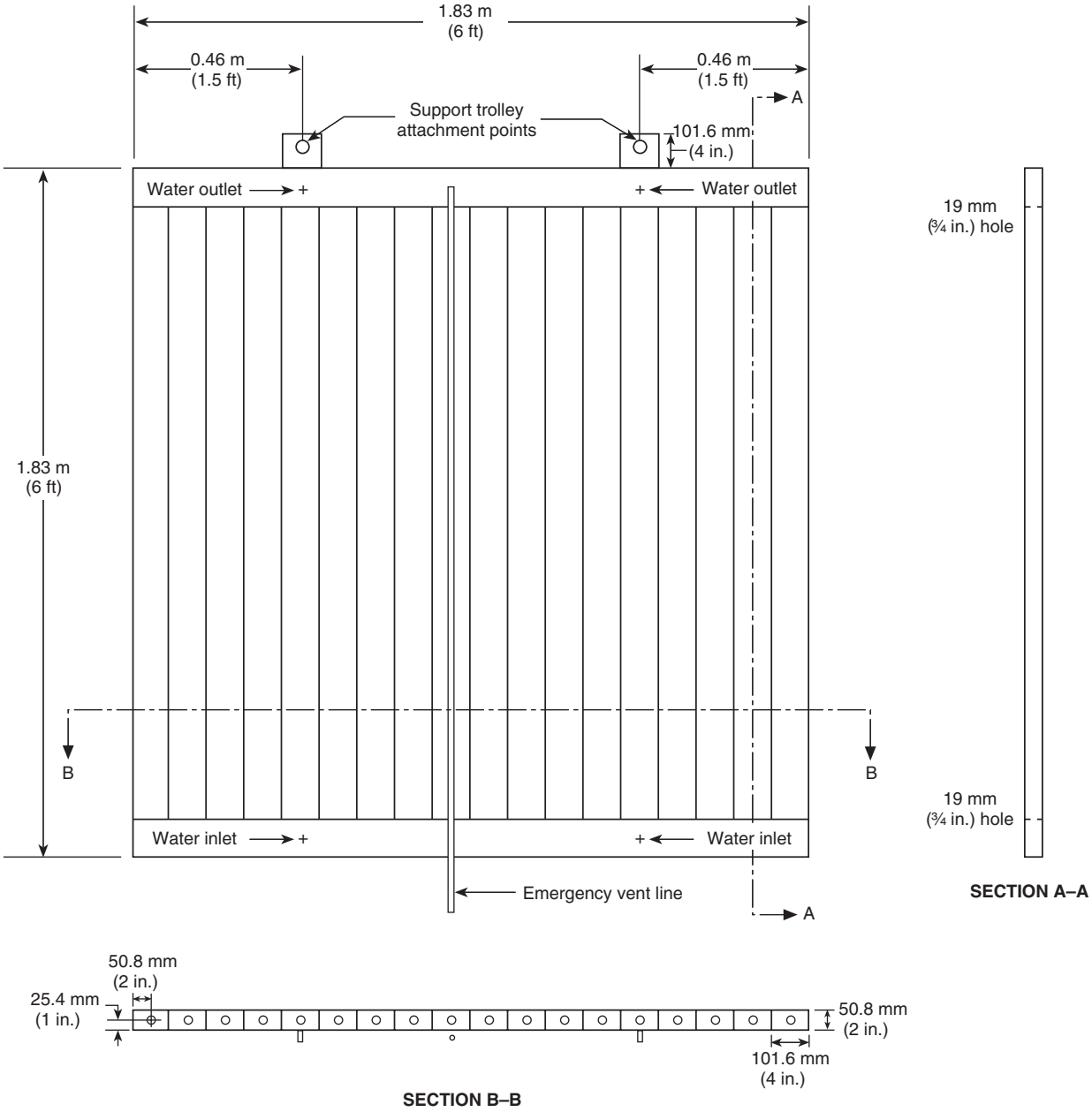

FIGURE A.5.3.1.1 Radiation Shield.

Eclipse Infra-Glo™ or equivalent radiant panel burners manufactured by Eclipse Combustion, Rockford, IL, are considered to be satisfactory.

A.5.3.1.1 Figure A.5.3.1.1 shows one possible arrangement.

A.5.3.3 Figure A.5.3.3 shows one possible arrangement.

A.7.1 The following information is being provided for informational purposes only and has not been independently verified, certified, or endorsed by NFPA or any of its technical committees. Fiberflax Duraboard™ or equivalent can be considered acceptable for low-density rigid thermal insulation board.

A.8.1.3 The following information is being provided for informational purposes only and has not been independently verified, certified, or endorsed by NFPA or any of its technical committees. An acceptable rigid thermal insulation board is Fiberflax Duraboard or equivalent.

A.13.1.1 For additional information, see ASTM E 511, *Standard Test Method for Measuring Heat Flux Using a Copper-Constantan Circular Foil, Heat-Flux Gage.*

Annex B Commentary on Radiant Ignition Test

This annex is not a part of the requirements of this NFPA document but is included for informational purposes only.

Copyright National Fire Protection Association
Provided by IHS under license with NFPA
No reproduction or networking permitted without license from IHS
Not for Resale

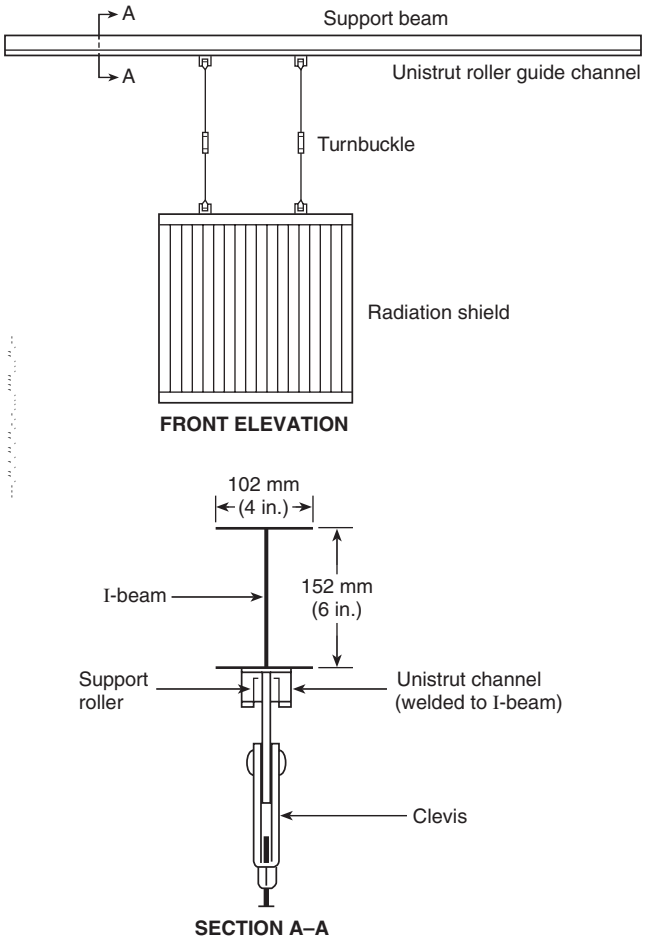

FIGURE A.5.3.3 Radiation Shield Support Trolley.

B.1 Introduction.

B.1.1 Historically, the exterior walls of buildings of large area or of multi-story buildings have been constructed using noncombustible materials. In recent years, the model building codes of the United States have been revised to recognize the use of limited quantities of combustible materials in the exterior walls of buildings traditionally required to use noncombustible materials. The use of combustible materials in exterior walls has raised concerns regarding the possibility of fire spreading from building to building by radiant heat transfer and ignition of the exterior facades.

B.1.2 Model codes contain fire resistance ratings and opening limitations for the exterior walls of buildings, based upon the concept of limiting radiant heat transfer to adjacent buildings. The commonly accepted threshold for piloted ignition of wood is 12.5 kW/m^2 (1.10 Btu/ft^2-sec). The exterior walls of a building should be designed to limit the radiant heat transfer to adjacent structures to 12.5 kW/m^2 (1.10 Btu/ft^2-sec) or less. The basis of the concept is that radiant heat transfer should be limited to values that do not ignite combustible architectural trim, veneer, or exterior facades on adjacent buildings.

B.2 U.S. Model Building Codes. The BOCA *National Building Code* and the SBCCI *Standard Building Code* regulate building facades based on ignitibility characteristics. Exterior facades are regulated as a function of the distance to the property line and on the basis of the radiant heat flux necessary to cause ignition of the facade under "piloted" conditions.

Both the *Standard Building Code* and the *National Building Code* provide summarized descriptions for conducting ignitibility evaluations for exterior wall assemblies. However, no standardized test method for the determination of the ignitibility characteristics of exterior building facades under radiant heat exposure currently exists within the model building codes or ASTM.

B.3 Ignitibility Research.

B.3.1 A research project, sponsored by the Exterior Insulation Manufacturers Association, was conducted to develop a laboratory-scale, radiant heat ignitibility test procedure. The research program consisted of two phases. In the first phase, large-scale tests were run at the Southwest Research Institute to develop a database to be used to judge the reliability of data from laboratory-scale tests of similar specimens.

Large-scale tests used 2.44 m × 3.66 m (8 ft × 12 ft) exterior wall panels that were exposed to radiant heat from a 1.83 m × 2.44 m (6 ft × 8 ft) radiant panel. [1] The radiator and product sizes are believed to be adequate to predict product behavior in actual fires. However, large-scale testing can be needlessly expensive if laboratory-scale or bench-scale tests are shown to be capable of producing data that correlate with large-scale testing.

Specimens similar to those tested in the large-scale apparatus were tested in a laboratory-scale procedure at the University of California at Richmond Field Test Station by Fisher Research and Development, Inc. [2] Specimens for the laboratory-scale tests measured 1.22 m × 2.44 m (4 ft × 8 ft) and were exposed to a 0.91 m × 0.91 m (3 ft × 3 ft) gas-fired radiant panel. To achieve an exposure of 12.5 kW/m^2 (1.10 Btu/ft^2-sec), the specimen was separated from the radiant panel by a distance of 1080 mm to 1100 mm (43 in. to 44 in.). The data from the laboratory-scale tests and the large-scale tests are provided in Table B.3.1. The laboratory-scale test procedure developed by Fisher Research and Development, Inc., has been used as the basis for this standard.

B.3.2 Table B.3.1 shows that the performance of exterior wall systems tested in accordance with this standard correlates well with full-scale test results. The 0.91 m × 0.91 m (3 ft × 3 ft) radiant panel and 1.22 m × 2.44 m (4 ft × 8 ft) specimen are sufficient to reproduce full-scale behavior.

B.3.3 This standard uses a conservative approach by evaluating the ignitibility of specimens under "piloted" conditions. A spark igniter is located at the upper boundary of the specimen area that is subjected to the specified radiant heat exposure. The spark is located in the flow of volatiles that travel up the face of the specimen in the region where the greatest concentration of volatiles has been observed.

B.3.4 This method prescribes the testing of full assemblies. Tests of individual wall components might not be indicative of the behavior of the final assembly.

B.3.5 Use of a bench-scale apparatus might not produce results that correlate with the full-scale behavior of wall assemblies because of "scale effects." [3] For example, many insulated exterior wall systems use expanded polystyrene (thermoplastic) foam insulation. Thermoplastic insulation can shrink away from the fire exposure, thereby changing test

Copyright National Fire Protection Association
Provided by IHS under license with NFPA
No reproduction or networking permitted without license from IHS
Not for Resale

Table B.3.1 Summary of the Radiant Heat Exposure Test Results

Description of the Wall Construction	Exposure Heat Flux (kW/m^2)	Time to Ignition (sec)		
		Cone Calorimeter	Lab Scale	Full Scale
EIFS (thin coat, mineral wool core)	12.5	No	322	No
EIFS (thin coat, mineral wool core)	20	199	150	163
EIFS (thin coat, 2 in. expanded P.S.)	12.5	No	No	No
EIFS (thin coat, 2 in. expanded P.S.)	20	140	134	139
EIFS (thin coat, 2 in. expanded P.S.)	12.5	No test	No	No
EIFS (thin coat, 2 in. expanded P.S.)	12.5	No test	No	270
EIFS (thin coat, 2 in. expanded P.S.)	20	No test	117	135
EIFS (thin coat, 2 in. expanded P.S.)	12.5	No	235	280
EIFS (thin coat, 2 in. expanded P.S.)	20	218	83	85
EIFS (thin coat, 1 in. expanded P.S.)	12.5	No	No	No
EIFS (thin coat, 1 in. expanded P.S.)	20	209	185	140
EIFS (thin coat, 1 in. expanded P.S.)	12.5	No	No	No
EIFS (thin coat, 1 in. expanded P.S.)	20	186	130	116
EIFS (thick coat, 2 in. extruded P.S.)	12.5	No	No	No
EIFS (thick coat, 2 in. extruded P.S.)	20	No	No	771
EIFS (thick coat, 2 in. extruded P.S.)	12.5	No	No	No
EIFS (thick coat, 2 in. extruded P.S.)	20	No	Malfunc.	570
EIFS (thin coat, 4 in. expanded P.S.)	12.5	No	250	No
EIFS (thin coat, 4 in. expanded P.S.)	20	158	89	86
EIFS (thin coat, 1 in. isocyanurate)	12.5	355	200	222
EIFS (thin coat, 1 in. isocyanurate)	20	138	Ramped	105
EIFS (thin coat, no insulation)	12.5	No	No	No
EIFS (thin coat, no insulation)	20	137	80	99
⅝ in. × 4 in. thick exterior gypsum board	12.5	No	No	No
⅝ in. × 4 in. thick exterior gypsum board	20	No test	No test	1336
⅝ in. × 4 in. thick T1-11 plywood	12.5	No	1100	819
⅝ in. × 4 in. thick T1-11 plywood	20	197	333	191

For SI units, 1 in. = 25.4 mm, 1 kW/m^2 = 5.28 Btu/ft^2-sec.

geometry and exposure conditions. Changes in exposure conditions can be magnified in bench-scale tests, as compared to full-scale tests. Furthermore, there could be a minimum test specimen area (larger than bench scale) that needs to be exposed in order for some specimens to produce sufficient volatiles to reach a flammable mixture with air. This test method carefully prescribes radiant panel size and operating conditions. Radiant panel specifications are set to standardize the "flux map" on the face of test specimens. This method could be used for regulatory purposes, and, consequently, it is important that exposure conditions from apparatus to apparatus be standardized. Significantly changing the size or shape of the radiant panel, for example, results in a different flux profile over the face of the test specimen and can produce varying results. Similarly, a change in the operating temperature of the radiant panel, which, in turn, would necessitate a change in the separation of the radiant panel and the test specimen, results in a change in the configuration factor. The change in configuration factor produces a different flux profile.

B.3.6 To respond to the needs of the U.S. model building codes, this apparatus has been standardized to operate at a single exposure condition: 12.5 kW/m^2 (1.10 Btu/ft^2-sec). The apparatus could be recalibrated for different exposure conditions. However, such changes would necessitate additional research. For example, an apparatus has been developed to evaluate the performance of wall assemblies under radiant heat exposure. Sufficient separation of the radiant panel and the test specimen need to be maintained to avoid convective heat transfer. Avoidance of convective heat transfer establishes a limit for exposures in this apparatus. The limits of the exposure conditions possible with this apparatus have not been determined.

B.3.7 References.

[1] Beitel, Jesse J., "Large-Scale Radiant Heat Exposure Tests of Exterior Insulated Finish Systems," Final Report, SwRI Project No. O1-3528, June 1991.

[2] Fisher, Fred L. and Charles M. Fleishmann, "Radiant Heat Exposure of Exterior Walls," Final Report, Project No. FRD8933, October 1992.

[3] Grand, Arthur F. and Anthony J. Valys, "Report on Cone Calorimeter Time to Ignition Test," Final Report, SwRI Project No. 01-3782-022, September 20, 1991.

Annex C Informational References

C.1 Referenced Publications. The documents or portions thereof listed in this annex are referenced within the informational sections of this standard and are not part of the requirements of this document unless also listed in Chapter 2 for other reasons.

--`,,```,,,,````-`-`,,`,,`,`,,`---

Copyright National Fire Protection Association
Provided by IHS under license with NFPA
No reproduction or networking permitted without license from IHS
Not for Resale

C.1.1 NFPA Publications. (Reserved)

C.1.2 Other Publications.

C.1.2.1 ASTM Publications. ASTM International, 100 Barr Harbor Drive, P.O. Box C700, West Conshohocken, PA 19428-2959.

ASTM E 511, *Standard Test Method for Measuring Heat Flux Using a Copper-Constantan Circular Foil, Heat-Flux Gage*, 1994e.

C.1.2.2 BOCA Publications. Building Officials and Code Administrators International, Inc., 4051 West Flossmoor Road, Country Club Hills, IL 60478-5795.

National Building Code, 1999.

C.1.2.3 SBCCI Publications. Southern Building Code Congress International, Inc., 900 Montclair Road, Birmingham, AL 35213-1206.

Standard Building Code, 1999.

C.2 Informational References. (Reserved)

C.3 References for Extracts in Informational Sections. (Reserved)

Copyright National Fire Protection Association
Provided by IHS under license with NFPA
No reproduction or networking permitted without license from IHS
Not for Resale

Index

Copyright © 2006 National Fire Protection Association. All Rights Reserved.

The copyright in this index is separate and distinct from the copyright in the document that it indexes. The licensing provisions set forth for the document are not applicable to this index. This index may not be reproduced in whole or in part by any means without the express written permission of NFPA.

-A-

Air, intake of 5.5.1
Ambient conditions ..... 5.5, 12.1(4)
Application of standard 1.3

-B-

Bias of test method 1.5, A.1.5
Burner heads 5.1.1, 5.1.2
Mounting 5.1.5
Zones 5.1.3

-C-

Calibration of heat flux meters 13.1, A.13.1.1
Calibration of test equipment ..... Chap. 8
Construction of panel 8.1.3, A.8.1.3
Heat flux meter used for 6.1
Records ..... 8.1.4, 12.1(4), 12.1(7), 12.1(8), 12.1(11)
Spacing of calibration panel and radiation panel 8.2
Timing of 8.1.1, 8.1.2
Validation 8.3
Combustible materials, use in exterior walls of B.1.1
Combustion products, discharge of 5.5.1, 10.3
Commentary ..... Annex B
Control equipment 5.1.4

-D-

Definitions ..... Chap. 3
Documentation
Photographic 6.3, 11.3.4
Test reports ..... Chap. 12
Draft-free environment 5.5.3

-F-

Fire sensors ..... 10.1.3(2)
Formulas 1.4

-G-

Gas feed cutoff ..... 10.1.3(1)
Gas hazard 10.1

-H-

Hazards ..... Chap. 10
Heat flux
Definition 3.3.1
Variation 11.5
Heat flux meter ..... 6.1, 11.2(3), 11.3.3, 11.5, 12.1(6), 12.1(7), 12.1(11)
Calibration of 13.1, A.13.1.1
Definition 3.3.2
High pressure hazard 10.2
High temperature hazard 10.2

-I-

Ignitibility
Definition 3.3.3
Research B.3
Instrumentation 6.1, 6.2

-L-

Large-scale tests ..... B.3.1 to B.3.4

-M-

Measurements, units of 1.4
Model building codes B.1, B.2

-P-

Photographic documentation 6.3, 11.3.4
Precision of test method 1.5, A.1.5
Pressure, high 10.2
Pressure relief valves 5.3.2.3, 5.3.2.4, 10.2.2
Procedure, test ..... Chap. 11
Propane gas supply ..... 5.1.2.2, 5.1.3.3, 11.2(6)
Purpose of standard 1.2, A.1.2

-R-

Radiant panel 5.1, A.5.1, B.3.1
Calibration panel location and 8.2
Distance from specimen ..... 11.2(2), 12.1(8), B.3.6
Gas flow to ..... 11.2(6)
Heat flux meter location and 6.1.1
Location 5.5.3
Orientation ..... 4.1, 11.2(1)
Preheat 11.3
Setup 4.2, A.4.2.5
Thermocouples located on 6.2.1
Radiation shield ..... 5.3, 10.2.1, 10.2.2, 11.2(5), 11.4.1, 11.4.2.1, 11.4.2.2, A.5.3.1.1, A.5.3.3
References ..... Chap. 2, Annex C
Report ..... Chap. 12

-S-

Safety precautions ..... Chap. 10
Scope of standard 1.1
Shall (definition) 3.2.1
Should (definition) 3.2.2
SI units 1.4
Spark igniter ..... 5.4, 11.2(4), 11.3.4, 11.4.2.1, 11.4.2.2, B.3.3
Specimen 5.2
Conditioning ..... Chap. 9, 11.1
Detail 7.1, A.7.1
Distance from heat flux meter ..... 12.1(7)
Distance from radiant panel ..... 11.2(2), 12.1(8), B.3.6
Exposure 11.4
Flaming (ignition) ..... 11.4.2, 12.1(10)
Heat flux meter located near 6.1.1
Mounting ..... 5.2.1, 7.2, 11.2(1)
Orientation ..... 4.1, 11.2(1)
Setup 4.2, A.4.2.5
Trolley 5.2.2
Summary of method ..... Chap. 4
Sustained flaming (ignition) ..... 11.4.2, 12.1(10)
Definition 3.3.4

-T-

Temperature
Ambient air ..... 5.5.2, 12.1(4)

Copyright National Fire Protection Association
Provided by IHS under license with NFPA
No reproduction or networking permitted without license from IHS
Not for Resale

Coolant ..... 11.2(3)
High, hazard of 10.2
Testing terminology 3.4
Test method ..... Chap. 11, B.3; *see also* Radiant panel; Specimen
Instrumentation 6.1, 6.2
Setup 4.2, A.4.2.5
Summary of ..... Chap. 4
Validity of results 11.5
Test panel .....*see* Radiant panel
Test results, summary of B.3.1
Test specimen .....*see* Specimen
Thermocouples ..... 5.3.2.5, 6.2, 12.1(5)
Thermostatic shutoff ..... 10.1.3(3)

-U-

Units of measurement 1.4
U.S. model building codes B.1, B.2

-V-

Validity of results
Calibration test 8.3
Product test 11.5
Valves, pressure relief 5.3.2.3, 5.3.2.4, 10.2.2
Videotaping 11.3.4

-W-

Water coolant ..... 5.3.2, 11.2(3)

--`,,```,,,,````-`-`,,`,,`,`,,`---

Copyright National Fire Protection Association
Provided by IHS under license with NFPA
No reproduction or networking permitted without license from IHS
Not for Resale

Sequence of Events Leading to Issuance of an NFPA Committee Document

Step 1: Call for Proposals

- Proposed new Document or new edition of an existing Document is entered into one of two yearly revision cycles, and a Call for Proposals is published.

Step 2: Report on Proposals (ROP)

- Committee meets to act on Proposals, to develop its own Proposals, and to prepare its Report.
- Committee votes by written ballot on Proposals. If two-thirds approve, Report goes forward. Lacking two-thirds approval, Report returns to Committee.
- Report on Proposals (ROP) is published for public review and comment.

Step 3: Report on Comments (ROC)

- Committee meets to act on Public Comments to develop its own Comments, and to prepare its report.
- Committee votes by written ballot on Comments. If two-thirds approve, Report goes forward. Lacking two-thirds approval, Report returns to Committee.
- Report on Comments (ROC) is published for public review.

Step 4: Technical Report Session

- "*Notices of intent to make a motion"* are filed, are reviewed, and valid motions are certified for presentation at the Technical Report Session. ("Consent Documents" that have no certified motions bypass the Technical Report Session and proceed to the Standards Council for issuance.)
- NFPA membership meets each June at the Annual Meeting Technical Report Session and acts on Technical Committee Reports (ROP and ROC) for Documents with "certified amending motions."
- Committee(s) vote on any amendments to Report approved at NFPA Annual Membership Meeting.

Step 5: Standards Council Issuance

- Notification of intent to file an appeal to the Standards Council on Association action must be filed within 20 days of the NFPA Annual Membership Meeting.
- Standards Council decides, based on all evidence, whether or not to issue Document or to take other action, including hearing any appeals.

Committee Membership Classifications

The following classifications apply to Technical Committee members and represent their principal interest in the activity of the committee.

M *Manufacturer:* A representative of a maker or marketer of a product, assembly, or system, or portion thereof, that is affected by the standard.

U *User:* A representative of an entity that is subject to the provisions of the standard or that voluntarily uses the standard.

I/M *Installer/Maintainer:* A representative of an entity that is in the business of installing or maintaining a product, assembly, or system affected by the standard.

L *Labor:* A labor representative or employee concerned with safety in the workplace.

R/T *Applied Research/Testing Laboratory:* A representative of an independent testing laboratory or independent applied research organization that promulgates and/or enforces standards.

E *Enforcing Authority:* A representative of an agency or an organization that promulgates and/or enforces standards.

I *Insurance:* A representative of an insurance company, broker, agent, bureau, or inspection agency.

C *Consumer:* A person who is, or represents, the ultimate purchaser of a product, system, or service affected by the standard, but who is not included in the *User* classification.

SE *Special Expert:* A person not representing any of the previous classifications, but who has a special expertise in the scope of the standard or portion thereof.

NOTES;
1. "Standard" connotes code, standard, recommended practice, or guide.
2. A representative includes an employee.
3. While these classifications will be used by the Standards Council to achieve a balance for Technical Committees, the Standards Council may determine that new classifications of members or unique interests need representation in order to foster the best possible committee deliberations on any project. In this connection, the Standards Council may make appointments as it deems appropriate in the public interest, such as the classification of "Utilities" in the National Electrical Code Committee.
4. Representatives of subsidiaries of any group are generally considered to have the same classification as the parent organization.

Copyright National Fire Protection Association
Provided by IHS under license with NFPA
No reproduction or networking permitted without license from IHS
Not for Resale

NFPA Technical Committee Document Proposal Form

NOTE: All Proposals must be received by 5:00 p.m. EST/EDST on the published Proposal Closing Date.

For further information on the standards-making process, please contact the Codes and Standards Administration at 617-984-7249.

For technical assistance, please call NFPA at 617-770-3000.

FOR OFFICE USE ONLY

Log #:

Date Rec'd:

Please indicate in which format you wish to receive your ROP/ROC ☐ **electronic** ☐ **paper** ☒ **download**
(Note: If choosing the download option, you must view the ROP/ROC from our website; no copy will be sent to you.)

Date April 1, 200X **Name** John J. Doe **Tel. No.** 716-555-1234

Company Air Canada Pilot's Association

Street Address 123 Summer Street Lane **City** Lewiston **State** NY **Zip** 14092

Please indicate organization represented (if any)

1. (a) NFPA Document Title National Fuel Gas Code **NFPA No. & Year** 54, 200X Edition

(**b) Section/Paragraph** 3.3

2. Proposal Recommends (check one): ☐ new text ☒ revised text ☐ deleted text

3. Proposal (include proposed new or revised wording, or identification of wording to be deleted): [Note: Proposed text should be in legislative format, i.e., use underscore to denote wording to be inserted (inserted wording) and strike-through to denote wording to be deleted (~~deleted wording~~).]

Revise definition of effective ground-fault current path to read:

3.3.78 Effective Ground-Fault Current Path. An intentionally constructed, permanent, low impedance electrically conductive path designed and intended to carry ~~underground~~ electric fault current ~~conditions~~ from the point of a ground fault on a wiring system to the electrical supply source.

4. Statement of Problem and Substantiation for Proposal: (Note: State the problem that would be resolved by your recommendation; give the specific reason for your Proposal, including copies of tests, research papers, fire experience, etc. If more than 200 words, it may be abstracted for publication.)

Change uses proper electrical terms.

5. Copyright Assignment

(a) ☐ **I am the author of the text or other material (such as illustrations, graphs) proposed in this Proposal.**

(b) ☒ **Some or all of the text or other material proposed in this Proposal was not authored by me. Its source is as follows** (please identify which material and provide complete information on its source)**:**

ABC Co.

I hereby grant and assign to NFPA all and full rights in copyright in this Proposal and understand that I acquire no rights in any publication of NFPA in which this Proposal in this or another similar or analogous form is used. Except to the extent that I do not have authority to make an assignment in materials that I have identified in (b) above, I hereby warrant that I am the author of this Proposal and that I have full power and authority to enter into this assignment.

Signature (Required)

PLEASE USE SEPARATE FORM FOR EACH PROPOSAL • NFPA Fax: (617) 770-3500
Mail to: Secretary, Standards Council, National Fire Protection Association, 1 Batterymarch Park, Quincy, MA 02169-7471

8/29/2006

SAMPLE

Copyright National Fire Protection Association
Provided by IHS under license with NFPA
No reproduction or networking permitted without license from IHS
Not for Resale

NFPA Technical Committee Document Proposal Form

NOTE: All Proposals must be received by 5:00 p.m. EST/EDST on the published Proposal Closing Date.

For further information on the standards-making process, please contact the Codes and Standards Administration at 617-984-7249.

For technical assistance, please call NFPA at 617-770-3000.

FOR OFFICE USE ONLY

Log #: _____

Date Rec'd: _____

Please indicate in which format you wish to receive your ROP/ROC ☐ electronic ☐ paper ☐ download
(Note: If choosing the download option, you must view the ROP/ROC from our website; no copy will be sent to you.)

Date _____ **Name** _____ **Tel. No.** _____

Company _____

Street Address _____ **City** _____ **State** _____ **Zip** _____

Please indicate organization represented (if any) _____

1. (a) NFPA Document Title _____ **NFPA No. & Year** _____

(**b) Section/Paragraph** _____

2. Proposal Recommends (check one): ☐ new text ☐ revised text ☐ deleted text

3. Proposal (include proposed new or revised wording, or identification of wording to be deleted): [Note: Proposed text should be in legislative format, i.e., use underscore to denote wording to be inserted (inserted wording) and strike-through to denote wording to be deleted (~~deleted wording~~).]

4. Statement of Problem and Substantiation for Proposal: (Note: State the problem that would be resolved by your recommendation; give the specific reason for your Proposal, including copies of tests, research papers, fire experience, etc. If more than 200 words, it may be abstracted for publication.)

5. Copyright Assignment

(a) ☐ I am the author of the text or other material (such as illustrations, graphs) proposed in this Proposal.

(b) ☐ Some or all of the text or other material proposed in this Proposal was not authored by me. Its source is as follows (please identify which material and provide complete information on its source)**:**

_____

I hereby grant and assign to NFPA all and full rights in copyright in this Proposal and understand that I acquire no rights in any publication of NFPA in which this Proposal in this or another similar or analogous form is used. Except to the extent that I do not have authority to make an assignment in materials that I have identified in (b) above, I hereby warrant that I am the author of this Proposal and that I have full power and authority to enter into this assignment.

Signature (Required) _____

PLEASE USE SEPARATE FORM FOR EACH PROPOSAL • NFPA Fax: (617) 770-3500

Mail to: Secretary, Standards Council, National Fire Protection Association, 1 Batterymarch Park, Quincy, MA 02169-7471

8/29/2006

Copyright National Fire Protection Association
Provided by IHS under license with NFPA
No reproduction or networking permitted without license from IHS
Not for Resale