NFPA 266

Standard Method of Test for Fire Characteristics of Upholstered Furniture Exposed to Flaming Ignition Source

1998 Edition

National Fire Protection Association, 1 Batterymarch Park, PO Box 9101, Quincy, MA 02269-9101
An International Codes and Standards Organization

Copyright National Fire Protection Association
Provided by IHS under license with NFPA
No reproduction or networking permitted without license from IHS
Not for Resale

Copyright ©
National Fire Protection Association, Inc.
One Batterymarch Park
Quincy, Massachusetts 02269

IMPORTANT NOTICE ABOUT THIS DOCUMENT

NFPA codes, standards, recommended practices, and guides, of which the document contained herein is one, are developed through a consensus standards development process approved by the American National Standards Institute. This process brings together volunteers representing varied viewpoints and interests to achieve consensus on fire and other safety issues. While the NFPA administers the process and establishes rules to promote fairness in the development of consensus, it does not independently test, evaluate, or verify the accuracy of any information or the soundness of any judgments contained in its codes and standards.

The NFPA disclaims liability for any personal injury, property or other damages of any nature whatsoever, whether special, indirect, consequential or compensatory, directly or indirectly resulting from the publication, use of, or reliance on this document. The NFPA also makes no guaranty or warranty as to the accuracy or completeness of any information published herein.

In issuing and making this document available, the NFPA is not undertaking to render professional or other services for or on behalf of any person or entity. Nor is the NFPA undertaking to perform any duty owed by any person or entity to someone else. Anyone using this document should rely on his or her own independent judgment or, as appropriate, seek the advice of a competent professional in determining the exercise of reasonable care in any given circumstances.

The NFPA has no power, nor does it undertake, to police or enforce compliance with the contents of this document. Nor does the NFPA list, certify, test or inspect products, designs, or installations for compliance with this document. Any certification or other statement of compliance with the requirements of this document shall not be attributable to the NFPA and is solely the responsibility of the certifier or maker of the statement.

NOTICES

All questions or other communications relating to this document and all requests for information on NFPA procedures governing its codes and standards development process, including information on the procedures for requesting Formal Interpretations, for proposing Tentative Interim Amendments, and for proposing revisions to NFPA documents during regular revision cycles, should be sent to NFPA headquarters, addressed to the attention of the Secretary, Standards Council, National Fire Protection Association, 1 Batterymarch Park, P.O. Box 9101, Quincy, MA 02269-9101.

Users of this document should be aware that this document may be amended from time to time through the issuance of Tentative Interim Amendments, and that an official NFPA document at any point in time consists of the current edition of the document together with any Tentative Interim Amendments then in effect. In order to determine whether this document is the current edition and whether it has been amended through the issuance of Tentative Interim Amendments, consult appropriate NFPA publications such as the *National Fire Codes*® Subscription Service, visit the NFPA website at www.nfpa.org, or contact the NFPA at the address listed above.

A statement, written or oral, that is not processed in accordance with Section 5 of the Regulations Governing Committee Projects shall not be considered the official position of NFPA or any of its Committees and shall not be considered to be, nor be relied upon as, a Formal Interpretation.

The NFPA does not take any position with respect to the validity of any patent rights asserted in connection with any items which are mentioned in or are the subject of this document, and the NFPA disclaims liability for the infringement of any patent resulting from the use of or reliance on this document. Users of this document are expressly advised that determination of the validity of any such patent rights, and the risk of infringement of such rights, is entirely their own responsibility.

Users of this document should consult applicable federal, state, and local laws and regulations. NFPA does not, by the publication of this document, intend to urge action that is not in compliance with applicable laws, and this document may not be construed as doing so.

--```,,,-`-`,,`,,`,`,,`---

Copyright National Fire Protection Association
Provided by IHS under license with NFPA
No reproduction or networking permitted without license from IHS
Not for Resale

Licensing Policy

This document is copyrighted by the National Fire Protection Association (NFPA). By making this document available for use and adoption by public authorities and others, the NFPA does not waive any rights in copyright to this document.

1. Adoption by Reference—Public authorities and others are urged to reference this document in laws, ordinances, regulations, administrative orders, or similar instruments. Any deletions, additions, and changes desired by the adopting authority must be noted separately. Those using this method are requested to notify the NFPA (Attention: Secretary, Standards Council) in writing of such use. The term "adoption by reference" means the citing of title and publishing information only.

2. Adoption by Transcription—A. Public authorities with lawmaking or rule-making powers only, upon written notice to the NFPA (Attention: Secretary, Standards Council), will be granted a royalty-free license to print and republish this document in whole or in part, with changes and additions, if any, noted separately, in laws, ordinances, regulations, administrative orders, or similar instruments having the force of law, provided that: (1) due notice of NFPA's copyright is contained in each law and in each copy thereof; and (2) that such printing and republication is limited to numbers sufficient to satisfy the jurisdiction's lawmaking or rule-making process. **B.** Once this NFPA Code or Standard has been adopted into law, all printings of this document by public authorities with lawmaking or rule-making powers or any other persons desiring to reproduce this document or its contents as adopted by the jurisdiction in whole or in part, in any form, upon written request to NFPA (Attention: Secretary, Standards Council), will be granted a nonexclusive license to print, republish, and vend this document in whole or in part, with changes and additions, if any, noted separately, provided that due notice of NFPA's copyright is contained in each copy. Such license shall be granted only upon agreement to pay NFPA a royalty. This royalty is required to provide funds for the research and development necessary to continue the work of NFPA and its volunteers in continually updating and revising NFPA standards. Under certain circumstances, public authorities with lawmaking or rule-making powers may apply for and may receive a special royalty where the public interest will be served thereby.

3. Scope of License Grant—The terms and conditions set forth above do not extend to the index of this document.

(For further explanation, see the Policy Concerning the Adoption, Printing, and Publication of NFPA Documents, which is available upon request from the NFPA.)

--```,,,-`-`,,`,,`,`,,`---

Copyright National Fire Protection Association
Provided by IHS under license with NFPA
No reproduction or networking permitted without license from IHS

Not for Resale

Copyright © 1998 NFPA, All Rights Reserved

NFPA 266

Standard Method of Test for

Fire Characteristics of Upholstered Furniture Exposed to Flaming Ignition Source

1998 Edition

This edition of NFPA 266, *Standard Method of Test for Fire Characteristics of Upholstered Furniture Exposed to Flaming Ignition Source*, was prepared by the Technical Committee on Fire Tests and acted on by the National Fire Protection Association, Inc., at its Fall Meeting held November 17–19, 1997, in Kansas City, MO. It was issued by the Standards Council on January 16, 1998, with an effective date of February 6, 1998, and supersedes all previous editions.

Changes other than editorial are indicated by a vertical rule in the margin of the pages on which they appear. These lines are included as an aid to the user in identifying changes from the previous edition.

This edition of NFPA 266 was approved as an American National Standard on March 31, 1998.

Origin and Development of NFPA 266

NFPA 266 was created as a new standard in 1994 to represent the current testing procedures for fire characteristics of upholstered furniture exposed to a flaming ignition source. This procedure was developed in response to the need to investigate the fire performance of upholstered furniture when exposed to a flaming ignition source. The performance data, heat release measurements, smoke density measurements, weight loss, and generation of carbon monoxide have been found to be useful in assessing the fire hazard of upholstered furniture. This standard was originally developed by research conducted by the National Institute of Standards and Technology (NIST) using a furniture calorimeter, Underwriters Laboratories Inc. (UL), and the California Bureau of Home Furnishings and Thermal Insulation (BHFTI).

This 1998 edition contains only minor changes, which are incorporated with some editorial clarifications. A new appendix item, A-2-1.2, was added to assist the document user by highlighting that fabric styles can have an effect on the peak heat release rates.

Copyright National Fire Protection Association
Provided by IHS under license with NFPA
No reproduction or networking permitted without license from IHS
Not for Resale

Technical Committee on Fire Tests

Jesse J. Beitel, *Chair*
Hughes Assoc. Inc., MD [SE]

April L. Berkol, ITT Sheraton Corp., NY [U]
Rep. American Hotel & Motel Assn.

John A. Blair, The DuPont Co., DE [M]
Rep. Society of the Plastics Industry Inc.

William P. Chien, State of New York Dept. of Fire Prevention & Control, NY [E]

William E. Fitch, Omega Point Laboratories Inc., TX [RT]

Sam W. Francis, American Forest & Paper Assn., PA [M]

Thomas W. Fritz, Armstrong World Industries Inc., PA [M]

James R. Griffith, Southwest Research Inst., TX [RT]

Marcelo M. Hirschler, GBH Int'l, CA [SE]

Alfred J. Hogan, Reedy Creek Improvement District, FL [E]
Rep. Fire Marshals Assn. of North America

Karl D. Houser, Gypsum Assn., DC [M]

William E. Koffel, Koffel Assoc. Inc., MD [SE]

James R. Lawson, U.S. Nat'l Inst. of Standards and Technology, MD [RT]

Gerald E. Lingenfelter, American Ins. Services Group Inc., NY [I]

William S. Metes, Underwriters Laboratories Inc., IL [RT]

George E. Meyer, Warnock Hersey, Inc., CA [RT]

John W. Michener, Milliken Research Corp., SC [M]
Rep. American Textile Mfrs. Inst. Inc.

James A. Milke, University of Maryland, MD [SE]

James C. Norris, Union Carbide Corp., TN [M]

John Roberts, Underwriters Laboratories of Canada, ON, Canada [RT]

T. Hugh Talley, Hugh Talley Co., TN [M]
Rep. Upholstered Furniture Action Council

David K. Tanaka, Factory Mutual Research Corp., MA [I]

Richard P. Thornberry, The Code Consortium, Inc., CA [SE]

Robert J. Wills, American Iron & Steel Inst., AL [M]

Peter J. Gore Willse, Industrial Risk Insurers, CT [I]
Rep. Industrial Risk Insurers

Alternates

Delbert F. Boring, Jr., American Iron & Steel Inst., OH [M]
(Alt. to R. J. Wills)

Tony Crimi, Underwriters Laboratories of Canada, ON, Canada [RT]
(Alt. to J. Roberts)

Philip J. DiNenno, Hughes Assoc. Inc., MD [SE]
(Alt. to J. J. Beitel)

Richard G. Gann, U.S. Nat'l Inst. of Standards and Technology, MD [RT]
(Alt. to J. R. Lawson)

Richard D. Gottwald, Society of the Plastics Industry Inc., DC [M]
(Alt. to J. A. Blair)

Marc L. Janssens, Southwest Research Inst., TX [RT]
(Alt. to J. R. Griffith)

Gene V. Paolucci, Yasuda Fire & Marine Insurance Co. of America, NY [I]
(Alt. to G. E. Lingenfelter)

William A. Thornberg, Industrial Risk Insurers, CT [I]
(Alt. to P. J. G. Willse)

James J. Urban, Underwriters Laboratories Inc., IL [RT]
(Alt. to W. S. Metes)

Kay M. Villa, American Textile Mfrs. Inst. Inc., DC [M]
(Alt. to J. W. Michener)

Joe Ziolkowski, American Furniture Mfrs Assoc., NC [M]
(Alt. to T. H. Talley)

Nonvoting

Robert H. Barker, American Fiber Mfrs. Assn., DC [M]
(Alt. to T. L. Jilg)

James F. Hoebel, U. S. Consumer Product Safety Commission, MD

Tod L. Jilg, Hoechst Celanese Corp., NC [M]
Rep. to American Fiber Mfrs. Assn.

Herman H. Spaeth, Novato, CA
(Member Emeritus)

Walter P. Sterling, NFPA Staff Liaison

This list represents the membership at the time the Committee was balloted on the text of this edition. Since that time, changes in membership may have occurred. A key to classifications is found at the back of this document.

NOTE: Membership on a committee shall not in and of itself constitute an endorsement of the Association or any document developed by the committee on which the member serves.

Committee Scope: This Committee shall have primary responsibility for documents on fire testing procedures for reviewing existing fire test standards and recommending appropriate action to NFPA; for recommending the application of and advising on the interpretation of acceptable test standards for fire problems of concern to NFPA technical committees and members; and for acting in a liaison capacity between NFPA and the committees of other organizations writing fire test standards. This Committee does not cover fire tests that are used to evaluate extinguishing agents, devices, or systems.

Copyright National Fire Protection Association
Provided by IHS under license with NFPA
No reproduction or networking permitted without license from IHS
Not for Resale

Contents

Chapter 1 General **266–** 4
1-1 Scope **266–** 4
1-2 Significance and Use **266–** 4
1-3 Summary of Test Method **266–** 4
1-4 Definitions **266–** 4
1-5 Units **266–** 4

Chapter 2 Test Specimens **266–** 4
2-1 Size and Preparation **266–** 4
2-2 Conditioning **266–** 5

Chapter 3 Test Equipment and Instrumentation **266–** 5
3-1 Ignition Source **266–** 5
3-2 Collection — Exhaust System **266–** 5
3-3 Velocity Measuring Instruments **266–** 6
3-4 Gas Sampling and Analysis Equipment **266–** 7
3-5 Smoke Density Measuring Instruments **266–** 7
3-6 Weighing Platform **266–** 8
3-7 Data Acquisition **266–** 8
3-8 Photographic and Video Equipment **266–** 8

Chapter 4 Calibration **266–** 8
4-1 Calibration of Equipment **266–** 8
4-2 Daily Calibration **266–** 8

Chapter 5 Test Procedure **266–** 9
5-1 Testing Procedure **266–** 9

Chapter 6 Calculations **266–** 9
6-1 Method of Calculation **266–** 9
6-2 Symbols **266–** 9
6-3 Calibration Constant Using Propane **266–**10
6-4 Heat Release for Test Specimens **266–**10
6-5 Smoke Obscuration **266–**10

Chapter 7 Report of Results **266–**10
7-1 Documentation **266–**10

Appendix A Explanatory Material **266–**10

Appendix B Commentary **266–**11

Appendix C Heat Release Calculations Using Additional Gas Analysis **266–**12

Appendix D Referenced Publications **266–**13

Index **266–**15

Copyright National Fire Protection Association
Provided by IHS under license with NFPA
No reproduction or networking permitted without license from IHS
Not for Resale

NFPA 266

Standard Method of Test for

Fire Characteristics of Upholstered Furniture Exposed to Flaming Ignition Source

1998 Edition

NOTICE: An asterisk (*) following the number or letter designating a paragraph indicates that explanatory material on the paragraph can be found in Appendix A.

Information on referenced publications can be found in Appendix D.

Chapter 1 General

1-1 Scope.

1-1.1 This test method, using a full-scale furniture calorimeter, shall be used to determine heat release, smoke density, weight loss, and generation of carbon monoxide of upholstered furniture or full-scale mock-up of furniture.

1-1.2 This test procedure shall be used to determine performance of upholstered furniture exposed to a flaming ignition source. This performance data has been found to be useful in assessing the fire hazard of upholstered furniture in occupancies that are identified as or considered to be public occupancies. Such occupancies include jails, prisons, nursing care homes, health care facilities, public auditoriums, and the public gathering areas of hotels and motels.

1-1.3 Heat release rate is indicated by measurement of oxygen depletion, and smoke generation is determined by smoke density measurement systems. Weight loss and carbon monoxide (CO) and carbon dioxide (CO_2) evolution are continuously recorded.

1-1.4* While this test method utilizes a full-scale furniture calorimeter, research has shown that both ASTM E 1537, *Standard Method for Fire Testing of Real Scale Upholstered Furniture Items,* and California Technical Bulletin 133, *Flammability Test Procedure for Seating Furniture for Use in Public Occupancies,* provide comparable results for test specimens having heat release rates of 600 kW or less.

1-1.5 With respect to measurement of smoke and CO production, a quantitative relationship has not been established between measurements taken in the duct of the calorimeter exhaust system and measurements taken within the room. Accordingly, results of measurements of CO and smoke taken at different locations in different test environments shall not be considered equivalent.

1-2 Significance and Use.

1-2.1 This test method shall be used to determine the resulting fire performance characteristics of upholstered furniture or full-scale mock-ups when exposed to a standard flaming ignition source.

1-2.2 The results from this procedure provide information that shall be permitted to be used as an aid in the selection of upholstered furniture items that provide less contribution of heat, flame, smoke, and gases to fire scenarios.

1-2.3 Heat and smoke release rate measurements are sources of useful information for product development. They provide a quantitative measure of specific changes in fire performance caused by product modifications.

1-2.4* For upholstered furniture products containing only wood or a metal frame, or a combination of both, the procedure using a mock-up sample provides an indication of the open-flame performance of the finished article. For upholstered furniture products containing plastic frames and plastic decorative parts or special construction features, a mock-up sample is not always an accurate indicator of the open-flame performance of the finished article.

1-3 Summary of Test Method.

1-3.1 This procedure shall provide for exposure of full-size upholstered furniture specimens or furniture mock-ups to a standard flaming ignition source in a full-scale furniture calorimeter.

1-3.2 The standard ignition source shall be a gas burner.

1-3.3 Determinations shall be made and recorded for parameters that include density of smoke, concentrations of carbon monoxide and carbon dioxide, weight loss, heat release rate, and total heat release.

1-4 Definitions.

Shall. Indicates a mandatory requirement.

Should. Indicates a recommendation or that which is advised but not required.

Standard. A document, the main text of which contains only mandatory provisions using the word "shall" to indicate requirements and which is in a form generally suitable for mandatory reference by another standard or code or for adoption into law. Nonmandatory provisions shall be located in an appendix, footnote, or fine-print note and are not to be considered a part of the requirements of a standard.

1-5 Units.

1-5.1 Metric units of measurement in this standard are in accordance with the modernized metric system known as the International System of Units (SI).

1-5.2 If a value for measurement as given in this standard is followed by an equivalent value in other units, the first stated shall be regarded as the requirement. A given equivalent value shall be considered as approximate.

Chapter 2 Test Specimens

2-1 Size and Preparation.

2-1.1* The test specimen shall consist of the actual upholstered furniture item or a full-scale mock-up of the furniture.

2-1.2* The construction of any full-scale mock-up upholstered furniture shall simulate the actual construction of the upholstered item.

2-1.3 The test specimen for a full-scale mock-up shall consist of component cushions that duplicate the thickness, construction, and design features of the product.

2-1.4 In the case of mock-up testing, a metal test frame *[see Figure 2-1.4(a) and Figure 2-1.4(b)]* shall be used to support the seat and back cushions and, if necessary, arm cushions. The chair frame shall be constructed of slotted L-angle iron and slotted flat-angle iron. The back shall be constructed so that it is adjustable to a maximum angle of 135 degrees ± 2 degrees

Copyright National Fire Protection Association
Provided by IHS under license with NFPA
No reproduction or networking permitted without license from IHS
Not for Resale

from the horizontal plane. The test frame shall be adjustable to accommodate test cushions of various thicknesses and sizes, with or without arm cushions.

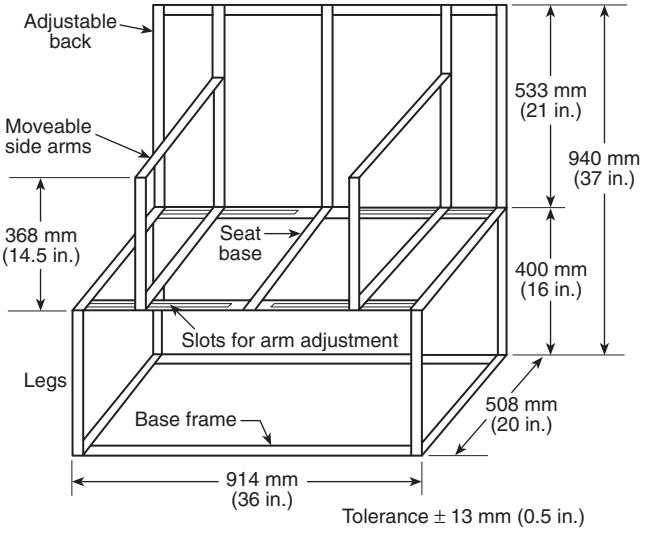

Figure 2-1.4(a) Metal test frame.

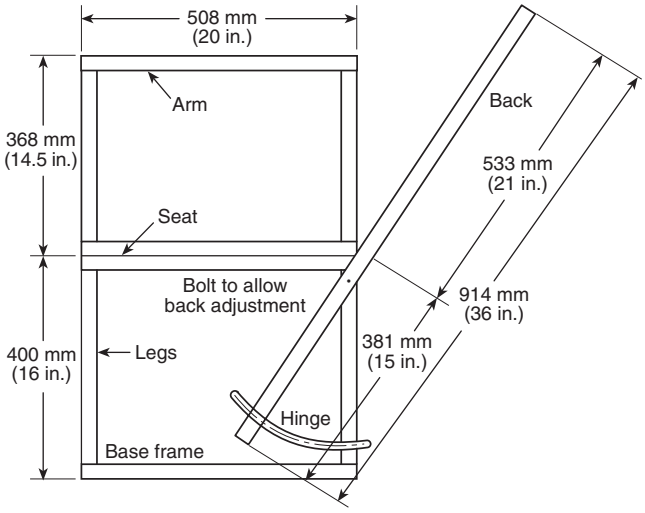

Figure 2-1.4(b) Metal test frame (end view).

2-1.5 Component back, seat, and arm cushions shall be constructed into mock-up designs of the actual article of furniture. Construction shall duplicate all layers found in the actual article of furniture. Cushion construction shall consist of either a manufacturer's prefabricated cushion of the appropriate size or custom-made cushions. Custom-made cushions shall be constructed by covering all six faces of the filling material with the appropriate interliners and cover fabric.

2-1.6 In the case of mock-up testing, the constructed seat cushion shall be placed horizontally on the seat area of the test frame and pushed against the back of the frame. The constructed back cushion shall then be placed vertically against the back support of the test frame. The back cushion shall be held in place by wire to prevent it from falling forward.

2-1.7 If arm cushions are used, the constructed arm cushions shall be placed between the seat cushion and the arm supports of the test frame. However, the placement of the seat, back, and arm cushions shall simulate the design features of the completed article of furniture.

2-2 Conditioning. The test specimen shall be conditioned for at least 48 hours prior to testing at 23°C ± 3°C (73°F ± 5°F) and a relative humidity of 50 percent ± 5 percent. Test specimens shall be tested within 10 minutes of removal from such conditions if the test conditions differ from those specified in this section.

Chapter 3 Test Equipment and Instrumentation

3-1 Ignition Source.

3-1.1 A 250 mm ± 10 mm × 250 mm ± 10 mm (10 in. ± 0.39 in. ×10 in. ± 0.39 in.) burner shall be used as the ignition source in this test method. The burner shall be constructed of 13 mm ± 1 mm (0.5 in. ± 0.039 in.) outside diameter stainless steel tubing with 0.89 mm ± 0.05 mm (0.034 in. ± 0.002 in.) wall thickness *[see Figure 3-1.1(a)]*. The front side shall have 14 holes pointing straight out and spaced 13 mm ± 1 mm (0.5 in. ± 0.039 in.) apart. The right and left sides shall have 6 holes pointing straight out and spaced 13 mm ± 1 mm (0.5 in. ± 0.039 in.) apart, and 4 holes pointing inward at an angle of 45 degrees ± 2 degrees and spaced 50 mm ± 2 mm (2 in. ± 0.076 in.) apart. All holes shall be 1 mm ± 0.1 mm (0.039 in. ± 0.0039 in.) in diameter *[see Figure 3-1.1(b)]*. The 1.07 m ± 0.2 m (42 in. ± 7.9 in.) straight arm of the burner shall be welded onto the rear of the front side *[see Figure 3-1.1(c)]* at a 30 degree angle. The burner shall be mounted on an adjustable height pole and shall be balanced by a counterweight or other appropriate mechanism. *[See Figure 3-1.1(d).]*

3-1.2 The gas burner shall utilize commercial-grade propane gas as fuel.

3-2 Collection — Exhaust System.

3-2.1 The hood shall be installed centrally above the weight-measuring system and test specimen. The face dimensions of the hood shall be 2.6 m ± 0.1 m × 2.6 m ± 0.1 m (8.53 ft ± 0.32 ft × 8.53 ft ± 0.32 ft), and the depth shall be 1.1 m ± 0.1 m (3.6 ft ± 0.32 ft). The hood shall exhaust into a plenum having a 0.9 m ± 0.05 m × 0.9 m ± 0.05 m (2.9 ft ± 0.16 ft × 2.9 ft ± 0.16 ft) cross section *(see Figure 3-2.1)*. Other hood sizes shall be permitted, provided they produce equivalent test results. The distance between the lower edge of the hood and the weight-measuring system shall be 2.4 m (7.87 ft).

3-2.2* The exhaust duct connected to the plenum shall be a minimum of 406 mm (15.8 in.) in diameter and shall have a minimum circular aperture of 305 mm (11.9 in.) at its entrance.

3-2.3 The exhaust system shall have sufficient exhaust capacity to collect all products of combustion developed by the burning specimen. The exhaust hood system shall be capable of being operated within a range that varies from a minimum rate of 0.47 m^3/sec (16.6 ft^3/sec) to a maximum rate of at least 2.4 m^3/sec (84.8 ft^3/sec).

3-2.4 An alternate exhaust system design shall be permitted to be used if it has been shown to produce equivalent results.

Copyright National Fire Protection Association
Provided by IHS under license with NFPA
No reproduction or networking permitted without license from IHS
Not for Resale

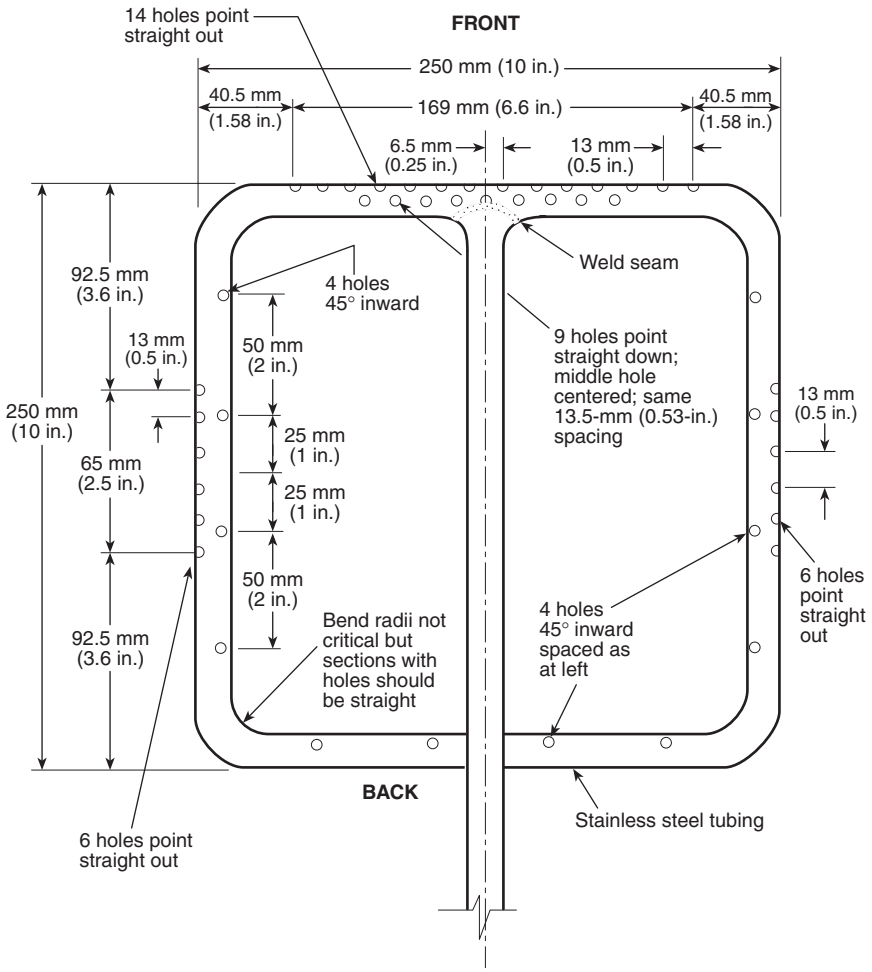

Note: 1. All tubing 12.7 mm (½ in.) OD, SS, 0.9 mm (0.035 in.) wall thickness.
2. All holes 1 mm (0.04 in.) in diameter.

Figure 3-1.1(a) Plan view of square gas burner.

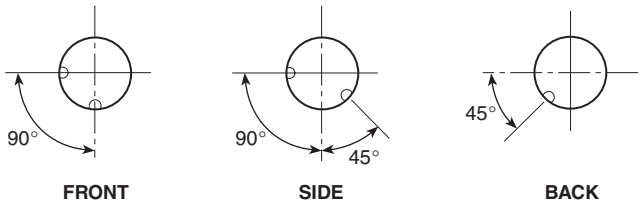

Figure 3-1.1(b) Cross-sectional view of each side of square gas burner.

3-3 Velocity Measuring Instruments.

3-3.1 The velocity in the exhaust duct shall be determined by measuring the differential pressure in the flow path using a bidirectional probe, as shown in Figure 3-3.1, connected to an electronic pressure gauge or an equivalent measuring system. The probe shall consist of a stainless steel cylinder with a solid diaphragm in the center that divides it into two chambers. The probe shall measure 44 mm (1.7 in.) long and have an inside diameter of 22 mm (0.86 in.). The pressure taps on either side of the diaphragm shall support the probe.

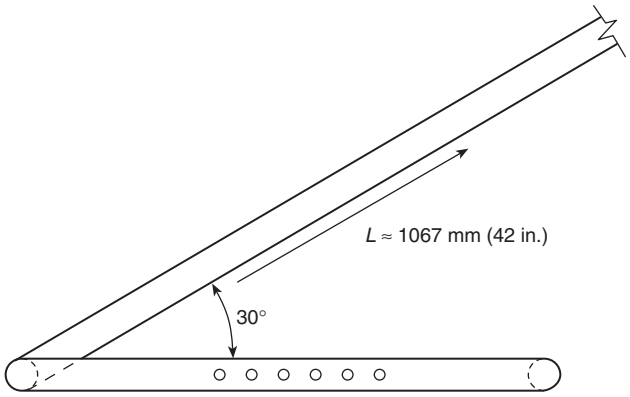

Figure 3-1.1(c) Side view of square gas burner.

Copyright National Fire Protection Association
Provided by IHS under license with NFPA
No reproduction or networking permitted without license from IHS
Not for Resale

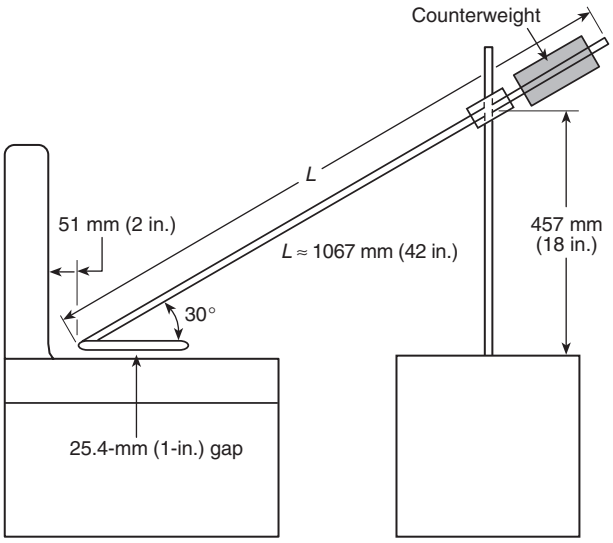

Figure 3-1.1(d) Positioning of square gas burner on the chair.

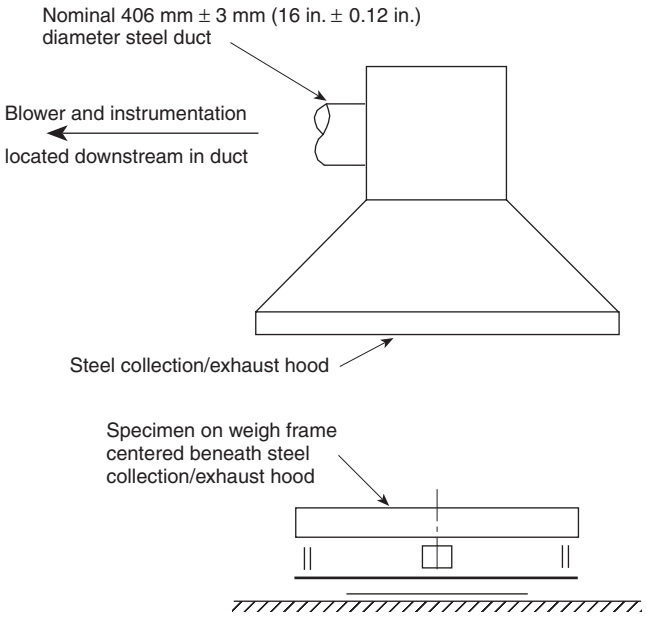

Figure 3-2.1 Collection hood and exhaust duct.

3-3.2 The axis of the probe shall be located at the centerline of the duct a minimum of 10 diameters downstream from the last turn in the duct. The taps shall be connected to a pressure transducer with a minimum resolution of 0.25 Pa (0.001 in. of water).

3-3.3 The temperature of the exhaust gas shall be measured upstream 152 mm ± 15 mm (5.9 in. ± 0.6 in.) from the probe at the centerline of the duct with a No. 28 AWG (0.08 mm^2), Type K thermocouple with an inconel sheath having a 16-mm (0.62-in.) outside diameter and a thickness of 3 mm (0.12 in.).

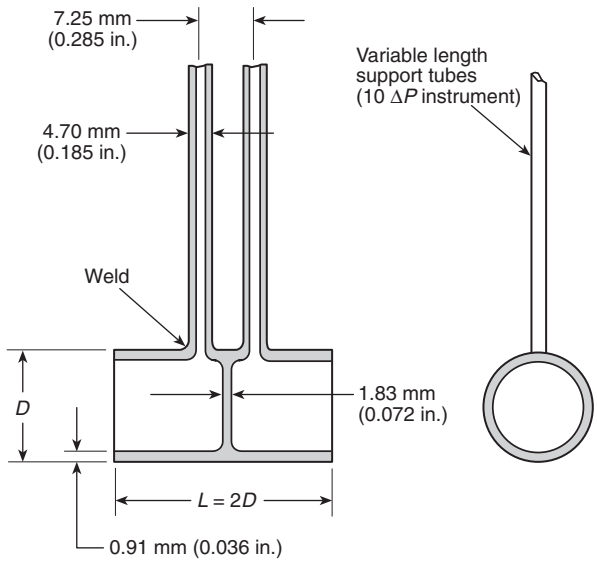

Figure 3-3.1 Bidirectional probe.

3-4 Gas Sampling and Analysis Equipment.

3-4.1* A stainless steel gas sampling tube shall be located at least 10 diameters downstream from the last turn in the duct to obtain a continuously flowing sample for determining the oxygen concentration of the exhaust gas as a function of time. A suitable filter and cold trap shall be placed in line ahead of the analyzer to remove particulates and water. The oxygen analyzer shall be of the paramagnetic type and shall be capable of measuring the oxygen concentration in a range of from 0 percent to 21 percent with an accuracy of ±0.2 percent of full-scale setting. The signal from the oxygen analyzer shall attain 90 percent of the calibration value within 30 seconds after introducing a step change in composition of the gas stream flowing past the inlet to the sampling tube.

3-4.2* The gas sampling tube shall be located and defined as in 3-4.1. The carbon monoxide analyzer shall be capable of measuring the carbon monoxide in a range of from 0 percent to 1.0 percent with an accuracy of ±0.02 percent of full-scale setting. The signal from the analyzer shall attain 90 percent of the calibration value within 30 seconds after introducing a step change in composition of the gas stream flowing past the inlet to the sampling tube.

3-4.3* The gas sampling tube shall be as located and described in 3-4.1. The carbon dioxide analyzer shall be capable of measuring the carbon dioxide concentration in a range of from 0 percent to 10 percent with an accuracy of ±0.2 percent of full-scale setting. The signal from the analyzer shall attain 90 percent of the calibration value within 30 seconds after introducing a step change in composition of the gas stream flowing past the inlet to the sampling tube.

3-5 Smoke Density Measuring Instruments.

3-5.1 The smoke density measuring system shall be a white light system.

3-5.2 The lamp shall be of the incandescent filament type and shall operate at a color temperature of 2900 K ± 100 K. The lamp shall be supplied with stabilized direct current, stable within ±0.2 percent, including temperature and short-term and long-term stability.

Copyright National Fire Protection Association
Provided by IHS under license with NFPA
No reproduction or networking permitted without license from IHS
Not for Resale

3-5.3 The lens system shall be selected such that the lens shall have a diameter, *d*, chosen with regard to the focal length, *f*, so that $d/f \leq 0.04$.

3-5.4 The aperture shall be placed in the focus of the lens.

3-5.5 The detector shall have a spectrally distributed response according to the CIE photopic curve. The detector shall be linear within 5 percent over an output range of at least 3.5 decades. This linearity shall be checked periodically with calibrated optical filters and shall cover the entire range of the instrument.

3-5.6 The system shall be mounted on a horizontal section of duct at a point where it will be preceded by a straight run of duct [at least 12 diameters or 5.2 m (17 ft)] and with the light beam directed upward along the vertical axis of the duct. A photoelectric cell, whose output is directly proportional to the amount of light received, shall be mounted over the light source and connected to a recording device. The recording device shall have an accuracy within ±1 percent of full scale for indicating changes in the attenuation of incident light resulting from the passage of smoke, particulate, and other effluents. The distance between the light source lens and the photocell lens shall be 914 mm ± 102 mm (35.6 in. ± 3.9 in.). The cylindrical light beam shall pass through 76 mm ± 3 mm (2.9 in. ± 0.12 in.) diameter openings at the top and bottom of the duct, with the resultant light beam centered on the photocell.

3-5.7* An alternate smoke density measuring system shall be permitted to be used if it has been shown to produce equivalent results.

3-6 Weighing Platform.

3-6.1 Mass loss rate of the burning specimen shall be measured during the test by means of a weight-measuring device.

3-6.2 A weighing platform shall be used to support the test specimen during the test. A reinforced inorganic board having the dimensions 1.2 m ± 0.1 m × 2.4 m ± 0.1 m (3.9 ft ± 0.32 ft × 7.87 ft ± 0.32 ft) shall be located on top of the weighing platform. The weighing platform perimeter shall have a rim extending 0.1 m ± 10 mm (0.32 ft ± 0.38 ft) above the top surface of the inorganic board to prevent spillage of test material.

3-6.3 The weight-measuring device shall be capable of measuring a specimen mass up to at least 90 kg (198.5 lb) with an accuracy of at least ±150 g (±0.33 lb). It shall be installed in such a way that the heat from the burning specimen and any eccentricity of the load do not affect the accuracy. Care shall be taken to avoid range shifts during measurements. All parts of the weight-measuring device shall be located below the top level of the slab.

3-6.4 The weighing platform shall support the base of the furniture specimen at a height of 127 mm ± 76 mm (5 in. ± 3 in.) above the floor.

3-6.5 The weighing platform shall be located beneath the collection hood at its geometric center.

3-7 Data Acquisition. A digital data acquisition system shall be used to collect and record oxygen, carbon monoxide, and carbon dioxide analyzer measurements; pressure gauge measurements; temperatures; smoke measurements; and weight-measuring device measurements. The speed and capacity of the data system shall be sufficient to collect the data every 5 seconds.

3-8 Photographic and Video Equipment.

3-8.1 A camera and video equipment shall be used to record the test specimen performance throughout each test.

3-8.2 A pretest photographic record of the test specimen shall be made.

Chapter 4 Calibration

4-1 Calibration of Equipment.

4-1.1 The equipment and instrumentation shall be calibrated.

4-1.2 The heat release instrumentation shall be calibrated by burning propane. A gas burner shall be constructed with a 100 mm ± 6 mm (3.9 in. ± 0.23 in.) layer of Ottawa sand to provide the horizontal surface through which the gas is supplied. This type of burner is shown in Figure 4-1.2. The gas supply to the burner shall be of commercial grade propane and shall have a net heat of combustion of 46.4 MJ/kg ± 0.5 MJ/kg (20,000 Btu/lb ± 200 Btu/lb). The flow rate of propane shall be metered and kept constant throughout the calibration test. A heat release value of 160 kW shall be used for calibration. The test shall be conducted for a period of 10 minutes.

4-1.3 A calibration constant, *C*, shall be obtained as described in Chapter 6. A value for *C* differing more than 10 percent from the theoretical value shall not be permitted, and the equipment shall be checked. For the exhaust duct configuration described in Section 3-2 and the velocity probe described in Section 3-3, *C* shall have a theoretical value of 2.8.

4-2 Daily Calibration.

4-2.1 Prior to the start of each day of testing, the equipment calibrations described in 4-2.2 through 4-2.7 shall be performed.

4-2.2 The oxygen analyzer shall be zeroed and spanned. The analyzer shall be zeroed by introducing 100 percent nitrogen gas to the instrument at the same pressure and flow rate as set for the test specimen combustion gases. The analyzer shall be spanned by introducing ambient duct air via the sample probe and adjusting the span to 20.95 percent oxygen. The spanning and zeroing process shall continue until adjustment-free accuracy is obtained.

4-2.3 Following zeroing and spanning, linearity of the oxygen analyzer response curve shall be verified by introducing bottled gas of a known oxygen concentration to the analyzer. The delay time of the analyzer shall be checked by introducing ambient duct air to the analyzer and noting the time at which the analyzer readings reach 90 percent of the final reading.

4-2.4 The CO analyzer and CO_2 analyzer shall be zeroed and spanned in the same manner as the oxygen analyzer. The analyzer shall be zeroed by introducing 100 percent nitrogen gas to the instrument at the same pressure and flow rate as set for the test specimen combustion gases. The analyzer shall be spanned by feeding each analyzer with bottled gas containing the selected concentration of span gas and adjusting for the response range of each analyzer.

4-2.5 The delay time of each analyzer shall be determined. The delay time shall be measured by introducing either a calibration span gas (for CO and CO_2) or a zero gas (for O_2) at the sample line just outside the duct and noting the time at which the analyzer readings reach 90 percent of the final reading.

Copyright National Fire Protection Association
Provided by IHS under license with NFPA
No reproduction or networking permitted without license from IHS
Not for Resale

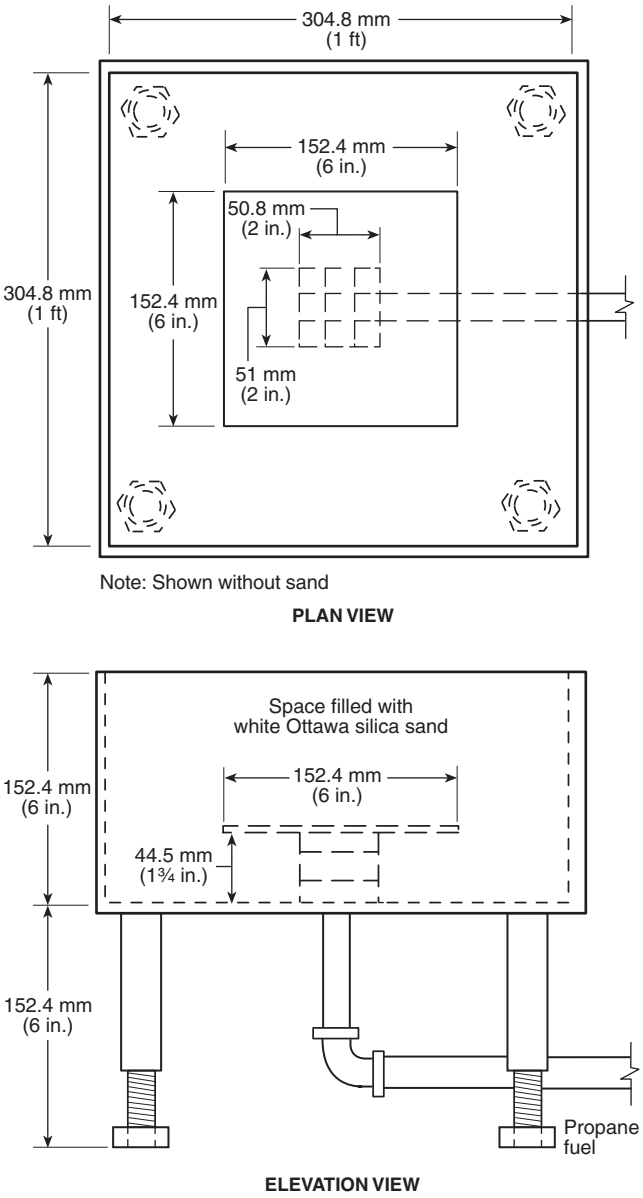

Figure 4-1.2 Calibration gas burner.

4-2.6 The weight-measuring device shall be calibrated with known weights suitable for the capacity of the equipment and the specimen being tested.

4-2.7 Linearity of the smoke density measuring system shall be verified by interrupting the light beam with multiple calibrated neutral density filters to cover the range of the recording instrument. Transmittance values measured by the photometer, using neutral density filters, shall be within ±3 percent of the calibrated value for each filter.

Chapter 5 Test Procedure

5-1 Testing Procedure.

5-1.1 The test specimen and weighing platform shall be located as shown in Figure 3-2.1.

5-1.2 The initial exhaust hood flow rate shall be set at a minimum of 0.47 m^3/sec (16.6 ft^3/sec).

5-1.3 The burner shall be positioned 51 mm ± 3 mm (2 in. ± 0.12 in.) from the back and 25 mm ± 3 mm (0.97 in. ± 0.12 in.) above the seat, with the center of the burner at the centerline of the test specimen.

5-1.4 The data acquisition shall begin in order to monitor test instrumentation.

5-1.5 The gas flow rate to the burner shall be set at a volume flow rate of 13 L/min ± 0.5 L/min (3.4 gal/min ± 0.13 gal/min). Care shall be taken to allow free flow of propane through the burner holes. Periodic cleaning of soot deposits and blowing of pressurized air through the tube shall be required.

5-1.6 The burner shall be ignited.

5-1.7 The exhaust hood flow rate shall be increased as required to collect all products of combustion from the test specimen.

5-1.8 The burner shall be removed from the test specimen after an exposure of 80 seconds ± 2 seconds.

5-1.9 The burner shall be turned off.

5-1.10 Combustion shall be allowed to continue until one or more of the following conditions are reached:

(a) All flaming combustion has ceased.

(b) Thirty minutes have elapsed from the time the burner was ignited.

Chapter 6 Calculations

6-1 Method of Calculation. The symbols used in this chapter shall be defined as in Section 6-2 and Appendix C. The equations in this chapter shall assume that only oxygen is measured. Appropriate equations that shall be used for those cases where additional gas analysis equipment (CO_2, CO, water vapor) is used are provided in Appendix C. If a CO_2 analyzer is used and CO_2 is not removed from the oxygen sampling lines, then the appropriate equations in Appendix C shall be used.

6-2 Symbols. The following symbols are used in this chapter:

C = calibration constant using propane ($m^{1/2}kg^{1/2}K^{1/2}$)

$\Delta H_c / r_o$ = net heat released per kg of O_2 consumed (kJ/kg), where ΔHc equals net heat of combustion (kJ/kg) and r_0 equals stoichiometric oxygen/fuel mass ratio

I = light intensity

I_0 = light intensity with no smoke

k = extinction coefficient (m^{-1})

L = path length (m)

ΔP = orifice meter pressure differential (Pa)

$\dot{q}''$ = heat release rate per unit area (kW/m^2)

t = time (sec)

t_d = oxygen analyzer delay time (sec)

Copyright National Fire Protection Association
Provided by IHS under license with NFPA
No reproduction or networking permitted without license from IHS
Not for Resale

T_e = absolute temperature of gas at the orifice meter (K)
X_{O_2} = oxygen analyzer reading, mole fraction O_2
$X^0_{O_2}$ = initial value of oxygen analyzer reading
$X^1_{O_2}$ = oxygen analyzer reading, before delay time correction

6-3 Calibration Constant Using Propane. The calibration constant shall be obtained from the following equation:

$$C = \left[\frac{160}{1.10(12.77 \times 10^3)}\right]\left(\sqrt{\frac{T_e}{\Delta P}}\right)\left(\frac{1084 - 1.4X_{O_2}}{X^0_{O_2} - X_{O_2}}\right)$$

In this equation, 160 corresponds to 160 kW propane supplied, 12.77×10^3 equals $\Delta H_c/r_o$ for propane, and 1.10 is the ratio of oxygen to air molecular weight.

6-4 Heat Release for Test Specimens.

6-4.1 Prior to performing additional calculations, the oxygen analyzer time shift shall be determined by the following equation:

$$X_{O_2}(t) = X^1_{O_2}\ (t - t_d)$$

6-4.2 The $X^1_{O_2}$ heat release rate then shall be determined by the following equation:

$$\dot{q}(t) = \left(\frac{\Delta H_c}{r_o}\right)1.10C\left(\sqrt{\frac{\Delta P}{T_e}}\right)\left[\frac{X^0_{O_2} - X_{O_2}(t)}{1.084 - 1.4X_{O_2}(t)}\right]$$

6-4.3 The value of $(\Delta H_c/r_o)$ for the test specimen shall be set to equal 13.1×10^3 kJ/kg unless a more accurate value is known for the test specimen.

6-4.4 The total heat released during the first 10 minutes of the test shall be determined by the following equation:

$$\dot{q}''i = \sum_{i=0}^{10} \dot{q}''i(t)\Delta t$$

6-5 Smoke Obscuration.

6-5.1 The extinction coefficient (k) of smoke shall be determined by the following equation:

$$k = \frac{1}{L}\ln\left(\frac{I_0}{I}\right)$$

6-5.2 The smoke release rate (*SRR*) shall be calculated using the optical density per linear path length and the volumetric flow rate in the duct. The *SRR* shall be determined by the following equation:

$$SRR = km$$

In this equation, *SRR* equals the smoke release rate in m^2/sec, k equals the extinction coefficient, and m equals the volumetric flow rate in m^3/sec referred to 298 K.

Chapter 7 Report of Results

7-1 Documentation. The following shall be reported for each test specimen:

(a) Test specimen identification or number
(b) Manufacturer or submitter
(c) Date of test
(d) Operator
(e) Composition or generic identification
(f) Details of preparation
(g) Number of replicate test specimens tested
(h) Time to termination of test (sec)
(i) Maximum mass loss (kg)
(j) Peak rate of heat release (kW)
(k) Time to peak rate of heat release (sec)
(l) Maximum smoke release rate (m^2/sec)
(m) Maximum carbon monoxide concentration (ppm)
(n) Maximum carbon dioxide concentration (ppm)
(o) Pretest photographic record of test specimen

Appendix A Explanatory Material

Appendix A is not a part of the requirements of this NFPA document but is included for informational purposes only. This appendix contains explanatory material, numbered to correspond with the applicable text paragraphs.

A-1-1.4 For further information on other test environments, see the following NIST publications:

"Furniture Flammability: An Investigation of the California Technical Bulletin 133 Test — Part 1: Measuring the Hazards of Furniture Fires," by J. Quintiere.

"Furniture Flammability: An Investigation of the California Technical Bulletin 133 Test — Part 2: Characterization of Ignition Source and Comparable Gas Burner," by T. J. Ohlemiller and K. Villa.

"Furniture Flammability: An Investigation of the California Technical Bulletin 133 Test — Part 3: Full-Scale Chair Burns," by W. J. Parker, et al.

A-1-2.4 While using frames or features other than wood or metal, actual articles of furniture (not mock-ups) should be tested.

A-2-1.1 When testing an actual piece of upholstered furniture, the presence of puckers and wrinkles, air voids between the outer fabric and inner construction, and gaps in sewn seams can affect the test results. The test data in Table A-2-1.1 give an indication of the effects that can be caused by puckers, wrinkles, and air voids between the outer fabric and inner construction:

- Chairs 1 and 2: No wrinkles, puckers, or air voids
- Chairs 3 and 4: 3 wrinkles approximately 100 mm (4 in.) long by 6 mm ($^1/_4$ in.) deep in seat; 1 wrinkle in each inside arm approximately 75 mm (3 in.) long by 6 mm ($^1/_4$ in.) deep
- Chairs 5 and 6: Loose cover fabric over the entire chair. Loose fabric is a fabric style used in upholstered furniture.

All six chairs were the same style, inner constructions, foams, and fabric. The cover fabric used in Chairs 5 and 6 was prewashed as is the industry custom with fabric styles of this type. The fabric in all cases was a 65 percent polyester and 35 percent cotton jacquard, not back-coated. All foams used passed the BS5852, part 2, crib 5 test.

Copyright National Fire Protection Association
Provided by IHS under license with NFPA
No reproduction or networking permitted without license from IHS
Not for Resale

Table A-2-1.1 Test Data*

Chair Number	Peak Heat Release Rate (kW)	Time to Peak Heat Release Rate (sec)
1	88	244
2	70	239
3	120	196
4	139	188
5	141	158
6	158	146

*The test data come from testing by the Hugh Talley Company, Inc., BS 5852, Fire Tests for Furniture, British Standards Institution, PO Box 4033, Linford Wood, Milton Keynes, MK14 6LE, United Kingdom.

A-2-1.2 When testing a full-scale mock-up, the presence of puckers, wrinkles, and air voids between the outer fabric and inner constructions and gaps in sewn seams can affect the test results, as described in A-2-1.1.

A-3-2.2 The locations for velocity, temperature, gas analysis, and smoke photometer should be chosen to ensure that the products of combustion are well-mixed and not stratified at the sampling location. The general rule should be for the duct to run a sufficient length (10 diameters) downstream from the last turn in the duct prior to location of instrumentation in order to provide for a fully developed gas flow. Mixing vanes should be used in the duct if concentration gradients are found to exist.

A-3-4.1 The following information is provided for informational purposes only and has not been independently verified, certified, or endorsed by the NFPA or any of its Technical Committees.

One type of oxygen analyzer is a Beckman Instrument Model 755 paramagnetic-type oxygen analyzer. Other equivalent oxygen analyzers may be permitted to be used.

A-3-4.2 The following information is provided for informational purposes only and has not been independently verified, certified, or endorsed by the NFPA or any of its Technical Committees.

One type of carbon monoxide analyzer is a Horiba Instrument Model PIR-2000 analyzer. Other equivalent carbon monoxide analyzers may be permitted to be used.

A-3-4.3 The following information is provided for informational purposes only and has not been independently verified, certified, or endorsed by the NFPA or any of its Technical Committees.

One type of carbon dioxide analyzer is a Horiba Instrument Model PIR-2000 analyzer. Other equivalent carbon dioxide analyzers may be permitted to be used.

A-3-5.7 A laser beam system may be permitted to be used as an alternate system for measuring smoke obscuration.

Appendix B Commentary

This appendix is not a part of the requirements of this NFPA document but is included for informational purposes only.

B-1 Investigation. This appendix was developed in response to the need to investigate the fire performance of upholstered furniture when exposed to open-flame ignition sources. The performance data have been found to be useful in assessing the fire hazard of upholstered furniture in occupancies that are identified as or considered to be public occupancies.

B-2 Statistics. In consideration of the statistics that document the involvement of upholstered furniture in fires in public occupancies and in response to the need expressed by fire departments, authorities having jurisdiction, procurement officials, and others, the California Bureau of Home Furnishings and Thermal Insulation (BHFTI) developed California Technical Bulletin (TB) 133, *Flammability Test Procedure for Seating Furniture for Use in Public Occupancies.*

B-3 Application. In the development of TB 133, the BHFTI considered the following as public occupancies:

(a) Jails, prisons, and penal institutions
(b) Health care facilities, such as hospitals
(c) Old-age and convalescent facilities
(d) Board and care occupancies
(e) Licensed child care facilities
(f) Public stadiums and auditoriums
(g) Public gathering areas of hotels and motels, defined as areas where there are 10 or more upholstered seats

B-4 California TB 133 Document. The TB 133 fire test was initially published in 1984 and consisted of an instrumented test room measuring 3.7 m × 3.0 m (12 ft × 10 ft) with a 2.4-m (8-ft) ceiling and a 0.96 m × 2 m (3 ft 2 in. × 6 ft 9 in.) doorway. The ignition source consisted of five double sheets of loosely crumpled newspaper placed inside a ventilated ignition box that was set on the seating surface of the furniture. The box was designed to contain the flames and direct them onto the sample surface. The sample furniture item weight was monitored by load cells. Test measurements in the TB 133 test included the following:

(a) Temperature increase at several points in the test room
(b) Smoke opacity at several elevations in the room
(c) A single point measurement of CO
(d) Weight loss of the furniture both during and following the test

B-5 Full Scale. In an actual full-scale fire, research has shown that one of the most significant characteristics of the items involved in a fire is their rate of heat release. The rate of heat release governs the rate of growth and spread of the fire to surrounding objects and the phenomenon of room flashover. In recognition of this fact, fire research of various types of upholstered furniture was conducted at the National Institute of Standards and Technology (NIST) using a full-scale calorimeter. Using this equipment, heat release measurements of furniture were obtained. At Underwriters Laboratories, a test method was developed (UL 1056, *Fire Tests of Upholstered Furniture*) utilizing the calorimeter approach to measurement. The method was intended to investigate the fire growth performance of upholstered furniture for use in public occupancies.

B-6 Study. In consideration of the advance of heat release technology, the BHFTI and NIST undertook a study to expand and modify TB 133 in three areas:

(a) Inclusion of heat measurements
(b) Development of a gas ignition source to substitute for a newspaper ignition source for increased repeatability and reproducibility

Copyright National Fire Protection Association
Provided by IHS under license with NFPA
No reproduction or networking permitted without license from IHS
Not for Resale

(c) Development of correlations between the BHFTI test room, the American Society for Testing and Materials (ASTM) Standard Fire Test Room, and the full-scale furniture calorimeter

B-7 Results. The results of the study were reported in three NIST reports. Based on the findings of the study, TB 133 was modified to include heat release measurement as an optional test procedure. The criteria of acceptance in the January 1991 TB 133 document are provided in B-7.1 and B-7.2.

B-7.1 Seating furniture meets the requirements of TB 133 if all of the following criteria are satisfied in a room fire test.

(a) A temperature increase less than 111°C (200°F) at ceiling thermocouple

(b) A temperature increase less than 28°C (50°F) at the mid-height thermocouple

(c) An opacity of smoke of 75 percent or less at the (1.2-m) 4-ft smoke density meter

(d) Carbon monoxide concentration of less than 100 ppm for 5 minutes

(e) Weight loss of the seating furniture due to combustion of 1.36 kg (3 lb) or less during the first 10 minutes of the test

B-7.2 Seating furniture meets the requirements of TB 133 if the following criteria are satisfied in a calorimeter using oxygen consumption calorimetry:

(a) Peak rate of heat release of 80 kW or less

(b) Total heat release of 25 MJ or less during the first 10 minutes of the test

(c) Weight loss of the seating furniture due to combustion of 1.36 kg (3 lb) or less during the first 10 minutes of the test

B-7.3 California TB 133 does not require that upholstered furniture be subjected to both of the test procedures (room test and calorimeter test). Upholstered furniture could be permitted to be tested by either procedure to fulfill the applicable criteria.

B-8 Contribution. Furniture that meets these criteria reduces the contribution of the furniture to the creation of untenable conditions in a room involved in fire.

B-9 Evaluation. The test method described in this standard provides data useful in evaluating upholstered furniture products in accordance with the January 1991 TB 133 criteria.

B-10 NFPA *101®, Life Safety Code®*, 6-6.3, requires that upholstered furniture have limited rates of heat release as follows:

(a) The peak rate of heat release shall not exceed 250 kW unless rooms have approved smoke detectors or approved automatic sprinkler systems.

(b) The peak rate of heat release shall not exceed 500 kW unless rooms have an approved, automatic sprinkler system.

(c) Total energy release during the first 5 minutes of the test shall not exceed 75 MJ unless rooms have an approved, automatic sprinkler system.

B-11 Testing. During the past several years, upholstered furniture for public occupancies has been investigated for response to open-flame sources using the TB 133 method and other similar methods such as UL 1056, *Fire Tests of Upholstered Furniture*, and ASTM E 1537, *Standard Method for Fire Testing of Real Scale Upholstered Furniture Items.*

Appendix C Heat Release Calculations Using Additional Gas Analysis

This appendix is not a part of the requirements of this NFPA document but is included for informational purposes only.

C-1 Calculation of Heat Release with Additional Gas Analysis.

C-1.1 The equations used to calculate heat release rate in Chapter 6 assume CO_2 is removed from the gas sample in a chemical scrubber before oxygen is measured. Some laboratories are equipped to measure CO_2; in such a case, it is not necessary to remove the CO_2 from the oxygen line. The advantage is that the chemical scrubbing agent, which is costly and needs careful handling, can be avoided.

C-1.2 In this appendix, equations are provided that are to be used when CO_2 is measured but *not* scrubbed out of the sampling lines. Two cases are considered. In the first case, part of the dried and filtered sample stream is diverted into infrared CO_2 and CO analyzers. In the second case, a water-vapor analyzer is also added. To avoid condensation, when measuring water-vapor concentration in the flow of combustion products, a separate sampling system with heated filters, heated sampling lines, and a heated analyzer is needed.

C-2 Symbols. The following symbols are used in this appendix:

$\Delta H_c / r_o$ = net heat released per kg of O_2 consumed kJ/kg, where ΔH_c equals net heat of combustion kJ/kg and r_O equals stoichiometric oxygen/fuel mass ratio

M_a = molecular weight of air (kg/kmol)

M_e = molecular weight of the combustion products (kg/kmol)

$\dot{m}_e$ = exhaust duct mass flow rate (kg/sec)

t_d^1 = delay time of the CO_2 analyzer(s)

t_d^2 = delay time of the CO analyzer(s)

t_d^3 = delay time of the water-vapor analyzer(s)

$X_{CO_2}^0$ = initial CO_2 reading, mole fraction

X_{CO}^0 = initial CO reading, mole fraction

$X_{H_2O}^0$ = initial water-vapor reading, mole fraction

$X_{O_2}^a$ = ambient oxygen mole fraction (mol/mol)

$X_{CO_2}^1$ = CO_2 reading before delay time correction, mole fraction

X_{CO}^1 = CO reading before delay time correction, mole fraction

$X_{H_2O}^1$ = water-vapor reading before delay time correction, mole fraction

X_{CO_2} = CO_2 reading after delay time correction, mole fraction

X_{CO} = CO reading after delay time correction, mole fraction

X_{H_2O} = water reading after delay time correction, mole fraction

ϕ = oxygen depletion factor

Copyright National Fire Protection Association
Provided by IHS under license with NFPA
No reproduction or networking permitted without license from IHS
Not for Resale

C-3 Where CO_2 and CO Are Measured.

C-3.1 As in the case of the oxygen analyzer, measurements of CO_2 and CO should be time-shifted to take transport time in the sampling lines into account as follows:

$$X_{O_2}(t) = X^1_{O_2}(t + t_d)$$
$$X_{CO_2}(t) = X^1_{CO_2}(t + t^1_d)$$
$$X_{CO}(t) = X^1_{CO}(t + t^2_d)$$

The delay times, t^1_d and t^2_d, for the CO_2 and CO analyzers, respectively, are usually different (smaller) than the delay time, t_d, for the oxygen (O_2) analyzer.

C-3.2 The exhaust duct flow is determined as follows:

$$\dot{m}_e = C\sqrt{\frac{\Delta P}{T_e}}$$

C-3.3 The rate of heat release now can be determined as follows:

$$\dot{q} = 1.10\left(\frac{\Delta H_c}{r_o}\right)X^a_{O_2}\left[\frac{\phi - 0.172(1-\phi)\dfrac{X_{CO}}{X_{O_2}}}{(1-\phi) + 1.084\phi}\right]\dot{m}_e$$

C-3.4 The oxygen depletion factor, ϕ, is calculated as follows:

$$\phi = \frac{X^0_{O_2}(1 - X_{CO_2} - X_{CO}) - X_{O_2}(1 - X^0_{CO_2})}{X^0_{O_2}(1 - X_{CO_2} - X_{CO} - X_{O_2})}$$

C-3.5 The ambient mole fraction of oxygen (O_2) is determined as follows:

$$X^a_{O_2} = (1 - X^0_{H_2O})(X^0_{O_2})$$

C-3.6 The second value in the numerator of the factor in brackets in the equation in C-3.3 is a correction factor for incomplete combustion of some carbon to CO instead of CO_2. In fact, the value for X_{CO} is usually very small, so that it can be disregarded in the equations in C-3.3 and C-3.4. The practical implication of this value is that a CO analyzer will generally not result in a noticeable increase in accuracy of heat release rate measurements. Consequently, the equations in C-3.3 and C-3.4 may be permitted to be used even if no CO analyzer is present by using the setting $X_{CO} = 0$.

C-4 Where Water Vapor Is also Measured.

C-4.1 In an open combustion system, such as that used in this test method, the flow rate of air entering the system cannot be measured directly but is inferred from the flow rate measured in the exhaust duct. An assumption regarding the expansion due to combustion of the fraction of the air that is fully depleted of its oxygen is necessary. This expansion depends on the composition of the fuel and the actual stoichiometry of the combustion. A suitable average value for the volumetric expansion factor is 1.084, which is the factor for propane.

C-4.2 This expansion factor value is already incorporated within the equation in 6-4.2 and the equation in C-3.3 for $\dot{q}$. It can be assumed that the exhaust gases consist primarily of nitrogen, oxygen, CO_2, water vapor, and CO; thus, measurements of these gases can be used to determine the actual expansion. (It is assumed that the measurements of oxygen, CO_2, and CO refer to a dry gas stream, while the water-vapor measurement corresponds to total stream flow.) The mass flow rate in the exhaust duct is then more accurately provided by the following equation:

$$\dot{m}_e = C\sqrt{\frac{\Delta P}{T_e}}\sqrt{\frac{M_e}{M_a}}$$

C-4.2.1 The molecular weight, M_e, of the exhaust gases is determined as follows:

$$M_e = [4.5 + (1 - X_{H_2O})(2.5 + X_{O_2} + 4X_{CO_2})]4$$

C-4.2.2 Using 28.97 as the value for M_a, the heat release rate is determined as follows:

$$\dot{q}(t) = 1.10\left(\frac{\Delta H_c}{r_o}\right)(1 - X_{H_2O})\left[\frac{X^0_{O_2}(1 - X_{O_2} - X_{CO_2})}{1 - X^0_{O_2} - X^0_{CO_2}} - X_{O_2}\right]\dot{m}_e$$

C-4.2.3 The following equation can be used to determine heat release rate when measuring O_2, CO_2, CO, and H_2O.

$$\dot{q}(t) = 1.10\left(\frac{\Delta H_c}{r_o}\right)(1 - X_{H_2O})\left[\phi - 0.172(1-\phi)\left(\frac{X_{CO}}{X_{O_2}}\right)\right] \times \left[\frac{(1 - X_{O_2} - X_{CO_2} - X_{CO})}{1 - X^0_{O_2} - X^0_{CO_2}}\right]\dot{m}_e X^0_{O_2}$$

C-4.3 The water-vapor readings used in the equation in C-4.2.2 are time- shifted in a similar way to those in the equations in C-3.1 for other types of analyzers as follows:

$$X^0_{H_2O}(t) = X^1_{H_2O}(t - t^3_d)$$

Appendix D Referenced Publications

D-1 The following documents or portions thereof are referenced within this standard for informational purposes only and are thus not considered part of the requirements of this standard. The edition indicated here for each reference is the current edition as of the date of the NFPA issuance of this standard.

D-1.1 NFPA Publication. National Fire Protection Association, 1 Batterymarch Park, P.O. Box 9101, Quincy, MA 02269-9101.

NFPA *101®,Life Safety Code®,* 1997 edition.

D-1.2 Other Publications.

D-1.2.1 ASTM Publication. American Society for Testing and Materials, 100 Barr Harbor Drive, West Conshohocken, PA 19428-2959.

ASTM E 1537*, Standard Method for Fire Testing of Real Scale Upholstered Furniture Items, 1996.*

D-1.2.2 NIST Publications. U.S. National Institute of Standards Technology, U.S. Department of Commerce, Technology Administration National Technical Information Service, Springfield, VA 22161.

NIST 4360, "Furniture Flammability: An Investigation of the California Technical Bulletin 133 Test — Part 1: Measuring the Hazards of Furniture Fires," J. Quintiere, July 1990.

Copyright National Fire Protection Association
Provided by IHS under license with NFPA
No reproduction or networking permitted without license from IHS
Not for Resale

NIST 4348, "Furniture Flammability: An Investigation of the California Technical Bulletin 133 Test — Part 2: Characterization of Ignition Source and Comparable Gas Burner," T. Ohlemiller and K. Villa, June 1990.

NIST 4375, "Furniture Flammability: An Investigation of the California Technical Bulletin 133 Test — Part 3: Full-Scale Chair Burns," W. J. Parker, K. M. Tu, S. Nurbakhsh, and G. H. Damant, July 1990.

D-1.2.3 State of California Publication. State of California, Department of Consumer Affairs, Bureau of Home Furnishings and Thermal Insulation.

California Technical Bulletin 133, *Flammability Test Procedure for Seating Furniture for Use in Public Occupancies,* January 1991.

D-1.2.4 UL Publication. Underwriters Laboratories Inc., 333 Pfingsten Road, Northbrook, IL 60062.

UL 1056, *Fire Tests of Upholstered Furniture,* 1995.

D-1.2.5 Additional Publications.

Babrauskas, Vytenis, Lawson, Randall J., Walton, W. D., and Twilley, W0illiam H., "Upholstered Furniture Heat Release Rates Measured with a Furniture Calorimeter," NMBSIR 82-2604, December 1982.

Damant, Gordon, "Flammability of Soft Furnishings. What's Happening in California?" *Journal of Fire Sciences,* Vol. 18, No. 5, September/October 1990, pp. 313–330.

Nurbakhsh, Said, "Development of Full-Scale Fire Test Facility," *Proceedings of the International Conference on Fire Safety,* Vol. 15, 1990.

Copyright National Fire Protection Association
Provided by IHS under license with NFPA
No reproduction or networking permitted without license from IHS
Not for Resale

Index

© 1998 National Fire Protection Association. All Rights Reserved.

The copyright in this index is separate and distinct from the copyright in the document which it indexes. The licensing provisions set forth for the document are not applicable to this index. This index may not be reproduced in whole or in part by any means without the express written permission of the National Fire Protection Association, Inc.

-B-

Bidirectional probe 3-3

-C-

Calculations . . . . . Chap. 6, App. C
Calibration . . . . . Chap. 4
Constant using propane 4-1.3, 6-3
Daily 4-2
Gas burner for 4-1.2
Heat release instrumentation . . . . . 4-1.2 to 4-1.3, 6-3
Calorimeter, full-scale furniture . . . . . 1-1.4 to 1-1.5, 1-3.1
Carbon dioxide C-1, C-3
Analyzer . . . . . 3-4.3, 3-7, 4-2.4 to 4-2.5, A-3-4.3
Data collection and records 1-1.3, 1-3.3, 3-7
Carbon monoxide C-3
Analyzer . . . . . 3-4.2, 3-7, 4-2.4 to 4-2.5, A-3-4.2
Data collection and records 1-1.3, 1-3.3, 3-7
Measurement of 1-1.1, 1-1.5
Collection—exhaust system 3-2, A-3-2.2
Test procedure 5-1.2, 5-1.7
Velocity measurement in 1-1.5, 3-3
Commentary on standard . . . . . App. B
Conditioning of specimen 2-2

-D-

Data acquisition, digital 3-7, 5-1.4
Definitions 1-4

-E-

Exhaust system . . . . . *See* Collection—exhaust system

-F-

Furniture calorimeter, full-scale . . . . . 1-1.4 to 1-1.5
Furniture mock-ups 1-1.1, 1-2.1, 1-3.1, 2-1, A-1-2.4, A-2-1.1, A-2-1.2

-G-

Gas burners, propane
Calibration 4-1.2
Ignition source, as . . . . . *see* Ignition source, Test
Gas sampling and analysis . . . . . App. C; *see also* Carbon dioxide; Carbon monoxide; Oxygen
Equipment 3-4, A-3-2.2

-H-

Heat release rate
Calculations . . . . . 6-4, App. C
Calibration of instrumentation for . . . . . 4-1.2 to 4-1.3, 6-3
Measurement of 1-1.1, 1-1.3, 1-2.3, 1-3.3, A-3-2.2
Hood, collection 3-2.1, 5-1.2, 5-1.7

-I-

Ignition sources
Public occupancies, furniture in B-1
Test . . . . . 1-2.1, 1-3.1 to 1-3.2, 3-1
Test procedure . . . . . 5-1.3, 5-1.5 to 5-1.6, 5-1.8 to 5-1.9
Instrumentation . . . . . *See* Test equipment and instrumentation

-M-

Measurement, units of 1-5
Metal test frame 2-1.4

-O-

Oxygen
Analyzer . . . . . 3-4.1, 3-7, 4-2.2 to 4-2.3, 6-4.1, A-3-4.1
Measurement of 1-1.3, 3-7

-P-

Photographic equipment 3-8
Photometer A-3-2.2
Propane gas burners . . . . . *See* Gas burners, propane

Copyright National Fire Protection Association
Provided by IHS under license with NFPA
No reproduction or networking permitted without license from IHS
Not for Resale

Public occupancies, upholstered furniture in . . . . . App. B

-R-

Referenced publications . . . . . Chap. 8, App. D
Report of results . . . . . Chap. 7

-S-

Scope of standard 1-1, A-1-1.4
Shall (definition) 1-4
Should (definition) 1-4
Significance of standard 1-2, A-1-2.4
Smoke density 1-1.1, 1-1.5, 1-3.3
Calculation of 6-5
Measuring systems 1-1.3, 3-5, 3-7, A-3-5.7
Calibration of 4-2.7
Smoke release rate 1-2.3, 6-5.2
Specimens . . . 1-2.1, 1-2.4, 1-3.1, Chap. 2, A-1-2.4; *see also* Furniture mock-ups
Collection of products from 3-2.3
Conditioning 2-2
Heat release for 6-4
Size and preparation 2-1, A-2-1.1, A-2-1.2
Test procedure 5-1.1
Standard (definition) 1-4
Symbols 6-2

-T-

Test equipment and instrumentation . . . . . Chap. 3
Collection—exhaust system . . . . *see* Collection—exhaust system
Data acquisition 3-7, 5-1.4
Gas sampling and analysis equipment 3-4, A-3-2.2
Ignition source . . . . . *see* Ignition source, Test
Photographic and video equipment 3-8
Smoke density measuring instruments . . . . . *see* Smoke density measuring systems
Velocity measuring instruments 3-3, A-3-2.2
Weighing platform . . . . . *see* Weight-measuring device platform
Test method
Other methods . . . . . 1-1.4, A-1-1.4, App. B
Scope 1-1
Significance 1-2
Summary 1-3
Use 1-2
Test procedure . . . . . Chap. 5
Test specimens . . . . . *See* Specimens
Thermocouples 3-3.3

-V-

Velocity measuring instruments 3-3, A-3-2.2
Video equipment 3-8

-W-

Water vapor C-4
Weight loss 1-1.1, 1-1.3, 1-3.3
Weight-measuring device/platform 3-6
Calibration of 4-2.6
Data collection and records 3-7
Test procedure 5-1.1

Copyright National Fire Protection Association
Provided by IHS under license with NFPA
No reproduction or networking permitted without license from IHS
Not for Resale