NFPA 265

Standard Methods of Fire Tests for Evaluating Room Fire Growth Contribution of Textile Coverings on Full Height Panels and Walls

2007 Edition

NFPA, 1 Batterymarch Park, Quincy, MA 02169-7471
An International Codes and Standards Organization

Copyright National Fire Protection Association
Provided by IHS under license with NFPA
No reproduction or networking permitted without license from IHS

Not for Resale

IMPORTANT NOTICES AND DISCLAIMERS CONCERNING NFPA DOCUMENTS

NOTICE AND DISCLAIMER OF LIABILITY CONCERNING THE USE OF NFPA DOCUMENTS

NFPA codes, standards, recommended practices, and guides, of which the document contained herein is one, are developed through a consensus standards development process approved by the American National Standards Institute. This process brings together volunteers representing varied viewpoints and interests to achieve consensus on fire and other safety issues. While the NFPA administers the process and establishes rules to promote fairness in the development of consensus, it does not independently test, evaluate, or verify the accuracy of any information or the soundness of any judgments contained in its codes and standards.

The NFPA disclaims liability for any personal injury, property or other damages of any nature whatsoever, whether special, indirect, consequential or compensatory, directly or indirectly resulting from the publication, use of, or reliance on this document. The NFPA also makes no guaranty or warranty as to the accuracy or completeness of any information published herein.

In issuing and making this document available, the NFPA is not undertaking to render professional or other services for or on behalf of any person or entity. Nor is the NFPA undertaking to perform any duty owed by any person or entity to someone else. Anyone using this document should rely on his or her own independent judgment or, as appropriate, seek the advice of a competent professional in determining the exercise of reasonable care in any given circumstances.

The NFPA has no power, nor does it undertake, to police or enforce compliance with the contents of this document. Nor does the NFPA list, certify, test or inspect products, designs, or installations for compliance with this document. Any certification or other statement of compliance with the requirements of this document shall not be attributable to the NFPA and is solely the responsibility of the certifier or maker of the statement.

--`,,```,,,,````-`-`,,`,,`,`,,`---

Copyright National Fire Protection Association
Provided by IHS under license with NFPA
No reproduction or networking permitted without license from IHS

Not for Resale

ADDITIONAL NOTICES AND DISCLAIMERS

Updating of NFPA Documents

Users of NFPA codes, standards, recommended practices, and guides should be aware that these documents may be superseded at any time by the issuance of new editions or may be amended from time to time through the issuance of Tentative Interim Amendments. An official NFPA document at any point in time consists of the current edition of the document together with any Tentative Interim Amendments and any Errata then in effect. In order to determine whether a given document is the current edition and whether it has been amended through the issuance of Tentative Interim Amendments or corrected through the issuance of Errata, consult appropriate NFPA publications such as the National Fire Codes® Subscription Service, visit the NFPA website at www.nfpa.org, or contact the NFPA at the address listed below.

Interpretations of NFPA Documents

A statement, written or oral, that is not processed in accordance with Section 6 of the Regulations Governing Committee Projects shall not be considered the official position of NFPA or any of its Committees and shall not be considered to be, nor be relied upon as, a Formal Interpretation.

Patents

The NFPA does not take any position with respect to the validity of any patent rights asserted in connection with any items which are mentioned in or are the subject of NFPA codes, standards, recommended practices, and guides, and the NFPA disclaims liability for the infringement of any patent resulting from the use of or reliance on these documents. Users of these documents are expressly advised that determination of the validity of any such patent rights, and the risk of infringement of such rights, is entirely their own responsibility.

NFPA adheres to applicable policies of the American National Standards Institute with respect to patents. For further information contact the NFPA at the address listed below.

Law and Regulations

Users of these documents should consult applicable federal, state, and local laws and regulations. NFPA does not, by the publication of its codes, standards, recommended practices, and guides, intend to urge action that is not in compliance with applicable laws, and these documents may not be construed as doing so.

Copyrights

This document is copyrighted by the NFPA. It is made available for a wide variety of both public and private uses. These include both use, by reference, in laws and regulations, and use in private self-regulation, standardization, and the promotion of safe practices and methods. By making this document available for use and adoption by public authorities and private users, the NFPA does not waive any rights in copyright to this document.

Use of NFPA documents for regulatory purposes should be accomplished through adoption by reference. The term "adoption by reference" means the citing of title, edition, and publishing information only. Any deletions, additions, and changes desired by the adopting authority should be noted separately in the adopting instrument. In order to assist NFPA in following the uses made of its documents, adopting authorities are requested to notify the NFPA (Attention: Secretary, Standards Council) in writing of such use. For technical assistance and questions concerning adoption of NFPA documents, contact NFPA at the address below.

For Further Information

All questions or other communications relating to NFPA codes, standards, recommended practices, and guides and all requests for information on NFPA procedures governing its codes and standards development process, including information on the procedures for requesting Formal Interpretations, for proposing Tentative Interim Amendments, and for proposing revisions to NFPA documents during regular revision cycles, should be sent to NFPA headquarters, addressed to the attention of the Secretary, Standards Council, NFPA, 1 Batterymarch Park, P.O. Box 9101, Quincy, MA 02269-9101.

For more information about NFPA, visit the NFPA website at www.nfpa.org.

Copyright National Fire Protection Association
Provided by IHS under license with NFPA
No reproduction or networking permitted without license from IHS
Not for Resale

Copyright © 2006 National Fire Protection Association. All Rights Reserved.

NFPA 265

Standard Methods of

Fire Tests for Evaluating Room Fire Growth Contribution of Textile Coverings on Full Height Panels and Walls

2007 Edition

This edition of NFPA 265, *Standard Methods of Fire Tests for Evaluating Room Fire Growth Contribution of Textile Coverings on Full Height Panels and Walls*, was prepared by the Technical Committee on Fire Tests. It was issued by the Standards Council on July 28, 2006, with an effective date of August 17, 2006, and supersedes all previous editions.

This edition of NFPA 265 was approved as an American National Standard on August 17, 2006.

Origin and Development of NFPA 265

The danger of using carpet-like textile coverings on walls and ceilings is well known, and these coverings have been recognized as a major contributing factor in many fires. Research conducted by the Fire Research Laboratory of the University of California at Berkeley and the American Textile Manufacturers Institute produced a report, "Room Fire Experience of Textile Wall Coverings," that indicated that consideration of only the flame spread rating as measured by NFPA 255, *Standard Method of Test of Surface Burning Characteristics of Building Materials*, might not reliably predict the fire behavior of textile wall coverings. Concerns were raised regarding the findings that low flame spread textile wall coverings, when placed in a room/corner test procedure, produced a large, rapidly growing fire.

The proposed standard was intended to fill a void and complement the series of interior finish fire tests that were being referenced in NFPA *101*®, *Life Safety Code*®, and other codes. The standard created a testing method that addressed the recognized hazards of using textile materials for wall coverings by supplying a means to evaluate the performance characteristics under specified fire exposure conditions and providing a valid repeatable and reproducible fire test method.

The 1998 edition was revised to recognize and incorporate into the standard the current practices being performed in testing laboratories, and requirement for the measurement of smoke obscuration was added. These changes were directly associated with the revisions to the 1997 edition of NFPA *101*, *Life Safety Code*, on interior finishes.

The 2002 edition was revised to comply with the *Manual of Style for NFPA Technical Committee Documents* regarding standardization of format.

The 2007 edition has been revised to include new requirements for visual documentation. Specific protocols and other related requirements have been added for video and photographic equipment. Revisions also have been made to the test procedure, and what was known as the Method A Test Protocol in previous editions has been moved to Annex C. Method A is a screening protocol and was deemed not to be equivalent to Method B, which tests three fully lined walls.

--`,,```,,,,````-`-`,,`,,`,`,,`---

Copyright National Fire Protection Association
Provided by IHS under license with NFPA
No reproduction or networking permitted without license from IHS

Not for Resale

Technical Committee on Fire Tests

William E. Fitch, *Chair*
Phyrefish Enterprises, Incorporated, FL [SE]

Barry L. Badders, Jr., Southwest Research Institute, TX [RT]
Jesse J. Beitel, Hughes Associates, Incorporated, MD [SE]
April L. Berkol, Starwood Hotels & Resorts Worldwide, Incorporated, NY [U]
Rep. American Hotel & Lodging Association
Robert G. Bill, Jr., FM Global, MA [I]
John A. Blair, The DuPont Company, DE [M]
Rep. Society of the Plastics Industry, Incorporated
Gordon H. Damant, Inter-City Testing & Consulting Corporation of California, CA [SE]
Thomas W. Fritz, Armstrong World Industries, Incorporated, PA [M]
Pravinray D. Gandhi, Underwriters Laboratories Incorporated, IL [RT]
Gordon E. Hartzell, Hartzell Consulting, Incorporated, TX [SE]
Marcelo M. Hirschler, GBH International, CA [SE]
Alfred J. Hogan, Reedy Creek Improvement District, FL [E]
Rep. International Fire Marshals Association
William E. Koffel, Koffel Associates, Incorporated, MD [SE]
James R. Lawson, U.S. National Institute of Standards and Technology, MD [RT]
Rodney A. McPhee, Canadian Wood Council, Canada [M]
Frederick W. Mowrer, University of Maryland, MD [SE]
David T. Sheppard, U.S. Department of Justice, MD [RT]
Kuma Sumathipala, American Forest & Paper Association, DC [M]
T. Hugh Talley, Hugh Talley Company, TN [M]
Rep. Upholstered Furniture Action Council
Rick Thornberry, The Code Consortium, Incorporated, CA [SE]
William A. Webb, Schirmer Engineering Corporation, IL [I]
Robert A. Wessel, Gypsum Association, DC [M]
Robert J. Wills, American Iron and Steel Institute, AL [M]

Alternates

Robert M. Berhinig, Underwriters Laboratories Incorporated, IL [RT]
(Alt. to P. D. Gandhi)
Delbert F. Boring, Jr., American Iron and Steel Institute, OH [M]
(Alt. to R. J. Wills)
Richard J. Davis, FM Global, MA [I]
(Alt. to R. G. Bill, Jr.)
Sam W. Francis, American Forest & Paper Association, PA [M]
(Alt. to K. Sumathipala)
Richard G. Gann, U.S. National Institute of Standards and Technology, MD [RT]
(Alt. to J. R. Lawson)
Paul A. Hough, Armstrong World Industries, Incorporated, PA [M]
(Alt. to T. W. Fritz)
Marc L. Janssens, Southwest Research Institute, TX [RT]
(Alt. to B. L. Badders, Jr.)
James K. Lathrop, Koffel Associates, Incorporated, CT [SE]
(Alt. to W. E. Koffel)
James A. Milke, University of Maryland, MD [SE]
(Alt. to F. W. Mowrer)
Arthur J. Parker, Hughes Associates, Incorporated, MD [SE]
(Alt. to J. J. Beitel)
Ineke Van Zeeland, Canadian Wood Council, Canada [M]
(Alt. to R. A. McPhee)
Joe Ziolkowski, American Furniture Manufacturers Association, NC [M]
(Alt. to T. H Talley)

Nonvoting

Robert H. Barker, American Fiber Manufacturers Association, VA [M]
Rep. American Fiber Manufacturers Association
Rohit Khanna, U.S. Consumer Product Safety Commission, MD [C]

Milosh T. Puchovsky, NFPA Staff Liaison

This list represents the membership at the time the Committee was balloted on the final text of this edition. Since that time, changes in the membership may have occurred. A key to classifications is found at the back of the document.

NOTE: Membership on a committee shall not in and of itself constitute an endorsement of the Association or any document developed by the committee on which the member serves.

Committee Scope: This Committee shall have primary responsibility for documents on fire testing procedures, for reviewing existing fire test standards and recommending appropriate action to NFPA, for recommending the application of and advising on the interpretation of acceptable test standards for fire problems of concern to NFPA technical committees and members, and for acting in a liaison capacity between NFPA and the committees of other organizations writing fire test standards. This Committee does not cover fire tests that are used to evaluate extinguishing agents, devices, or systems.

Copyright National Fire Protection Association
Provided by IHS under license with NFPA
No reproduction or networking permitted without license from IHS
Not for Resale

Contents

Chapter 1 Administration **265–** 4
1.1 Scope **265–** 4
1.2 Purpose **265–** 4
1.3 Application **265–** 4
1.4 Summary of Method **265–** 4

Chapter 2 Referenced Publications **265–** 5
2.1 General **265–** 5
2.2 NFPA Publications. (Reserved) **265–** 5
2.3 Other Publications **265–** 5
2.4 References for Extracts in Mandatory Sections. (Reserved) **265–** 5

Chapter 3 Definitions **265–** 5
3.1 General **265–** 5
3.2 NFPA Official Definitions **265–** 5
3.3 General Definitions **265–** 5

Chapter 4 Test Equipment **265–** 5
4.1 Ignition Source **265–** 5
4.2 Compartment Geometry and Construction **265–** 5

Chapter 5 Specimen Mounting and Installation ... **265–** 6
5.1 Specimen Mounting **265–** 6
5.2 Specimen Installation **265–** 6
5.3 Conditioning of Specimen **265–** 6

Chapter 6 Environmental Conditions **265–** 6
6.1 Fire Room Environment **265–** 6
6.2 Building Environment **265–** 6

Chapter 7 Instrumentation **265–** 7
7.1 Room Instrumentation **265–** 7
7.2 Canopy Hood and Exhaust Duct **265–** 8
7.3 Instrumentation in Exhaust Duct **265–** 8

Chapter 8 Calibration **265–**11
8.1 Calibration and Documentation of Ignition Source and Test Equipment **265–**11
8.2 Calibration **265–**12
8.3 Smoke Measurement Calibration **265–**12
8.4 Gas Analyzers Calibration **265–**12

Chapter 9 Test Procedure **265–**12
9.1 Method **265–**12
9.2 Procedure **265–**12

Chapter 10 Calculations **265–**12
10.1 Flow Rate Equations **265–**12
10.2 Smoke Measurement Equations **265–**13
10.3 Release Rate of Combustion Gases **265–**13
10.4 Symbols **265–**13

Chapter 11 Documentation **265–**14
11.1 Report **265–**14
11.2 Materials **265–**14
11.3 Burner Gas Flow **265–**14
11.4 Time History of the Total Heat Flux to Floor **265–**14
11.5 Time History of the Gas Temperature **265–**14
11.6 Time History of the Rate of Heat Release of the Fire **265–**14
11.7 Time History of the Fire Growth **265–**14
11.8 Time History of Smoke Obscuration **265–**14
11.9 Discussion of Performance **265–**14

Annex A Explanatory Material **265–**14

Annex B Acceptance Criteria **265–**16

Annex C Method A Test Protocol **265–**17

Annex D Informational References **265–**18

Index **265–**19

Copyright National Fire Protection Association
Provided by IHS under license with NFPA
No reproduction or networking permitted without license from IHS
Not for Resale

NFPA 265

Standard Methods of

Fire Tests for Evaluating Room Fire Growth Contribution of Textile Coverings on Full Height Panels and Walls

2007 Edition

IMPORTANT NOTE: This NFPA document is made available for use subject to important notices and legal disclaimers. These notices and disclaimers appear in all publications containing this document and may be found under the heading "Important Notices and Disclaimers Concerning NFPA Documents." They can also be obtained on request from NFPA or viewed at www.nfpa.org/disclaimers.

NOTICE: An asterisk (*) following the number or letter designating a paragraph indicates that explanatory material on the paragraph can be found in Annex A.

Changes other than editorial are indicated by a vertical rule beside the paragraph, table, or figure in which the change occurred. These rules are included as an aid to the user in identifying changes from the previous edition. Where one or more complete paragraphs have been deleted, the deletion is indicated by a bullet (•) between the paragraphs that remain.

Information on referenced publications can be found in Chapter 2 and Annex D.

Chapter 1 Administration

1.1 Scope.

1.1.1 This standard describes a test method for determining the contribution of textile wall coverings to room fire growth during specified fire exposure conditions.

1.1.2* This test method shall be used to evaluate the flammability characteristics of textile wall coverings where such materials constitute the exposed interior surfaces of buildings and demountable, relocatable, full-height partitions used in open building interiors.

1.1.3 This test method shall not be used to evaluate the fire endurance of assemblies, nor shall it be used to evaluate the effect of fires originating within a wall assembly.

1.1.4 The test method shall not be used for the evaluation of floor or ceiling finishes.

1.1.5* This test method shall not apply to fabric-covered, lower-than-ceiling-height, freestanding, prefabricated panel furniture systems.

1.2 Purpose.

1.2.1 This test method shall measure certain fire performance characteristics of textile wall covering materials in an enclosure under specified fire exposure conditions.

1.2.2 This test method shall determine the potential extent to which the textile wall covering materials contribute to fire growth in a room and the potential for fire spread beyond the room under the particular conditions simulated.

1.3 Application.

1.3.1 This test method shall provide all of the following:

(1) Extent of fire growth in the test room
(2) Rate of heat release by the specimen
(3) Total heat released by the specimen
(4) Time to flashover in the test room, if it occurs
(5) Time to flame extension beyond the doorway of the test room, if it occurs
(6) Total heat flux incident to the floor of the test room
(7) Upper level gas temperature in the test room
(8) Smoke obscuration, as determined in the exhaust duct
(9) Production of carbon monoxide, as determined in the exhaust duct
(10) Emissions of other combustion gases, as determined in the exhaust duct

1.3.2 This test method shall not provide data that can be generalized to apply to rooms or spaces of different shapes, sizes, and ventilation. However, this test method shall provide a general ranking of wall covering materials for use in making judgments, provided it is understood that the conditions observed in the test might or might not be repeated in actual exposures of the tested wall coverings to fire.

1.3.3 This test method shall not provide either of the following:

(1) The full information concerning toxicity of combustion gases
(2) Fire resistance of wall–ceiling systems

1.4* Summary of Method.

1.4.1 The sample shall be tested by using a corner test exposure with the specimens mounted on three fully lined walls of the test compartment (Method B).

1.4.1.1 These test methods shall use a gas burner to produce a diffusion flame to expose the walls in the corner of a room 2.4 m × 3.7 m × 2.4 m (8 ft × 12 ft × 8 ft).

1.4.1.2 The burner shall produce a prescribed rate of heat output of 40 kW for 5 minutes followed by 150 kW for 10 minutes, for a total exposure period of 15 minutes.

1.4.1.3 The contribution of the textile wall covering to fire growth shall be measured by constant monitoring of the incident heat flux on the center of the floor, the temperature of the gases in the upper part of the room, the rate of heat release, the smoke release, and the time to flashover.

1.4.1.4 The test shall be conducted while providing natural ventilation to the room, through a single doorway of 0.8 m × 2.0 m (30 in. × 80 in.).

1.4.1.5 The combustion products shall be collected in a hood feeding into a chamber that is connected to an exhaust duct in which measurements of the gas velocity, temperature, and concentrations of selected gases are made.

1.4.2 Flashover shall be considered to have occurred when any two of the following conditions have been attained:

(1) The heat release rate exceeds 1 MW.
(2) The heat flux at floor exceeds 20 kW/m^2.
(3) The average upper layer temperature exceeds 600°C (1112°F).
(4) Flames exit the doorway.
(5) Autoignition of paper target on floor occurs.

Copyright National Fire Protection Association
Provided by IHS under license with NFPA
No reproduction or networking permitted without license from IHS
Not for Resale

Chapter 2 Referenced Publications

2.1 General. The documents or portions thereof listed in this chapter are referenced within this standard and shall be considered part of the requirements of this document.

2.2 NFPA Publications. (Reserved)

2.3 Other Publications.

Merriam-Webster's Collegiate Dictionary, 11th edition, Merriam-Webster, Inc., Springfield, MA, 2003.

2.4 References for Extracts in Mandatory Sections. (Reserved)

Chapter 3 Definitions

3.1 General. The definitions contained in this chapter shall apply to the terms used in this standard. Where terms are not defined in this chapter or within another chapter, they shall be defined using their ordinarily accepted meanings within the context in which they are used. *Merriam-Webster's Collegiate Dictionary*, 11th edition, shall be the source for the ordinarily accepted meaning.

3.2 NFPA Official Definitions.

3.2.1 Shall. Indicates a mandatory requirement.

3.2.2 Should. Indicates a recommendation or that which is advised but not required.

3.2.3 Standard. A document, the main text of which contains only mandatory provisions using the word "shall" to indicate requirements and which is in a form generally suitable for mandatory reference by another standard or code or for adoption into law. Nonmandatory provisions shall be located in an appendix or annex, footnote, or fine-print note and are not to be considered a part of the requirements of a standard.

3.3 General Definitions.

3.3.1 Average Upper Gas Layer Temperature. Temperature based on the average of the four ceiling quadrant thermocouples and the center of the room ceiling thermocouple.

3.3.2* Textile. As used in this document, originally a woven fabric, now generally applied to (1) staple fibers and filaments suitable for conversion to or use as yarns or for the preparation of nonwoven fabrics, (2) yarns made from natural or manufactured fibers, and (3) fabrics made from fibers as defined in (1) and (2) and from yarns.

Chapter 4 Test Equipment

4.1 Ignition Source.

4.1.1 The ignition source for the test shall be a gas burner with a nominal 305 mm × 305 mm (12 in. × 12 in.) porous top surface of refractory material as shown in Figure 4.1.1.

4.1.2 The refractory material, through which the gas is supplied, shall be permitted to be either of the following:

(1) A 25.4 mm (1 in.) thick porous ceramic fiberboard over a 152 mm (6 in.) chamber
(2) A layer of white Ottawa silica sand not less than 102 mm (4 in.) for providing the horizontal surface through which the gas is supplied

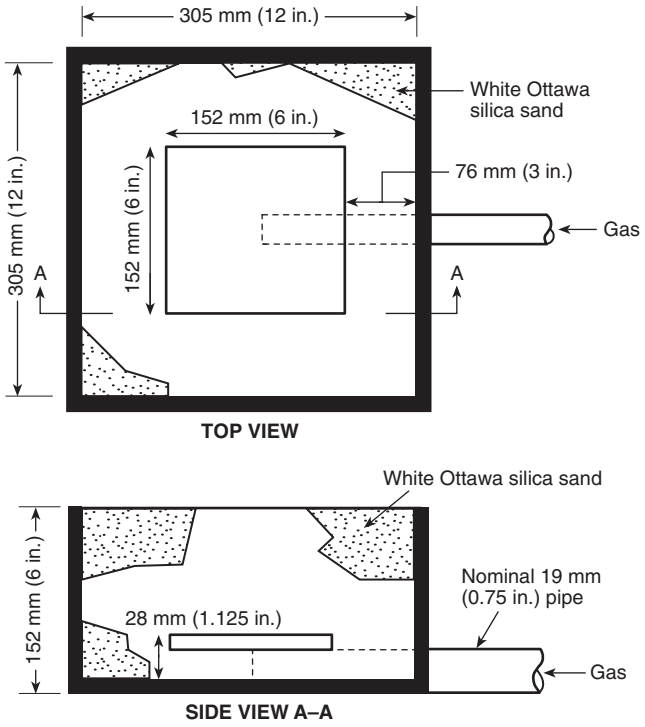

FIGURE 4.1.1 Gas Burner.

4.1.3 The top surface of the burner, through which the gas is applied, shall be located horizontally 305 mm (12 in.) above the floor.

4.1.4 The burner enclosure shall be located such that the edge of the diffusion surface is located 51 mm (2 in.) from both walls, in a corner of the room, opposite the door.

4.1.5 The gas supply to the burner shall be of C.P. grade propane (99 percent purity or better).

4.1.5.1 The burner shall be capable of producing a net heat output of 40 kW ± 1 kW for 5 minutes followed by a net heat output of 150 kW ± 5 kW for 10 minutes.

4.1.5.2* Flow rates shall be calculated using the net heat of combustion of propane or 85 MJ/m^3 (2280 Btu/ft^3) at standard conditions of 20°C (68°F) temperature and 100 kPa (14.70 psi) absolute pressure.

4.1.5.3 The gas flow rate shall be metered throughout the test with an accuracy of ±3 percent.

4.1.6* The heat output from the burner shall be controlled to ±5 percent.

4.1.7 The burner design shall allow switching from 40 kW to 150 kW within 10 seconds.

4.1.8 The burner shall be ignited by a pilot burner or a remotely controlled spark igniter.

4.1.9 Burner controls shall be provided for automatic gas supply shutoff if flameout occurs.

4.2 Compartment Geometry and Construction. Compartment geometry and construction shall be as shown in Figure 4.2.

Copyright National Fire Protection Association
Provided by IHS under license with NFPA
No reproduction or networking permitted without license from IHS
Not for Resale

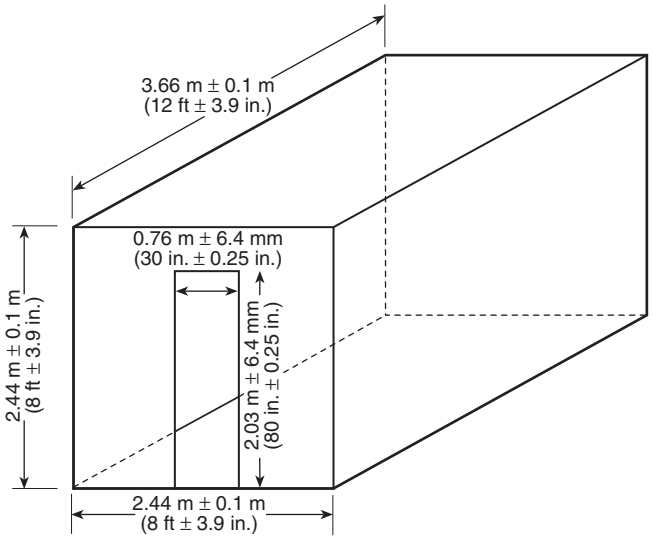

FIGURE 4.2 Interior Room Dimensions and Interior Doorway Dimensions.

4.2.1* The interior dimensions of the fire room floor, when the specimens are in place shall measure 2.44 m ± 0.1 m × 3.66 m ± 0.1 m (8 ft ± 3.9 in. × 12 ft ± 3.9 in.).

4.2.2 The finished ceiling shall be 2.44 m ± 0.1 m (8 ft ± 3.9 in.) above the floor.

4.2.3 There shall be four walls at right angles defining the compartment, as shown in Figure 4.2.

4.2.4* The room shall be placed indoors in an essentially draft-free, heated space large enough to ensure that there is no influence of the surroundings on the test fire.

4.2.5 There shall be a doorway measuring 0.76 m ± 6.4 mm × 2.03 m ± 6.4 mm (30 in. ± 0.25 in. × 80 in. ± 0.25 in.) in the center of one of the 2.44 m × 2.44 m (8 ft × 8 ft) walls, and no other wall, floor, or ceiling openings that allow ventilation.

4.2.6* The test compartment shall be a framed (with wood or metal studs) or a concrete block structure.

4.2.6.1 The inside surface of the walls, ceiling, and floor shall be of Type X gypsum wallboard or of calcium silicate board of 736 kg/m^3 (46 lb/ft^3) density.

4.2.6.2 The nominal thickness of the inside surface shall be at least 12 mm (0.5 in.).

4.2.6.3 For each test, when the test is for wall systems only, a new section of uncoated and unpainted nominal 16 mm (⅝ in.) gypsum wallboard, nominal 610 mm × 610 mm (2 ft × 2 ft), shall be installed in the ceiling at the wall corner intersection directly above the burner.

4.2.7 The door frame shall be constructed to remain unchanged during the test period to a tolerance of ±1 percent in height and width.

Chapter 5 Specimen Mounting and Installation

5.1 Specimen Mounting.

5.1.1 Test specimens shall be mounted on a substrate that is appropriate to the intended application.

5.1.2* Where a manufacturer specifies use of an adhesive, specimens shall be mounted in a manner that uses the adhesive and application rate specified by the manufacturer and that is comparable to actual field installations.

5.1.3 Where a specimen exhibits a distinct direction, the sample shall be mounted such that the machine direction is vertical, unless the manufacturer indicates that a different method of mounting is to be used in actual installations.

5.2 Specimen Installation. The specimen assembly shall be installed on the interior wall surfaces of the test room as described in 5.2.1.

5.2.1 Method B Test Protocol. For the Method B test protocol, specimen assemblies shall be installed to cover fully both 2.44 m × 3.66 m (8 ft × 12 ft) walls and the 2.44 m × 2.44 m (8 ft × 8 ft) wall not having the door.

5.3 Conditioning of Specimen.

5.3.1* Prior to testing, the mounted specimen shall be conditioned to equilibrium, as defined in 5.3.2, in an atmosphere at a temperature of 21°C ± 3°C (70°F ± 5°F) and a relative humidity of 50 percent ± 5 percent.

5.3.2 Equilibrium shall be considered to have been reached when a representative piece of the specimen has achieved constant mass, which is reached when two successive weighing operations, carried out at an interval of 24 hours, do not differ by more than 0.1 percent of the mass of the test piece, or 0.1 g (0.0035 oz), whichever is greater.

5.3.3 The specimens shall be tested as soon as possible after removal from such conditions, if test room conditions differ from those in 5.3.1 and 5.3.2.

5.3.4 The time between removal from conditioning room and start of testing shall be recorded as part of the test documentation.

Chapter 6 Environmental Conditions

6.1 Fire Room Environment.

6.1.1 The test building in which the fire room is located shall have vents for the discharge of combustion products and shall have provisions for fresh air intake, so that no oxygen-deficient air is introduced into the fire room during the test.

6.1.2 Prior to the start of the test, the ambient air at the mid-height entrance to the compartment shall have a velocity of less than 0.5 m/s (100 ft/min) in any direction, as measured at a horizontal distance of 0.91 m (3 ft) from the center of the doorway.

6.1.3 The following two ambient conditions shall be maintained:

(1) The ambient temperature in the fire room, measured by one of the thermocouples in 7.1.2, shall be in the range of 18°C to 24°C (64°F to 75°F).
(2) The ambient relative humidity in the fire room shall be 50 percent ± 5 percent.

6.2 Building Environment.

6.2.1 The building shall be sized so that there is no smoke accumulation in the building below the level of the top of the fire compartment.

Copyright National Fire Protection Association
Provided by IHS under license with NFPA
No reproduction or networking permitted without license from IHS
Not for Resale

6.2.2 The ambient temperature in the test building at locations around the fire compartment shall be above 4°C (40°F).

6.2.3 The relative humidity shall be less than 75 percent for the duration of the test.

Chapter 7 Instrumentation

7.1 Room Instrumentation. The instrumentation specified in 7.1.1 through 7.1.2 shall be provided for this test.

7.1.1* Heat Flux. A total heat flux gauge (calorimeter) shall be mounted at a height of 26 mm ± 25 mm (1.1 in. ± 0.9 in.) above the floor surface, facing upward, in the geometric center of the test room as shown in Figure 7.1.1.

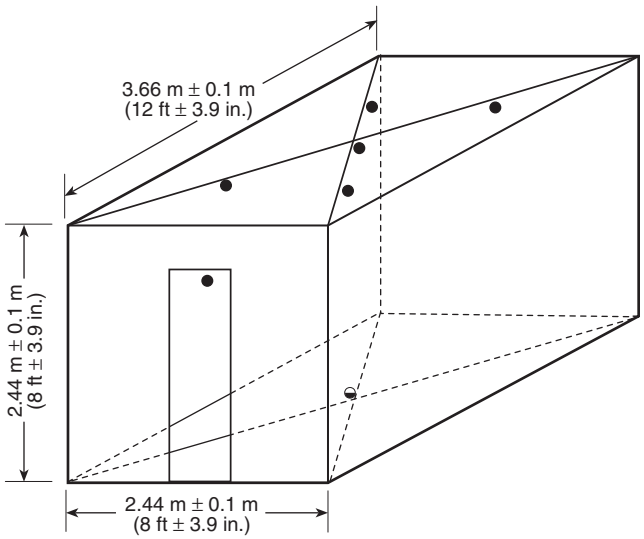

● = Thermocouples – each 102 mm (4 in.) below ceiling, with one additional thermocouple over the burner and 102 mm (4 in.) below the ceiling.

◒ = Calorimeter on floor – 26 mm ± 25 mm (1.1 in. ± 0.9 in.) above floor.

FIGURE 7.1.1 Thermocouple and Calorimeter Placement.

7.1.1.1* The gauge shall be of the Gardon (foil) or Schmidt–Boelter (thermopile) type with a full-scale design range of 50 kW/m^2.

7.1.1.1.1 The target receiving radiation shall be a circular, flat surface not more than 15 mm (0.4 in) in diameter and coated with a matte black finish, having a view angle of 180 degrees.

7.1.1.1.2 The target shall be contained within a water-cooled body whose front face shall be of polished metal that is flat, coinciding with the plane of the target, and circular, with a diameter of not more than 50 mm (2 in.).

7.1.1.2 The heat flux gauge shall have an accuracy of ±3 percent and a repeatability of 0.5 percent.

7.1.1.3 During operation, the heat flux gauge shall be maintained at a constant temperature [±3°C (±5°F)] above the dew point by water supplied at a temperature of 50°C to 65°C (122°F to 149°F).

7.1.1.4 The calibration of the heat flux gauge shall be checked, whenever required, by comparing the calibration with two similar instruments held as, and used exclusively as, reference standards, one of which is to be fully calibrated at yearly intervals.

7.1.2 Thermocouples. Bare Type K Chromel Alumel® thermocouples, 0.5 mm (20 mil) in diameter, shall be used at each required location as shown in Figure 7.1.1.

7.1.2.1 The thermocouple wire within 13 mm (0.5 in.) of the bead shall be run along expected isotherms to minimize conduction errors.

7.1.2.2* The insulation between the Chromel and Alumel wires shall be stable to a temperature not less than 1100°C (2000°F), or the wires shall be separated.

7.1.2.3 A thermocouple shall be located in the interior plane of the door opening on the door centerline, 102 mm (4 in.) from the top.

7.1.2.4 Thermocouples shall be located at six positions, 102 mm (4 in.) below the ceiling.

7.1.2.4.1 These thermocouples shall be located at the center of the ceiling, at the center of each of the four ceiling quadrants, and directly over the center of the ignition burner.

7.1.2.4.2 The thermocouples shall be mounted on supports or shall penetrate through the ceiling with their junctions 102 mm (4 in.) away from a solid surface.

7.1.2.4.3 There shall be no attachments to the test specimens.

7.1.2.4.4 Any ceiling penetration shall be just large enough to permit passage of the thermocouples.

7.1.2.4.5 Spackling compound or ceramic fiber insulation shall be used to backfill the holes around the thermocouple wire.

7.1.3 Paper Targets. Two paper target flashover indicators consisting of a single piece of newsprint crumpled into an approximate 152 mm (6 in.) diameter ball shall be placed on the floor of the test room as shown in Figure 7.1.3.

7.1.4* Video and Photographic Equipment and Recording Procedures. Video and photographic equipment shall be used to record the spread of fire and generation of smoke in the fire test room and the fire projection from the door of the fire test room as indicated in 7.1.4.1 through 7.1.4.4.2.

7.1.4.1 Location and Level of Lighting in Test Room. A nominal 300 watt, flood-type, quartz halogen lamp shall be positioned in the corner diametrically opposite the burner, near the floor level, and shall be aimed at the wall corner/ceiling intersection above the burner.

7.1.4.2 Wall Markings. The interior wall surfaces of the fire test room adjacent to the corner in which the burner is located shall be clearly marked with a 0.3 m (12 in.) grid.

7.1.4.3 Video Recording. A video camera with a manually adjustable iris, adjusted to prevent automatic closing of this iris opening due to brightness of the fire (at least 50 percent open), shall be used.

7.1.4.3.1 A video monitor shall be used to determine when adjustments and compensation for the brightness of the ignition flames are needed.

Copyright National Fire Protection Association
Provided by IHS under license with NFPA
No reproduction or networking permitted without license from IHS
Not for Resale

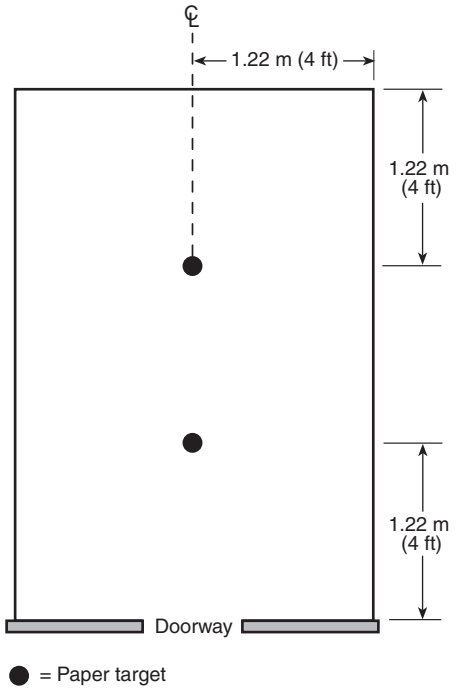

FIGURE 7.1.3 Plan View of Paper Target Arrangement.

7.1.4.3.2 The camera mount shall be adjusted so that the camera lens is approximately 900 mm (3 ft) from the floor.

7.1.4.3.3 The camera angle and magnifications shall be adjusted until the top of the doorway and the top of the burner are visible and the ceiling area directly above the fire is in full view.

7.1.4.3.4 A timer depicting "elapsed time" shall be included in all videos. The timer shall be clearly viewed throughout the test period. The timer shall be permitted to be integral to the video camera.

7.1.4.3.5 Prior to ignition of the burner, the date and laboratory test report identification number shall be filmed. The video shall be started at least 30 seconds prior to ignition of the burner and the video recording shall be continuous for the duration of the test period.

7.1.4.4 Photographic Documentation. A photographic record (still pictures) of the test shall be made.

7.1.4.4.1 A timer depicting "elapsed time" shall be included in all photographs. The timer shall be clearly viewed throughout the test period. The timer shall be permitted to be integral to the camera.

7.1.4.4.2 Prior to ignition of the burner, the date and laboratory test report identification number shall be filmed. Color slides, photographs, or digital images shall be taken at intervals not exceeding 15 seconds for the first 3 minutes of the test and at intervals not exceeding 30 seconds thereafter for the duration of the test.

7.2 Canopy Hood and Exhaust Duct.

7.2.1 A hood shall be installed immediately adjacent to the door of the fire room.

7.2.1.1 The bottom of the hood shall be level with the top surface of the room.

7.2.1.2 The face dimensions of the hood shall be at least 2.44 m × 2.44 m (8 ft × 8 ft), and the depth shall be 1.1 m (3.5 ft).

7.2.1.3 The hood shall feed into a chamber having a 0.91 m × 0.91 m (3 ft × 3 ft) cross-section.

7.2.1.3.1 The chamber shall be a minimum height of 0.91 m (3 ft).

7.2.1.3.2 The chamber height shall be permitted to be increased to a maximum of 1.8 m (6 ft) to satisfy building constraints.

7.2.1.3.3 The exhaust duct connected to a chamber shall comply with all of the following:

(1) It shall be at least 406 mm (16 in.) in diameter.
(2) It shall be horizontal.
(3) It shall be permitted to have a circular aperture of at least 305 mm (12 in.) at its entrance or mixing vanes in the duct as shown in Figure 7.2.1.3.3(a) and Figure 7.2.1.3.3(b).

7.2.2 The hood shall have sufficient exhaust draft to collect all of the combustion products leaving the room.

7.2.2.1 During the test, the exhaust draft shall be capable of moving up to 3.4 m^3/s (7000 standard ft^3/min), equivalent to 7.6 m^3/s (16,100 ft^3/min) at 399°C (750°F).

7.2.2.2 Provision shall be made so that the exhaust draft can operate at 0.47 m^3/s to 3.4 m^3/s (1000 to 7000 standard ft^3/min).

7.2.2.3 Mixing vanes shall be required in the duct if concentration gradients are found to exist.

7.2.3 An alternative exhaust system design shall be permitted to be used if the design meets the requirements outlined in Chapter 8 and the performance requirements in 7.2.2.

7.3 Instrumentation in Exhaust Duct.

7.3.1 The exhaust collection system shall be constructed with all of the following requirements:

(1) A blower
(2) A steel hood
(3) A duct
(4) A bidirectional probe
(5) A thermocouple(s)
(6) An oxygen measurement system
(7) A smoke obscuration measurement system (white light photocell lamp/detector or laser)
(8) A combustion gas sampling and analysis system

7.3.2* A bidirectional probe or an equivalent measuring system shall be used to measure gas velocity in the duct.

7.3.2.1 A typical probe, shown in Figure 7.3.2.1, shall consist of a short stainless steel cylinder that is 44 mm (1.75 in.) long and has a 22 mm (0.875 in.) inside diameter with a solid diaphragm in the center.

7.3.2.2 The pressure taps on either side of the diaphragm shall support the probe.

7.3.2.3 The axis of the probe shall run along the centerline of the duct, 3.35 m (11 ft) downstream from the entrance.

7.3.2.4 The taps shall be connected to a pressure transducer that shall be able to resolve pressure differences of 0.25 Pa (0.001 psi) in H_2O.

Copyright National Fire Protection Association
Provided by IHS under license with NFPA
No reproduction or networking permitted without license from IHS
Not for Resale

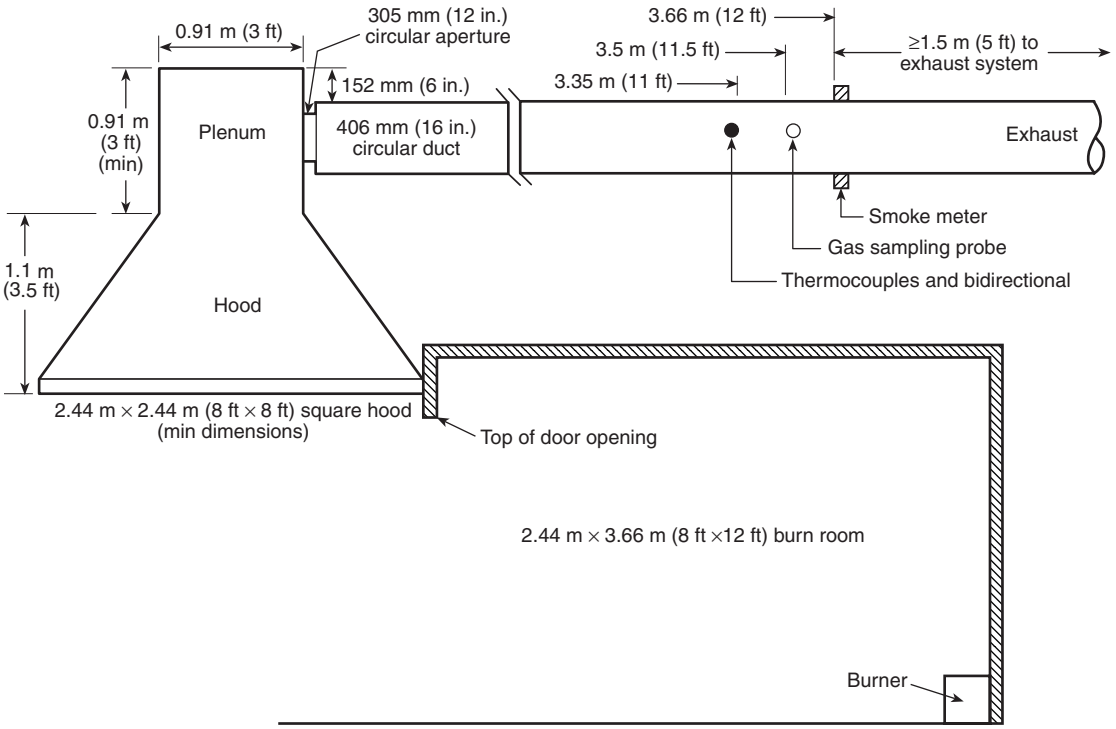

FIGURE 7.2.1.3.3(a) Canopy Hood and Exhaust Duct.

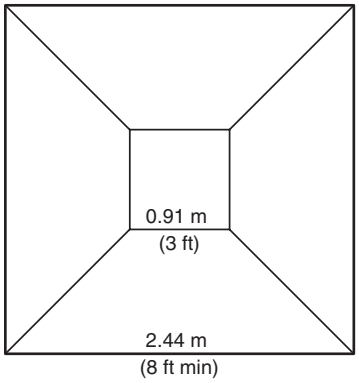

FIGURE 7.2.1.3.3(b) Plan View of Canopy Head.

7.3.3 One pair of thermocouples shall be placed 3.35 m (11 ft) downstream of the entrance to the horizontal duct. The pair of thermocouples shall straddle the center of the duct and shall be separated 50 mm (2 in.) from each other as shown in Figure 7.2.1.3.3(a).

7.3.4 Sampling Line.

7.3.4.1* The sampling line tubes shall be constructed of a material that will not affect the concentration of the combustion gas species to be analyzed.

7.3.4.2 The following sequence of the gas train, shown in Figure 7.3.4.2, shall be used:

(1) Sampling probe
(2) Soot filter
(3) Cold trap

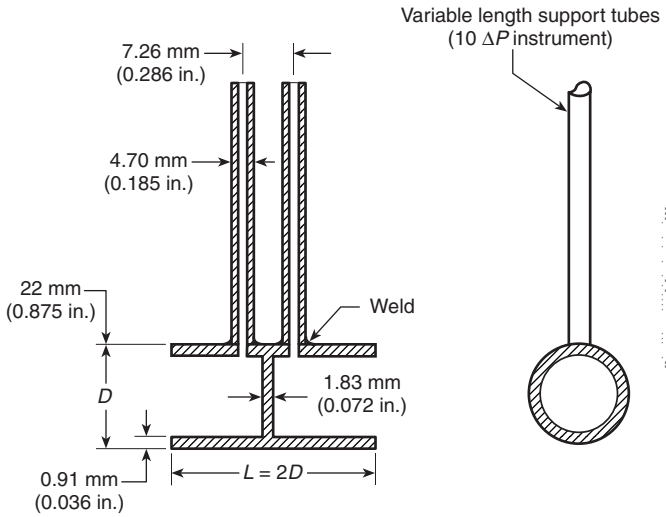

FIGURE 7.3.2.1 Bidirectional Probe.

(4) Gas path pump
(5) Vent valve
(6) Drying column
(7) Flow controller
(8) Oxygen analyzer

7.3.4.3 The gas train shall also include spanning and zeroing facilities.

7.3.4.4* For each gas analyzer used, the system delay time shall be determined for the analyzer to reach a 90 percent response to a step change in the gas concentration.

Copyright National Fire Protection Association
Provided by IHS under license with NFPA
No reproduction or networking permitted without license from IHS
Not for Resale

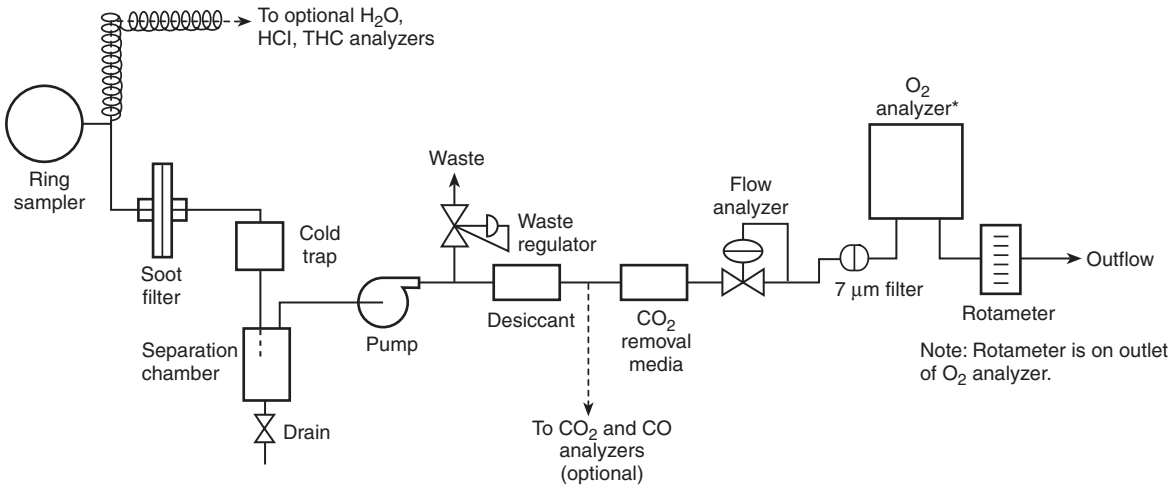

FIGURE 7.3.4.2 Schematic of Gas Train and Mass Train.

7.3.5* Oxygen Concentration. A gas sampling tube shall be located 3.5 m (11.5 ft) downstream from the entrance to the duct at the geometric center of the duct [to within 12.7 mm (½ in.) of the center], to obtain a continuously flowing sample for determining the oxygen concentration of the exhaust gas as a function of time.

7.3.5.1 A filter and cold trap shall be placed in the line ahead of the analyzer to remove particulates and water.

7.3.5.2 The oxygen analyzer shall be of the paramagnetic or polarographic type.

7.3.5.3 The oxygen analyzer shall be capable of measuring oxygen concentration in a range of 21 percent to 15 percent, with a relative accuracy of 50 ppm in this concentration range.

7.3.5.4 The signal from the oxygen analyzer shall be within 5 percent of its final value and shall occur within 30 seconds of introducing a step change in composition of the gas stream flowing past the inlet to the sampling tube.

7.3.5.5 The oxygen analyzer shall include an absolute-pressure transducer for gas pressure variations.

7.3.5.6 A rotameter shall be located on the outlet of the oxygen analyzer.

7.3.6 Carbon Dioxide Concentration.

7.3.6.1 The gas sampling tube described in 7.3.5, or an alternative gas sampling tube at the same location, shall be used to provide a continuous sample for the measurement of the carbon dioxide concentration, by means of an analyzer with a range of 0 to 20 percent, with a maximum relative error of 2 percent of full scale.

7.3.6.2 The total system-response time between the sampling inlet and the meter shall be no longer than 30 seconds to reach a value within 5 percent of the final value, after the introduction of a step change in composition of the gas stream flowing past the inlet to the sampling tube.

7.3.7 Carbon Monoxide Concentration.

7.3.7.1 The gas sampling tube described in 7.3.5, or an alternative gas sampling tube at the same location, shall be used to provide a continuous sample for the measurement of the carbon monoxide concentration, by means of an analyzer with a range of 0 to 10 percent, with a maximum relative error of 2 percent of full scale.

7.3.7.2 The total system-response time between the sampling inlet and the meter shall be no longer than 30 seconds to reach a value within 5 percent of the final value, after the introduction of a step change in composition of the gas stream flowing past the inlet to the sampling tube.

7.3.8 Smoke Obscuration Measurement.

7.3.8.1 An optical system shall be installed for measurement of light obscuration across the centerline of the exhaust duct.

7.3.8.2 The optical density of the smoke shall be determined by measuring the light transmitted with a photometer system consisting of a white light source and a photocell/detector or a laser system for measurement of light obscuration across the centerline of the exhaust duct.

7.3.8.2.1* A white light photometer system shall consist of a lamp, lenses, an aperture, and a photocell as shown in Figure 7.3.8.2.1.

7.3.8.2.2 The system shall be constructed so that soot deposits on the optics during a test do not reduce the light transmission by more than 5 percent.

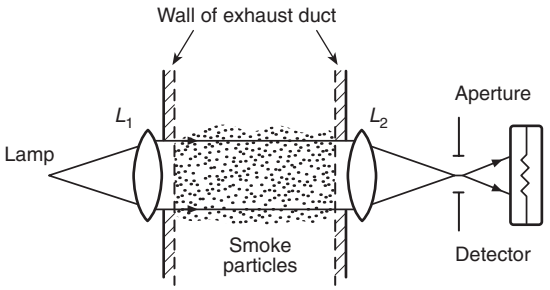

FIGURE 7.3.8.2.1 Optical System Using a White Light.

Copyright National Fire Protection Association
Provided by IHS under license with NFPA
No reproduction or networking permitted without license from IHS
Not for Resale

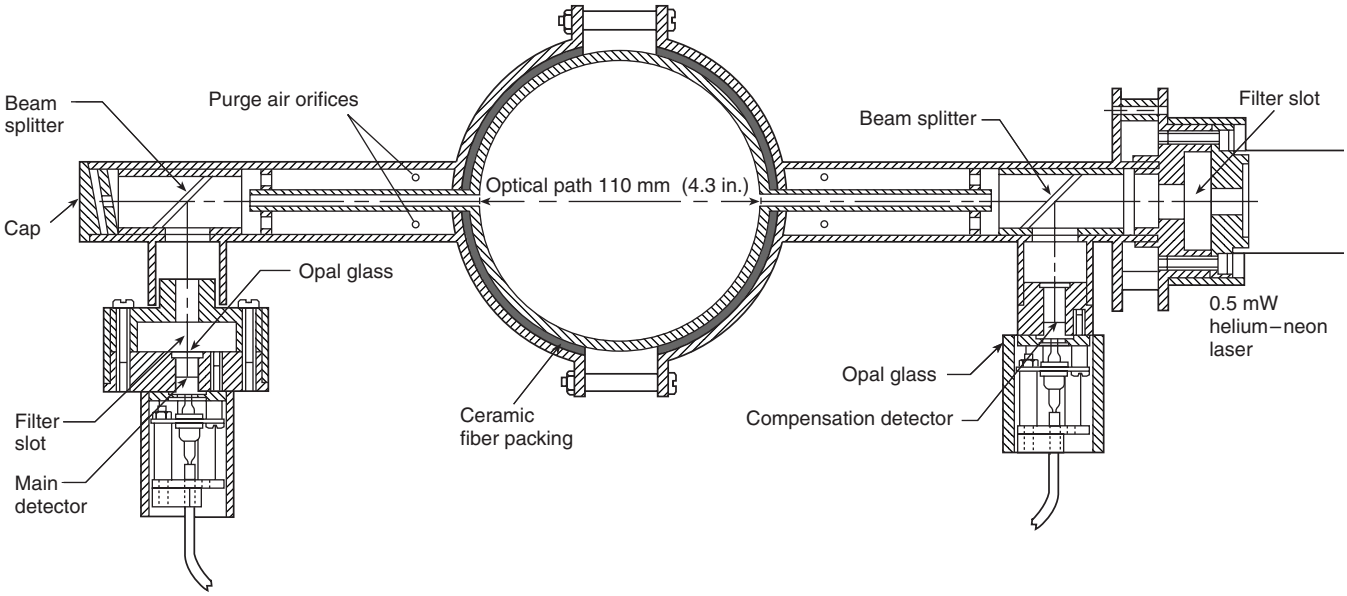

FIGURE 7.3.8.3.2(a) Laser Extinction Beam.

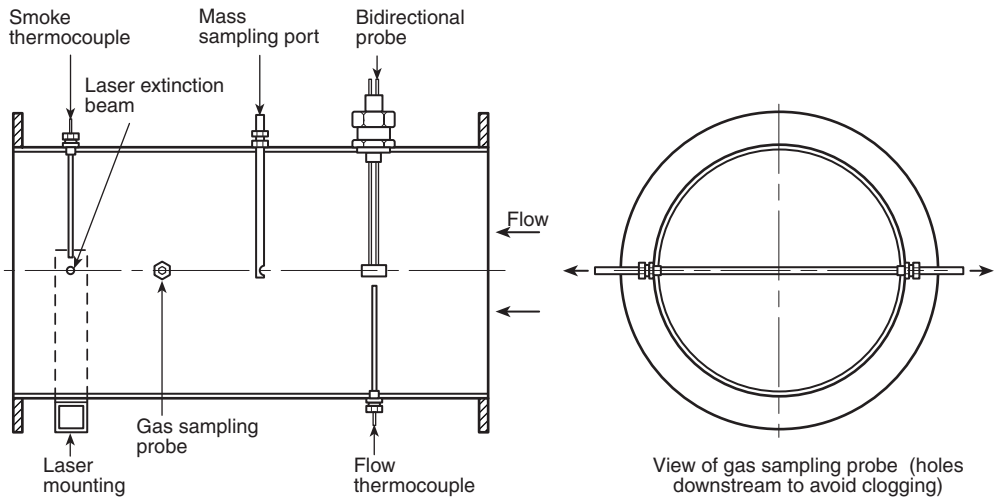

FIGURE 7.3.8.3.2(b) Recommendations for Mounting the Laser Beam and Other Instrumentation in Exhaust Duct.

7.3.8.3* A helium–neon laser system shall consist of silicon photodiodes as main beam and reference detectors, and of electronics to derive an extinction and to set a zero reading.

7.3.8.3.1 A helium–neon laser system shall be designed for split-yoke mounting in two pieces that are rigidly coupled together but resiliently attached to the exhaust duct by means of refractory gasketing.

7.3.8.3.2 A 0.5 mW to 2 mW helium–neon laser beam shall be projected horizontally across the exhaust duct as shown in Figure 7.3.8.3.2(a) and Figure 7.3.8.3.2(b).

Chapter 8 Calibration

8.1 Calibration and Documentation of Ignition Source and Test Equipment.

8.1.1 The following three instruments shall be calibrated with standard sources after initial installation:

(1) Smoke meters
(2) Flow or velocity transducers
(3) Gas analyzers

8.1.2 A calibration test shall have been performed prior to and within 30 days of any fire test, using the standard ignition source under the exhaust hood.

Copyright National Fire Protection Association
Provided by IHS under license with NFPA
No reproduction or networking permitted without license from IHS
Not for Resale

8.1.3 The data resulting from a calibration test shall provide all of the following:

(1) The output as a function of time, after the burner is activated, of all instruments normally used for the standard fire test
(2) The maximum extension of the burner flame, as recorded by still photographs taken at 30-second intervals or continuous video recording
(3) The temperature and velocity profiles across the duct cross-section at the location of the bidirectional probe
(4) The differential pressure across the bidirectional probe

8.1.4 The results obtained in 8.1.3(3) and 8.1.3(4) shall be used to determine the calibration factor, *C*, in the equation in 10.1.3.

8.2* Calibration. The calibration procedure for heat release measurements shall be as follows:

(1) Estimate an approximate value of the calibration factor *C* (C_{est}) as the product of the cross-section of the duct (in square meters) multiplied by 22.1.
(2) Burn propane, as described in 4.1.5, for not less than 15 minutes at a heat release rate of 150 kW ± 5 kW.
   (a) Take measurements at intervals not greater than 6 seconds.
   (b) The response of the system to a stepwise change of the heat output from the burner shall be a maximum of 12 seconds to 90 percent of final value.
   (c) Use a value of combustion expansion factor (α) *(see Section 10.4)*, of energy (E), and of heat of combustion (Ht_{comb}) as follows:

$$\alpha = 1.084$$
$$E = 12.8 \text{ MJ/kg}$$
$$Ht_{comb} = 46.5 \text{ MJ/kg}$$

(3) Calculate the total heat released and the corrected calibration factor C_{est} so that the total heat released, as determined by the oxygen consumption calculation shown in Chapter 10, agrees with the theoretical value obtained from measurement of the volumetric flow rate and weight loss of the fuel, to within ±5 percent, by using the following equation:

$$C_{corr} = \frac{Ht_{comb}(\text{MJ/kg}) \times \text{mass fuel burnt (kg)}}{\int \dot{q}(\text{MW})\,dt} = C_{est}$$

(4) Use the corrected value of calibration factor for all tests.
(5) If the calibration factor does not agree, within ±5 percent, with the value determined during the previous calibration, check the system for leaks or other problems before proceeding with the test.
(6) Correct any problem found during the system check and perform a new calibration in accordance with this chapter.

8.3 Smoke Measurement Calibration. The smoke measuring system shall be calibrated initially using two neutral density filters of significantly different values and also at 100 percent transmission.

8.3.1 Once this calibration is set, no less than the zero value of extinction coefficient (100 percent transmission) shall be verified each day, prior to testing.

8.3.2 If departure from the zero line is found at the end of a calibration test, the problem shall be corrected and a new calibration shall be performed in accordance with this chapter.

8.4* Gas Analyzers Calibration. Gas analyzers shall be calibrated daily, prior to testing, using manufacturers' instructions.

Chapter 9 Test Procedure

9.1 Method. Method B protocol specified in 1.4.1 shall be used.

9.2 Procedure. The test procedure shall be as follows:

(1) Establish an initial volumetric flow rate of at least 0.47 m^3/s (1000 standard ft^3/min) through the duct, and increase the volume flow rate to 3.4 m^3/s (7000 standard ft^3/min) as required to keep the oxygen content above 14 percent and to capture all effluents from the burn room.
(2) Turn on all sampling and recording devices, and establish steady-state baseline readings for at least 2 minutes.
(3) Ignite the gas burner and proceed as follows:
   (a) Start the timer once burner ignition has been observed, and increase gas flow rate to provide a burner rate of heat release equal to the required heat output for the initial period. This rate shall be 40 kW ± 1 kW for 5 minutes ± 10 seconds.
   (b) Continue the exposure at that same level for 5 minutes.
   (c) Within 10 seconds after the 5-minute initial exposure, increase the gas flow rate to provide a rate of heat release by the burner equal to the final heat output for a 10-minute period. This rate shall be 150 kW ± 5 kW.
   (d) Continue the exposure at that same level for 10 minutes ± 10 seconds.
(4) Provide visual documentation in accordance with 7.1.4.
(5) Provide a voice or written record of the fire, which will provide the times of all significant events, such as times of ignition, escape of flames through the doorway, and flashover.
(6) Shut off the ignition burner 15 minutes after start of the test, and terminate the test at that time unless safety considerations dictate an earlier termination.
(7) Document damage after the test, using words, pictures, and drawings.

Chapter 10 Calculations

10.1* Flow Rate Equations. The calculation methods described in this chapter shall be used to determine the rate of heat release.

10.1.1 The mass flow rate through the duct shall be obtained from the velocity measured with a bidirectional probe *(see 7.3.2)*.

10.1.2* The mass flow rate shall be calculated using a measured velocity profile in the duct.

10.1.3 The mass flow rate shall be calculated by using the following equation:

$$\dot{m}_e = C\sqrt{\frac{\Delta\rho}{T_e}}$$

10.1.4* The oxygen depletion factor shall be calculated according to the following equation:

$$\phi = \frac{X_{O_2}^0\left(1 - X_{CO_2} - X_{CO}\right) - X_{O_2}\left(1 - X_{CO_2}^0\right)}{X_{O_2}^0\left(1 - X_{O_2} - X_{CO_2} - X_{CO}\right)}$$

Copyright National Fire Protection Association
Provided by IHS under license with NFPA
No reproduction or networking permitted without license from IHS
Not for Resale

10.1.5 The rate of heat release shall be calculated according to the following equation:

$$\dot{q} = \left[E\phi - (E_{CO} - E)\frac{1-\phi}{X_{O_2}}\left(\frac{X_{CO}}{X_{O_2}}\right)\right]\frac{M_{O_2}}{M_e}\left(\frac{\dot{m}}{1+\phi(\alpha-1)}\right)\left(X^0_{O_2}\right)$$

10.1.6* The total heat released shall be calculated according to the following equation:

$$\text{THR} = \int \dot{q}\, dt$$

10.2 Smoke Measurement Equations.

10.2.1 The extinction coefficient, k, shall be calculated from the following equation:

$$k = \frac{1}{L_p}\ln\left(\frac{I_o}{I}\right)$$

10.2.2 The optical density per unit light path length shall be calculated according to the following equation:

$$\text{OD} = \frac{1}{D}\log\left(\frac{I_o}{I}\right)$$

10.2.3 The volumetric flow rate at the smoke meter shall be calculated as the product of the mass flow rate and the temperature at the measurement point (bidirectional probe), corrected by the density of air at the standard temperature (273.15 K) and by the temperature, in K, as shown in the following equation:

$$\dot{V}_s = \dot{m}_e\left(\frac{T_e}{\rho_o 273.15}\right) = \frac{\dot{m}_e T_e}{353}$$

10.2.4 The rate of smoke release shall be defined by the following equation:

$$\text{RSR} = \dot{V}_s k$$

10.2.5 The total smoke released shall be defined by the following equation:

$$\text{TSR} = \int \text{RSR}\, dt$$

10.3 Release Rate of Combustion Gases.

10.3.1 Carbon Monoxide. The release rate of carbon monoxide shall be calculated from the following equation:

$$\dot{m}_{CO} = \frac{X_{CO}\left(1 - X^0_{O_2} - X^0_{CO_2}\right)}{1 - X_{O_2} - X_{CO_2} - X_{CO}}\left(\frac{M_{CO}}{M_a}\right)\frac{\dot{m}_e}{1+\phi(\alpha-1)}$$

10.3.2 Other Combustion Gases.

10.3.2.1 When other combustion gases are measured, their release rate shall be calculated from the following equation:

$$\dot{m}_x = \frac{\sum\left(X_{xi}\dot{m}_{ei}\Delta t_i\right)\frac{\dot{m}_e}{M_a}}{\text{test period}}$$

10.3.2.2 The release rate of other combustion gases shall be a function of the summation of the concentrations of that gas at each scan in the exhaust (the products of the mole fraction of the combustion gas, the overall mass flow rate for that scan, and the scan period), its molecular weight, and the total test period.

10.4 Symbols.

C	=	calibration factor for orifice plate or bi-directional probe ($kg^{1/2}$, $m^{1/2}$, or $K^{1/2}$)
E	=	net heat released per unit mass of oxygen consumed: 13.1 MJ/kg
E_{CO}	=	net heat released per unit mass of oxygen consumed, for carbon monoxide: 17.6 MJ/kg
Ht_{comb}	=	heat of combustion of the fuel used: 46.5 MJ/kg for propane
I_o	=	light intensity for a beam of parallel light rays, measured in a smoke-free environment, with a detector having the same spectral sensitivity as the human eye and reaching the photodetector
I	=	light intensity for a parallel light beam having traversed a certain length of smoky environment and reaching the photodetector
k	=	extinction coefficient (L/m)
L_p	=	light path length of beam through smoky environment, which is equal to the duct diameter (m)
$\dot{m}_e$	=	mass flow rate in exhaust duct (kg/s)
$\dot{m}_{CO}$	=	release rate of carbon monoxide (kg/s)
$\dot{m}_x$	=	release rate of combustion product x (kg/s)
M_a	=	molecular weight of incoming and exhaust air: 29 kg/kmol
M_{CO}	=	molecular weight of carbon monoxide: 28 kg/kmol
M_{O_2}	=	molecular weight of oxygen: 32 kg/kmol
M_x	=	molecular weight of specimen X
OD	=	optical density per unit light path length (L/m)
$\Delta\rho$	=	pressure drop across the orifice plate or bi-directional probe (Pa)
$\dot{q}$	=	rate of heat release (kW)
RSR	=	rate of smoke release (m^2/s)
Δt	=	scan period (sec)
T_e	=	gas temperature at the orifice plate or bi-directional probe (K)
test period	=	duration of test (sec)
THR	=	total heat released (MJ)
TSR	=	total smoke released (m^2)
$\dot{V}_s$	=	volumetric flow rate at location of smoke meter (value adjusted for smoke measurement calculations) (m^3/s)
X_{CO}	=	measured mole fraction of CO in exhaust flow (nondimensional)
X_{CO_2}	=	measured mole fraction of CO_2 in exhaust flow (nondimensional)
$X^0{}_{CO_2}$	=	measured mole fraction of CO_2 in incoming air (nondimensional)
X_{O_2}	=	measured mole fraction of O_2 in exhaust flow (nondimensional)
$X^0{}_{O_2}$	=	measured mole fraction of O_2 in incoming air (nondimensional)
X_x	=	measured mole fraction of combustion gas x in exhaust flow (nondimensional)
α	=	combustion expansion factor (nondimensional) (Use a value of 1.105, unless the value for the test specimen, not the ignition gas, is known)
ϕ	=	oxygen depletion factor (nondimensional)
ρ_o	=	density of air at 273.15 K: 1.293 (kg/m^3)

--`,,```,,,,````-`-`,,`,,`,`,,`---
Copyright National Fire Protection Association
Provided by IHS under license with NFPA
No reproduction or networking permitted without license from IHS
Not for Resale

Chapter 11 Documentation

11.1 Report. The report shall include the data and information specified in Sections 11.2 through 11.8.

11.2 Materials. Materials shall include all of the following:

(1) Name, thickness, density, and size of the test material, along with other identifying characteristics or labels
(2) Mounting, installation (including attachment method), and conditioning of materials (including all relevant time periods involved)
(3) Layout of specimens in test room (including appropriate drawings)
(4) Relative humidity and temperature of the room and the test building prior to and during the test

11.3 Burner Gas Flow. The burner gas flow shall be the fuel gas flow to the ignition burner and its calculated rate of heat output.

11.4 Time History of the Total Heat Flux to Floor. The time history of the total heat flux to floor shall be the total incident heat flux at the center of the floor for the heat flux gauge as a function of time starting 3 minutes prior to the test.

11.5 Time History of the Gas Temperature. The time history of the gas temperature shall be the temperature of gases in the room, in the doorway, and in the exhaust duct for each thermocouple as a function of time starting 3 minutes prior to the test.

11.6 Time History of the Rate of Heat Release of the Fire.

11.6.1 The rate of heat release shall be calculated from the measured oxygen, carbon monoxide, and carbon dioxide concentrations and the temperature and volumetric flow rate of the gas in the duct.

11.6.2 The rate of heat release time history shall be reported, as well as the maximum and average values.

11.6.3 The total heat released time history shall be reported, as well as the final value and the values of both the rate of heat release and the total heat released, every 1 minute.

11.7 Time History of the Fire Growth. The time history of the fire growth shall be a transcription of the visual, photographic, audio, and written records of the fire test.

11.7.1 The records shall indicate all of the following:

(1) Time of ignition of the wall finish
(2) Approximate location of the flame front most distant from the ignition source at intervals not exceeding 15 seconds during the fire test
(3) Time of flashover
(4) Time at which flames extend outside the doorway

11.7.2 In addition, the visual documentation specified in 7.1.4 shall be supplied.

11.7.3 Drawings, photographs, and video recordings showing the extent of the damage to the materials after the test shall be supplied.

11.8 Time History of Smoke Obscuration. The smoke obscuration shall be described by means of the optical density, rate of smoke release, and total smoke released, measured with the instrumentation in the exhaust duct.

11.8.1 The rate of smoke release and optical density time history shall be reported, as well as the maximum and average values.

11.8.2 The total smoke released time history shall be reported, as well as the final value and the rate of smoke release and total smoke released values every 1 minute.

11.9 Discussion of Performance. A complete discussion of sample performances shall be conducted and shall include all of the following:

(1) Flame spread to ceiling during 40 kW exposure
(2) Presence of burning droplets on the floor that persist in burning 30 seconds or more
(3) Visibility conditions in the fire test room
(4) Other pertinent details with respect to fire growth

Annex A Explanatory Material

Annex A is not a part of the requirements of this NFPA document but is included for informational purposes only. This annex contains explanatory material, numbered to correspond with the applicable text paragraphs.

A.1.1.2 Demountable, relocatable, full-height partitions include demountable, relocatable, full-height partitions that fill the space between the finished floor and the finished ceiling.

A.1.1.5 Freestanding panel furniture systems include all freestanding panels that provide visual separation, acoustical separation, or both and that are intended to be used to divide space or to support components to form complete work stations.

A.1.4 Earlier editions of this test method contained two test protocols for testing textile wallcoverings: Method A (a screening test, now shown as an option in Annex C) and Method B (fully lined walls). In the present edition, Method B is the only mandatory test protocol.

A.3.3.2 Textile. The definition of textile is intended to include carpets or textile floor coverings.

A.4.1.5.2 This net heat of combustion corresponds to a propane gas flow rate of approximately 26.9 L/min for 40 kW and 100.8 L/min at 150 kW, for propane with a net heat of combustion of 46.5 MJ/kg, under standard conditions of 101 kPa (15 psi) absolute pressure and 20°C (68°F) temperature.

A.4.1.6 Two typical arrangements for a gas supply are illustrated in Figure A.4.1.6.

A.4.2.1 A study by R. D. Peacock and J. N. Breese (NBSIR 82-2516, *Computer Fire Modeling for the Prediction of Flashover*) examined the effect of geometric room changes on the minimum energy required to cause flashover. It showed that increased room height beyond 2.4 m (approximately 8 ft) changed the minimum needed flashover energy (expressed as a percentage) as follows: percent $100 + 5.3\ \Delta H$.

Here ΔH is the increase in room height (expressed in meters). Thus, for instance, if the height were changed by 0.2 m (7.8 in.), the energy scaling would be changed by 1.06 percent. This is completely insignificant, since few fire measurements can be made to a repeatability or reproducibility of better than 10 percent. The effects of changing floor areas were similarly modest. Room dimensions having a tolerance of ±0.1 m (±3.9 in.) should be entirely adequate for reproducibility.

A.4.2.4 To facilitate the mounting of the instruments and the ignition source, it is convenient to place the test room so that the floor can be reached from underneath.

Copyright National Fire Protection Association
Provided by IHS under license with NFPA
No reproduction or networking permitted without license from IHS
Not for Resale

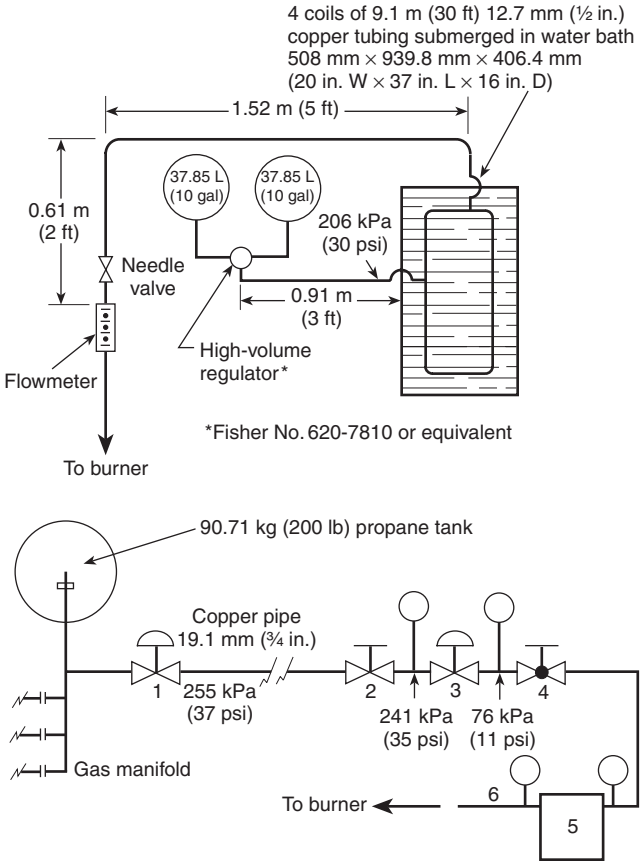

1. Propane gas regulator (high pressure) (main gas supply)
2. Shutoff valve
3. Regulator (low pressure)
4. Adjustable valve for flow impedance
5. Volume meter
6. Steel braid over tubing to burner

Line pressures are shown.

FIGURE A.4.1.6 Two Typical Gas Flow Regulation Systems.

A.4.2.6 If self-supporting panels are tested, a separate exterior frame or block compartment is not required.

A.5.1.2 It has been shown that the specific adhesive used to secure a specimen can significantly affect the fire performance of a wall covering system, and therefore the adhesive utilized should be the same as that intended for actual use.

A.5.3.1 For products where vaporization of solvents occurs (such as those using adhesives) or products containing wood, a conditioning time of 4 weeks is not uncommon.

A.7.1.1 It is preferable to mount the total heat flux gauge at a height between 5 mm and 30 mm (0.2 in. and 1.2 in.) above the floor surface.

A.7.1.1.1 Maintenance of the heat flux gauge will normally require a flow rate of at least 0.38 L/min (0.1 gpm).

A.7.1.2.2 Metal-clad thermocouples with ceramic powder filling have been found satisfactory for this purpose, but silicone-impregnated, glass-insulated thermocouples are likely to break at temperatures above 815°C (1500°F).

A.7.1.4 A window that is cut 0.61 m (2 ft) above the floor in the front wall facing the gas burner and fitted with heat-resistant, impact-resistant glazing provides useful photographic access. Any floodlights used should not raise the ambient temperature in the room above what is specified in Chapter 6.

A.7.3.2 A bidirectional probe is preferable to a pitot-static tube for measuring velocity in the exhaust duct, in order to avoid problems of clogging with soot. Capacitance transducers have been found to be most stable for this application.

A.7.3.4.1 Stainless steel sampling lines have been shown to be satisfactory. Alternative designs of the sampling line should give equivalent results.

The recommended approach to a cooling column (to remove water from the combustion gases) is to use a refrigerated column and separation chamber with a drain plug from which the collected water is removed from time to time. Alternative devices shown to give equivalent results are also acceptable.

A.7.3.4.4 Combustion gas concentration measurements require the use of appropriate time shifts in order to account for the time required for gas analyzer response and for combustion gas transit time within the sampling system.

A.7.3.5 A method for determining suitability of oxygen analyzers for making heat release measurements is as follows:

(1) *General.* The type of oxygen analyzer best suited for fire gas analysis is of the paramagnetic type. Electrochemical analyzers or analyzers using zirconia sensors have generally been found not to have adequate sensitivity or suitability for this type of work. The normal range of the instrument to be used is 0 vol to 25 vol percent oxygen. Normally, the linearity of paramagnetic analyzers is better than can be checked by a user laboratory; therefore, verifying their linearity is not necessary. It is important, however, to confirm the noise and short-term drift of the instrument used.

(2) *Procedure.* Check the analyzer suitability using the following steps:

(a) Connect two different gas bottles that are approximately 2 percentage points apart (for example 15 vol percent and 17 vol percent) to a selector valve at the inlet of the analyzer.

(b) Connect the electrical power and let the analyzer warm up for 24 hours, with one of the test gases from A.7.3.5(2)(a) flowing through it.

(c) Connect a data acquisition system to the output of the analyzer. Quickly switch from the first gas bottle to the second bottle, and immediately start collecting data, taking one data point per second. Collect data for 20 minutes.

(d) Determine the drift by using a least-squares analysis fitting procedure to pass a straight line through the last 19 minutes of data. Extrapolate the line back through the first minute of data. The difference between the readings at 0 minutes and at 20 minutes on the fitted straight line represents the short-term drift. Record the drift in units of parts per million of oxygen.

(e) The noise is represented by the root-mean-square deviation around the fitted straight line. Calculate that root-mean-square value and record it in units of parts per million of oxygen.

Copyright National Fire Protection Association
Provided by IHS under license with NFPA
No reproduction or networking permitted without license from IHS
Not for Resale

(3) *Analyzer.* The analyzer is suitable for use in heat release measurements if the sum of the drift plus the noise terms is 50 ppm oxygen (note that both terms must be expressed as positive numbers).
(4) *Additional Precautions.* A paramagnetic oxygen analyzer is directly sensitive to barometric pressure changes at its outlet port and to flow rate fluctuations in the sample supply stream. It is essential that the flow rate be regulated. Use either a flow rate regulator of the mechanical diaphragm type or an electronic mass flow rate controller. To protect against errors due to changes in barometric pressure, one of the following procedures should be used:
   (a) Control the back pressure to the analyzer with a back pressure regulator of the absolute-pressure type.
   (b) Electrically measure the actual pressure at the detector element, and provide a signal correction for the analyzer output.

See NFPA 271, *Standard Method of Test for Heat and Visible Smoke Release Rates for Materials and Products Using an Oxygen Consumption Calorimeter.*

A.7.3.8.2.1 The following information is being provided for informational purposes only and has not been independently verified, certified, or endorsed by NFPA or any of its technical committees. The system described as follows is an example of a white light measuring system that has been found to be satisfactory:

(1) *Lenses.* Plano convex, diameter 40 mm, focal length 50 mm
(2) *Lamp.* Osram Halo Stars, 64410, 6 V, 10 W, or equivalent
(3) *Photocell.* United Detector Technology, PIN 10 AP, or equivalent
(4) *Power Supply.* Gresham Lion Ltd, Model G 012, or equivalent

A.7.3.8.3 It has been shown that white light and laser systems will give similar results. See the following publications:

(1) "Comparison of Smoke Release Rate from Building Products" by B. Ostman.
(2) "Rate of Heat Release Testing for Vinyl Wire and Cable Materials with Reduced Flammability and Smoke: Small Scale and Full Scale Tests" by A. W. Coaker, M. M. Hirschler, and C. L. Shoemaker.

The following information is being provided for informational purposes only and has not been independently verified, certified, or endorsed by NFPA or any of its technical committees. The system described as follows is an example of a laser measuring system that has been found to be satisfactory:

(1) *Helium–Neon Laser.* Aerotech OEM-05P, or equivalent
(2) *Laser Power Supply.* Aerotech LSS-05, or equivalent
(3) *Photocells.* Hammamatsu S1336-44BK, or equivalent

A.8.2 This calibration is likely to be within 20 percent of the correct value.

A.8.4 ASTM E 800, *Standard Guide for Measurement of Gases Present or Generated During Fires*, offers guidance on calibrating gas analyzers.

A.10.1 Additional information is contained in an article in *Fire Technology*, "Measuring Rate of Heat Release by Oxygen Consumption," by M. Janssens, pp. 234–249.

A.10.1.2 This velocity profile is obtained by measuring velocity at a sufficient number of representative points over the diameter or cross-section of the duct prior to any fire tests. Detailed procedures for obtaining this profile are described in *The Measurement of Air Flow* by E. Ower and R. Pankhurst. Usually, conditions in full-scale fire tests are such that the flow in the duct is turbulent, resulting in a shape factor k_c (equal to the ratio of the average velocity to the velocity along the centerline) close to 1.

Due to considerable soot production in many fires, pitot-static tubes are generally not useful because of the potential for clogging of the holes. To deal with this problem, the bidirectional probe described in 7.3.2 was designed by B. J. McCaffrey and G. Heskestad ("A Robust Bidirectional Low-Velocity Probe for Flame and Fire Application"). This bidirectional probe involves measuring the differential pressure across the probe and the centerline velocity.

A.10.1.4 Water vapor should be removed before the sample air is introduced into the oxygen analyzer. Use a water trap and desiccant to remove the water.

A.10.1.6 Water vapor must be removed before the sample air is introduced into the oxygen analyzer. Use a water trap and desiccant to remove the water. The concentration range of carbon monoxide in most fires is a small fraction of the concentration range of carbon dioxide. Hence, the correction for the heat release rate is generally less than 5 percent. Therefore, carbon monoxide measurements can be ignored.

Annex B Acceptance Criteria

This annex is not a part of the requirements of this NFPA document but is included for informational purposes only.

B.1 The acceptance criteria in Section B.2 have been used by several of the model code organizations such as the International Conference of Building Officials (ICBO), the Building Officials and Code Administrators International (BOCA), and the Southern Building Code Congress International (SBCCI) and are provided as a guide for the user of the test method described in this standard. Similar criteria have also been in use in the *International Building Code (IBC)* and *International Fire Code (IFC)*, both issued by the International Code Council (ICC), and in NFPA *101*, *Life Safety Code*, and *NFPA 5000*, *Building Construction and Safety Code*. The acceptance criteria in Section B.3 have been used by the same codes and continue to be used.

B.2 Textile wall coverings should be considered as demonstrating satisfactory performance if, during the Method A test protocol (as shown in Annex C), both of the following conditions are met:

(1) Flame should not spread to the ceiling during the 40 kW exposure.
(2) During the 150 kW exposure, the following criteria should be met:
   (a) Flame should not spread to the outer extremity of the sample on the 2.44 m × 3.66 m (8 ft × 12 ft) wall.
   (b) The specimen should not burn to the outer extremity of the 0.6 m (2 ft) wide samples mounted vertically in the corner of the room.

Copyright National Fire Protection Association
Provided by IHS under license with NFPA
No reproduction or networking permitted without license from IHS
Not for Resale

(c) Burning droplets that are judged to be capable of igniting the textile wall covering or that persist in burning for 30 seconds or more should not be formed and dropped to the floor.
(d) Flashover should not occur.
(e) The maximum instantaneous net peak rate of heat release should not exceed 300 kW. The maximum instantaneous net peak rate of heat release is derived by subtracting the burner output from the measured maximum rate of heat release.

B.3 Textile wall coverings should be considered as demonstrating satisfactory performance if, during the Method B test protocol, both of the following conditions are met:

(1) Flame should not spread to the ceiling during the 40 kW exposure.
(2) During the 150 kW exposure, the following criteria should be met:
   (a) Flame should not spread to the outer extremities of the samples on the 2.44 m × 3.66 m (8 ft × 12 ft) walls.
   (b) Flashover should not occur.

Annex C Method A Test Protocol

This annex is not a part of the requirements of this NFPA document but is included for informational purposes only.

C.1 Method A test protocol is a screening test method that is useful for testing small amounts of material. The only difference in testing procedure between Test Protocol A and Test Protocol B is the specimen, which does not cover three walls of the test room but simply covers a section of the left sidewall and the rear wall as indicated in Section C.2.

C.2 Specimen Mounting and Installation.

C.2.1 The specimen assembly should be installed on the left sidewall and the rear wall (as viewed from the room door) and as illustrated in Figure C.2.1.

C.2.2 Vertically installed portions of specimen assemblies should extend 0.6 m (2 ft) from the ceiling and should be installed for the full 2.44 m (8 ft) width of the rear wall and the full 3.66 m (12 ft) length of the left sidewall.

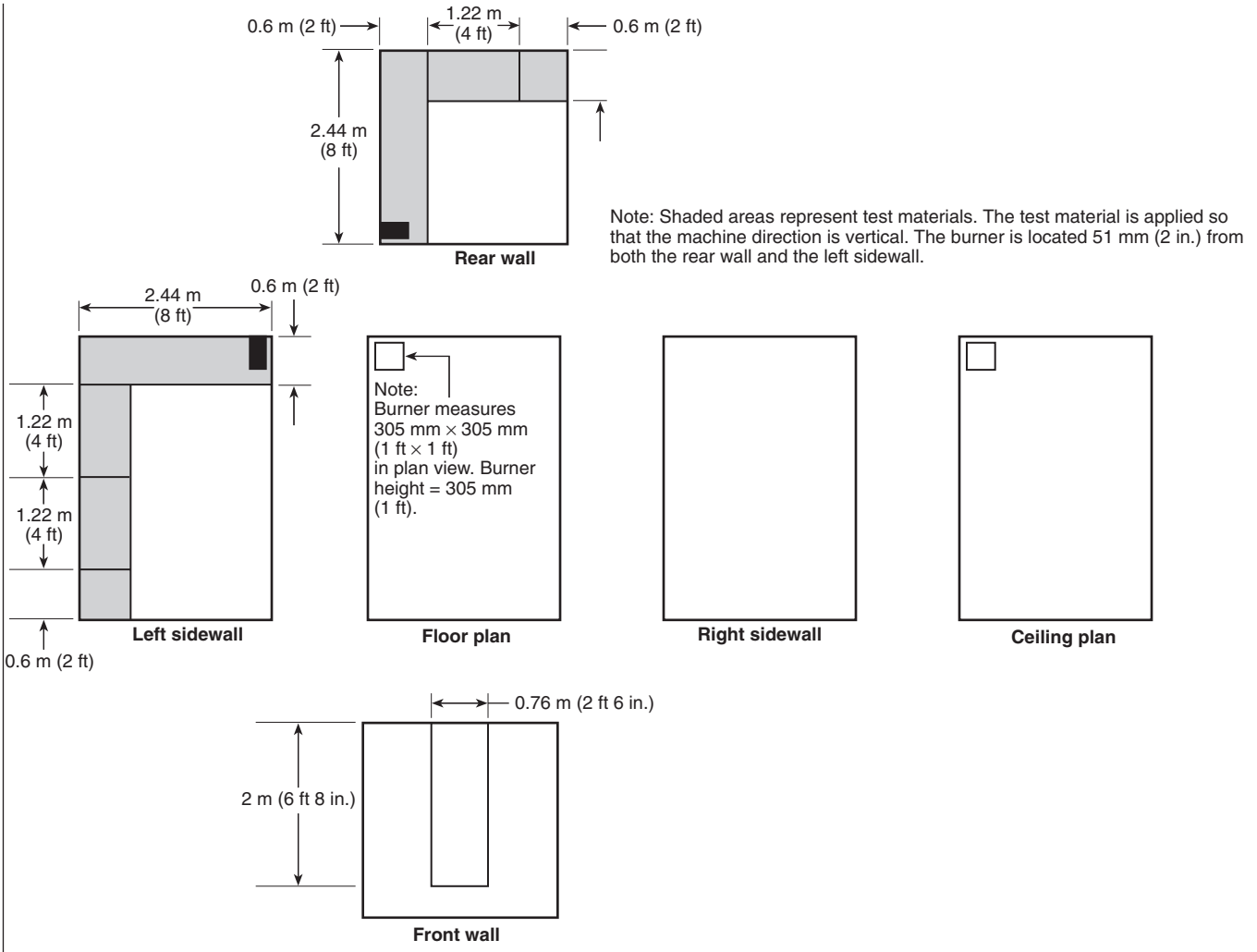

FIGURE C.2.1 Specimen Mounting for Method A Test Protocol.

Copyright National Fire Protection Association
Provided by IHS under license with NFPA
No reproduction or networking permitted without license from IHS
Not for Resale

C.3 When testing using Method B test protocol the test report should note whether burning extended to the outer extremities of the 0.6 m (2 ft) wide samples mounted vertically in the corner of the room. If burning extended to the outer extremities of the sample, the test report should also note the time at which such burning occurred.

Annex D Informational References

D.1 Referenced Publications. The documents or portions thereof listed in this annex are referenced within the informational sections of this standard and are not part of the requirements of this document unless also listed in Chapter 2 for other reasons.

D.1.1 NFPA Publications. National Fire Protection Association, 1 Batterymarch Park, Quincy, MA 02169-7471.

NFPA *101®*, *Life Safety Code®*, 2006 edition.

NFPA 271, *Standard Method of Test for Heat and Visible Smoke Release Rates for Materials and Products Using an Oxygen Consumption Calorimeter*, 2004 edition.

NFPA 5000®, *Building Construction and Safety Code®*, 2006 edition.

D.1.2 Other Publications.

D.1.2.1 ASTM Publications. ASTM International, 100 Barr Harbor Drive, P.O. Box C700, West Conshohocken, PA 19428-2959.

ASTM E 800, *Standard Guide for Measurement of Gases Present or Generated During Fires, Annual Book of ASTM Standards*, Vol. 4.07, 1995.

D.1.2.2 ICC Publications. International Code Council, 5203 Leesburg Pike, Suite 600, Falls Church, VA 22041.

International Building Code (IBC), 2006.

International Fire Code (IFC), 2006.

D.1.2.3 NBSIR Publications. National Institute of Standards and Technology, U.S. Department of Commerce, Fire Research Information Service, Building and Fire Research Laboratory, 100 Bureau Drive, Stop 8600, Gaithersburg, MD 20899-8600.

NBSIR 82-2516, *Computer Fire Modeling for the Prediction of Flashover*, 1982.

D.1.2.4 Additional Publications.

Coaker, A. W., M. M. Hirschler, and C. L. Shoemaker. "Rate of Heat Release Testing for Vinyl Wire and Cable Materials with Reduced Flammability and Smoke: Small Scale and Full Scale Tests," in Proceedings 15th Int. Conf. on Fire Safety, Product Safety Corp., San Francisco, CA, C. J. Hilado, ed., January 8–12, pp. 220–256, 1990.

Janssens, M. L. "Measuring Rate of Heat Release by Oxygen Consumption," *Fire Technology*, pp. 234–249, August 1991.

McCaffrey, B. J., and G. Heskestad. "A Robust Bidirectional Low-Velocity Probe for Flame and Fire Application," *Combustion and Flame*, Vol. 26, No. 1, pp. 125–127, February 1976.

Ostman, B. "Comparison of Smoke Release Rate from Building Products," International Conference FIRE. Control the Heat. . . Reduce the Hazard, London, UK, October 24–25, 1988, Fire Research Station, UK, paper 8.

Ower, E., and R. Pankhurst. *The Measurement of Air Flow*, Pergamon Press, 5th ed., pp. 112–147, 1977.

D.2 Informational References. The following documents or portions thereof are listed here as informational resources only. They are not a part of the requirements of this document.

Fisher, F. L., B. MacCracken, and R. B. Williamson. "Room Fire Tests of Textile Wall Coverings," ES-7853, Service to Industry Report No. 85-4, Fire Research Laboratory, University of California, Berkeley, CA, April 1986.

Gardon, R. "An Instrument for the Direct Measurement of Intense Thermal Radiation," Review of Scientific Instruments, Vol. 24, No. 5, pp. 366–370, May 1953.

D.3 References for Extracts in Informational Sections. (Reserved)

Copyright National Fire Protection Association
Provided by IHS under license with NFPA
No reproduction or networking permitted without license from IHS
Not for Resale

Index

Copyright © 2006 National Fire Protection Association. All Rights Reserved.

The copyright in this index is separate and distinct from the copyright in the document that it indexes. The licensing provisions set forth for the document are not applicable to this index. This index may not be reproduced in whole or in part by any means without the express written permission of NFPA.

-A-

Acceptance criteria ..... Annex B
Adhesives 5.1.2, A.5.1.2
Ambient conditions
Fire room
Air 6.1.1
Relative humidity ..... 6.1.3(2), 11.2(4)
Temperature ..... 6.1.3(1), 11.2(4)
Test building
Relative humidity ..... 6.2.3, 11.2(4)
Temperature ..... 6.2.2, 11.2(4)
Average upper gas layer temperature ..... 1.3.1(7), 1.4.1.3, 1.4.2(3)
Definition 3.3.1

-B-

Bidirectional probes ..... 7.3.1(4), 7.3.2, 8.1.3(3), 8.1.3(4), 10.1.1, A.7.3.2
Building Officials and Code Administrators International (BOCA) B.1
Burners ..... *see* Gas burners

-C-

Calculations ..... Chap. 10
Calibration ..... Chap. 8
Gas analyzers 8.4, A.8.4
Heat flux gauge 7.1.1.4
Heat release measurements 8.2, A.8.2
Ignition source 8.1
Smoke measurement 8.3
Test equipment 8.1
Carbon dioxide concentration 7.3.6, 11.6.1
Carbon monoxide ..... 1.3.1(9)
Concentration 7.3.7, 11.6.1
Release rate 10.3.1
Combustion gases ..... *see also* Carbon monoxide; Gas sampling/analysis systems
Concentrations ..... 1.4.1.5, 7.3.4 to 7.3.7, A.7.3.4.1 to A.7.3.5
Emissions of ..... 1.3.1(10)
Flow rate ..... *see* Gas velocity
Release rates of 10.3
Temperature, time history of 11.5
Toxicity of ..... 1.3.3(1)
Compartment geometry and construction ..... 4.2, A.4.2.1 to A.4.2.6

-D-

Definitions ..... Chap. 3
Documentation ..... 9.2, Chap. 11
Ignition source 8.1
Photographic and video 11.7.2, 11.7.3
Photographic/video records ..... 7.1.4, 9.2(4), A.7.1.4
Test equipment 8.1
Ducts, exhaust ..... *see* Exhaust ducts

-E-

Environmental conditions ..... Chap. 6
Exhaust ducts 1.4.1.5, 7.2, 11.5
Alternative design 7.2.3
Instrumentation in ..... 7.3, A.7.3.2 to A.7.3.8.3
Exhaust gases ..... *see* Combustion gases

-F-

Fire growth 1.2.2, 1.4.1.3, 11.7, 11.9
Fire resistance ..... 1.3.3(2)
Fire room
Environment 6.1
Geometry and construction ..... 4.2, A.4.2.1 to A.4.2.6
Instrumentation ..... 7.1, A.7.1.1 to A.7.1.4
Flame extension beyond doorway ..... 1.3.1(5), 1.4.2(4), 9.2(5), 11.7.1(4)
Flame front, location of ..... 11.7.1(2)
Flame spread ..... 1.3.1(5), 7.1.4, 11.9(1), A.7.1.4, B.2, B.3
Flashover ... 1.3.1(4), 1.4.1.3, 1.4.2, 9.2(5), 11.7.1(3), B.2(2), B.3(2)
Paper target indicators 7.1.3
Floor, heat flux at ..... 1.3.1(6), 1.4.1.3, 1.4.2(2), 11.4
Flow rate ..... *see* Gas velocity
Freestanding panel furniture systems 1.1.5, A.1.1.5

-G-

Gardon (foil) heat flux gauge 7.1.1.1
Gas, combustion ..... *see* Combustion gases
Gas burners 1.4.1.1
Calibration ..... 8.1.3(2)
Gas flow
Report of 11.3
Ignition of ..... 9.2(3)
Shut off of ..... 9.2(6)
Specifications 4.1, A.4.1.5.2, A.4.1.6
Gas sampling/analysis systems ..... 7.3.1(8), 7.3.4 to 7.3.7, A.7.3.4.1 to A.7.3.5
Calibration 8.4, A.8.4
Sampling line tubes 7.3.4, A.7.3.4.1, A.7.3.4.4
Gas train 7.3.4.2
Gas velocity
Flow rate equations 10.1, A.10.1
Measurement of 1.4.1.5, 7.3.2, A.7.3.2

-H-

Heat flux
Floor ..... 1.3.1(6), 1.4.1.3, 1.4.2(2), 11.4
Gauge 7.1.1, 11.4, A.7.1.1
Heat release
Measurements 8.2, A.8.2
Rate ..... 1.3.1(2), 1.4.1.2, 1.4.1.3, 1.4.2(1), 9.2(3)
Calculations ..... Chap. 10
Time history of 11.6
Total ..... 1.3.1(3)
Calculations 10.1.6, A.10.1.6
Time history 11.6
Hood ..... 1.4.1.5, 7.2, 7.3.1(2)
Humidity, relative
Fire room ..... 6.1.3(2), 11.2(4)
Specimen conditioning 5.3.1, A.5.3.1
Test building ..... 6.2.3, 11.2(4)

-I-

Ignition, times of ..... 9.2(5)
Ignition source 4.1, 8.1, A.4.1.5.2, A.4.1.6
Instrumentation ..... Chap. 7; *see also* Bidirectional probes; Exhaust ducts; Gas sampling/analysis systems; Thermocouples
Calibration 8.1.1

--`,,```,,,,````-`-`,,`,,`,`,,`---

Copyright National Fire Protection Association
Provided by IHS under license with NFPA
No reproduction or networking permitted without license from IHS
Not for Resale

Heat flux gauges 7.1.1, 11.4, A.7.1.1
Paper target flashover indicators ..... 1.4.2(5), 7.1.3
Photographic/video equipment 7.1.4, A.7.1.4
Interior dimensions, fire room ..... 4.2, A.4.2.1 to A.4.2.6
International Conference of Building Officials (ICBO) B.1

-L-

Laser light obscuration measurement system 7.3.8.2, 7.3.8.3, A.7.3.8.3

-M-

Method A test protocol ..... A.1.4, Annex C
Method B test protocol, use of 1.4.1, 5.2.1, 9.1, A.1.4
Mounting
Heat flux gauge 7.1.1, A.7.1.1
Specimens ..... 1.4.1, 5.1, 11.2(2), A.5.1.2

-O-

Oxygen analyzers .....*see* Gas sampling/analysis systems
Oxygen concentration ..... 7.3.1(6), 7.3.4.2(8), 7.3.5, 11.6.1, A.7.3.5
Oxygen depletion factor 10.1.4, A.10.1.4

-P-

Panel furniture systems, freestanding 1.1.5, A.1.1.5
Paper target flashover indicators ..... 1.4.2(5), 7.1.3
Partitions, demountable, relocatable, full-height 1.1.2, A.1.1.2
Performance
Acceptance criteria ..... Annex B
Discussion of 11.9
Photographic records ..... 7.1.4, 9.2(4), 11.7.2, 11.7.3, A.7.1.4
Photometer system ..... 7.3.8.1 to 7.3.8.3, A.7.3.8.2.1, A.7.3.8.3
Probes, bidirectional .....*see* Bidirectional probes
Purpose of standard 1.2

-R-

References ..... Annex D
Reports 11.1

-S-

Schmidt–Boelter (thermopile) heat flux gauge 7.1.1.1
Scope of standard 1.1, A.1.1.2, A.1.1.5
Shall (definition) 3.2.1
Should (definition) 3.2.2
Smoke accumulation 6.2.1
Smoke obscuration ..... 1.3.1(8)
Measurement ..... 7.3.1(7), 7.3.8, A.7.3.8.2.1, A.7.3.8.3
Calibration 8.3
Equations 10.2
Time history of 11.8
Smoke release 1.4.1.3
Rate of 10.2.4, 11.8
Total 10.2.5, 11.8
Southern Building Code Congress International (SBCCI) B.1
Specimens
Conditioning ..... 5.3, 11.2(2), A.5.3.1
Installation ..... 5.2, 11.2(2)
Layout in test room ..... 11.2(3)
Mounting ..... 1.4.1, 5.1, 11.2(2), A.5.1.2
Standard (definition) 3.2.3
Summary of test method 1.4, A.1.4
Symbols 10.4

-T-

Temperature
Ambient
Fire room ..... 6.1.3(1)
Test building 6.2.2
Average upper gas layer ..... 1.3.1(7), 1.4.1.3, 1.4.2(3)
Definition 3.3.1
Combustion gases 1.4.1.5, 11.5
Specimen conditioning 5.3.1, A.5.3.1
During test
Fire room ..... 11.2(4)
Test building ..... 11.2(4)
Termination of test ..... 9.2(6)
Test equipment ..... Chap. 5
Calibration and documentation 8.1
Compartment geometry and construction .. 4.2, A.4.2.1 to A.4.2.6
Ignition source 4.1, A.4.1.5.2, A.4.1.6
Test procedure ..... Chap. 9
Textile (definition) 3.3.2, A.3.3.2
Thermocouples ..... 7.1.2, 7.3.1(5), 7.3.3, 11.5, A.7.1.2.2
Time history reports ..... 11.4 to 11.8
Total heat flux gauge 7.1.1, A.7.1.1

-V-

Ventilation
Fire room 1.4.1.4, 4.2.5
Test building 6.1.1
Video records ..... 7.1.4, 9.2(4), 11.7.2, 11.7.3, A.7.1.4

Copyright National Fire Protection Association
Provided by IHS under license with NFPA
No reproduction or networking permitted without license from IHS
Not for Resale

Sequence of Events Leading to Issuance of an NFPA Committee Document

Step 1: Call for Proposals

- Proposed new Document or new edition of an existing Document is entered into one of two yearly revision cycles, and a Call for Proposals is published.

Step 2: Report on Proposals (ROP)

- Committee meets to act on Proposals, to develop its own Proposals, and to prepare its Report.
- Committee votes by written ballot on Proposals. If two-thirds approve, Report goes forward. Lacking two-thirds approval, Report returns to Committee.
- Report on Proposals (ROP) is published for public review and comment.

Step 3: Report on Comments (ROC)

- Committee meets to act on Public Comments to develop its own Comments, and to prepare its report.
- Committee votes by written ballot on Comments. If two-thirds approve, Report goes forward. Lacking two-thirds approval, Report returns to Committee.
- Report on Comments (ROC) is published for public review.

Step 4: Technical Report Session

- "*Notices of intent to make a motion"* are filed, are reviewed, and valid motions are certified for presentation at the Technical Report Session. ("Consent Documents" that have no certified motions bypass the Technical Report Session and proceed to the Standards Council for issuance.)
- NFPA membership meets each June at the Annual Meeting Technical Report Session and acts on Technical Committee Reports (ROP and ROC) for Documents with "certified amending motions."
- Committee(s) vote on any amendments to Report approved at NFPA Annual Membership Meeting.

Step 5: Standards Council Issuance

- Notification of intent to file an appeal to the Standards Council on Association action must be filed within 20 days of the NFPA Annual Membership Meeting.
- Standards Council decides, based on all evidence, whether or not to issue Document or to take other action, including hearing any appeals.

Committee Membership Classifications

The following classifications apply to Technical Committee members and represent their principal interest in the activity of the committee.

M *Manufacturer:* A representative of a maker or marketer of a product, assembly, or system, or portion thereof, that is affected by the standard.

U *User:* A representative of an entity that is subject to the provisions of the standard or that voluntarily uses the standard.

I/M *Installer/Maintainer:* A representative of an entity that is in the business of installing or maintaining a product, assembly, or system affected by the standard.

L *Labor:* A labor representative or employee concerned with safety in the workplace.

R/T *Applied Research/Testing Laboratory:* A representative of an independent testing laboratory or independent applied research organization that promulgates and/or enforces standards.

E *Enforcing Authority:* A representative of an agency or an organization that promulgates and/or enforces standards.

I *Insurance:* A representative of an insurance company, broker, agent, bureau, or inspection agency.

C *Consumer:* A person who is, or represents, the ultimate purchaser of a product, system, or service affected by the standard, but who is not included in the *User* classification.

SE *Special Expert:* A person not representing any of the previous classifications, but who has a special expertise in the scope of the standard or portion thereof.

NOTES;
1. "Standard" connotes code, standard, recommended practice, or guide.
2. A representative includes an employee.
3. While these classifications will be used by the Standards Council to achieve a balance for Technical Committees, the Standards Council may determine that new classifications of members or unique interests need representation in order to foster the best possible committee deliberations on any project. In this connection, the Standards Council may make appointments as it deems appropriate in the public interest, such as the classification of "Utilities" in the National Electrical Code Committee.
4. Representatives of subsidiaries of any group are generally considered to have the same classification as the parent organization.

Copyright National Fire Protection Association
Provided by IHS under license with NFPA
No reproduction or networking permitted without license from IHS
Not for Resale

NFPA Technical Committee Document Proposal Form

NOTE: All Proposals must be received by 5:00 p.m. EST/EDST on the published Proposal Closing Date.

For further information on the standards-making process, please contact the Codes and Standards Administration at 617-984-7249.

For technical assistance, please call NFPA at 617-770-3000.

FOR OFFICE USE ONLY

Log #:

Date Rec'd:

Please indicate in which format you wish to receive your ROP/ROC ☐ **electronic** ☐ **paper** ☒ **download**
(Note: If choosing the download option, you must view the ROP/ROC from our website; no copy will be sent to you.)

Date April 1, 200X **Name** John J. Doe **Tel. No.** 716-555-1234

Company Air Canada Pilot's Association

Street Address 123 Summer Street Lane **City** Lewiston **State** NY **Zip** 14092

Please indicate organization represented (if any)

1. (a) NFPA Document Title National Fuel Gas Code **NFPA No. & Year** 54, 200X Edition

(**b) Section/Paragraph** 3.3

2. Proposal Recommends (check one): ☐ new text ☒ revised text ☐ deleted text

3. Proposal (include proposed new or revised wording, or identification of wording to be deleted): [Note: Proposed text should be in legislative format, i.e., use underscore to denote wording to be inserted (inserted wording) and strike-through to denote wording to be deleted (~~deleted wording~~).]

Revise definition of effective ground-fault current path to read:

3.3.78 Effective Ground-Fault Current Path. An intentionally constructed, permanent, low impedance electrically conductive path designed and intended to carry ~~underground~~ electric fault current ~~conditions~~ from the point of a ground fault on a wiring system to the electrical supply source.

4. Statement of Problem and Substantiation for Proposal: (Note: State the problem that would be resolved by your recommendation; give the specific reason for your Proposal, including copies of tests, research papers, fire experience, etc. If more than 200 words, it may be abstracted for publication.)

Change uses proper electrical terms.

5. Copyright Assignment

(a) ☐ **I am the author of the text or other material (such as illustrations, graphs) proposed in this Proposal.**

(b) ☒ **Some or all of the text or other material proposed in this Proposal was not authored by me. Its source is as follows** (please identify which material and provide complete information on its source)**:**

ABC Co.

I hereby grant and assign to NFPA all and full rights in copyright in this Proposal and understand that I acquire no rights in any publication of NFPA in which this Proposal in this or another similar or analogous form is used. Except to the extent that I do not have authority to make an assignment in materials that I have identified in (b) above, I hereby warrant that I am the author of this Proposal and that I have full power and authority to enter into this assignment.

Signature (Required)

PLEASE USE SEPARATE FORM FOR EACH PROPOSAL • NFPA Fax: (617) 770-3500
Mail to: Secretary, Standards Council, National Fire Protection Association, 1 Batterymarch Park, Quincy, MA 02169-7471

8/29/2006

SAMPLE

--`,,```,,,,````-`-`,,`,,`,`,,`---

Copyright National Fire Protection Association
Provided by IHS under license with NFPA
No reproduction or networking permitted without license from IHS

Not for Resale

NFPA Technical Committee Document Proposal Form

NOTE: All Proposals must be received by 5:00 p.m. EST/EDST on the published Proposal Closing Date.

For further information on the standards-making process, please contact the Codes and Standards Administration at 617-984-7249.

For technical assistance, please call NFPA at 617-770-3000.

FOR OFFICE USE ONLY

Log #: _____

Date Rec'd: _____

Please indicate in which format you wish to receive your ROP/ROC ☐ electronic ☐ paper ☐ download
(Note: If choosing the download option, you must view the ROP/ROC from our website; no copy will be sent to you.)

Date _____ **Name** _____ **Tel. No.** _____

Company _____

Street Address _____ **City** _____ **State** _____ **Zip** _____

Please indicate organization represented (if any) _____

1. (a) NFPA Document Title _____ **NFPA No. & Year** _____

(**b) Section/Paragraph** _____

2. Proposal Recommends (check one): ☐ new text ☐ revised text ☐ deleted text

3. Proposal (include proposed new or revised wording, or identification of wording to be deleted): [Note: Proposed text should be in legislative format, i.e., use underscore to denote wording to be inserted (inserted wording) and strike-through to denote wording to be deleted (~~deleted wording~~).]

4. Statement of Problem and Substantiation for Proposal: (Note: State the problem that would be resolved by your recommendation; give the specific reason for your Proposal, including copies of tests, research papers, fire experience, etc. If more than 200 words, it may be abstracted for publication.)

5. Copyright Assignment

(a) ☐ I am the author of the text or other material (such as illustrations, graphs) proposed in this Proposal.

(b) ☐ Some or all of the text or other material proposed in this Proposal was not authored by me. Its source is as follows (please identify which material and provide complete information on its source)**:**

_____

I hereby grant and assign to NFPA all and full rights in copyright in this Proposal and understand that I acquire no rights in any publication of NFPA in which this Proposal in this or another similar or analogous form is used. Except to the extent that I do not have authority to make an assignment in materials that I have identified in (b) above, I hereby warrant that I am the author of this Proposal and that I have full power and authority to enter into this assignment.

Signature (Required) _____

PLEASE USE SEPARATE FORM FOR EACH PROPOSAL • NFPA Fax: (617) 770-3500

Mail to: Secretary, Standards Council, National Fire Protection Association, 1 Batterymarch Park, Quincy, MA 02169-7471

8/29/2006

--`,,```,,,,````-`-`,,`,,`,`,,`---

Copyright National Fire Protection Association
Provided by IHS under license with NFPA
No reproduction or networking permitted without license from IHS

Not for Resale