NFPA 262

Standard Method of Test for Flame Travel and Smoke of Wires and Cables for Use in Air-Handling Spaces

2007 Edition

NFPA, 1 Batterymarch Park, Quincy, MA 02169-7471
An International Codes and Standards Organization

Copyright National Fire Protection Association
Provided by IHS under license with NFPA
No reproduction or networking permitted without license from IHS

Not for Resale

IMPORTANT NOTICES AND DISCLAIMERS CONCERNING NFPA DOCUMENTS

NOTICE AND DISCLAIMER OF LIABILITY CONCERNING THE USE OF NFPA DOCUMENTS

NFPA codes, standards, recommended practices, and guides, of which the document contained herein is one, are developed through a consensus standards development process approved by the American National Standards Institute. This process brings together volunteers representing varied viewpoints and interests to achieve consensus on fire and other safety issues. While the NFPA administers the process and establishes rules to promote fairness in the development of consensus, it does not independently test, evaluate, or verify the accuracy of any information or the soundness of any judgments contained in its codes and standards.

The NFPA disclaims liability for any personal injury, property or other damages of any nature whatsoever, whether special, indirect, consequential or compensatory, directly or indirectly resulting from the publication, use of, or reliance on this document. The NFPA also makes no guaranty or warranty as to the accuracy or completeness of any information published herein.

In issuing and making this document available, the NFPA is not undertaking to render professional or other services for or on behalf of any person or entity. Nor is the NFPA undertaking to perform any duty owed by any person or entity to someone else. Anyone using this document should rely on his or her own independent judgment or, as appropriate, seek the advice of a competent professional in determining the exercise of reasonable care in any given circumstances.

The NFPA has no power, nor does it undertake, to police or enforce compliance with the contents of this document. Nor does the NFPA list, certify, test or inspect products, designs, or installations for compliance with this document. Any certification or other statement of compliance with the requirements of this document shall not be attributable to the NFPA and is solely the responsibility of the certifier or maker of the statement.

--`,,```,,,,````-`-`,,`,,`,`,,`---

Copyright National Fire Protection Association
Provided by IHS under license with NFPA
No reproduction or networking permitted without license from IHS

Not for Resale

ADDITIONAL NOTICES AND DISCLAIMERS

Updating of NFPA Documents

Users of NFPA codes, standards, recommended practices, and guides should be aware that these documents may be superseded at any time by the issuance of new editions or may be amended from time to time through the issuance of Tentative Interim Amendments. An official NFPA document at any point in time consists of the current edition of the document together with any Tentative Interim Amendments and any Errata then in effect. In order to determine whether a given document is the current edition and whether it has been amended through the issuance of Tentative Interim Amendments or corrected through the issuance of Errata, consult appropriate NFPA publications such as the National Fire Codes® Subscription Service, visit the NFPA website at www.nfpa.org, or contact the NFPA at the address listed below.

Interpretations of NFPA Documents

A statement, written or oral, that is not processed in accordance with Section 6 of the Regulations Governing Committee Projects shall not be considered the official position of NFPA or any of its Committees and shall not be considered to be, nor be relied upon as, a Formal Interpretation.

Patents

The NFPA does not take any position with respect to the validity of any patent rights asserted in connection with any items which are mentioned in or are the subject of NFPA codes, standards, recommended practices, and guides, and the NFPA disclaims liability for the infringement of any patent resulting from the use of or reliance on these documents. Users of these documents are expressly advised that determination of the validity of any such patent rights, and the risk of infringement of such rights, is entirely their own responsibility.

NFPA adheres to applicable policies of the American National Standards Institute with respect to patents. For further information contact the NFPA at the address listed below.

Law and Regulations

Users of these documents should consult applicable federal, state, and local laws and regulations. NFPA does not, by the publication of its codes, standards, recommended practices, and guides, intend to urge action that is not in compliance with applicable laws, and these documents may not be construed as doing so.

Copyrights

This document is copyrighted by the NFPA. It is made available for a wide variety of both public and private uses. These include both use, by reference, in laws and regulations, and use in private self-regulation, standardization, and the promotion of safe practices and methods. By making this document available for use and adoption by public authorities and private users, the NFPA does not waive any rights in copyright to this document.

Use of NFPA documents for regulatory purposes should be accomplished through adoption by reference. The term "adoption by reference" means the citing of title, edition, and publishing information only. Any deletions, additions, and changes desired by the adopting authority should be noted separately in the adopting instrument. In order to assist NFPA in following the uses made of its documents, adopting authorities are requested to notify the NFPA (Attention: Secretary, Standards Council) in writing of such use. For technical assistance and questions concerning adoption of NFPA documents, contact NFPA at the address below.

For Further Information

All questions or other communications relating to NFPA codes, standards, recommended practices, and guides and all requests for information on NFPA procedures governing its codes and standards development process, including information on the procedures for requesting Formal Interpretations, for proposing Tentative Interim Amendments, and for proposing revisions to NFPA documents during regular revision cycles, should be sent to NFPA headquarters, addressed to the attention of the Secretary, Standards Council, NFPA, 1 Batterymarch Park, P.O. Box 9101, Quincy, MA 02269-9101.

For more information about NFPA, visit the NFPA website at www.nfpa.org.

Copyright National Fire Protection Association
Provided by IHS under license with NFPA
No reproduction or networking permitted without license from IHS
Not for Resale

Copyright © 2006 National Fire Protection Association. All Rights Reserved.

NFPA 262

Standard Method of

Test for Flame Travel and Smoke of Wires and Cables for Use in Air-Handling Spaces

2007 Edition

This edition of NFPA 262, *Standard Method of Test for Flame Travel and Smoke of Wires and Cables for Use in Air Handling Spaces*, was prepared by the Technical Committee on Fire Tests. It was issued by the Standards Council on July 28, 2006, with an effective date of August 17, 2006, and supersedes all previous editions.

This edition of NFPA 262 was approved as an American National Standard on August 17, 2006.

Origin and Development of NFPA 262

The test procedure covered by this standard was originally developed by Underwriters Laboratories Inc. and published as UL 910, *Standard for Safety Test for Flame-Propagation and Smoke-Density Values for Electrical and Optical-Fiber Cables Used in Spaces Transporting Environmental Air*. It is an adaptation of the Steiner tunnel test (NFPA 255, *Standard Method of Test of Surface Burning Characteristics of Building Materials*; ASTM E 84, *Standard Test Method for Surface Burning Characteristics of Building Materials*; UL 723, *Tests for Surface Burning Characteristics of Building Materials*), which was designed to provide information for evaluating the potential for fire spread along cables and wires housed in a plenum or other environmental space. The original 1985 edition was reconfirmed in 1990. The 1994 edition contained minor editorial changes.

The 1999 edition was revised to reflect the practices that were used with this type of test apparatus and procedure. Revisions were made to the requirements associated with the fire test chamber transition, exhaust blower instrumentation, and data acquisition. The title and scope were editorially revised to reflect the true application of the test procedures, for the testing of flame travel and optical density of smoke for wires and cables used in an air-handling space.

The 2002 edition was revised to conform with NFPA's formatting requirements, in compliance with the provisions of the *Manual of Style for NFPA Technical Committee Documents*. The chapters were reorganized to reflect the NFPA standard document format, metric conversions were reviewed and revised, and some editorial clarifications were made.

The 2007 edition is a reconfirmation of the 2002 edition.

Copyright National Fire Protection Association
Provided by IHS under license with NFPA
No reproduction or networking permitted without license from IHS
Not for Resale

Technical Committee on Fire Tests

William E. Fitch, *Chair*
Omega Point Laboratories Incorporated, TX [RT]

Jesse J. Beitel, Hughes Associates, Incorporated, MD [SE]
April L. Berkol, Starwood Hotels & Resorts Worldwide, Incorporated, NY [U]
Rep. American Hotel & Lodging Association
Robert G. Bill, Jr., FM Global, MA [I]
John A. Blair, The DuPont Company, DE [M]
Rep. Society of the Plastics Industry, Incorporated
Gordon H. Damant, Inter-City Testing & Consulting Corporation of California, CA [SE]
Thomas W. Fritz, Armstrong World Industries, Incorporated, PA [M]
Pravinray D. Gandhi, Underwriters Laboratories Incorporated, IL [RT]
James R. Griffith, Southwest Research Institute, TX [RT]
Gordon E. Hartzell, Hartzell Consulting, Incorporated, TX [SE]
Marcelo M. Hirschler, GBH International, CA [SE]
Alfred J. Hogan, Reedy Creek Improvement District, FL [E]
Rep. International Fire Marshals Association
William E. Koffel, Koffel Associates, Incorporated, MD [SE]
James R. Lawson, U.S. National Institute of Standards and Technology, MD [RT]
Rodney A. McPhee, Canadian Wood Council, Canada [M]
Frederick W. Mowrer, University of Maryland, MD [SE]
David T. Sheppard, U.S. Department of Justice, MD [RT]
Kuma Sumathipala, American Forest & Paper Association, DC [M]
T. Hugh Talley, Hugh Talley Company, TN [M]
Rep. Upholstered Furniture Action Council
Rick Thornberry, The Code Consortium, Incorporated, CA [SE]
William A. Webb, Schirmer Engineering Corporation, IL [I]
Robert A. Wessel, Gypsum Association, DC [M]
Robert J. Wills, American Iron and Steel Institute, AL [M]
Peter J. Willse, GE Global Asset Protection Services, CT [I]

Alternates

Robert M. Berhinig, Underwriters Laboratories Incorporated, IL [RT]
(Alt. to P. D. Gandhi)
Delbert F. Boring, Jr., American Iron and Steel Institute, OH [M]
(Alt. to R. J. Wills)
Richard J. Davis, FM Global, MA [I]
(Alt. to R. G. Bill)
Sam W. Francis, American Forest & Paper Association, PA [M]
(Alt. to K. Sumathipala)
Richard G. Gann, U.S. National Institute of Standards and Technology, MD [RT]
(Alt. to J. R. Lawson)
Paul A. Hough, Armstrong World Industries, Incorporated, PA [M]
(Alt. to T. W. Fritz)
Marc L. Janssens, Southwest Research Institute, TX [RT]
(Alt. to J. R. Griffith)
James K. Lathrop, Koffel Associates, Incorporated, CT [SE]
(Alt. to W. E. Koffel)
James A. Milke, University of Maryland, MD [SE]
(Alt. to F. W. Mowrer)
Arthur J. Parker, Hughes Associates, Incorporated, MD [SE]
(Alt. to J. J. Beitel)
Ronald A. Schulz, GE Global Asset Protection Services, MI [I]
(Alt. to P. J. Willse)
Ineke Van Zeeland, Canadian Wood Council, Canada [M]
(Alt. to R. A. McPhee)
Joe Ziolkowski, American Furniture Manufacturers Association, NC [M]
(Alt. to T. H. Talley)

Nonvoting

Robert H. Barker, American Fiber Manufacturers Association, VA [M]
(Alt. to T. L. Jilg)
Tod L. Jilg, Hoechst Celanese Corporation, NC [M]
Rep. American Fiber Manufacturers Association
Rohit Khanna, U.S. Consumer Product Safety Commission, MD [C]

Milosh T. Puchovsky, NFPA Staff Liaison

This list represents the membership at the time the Committee was balloted on the final text of this edition. Since that time, changes in the membership may have occurred. A key to classifications is found at the back of the document.

NOTE: Membership on a committee shall not in and of itself constitute an endorsement of the Association or any document developed by the committee on which the member serves.

Committee Scope: This Committee shall have primary responsibility for documents on fire testing procedures, for reviewing existing fire test standards and recommending appropriate action to NFPA, for recommending the application of and advising on the interpretation of acceptable test standards for fire problems of concern to NFPA technical committees and members, and for acting in a liaison capacity between NFPA and the committees of other organizations writing fire test standards. This Committee does not cover fire tests that are used to evaluate extinguishing agents, devices, or systems.

Copyright National Fire Protection Association
Provided by IHS under license with NFPA
No reproduction or networking permitted without license from IHS
Not for Resale

Contents

Chapter 1 Administration **262–** 4
1.1 Scope **262–** 4
1.2 Purpose **262–** 4
1.3 Application **262–** 4
1.4 Units **262–** 4
1.5 Summary of Test Method **262–** 4

Chapter 2 Referenced Publications **262–** 4
2.1 General **262–** 4
2.2 NFPA Publications **262–** 5
2.3 Other Publications **262–** 5
2.4 References for Extracts in Mandatory Sections. (Reserved) **262–** 5

Chapter 3 Definitions **262–** 5
3.1 General **262–** 5
3.2 NFPA Official Definitions **262–** 5
3.3 General Definitions **262–** 5

Chapter 4 Test Apparatus **262–** 5
4.1 Fire Test Room **262–** 5
4.2 Fire Test Apparatus **262–** 5
4.3 Fire Test Chamber Airflow System **262–** 9
4.4 Ladder Cable Tray **262–**10
4.5 Fire Test Chamber Temperature Measurement Instruments **262–**10
4.6 Data Acquisition Equipment **262–**10

Chapter 5 Test Specimens **262–**11
5.1 Specimens **262–**11

Chapter 6 Maintenance and Calibration of Test Equipment **262–**11
6.1 Maintenance **262–**11
6.2 Frequency of Calibration **262–**11
6.3 Airflow **262–**11
6.4 Smoke Measurement System Calibration Test **262–**11
6.5 Fuel **262–**12
6.6 Reinforced Inorganic Cement Board Test **262–**12
6.7 Standard Insulated Conductor Test **262–**12

Chapter 7 Test Specimen Preparation **262–**13
7.1 Specimen Conditioning **262–**13
7.2 Determination of Specimen Diameter **262–**13
7.3 Number of Cable Lengths **262–**14
7.4 Cable Mounting **262–**14

Chapter 8 Test Procedure **262–**14
8.1 Procedure **262–**14
8.2 Exhaust Duct Velocity Measurement Calculations **262–**15

Chapter 9 Post-Test Cleanup and Inspection **262–**15
9.1 Debris **262–**15
9.2 Windows **262–**15
9.3 Supports **262–**15
9.4 Damaged Boards **262–**15
9.5 Preparation for Next Test **262–**15
9.6 Cleanliness of Smoke Measurement System **262–**15

Chapter 10 Calculations **262–**15
10.1 Optical Density of Smoke **262–**15
10.2 Exhaust Duct Velocity Measurement Calculations **262–**15

Chapter 11 Report **262–**15
11.1 Data **262–**15

Chapter 12 Precision and Bias **262–**16
12.1 Applicability **262–**16

Annex A Explanatory Material **262–**16

Annex B Smoke and Heat Release Measurements **262–**17

Annex C Smoke Measurement System and Chamber-Brick Configuration: Detail Drawings **262–**19

Annex D Informational References **262–**28

Index **262–**29

--`,,```,,,,````-`-`,,`,,`,`,,`---

Copyright National Fire Protection Association
Provided by IHS under license with NFPA
No reproduction or networking permitted without license from IHS

Not for Resale

NFPA 262

Standard Method of

Test for Flame Travel and Smoke of Wires and Cables for Use in Air-Handling Spaces

2007 Edition

IMPORTANT NOTE: This NFPA document is made available for use subject to important notices and legal disclaimers. These notices and disclaimers appear in all publications containing this document and may be found under the heading "Important Notices and Disclaimers Concerning NFPA Documents." They can also be obtained on request from NFPA or viewed at www.nfpa.org/disclaimers.

NOTICE: An asterisk (*) following the number or letter designating a paragraph indicates that explanatory material on the paragraph can be found in Annex A.

Information on referenced publications can be found in Chapter 2 and Annex D.

Chapter 1 Administration

1.1 Scope.

1.1.1* This standard shall prescribe the methodology to measure flame travel distance and optical density of smoke for insulated, jacketed, or both, electrical wires and cables and optical fiber cables that are to be installed in plenums and other spaces used to transport environmental air without being enclosed in raceways.

1.1.2 This test method shall not provide information on the fire performance of insulating materials contained in electrical or optical cables in fire conditions other than the ones specifically used in Section 6.6 of this standard, nor shall it measure the contribution of the cables to a developing fire condition.

1.1.3* Although this test uses equipment similar to that used in NFPA 255, *Standard Method of Test of Surface Burning Characteristics of Building Materials*, and in ASTM E 84, *Standard Test Method for Surface Burning Characteristics of Building Materials*, sufficient changes have been made to the chamber so that a test conducted in the apparatus used for NFPA 255 or ASTM E 84 shall not be considered identical or productive of comparable results.

1.1.4 Because this standard does not purport to address all of the safety problems associated with its use, it shall be the responsibility of the user of this standard to establish appropriate safety and health practices and to determine the applicability of regulatory limitations prior to use.

1.2 Purpose.

1.2.1 The purpose of this test shall be to measure and record the fire and smoke characteristics of insulated, jacketed, or both, electrical wires and cables and optical fiber cables that are to be installed in ducts, plenums, and other spaces used to transport environmental air without being enclosed in raceways.

1.2.1.1 The test shall measure the flame travel distance and optical density of smoke when a specimen is exposed to the test fire.

1.2.1.2 Optional measurements shall be permitted to include heat and smoke release rates.

1.2.2 Optical density of smoke and flame travel distance shall be recorded in this test; however, there is not necessarily a relationship between these measurements.

1.3* Application.

1.3.1 This test shall be designed to provide comparative test data on insulated, jacketed, or both, electrical wires and cables and optical fiber cables that are to be installed in ducts, plenums, and other spaces used to transport environmental air without being enclosed in raceways.

1.3.2 Test data shall be used to evaluate the potential for the spread of fire along electrical cables or wires or along optical fiber cables and to evaluate the potential for the development of high smoke levels in these spaces if the wires and cables are exposed to fire.

1.3.3 This test method shall not be used to investigate circuit integrity characteristics or other such functionality performance during or after the fire test.

1.3.4 This test method shall not be used to investigate the toxicity of the products of combustion or decomposition.

1.4 Units.

1.4.1 SI Units. Metric units of measurement in this standard are in accordance with the modernized metric system known as the International System of Units (SI).

1.4.2 Primary and Equivalent Values. If a value for a measurement as given in this standard is followed by an equivalent value in other units, both values shall be regarded as complying with the requirements.

1.5 Summary of Test Method.

1.5.1 This test method shall use the apparatus described in Chapter 4 to determine flame travel distance and optical density of smoke from insulated, jacketed, or both, electrical wires and cables and optical fiber cables that are to be installed in ducts, plenums, and other spaces used to transport environmental air without being enclosed in raceways.

1.5.2 The test method shall expose a set of wire or cable specimens, 7.32 m (24 ft) long and installed on a horizontal ladder–type cable tray, to a controlled air and flaming fire exposure in a fire test chamber.

1.5.3 A special specimen holder shall be used to expose the test specimens.

1.5.4 The specimen holder shall be filled with one layer of test specimens.

1.5.5 The specimens shall be exposed to a 86 kW (294,000 Btu/hr) fire, 1.37 m (4.5 ft) long, for a period of 20 minutes, with an initial draft of 73 m/min (240 ft/min) through the chamber.

1.5.6 During the test, flame travel distance and optical density of smoke shall be measured, and peak and average optical density of smoke shall be calculated.

1.5.7 Optional measurements shall be permitted to include heat and smoke release rates from the burning sample.

Chapter 2 Referenced Publications

2.1 General. The documents or portions thereof listed in this chapter are referenced within this standard and shall be considered part of the requirements of this document.

Copyright National Fire Protection Association
Provided by IHS under license with NFPA
No reproduction or networking permitted without license from IHS
Not for Resale

2.2 NFPA Publications. National Fire Protection Association, 1 Batterymarch Park, Quincy, MA 02169-7471.

NFPA 255, *Standard Method of Test of Surface Burning Characteristics of Building Materials,* 2006 edition.

2.3 Other Publications.

2.3.1 ASTM Publications. ASTM International, 100 Barr Harbor Drive, P.O. Box C700, West Conshohocken, PA 19428-2959.

ASTM E 84*, Standard Test Method for Surface Burning Characteristics of Building Materials,* 2000.

2.3.2 Other Publications.

Merriam-Webster's Collegiate Dictionary, 11th edition, Merriam-Webster, Inc., Springfield, MA, 2003.

2.4 References for Extracts in Mandatory Sections. (Reserved)

Chapter 3 Definitions

3.1 General. The definitions contained in this chapter shall apply to the terms used in this standard. Where terms are not defined in this chapter or within another chapter, they shall be defined using their ordinarily accepted meanings within the context in which they are used. *Merriam-Webster's Collegiate Dictionary*, 11th edition, shall be the source for the ordinarily accepted meaning.

3.2 NFPA Official Definitions.

3.2.1 Shall. Indicates a mandatory requirement.

3.2.2 Should. Indicates a recommendation or that which is advised but not required.

3.2.3 Standard. A document, the main text of which contains only mandatory provisions using the word "shall" to indicate requirements and which is in a form generally suitable for mandatory reference by another standard or code or for adoption into law. Nonmandatory provisions shall be located in an appendix or annex, footnote, or fine-print note and are not to be considered a part of the requirements of a standard.

3.3 General Definitions.

3.3.1 Flame Travel Distance. Distance that the flame travels beyond the extent of the gas burner flame.

3.3.2 Optical Density of Smoke (OD). Smoke obscuration described in terms of logarithmic ratio of initial light intensity to instantaneous light intensity.

Chapter 4 Test Apparatus

4.1 Fire Test Room.

4.1.1 The fire test room in which the test chamber and smoke measurement system are located shall have provision for a free inflow of air to maintain the room at controlled pressure of 0–12 Pa (0–0.05 in. of water column) greater than ambient barometric pressure and at a temperature of 23°C ± 3°C (73°F ± 5°F) and relative humidity of 50 ± 5 percent throughout each test run.

4.1.2 The fire test room and smoke measurement area shall have controllable lighting.

4.2 Fire Test Apparatus. The fire test apparatus shall consist of the following:

(1) Air-inlet chamber
(2) Air-inlet shutter
(3) Fire test chamber
(4) Gas burner
(5) Removable top cover
(6) Exhaust transition
(7) Exhaust duct
(8) Exhaust duct velocity measurement system
(9) Smoke measurement system
(10) Exhaust duct damper

4.2.1 Air-Inlet Chamber.

4.2.1.1 The fire test chamber air-inlet transition shall consist of an L-shaped galvanized steel unit secured to the air-inlet end of the fire test chamber.

4.2.1.2 The unit shall contain a 298.5 mm ± 6 mm × 464 mm ± 6 mm (11.8 in. ± 0.25 in. × 18.25 in. ± 0.25 in.) rectangular opening to allow air to enter the fire test chamber through the chamber air-inlet shutter.

4.2.1.3 A schematic of the air-inlet chamber shall be as shown in Figure 4.2.1.3.

4.2.2 Air-Inlet Shutter.

4.2.2.1 A vertically sliding shutter, extending the entire width of the test chamber, shall be provided at the air-inlet end of the fire test chamber.

4.2.2.2 The shutter shall be positioned to provide an air-inlet opening 76 mm ± 2 mm (3 in. ± 0.08 in.) high, measured from the floor level of the test chamber and across the full width of the chamber, as shown in Figure 4.2.1.3. *[See also Figure 4.2.3.1(a).]*

4.2.3 Fire Test Chamber.

4.2.3.1 The fire test chamber shall consist of a horizontal duct of the shapes and sizes shown in Figure 4.2.3.1(a) and Figure 4.2.3.1(b).

4.2.3.2* The sides and base of the duct shall be lined with insulating masonry, consisting of refractory firebrick, as illustrated in Figure 4.2.3.1(b).

4.2.3.3* One side of the fire test chamber shall be provided with a row of two panes of 6 mm (¼ in.) thick high-temperature glass, pressure-tight observation windows, with the inside pane mounted flush with the inner wall. *[See Figure 4.2.3.1(b).]*

4.2.3.4 The exposed window area shall be 70 mm ± 6 mm × 280 mm ± 38 mm (2.75 in. ± 0.25 in. × 11 in. ± 1.5 in.).

4.2.3.5 The windows shall be located so that the gas burner and the length of the specimens being tested, from the point at which the test fire ends, can be observed from outside the fire test chamber.

4.2.3.6* The top cover support ledges shall be fabricated of a structural material capable of withstanding the abuse of continuous testing.

4.2.3.7 The ledges shall be level with respect to length and width of the chamber and with respect to each other.

Copyright National Fire Protection Association
Provided by IHS under license with NFPA
No reproduction or networking permitted without license from IHS
Not for Resale

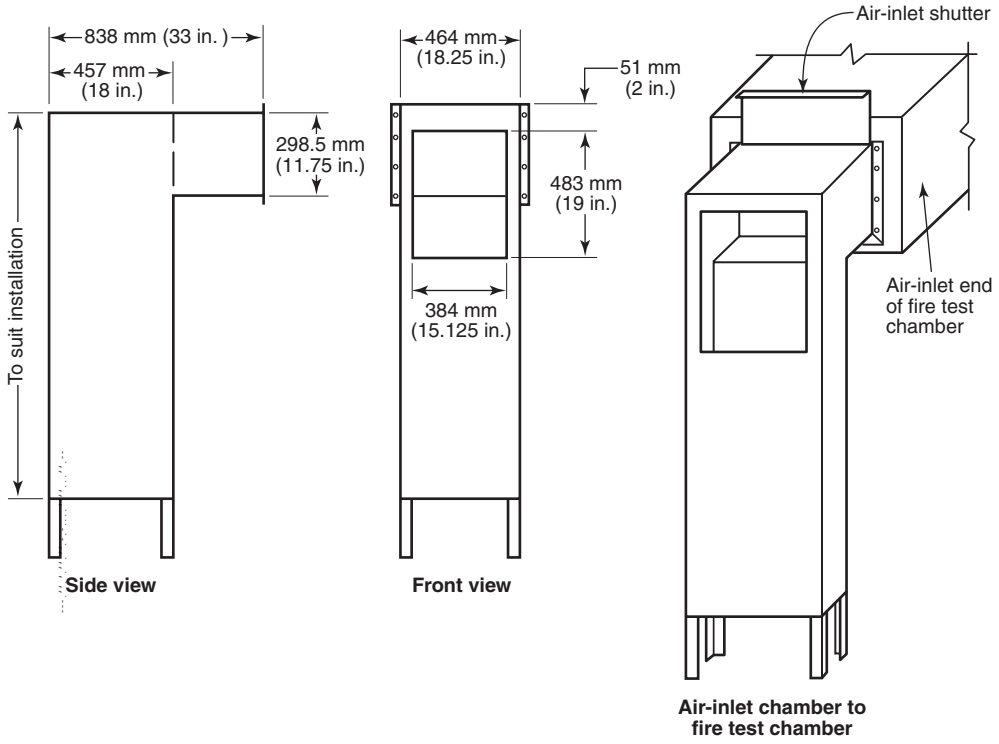

FIGURE 4.2.1.3 Schematic of the Air-Inlet Chamber.

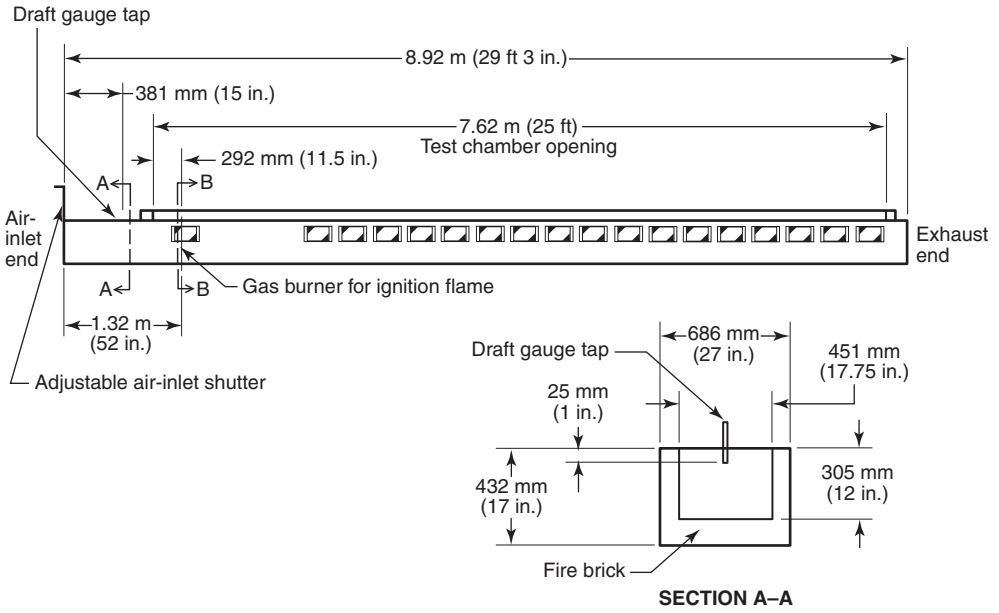

FIGURE 4.2.3.1(a) Details of Fire Test Chamber. Tolerances are contained in applicable paragraphs.

4.2.3.8 To provide air turbulence for combustion, turbulence-inducing baffles shall be provided by positioning six 229 mm long × 114.5 mm wide × 64 mm thick (9 in. long × 4.5 in. wide × 2.5 in. thick) refractory firebricks (long dimension vertical and 114.5 mm dimension parallel to the wall) along the side walls of the chamber at distances of 1.98 m ± 152 mm (6.5 ft ± 0.5 ft), 3.96 m ± 152 mm (13 ft ± 0.5 ft), and 5.79 m ± 152 mm (19 ft ± 0.5 ft) on the window side (do not obstruct the windows) and 1.37 m ± 152 mm (4.5 ft ± 0.5 ft), 2.90 m ± 152 mm (9.5 ft ± 0.5 ft), and 4.88 m ± 152 mm (16 ft ± 0.5 ft) on the opposite side, as measured from the centerline of the gas burner to the centerline of the firebricks.

Copyright National Fire Protection Association
Provided by IHS under license with NFPA
No reproduction or networking permitted without license from IHS
Not for Resale

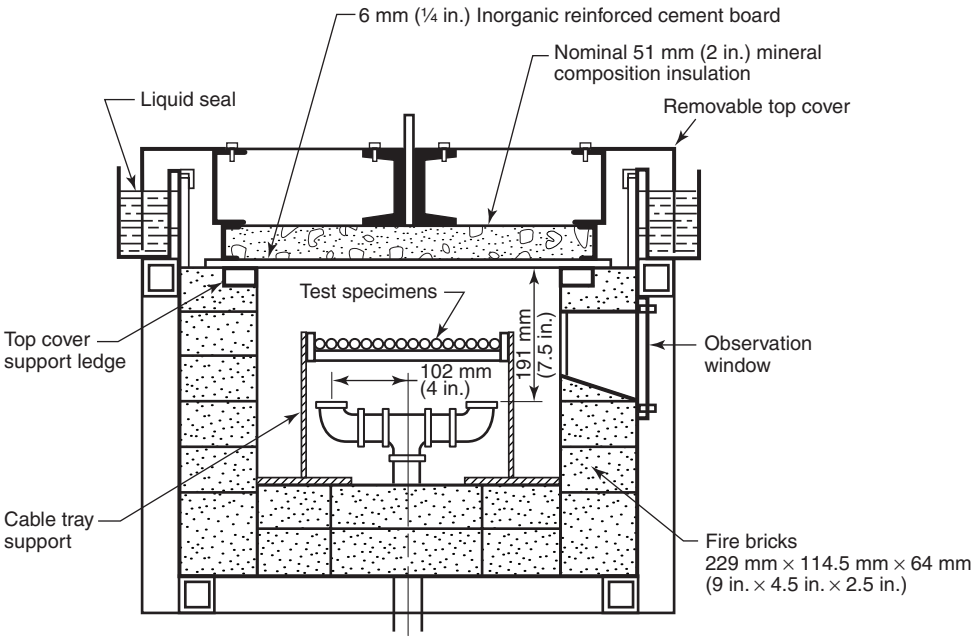

FIGURE 4.2.3.1(b) Cross-Section of the Fire Test Chamber. Tolerances are contained in applicable paragraphs.

4.2.4 Gas Burners.

4.2.4.1 Positioning.

4.2.4.1.1 One end of the test chamber, designated as the air-inlet end in Figure 4.2.3.1(a), shall be provided with a dual port gas burner, delivering flames upward, to engulf the test specimens.

4.2.4.1.2 As shown in Figure 4.2.3.1(b), the burner shall be positioned transversely to each side of the centerline of the furnace so that the flame is evenly distributed over the width of the specimens.

4.2.4.1.3 The burner shall be spaced 292 mm ± 6 mm (11.5 in. ± 0.25 in.) from the air-inlet end of the test chamber, and 191 mm ± 6 mm (7.5 in. ± 0.25 in.) below the removable top cover *[see Figure 4.2.3.1(a) and Figure 4.2.3.1(b)]*.

4.2.4.1.4 The burner shall be located 1320 mm ± 51 mm (52 in. ± 2 in.) downstream of the air-inlet shutter, as measured from the burner centerline to the outside surface of the shutter.

4.2.4.2 Burner.

4.2.4.2.1 Gas to the burner shall be provided through a single inlet pipe, distributed to each port burner through a tee-section.

4.2.4.2.2 The outlet shall be a nominal 19 mm (¾ in.) elbow.

4.2.4.2.3 The plane of the ports shall be parallel to the chamber floor, such that the gas is directed upward toward the specimen.

4.2.4.2.4 Each port shall be positioned with its centerline 102 mm ± 6 mm (4 in. ± 0.25 in.) on each side of the centerline of the fire test chamber so that the burner flame is evenly distributed *[see Figure 4.2.3.1(b)]*.

4.2.4.3 Ignition.

4.2.4.3.1 The gas burner shall be ignited remotely, using an electronic ignition system.

4.2.4.3.2 The controls used to maintain a constant flow of methane gas to the burners shall consist of the following:

(1) A pressure regulator
(2) A gas meter calibrated to read in increments of not more than 2.8 L (0.1 ft^3)
(3) A gauge to indicate gas pressure in Pa (or inches of water column)
(4) A quick-acting gas shutoff valve
(5) A gas metering valve
(6) An orifice plate in combination with a manometer to assist in maintaining uniform gas flow conditions

4.2.4.3.3 Alternative control equipment, if shown to be equivalent, shall be permitted.

4.2.5 Removable Top Cover.

4.2.5.1 The removable top cover shall consist of a metal and mineral insulation composite unit whose insulation consists of nominal 51 mm ± 6 mm (2 in. ± 0.25 in.) thick mineral composition material.

4.2.5.1.1 The top unit, shown in Figure 4.2.3.1(b), shall completely cover the fire test chamber.

4.2.5.1.2* The metal and mineral composite material shall have physical characteristics as follows:

(1) Maximum effective use temperature of not less than 650°C (1200°F)
(2) Bulk density of 335 kg/m^3 ± 20 kg/m^3 (21 lb/ft^3 ± 1.5 lb/ft^3)

Copyright National Fire Protection Association
Provided by IHS under license with NFPA
No reproduction or networking permitted without license from IHS
Not for Resale

(3) Thermal conductivity of

$$0.072 \text{ to } 0.102 \frac{W}{m \cdot K} \text{ at } 150° \text{ to } 370°C$$

$$\left(0.50 \text{ to } 0.71 \frac{Btu \cdot in.}{ft^3 \cdot hr \cdot °F} \text{ at } 300° \text{ to } 700°F \right)$$

(4) $K_\rho c$ product of

$$1 \times 10^4 \text{ to } 4 \times 10^4 \frac{W^2 \cdot sec}{m^2 \cdot k^2} \left(1 \text{ to } 4 \frac{Btu^2 \cdot in.}{ft^2 \cdot hr \cdot °F^2} \right)$$

4.2.5.2 The entire top panel unit shall be protected with flat sections of high-density [nominally 1760 kg/m^3 (110 lb/ft^3) 6 mm (0.25 in.) thick] mineral-fiber/cement board maintained in an unwarped and uncracked condition through continued replacement.

4.2.5.2.1 While in place, the top panel shall rest on a nominal 3 mm (⅛ in.) thick woven fiberglass belting, positioned on the top cover support ledges.

4.2.5.2.2 The top panel shall be completely sealed against the leakage of air into the fire test chamber during the test.

4.2.5.2.3 A water-filled trough, as shown in Figure 4.2.3.1(b), has been found suitable for this purpose.

4.2.6 Exhaust Transition.

4.2.6.1 The exhaust end of the fire test chamber shall be fitted with a transition piece.

4.2.6.1.1 The exhaust transition shall consist of a stainless steel unit composed of a 902 mm ± 6 mm long × 686 mm ± 6 mm wide × 438 mm ± 6 mm high (35.5 in. ± 0.25 in. long × 27 in. ± 0.25 in. wide × 17 in. ± 0.25 in. high) rectangular section and a 457 mm ± 6 mm (18 in. ± 0.25 in.) long rectangular-to-round transition section connected to the 406 mm ± 3 mm (16 in. ± 0.125 in.) inside diameter (I.D.) exhaust duct.

4.2.6.1.2 The outside of the transition section shall be insulated with a nominal 51 mm (2 in.) ceramic-fiber blanket [nominal density 130 kg/m^3 (8 lb/ft^3)].

4.2.6.1.3 The shape and size of the exhaust transition are shown in Figure 4.2.6.1.3.

4.2.6.2 The unit shall be secured to the exhaust end of the fire test chamber.

4.2.7 Exhaust Duct.

4.2.7.1 The 406 mm ± 3 mm (16 in. ± 0.125 in.) I.D. exhaust duct shall be constructed from stainless steel and shall extend 4.88 m to 5.49 m (16 ft to 18 ft) horizontally from the vent end of the transition to the centerline of the smoke measurement system, to provide for a fully mixed exhaust gas flow.

4.2.7.2 The exhaust duct shall extend a minimum of 8.53 m (28 ft) from the vent end of the exhaust transition section.

4.2.7.3* The exhaust duct shall be insulated with at least 51 mm (2 in.) of high-temperature mineral composition material from the beginning of the exhaust transition piece up to and including the smoke measurement system.

4.2.8 Exhaust Duct Velocity Measurement.

4.2.8.1 The velocity in the exhaust duct shall be determined by measuring the differential pressure in the flow path with a bidirectional probe connected to an electronic pressure gauge or with an equivalent measuring system and a thermocouple.

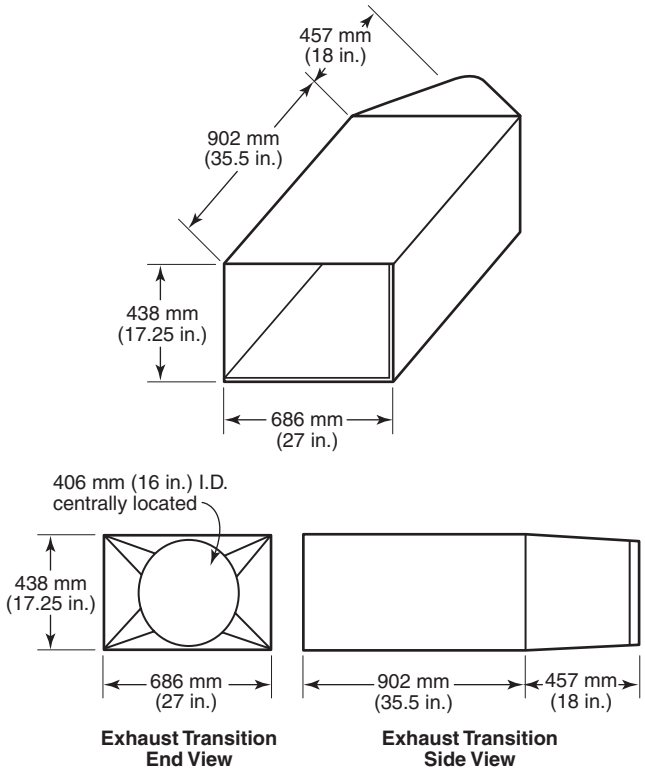

FIGURE 4.2.6.1.3 Exhaust Transition.

4.2.8.1.1 The bidirectional probe shall consist of a stainless steel cylinder with a solid diaphragm in the center that divides the probe into two chambers.

4.2.8.1.2 The probe shall be manufactured with a cylinder length nominally two times the outside diameter of the cylinder, with a minimum length of 25.4 mm (1 in.) and a maximum length of 51 mm (2 in.).

4.2.8.1.3 Pressure taps on either side of the diaphragm shall support the probe.

4.2.8.1.4 The axis of the probe shall be located at the centerline of the duct.

4.2.8.1.5 The pressure taps shall be connected to a pressure transducer having a minimum resolution of 0.25 Pa (0.001 in. of water column).

4.2.8.2 The temperature of the exhaust gas shall be measured upstream 152 mm (6 in.) from the probe and at the centerline of the duct, with a 28 AWG Type K thermocouple having an Inconel® sheath.

4.2.9 Smoke Measurement System.

4.2.9.1* A 12 V sealed-beam, clear lens, auto spot lamp shall be mounted on a horizontal section of the exhaust duct as shown in Figure 4.2.9.1.

4.2.9.2 The lamp shall be located at a point that is preceded by a straight run of round pipe at least 4.88 m (16 ft) and not greater than 5.49 m (18 ft) from the vent end of the exhaust transition section.

Copyright National Fire Protection Association
Provided by IHS under license with NFPA
No reproduction or networking permitted without license from IHS
Not for Resale

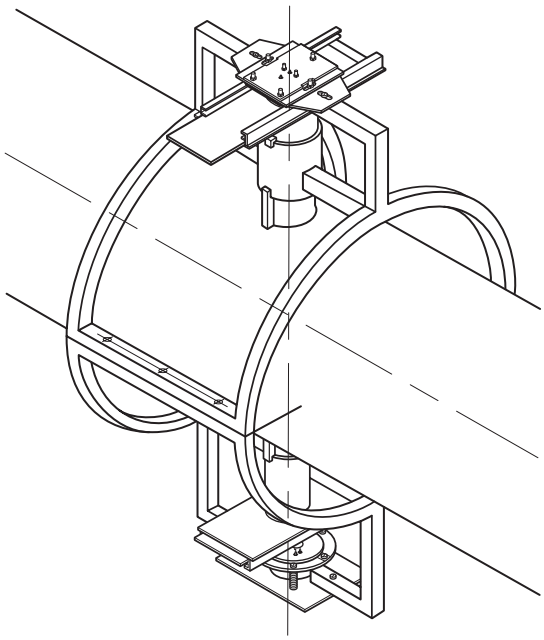

FIGURE 4.2.9.1 Smoke Measurement System.

4.2.9.3 The light beam shall be directed upward along the vertical axis of the exhaust duct.

4.2.9.4 A photoelectric cell having an output directly proportional to the amount of light received shall be mounted over the light source, with an overall light-to-cell path distance of 914 mm ± 51 mm (36 in. ± 2 in.).

4.2.9.5 The light source and photoelectric cell shall be located such that they are open to the environment of the test room.

4.2.9.6 The cylindrical light beam shall pass through 76 mm ± 3 mm (3 in. ± ⅛ in.) diameter openings at the top and bottom of the 406 mm (16 in.) I.D. duct, with the resultant light beam centered on the photoelectric cell.

4.2.9.7* The cell shall be connected to recording devices that indicate the attenuation of incident light due to particulate matter, and due to other effluents, in the passing smoke.

4.2.10 Exhaust Duct Damper.

4.2.10.1 A single-blade duct volume control damper for a 406 mm (16 in.) I.D. duct shall be positioned in the exhaust duct 1.68 m ± 0.15 m (5.5 ft ± 0.5 ft) downstream of the smoke measurement system, centerline to centerline.

4.2.10.2 The relative locations of the exhaust transition piece, exhaust duct, smoke measurement system, and exhaust duct damper shall be as shown in Figure 4.2.10.2.

4.2.10.3 To maintain airflow control throughout each test run, the exhaust duct damper shall be controlled by a closed-loop feedback system with respect to the air-inlet draft gauge static pressure.

4.2.11 Exhaust Blower.

4.2.11.1 The exhaust blower shall have the capacity to develop at least 37 Pa (0.15 in. of water column) at the draft gauge tap, with the specimens in place, with the air shutter positioned to provide an air-inlet opening of 76 mm ± 1.5 mm (3 in. ± 0.06 in.), and with the exhaust duct damper in the wide-open position. *(See 4.2.7.)*

4.2.11.2 The exhaust duct connecting the exhaust duct damper to the exhaust blower shall be 406 mm (16 in.) I.D. and shall be a straight section for a minimum of 1.83 m (6 ft) from the centerline of the exhaust duct damper.

4.2.11.3 Provisions shall be provided for an airtight expansion joint between the exhaust duct damper and the exhaust blower.

4.3 Fire Test Chamber Airflow System.

4.3.1 An air intake, fitted with a vertically sliding shutter that extends the entire width of the test chamber, shall be provided at the air-inlet end.

4.3.2 The draft plate shall be positioned to provide an air-inlet port, as shown in Figure 4.2.1.3.

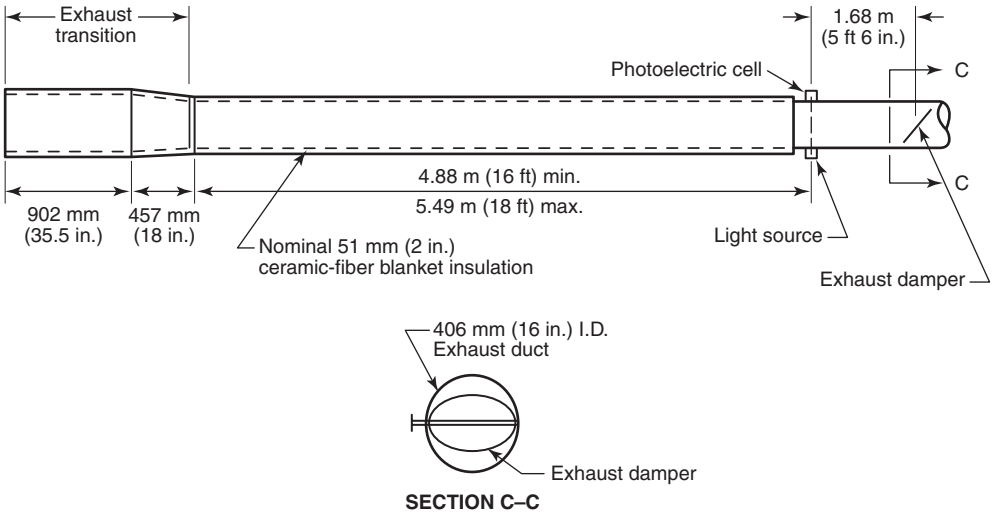

FIGURE 4.2.10.2 Location of Exhaust Transition, Exhaust Duct, Smoke Measurement System, and Damper. Tolerances are contained in applicable paragraphs.

Copyright National Fire Protection Association
Provided by IHS under license with NFPA
No reproduction or networking permitted without license from IHS
Not for Resale

4.3.3 Movement of air throughout the exhaust duct shall be by induced draft.

4.3.3.1 The draft-inducing system shall have a total draft capacity of at least 37 Pa (0.15 in. of water column) with the specimens in place, with the shutter at the air-inlet end open to its normal position, and with the exhaust damper in the wide-open position. *(See Section C–C in Figure 4.2.10.2.)*

4.3.3.2 A draft-gauge manometer to indicate static pressure shall be inserted through the top at the mid-width of the tunnel, 25.4 mm ± 13 mm (1 in. ± 0.5 in.) below the ceiling, and 381 mm ± 13 mm (15 in. ± 0.5 in.) downstream of the air intake shutter, as shown in Section A–A of Figure 4.2.3.1(a).

4.4 Ladder Cable Tray.

4.4.1 The ladder-type cable tray used to support the open-cable test specimens or the cables-in-raceway test specimens is shown in Figure 4.4.1.

4.4.2 The tray shall be fabricated from cold-rolled steel of 350 MPa (50,000 psi) minimum tensile strength.

4.4.3 The solid bar stock side rails shall be 38 mm ± 3 mm × 9.5 mm ± 3 mm (1.5 in. ± 0.125 in. × 0.375 in. ± 0.125 in.), as shown in Figure 4.4.1.

4.4.4 The C-shaped channel rungs shall be structural channels 13 mm ± 3 mm × 25.4 mm ± 3 mm × 3 mm ± 1.5 mm (0.5 in. ± 0.125 in. × 1 in. ± 0.125 in. × 0.125 in. ± 0.06 in.), as shown in Section A–A in Figure 4.4.1.

4.4.4.1 Each rung shall be 286 mm ± 3 mm (11.25 in. ± 0.125 in.) long.

4.4.4.2 The rungs shall be welded to the side rails 229 mm ± 3 mm (9 in. ± 0.125 in.) on centers along the tray length.

4.4.5 The tray shall consist of one or more sections having a total assembled length of 7.32 m ± 51 mm (24 ft ± 2 in.) and shall be supported with a total of 16 supports spaced along the length of the tray.

4.4.6 The tray supports, as shown in Figure 4.4.1, shall be fabricated from bar steel.

4.5 Fire Test Chamber Temperature Measurement Instruments.

4.5.1 At the Floor.

4.5.1.1 A 19 AWG chromel–alumel thermocouple, with 9.5 mm ± 3 mm (0.375 in. ± 0.125 in.) of the junction exposed in the fire chamber air, shall be inserted through the floor of the test chamber.

4.5.1.2 The tip of the thermocouple shall be 25.4 mm ± 3 mm (1 in. ± 0.125 in.) below the top surface of the glass fiber belting, 7.01 m ± 13 mm (23 ft ± 0.5 in.) from the centerline of the burner, and at the center of the width of the chamber.

4.5.2 Below the Floor. A 19 AWG chromel–alumel thermocouple, embedded 3.2 mm ± 1.5 mm (0.125 in. ± 0.06 in.) below the floor surface of the test chamber, shall be mounted in refractory or portland cement (carefully dried to keep it from cracking) at distances of 3.96 m ± 13 mm and 7.09 m ± 13 mm (13 ft ± 0.5 in. and 23.25 ft ± 0.5 in.) from the centerline of the burner and at the center of the width of the chamber.

4.6 Data Acquisition Equipment.

4.6.1 A digital data acquisition system shall be used to collect and record light attenuation, temperature, flame spread, and velocity measurements.

4.6.1.1 The data system shall be capable of collecting the data at intervals of 2 seconds.

4.6.1.2 The data acquisition system shall have an accuracy corresponding to at least ± 0.5°C (2°F) for the temperature channels and 0.01 percent of full-scale instrument output for all other instrument channels.

4.6.2 A smoothing routine shall not be used to process the data.

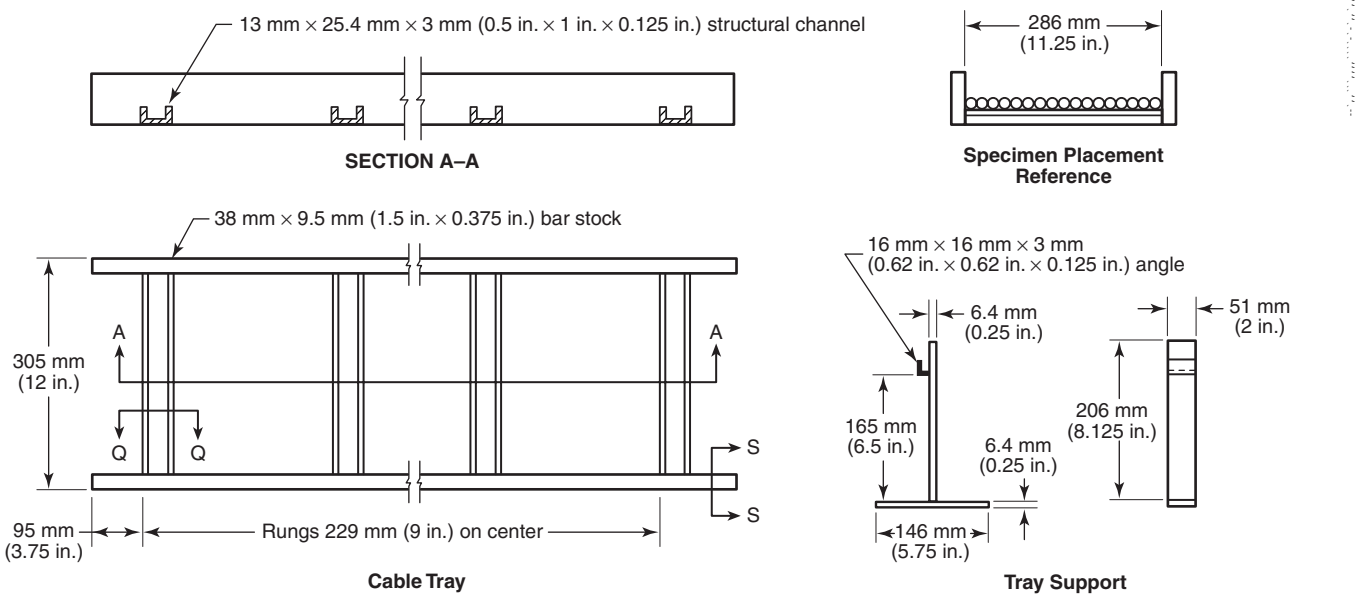

FIGURE 4.4.1 Details of Ladder Cable Tray Supports. Tolerances are contained in applicable paragraphs.

Copyright National Fire Protection Association
Provided by IHS under license with NFPA
No reproduction or networking permitted without license from IHS
Not for Resale

Chapter 5 Test Specimens

5.1 Specimens. Test specimens shall consist of 7.32 m ± 152 mm (24 ft ± 6 in.) lengths of cables installed in a single layer across the bottom of the cable tray, as shown in Figure 4.2.3.1(b).

Chapter 6 Maintenance and Calibration of Test Equipment

6.1 Maintenance. Maintenance for the apparatus shall be conducted routinely every 30 days and shall include the following procedures (with replacement of components as necessary):

(1) Inspection of tunnel and wall bricks
(2) Inspection of windows
(3) Inspection of the inorganic cement board
(4) Inspection of the castable block mix

6.2 Frequency of Calibration. The test apparatus shall be calibrated, as described in Section 6.3 through Section 6.6, at a minimum of one-month intervals.

6.3 Airflow.

6.3.1 Material.

6.3.1.1 A 610 mm ± 3 mm × 356 mm ± 3 mm × 1.5 mm ± 1 mm (24 in. ± 0.125 in. × 14 in. ± 0.125 in. × 0.06 in. ± 0.03 in.) steel plate shall be placed on the top cover support ledges at the air-inlet end of the fire test chamber, over the gas burner.

6.3.1.2 Then three 2.44 m ± 13 mm × 610 mm ± 13 mm × 6 mm ± 3 mm (8 ft ± 0.5 in. × 2 ft ± 0.5 in. × 0.25 in. ± 0.125 in.) mineral-fiber/cement boards shall be placed to fill the remaining length of the fire test chamber, placed end-to-end on the ledge of the furnace chamber, as shown in Figure 4.2.3.1(b).

6.3.1.3 The material for the board shall be as defined in 4.2.5.2.

6.3.1.4 The removable top of the test chamber shall then be placed in position.

6.3.2 Air.

6.3.2.1 The air supply shall be maintained at 23°C ± 3°C (73°F ± 5°F).

6.3.2.2 Relative humidity shall be kept at 50 percent ± 5 percent during the test.

6.3.3 Air Leakage Test.

6.3.3.1* The draft shall be established to produce a static pressure 37 Pa (0.15 in. of water column) reading on the draft manometer with the following conditions:

(1) Board in position and removable top in place
(2) Air-inlet end shutter open 76 mm ± 2 mm (3 in. ± 0.06 in.)
(3) Exhaust damper manually adjusted

6.3.3.2 The air-inlet end shutter shall then be closed and sealed.

6.3.3.3 The manometer reading shall be increased to at least a 93 Pa (0.375 in. of water column), which indicates that no excessive air leakage exists.

6.3.3.4 The static pressure reading obtained shall be recorded.

6.3.4 Supplemental Air Leakage Test.

6.3.4.1 A supplemental air leakage test shall be conducted by activating a smoke bomb in the fire chamber while the air-inlet shutter and exhaust duct beyond the differential manometer tube are sealed.

6.3.4.2 The bomb shall be ignited, and the chamber pressurized to 6.2 Pa (0.025 in. of water column).

6.3.4.3 All points of leakage observed in the form of escaping smoke particles shall be sealed.

6.3.5 Velocity Traverse Test.

6.3.5.1* An air-inlet static pressure at the draft gauge tap shall be established to obtain the specified air velocity.

6.3.5.2 The required draft-gauge reading shall be maintained throughout the test by regulating the controlled exhaust damper.

6.3.5.3 Air Velocity.

6.3.5.3.1 The air velocity at seven points, each located 7 m ± 3 mm (23 ft ± 1 in.) from the centerline of the gas burner and 152 mm ± 6 mm (6 in. ± 0.25 in.) below the plane of the top cover support ledges, shall be recorded.

6.3.5.3.2 These seven points shall be determined by dividing the width of the tunnel into seven equal sections and recording the velocity at the geometric center of each section.

6.3.5.4 Measurement.

6.3.5.4.1 During the measurement of velocity, the turbulence blocks shall be removed and the leading edge of the straightening vanes, 610 mm ± 3 mm × 305 mm ± 3 mm (24 in. ± 0.125 in. × 12 in. ± 0.125 in.), shall be placed 4.88 m (16 ft) from the centerline of the burner.

6.3.5.4.2 The straightening vanes shall divide the chamber cross-section into nine uniform vertical sections.

6.3.5.4.3 The average velocity shall be 1.22 m/sec ± 0.025 m/sec (4 ft/sec ± 0.083 ft/sec), as determined using a bidirectional probe.

6.3.5.4.4 If deviation exists, the exhaust damper position shall be adjusted to obtain a velocity of 1.22 m/sec ± 0.025 m/sec (4 ft/sec ± 0.083 ft/sec).

6.3.5.4.5 The air-inlet static pressure shall be recorded.

6.3.5.4.6 Following calibration, this pressure shall be maintained to within ±5 percent for all testing.

6.4 Smoke Measurement System Calibration Test.

6.4.1* With the light source voltage established at a minimum of 8 V and the photoelectric cell voltage established at a minimum of 30 mV (clear beam), the system shall be calibrated using 10 neutral density filters with values of 0.1, 0.2, 0.3, 0.4, 0.5, 0.6, 0.7, 0.8, 0.9, and 1.0.

6.4.2 Each filter shall be positioned in front of the photoelectric cell to cover the entire width of the light path.

6.4.3 The light obscuration using the neutral density filters shall be used to calculate the optical density of smoke as follows:

$$OD = \log_{10} \frac{I_0}{I}$$

where:
OD = optical density
I_0 = clear beam photo detector signal
I = photo detector signal with the neutral density filter

Copyright National Fire Protection Association
Provided by IHS under license with NFPA
No reproduction or networking permitted without license from IHS
Not for Resale

6.4.3.1 The calculated values of *OD* for each filter shall be plotted on the *x*-axis, with the corresponding neutral density value on the *y*-axis.

6.4.3.2 The slope of a best-fit line shall be determined using least-squares error technique. The slope of the best-fit line shall be 1 ± 0.2.

6.4.3.3 The coefficient of regression, r^2, shall be greater than 0.99.

6.4.3.4 Following calibration, all subsequent *OD* calculations shall be corrected, using the slope of the line obtained.

6.4.3.5 If deviation exists outside the required tolerances, the light source voltage and photoelectric cell resistance shall be adjusted.

6.4.3.6 Adjustments shall be quantified by recalibration.

6.5 Fuel.

6.5.1* The test fire, which produces 86 kW ± 2 kW (294,000 Btu/hr ± 7300 Btu/hr), shall be fueled with bottled methane gas of a minimum 98 percent purity and with a high heating value of 37 MJ/m^3 ± 0.5 MJ/m^3 (1000 Btu/ft^3 ± 15 Btu/ft^3), determined using a gas calorimeter or as documented by the fuel supplier.

6.5.1.1 The gas supply shall be adjusted initially to 86 kW ± 2 kW (294,000 ± 7300 Btu/hr).

6.5.1.2 The gas pressure, the pressure differential across the orifice plate, and the volume of gas used shall be recorded in each test.

6.5.2 Flow Compensation.

6.5.2.1 A length of coiled copper tubing shall be inserted into the gas line between the supply and the metering connection to compensate for possible errors in the indicated flow because of reductions in the gas temperature associated with the pressure drop and expansion across the regulator.

6.5.2.2 Other applicable means of correction shall be permitted to be used, provided equivalence has been demonstrated by reaching the appropriate fuel levels.

6.5.3 With the draft and the gas supplies adjusted, as indicated in 6.3.5 and in this subsection, the test flame shall extend downstream to a distance of 1.37 m (4.5 ft) over the specimens, with negligible upstream coverage.

6.6 Reinforced Inorganic Cement Board Test.

6.6.1 Fire Test Chamber Preheat.

6.6.1.1* The fire test chamber shall be preheated with the steel plate described in 6.3.1.1 and one layer of nominally 6 mm thick × 2.44 m long (¼ in. × 8 ft) mineral-fiber/cement board, wide enough to be placed on the ledge of the furnace chamber as shown in Figure 4.2.3.1(b), with the material for the board as defined in 4.2.5.2, and with the removable top in place.

6.6.1.2 The fuel supply, methane or natural gas, shall be adjusted to the required flow as described in Section 6.5, with the air-inlet shutter providing an opening of 76 mm ± 1.5 mm (3 in. ± 0.06 in.).

6.6.2 Preheating shall be continued until the temperature indicated by the floor thermocouple at 7.09 m ± 13 mm (23.25 ft ± 0.5 in.) reaches 66°C ± 3°C (150°F ± 5°F).

6.6.3 The fire test chamber shall be allowed to cool until the floor thermocouple at 3.96 m (13 ft) shows a temperature of 41°C ± 3°C (105°F ± 5°F).

6.6.4 Test Flame.

6.6.4.1 The steel plate, three 2.44 m (8 ft) long mineral-fiber/cement boards, and the removable top shall be placed as in 6.6.1.

6.6.4.2 The fuel supply, methane gas, shall be adjusted to the required flow as described in Section 6.5, with the air-inlet shutter providing an opening of 76 mm ± 1.5 mm (3 in. ± 0.06 in), for a test period of 10 minutes.

6.6.4.3 The temperatures indicated by the thermocouple in the fire test chamber air at 7.01 m (23 ft) shall be recorded at a maximum of 15-second intervals.

6.6.4.4 With the draft and the gas supplies adjusted, as indicated in 6.3.5 and in this paragraph, the test flame shall extend downstream to a distance of 1.37 m (4.5 ft) over the specimens, with negligible upstream coverage.

6.6.5 Temperature History.

6.6.5.1 The temperature history of the thermocouple in the chamber air at 7.01 m (23 ft) shall be compared to the temperature history taken at the same intervals from the representative curve of temperature as a function of time shown in Figure 6.6.5.1.

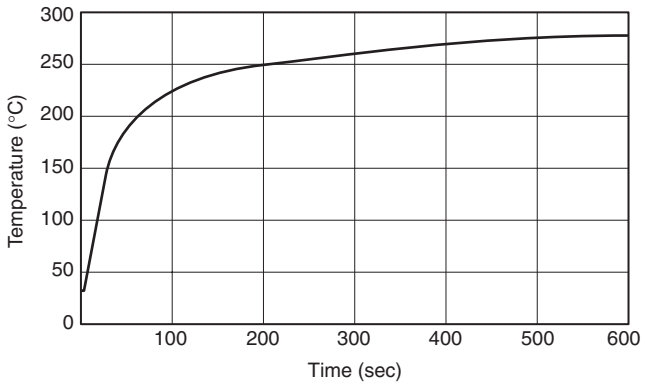

FIGURE 6.6.5.1 Representative Preheat Curve.

6.6.5.2 When variation from the temperatures shown in the representative preheat curve exceeds the standard deviation shown in Figure 6.6.5.1 for any recorded value, because of variations in the characteristics of the gas used, adjustments shall be made and the test conducted again prior to proceeding.

6.6.5.3 Following any adjustments, the established fuel flow rate shall be recorded and maintained to within ±2 percent from test to test for all subsequent testing.

6.6.5.4 The maximum temperature shall be 267°C ± 5.5°C (542°F ± 10°F).

6.7 Standard Insulated Conductor Test.

6.7.1 A verification procedure shall utilize reference cable with known characteristics of flame travel distance, average optical density, and peak optical density.

Copyright National Fire Protection Association
Provided by IHS under license with NFPA
No reproduction or networking permitted without license from IHS
Not for Resale

6.7.1.1* The reference cable (hereinafter identified as "910ST reference cable") shall be a cable-like structure composed of a colored thermoplastic material extruded over a central support member.

6.7.1.2 The outside diameter of the cable shall be 5.72 mm (0.225 in.). The central support member is composed of an annealed copper conductor with an outside diameter of 2.06 mm (0.081 in.).

6.7.1.3 The thermoplastic coating material used for the cable shall contain the component materials shown in Table 6.7.1.3.

Table 6.7.1.3 Composition of Cable Coating: Thermoplastic Component Material

Component Materials	Copolymer Composition (weight)	Thermoplastic Composition	Thermoplastic Composition (weight %)
Poly(vinylidene fluoride) (PVDF)	80	79.81	77.48
Polychlorotri-fluoroethylene CTFE	20	19.95	19.37
Polyethylene (PE)	0.24	0.24	0.23
Colorant		3	2.91

6.7.1.4 The thermoplastic cable coating material identified in Table 6.7.1.3 shall be modified by the addition of a titanium dioxide–based colorant, at an addition level of 3 parts (by weight, also known as pphr or parts per hundred resin) of colorant to 100 parts (by weight) of the copolymer.

6.7.1.5 The composition of some key active ingredients of the colorant shall be as shown in Table 6.7.1.5(a), and the composition of the copolymer contained within the colorant shall be as shown in Table 6.7.1.5(b).

Table 6.7.1.5(a) Composition of Colorant in Cable Coating Thermoplastic in Table 6.7.1.3

Component Material	Colorant Composition (%)
Poly(vinylidene fluoride)/ Polyhexafluoropropylene (PVDF/HFP)	6.2
Caprolactone	3
Titanium dioxide	10
Zinc sulfide	25
Unknown	55.8

6.7.1.6 The 910ST reference cable shall be tested with the same procedure as described in Chapter 8 to determine flame travel distance, average optical density of smoke, and peak optical density of smoke. The results shall be as shown in 6.7.2.

6.7.2 The results of the flame travel distance, average optical density of smoke, and peak optical density of smoke of the 910ST reference cable shall be as shown in Table 6.7.2 (within the tolerances indicated by the standard deviation).

Table 6.7.1.5(b) Composition of Copolymer in Colorant in Table 6.7.1.5(a)

Component Material	Material Composition (weight)	Material Composition (%)
PVDF	90	89.78
HFP	10	9.98
Calcium molybdate	0.24	0.24

Table 6.7.2 Results of Fire Properties of 910 ST Reference Cable

Properties	Property		Standard Deviation	
	m	ft	m	ft
Maximum flame travel distance	0.6	2	0.15	0.5
Average optical density of smoke	0.12	0.4	07	0.23
Peak optical density of smoke	0.31	1	0.02	0.07

Chapter 7 Test Specimen Preparation

7.1 Specimen Conditioning.

7.1.1 Prior to testing, all cable specimens shall be conditioned in a controlled environment for a minimum of 24 hours, at a temperature of 23°C ± 3°C (73°F ± 5°F) and a relative humidity of 50 percent ± 5 percent.

7.1.2 Samples that are supplied on reels shall have any wrapping removed and boxes opened for conditioning.

7.2 Determination of Specimen Diameter.

7.2.1 The specimen diameter shall be determined using either a diameter tape, a vernier caliper, or a micrometer with an accuracy of 0.025 mm (0.001 in.).

7.2.2 The diameter tape shall be appropriate for specimens that are uniformly round.

7.2.2.1 The tape shall be wrapped tightly around the specimen, but not so tightly that the specimen is compressed.

7.2.2.2 An arithmetic average of three readings over a 0.3 m (1 ft) length of the specimen shall be used as the specimen diameter.

7.2.3 The vernier caliper shall be permitted to be used for all sizes of cable specimens and shall be considered for small-diameter cables that are nonuniform in cross-section.

7.2.4 If the sample is round, the caliper shall be closed gently around the cable, carefully so as not to compress it, and the reading shall be taken.

7.2.4.1 The measurement shall be repeated a minimum of five times over a length of 0.3 m (1 ft) of cable.

Copyright National Fire Protection Association
Provided by IHS under license with NFPA
No reproduction or networking permitted without license from IHS
Not for Resale

7.2.4.2 The arithmetic average of the five readings shall be used as the cable specimen diameter.

7.2.5 Nonuniform Specimen.

7.2.5.1 If the specimen is nonuniform in cross-section, with the width-to-thickness ratio less than 2:1, three measurements shall be taken at wide points, and three measurements shall be taken at the narrow points of the sample.

7.2.5.2 The arithmetic average of the six readings shall be used as the specimen diameter.

7.2.6 If the width-to-thickness ratio is greater than 2:1, then the width of the specimen shall be used as the specimen diameter.

7.2.6.1 The width of the specimen shall be measured at six locations on a 0.3 m (1 ft) length of the cable.

7.2.6.2 The arithmetic average of the six readings shall be used as the specimen diameter.

7.2.7 The micrometer shall be permitted to be used for a cable specimen with a uniform cross-section.

7.2.7.1 Five measurements of the specimen diameter over a 0.3 m (1 ft) length of the cable shall be taken.

7.2.7.2 The arithmetic average of the five readings shall be used as the specimen diameter.

7.3 Number of Cable Lengths. The number of cable lengths used in the test shall be calculated as follows:

(1) The number of cable lengths shall equal 286 mm (11.25 in.) (width of the cable tray) divided by the diameter of specimen in millimeters (inches).
(2) The number of cable specimens shall equal the measured inside width of the rack divided by the cable diameter as determined using a diameter tape or equivalent *(see Section 7.2)*. The result of the division shall be rounded off to the nearest lower whole number of specimens that fit in the tray, with consideration for the presence of cable fasteners.

7.4 Cable Mounting.

7.4.1 The specimens shall be laid into the tray in parallel, straight rows without any space between adjacent specimens other than those needed for the cable fasteners described in 7.4.2.

7.4.2 Bare copper tie wires not greater than a wire cross-section of 1620 circular mils or 0.823 mm^2 (18 AWG) shall be used to fasten cable specimens to the rungs of the cable tray at two positions—that is, wires shall be tied to the first rung near the air-inlet end and to the last rung near the exhaust end.

Chapter 8 Test Procedure

8.1 Procedure. A test procedure shall be followed as described in 8.1.1 through 8.1.12.

8.1.1 At the start of each test day, the furnace shall be preheated as described in 6.6.1 and 6.6.2.

8.1.2 The furnace shall be cooled as described in 6.6.3.

8.1.3 The cable tray and supports shall be placed in the test chamber as shown in Figure 4.2.3.1(b) and described in Section 4.4, with the tray end at the air-inlet end and not more than 25 mm (1 in.) downstream from the centerline of the burners.

8.1.4 The cable specimens shall be installed as described in Section 7.4.

8.1.4.1 If a single cable tray is used, cable specimens shall be permitted to be installed prior to placement of cable tray in chamber.

8.1.5 The steel plate shall be placed in the fire test chamber, as described in 6.3.1.1.

8.1.5.1 One 6 mm × 1.22 m × 0.61 m (0.25 m × 4 ft × 2 ft) section of mineral-fiber/cement board shall be placed on the top cover support ledges of the furnace chamber, to overlap the steel plate a maximum of 76 mm (3 in.), as shown in Figure 4.2.3.1(b) at the fire end.

8.1.5.2 The removable test chamber top, protected by a full mineral-fiber/cement board, shall be placed in position on top of the furnace side ledge.

8.1.6 The air-inlet shutter shall be placed in position to provide an opening of 76 mm ± 1.5 mm (3 in. ± 0.06 in.).

8.1.6.1 To maintain airflow control throughout each test run, the exhaust duct damper shall be controlled by a closed-loop feedback system with respect to the air-inlet draft gauge static pressure.

8.1.6.2 Throughout the test, the air supply shall be maintained at a temperature of 23°C ± 3°C (73°F ± 5°F) and a relative humidity of 50 percent ± 5 percent.

8.1.6.3 Test room pressure shall be maintained at 0–12 Pa (0–0.05 in. of water column) greater than ambient barometric pressure.

8.1.7 The smoke measurement system shall be checked to ensure zero optical density.

8.1.8 The fire test chamber temperature at the floor thermocouple at 3.96 m (13 ft) shall be checked to ensure that it is at a temperature of 41°C ± 3°C (105°F ± 5°F).

8.1.8.1 If the temperature is below the range in 8.1.8, the cable test specimens shall be removed and the fire test chamber shall be preheated as described in 6.6.1 and 6.6.2.

8.1.8.2 The furnace shall then be allowed to cool until the floor thermocouple at 3.96 m (13 ft) registers a temperature of 41°C ± 3°C (105°F ± 5°F).

8.1.8.3 If the chamber has been cooled down and reheated, the cable test specimens shall be installed as described in Section 7.4.

8.1.9 The exhaust shall be adjusted to establish the airflow requirements of 6.3.5 in the test chamber.

8.1.9.1 The initial photoelectric cell output shall be recorded.

8.1.10 The test gas flame shall be ignited (as per Section 6.6), and the data acquisition system shall be started simultaneously.

8.1.10.1 The distance and time of maximum flame travel distance shall be observed and recorded.

8.1.10.2 The photoelectric cell output, the gas pressure, the pressure differential across the orifice plate, and the volume

Copyright National Fire Protection Association
Provided by IHS under license with NFPA
No reproduction or networking permitted without license from IHS
Not for Resale

of gas used shall be recorded at intervals of 2 seconds continuously throughout the test.

8.1.11 The test shall be continued for 20 minutes.

8.1.11.1 The test shall be terminated by shutting off the fuel supply and stopping data acquisition.

8.1.12 After the gas supply to the ignition flame is shut off, smoldering and other conditions within the furnace shall be observed and recorded, and the specimens shall then be removed for examination.

8.2 Exhaust Duct Velocity Measurement Calculations.

8.2.1 Linear velocity in the duct shall be calculated as follows:

$$V = k\sqrt{\Delta PT}$$

where:
V = linear duct velocity (m/sec)
k = constant for the bidirectional probe [m/sec $(Pa^{-0.5})$ $(K^{-0.5})$]
ΔP = pressure difference recorded across the bidirectional probe (Pa)
T = airflow temperature (K)

8.2.2 The constant k is determined experimentally by calibrating the bidirectional probe with a standard flow measuring device.

Chapter 9 Post-Test Cleanup and Inspection

9.1 Debris. All debris from the furnace shall be removed.

9.1.1 Any molten debris that is stuck to the brick and cannot be removed physically shall be destroyed by placing scrap lumber in the chamber, placing the removable top cover in position, and igniting the lumber with the burner until all the molten debris is consumed.

9.1.2 All char and ash shall be removed from the fire test chamber.

9.1.3 An alternative method of removing any molten debris shall be to replace the affected bricks on the chamber floor.

9.2* Windows. The windows shall be cleaned after each test.

9.3* Supports. The ladder and supports shall be cleaned of debris.

9.4 Damaged Boards.

9.4.1 The damaged mineral-fiber/cement board protecting the removable top cover shall be replaced after each test.

9.4.2 The 6 mm × 1.22 m × 0.61 m (0.25 in. × 4 ft × 2 ft) section of mineral-fiber/cement board placed on the top cover support ledges shall be discarded after each test.

9.5 Preparation for Next Test. Cleaned trays and supports shall be placed in the fire test chamber, and the removable top cover shall be positioned above the top cover support ledges.

9.6 Cleanliness of Smoke Measurement System. The smoke measurement system shall be cleaned, and 100 percent light transmission shall be confirmed.

Chapter 10 Calculations

10.1 Optical Density of Smoke.

10.1.1 The smoke obscuration shall be calculated as optical density of smoke from the photoelectric cell data as follows:

$$OD = \log_{10}\frac{I_0}{I}$$

10.1.2 The peak optical density shall be the maximum optical density as determined by using a three-point running average of optical density values recorded during the test.

10.1.3 The average optical density (OD_{av}) shall be calculated as follows:

$$OD_{av} = \frac{\Delta t\sum_{i=1}^{N-1} 0.5\left(OD_i + OD_i\right)}{1200}$$

where:
Δt = scan time (seconds)
N = number of data points
i = data point counter
OD_i = optical density value at each scan from $i = 1$ to $i = N - 1$
1200 = test time in seconds (20 minutes)

10.1.4 The individual optical density of smoke values used in the equation shall be the values measured at each individual scan.

10.2 Exhaust Duct Velocity Measurement Calculations.

10.2.1 Linear velocity in the duct shall be calculated as follows:

$$V = k\sqrt{\Delta PT}$$

where:
V = linear duct velocity (m/sec)
k = constant for the bidirectional probe [m/sec $(Pa^{-0.5})$ $(K^{-0.5})$]
ΔP = pressure difference recorded across the bidirectional probe (Pa)
T = airflow temperature (K)

10.2.2 The constant k is determined experimentally by calibrating the bidirectional probe with a standard flow measuring device.

Chapter 11 Report

11.1 Data. The report shall include the following information for each test:

(1) A detailed description of the wires or cables tested
(2) The number of lengths used as specimens for the test
(3) The maximum flame travel distance in meters (feet)
(4) The graph of flame travel distance versus time for the duration of the test
(5) The values of the peak optical density of smoke and average optical density of smoke
(6) The graph of the optical density of the smoke generated during the test versus time for the duration of the test
(7) Observations of the condition of the test specimens after completion of the test
(8) All other information required to be recorded

Copyright National Fire Protection Association
Provided by IHS under license with NFPA
No reproduction or networking permitted without license from IHS
Not for Resale

Chapter 12 Precision and Bias

12.1 Applicability. The precision and bias of this test method has not been determined.

Annex A Explanatory Material

Annex A is not a part of the requirements of this NFPA document but is included for informational purposes only. This annex contains explanatory material, numbered to correspond with the applicable text paragraphs.

A.1.1.1 This standard is referenced, including requirements for flame travel distance, peak optical density of smoke, and average optical density of smoke, in 770.179(A) and 820.179(A) of the 2005 edition of NFPA 70, *National Electrical Code*. Wires and cables with a flame travel distance not exceeding 1.52 m (5 ft), a peak optical density of smoke not exceeding 0.5, and an average optical density not exceeding 0.15 are described as having adequate fire-resistant and low smoke-producing characteristics. It should be noted that the fire resistance described in NFPA 70 does not address the same issues that are addressed when testing by use of a temperature–time curve, such as described in NFPA 251, *Standard Methods of Tests of Fire Resistance of Building Construction and Materials*. Procedures for testing fire-resistive cables are described in UL 2196, *Standard for Tests of Fire Resistive Cables*.

A.1.1.3 The changes made in equipment for this test were deemed necessary in order to obtain proper precision from the test when the equipment is used for small quantities of wire and cable, which produce much smaller quantities of heat release and smoke obscuration.

A.1.3 It has been shown that results from this test method rank wires and cables in the same way as do the results of tests on wiring exposed to fires in simulated plenums.

A.4.2.3.2 The operation and calibration of this equipment is based on the use of insulating firebrick. The physical and thermal properties of the brick are as follows:

(1) Density: 0.82 g/cm^3 (51 lb/ft^3)
(2) Specific heat: 0.25 Btu/lb · °C (1.05 kJ/kg · °F)
(3) Thermal conductivity:

(a) $0.26\frac{W}{m\cdot°C}$ at 205°C $\left(1.8\frac{Btu\cdot in.}{ft^3\cdot hr\cdot °F}\text{ at }400°F\right)$

(b) $0.30\frac{W}{m\cdot°C}$ at 425°C $\left(2.1\frac{Btu\cdot in.}{ft^3\cdot hr\cdot °F}\text{ at }800°F\right)$

(c) $0.33\frac{W}{m\cdot°C}$ at 655°C $\left(2.3\frac{Btu\cdot in.}{ft^3\cdot hr\cdot °F}\text{ at }1200°F\right)$

(d) $0.36\frac{W}{m\cdot°C}$ at 870°C $\left(2.5\frac{Btu\cdot in.}{ft^3\cdot hr\cdot °F}\text{ at }1600°F\right)$

(e) $0.39\frac{W}{m\cdot°C}$ at 1095°C $\left(2.7\frac{Btu\cdot in.}{ft^3\cdot hr\cdot °F}\text{ at }2000°F\right)$

A.4.2.3.3 A high-temperature glass acceptable for the inside glass panes should contain 96 percent silica and 3 percent boric oxide (B_2O_3). The glass should have thermal conductivity as follows:

(1) $\frac{1.00\times10^{-4}W}{m\cdot°C}$ at $-100°C$ $\left(6.9\frac{Btu\times10^{-4}in.}{ft^3\cdot°F}\text{at }-148°F\right)$

(2) $\frac{1.26\times10^{-4}W}{m\cdot°C}$ at 0°C $\left(8.7\frac{Btu\times10^{-4}in.}{ft^3\cdot°F}\text{at }32°F\right)$

(3) $\frac{1.42\times10^{-4}W}{m\cdot°C}$ at 100°C $\left(9.8\frac{Btu\times10^{-4}in.}{ft^3\cdot°F}\text{at }212°F\right)$

The glass should have a nominal thickness of 6 mm (0.25 in.) and should withstand temperatures up to 900°C (1652°F).

The following product information is provided for informational purposes only and has not been independently verified, certified, or endorsed by NFPA or any of its technical committees. Vycor® glass — available from Fisher Scientific International, Inc., Liberty Lane, Hampton, NH 03842, (603) 926–5911 — or its equivalent, has been shown to be suitable for this purpose.

A.4.2.3.6 Materials acceptable for this purpose should be suitable for very high temperatures. Examples include water-cooled structural-steel tubing and high-temperature furnace refractories, for example, those based on zirconium materials (such as Zicron®). This product information is being provided for informational purposes only and has not been independently verified, certified, or endorsed by NFPA or any of its technical committees.

A.4.2.5.1.2 $K_p c$ is equal to the thermal conductivity times the density times the specific heat.

A.4.2.7.3 The high-temperature mineral composition material should have the same physical characteristics as the material described in 4.2.5.1.

A.4.2.9.1 The following product information is provided for informational purposes only and has not been independently verified, certified, or endorsed by NFPA or any of its technical committees:

(1) *Lamp*. General Electric Model 4405, 12 V sealed-clear auto spot lamp (Part Number 4405), has been found acceptable for this purpose. This light source can be procured from any electrical supplies vendor.
(2) *Recording device*. A meter suitable for this purpose is a Weston Instruments No. 856-990103BB photronic cell, which can be procured from Huygen Corp., P.O. Box 316, Wauconda, IL 60084.

A.4.2.9.7 Detailed engineering drawings are in Annex C.

A.6.3.3.1 A downward trend in static pressure indicates leakage in the fire test chamber or exhaust system.

Copyright National Fire Protection Association
Provided by IHS under license with NFPA
No reproduction or networking permitted without license from IHS
Not for Resale

A.6.3.5.1 The following product information is provided for informational purposes only and has not been independently verified, certified, or endorsed by NFPA or any of its technical committees. A Thermo Systems Inc. Model 1610 velocity transducer (thermal anemometer or equivalent), using a readout accurate to 0.001 V, has been found acceptable for the purpose. See 4.2.8.1 for bidirectional probe details.

A.6.4.1 The following product information is provided for informational purposes only and has not been independently verified, certified, or endorsed by NFPA or any of its technical committees. Wratten filters from the Kodak Company have been found suitable for this purpose. The part numbers of some of the filters are as follows: ND0.1-KF1702; ND0.3-KF1710; ND0.5-KF1718; and ND1.0-KF1740. The filters can be purchased from a professional photography supplies vendor. Certification of calibrated optical density values should be documented.

A.6.5.1 The igniting fire length of 1.37 m (4.5 ft) is controlled by the total gas input of 86 kW (294,000 Btu/hr) and the air draft 1.22 m/sec (240 ft/min) through the tunnel.

The following product information is provided for informational purposes only and has not been independently verified, certified, or endorsed by NFPA or any of its technical committees: A Cutler-Hammer gas calorimeter has been found suitable for measuring this gas heating value.

A.6.6.1.1 Preheating is for the purpose of establishing the conditions that exist following successive tests and to indicate control of the heat input into the test chamber.

A.6.7.1.1 The following product information is provided for informational purposes only and has not been independently verified, certified, or endorsed by NFPA or any of its technical committees: A suitable insulated conductor is manufactured by Lucent Technologies and designated "Cable 910ST," Part No. COMCODE108210568.

A.9.2 Oven cleaner fluid has been found suitable for this purpose. A putty knife or another appropriate instrument has also been found to be suitable for the cleaning purpose.

A.9.3 A wire brush and putty knife have been found suitable for this purpose.

Annex B Smoke and Heat Release Measurements

This annex is not a part of the requirements of this NFPA document but is included for informational purposes only.

B.1 General. In this section, equipment, procedures, and calculations used for determination of heat and smoke release rates are provided.

B.2 The volumetric flow rate in the exhaust is calculated as follows:

$$V_s = VA$$

where:
V_s = volumetric flow rate (m^3/sec)
V = linear duct velocity (m/sec)
A = duct area (m^2)

B.3 Smoke Release Rate Measurement.

B.3.1 Smoke Release Rate Equipment. The smoke release rate equipment consists of the smoke measurement system described in 4.2.9 and the airflow measurement system described in 4.2.8.

B.3.2 Smoke Release Rate Calculation.

B.3.2.1 The smoke release rate is calculated as follows:

$$SRR = \left(\frac{OD}{l}\right)\left(\frac{T_p}{T_s}\right)V_s$$

where:
SRR = smoke release rate (m^2/sec)
OD = optical density (calculated as described in 10.1.1)
l = path length for smoke measurement (duct diameter, m)
T_p = temperature at the photoelectric cell (K)
T_s = temperature at the bidirectional probe (K)
V_s = volumetric flow rate (m^3/sec)

B.3.2.2 Peak smoke release rate is the maximum value of smoke release rate during the test.

B.3.2.3 Total smoke release is calculated as follows:

$$\text{Total smoke} = \Delta t \sum_{i=1}^{N-1} 0.5\left(SRR_{i+1} + SRR_i\right)$$

where:
total smoke = total smoke release ($1/m^2$)
Δt = scan time (seconds) = 2 seconds
N = number of data points
SRR_1 = first smoke release rate value
i = data point counter
SRR_i = smoke release value from $i = 1$ to $i = N - 1$

B.4 Heat Release Rate Measurement.

B.4.1 Heat Release Rate Equipment.

B.4.1.1 The heat release rate equipment consists of the airflow measurement system described in 4.2.8 and gas analysis and sampling equipment described herein.

B.4.1.2 The gas analysis and sampling equipment consists of the following:

(1) Stainless steel gas sampling tube, located in the exhaust duct to obtain a continuously flowing sample, for determining the oxygen concentration of the exhaust gas as a function of time
(2) Particulate filters to remove particulate smoke
(3) Ice bath, drierite, and silica gel to remove moisture from the gas sample
(4) Ascarite to remove carbon dioxide
(5) Pump and flow control devices
(6) Oxygen analyzer

The filters and water trap are placed in line ahead of the analyzer to remove particulate and water. The oxygen analyzer should be capable of measuring the oxygen concentration in the range from 0 percent to 21 percent with a full-scale accuracy of ±0.25 percent. The signal from the oxygen analyzer is to be within 10 percent of its final value within 30 seconds after a step change is introduced in the composition of the gas stream flowing past the inlet to the gas sampling tube. A typical arrangement of the heat release rate gas sampling equipment is shown in Figure B.4.1.2.

Copyright National Fire Protection Association
Provided by IHS under license with NFPA
No reproduction or networking permitted without license from IHS
Not for Resale

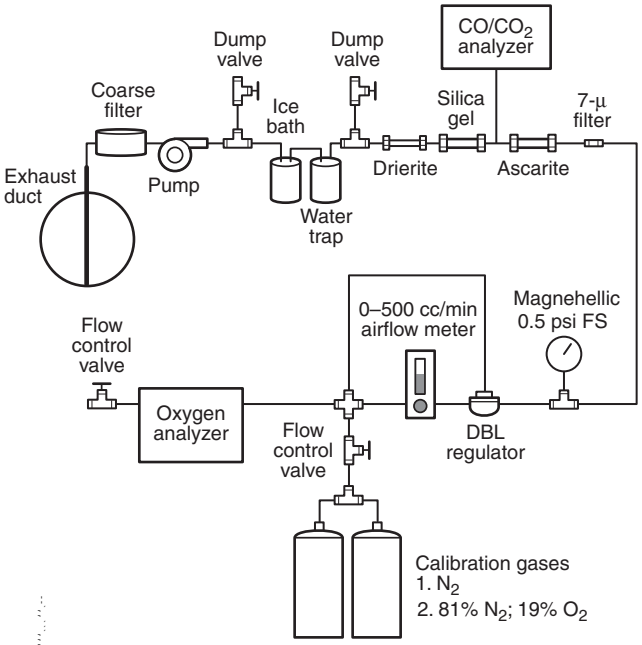

FIGURE B.4.1.2 Schematic of Gas Sampling System.

The following product information is being provided for informational purposes only and has not been independently verified, certified, or endorsed by NFPA or any of its technical committees. An analyzer found acceptable for this purpose is Siemens Oxymat 5F Type Oxygen Analyzer. For information on the selection of the analyzer and the acceptable drift and noise characteristics, see Section B.5.

B.4.2 Procedures for Calibration of Test Equipment.

B.4.2.1 Analyzer Calibration. The oxygen analyzer is zeroed and spanned prior to the start of each day of testing. The analyzer is zeroed by introducing 100 percent nitrogen gas to the instrument at the same pressure and flow rate as set for sample gases. The analyzer is spanned by introducing ambient duct air via the sample probe and adjusting the span to 20.95 percent oxygen. The spanning and zeroing process is continued until adjustment-free accuracy is obtained. Following zeroing and spanning, linearity of the analyzer response curve is verified by introducing bottled gas of a known oxygen concentration (for example, 19 percent oxygen) to the analyzer. The delay time of the analyzer is checked by introducing ambient duct air to the analyzer and noting the time the analyzer readings reach 90 percent of the final reading.

B.4.2.2 Delay Time of Oxygen Analyzer. The delay time of the oxygen analyzer is determined at the flow velocities to be used during the test. The burner is ignited, allowed to reach steady state, and then turned off. The delay time of the analyzer is determined as the time difference between the time when steady state of the burner is reached and the time when the analyzer reading reaches 90 percent of the final reading. The delay time is used to time shift all subsequent oxygen readings.

B.4.2.3 Calibration Test. A 5-minute heat release calibration test is performed at the start of testing each day. The heat release measurement instrumentation is calibrated by burning methane gas and comparing the total heat release measured from oxygen consumption and total heat release calculated from the metered gas input. The methane values for heat of combustion, 50 MJ/kg, and the corresponding heat of combustion per kg of oxygen consumed, 12.54 MJ/kg, are used for the calculations. The calibration constant, C_f, is calculated using the following equation:

$$C_f = \frac{\text{heat release rate based on gas consumed}}{\text{heat release based on calorimetry}} = \frac{\text{gas flow rate} \times \text{heat content of gas}}{\text{average heat release rate of burner at steady state}}$$

For example, this equation takes the following form:

$$C_f = \frac{32{,}785\dot{V}}{\dfrac{\Delta t \sum_{i=1}^{N-1} 0.5\left(\text{HRR}_{i+1} + \text{HRR}_i\right)}{180}}$$

where:

32,785 = heat produced (kJ) per unit volume (m^3) of methane at 25°C
$\dot{V}$ = methane gas flow rate supplied to the burner (m^3/sec)
Δt = scan time in seconds = 2
HRR = heat release rate as calculated using the equation in B.4.4.1 with $C_f = 1$
i = ith data point
N = number of data points from 60 seconds to 240 seconds
HRR_i = heat release value from $i = 1$ to $i = N - 1$
180 = 60 percent of test time (seconds) during which the burner is at steady state

B.4.2.4 Calibration Constant. The calibration constant is employed to adjust the heat release rate measured during testing to obtain the actual heat release rate. The formula for calculating the rate of heat release is specified in B.4.4.

B.4.3 Heat Release Test Procedure

B.4.3.1 The power to the analyzers and pump is turned on. All filters are inspected and replaced if necessary. The ice for the cold trap is refilled. The flowmeters are checked and adjusted if necessary.

B.4.3.2 The procedures specified in B.4.2 are performed.

B.4.3.3 The power to the digital acquisition equipment and the computer is turned on.

B.4.3.4 The test is conducted with procedures described in Chapter 6.

B.4.4 Heat Release Rate Calculations.

B.4.4.1 The heat release rate is calculated using the following equation:

$$\text{HRR} = E' C_f M \left(\frac{0.2095 - Y}{1.105 - 1.5Y} \right)$$

Copyright National Fire Protection Association
Provided by IHS under license with NFPA
No reproduction or networking permitted without license from IHS
Not for Resale

where:

HRR = heat release rate of the specimen and burner (kW)
E' = heat produced (kJ) per unit volume (m^3) of oxygen consumed at 25°C ($E' = 17.2 \times 10^3$ for cable testing; and $E' = 16.4 \times 10^3$ for calibration testing with methane gas)
C_f = calorimeter calibration factor determined by the procedure defined in B.4.2.3 (when this equation is used during calibration tests, $C_f = 1$)
M = volumetric flow rate in the duct (m^3/sec) referred to 25°C
0.2095 = ambient mole fraction of oxygen
Y = oxygen concentration (mole fraction)
1.5 = chemical expansion factor
1.105 = ratio of moles of combustion products to the moles of oxygen consumed

B.4.4.2 Peak Heat Release Rate. The peak heat release rate is the maximum heat release rate for the duration of the test.

B.4.4.3 Total Heat Released. The total heat released is calculated as a time integral of the heat release rate calculated in B.4.4.1 using a trapezoidal rule as follows:

$$\text{Total heat released} = \Delta t\left(\sum_{i=2}^{N-1} 0.5\left(\text{HRR}_{i+1} - \text{HRR}_i\right)\right)$$

where:

total heat released = kJ
Δt = scan time (seconds) = 2 seconds
N = number of data points
HRR_1 = first heat release rate
i = ith data point
HRR_i = heat release value from $i = 1$ to $i = N - 1$

B.4.5 Heat Release Rate Posttest Procedure.

B.4.5.1 Inspect the drierite and ascarite used for the heat release measurements. Replace them if the drierite has turned pink or if the ascarite has become hard.

B.4.5.2 Inspect the filters after each test. Replace them if they appear to be dirty.

B.4.5.3 Inspect the water trap and remove any condensed water. If ice is used in the water trap, replenish as necessary.

B.4.5.4 Blow out the holes of the gas sampling line and the bidirectional probe lines to remove any accumulated soot deposition.

B.5 Method for Determining Suitability of Oxygen Analyzers for Making Heat Release Measurements.

B.5.1 General. The type of oxygen analyzer best suited for fire analysis is of the paramagnetic type. Electrotechnical analyzers or analyzers using zirconia sensors have generally been found not to have adequate sensitivity or suitability for this type of work. The normal range for this type of instrument is 0–25 volume percent oxygen. The linearity of the paramagnetic analyzers is normally better than can be checked by a user laboratory; thus, verifying their linearity is not necessary. It is important, however, to confirm the noise and short-term drift of the instrument used.

B.5.2 Procedure.

B.5.2.1 Connect two gas bottles having differing levels of oxygen approximately two percentage points apart (for example, 15 volume percent and 17 volume percent, or normal clean dry air and 19 volume percent) to a selector valve at the inlet of the analyzer.

B.5.2.2 Connect the electrical power, and let the analyzer warm up for up to 24 hours with one of the test gases flowing through it.

B.5.2.3 Connect a data acquisition system to the output of the analyzer. Quickly switch from the first gas bottle to the second bottle, and immediately start collecting the data, taking one data point per second. Collect data for 20 minutes.

B.5.2.4 Determine the drift by using a least-squares analysis fitting procedure to pass a straight line through the last 19 minutes of data. Extrapolate the line back through the first minute of data. The difference between the readings at 1 minute and 20 minutes on the fitted straight line represents the short-term drift. Record the drift in units of parts per million of oxygen.

B.5.2.5 The noise is represented by the root-mean-square deviation around the fitted straight line. Calculate that root-mean-square value, and record it in parts per million.

B.5.2.6 The analyzer is suitable for use in heat release measurements if the sum of the drift plus the noise terms is 50 parts per million oxygen (note that both terms are expressed as positive numbers).

B.5.3 Additional Precautions. A paramagnetic oxygen analyzer is directly sensitive to barometric pressure changes at its outlet port and to flow rate fluctuations in the sample supply stream. It is essential that the flow stream be regulated. Use either a flow rate regulator of the mechanical diaphragm type or an electronic mass flow rate controller. To protect against errors due to changes in barometric pressure, one of the following procedures should be used:

(1) Control the back pressure to the analyzer with a back pressure regulator of the absolute type.
(2) Measure the actual pressure electrically at the detector element, and provide a signal correction for the analyzer output.

B.6 Optional Data. If optional heat and smoke release rate is measured, report the following:

(1) Peak HRR (kW) and time at which it occurred
(2) Graph of the heat release rate curve
(3) Total heat released (area under heat release rate curve) (MJ)
(4) Graph of the smoke release rate curve
(5) Total smoke released (area under the smoke release rate curve) (m^2)
(6) Peak smoke release rate (m^2/sec)
(7) Graph of smoke release rate versus time

Annex C Smoke Measurement System and Chamber-Brick Configuration: Detail Drawings

This annex is not a part of the requirements of this NFPA document but is included for informational purposes only.

C.1 Chamber-Brick Configuration. Figure C.1(a) through Figure C.1(c) detail the chamber-brick configuration.

C.2 Smoke Measurement System. Figure 4.2.9.1 and Figure C.2(a) through Figure C.2(r) detail the smoke measurement system.

Copyright National Fire Protection Association
Provided by IHS under license with NFPA
No reproduction or networking permitted without license from IHS
Not for Resale

No.	Description
1	64 mm × 114.5 mm × 229 mm (2½" × 4½" × 9") w/ 25.4 mm × 25.4 mm × 3 mm (1" × 1" × ⅛") cut out of 1 corner
2	64 mm × 114.5 mm × 229 mm (2½" × 4½" × 9")
3	64 mm × 114.5 mm × 229 mm (2½" × 4½" × 9")
4	64 mm × 114.5 mm × 229 mm (2½" × 4½" × 9")
5	64 mm × 114.5 mm × 229 mm (2½" × 4½" × 9")
6	64mm × 114.5 mm × 114.5 mm (2½" × 4½" × 4½")
7	64 mm × 114.5 mm × 229 mm (2½" × 4½" × 9")
8	64 mm × 114.5 mm × 229 mm (2½" × 4½" × 9")
9	64 mm × 114.5 mm × 229 mm (2½" × 4½" × 9")
10	64 mm × 114.5 mm × 229 mm (2½" × 4½" × 9")
11A	64 mm × 114.5 mm × 114.5 mm (2½" × 4½" × 4½")
11B	64 mm × 114.5 mm × 114.5 mm (2½" × 4½" × 4½")
12	64 mm × 114.5 mm × 229 mm (2½" × 4½" × 9")
13	64 mm × 114.5 mm × 229 mm (2½" × 4½" × 9") w/ 25.4 mm × 25.4 mm × 1.5 mm (1" × 1" × 1⁄16") cut out of 1 corner
14	64 mm × 114.5 mm × 229 mm (2½" × 4½" × 9")
15	64 mm × 114.5 mm × 229 mm (2½" × 4½" × 9")
16	64 mm × 114.5 mm × 229 mm (2½" × 4½" × 9")
17	64 mm × 114.5 mm × 229 mm (2½" × 4½" × 9")
18	64 mm × 114.5 mm × 114.5 mm (2½" × 4½" × 4½")
19	13 mm x 114.5 mm × 130 mm (½" × 4½" × 5⅛")
20	25.4 mm × 76 mm × 229 mm (1" × 3" × 9")

No.	Description
21	64 mm × 114.5 mm × 229 mm (2½" × 4½" × 9") w/ 13 mm × 17 mm (½" × ⅝") notch along edge
22	Wedge (cut to fit)
23	64 mm × 114.5 mm × 229 mm (2½" × 4½" × 9")
24	64 mm × 114.5 mm × 229 mm (2½" × 4½" × 9")
25	64 mm × 114.5 mm × 103 mm (2½" × 4½" × 4 1⁄16")
26	64 mm × 114.5 mm × 114.5 mm (2½" × 4½" × 4½")
27	64 mm × 114.5 mm × 229 mm (2½" × 4½" × 9")
28	64 mm × 114.5 mm × 229 mm (2½" × 4½" × 9")
29	64 mm × 114.5 mm × 229 mm (2½" × 4½" × 9")
30	64 mm × 114.5 mm × 229 mm (2½" × 4½" × 9")
31	64 mm × 114.5 mm × 229 mm (2½" × 4½" × 9")
32	13 mm × 114.5 mm × 130 mm (½" × 4½" × 5⅛")
33	25.4 mm × 76 mm × 229 mm (1" × 3" × 9")
34	64 mm × 114.5 mm × 229 mm (2½" × 4½" × 9")
35	64 mm × 114.5 mm × 229 mm (2½" × 4½" × 9")
36	64 mm × 114.5 mm × 229 mm (2½" × 4½" × 9")
37	64 mm × 114.5 mm × 229 mm (2½" × 4½" × 9")
38	64 mm × 114.5 mm × 114.5 mm (2½" × 4½" × 4½")
39A	64 mm × 114.5 mm × 229 mm (2½" × 4½" × 9")
39B	64 mm × 114.5 mm × 229 mm (2½" × 4½" × 9")
40	Between window brick (cut to fit)
41	Between window brick (cut to fit)

FIGURE C.1(a) Brick Sizes and Locations.

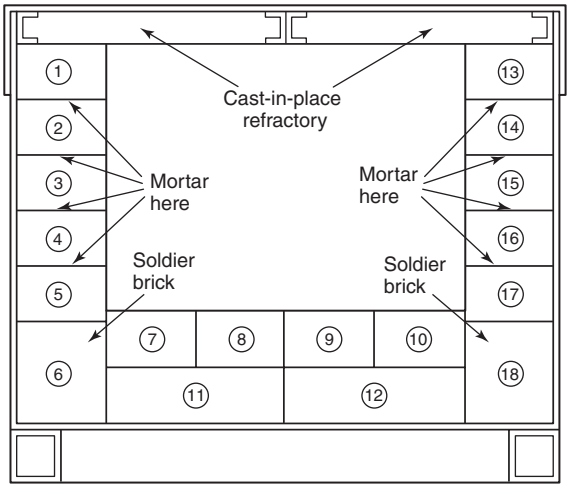

FIGURE C.1(b) Inlet Refractory Soldier Brick — Mortar at Side Faces Only.

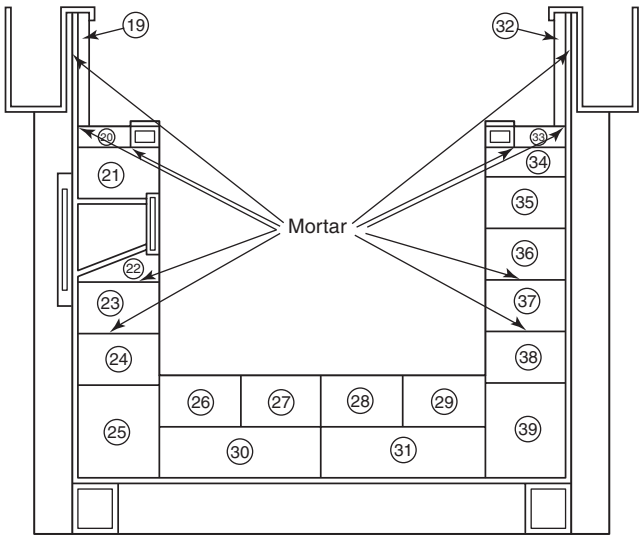

FIGURE C.1(c) Cross-Section of the Fire Test Chamber.

Copyright National Fire Protection Association
Provided by IHS under license with NFPA
No reproduction or networking permitted without license from IHS
Not for Resale

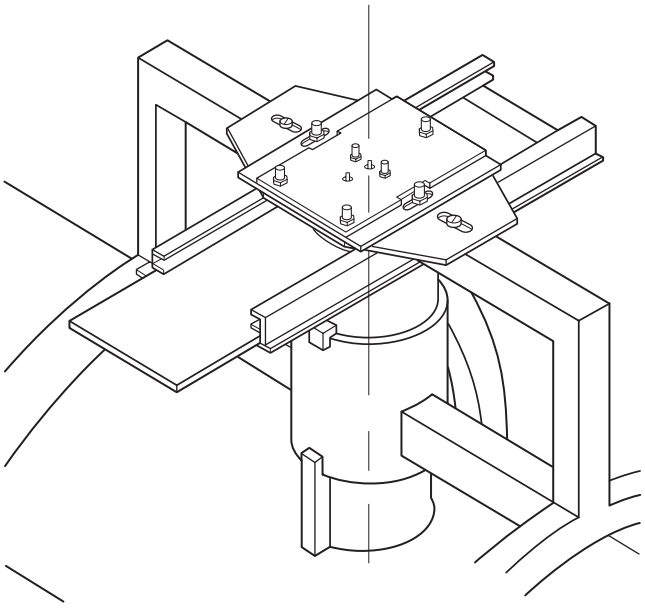

FIGURE C.2(a) Top View — Photo Detector.

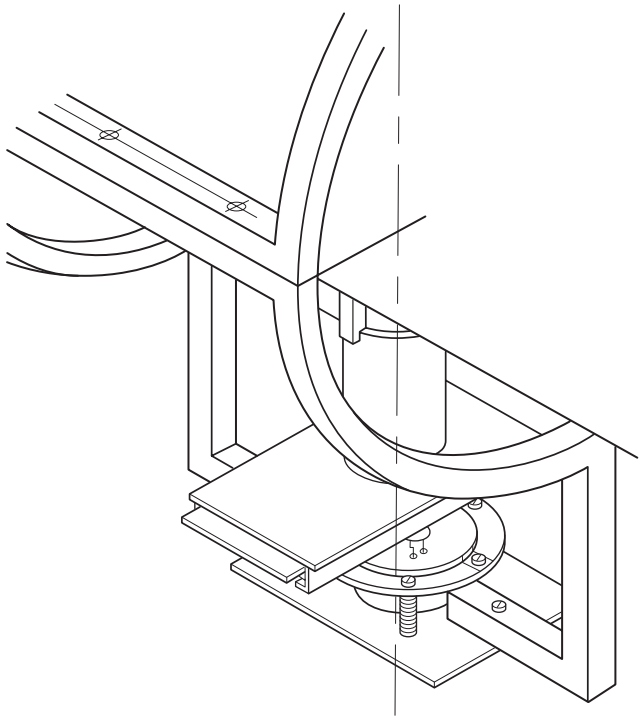

FIGURE C.2(b) Bottom View — Lamp.

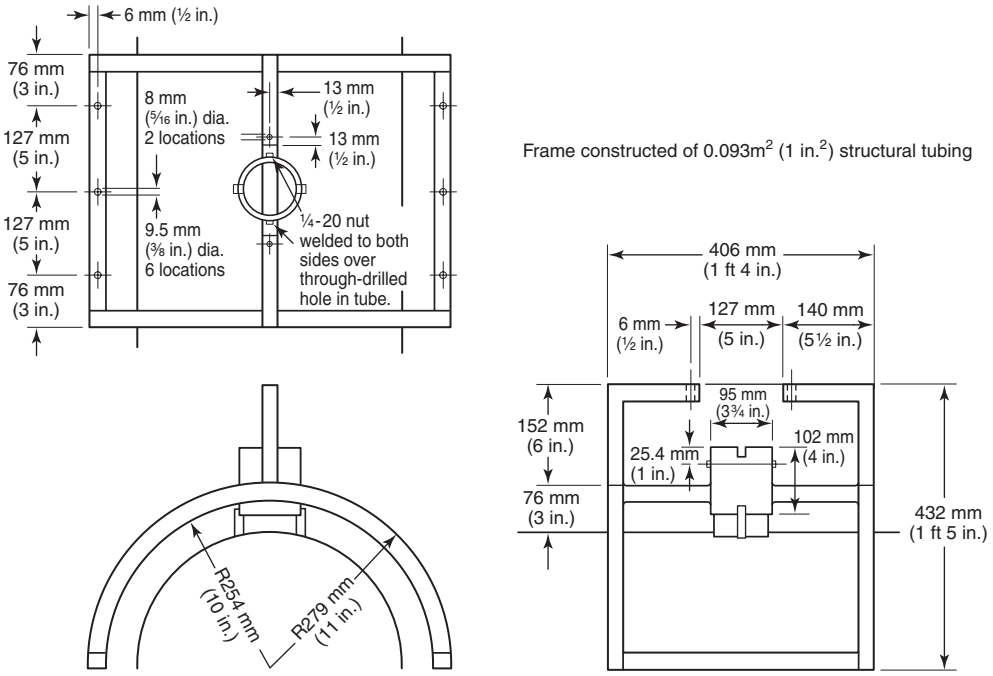

FIGURE C.2(c) Top Ring Half.

Copyright National Fire Protection Association
Provided by IHS under license with NFPA
No reproduction or networking permitted without license from IHS
Not for Resale

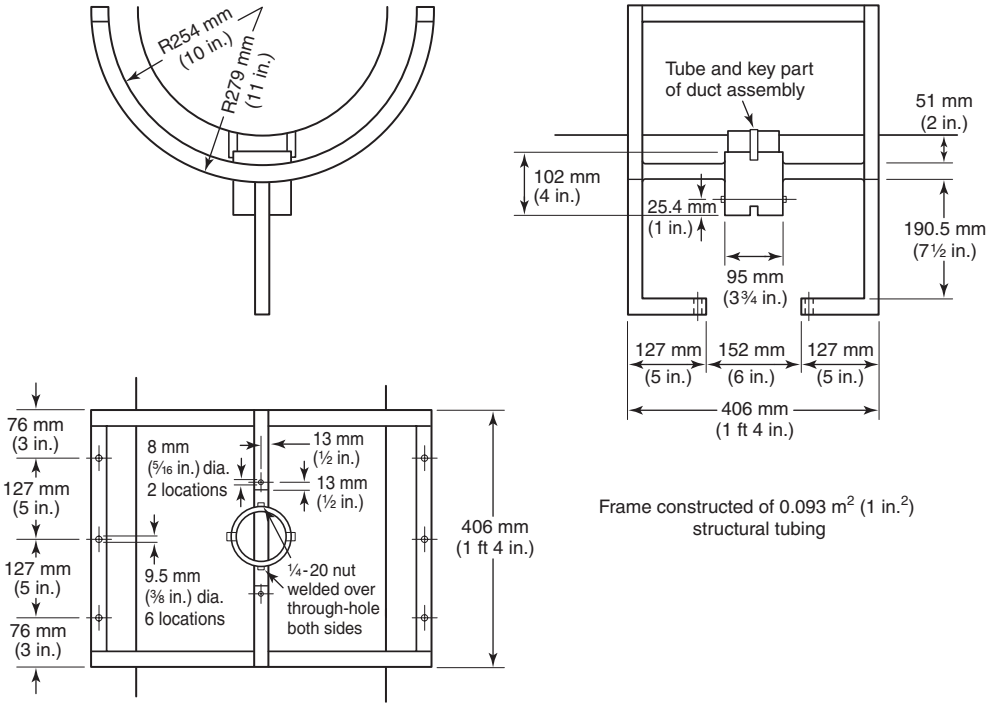

FIGURE C.2(d) Bottom Ring Half.

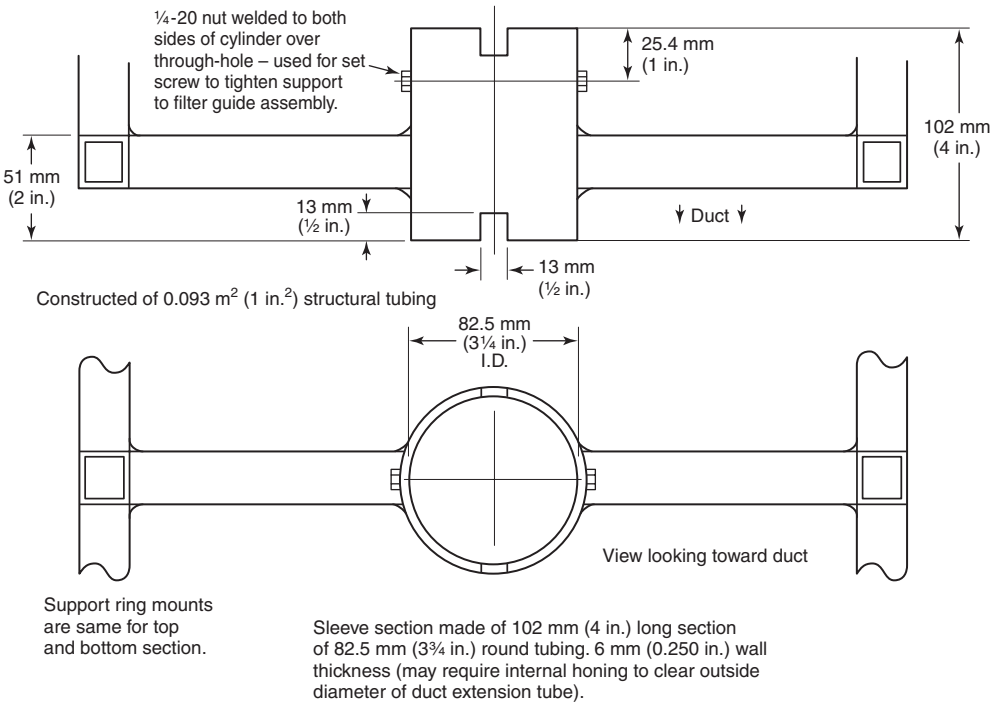

FIGURE C.2(e) Extension Tube Attachment.

Copyright National Fire Protection Association
Provided by IHS under license with NFPA
No reproduction or networking permitted without license from IHS
Not for Resale

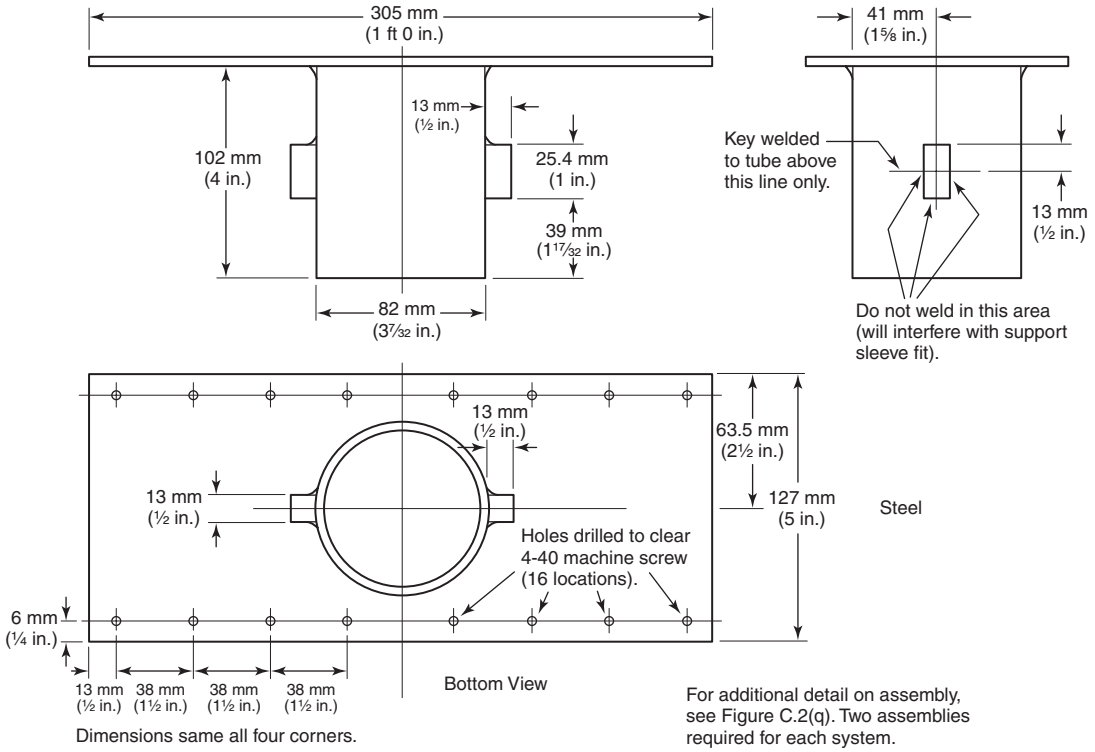

FIGURE C.2(f) Filter Holder Adapter Assembly.

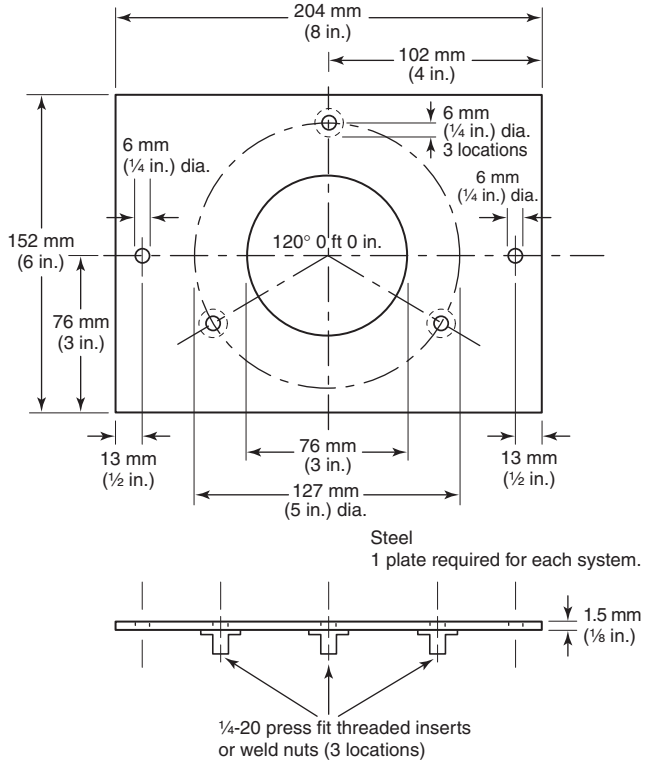

FIGURE C.2(g) Lamp Mounting Plate.

Copyright National Fire Protection Association
Provided by IHS under license with NFPA
No reproduction or networking permitted without license from IHS
Not for Resale

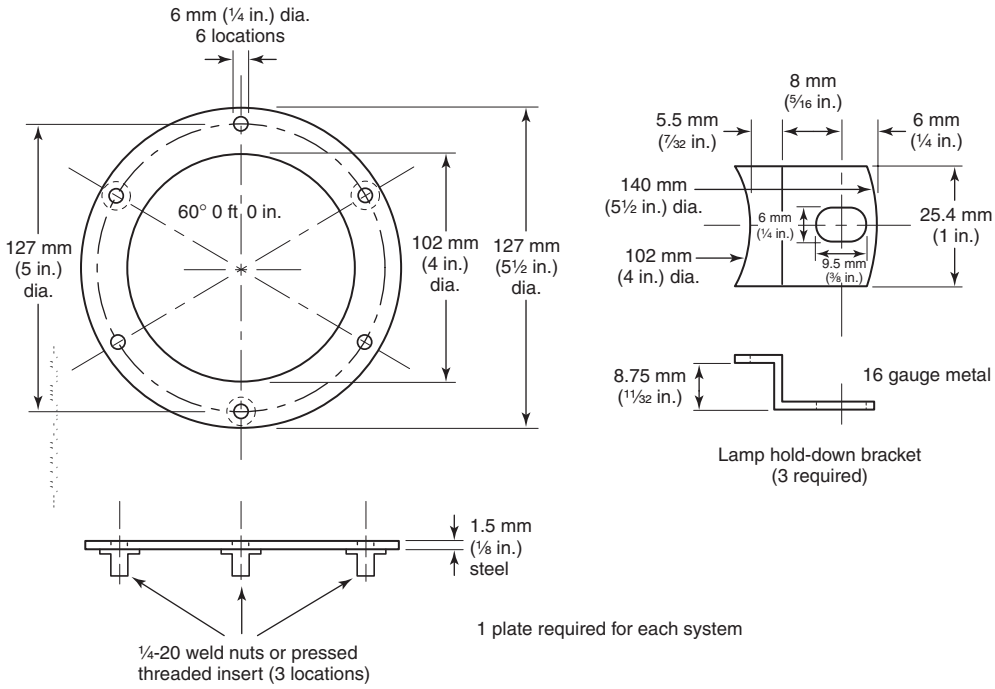

FIGURE C.2(h) Lamp Retaining Ring/Clamps.

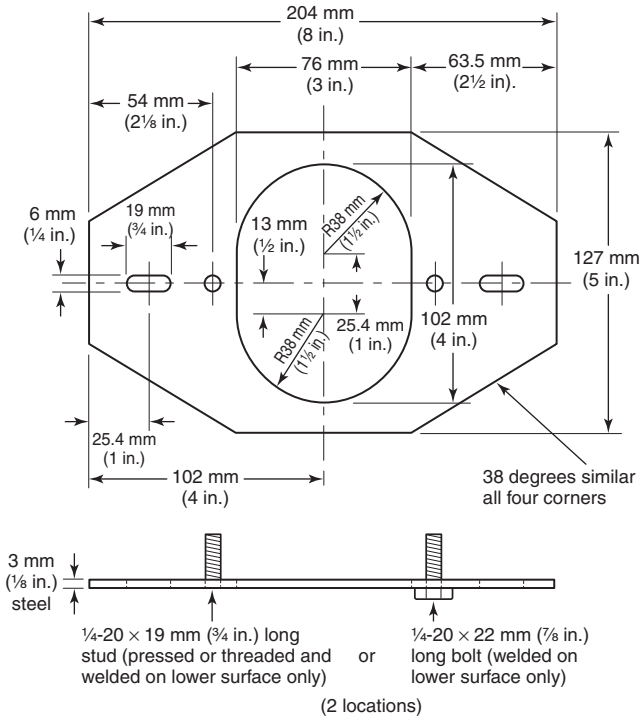

1 assembly required for each system.

FIGURE C.2(i) Photocell Duct Inline Adjustment Plate.

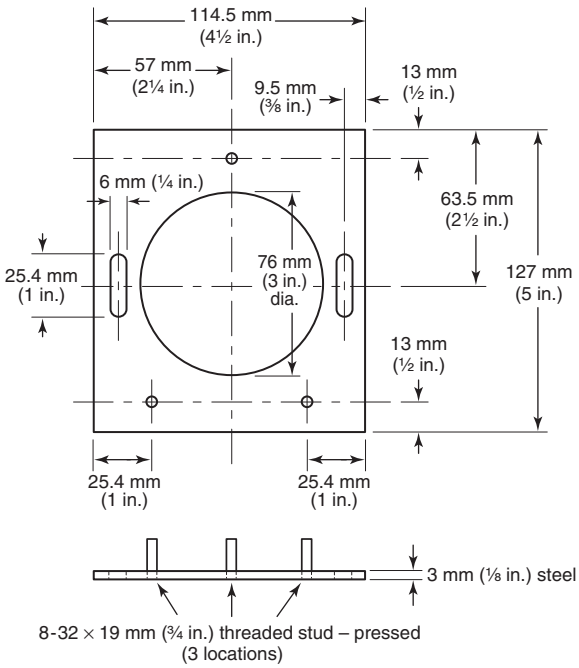

1 assembly required for each system.

FIGURE C.2(j) Photocell Duct Cross Adjustment Plate.

Copyright National Fire Protection Association
Provided by IHS under license with NFPA
No reproduction or networking permitted without license from IHS
Not for Resale

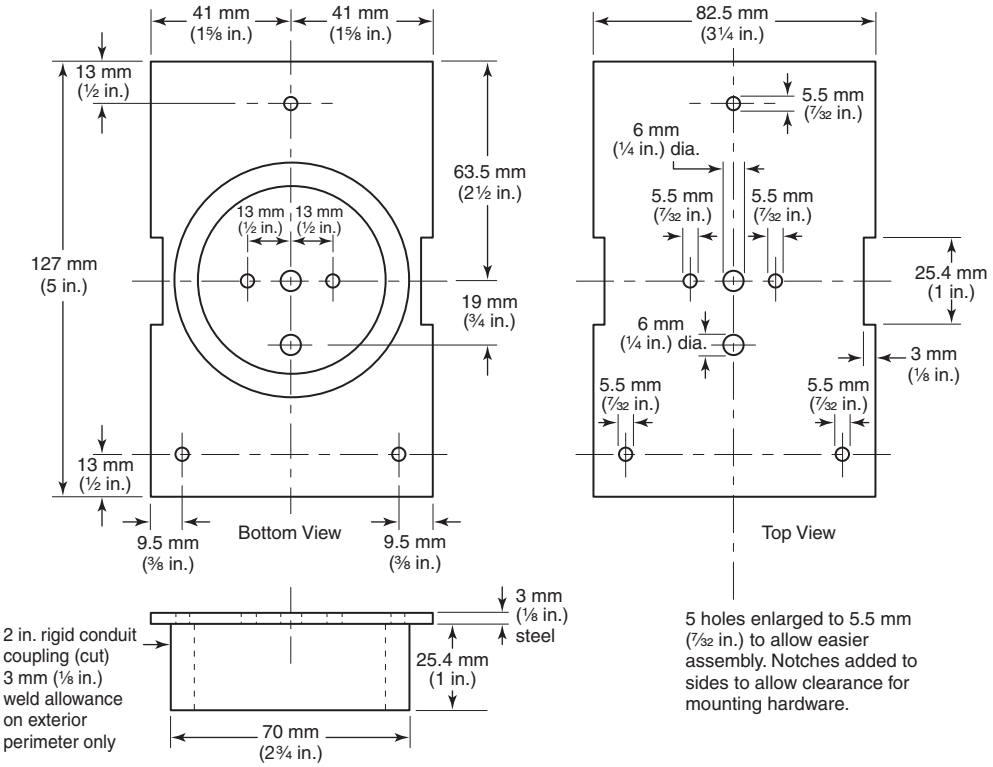

FIGURE C.2(k) Photocell Mounting Plate.

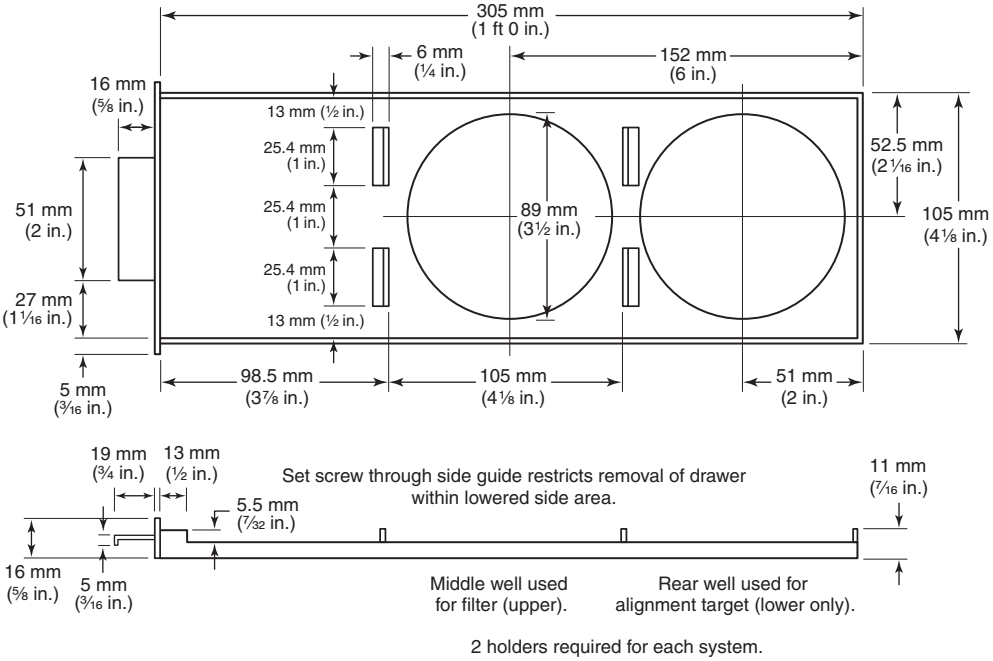

Constructed of 1.5 mm (1⁄16 in.) thick metal sheet.

Filter holder 305 mm × 105 mm (12 in. × 4⅛ in.) drawer fully inserted for normal test procedure.

FIGURE C.2(l) Filter Holder Drawer.

--`,,```,,,,````-`-`,,`,,`,`,,`---

Copyright National Fire Protection Association
Provided by IHS under license with NFPA
No reproduction or networking permitted without license from IHS
Not for Resale

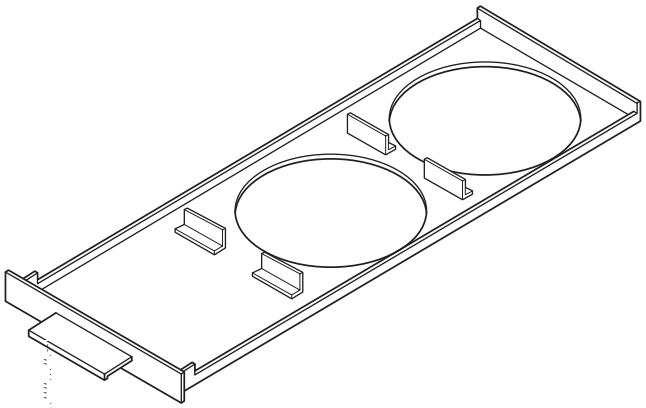

FIGURE C.2(m) Filter Holder Drawer.

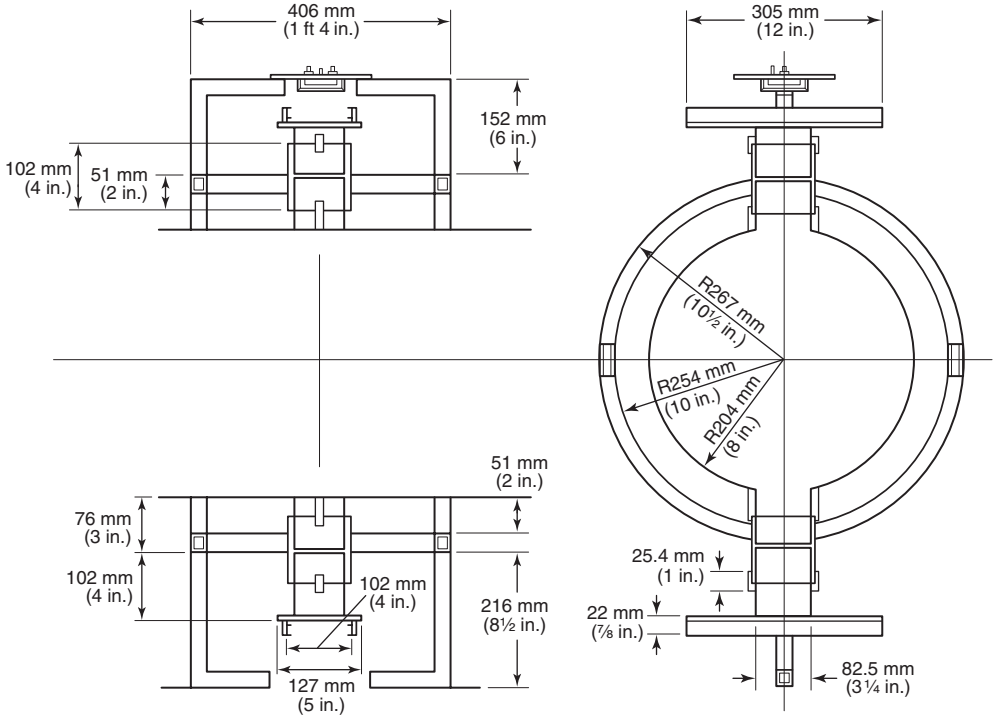

FIGURE C.2(n) Ring and Filter Holder Assembly Cross-Section.

Copyright National Fire Protection Association
Provided by IHS under license with NFPA
No reproduction or networking permitted without license from IHS
Not for Resale

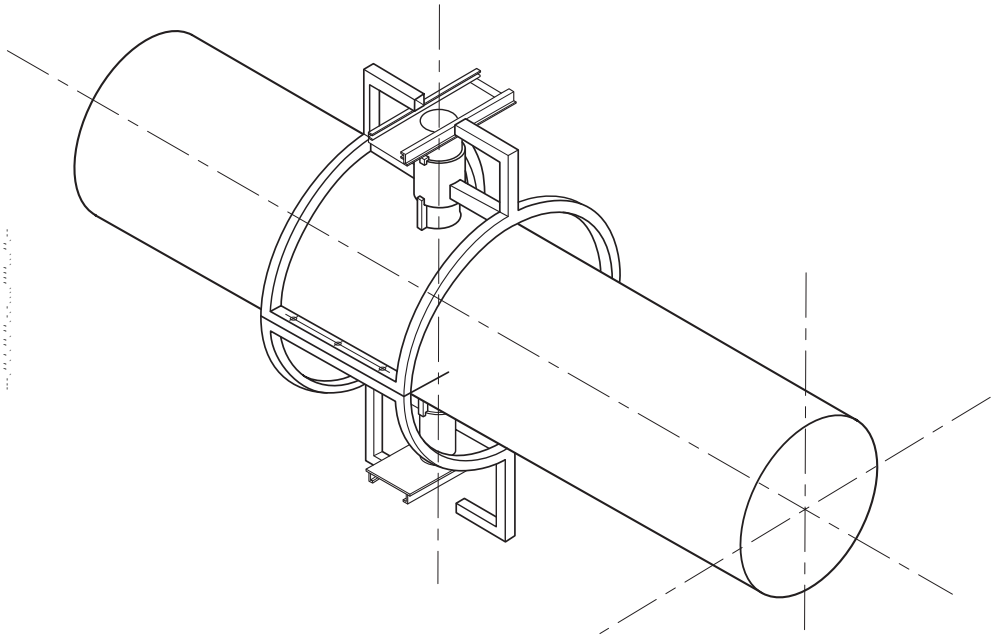

FIGURE C.2(o) Ring and Filter Assembly.

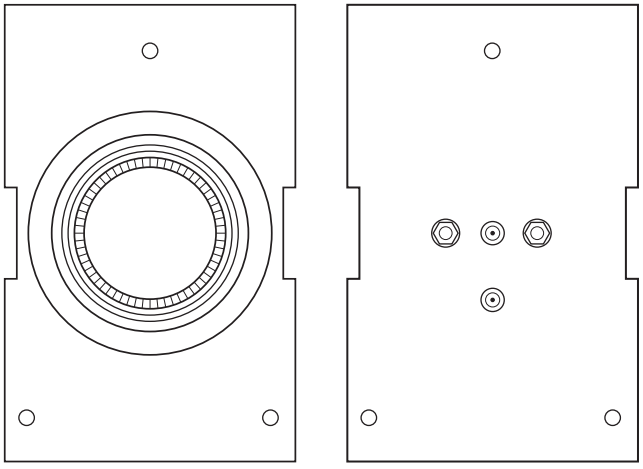

FIGURE C.2(p) Photocell Mounting Assembly.

Copyright National Fire Protection Association
Provided by IHS under license with NFPA
No reproduction or networking permitted without license from IHS
Not for Resale

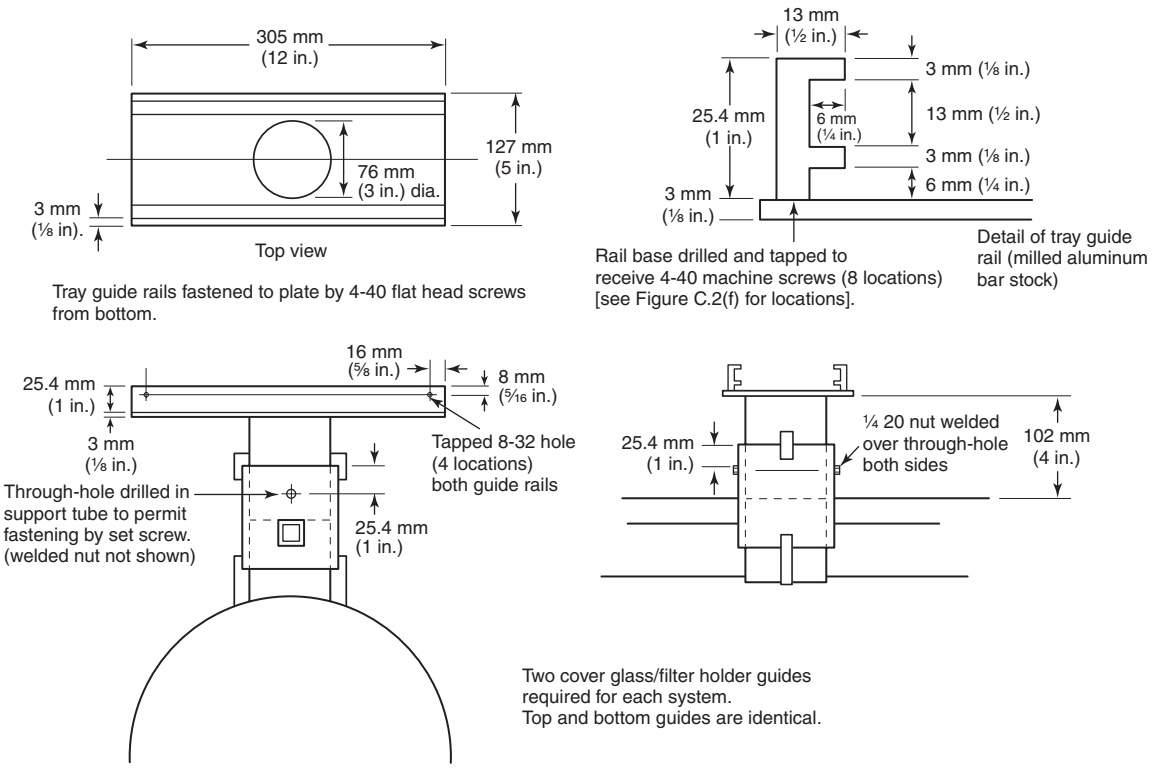

FIGURE C.2(q) Filter Adapter Assembly.

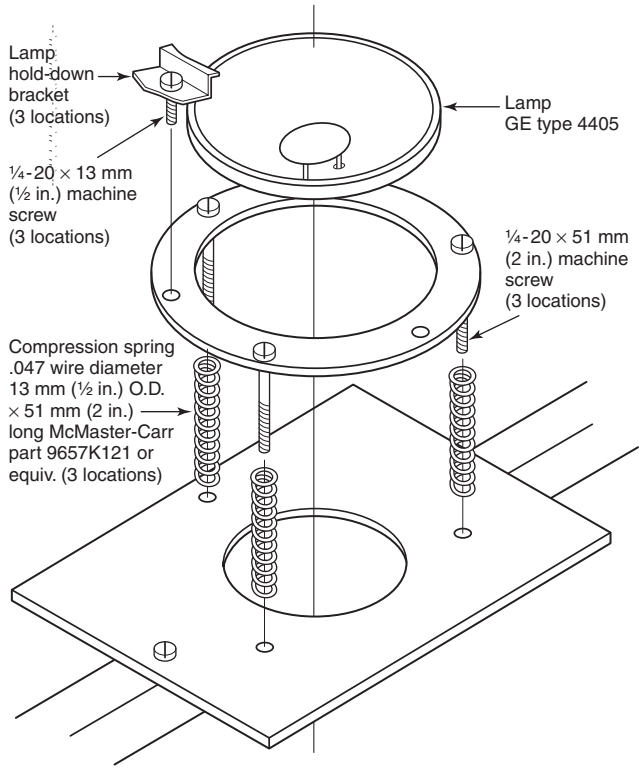

FIGURE C.2(r) Lamp Assembly View (Exploded).

Annex D Informational References

D.1 Referenced Publications. The documents or portions thereof listed in this annex are referenced within the informational sections of this standard and are not part of the requirements of this document unless also listed in Chapter 2 for other reasons.

D.1.1 NFPA Publications. National Fire Protection Association, 1 Batterymarch Park, Quincy, MA 02169-7471.

NFPA 70, *National Electrical Code®*, 2005 edition.

NFPA 251, *Standard Methods of Tests of Fire Resistance of Building Construction and Materials*, 2006 edition.

D.1.2 Other Publications.

D.1.2.1 UL Publications. Underwriters Laboratories Inc., 333 Pfingsten Road, Northbrook, IL 60062-2096.

UL 2196, *Standard for Tests of Fire Resistive Cables*, 2001.

D.2 Informational References. (Reserved)

D.3 References for Extracts in Informational Sections. (Reserved)

Copyright National Fire Protection Association
Provided by IHS under license with NFPA
No reproduction or networking permitted without license from IHS
Not for Resale

Index

Copyright © 2006 National Fire Protection Association. All Rights Reserved.

The copyright in this index is separate and distinct from the copyright in the document that it indexes. The licensing provisions set forth for the document are not applicable to this index. This index may not be reproduced in whole or in part by any means without the express written permission of NFPA.

-A-

Airflow
- Exhaust adjustment for 8.1.9
- Exhaust duct damper control 4.2.10.3, 8.1.6.1
- Fire test chamber 4.2.3.8
- Fire test chamber system 4.3
  - Calibration of test equipment 6.3, A.6.3.3.1, A.6.3.5.1
  - Tests ..... 6.3.3 to 6.3.5, A.6.3.5.1
- Static pressure 6.3.3.1, 6.3.3.4, 6.3.5.4.5, 6.3.5.4.6, A.6.3.3.1

Air-inlet chamber ..... 4.2.1, Fig. 4.2.1.3
Air-inlet end of test chamber ..... Fig. 4.2.3.1(a), 4.2.4.1.1, 4.2.4.1.3, 4.3.1, 4.3.3.1, 8.1.3
Air-inlet port 4.3.2
Air-inlet shutter ..... Fig. 4.2.1.3, 4.2.2, 4.2.4.1.4, 4.3.3.1, 6.3.3.1(2), 6.3.3.2, 6.3.4.1, 6.6.1.2, 6.6.4.2, 8.1.6
Air-inlet static pressure 6.3.5.1, A.6.3.5.1
Air leakage tests 6.3.3, 6.3.4, A.6.3.3.1
Air velocity 6.3.5, A.6.3.5.1
Apparatus, fire-test ..... *see* Fire test apparatus
Application of standard 1.3, A.1.3

-B-

Boards, top cover ..... *see* Mineral-fiber/cement board

-C-

Cable tray, ladder ..... 1.5.2, Fig. 4.2.3.1(b), 4.4, 5.1, 7.3, 7.4, 8.1.3, 8.1.4.1, Fig. 4.4.1
- Cleaning of 9.3, A.9.3
- Preparation for next test 9.5
- Supports ..... *see* Supports

Calculation ..... Chap. 10
Calculations
- Exhaust duct velocity measurement 8.2, 10.2
- Heat release rate measurement B.4.4
- Optical density of smoke 6.4.3, 10.1
- Smoke release rate B.3.2

Calibration ..... Chap. 6
- Airflow 6.3, A.6.3.3.1, A.6.3.5.1
  - Air leakage tests 6.3.3, 6.3.4, A.6.3.3.1
  - Velocity traverse test 6.3.5, A.6.3.5.1
- Frequency of 6.2
- Fuel 6.5, A.6.5.1
- Heat release rate, equipment for measuring B.4.2
- Reinforced inorganic cement board test 6.6, A.6.6.1.1
- Smoke measurement system calibration test 6.4, A.6.4.1
- Standard insulated conductor test 6.7, A.6.7.1.1

Cement board ..... *see* Mineral-fiber/cement board
Cooling of test chamber 6.6.3, 8.1.2, 8.1.8

-D-

Dampers, exhaust duct ..... *see* Exhaust system
Data acquisition equipment 4.6, 8.1.10, 8.1.11.1
Debris removal, post-test 9.1
Definitions ..... Chap. 3
Digital data acquisition equipment 4.6
Ducts
- Exhaust ..... *see* Exhaust system
- Test chamber 4.2.3.1
- Wires and cables installed in 1.2.1, 1.3.1, 1.5.1

-E-

Exhaust system
- Adjustment of 8.1.9
- Blower 4.2.11
- Ducts 4.2.6.1.1, 4.2.7, 6.3.4.1, A.4.2.7.3
  - Dampers 4.2.10, 6.3.5.2, 8.1.6.1
  - Smoke measurement 4.2.9.1, A.4.2.9.1
  - Velocity measurement 4.2.8, 8.2, 10.2
- Transition 4.2.6

-F-

Firebrick ..... Fig. 4.2.3.1(a), Fig. 4.2.3.1(b), 4.2.3.2, 4.2.3.8, 6.1(1), A.4.2.3.2, Fig. C.1(a) to Fig. C.1(c)
Fire test apparatus ..... 1.1.3, 1.5.1 to 1.5.5, 4.2, A.1.1.3, A.4.2; *see also* Exhaust system; Fire test chamber
- Air-inlet chamber ..... 4.2.1, Fig. 4.2.1.3
- Calibration ..... *see* Calibration
- Data acquisition equipment 4.6, 8.1.10, 8.1.11.1
- Heat release rate measurement ..... *see* Heat release rate measurement
- Post-test cleanup and inspection ..... Chap. 9
- Smoke release rate B.3.1

Fire test chamber ..... 1.1.3, 1.5.2, 1.5.5, 4.2.3, Fig. 4.2.3.1(a), Fig. 4.2.3.1(b), A.1.1.3, A.4.2.3, Fig. C.1(a) to Fig. C.1(c)
- Air-inlet end ..... Fig. 4.2.3.1(a), 4.2.4.1.1, 4.2.4.1.3, 6.3.1.1, 8.1.3
- Controls 4.2.4.3.2, 4.2.4.3.3
- Cooling 6.6.3, 8.1.2, 8.1.8.2, 8.1.8.3
- Exhaust transition 4.2.6
- Gas burners ..... 4.2.4, 8.1.10 to 8.1.12
- Maintenance 6.1
- Post-test cleanup and inspection ..... Chap. 9
- Preheating 6.6.1, 6.6.2, 6.6.5.2, 8.1.1, 8.1.8.1, A.6.6.1.1
- Removable top cover ..... Fig. 4.2.3.1(b), 4.2.4.1.3, 4.2.5, 6.3.1.4, 8.1.5.2, A.4.2.5.1.2
  - Damaged boards, replacement/removal of 9.4
  - Preparation for next test 9.5
  - Supports ..... *see* Supports
- Temperature ..... *see* Temperature, test chamber

Fire test room 4.1
Flame travel distance 1.1.1, 1.2.1.1, 1.2.2, 1.5.1, 1.5.6, 6.7.2, A.1.1.1
- Data acquisition equipment 4.6.1
- Definition 3.3.1
- Reports ..... 8.1.10.1, 11.1(3), 11.1(4)

Fuel, test fire 6.5, A.6.5.1

-G-

Gas analysis and sampling equipment ... B.4.1.2, B.4.2, B.4.3.1, B.4.5
Gas burners ..... 4.2.4, 8.1.10 to 8.1.12

-H-

Heat release rate measurement ..... 1.2.1.2, 1.5.7, B.4 to B.6
- Calculations B.4.4
- Equipment A.1.1.3, B.4.1
  - Calibration B.4.2
  - Oxygen analyzers, suitability of B.5
  - Post-test procedure B.4.5
- Optional data B.6
- Peak heat release rate B.4.4.2
- Test procedure B.4.3
- Total heat released B.4.4.3

Copyright National Fire Protection Association
Provided by IHS under license with NFPA
No reproduction or networking permitted without license from IHS
Not for Resale

-I-

Ignition, gas burner 4.2.4.3
Insulated conductor test, standard 6.7, A.6.7.1.1

-L-

Ladder cable tray .....*see* Cable tray, ladder

-M-

Maintenance of test equipment
Post-test cleanup and inspection ..... Chap. 9
Routine maintenance 6.1
Manometer 6.3.3.1, 6.3.3.3, 6.3.3.4, 6.3.4.1, A.6.3.3.1
Measurement, units of 1.4.1
Mineral-fiber/cement board ..... Fig. 4.2.3.1(b), 4.2.5.2, 6.3.1.2, 6.3.1.3
Damaged boards, removal and replacement of 9.4
Inspection of ..... 6.1(3)
Test 6.6, A.6.6.1.1

-O-

Optical density of smoke (OD) ..... 1.1.1, 1.2.1.1, 1.2.2, 1.5.1, 1.5.6, 6.7.2, 11.1(5), 11.1(6), A.1.1.1
Calculations 6.4.3, 10.1
Definition 3.3.2
Optical fiber cables 1.1.1, 1.1.2, 1.2.1, 1.3.1, 1.5.1, A.1.1.1

-P-

Photoelectric cell ..... 4.2.9.4 to 4.2.9.7, 6.4.1, 6.4.2, 8.1.9.1, 8.1.10.2, A.4.2.9.7, A.6.4.1
Plenums, wires and cables installed in 1.1.1, 1.2.1, 1.3.1, 1.5.1, A.1.1.1, A.1.3
Preparation for next test 9.5
Purpose of standard 1.2

-R-

References ..... Chap. 2, Annex D
Report of results ..... 4.6, 8.1.10 to 8.1.12, Chap. 11, B.6

-S-

Scope of standard 1.1, A.1.1.1
Shall (definition) 3.2.1
Should (definition) 3.2.2
SI units 1.4.1
Smoke, optical density of .....*see* Optical density of smoke (OD)
Smoke measurement system ..... 4.2.9, A.1.1.3, A.4.2.9.1, A.4.2.9.7, Fig. C.2(a) to Fig. C.2(r)
Calibration test 6.4, A.6.4.1
Cleanliness of 9.6
Data acquisition equipment 4.6.1
Inspection 8.1.7
Smoke release rate measurement 1.2.1.2, 1.5.7, B.3, B.6
Specimens, test ..... Fig. 4.2.3.1(b), Chap. 5
Holder 1.5.3, 1.5.4
Mounting of cable 8.1.4
Preparation ..... Chap. 7
Conditioning 7.1
Diameter, determination of 7.2
Mounting of cable 7.4, 8.1.4
Nonuniform specimen 7.2.5
Number of cable lengths 7.3
Removal for examination 8.1.12
Report ..... 11.1(1), 11.1(2), 11.1(7)
Support for .....*see* Supports
Standard (definition) 3.2.3
Standard insulated conductor test 6.7, A.6.7.1.1
Supports 8.1.5.1
Posttest cleanup and inspection 9.3, 9.4.2, 9.5, A.9.3
Specifications ..... Fig. 4.2.3.1(b), 4.2.3.6, 4.2.3.7, A.4.2.3.6

-T-

Temperature, test chamber
Cooling of test chamber 6.6.3, 8.1.2, 8.1.8
Fuel supply 6.5.1, A.6.5.1
History 6.6.5
Measurement instrument, test chamber 4.5, 4.6.1, 8.1.8
Preheating 6.6.1, 6.6.2, 6.6.5.2, 8.1.1, 8.1.8.1, A.6.6.1.1
Test apparatus .....*see* Fire test apparatus
Test chamber .....*see* Fire test chamber
Test method
Application of 1.3, A.1.3
Bias ..... Chap. 12
Precision ..... Chap. 12
Purpose 1.2
Scope 1.1, A.1.1.1
Summary 1.5
Test procedure ..... Chap. 8
Tests, calibration .....*see* Calibration
Test specimens .....*see* Specimens, test
Thermocouples 4.2.8.1, 4.5.1, 4.5.2, 6.6.2, 6.6.3, 6.6.4.3, 6.6.5.1, 8.1.8

-U-

Units of measurement 1.4

-V-

Velocity traverse test 6.3.5, A.6.3.5.1

-W-

Windows, test chamber ..... 4.2.3.3 to 4.2.3.5, 4.2.3.8 Fig. 4.2.3.1(b), 6.1(2), A.4.2.3.3
Cleaning 9.2, A.9.2

Copyright National Fire Protection Association
Provided by IHS under license with NFPA
No reproduction or networking permitted without license from IHS
Not for Resale

Sequence of Events Leading to Issuance of an NFPA Committee Document

Step 1: Call for Proposals

- Proposed new Document or new edition of an existing Document is entered into one of two yearly revision cycles, and a Call for Proposals is published.

Step 2: Report on Proposals (ROP)

- Committee meets to act on Proposals, to develop its own Proposals, and to prepare its Report.
- Committee votes by written ballot on Proposals. If two-thirds approve, Report goes forward. Lacking two-thirds approval, Report returns to Committee.
- Report on Proposals (ROP) is published for public review and comment.

Step 3: Report on Comments (ROC)

- Committee meets to act on Public Comments to develop its own Comments, and to prepare its report.
- Committee votes by written ballot on Comments. If two-thirds approve, Report goes forward. Lacking two-thirds approval, Report returns to Committee.
- Report on Comments (ROC) is published for public review.

Step 4: Technical Report Session

- "*Notices of intent to make a motion"* are filed, are reviewed, and valid motions are certified for presentation at the Technical Report Session. ("Consent Documents" that have no certified motions bypass the Technical Report Session and proceed to the Standards Council for issuance.)
- NFPA membership meets each June at the Annual Meeting Technical Report Session and acts on Technical Committee Reports (ROP and ROC) for Documents with "certified amending motions."
- Committee(s) vote on any amendments to Report approved at NFPA Annual Membership Meeting.

Step 5: Standards Council Issuance

- Notification of intent to file an appeal to the Standards Council on Association action must be filed within 20 days of the NFPA Annual Membership Meeting.
- Standards Council decides, based on all evidence, whether or not to issue Document or to take other action, including hearing any appeals.

Committee Membership Classifications

The following classifications apply to Technical Committee members and represent their principal interest in the activity of the committee.

M *Manufacturer:* A representative of a maker or marketer of a product, assembly, or system, or portion thereof, that is affected by the standard.

U *User:* A representative of an entity that is subject to the provisions of the standard or that voluntarily uses the standard.

I/M *Installer/Maintainer:* A representative of an entity that is in the business of installing or maintaining a product, assembly, or system affected by the standard.

L *Labor:* A labor representative or employee concerned with safety in the workplace.

R/T *Applied Research/Testing Laboratory:* A representative of an independent testing laboratory or independent applied research organization that promulgates and/or enforces standards.

E *Enforcing Authority:* A representative of an agency or an organization that promulgates and/or enforces standards.

I *Insurance:* A representative of an insurance company, broker, agent, bureau, or inspection agency.

C *Consumer:* A person who is, or represents, the ultimate purchaser of a product, system, or service affected by the standard, but who is not included in the *User* classification.

SE *Special Expert:* A person not representing any of the previous classifications, but who has a special expertise in the scope of the standard or portion thereof.

NOTES;
1. "Standard" connotes code, standard, recommended practice, or guide.
2. A representative includes an employee.
3. While these classifications will be used by the Standards Council to achieve a balance for Technical Committees, the Standards Council may determine that new classifications of members or unique interests need representation in order to foster the best possible committee deliberations on any project. In this connection, the Standards Council may make appointments as it deems appropriate in the public interest, such as the classification of "Utilities" in the National Electrical Code Committee.
4. Representatives of subsidiaries of any group are generally considered to have the same classification as the parent organization.

Copyright National Fire Protection Association
Provided by IHS under license with NFPA
No reproduction or networking permitted without license from IHS
Not for Resale

NFPA Technical Committee Document Proposal Form

NOTE: All Proposals must be received by 5:00 p.m. EST/EDST on the published Proposal Closing Date.

For further information on the standards-making process, please contact the Codes and Standards Administration at 617-984-7249.

For technical assistance, please call NFPA at 617-770-3000.

FOR OFFICE USE ONLY

Log #:

Date Rec'd:

Please indicate in which format you wish to receive your ROP/ROC ☐ **electronic** ☐ **paper** ☒ **download**
(Note: If choosing the download option, you must view the ROP/ROC from our website; no copy will be sent to you.)

Date April 1, 200X **Name** John J. Doe **Tel. No.** 716-555-1234

Company Air Canada Pilot's Association

Street Address 123 Summer Street Lane **City** Lewiston **State** NY **Zip** 14092

Please indicate organization represented (if any)

1. (a) NFPA Document Title National Fuel Gas Code **NFPA No. & Year** 54, 200X Edition

(**b) Section/Paragraph** 3.3

2. Proposal Recommends (check one): ☐ new text ☒ revised text ☐ deleted text

3. Proposal (include proposed new or revised wording, or identification of wording to be deleted): [Note: Proposed text should be in legislative format, i.e., use underscore to denote wording to be inserted (inserted wording) and strike-through to denote wording to be deleted (~~deleted wording~~).]

Revise definition of effective ground-fault current path to read:

3.3.78 Effective Ground-Fault Current Path. An intentionally constructed, permanent, low impedance electrically conductive path designed and intended to carry ~~underground~~ electric fault current ~~conditions~~ from the point of a ground fault on a wiring system to the electrical supply source.

4. Statement of Problem and Substantiation for Proposal: (Note: State the problem that would be resolved by your recommendation; give the specific reason for your Proposal, including copies of tests, research papers, fire experience, etc. If more than 200 words, it may be abstracted for publication.)

Change uses proper electrical terms.

5. Copyright Assignment

(a) ☐ **I am the author of the text or other material (such as illustrations, graphs) proposed in this Proposal.**

(b) ☒ **Some or all of the text or other material proposed in this Proposal was not authored by me. Its source is as follows** (please identify which material and provide complete information on its source)**:**

ABC Co.

I hereby grant and assign to NFPA all and full rights in copyright in this Proposal and understand that I acquire no rights in any publication of NFPA in which this Proposal in this or another similar or analogous form is used. Except to the extent that I do not have authority to make an assignment in materials that I have identified in (b) above, I hereby warrant that I am the author of this Proposal and that I have full power and authority to enter into this assignment.

Signature (Required)

PLEASE USE SEPARATE FORM FOR EACH PROPOSAL • NFPA Fax: (617) 770-3500

Mail to: Secretary, Standards Council, National Fire Protection Association, 1 Batterymarch Park, Quincy, MA 02169-7471

8/29/2006

SAMPLE

Copyright National Fire Protection Association
Provided by IHS under license with NFPA
No reproduction or networking permitted without license from IHS
Not for Resale

NFPA Technical Committee Document Proposal Form

NOTE: All Proposals must be received by 5:00 p.m. EST/EDST on the published Proposal Closing Date.

For further information on the standards-making process, please contact the Codes and Standards Administration at 617-984-7249.

For technical assistance, please call NFPA at 617-770-3000.

FOR OFFICE USE ONLY

Log #: _____

Date Rec'd: _____

Please indicate in which format you wish to receive your ROP/ROC ☐ electronic ☐ paper ☐ download
(Note: If choosing the download option, you must view the ROP/ROC from our website; no copy will be sent to you.)

Date _____ **Name** _____ **Tel. No.** _____

Company _____

Street Address _____ **City** _____ **State** _____ **Zip** _____

Please indicate organization represented (if any) _____

1. (a) NFPA Document Title _____ **NFPA No. & Year** _____

(b) Section/Paragraph _____

2. Proposal Recommends (check one): ☐ new text ☐ revised text ☐ deleted text

3. Proposal (include proposed new or revised wording, or identification of wording to be deleted): [Note: Proposed text should be in legislative format, i.e., use underscore to denote wording to be inserted (inserted wording) and strike-through to denote wording to be deleted (~~deleted wording~~).]

4. Statement of Problem and Substantiation for Proposal: (Note: State the problem that would be resolved by your recommendation; give the specific reason for your Proposal, including copies of tests, research papers, fire experience, etc. If more than 200 words, it may be abstracted for publication.)

5. Copyright Assignment

(a) ☐ I am the author of the text or other material (such as illustrations, graphs) proposed in this Proposal.

(b) ☐ Some or all of the text or other material proposed in this Proposal was not authored by me. Its source is as follows (please identify which material and provide complete information on its source)**:**

_____

I hereby grant and assign to NFPA all and full rights in copyright in this Proposal and understand that I acquire no rights in any publication of NFPA in which this Proposal in this or another similar or analogous form is used. Except to the extent that I do not have authority to make an assignment in materials that I have identified in (b) above, I hereby warrant that I am the author of this Proposal and that I have full power and authority to enter into this assignment.

Signature (Required) _____

PLEASE USE SEPARATE FORM FOR EACH PROPOSAL • NFPA Fax: (617) 770-3500

Mail to: Secretary, Standards Council, National Fire Protection Association, 1 Batterymarch Park, Quincy, MA 02169-7471

8/29/2006

Copyright National Fire Protection Association
Provided by IHS under license with NFPA
No reproduction or networking permitted without license from IHS
Not for Resale