NFPA 261

Standard Method of Test for Determining Resistance of Mock-Up Upholstered Furniture Material Assemblies to Ignition by Smoldering Cigarettes

2003 Edition

NFPA, 1 Batterymarch Park, PO Box 9101, Quincy, MA 02269-9101
An International Codes and Standards Organization

NFPA License Agreement

This document is copyrighted by the National Fire Protection Association (NFPA), 1 Batterymarch Park, Quincy, MA 02269-9101 USA.
All rights reserved.

NFPA grants you a license as follows: The right to download an electronic file of this NFPA document for temporary storage on one computer for purposes of viewing and/or printing one copy of the NFPA document for individual use. Neither the electronic file nor the hard copy print may be reproduced in any way. In addition, the electronic file may not be distributed elsewhere over computer networks or otherwise. The hard copy print may only be used personally or distributed to other employees for their internal use within your organization.

--`,,,-`-`,,`,,`,`,,`---

Copyright National Fire Protection Association
Provided by IHS under license with NFPA
No reproduction or networking permitted without license from IHS

Not for Resale

IMPORTANT NOTICES AND DISCLAIMERS CONCERNING NFPA DOCUMENTS

NOTICE AND DISCLAIMER OF LIABILITY CONCERNING THE USE OF NFPA DOCUMENTS

NFPA codes, standards, recommended practices, and guides, of which the document contained herein is one, are developed through a consensus standards development process approved by the American National Standards Institute. This process brings together volunteers representing varied viewpoints and interests to achieve consensus on fire and other safety issues. While the NFPA administers the process and establishes rules to promote fairness in the development of consensus, it does not independently test, evaluate, or verify the accuracy of any information or the soundness of any judgments contained in its codes and standards.

The NFPA disclaims liability for any personal injury, property or other damages of any nature whatsoever, whether special, indirect, consequential or compensatory, directly or indirectly resulting from the publication, use of, or reliance on this document. The NFPA also makes no guaranty or warranty as to the accuracy or completeness of any information published herein.

In issuing and making this document available, the NFPA is not undertaking to render professional or other services for or on behalf of any person or entity. Nor is the NFPA undertaking to perform any duty owed by any person or entity to someone else. Anyone using this document should rely on his or her own independent judgment or, as appropriate, seek the advice of a competent professional in determining the exercise of reasonable care in any given circumstances.

The NFPA has no power, nor does it undertake, to police or enforce compliance with the contents of this document. Nor does the NFPA list, certify, test or inspect products, designs, or installations for compliance with this document. Any certification or other statement of compliance with the requirements of this document shall not be attributable to the NFPA and is solely the responsibility of the certifier or maker of the statement.

Copyright National Fire Protection Association
Provided by IHS under license with NFPA
No reproduction or networking permitted without license from IHS
Not for Resale

ADDITIONAL NOTICES AND DISCLAIMERS

Updating of NFPA Documents

Users of NFPA codes, standards, recommended practices, and guides should be aware that these documents may be superseded at any time by the issuance of new editions or may be amended from time to time through the issuance of Tentative Interim Amendments. An official NFPA document at any point in time consists of the current edition of the document together with any Tentative Interim Amendments and any Errata then in effect. In order to determine whether a given document is the current edition and whether it has been amended through the issuance of Tentative Interim Amendments or corrected through the issuance of Errata, consult appropriate NFPA publications such as the National Fire Codes® Subscription Service, visit the NFPA website at www.nfpa.org, or contact the NFPA at the address listed below.

Interpretations of NFPA Documents

A statement, written or oral, that is not processed in accordance with Section 6 of the Regulations Governing Committee Projects shall not be considered the official position of NFPA or any of its Committees and shall not be considered to be, nor be relied upon as, a Formal Interpretation.

Patents

The NFPA does not take any position with respect to the validity of any patent rights asserted in connection with any items which are mentioned in or are the subject of NFPA codes, standards, recommended practices, and guides, and the NFPA disclaims liability for the infringement of any patent resulting from the use of or reliance on these documents. Users of these documents are expressly advised that determination of the validity of any such patent rights, and the risk of infringement of such rights, is entirely their own responsibility.

NFPA adheres to applicable policies of the American National Standards Institute with respect to patents. For further information contact the NFPA at the address listed below.

Law and Regulations

Users of these documents should consult applicable federal, state, and local laws and regulations. NFPA does not, by the publication of its codes, standards, recommended practices, and guides, intend to urge action that is not in compliance with applicable laws, and these documents may not be construed as doing so.

Copyrights

This document is copyrighted by the NFPA. It is made available for a wide variety of both public and private uses. These include both use, by reference, in laws and regulations, and use in private self-regulation, standardization, and the promotion of safe practices and methods. By making this document available for use and adoption by public authorities and private users, the NFPA does not waive any rights in copyright to this document.

Use of NFPA documents for regulatory purposes should be accomplished through adoption by reference. The term “adoption by reference” means the citing of title, edition, and publishing information only. Any deletions, additions, and changes desired by the adopting authority should be noted separately in the adopting instrument. In order to assist NFPA in following the uses made of its documents, adopting authorities are requested to notify the NFPA (Attention: Secretary, Standards Council) in writing of such use. For technical assistance and questions concerning adoption of NFPA documents, contact NFPA at the address below.

For Further Information

All questions or other communications relating to NFPA codes, standards, recommended practices, and guides and all requests for information on NFPA procedures governing its codes and standards development process, including information on the procedures for requesting Formal Interpretations, for proposing Tentative Interim Amendments, and for proposing revisions to NFPA documents during regular revision cycles, should be sent to NFPA headquarters, addressed to the attention of the Secretary, Standards Council, NFPA, 1 Batterymarch Park, P.O. Box 9101, Quincy, MA 02269-9101.

For more information about NFPA, visit the NFPA website at www.nfpa.org.

--`,,,-`-`,,`,,`,`,,`---

Copyright National Fire Protection Association
Provided by IHS under license with NFPA
No reproduction or networking permitted without license from IHS

Not for Resale

Copyright © 2003, National Fire Protection Association, All Rights Reserved

NFPA 261

Standard Method of

Test for Determining Resistance of Mock-Up Upholstered Furniture Material Assemblies to Ignition by Smoldering Cigarettes

2003 Edition

This edition of NFPA 261, *Standard Method of Test for Determining Resistance of Mock-Up Upholstered Furniture Material Assemblies to Ignition by Smoldering Cigarettes*, was prepared by the Technical Committee on Fire Tests and acted on by NFPA at its May Association Technical Meeting held May 18–21, 2003, in Dallas, TX. It was issued by the Standards Council on July 18, 2003, with an effective date of August 7, 2003, and supersedes all previous editions.

This edition of NFPA 261 was approved as an American National Standard on July 18, 2003.

Origin and Development of NFPA 261

Regulation of the manufacture of furniture has been a subject of research and debate since 1967, when the Flammable Fabrics Act was amended by Congress to include products in addition to wearing apparel and home textiles that might constitute an unreasonable flammability risk. The National Bureau of Standards (NBS) began funding laboratory research on the subject in 1968. With its formation in 1973, the U.S. Consumer Product Safety Commission (CPSC) became the government agency responsible for administration of the Flammable Fabrics Act, including the adoption of any program or standard regulating upholstered furniture. The NBS retained responsibility for designing test methods related to flammable fabrics.

In 1976, the NBS submitted a draft to the CPSC for a proposed cigarette-ignition resistance standard for upholstered furniture. Shortly thereafter, however, a reorganization of the CPSC into separate program areas took place. That was followed by nearly a year's worth of work on the commission's children's sleepwear standards, due to findings that a chemical added to sleepwear to make it flame retardant might be carcinogenic. In November 1978, the CPSC staff, after modifying the original standard on upholstered furniture proposed by the NBS, recommended to the CPSC commissioners that they publish the standard.

This standard was developed subsequent to the CPSC actions of 1978-79 by the Technical Committee on Fire Tests and drew heavily on the NBS research and proposed test methodology. The first edition, published in 1983, was identified as NFPA 260B. The 1989 edition was a reconfirmation of the first edition and was renumbered as NFPA 261.

The 1994 and 1998 editions represented reconfirmation of the standard with minor editorial clarifications and stylistic revisions.

For the 2003 edition, the chapter layout of NFPA 261 was reorganized to meet the NFPA *Manual of Style*.

Copyright National Fire Protection Association
Provided by IHS under license with NFPA
No reproduction or networking permitted without license from IHS
Not for Resale

Technical Committee on Fire Tests

William E. Fitch, *Chair*
Omega Point Laboratories Inc., TX [RT]

Patty K. Adair, American Textile Manufacturers Institute Inc., DC [M]
Jesse J. Beitel, Hughes Associates, Inc., MD [SE]
April L. Berkol, Starwood Hotels & Resorts Worldwide, Inc., NY [U]
Rep. American Hotel & Lodging Association
Robert G. Bill, Jr., FM Global, MA [I]
John A. Blair, The Dupont Company, DE [M]
Rep. Society of the Plastics Industry Inc.
Gordon H. Damant, Inter-City Testing & Consulting Corporation of California, CA [SE]
Thomas W. Fritz, Armstrong World Industries, Inc., PA [M]
James R. Griffith, Southwest Research Institute, TX [RT]
Gordon E. Hartzell, Hartzell Consulting, Inc., TX [SE]
Marcelo M. Hirschler, GBH International, CA [SE]
Alfred J. Hogan, Reedy Creek Improvement District, FL [E]
Rep. International Fire Marshals Association
William E. Koffel, Koffel Associates, Inc., MD [SE]
James R. Lawson, U.S. National Institute of Standards and Technology, MD [RT]
Rodney A. McPhee, Canadian Wood Council, Canada, [M]
William S. Metes, Underwriters Laboratories Inc., IL [RT]
Frederick W. Mowrer, University of Maryland, MD [SE]
Nigel R. Stamp, Intertek Testing Services NA, Inc., WI [RT]
Phil M. Stricklen, American Fibers and Yarns Company, GA [M]
Kuma Sumathipala, American Forest & Paper Association, DC [M]
T. Hugh Talley, Hugh Talley Company, TN [M]
Rep. Upholstered Furniture Action Council
Rick Thornberry, The Code Consortium, Inc., CA [SE]
William A. Webb, Performance Technology Consulting, Ltd., IL [SE]
Robert A. Wessel, Gypsum Association, DC [M]
Robert J. Wills, American Iron and Steel Institute, AL [M]
Peter J. Willse, GE Global Asset Protection Services, CT [I]

Alternates

Delbert F. Boring, Jr., American Iron and Steel Institute, OH [M]
(Alt. to R. J. Wills)
Sam W. Francis, American Forest & Paper Association, PA [M]
(Alt. to K. Sumathipala)
Richard G. Gann, Ph.D., U.S. National Institute of Standards and Technology, MD [RT]
(Alt. to J. R. Lawson)
Peter L. Hunsberger, Armstrong World Industries, Inc., PA [M]
(Alt. to T. W. Fritz)
James K. Lathrop, Koffel Associates, Inc., CT [SE]
(Alt. to W. E. Koffel)
James A. Milke, University of Maryland, MD [SE]
(Alt. to F. W. Mowrer)
Arthur J. Parker, Hughes Associates, Inc., MD [SE]
(Alt. to J. J. Beitel)
David K. Tanaka, FM Global, MA [I]
(Alt. to R. G. Bill, Jr.)
William A. Thornberg, GE Global Asset Protection Services, CT [I]
(Alt. to P. J. Willse)
James J. Urban, Underwriters Laboratories Inc., IL [RT]
(Alt. to W. S. Metes)
Joe Ziolkowski, American Furniture Manufacturers Association, NC [M]
(Alt. to T. H. Talley)

Nonvoting

Robert H. Barker, American Fiber Manufacturers Association, DC [M]
(Alt. to T. L. Jilg)
Tod L. Jilg, Hoechst Celanese Corporation, NC [M]
Rep. American Fiber Manufacturers Association
Rohit Khanna, U.S. Consumer Product Safety Commission, MD [C]
Herman H. Spaeth, Novato, CA
(Member Emeritus)

Steven E. Younis, NFPA Staff Liaison

This list represents the membership at the time the Committee was balloted on the final text of this edition. Since that time, changes in the membership may have occurred. A key to classifications is found at the back of the document.

NOTE: Membership on a committee shall not in and of itself constitute an endorsement of the Association or any document developed by the committee on which the member serves.

Committee Scope: This Committee shall have primary responsibility for documents on fire testing procedures, for reviewing existing fire test standards and recommending appropriate action to NFPA, for recommending the application of and advising on the interpretation of acceptable test standards for fire problems of concern to NFPA technical committees and members, and for acting in a liaison capacity between NFPA and the committees of other organizations writing fire test standards. This Committee does not cover fire tests that are used to evaluate extinguishing agents, devices, or systems.

Copyright National Fire Protection Association
Provided by IHS under license with NFPA
No reproduction or networking permitted without license from IHS
Not for Resale

Contents

Chapter 1 Administration **261–** 4
1.1 Scope **261–** 4
1.2 Purpose **261–** 4
1.3 Application **261–** 4
1.4 Summary of Method **261–** 4

Chapter 2 Referenced Publications (Reserved) **261–** 4

Chapter 3 Definitions **261–** 4
3.1 General **261–** 4
3.2 NFPA Official Definitions **261–** 5
3.3 General Definitions **261–** 5

Chapter 4 Test Apparatus **261–** 5
4.1 Mock-Ups **261–** 5
4.2 Ignition Sources **261–** 5
4.3 Sheeting Material **261–** 6
4.4 Test Area **261–** 6
4.5 Extinguishing Equipment **261–** 6
4.6 Miscellaneous **261–** 6

Chapter 5 Conditioning **261–** 6
5.1 General **261–** 6

Chapter 6 Test Specimens **261–** 6
6.1 General **261–** 6
6.2 Loose Seat Cushions **261–** 6
6.3 Decks **261–** 6
6.4 Tight Seat **261–** 6
6.5 Side and Back Panels **261–** 6
6.6 Bolsters **261–** 6
6.7 Tops of Armrests and Backs **261–** 6

Chapter 7 Testing Procedures **261–** 7
7.1 Mock-Up Test Sample **261–** 7
7.2 Cigarette Locations **261–** 7
7.3 Crevice Location **261–** 7
7.4 Test Cigarette **261–** 7
7.5 Seat Cushion **261–** 7
7.6 Number of Test Cigarettes **261–** 7
7.7 Test Acceptance **261–** 7
7.8 Ignition **261–** 7
7.9 Char Length Measurement **261–** 7
7.10 Testing Environment **261–** 7

Chapter 8 Safety Precautions **261–** 7
8.1 Test Termination **261–** 7
8.2 Exposure **261–** 8

Chapter 9 Reporting **261–** 8
9.1 Reporting **261–** 8

Annex A Explanatory Material **261–** 8

Annex B Commentary **261–** 8

Annex C Informational References **261–** 8

Index **261–** 9

Copyright National Fire Protection Association
Provided by IHS under license with NFPA
No reproduction or networking permitted without license from IHS
Not for Resale

NFPA 261

Standard Method of

Test for Determining Resistance of Mock-Up Upholstered Furniture Material Assemblies to Ignition by Smoldering Cigarettes

2003 Edition

IMPORTANT NOTE: This NFPA document is made available for use subject to important notices and legal disclaimers. These notices and disclaimers appear in all publications containing this document and may be found under the heading "Important Notices and Disclaimers Concerning NFPA Documents." They can also be obtained on request from NFPA or viewed at www.nfpa.org/disclaimers.

NOTICE: An asterisk (*) following the number or letter designating a paragraph indicates that explanatory material on the paragraph can be found in Annex A.

Information on referenced publications can be found in Chapter 2 and Annex C.

Chapter 1 Administration

1.1 Scope.

1.1.1 This test shall apply to upholstered furniture mock-ups.

1.1.2 Mock-up testing is used in assessing the relative resistance to continuing combustion of individual materials used in furniture, such as cover fabrics, filling materials, and welt tape, in realistic combinations and in an ideal geometric arrangement of the seat cushions, back, and arms of furniture items.

1.2 Purpose. This test method is designed to evaluate the ignition resistance of upholstered furniture when exposed to smoldering cigarettes under specified conditions.

1.3 Application.

1.3.1 This method is intended to measure the performance of upholstered furniture under conditions of exposure to a smoldering cigarette, which shall be accomplished by testing furniture mock-ups.

1.3.2 This method shall not be used to measure the performance of upholstered furniture under conditions of open flame exposure and does not indicate whether the furniture will resist the propagation of flame under severe fire exposure or when tested in a manner that differs substantially from this test standard.

1.3.3 The results obtained with a material assembly that is tested in mock-up using this method shall not necessarily indicate the performance of the same material assembly in other geometric configurations.

1.4 Summary of Method.

1.4.1 The test shall use lighted cigarettes covered with a piece of sheeting material to determine the ignition resistance of upholstered furniture items reproduced in mock-up.

1.4.2 Locations to be tested shall include the following:

(1) Horizontal crevices formed where seat cushions and vertical test panels meet
(2) Seat cushion surfaces including smooth surface, quilt, tuft, and welt edges
(3) Top surfaces of armrests, back, and loose seat support systems as shown in Figure 1.4.2(a) and Figure 1.4.2(b)

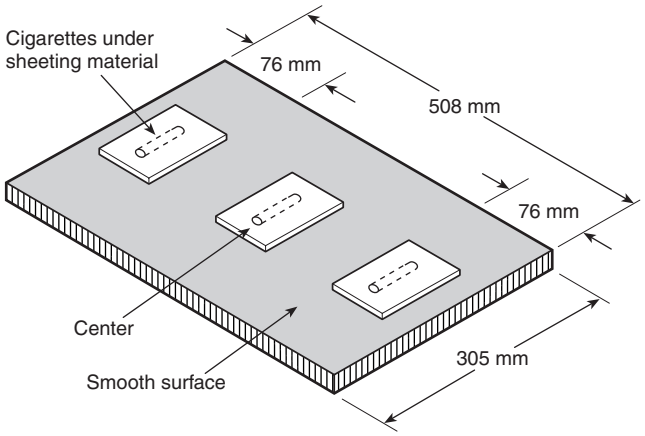

FIGURE 1.4.2(a) Upholstered Furniture Mock-Up Test: Armrest, Top of Back, and Seat Support System.

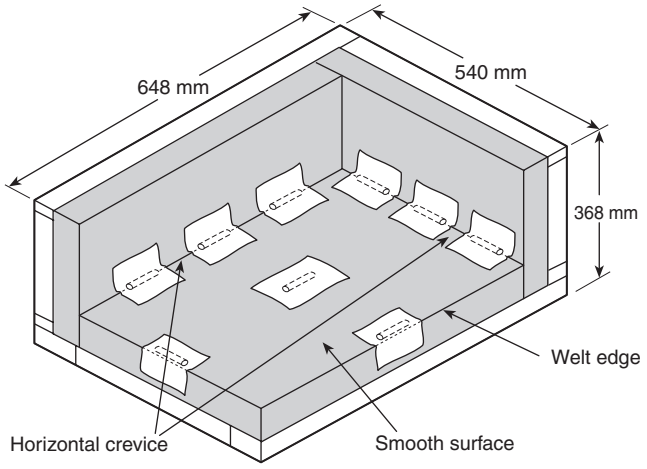

FIGURE 1.4.2(b) Upholstered Furniture Mock-Up Test: Seat Cushion, Side, and Back.

1.4.3 Obvious ignitions or char length measurements shall be used to determine if a particular combination of upholstering materials meets test criteria.

Chapter 2 Referenced Publications (Reserved)

Chapter 3 Definitions

3.1 General. The definitions contained in this chapter shall apply to the terms used in this standard. Where terms are not included, common usage of the terms shall apply.

Copyright National Fire Protection Association
Provided by IHS under license with NFPA
No reproduction or networking permitted without license from IHS
Not for Resale

3.2 NFPA Official Definitions.

3.2.1 Shall. Indicates a mandatory requirement.

3.2.2 Should. Indicates a recommendation or that which is advised but not required.

3.2.3 Standard. A document, the main text of which contains only mandatory provisions using the word "shall" to indicate requirements and which is in a form generally suitable for mandatory reference by another standard or code or for adoption into law. Nonmandatory provisions shall be located in an appendix or annex, footnote, or fine-print note and are not to be considered a part of the requirements of a standard.

3.3 General Definitions.

3.3.1 Bolsters. Pillows or similarly shaped units containing upholstery material covered by upholstery cover material, which might or might not be attached to the upholstered furniture item but are sold and delivered with it.

3.3.2 Char. Carbonaceous material formed by pyrolysis or incomplete combustion.

3.3.3 Deck. The upholstered support under the seat cushion in a loose seat construction.

3.3.4 Furniture Mock-Up. A representation of production furniture that uses the same upholstery cover material and upholstery material, assembled in the same manner as in production furniture but with straight, vertical sides.

3.3.5 Quilted. Fused or stitched with thread through the upholstery cover material and through one or more layers of upholstery material.

3.3.6 Tufted. Buttoned or laced through the upholstery cover material and through the upholstery material.

3.3.7 Upholstered Furniture. For the purpose of this test method, a unit of interior furnishing that has any surface covered, in whole or in part, with a fabric or related upholstery cover material, contains upholstery material, and is intended or promoted for sitting or reclining.

3.3.8 Upholstery Cover Material. The outermost layer of fabric or related material used to enclose the main support system, upholstery materials, or both, used in a furniture item.

3.3.9* Upholstery Material. The padding, stuffing, or filling material used in a furniture item, which can be either loose or attached, enclosed by an upholstery cover material, or located between the upholstery cover material and support system, if present.

3.3.10 Welt. The cord or piping sewn into the seam or border edge of a cushion, pillow, arm, or back of a furniture item.

Chapter 4 Test Apparatus

4.1* Mock-Ups. Mock-up elements for the mock-up test jigs shall be constructed as illustrated in Figure 4.1(a), Figure 4.1(b), and Figure 4.1(c).

4.2 Ignition Sources.

4.2.1 The ignition sources for the test shall be cigarettes without filter tips, made from natural tobacco, 85 mm ± 2 mm long with a packing density of 0.270 g/cm^3 ± 0.020 g/cm^3 and a total weight of 1.1 g ± 0.1 g.

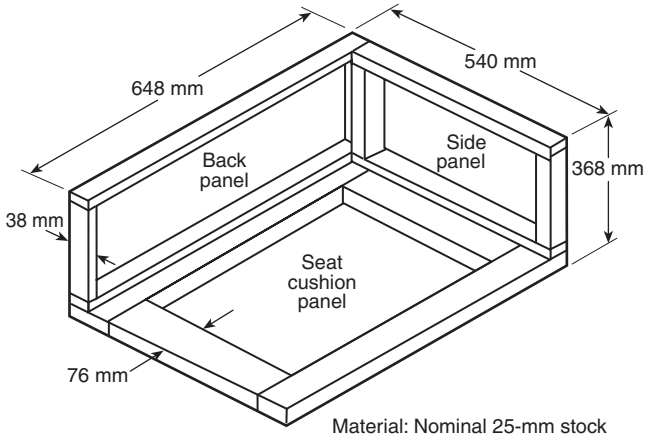

FIGURE 4.1(a) Frame for Upholstered Furniture Mock-Up Test.

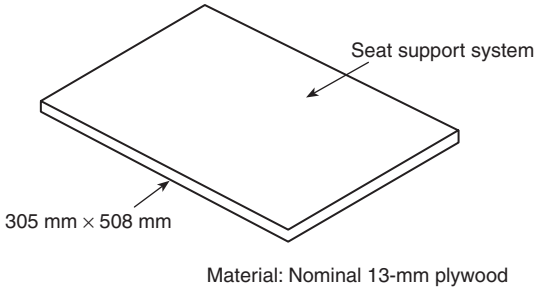

FIGURE 4.1(b) Armrest and Top of Back Mock-Up Test.

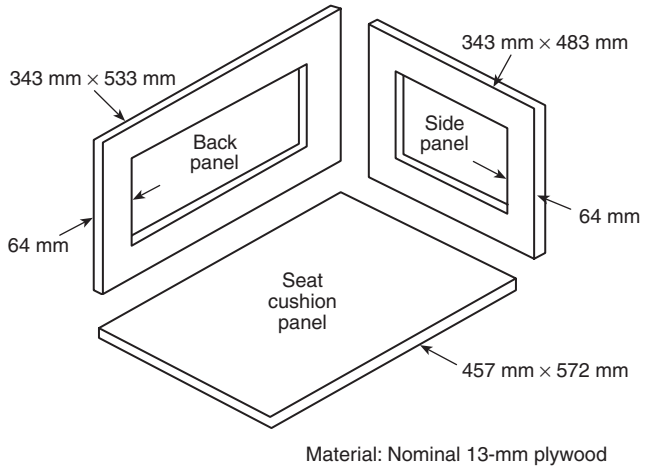

FIGURE 4.1(c) Panels for Upholstered Furniture Mock-Up Test.

--`,,,-`-`,,`,,`,`,,`---
Copyright National Fire Protection Association
Provided by IHS under license with NFPA
No reproduction or networking permitted without license from IHS
Not for Resale

4.2.2* The smoldering rate of each cigarette shall be 0.10 mm/sec ± 0.01 mm/sec when the cigarette is allowed to burn downward in a draft-protected area.

4.3 Sheeting Material.

4.3.1 The sheeting material used to cover the test cigarettes shall be 50 percent cotton/50 percent polyester or 100 percent cotton bed sheeting material, and shall weigh 125 g/m^2 ± 28 g/m^2.

4.3.2 The material shall be laundered in an automatic home clothes washing machine and dried in a tumble dryer at least once before use.

4.3.3 For testing, the sheeting material shall be cut into pieces approximately 125 mm × 125 mm.

4.4 Test Area. The test room shall be draft-protected and equipped with a system for exhausting smoke and noxious gases produced during testing.

4.5 Extinguishing Equipment.

4.5.1 A pressurized water fire extinguisher or other fire extinguishing equipment shall be immediately available.

4.5.2 A water bottle fitted with a spray nozzle shall be provided to extinguish any ignited portions of the mock-up.

4.5.3 A bucket of water shall be provided for immersing smoldering or burning materials removed from the mock-up.

4.6 Miscellaneous. Other apparatus required to carry out the testing shall include the following: straight pins, a knife or scissors, tongs, and a linear scale at least 150 mm long and graduated in millimeter divisions.

Chapter 5 Conditioning

5.1 General. Test samples, cigarettes, and sheeting material shall be conditioned at a temperature of 23°C ± 5°C and at a relative humidity of 50 percent ± 5 percent for at least 48 hours immediately prior to testing.

5.1.1 If the test room conditions do not meet the specifications stated in Section 5.1, then testing shall be initiated within 10 minutes after the materials are removed from the conditioned room.

5.1.2 The mock-up assembly shall be constructed in the conditioned area.

Chapter 6 Test Specimens

6.1 General.

6.1.1 Furniture mock-ups shall be created by arranging upholstery cover material and upholstery materials in the same sequence in which they are used in production furniture.

6.1.2 The various parts of the mock-up shall be constructed as described in Sections 6.2 through 6.7.

6.1.3 In all cases, the arrangement and thickness of upholstery material in the mock-up shall reproduce the construction details of production furniture.

6.2 Loose Seat Cushions.

6.2.1 Seat cushions shall be made in the same size and manner and with the same materials as production furniture.

6.2.2 Cushions 680 mm × 550 mm shall be permitted to be used if production furniture cushion dimensions exceed these values.

6.2.3 The cushion thickness shall be a maximum of 130 mm.

6.3 Decks.

6.3.1 Decks shall be prepared, if they are part of the furniture item, by attaching the same materials with the same thickness as used in actual furniture construction to the horizontal panel of the test apparatus, as shown in Figure 4.1(b).

6.3.2 The decking or the upholstery cover material shall be stretched over the upholstery materials and securely fastened to the underside of the wood panel.

6.4 Tight Seat.

6.4.1 If a furniture item is constructed with tight seats only, then the seat shall be duplicated for test in mock-up.

6.4.2 Tight seat cushions shall be made 450 mm ± 50 mm × 550 mm ± 50 mm and with the same fabric and the same thickness used in production furniture.

6.4.3 The cushion assembly shall be attached to the horizontal panel of the test apparatus, as shown in Figure 4.1(c), by extending the upholstery cover material around the panel edges and fastening the cover material to the underside of the wood panel.

6.5 Side and Back Panels.

6.5.1 A mock-up of furniture sides and back shall be constructed if, in the type of furniture to be represented by the mock-up, the sides and back are located within 25 mm of a seat cushion.

6.5.2 Mock-ups shall be made by upholstering one surface of the vertical test panel as shown in Figure 4.1(c), with the same upholstery material and upholstery cover material used in production furniture.

6.5.3 The upholstery cover material shall be stretched over the upholstery material and fastened to the back side of the framework.

6.5.4 All edges of the panels shall be covered with upholstery cover material.

6.5.5 If the side panel and back panel constructions of the furniture item are the same, only one vertical panel shall be required to be assembled and tested.

6.6 Bolsters. In cases where bolsters resting on the seat cushion or suspended above it could confine the heat from the cigarette and create a spatial arrangement that differs from the crevice space found in production furniture, a mock-up bolster shall be prepared with dimensions that fit into the mock-up to create the same spatial arrangement for the cigarette as in production furniture.

6.7 Tops of Armrests and Backs.

6.7.1 Tops of armrests and backs shall be tested if they present a surface large enough and so oriented as to support a cigarette and the construction differs in any way from the side panel and back panel constructions.

6.7.2 Mock-ups of tops of armrests and backs shall be made by upholstering a piece of 13-mm thick plywood, approximately 300 mm × 500 mm, with the same materials used in the furniture item.

6.7.3 The mock-up shall reproduce significant details of the construction of full-size furniture.

--`,,`-`-`,,`,,`,`,,`---

Copyright National Fire Protection Association
Provided by IHS under license with NFPA
No reproduction or networking permitted without license from IHS
Not for Resale

Chapter 7 Testing Procedures

7.1 Mock-Up Test Sample.

7.1.1 A mock-up test sample shall be assembled by attaching the side panel, back panel, or both, to the mock-up frame and placing a seat cushion, either loose or tight seat construction, against the panels as shown in Figure 1.4.2(b).

7.1.2 The assembly shall be permitted to be placed on a table or platform in the test area and shall be under an exhaust hood or other means for exhausting the products of combustion from testing.

7.1.3 The decks for loose cushion items, tops of armrests, and tops of backs shall be tested separately.

7.2 Cigarette Locations.

7.2.1 At least three cigarettes shall be burned on each surface location as shown in Figure 1.4.2(a) and Figure 1.4.2(b).

7.2.2 These locations shall include the crevice(s) where seat cushions and vertical panels meet; seat cushion surfaces, including welt and smooth, quilted, or tufted areas; top of upholstered armrest; and tops of upholstered back and deck.

7.3 Crevice Location.

7.3.1 For crevice locations, the two cigarettes on either side of the center cigarette shall be placed in the crevice so that their butt ends burn out at least 75 mm from the outermost edge of the side of the back panel.

7.3.2 The cigarettes shall be placed horizontally.

7.3.3 Two of the three cigarettes shall be placed so that their entire length burns out against the welt cord and the vertical panel surface.

7.3.4 The third cigarette shall be placed so that its entire length burns out against the welt cord and a horizontal surface of the seat cushion.

7.4 Test Cigarette.

7.4.1 Each test cigarette shall be well-lighted and burned not more than 4 mm when placed at a specific test location.

7.4.2 After placement, each cigarette shall be covered with a piece of sheeting material.

7.4.3 For crevice tests, one end of the sheeting material shall be pinned to the vertical panels approximately 50 mm above the cigarette and the remaining material dropped to completely cover the test cigarette.

7.4.4 For all tests, sheeting material-to-cigarette contact shall be ensured by running a finger across the full length of the covered cigarette.

7.5 Seat Cushion.

7.5.1 For the test of either loose or tight seat cushions, three covered cigarettes shall be burned on each different surface location encountered.

7.5.2 For the purposes of this test, smooth surfaces, welt edges, fused or threaded portions of quilts, and tuft depressions shall be considered different surface locations on a seat cushion.

7.5.3 Test cigarettes shall be arranged so that the butt ends burn out on the threads of a quilt or in tuft depressions.

7.5.4 The smooth surface of a quilted or tufted cushion shall not be required to be tested.

7.5.5 For smooth surface cushions, the test cigarettes shall be burned in the center of the cushion.

7.6 Number of Test Cigarettes.

7.6.1 Three test cigarettes shall be burned on each horizontal mock-up test panel duplicating armrests, tops of backs, and seat cushion support systems.

7.6.2 One cigarette shall be burned at the center of the panel and the other two shall be burned at least 75 mm from the edges of the test panel as shown in Figure 1.4.2(a) for the location of the cigarettes on the test panels.

7.7 Test Acceptance. A test at any location shall be considered complete if any of the following occurs:

(1) Three cigarettes in a given location have burned their full lengths without sustained ignition.
(2) Three cigarettes in a given location have self-extinguished before burning their full lengths.
(3) Three cigarettes in a given location sustained ignition.

7.8 Ignition.

7.8.1 If obvious ignition occurs, the test shall be stopped and the burning material extinguished.

7.8.2 The test room shall be ventilated and an ignition shall be recorded for the cigarette test location.

7.9 Char Length Measurement.

7.9.1 If the cigarette burns to completion at a test location, the maximum char length in any direction of any material shall be measured from the point nearest to the original location of the cigarette.

7.9.2 Cigarette Ignition Results.

7.9.2.1 The char length measurement for each cigarette shall be recorded, except when the cigarette has extinguished without burning to completion or where obvious combustion occurs.

7.9.2.2 If the char from one cigarette runs into the char from another, the results of the test shall be invalid and the test shall be repeated, burning one cigarette at a time.

7.9.2.3 All mock-ups shall be disassembled after testing is complete.

7.9.2.3.1 If when disassembling the apparatus, it is determined that smoldering is still in progress, the test shall be invalid and shall be repeated.

7.10 Testing Environment. The test shall be carried out in a draft-protected area. The maximum airflow across the sample face shall be less than 15.2 m/min.

Chapter 8 Safety Precautions

8.1 Test Termination.

8.1.1 A test shall be stopped as soon as continuing combustion has definitely occurred.

CAUTION: Even under the most carefully observed conditions, smoldering combustion can progress to a point where it cannot be readily extinguished.

8.1.2 The exposed area shall be immediately wetted with a water spray from the water bottle, the charred or burned material shall be removed, and the material shall be immersed in a bucket of water.

--`,,,-`-`,,`,,`,`,,`---

Copyright National Fire Protection Association
Provided by IHS under license with NFPA
No reproduction or networking permitted without license from IHS
Not for Resale

8.1.3 The test area shall be ventilated.

8.2* Exposure.

8.2.1 Test personnel shall avoid exposure to smoke and gases produced during testing as much as possible.

8.2.2 A large hood with a low air velocity shall be permitted to be in operation during testing to remove products of combustion.

Chapter 9 Reporting

9.1 Reporting.

9.1.1 The maximum char distance measured to the nearest 5 mm from the center of the original location of the test cigarette shall be recorded for each cigarette location.

9.1.2 When obvious ignition occurs, an ignition shall be recorded for the test location.

Annex A Explanatory Material

Annex A is not a part of the requirements of this NFPA document but is included for informational purposes only. This annex contains explanatory material, numbered to correspond with the applicable text paragraphs.

A.3.3.9 Upholstery Material. This definition includes, but is not limited to, material such as foam, cotton batting, polyester fiberfill, bonded cellulose, or down.

A.4.1 Figure 1.4.2(a) and Figure 1.4.2(b) show the completed mock-up assemblies.

A.4.2.2 With the cigarette supported at the bottom in a vertical position, the burning rate is determined in the region of 10 mm to 50 mm measured from the top.

A.8.2 Products of combustion can be physically irritating and dangerous to test personnel.

Annex B Commentary

This annex is not a part of the requirements of this NFPA document but is included for informational purposes only.

B.1 Introduction. The test for determining the smoldering cigarette ignition resistance of mock-up furniture material assemblies was developed by the National Bureau of Standards with the cooperation of various industry groups and individuals. The work was done in response to data indicating that cigarette ignition of upholstered furniture is a major cause of life loss due to fire in the United States.

B.2 Nature of Test.

B.2.1 Upholstered furniture consists of upholstery cover fabric and interior filling/padding components such as foam, polyester, or cotton batting. Often a welt cord is attached to the pillow and other edges of the upholstery. These materials are arranged in complex geometrical forms, including flat, tufted, convex, concave, and horizontal and vertical surfaces. Both the combination of fabric and filling/padding materials and their geometrical arrangement affect their propensity to ignite when exposed to burning cigarettes.

B.2.2 Originally, an attempt was made to develop separate tests for each of the component materials: fabric, filling/padding, and welt cord. It soon became obvious that there was considerable interaction among these components, and it was decided that they would have to be tested in the combination in which they would be used in actual furniture. However, to avoid the cost and effort required to build prototype furniture for each combination of materials, the test is limited to a simple mock-up of the seating surface and vertical members, with the fabric, filling/padding, and welt cord arranged as in the proposed construction of actual furniture.

B.3 Experimental Studies. In a controlled study, the relationship between the results of the mock-up test and the performance of actual furniture was shown to be very close. Thirty-eight locations in both mock-up and full-size chairs were tested in each of three laboratories for a total of 114 tests. Fourteen out of 114 test locations provided different results for the mock-up than for the actual item of furniture. There was 87 percent agreement.

B.4 Agreement Between Laboratories. In a controlled study, the percentage of agreement between laboratories was high. More than 2200 tests were conducted on mock-ups in 38 laboratories. One-hundred twenty-six test results differed from the majority. There was 94 percent agreement. For additional information, see NBSIR, PFF8.76, *Back-Up Report for the Proposed Standard for the Flammability (Cigarette Ignition Resistance) of Upholstered Furniture.*

Annex C Informational References

C.1 Referenced Publications. The following documents or portions thereof are referenced within this standard for informational purposes only and are thus not part of the requirements of this document unless also listed in Chapter 2.

C.1.1 NFPA Publications. (Reserved)

C.1.2 Other Publications.

C.1.2.1 NTIS Publication. National Technical Information Service, Springfield, VA 22161.

NBSIR, PFF8.76, *Back-Up Report for the Proposed Standard for the Flammability (Cigarette Ignition Resistance) of Upholstered Furniture*, Joseph J. Loftus, Final Report, June 1978.

C.2 Informational References. (Reserved)

C.3 References for Extracts. (Reserved)

--`,,,-`-`,,`,,`,`,,`---

Copyright National Fire Protection Association
Provided by IHS under license with NFPA
No reproduction or networking permitted without license from IHS
Not for Resale

Index

© 2003 National Fire Protection Association. All Rights Reserved.

The copyright in this index is separate and distinct from the copyright in the document that it indexes. The licensing provisions set forth for the document are not applicable to this index. This index may not be reproduced in whole or in part by any means without the express written permission of NFPA.

-A-

Application of standard 1.3
Armrests and backs, tops of
Test apparatus ..... Fig. 1.4.2(a), Fig. 4.1(b)
Test procedure 7.1.3, 7.2.2, 7.6.1, 7.6.2
Test specimens 6.7

-B-

Back panels .....*see* Side and back panels
Bolsters
Definition 3.3.1
Test specimens 6.6

-C-

Char
Definition 3.3.2
Length measurement 7.9, 9.1
Cigarettes 7.4
Behavior in test 7.7
Bolsters, tests for 6.6
Conditioning 5.1
Ignition of 4.2, 7.7, 7.9.2, A.4.2
Locations for test 7.2, 7.3, 7.8.2, 9.1
Number for test 7.6
Conditioning ..... Chap. 5
Crevice tests
Locations of crevices 7.3
Test cigarettes, placement of 7.4.3

-D-

Decks
Definition 3.3.3
Test procedure 7.1.3
Test specimens 6.3
Definitions ..... Chap. 3

-E-

Experimental studies, testing procedure B.3
Extinguishing equipment, test apparatus 4.5

-F-

Furniture mock-ups 4.1
Conditioning 5.1
Construction of ..... Chap. 6
Definition 3.3.4
Disassembling 7.9.2.3
Test procedures ..... Chap. 7

-I-

Ignition
Of cigarettes .....*see* Cigarettes
Of furniture mock-up 7.8
Sources, for test apparatus 4.2, A.4.2
Invalid test results 7.0.2.3, 7.9.2.3.1

-L-

Laboratories, agreement between B.4
Loose seat cushions
Test procedure 7.1.1, 7.1.3, 7.5
Test specimens 6.2

-M-

Mock-ups, furniture .....*see* Furniture mock-ups

-N-

National Bureau of Standards B.1

-P-

Panels .....*see* Side and back panels
Personnel safety 8.2, A.8.2
Purpose of standard 1.2

-Q-

Quilted (upholstery)
Definition 3.3.5
Test procedure ..... 7.2.2, 7.5.2 to 7.5.4

-R-

References ..... Annex C
Reporting ..... Chap. 9

-S-

Safety precautions ..... Chap. 8
Scope of standard 1.1
Seat cushions
Test procedure ..... Fig. 1.4.2(b), 7.1.1, 7.1.3, 7.2.2, 7.3.4, 7.5
Test specimens 6.2, 6.4
Seat support system ..... Fig. 1.4.2(a), 7.6.1
Shall (definition) 3.2.1
Sheeting material ..... 4.3, 5.1, 7.4.2 to 7.4.4
Should (definition) 3.2.2
Side and back panels
Test apparatus ..... Fig. 4.1(c)
Test procedure ..... Fig. 1.4.2(b), 7.1.1, 7.2.2, 7.3.1, 7.3.3, 7.4.3
Test specimens 6.5
Specimens .....*See* Furniture mock-ups
Standard (definition) 3.2.3
Summary of method 1.4

-T-

Test acceptance 7.7
Test apparatus ..... Chap. 4
Extinguishing equipment 4.5
Ignition sources 4.2, A.4.2
Miscellaneous 4.6
Mock-ups 4.1
Sheeting material 4.3
Test area 4.4
Test area 4.4
Testing environment 7.10
Testing procedures ..... Chap. 7; *see also* Furniture mock-ups
Agreement between laboratories B.4
Cigarette locations 7.2, 7.3, 7.8.2, 9.1
Crevice locations 7.3
Experimental studies B.3

--`,,`-`-`,,`,,`,`,,`---

Copyright National Fire Protection Association
Provided by IHS under license with NFPA
No reproduction or networking permitted without license from IHS
Not for Resale

Mock-up test sample 7.1
Nature of test B.2
Number of test cigarettes 7.6
Seat cushions .....*see* Seat cushions
Test cigarettes, placement of 7.4
Test specimens, construction of ..... Chap. 6
Tight seat cushions
Test procedure 7.1.1, 7.5
Test specimens 6.4
Tops of backs .....*see* Armrests and backs, tops of
Tufted (upholstery)
Definition 3.3.6
Test procedure ..... 7.2.2, 7.5.2 to 7.5.4

-U-

Upholstered furniture (definition) 3.3.7
Upholstery cover material ..... 6.1.1, 6.3.2, 6.4.3, 6.5.2 to 6.5.4
Definition 3.3.8
Upholstery material 6.1.1, 6.1.3, 6.3, 6.5.2
Definition 3.3.9

-W-

Welt
Definition 3.3.10
Test procedure 7.2.2, 7.3.3, 7.3.4, 7.5.2

Copyright National Fire Protection Association
Provided by IHS under license with NFPA
No reproduction or networking permitted without license from IHS
Not for Resale

Sequence of Events Leading to Publication of an NFPA Committee Document

Call goes out for proposals to amend existing document or for recommendations on new document.

▼

Committee meets to act on proposals, to develop its own proposals, and to prepare its report.

▼

Committee votes on proposals by letter ballot. If two-thirds approve, report goes forward. Lacking two-thirds approval, report returns to committee.

▼

Report — *Report on Proposals* (ROP) — is published for public review and comment.

▼

Committee meets to act on each public comment received.

▼

Committee votes on comments by letter ballot. If two-thirds approve, supplementary report goes forward. Lacking two-thirds approval, supplementary report returns to committee.

▼

Supplementary report — *Report on Comments* (ROC) — is published for public review.

▼

NFPA membership meets (Annual or Fall Meeting) and acts on committee report (ROP or ROC).

▼

Committee votes on any amendments to report approved at NFPA Annual or Fall Meeting.

▼

Appeals to Standards Council on Association action must be filed within 20 days of the NFPA Annual or Fall Meeting.

▼

Standards Council decides, based on all evidence, whether or not to issue standard or to take other action, including upholding any appeals.

Committee Membership Classifications

The following classifications apply to Technical Committee members and represent their principal interest in the activity of the committee.

M *Manufacturer:* A representative of a maker or marketer of a product, assembly, or system, or portion thereof, that is affected by the standard.

U *User:* A representative of an entity that is subject to the provisions of the standard or that voluntarily uses the standard.

I/M *Installer/Maintainer:* A representative of an entity that is in the business of installing or maintaining a product, assembly, or system affected by the standard.

L *Labor:* A labor representative or employee concerned with safety in the workplace.

R/T *Applied Research/Testing Laboratory:* A representative of an independent testing laboratory or independent applied research organization that promulgates and/or enforces standards.

E *Enforcing Authority:* A representative of an agency or an organization that promulgates and/or enforces standards.

I *Insurance:* A representative of an insurance company, broker, agent, bureau, or inspection agency.

C *Consumer:* A person who is, or represents, the ultimate purchaser of a product, system, or service affected by the standard, but who is not included in the *User* classification.

SE *Special Expert:* A person not representing any of the previous classifications, but who has a special expertise in the scope of the standard or portion thereof.

NOTES:

1. "Standard" connotes code, standard, recommended practice, or guide.
2. A representative includes an employee.
3. While these classifications will be used by the Standards Council to achieve a balance for Technical Committees, the Standards Council may determine that new classifications of members or unique interests need representation in order to foster the best possible committee deliberations on any project. In this connection, the Standards Council may make such appointments as it seems appropriate in the public interest, such as the classification of "Utilities" in the National Electrical Code Committee.
4. Representatives of subsidiaries of any group are generally considered to have the same classification as the parent organization.

Copyright National Fire Protection Association
Provided by IHS under license with NFPA
No reproduction or networking permitted without license from IHS
Not for Resale

NFPA Technical Committee Document Proposal Form

Note: All proposals must be received by 5:00 p.m. EST/EDST on the published proposal closing date.

For further information on the standards-making process, please contact Codes and Standards Administration at 617-984-7249. For technical assistance, please call NFPA at 617-770-3000.

FOR OFFICE USE ONLY
Log #: _____
Date Rec'd: _____

Please indicate in which format you wish to receive your ROP/ROC: ☐ **CD ROM** ☐ **paper** ☐ **download**
(Note: In choosing the download option you intend to view the ROP/ROC from our Website. No copy will be sent to you.)

Date 12/18/02 **Name** John B. Smith **Telephone** 617-555-1212
Company _____
Address 9 Seattle St. **City** Seattle **State** WA **Zip** 02255
Please indicate organization represented (if any) Fire Marshals Assn. of North America

1. **a) NFPA Document Title** National Fire Alarm Code
   b) NFPA No. & Edition NFPA 72, 2002 ed. **c) Section/Paragraph** 4.4.7.1.1

2. **Proposal Recommends:** *(check one)* ☐ **new text** ☐ **revised text** ☒ **deleted text**

3. **Proposal.** *(Include proposed new or revised wording, or identification of wording to be deleted.)* Note: Proposed text should be in legislative format, that is, use underscore to denote wording to be inserted (inserted wording) and strike-through to denote wording to be deleted (~~deleted wording~~). Delete exception.

4. **Statement of Problem and Substantiation for Proposal.** Note: State the problem that will be resolved by your recommendation. Give the specific reason for your proposal including copies of tests, research papers, fire experience, etc. If more than 200 words, it may be abstracted for publication. A properly installed and maintained system should be free of ground faults. The occurrence of one or more ground faults should be required to cause a "trouble" signal because it indicates a condition that could contribute to future malfunction of the system. Ground fault protection has been widely available on these systems for years and its cost is negligible. Requiring it on all systems will promote better installations, maintenance and reliability.

5. ☒ **This Proposal is Original Material.** Note: Original material is considered to be the submitter's own idea based on or as a result of his/her own experience, thought, or research and, to the best of his/her knowledge, is not copied from another source.

   ☐ **This Proposal is Not Original Material; Its Source** ***(if known)*** **is as Follows:** _____

Sample

I hereby grant the NFPA all and full rights in copyright to this proposal, and I understand that I acquire no rights in any publication of NFPA in which this proposal in this or another similar or analogous form is used.

Signature ***(Required)*** John B. Smith

PLEASE USE SEPARATE FORM FOR EACH PROPOSAL • NFPA FAX (617) 770-3500

Mail to: Secretary, Standards Council • NFPA • 1 Batterymarch Park • PO Box 9101 • Quincy, MA 02269-9101

--`,,,-`-`,,`,,`,`,,`---

Copyright National Fire Protection Association
Provided by IHS under license with NFPA
No reproduction or networking permitted without license from IHS

Not for Resale

NFPA Technical Committee Document Proposal Form

Note: All proposals must be received by 5:00 p.m. EST/EDST on the published proposal closing date.

For further information on the standards-making process, please contact Codes and Standards Administration at 617-984-7249. For technical assistance, please call NFPA at 617-770-3000.

FOR OFFICE USE ONLY
Log #: _____
Date Rec'd: _____

Please indicate in which format you wish to receive your ROP/ROC: ☐ **CD ROM** ☐ **paper** ☐ **download**
(Note: In choosing the download option you intend to view the ROP/ROC from our Website. No copy will be sent to you.)

Date _____ **Name** _____ **Telephone** _____
Company _____
Address _____ **City** _____ **State** _____ **Zip** _____
Please indicate organization represented (if any) _____

1. **a) NFPA Document Title** _____
   b) NFPA No. & Edition _____ **c) Section/Paragraph** _____

2. **Proposal Recommends:** *(check one)* ☐ **new text** ☐ **revised text** ☐ **deleted text**

3. **Proposal.** *(Include proposed new or revised wording, or identification of wording to be deleted.)* Note: Proposed text should be in legislative format, that is, use underscore to denote wording to be inserted (inserted wording) and strike-through to denote wording to be deleted (~~deleted wording~~). _____

4. **Statement of Problem and Substantiation for Proposal.** Note: State the problem that will be resolved by your recommendation. Give the specific reason for your proposal including copies of tests, research papers, fire experience, etc. If more than 200 words, it may be abstracted for publication. _____

5. ☐ **This Proposal is Original Material.** Note: Original material is considered to be the submitter's own idea based on or as a result of his/her own experience, thought, or research and, to the best of his/her knowledge, is not copied from another source.

   ☐ **This Proposal is Not Original Material; Its Source** ***(if known)*** **is as Follows:** _____

I hereby grant the NFPA all and full rights in copyright to this proposal, and I understand that I acquire no rights in any publication of NFPA in which this proposal in this or another similar or analogous form is used.

Signature ***(Required)*** _____

PLEASE USE SEPARATE FORM FOR EACH PROPOSAL • NFPA FAX (617) 770-3500

Mail to: Secretary, Standards Council • NFPA • 1 Batterymarch Park • PO Box 9101 • Quincy, MA 02269-9101

--`,,,-`-`,,`,,`,`,,`---

Copyright National Fire Protection Association
Provided by IHS under license with NFPA
No reproduction or networking permitted without license from IHS

Not for Resale