NFPA 260

Standard Methods of Tests and Classification System for Cigarette Ignition Resistance of Components of Upholstered Furniture

2003 Edition

NFPA, 1 Batterymarch Park, PO Box 9101, Quincy, MA 02269-9101
An International Codes and Standards Organization

NFPA License Agreement

This document is copyrighted by the National Fire Protection Association (NFPA), 1 Batterymarch Park, Quincy, MA 02269-9101 USA.
All rights reserved.

NFPA grants you a license as follows: The right to download an electronic file of this NFPA document for temporary storage on one computer for purposes of viewing and/or printing one copy of the NFPA document for individual use. Neither the electronic file nor the hard copy print may be reproduced in any way. In addition, the electronic file may not be distributed elsewhere over computer networks or otherwise. The hard copy print may only be used personally or distributed to other employees for their internal use within your organization.

Copyright National Fire Protection Association
Provided by IHS under license with NFPA
No reproduction or networking permitted without license from IHS

Not for Resale

IMPORTANT NOTICES AND DISCLAIMERS CONCERNING NFPA DOCUMENTS

NOTICE AND DISCLAIMER OF LIABILITY CONCERNING THE USE OF NFPA DOCUMENTS

NFPA codes, standards, recommended practices, and guides, of which the document contained herein is one, are developed through a consensus standards development process approved by the American National Standards Institute. This process brings together volunteers representing varied viewpoints and interests to achieve consensus on fire and other safety issues. While the NFPA administers the process and establishes rules to promote fairness in the development of consensus, it does not independently test, evaluate, or verify the accuracy of any information or the soundness of any judgments contained in its codes and standards.

The NFPA disclaims liability for any personal injury, property or other damages of any nature whatsoever, whether special, indirect, consequential or compensatory, directly or indirectly resulting from the publication, use of, or reliance on this document. The NFPA also makes no guaranty or warranty as to the accuracy or completeness of any information published herein.

In issuing and making this document available, the NFPA is not undertaking to render professional or other services for or on behalf of any person or entity. Nor is the NFPA undertaking to perform any duty owed by any person or entity to someone else. Anyone using this document should rely on his or her own independent judgment or, as appropriate, seek the advice of a competent professional in determining the exercise of reasonable care in any given circumstances.

The NFPA has no power, nor does it undertake, to police or enforce compliance with the contents of this document. Nor does the NFPA list, certify, test or inspect products, designs, or installations for compliance with this document. Any certification or other statement of compliance with the requirements of this document shall not be attributable to the NFPA and is solely the responsibility of the certifier or maker of the statement.

--`,,,,-`-`,,`,,`,`,,`---

Copyright National Fire Protection Association
Provided by IHS under license with NFPA
No reproduction or networking permitted without license from IHS

Not for Resale

ADDITIONAL NOTICES AND DISCLAIMERS

Updating of NFPA Documents

Users of NFPA codes, standards, recommended practices, and guides should be aware that these documents may be superseded at any time by the issuance of new editions or may be amended from time to time through the issuance of Tentative Interim Amendments. An official NFPA document at any point in time consists of the current edition of the document together with any Tentative Interim Amendments and any Errata then in effect. In order to determine whether a given document is the current edition and whether it has been amended through the issuance of Tentative Interim Amendments or corrected through the issuance of Errata, consult appropriate NFPA publications such as the National Fire Codes® Subscription Service, visit the NFPA website at www.nfpa.org, or contact the NFPA at the address listed below.

Interpretations of NFPA Documents

A statement, written or oral, that is not processed in accordance with Section 6 of the Regulations Governing Committee Projects shall not be considered the official position of NFPA or any of its Committees and shall not be considered to be, nor be relied upon as, a Formal Interpretation.

Patents

The NFPA does not take any position with respect to the validity of any patent rights asserted in connection with any items which are mentioned in or are the subject of NFPA codes, standards, recommended practices, and guides, and the NFPA disclaims liability for the infringement of any patent resulting from the use of or reliance on these documents. Users of these documents are expressly advised that determination of the validity of any such patent rights, and the risk of infringement of such rights, is entirely their own responsibility.

NFPA adheres to applicable policies of the American National Standards Institute with respect to patents. For further information contact the NFPA at the address listed below.

Law and Regulations

Users of these documents should consult applicable federal, state, and local laws and regulations. NFPA does not, by the publication of its codes, standards, recommended practices, and guides, intend to urge action that is not in compliance with applicable laws, and these documents may not be construed as doing so.

Copyrights

This document is copyrighted by the NFPA. It is made available for a wide variety of both public and private uses. These include both use, by reference, in laws and regulations, and use in private self-regulation, standardization, and the promotion of safe practices and methods. By making this document available for use and adoption by public authorities and private users, the NFPA does not waive any rights in copyright to this document.

Use of NFPA documents for regulatory purposes should be accomplished through adoption by reference. The term "adoption by reference" means the citing of title, edition, and publishing information only. Any deletions, additions, and changes desired by the adopting authority should be noted separately in the adopting instrument. In order to assist NFPA in following the uses made of its documents, adopting authorities are requested to notify the NFPA (Attention: Secretary, Standards Council) in writing of such use. For technical assistance and questions concerning adoption of NFPA documents, contact NFPA at the address below.

For Further Information

All questions or other communications relating to NFPA codes, standards, recommended practices, and guides and all requests for information on NFPA procedures governing its codes and standards development process, including information on the procedures for requesting Formal Interpretations, for proposing Tentative Interim Amendments, and for proposing revisions to NFPA documents during regular revision cycles, should be sent to NFPA headquarters, addressed to the attention of the Secretary, Standards Council, NFPA, 1 Batterymarch Park, P.O. Box 9101, Quincy, MA 02269-9101.

For more information about NFPA, visit the NFPA website at www.nfpa.org.

Copyright National Fire Protection Association
Provided by IHS under license with NFPA
No reproduction or networking permitted without license from IHS
Not for Resale

Copyright © 2003, National Fire Protection Association, All Rights Reserved

NFPA 260

Standard Methods of

Tests and Classification System for Cigarette Ignition Resistance of Components of Upholstered Furniture

2003 Edition

This edition of NFPA 260, *Standard Methods of Tests and Classification System for Cigarette Ignition Resistance of Components of Upholstered Furniture*, was prepared by the Technical Committee on Fire Tests and acted on by NFPA at its May Association Technical Meeting held May 18–21, 2003, in Dallas, TX. It was issued by the Standards Council on July 18, 2003, with an effective date of August 7, 2003, and supersedes all previous editions.

This edition of NFPA 260 was approved as an American National Standard on July 18, 2003.

Origin and Development of NFPA 260

Regulation of the manufacture of furniture has been a subject of research and debate since 1967, when the Flammable Fabrics Act was amended by Congress to include products in addition to wearing apparel and home textiles that might constitute an unreasonable flammability risk. The National Bureau of Standards (NBS) began funding laboratory research on the subject in 1968. With its formation in 1973, the U.S. Consumer Product Safety Commission (CPSC) became the government agency responsible for administration of the Flammable Fabrics Act, including the adoption of any program or standard regulating upholstered furniture. NBS retained responsibility for designing test methods related to flammable fabrics.

In 1976, NBS submitted a draft to the CPSC for a proposed cigarette ignition resistance standard for upholstered furniture. Shortly thereafter, however, the CPSC was reorganized into separate program areas, followed by nearly a year's worth of study on its children's sleepwear standards, which was prompted by findings that a chemical used in sleepwear to make it flame-retardant might be carcinogenic. In November 1978, the CPSC staff, after modifying the originally proposed NBS standard on upholstered furniture, recommended to the CPSC commissioners that they publish the proposed standard.

In December 1978, at an informal meeting during which the CPSC asked that comments be submitted before publishing the final version of the standard, the upholstered furniture industry proposed its own voluntary program, the Upholstered Furniture Action Council (UFAC) Voluntary Action Program.

The UFAC voluntary program was adopted in April 1979. The 1983 edition of this standard (then NFPA 260A) was developed subsequent to that date by the Technical Committee on Fire Tests and drew heavily on the UFAC test method for components of upholstered furniture. The 1986 edition brought the document into substantial agreement with the UFAC test method. The 1989 edition was renumbered as NFPA 260 and included refinements for further agreement with the UFAC test method.

The 1994 edition of this standard provided further refinements that reflected minor changes and editorial clarification. Those changes involved current definitions and technology used within the upholstered furniture industry.

The 1998 edition added a clarification defining the pretest cigarette burn length.

For the 2003 edition, the chapter layout of NFPA 260 has been reorganized to meet the NFPA *Manual of Style*.

--`,,`,`-`-`,,`,,`,`,,`---

Copyright National Fire Protection Association
Provided by IHS under license with NFPA
No reproduction or networking permitted without license from IHS

Not for Resale

Technical Committee on Fire Tests

William E. Fitch, *Chair*
Omega Point Laboratories Inc., TX [RT]

Patty K. Adair, American Textile Manufacturers Institute Inc., DC [M]
Jesse J. Beitel, Hughes Associates, Inc., MD [SE]
April L. Berkol, Starwood Hotels & Resorts Worldwide, Inc., NY [U]
Rep. American Hotel & Lodging Association
Robert G. Bill, Jr., FM Global, MA [I]
John A. Blair, The Dupont Company, DE [M]
Rep. Society of the Plastics Industry Inc.
Gordon H. Damant, Inter-City Testing & Consulting Corp. of California, CA [SE]
Thomas W. Fritz, Armstrong World Industries Inc., PA [M]
James R. Griffith, Southwest Research Institute, TX [RT]
Gordon E. Hartzell, Hartzell Consulting, Inc., TX [SE]
Marcelo M. Hirschler, GBH International, CA [SE]
Alfred J. Hogan, Reedy Creek Improvement District, FL [E]
Rep. International Fire Marshals Association
William E. Koffel, Koffel Associates, Inc., MD [SE]
James R. Lawson, U.S. National Institute of Standards & Technology, MD [RT]
Rodney A. McPhee, Canadian Wood Council, Canada [M]
William S. Metes, Underwriters Laboratories Inc., IL [RT]
Frederick W. Mowrer, University of Maryland, MD [SE]
Nigel R. Stamp, Intertek Testing Services NA, Inc., WI [RT]
Phil M. Stricklen, American Fibers and Yarns Company, GA [M]
Kuma Sumathipala, American Forest & Paper Association, DC [M]
T. Hugh Talley, Hugh Talley Company, TN [M]
Rep. Upholstered Furniture Action Council
Rick Thornberry, The Code Consortium, Inc., CA [SE]
William A. Webb, Performance Technology Consulting, Ltd., IL [SE]
Robert A. Wessel, Gypsum Association, DC [M]
Robert J. Wills, American Iron and Steel Institute, AL [M]
Peter J. Willse, GE Global Asset Protection Services, CT [I]

Alternates

Delbert F. Boring, Jr., American Iron and Steel Institute, OH [M]
(Alt. to R. J. Wills)
Sam W. Francis, American Forest & Paper Association, PA [M]
(Alt. to K. Sumathipala)
Richard G. Gann, Ph.D., U.S. National Institute of Standards & Technology, MD [RT]
(Alt. to J. R. Lawson)
Peter L. Hunsberger, Armstrong World Industries, Inc., PA [M]
(Alt. to T. W. Fritz)
James K. Lathrop, Koffel Associates, Inc., CT [SE]
(Alt. to W. E. Koffel)
James A. Milke, University of Maryland, MD [SE]
(Alt. to F. W. Mowrer)
Arthur J. Parker, Hughes Associates, Inc., MD [SE]
(Alt. to J. J. Beitel)
David K. Tanaka, FM Global, MA [I]
(Alt. to R. G. Bill)
William A. Thornberg, GE Global Asset Protection Services, CT [I]
(Alt. to P. J. Willse)
James J. Urban, Underwriters Laboratories Inc., IL [RT]
(Alt. to W. S. Metes)
Joe Ziolkowski, American Furniture Manufacturers Association, NC [M]
(Alt. to T. H. Talley)

Nonvoting

Robert H. Barker, American Fiber Manufacturers Association, DC [M]
(Alt. to T. L. Jilg)
Tod L. Jilg, Hoechst Celanese Corporation, NC [M]
Rep. American Fiber Manufacturers Association
Rohit Khanna, U.S. Consumer Product Safety Commission, MD [C]
Herman H. Spaeth, Novato, CA
(Member Emeritus)

Steven E. Younis, NFPA Staff Liaison

This list represents the membership at the time the Committee was balloted on the final text of this edition. Since that time, changes in the membership may have occurred. A key to classifications is found at the back of the document.

NOTE: Membership on a committee shall not in and of itself constitute an endorsement of the Association or any document developed by the committee on which the member serves.

Committee Scope: This Committee shall have primary responsibility for documents on fire testing procedures, for reviewing existing fire test standards and recommending appropriate action to NFPA, for recommending the application of and advising on the interpretation of acceptable test standards for fire problems of concern to NFPA technical committees and members, and for acting in a liaison capacity between NFPA and the committees of other organizations writing fire test standards. This Committee does not cover fire tests that are used to evaluate extinguishing agents, devices, or systems.

Copyright National Fire Protection Association
Provided by IHS under license with NFPA
No reproduction or networking permitted without license from IHS
Not for Resale

Contents

Chapter 1 Administration **260–** 4
1.1 Scope **260–** 4
1.2 Purpose **260–** 4
1.3 Application **260–** 4
1.4 Test Selection **260–** 4

Chapter 2 Referenced Publications **260–** 4
2.1 General **260–** 4
2.2 NFPA Publications. (Reserved) **260–** 4
2.3 Other Publications **260–** 4

Chapter 3 Definitions **260–** 4
3.1 General **260–** 4
3.2 NFPA Official Definitions **260–** 4
3.3 General Definitions **260–** 5

Chapter 4 Test Apparatus **260–** 5
4.1 Mini-Mock-Up Tester **260–** 5
4.2 Decking Materials Tester **260–** 5
4.3 Ignition Source **260–** 5
4.4 Standard Type I Cover Fabric **260–** 6
4.5 Standard Type II Cover Fabric **260–** 6
4.6 Sheeting Material **260–** 6
4.7 Polyurethane Foam Substrate **260–** 6
4.8 Miscellaneous **260–** 6
4.9 Air Velocity **260–** 6
4.10 Extinguishing Equipment **260–** 6
4.11 Draft Enclosure **260–** 6

Chapter 5 Test Specimens **260–** 6
5.1 Specimen Conditioning **260–** 6
5.2 Cover Fabric Specimen **260–** 6
5.3 Interior Fabric Specimen **260–** 6
5.4 Welt Cord Specimen **260–** 6
5.5 Filling/Padding Component Specimen ... **260–** 6
5.6 Decking Materials Specimen **260–** 7
5.7 Barrier Materials Specimen **260–** 7

Chapter 6 Test Procedures **260–** 7
6.1 Cover Fabric Test **260–** 7
6.2 Interior Fabric Test **260–** 7
6.3 Welt Cord Test **260–** 8
6.4 Filling/Padding Component Test **260–** 9
6.5 Decking Materials Test **260–** 9
6.6 Barrier Materials Test **260–**10

Chapter 7 Cigarette Resistance Classifications **260–**11
7.1 General **260–**11
7.2 Cover Fabric Classification **260–**11
7.3 Interior Fabric Classification **260–**11
7.4 Welt Cord Classification **260–**11
7.5 Filling/Padding Components Classification **260–**11
7.6 Decking Materials Classification **260–**11
7.7 Barrier Materials Classification **260–**11

Chapter 8 Safety Precautions **260–**11
8.1 Combustion **260–**11
8.2 Exposure **260–**11

Chapter 9 Precision and Accuracy **260–**11
9.1 Statement. (Reserved) **260–**11

Annex A Explanatory Material **260–**11

Annex B Commentary **260–**12

Annex C Informational References **260–**13

Index **260–**14

Copyright National Fire Protection Association
Provided by IHS under license with NFPA
No reproduction or networking permitted without license from IHS
Not for Resale

NFPA 260

Standard Methods of

Tests and Classification System for Cigarette Ignition Resistance of Components of Upholstered Furniture

2003 Edition

IMPORTANT NOTE: This NFPA document is made available for use subject to important notices and legal disclaimers. These notices and disclaimers appear in all publications containing this document and may be found under the heading "Important Notices and Disclaimers Concerning NFPA Documents." They can also be obtained on request from NFPA or viewed at www.nfpa.org/disclaimers.

NOTICE: An asterisk (*) following the number or letter designating a paragraph indicates that explanatory material on the paragraph can be found in Annex A.

Information on referenced publications can be found in Chapter 2 and Annex C.

Chapter 1 Administration

1.1 Scope.

1.1.1 The tests described in this document apply to upholstered furniture components that are tested in a standard, defined composite.

1.1.2 These tests shall apply to cover fabrics, interior fabrics, welt cords, decking materials, barrier materials, and filling/padding materials including, but not limited to, battings of natural or man-made fibers, foamed or cellular filling materials, resilient pads of natural or man-made fibers, and loose particulate filling materials such as shredded polyurethane or feathers and down.

1.2 Purpose.

1.2.1 These test methods are designed to evaluate ignition resistance of upholstered furniture when exposed to smoldering cigarettes under specified conditions.

1.2.2 It is the intent of this standard to provide tests to determine whether covered upholstered furniture components such as cover fabrics, welt cords, decking materials, interior fabrics, and filling/padding materials are relatively resistant to ignition by smoldering cigarettes.

1.2.3* This standard establishes a classification system for determining the resistance of upholstered furniture components to cigarette ignition.

1.3 Application.

1.3.1 Tests specified by this standard are intended to measure the performance of upholstered furniture components under conditions of exposure to a smoldering cigarette.

1.3.2 Tests specified by this standard shall not be used to measure the performance of upholstered furniture under conditions of open flame exposure, and do not indicate whether the furniture will resist the propagation of flame under severe fire exposure or when tested in a manner that differs substantially from the test standard.

1.3.3 The test results obtained with a material component tested in a given mock-up, in accordance with this standard, do not necessarily indicate the performance of the same material component in the form of other geometric configurations, such as full-size furniture.

1.3.4 Tests specified by this standard shall be used to measure and describe the response of materials, products, or assemblies to a smoldering cigarette under controlled laboratory conditions, and do not necessarily describe or appraise the fire hazard or fire risk of materials, products, or furniture assemblies under actual fire conditions.

1.3.5 This standard is intended to assist in component selection and composite design for upholstered furniture in order to achieve a high level of resistance to cigarette ignition.

1.3.6 The effects of aging on components, and composites made from components, have not been studied. As a result, the test methods contained in this standard might not predict changes caused by aging or contamination during normal use.

1.4 Test Selection.

1.4.1 All outer cover fabrics shall be subjected to the cover fabric test.

1.4.2 All interior fabrics used in intimate contact with outer fabrics shall be subjected to the interior fabric test.

1.4.3 All welt cord shall be subjected to the welt cord test.

1.4.4 All material used under the cover fabric in seats or within inside vertical walls (inside arms and inside backs) shall be subjected to the filling/padding component test.

1.4.5 Any material used in the deck under loose cushions shall be subjected to the decking materials test.

1.4.6 Any material intended to serve as a barrier between Class II cover fabrics and conventional polyurethane foam in a seat shall be subjected to the barrier materials test.

Chapter 2 Referenced Publications

2.1 General. The documents or portions thereof listed in this chapter are referenced within this standard and shall be considered part of the requirements of this document.

2.2 NFPA Publications. (Reserved)

2.3 Other Publications.

2.3.1 GSA Publication. General Services Administration, Specifications Activity, Printed Materials Supply Division, Building 197, Naval Weapons Plant, Washington DC 20407.

Federal Specification CCC.C.438.E, *Cloth, Ticking, Twill, Cotton; Type I,* February 14, 1986.

Chapter 3 Definitions

3.1 General. The definitions contained in this chapter shall apply to the terms used in this standard. Where terms are not included, common usage of the terms shall apply.

3.2 NFPA Official Definitions.

3.2.1 Shall. Indicates a mandatory requirement.

Copyright National Fire Protection Association
Provided by IHS under license with NFPA
No reproduction or networking permitted without license from IHS
Not for Resale

3.2.2 Should. Indicates a recommendation or that which is advised but not required.

3.2.3 Standard. A document, the main text of which contains only mandatory provisions using the word "shall" to indicate requirements and which is in a form generally suitable for mandatory reference by another standard or code or for adoption into law. Nonmandatory provisions shall be located in an appendix or annex, footnote, or fine-print note and are not to be considered a part of the requirements of a standard.

3.3 General Definitions.

3.3.1 Barrier/Barrier Fabric. The fabric or other material placed directly under the cover fabric when Class II cover fabric is used.

3.3.2 Char. Carbonaceous material formed by pyrolysis or incomplete combustion.

3.3.3 Filling Direction. In woven fabrics that direction perpendicular to the warp direction.

3.3.4 Ignition. Continuous, self-sustaining, smoldering combustion of upholstered furniture substrates after exposure to burning cigarettes.

3.3.4.1* *Obvious Ignition.* Pronounced, continuous, and self-sustaining combustion of the test system.

3.3.5* Machine Direction. In the case of nonwoven or film-type materials, that direction parallel to the longest dimension of the roll goods.

3.3.6 Sample. Material being tested.

3.3.7 Selvedge. The outermost edge of the width of the fabric.

3.3.8 Specimen. Individual pieces of a sample used in a single test assembly.

3.3.9 Warp Direction. In woven textiles, that direction on the roll of fabric that is parallel to the selvedges.

3.3.10 Welt. The cord or piping sewn into the seam or border edge of a cushion, pillow, arm, or back of a furniture item.

Chapter 4 Test Apparatus

4.1 Mini-Mock-Up Tester.

4.1.1 The mini-mock-up tester shall consist of a base with a centrally located guide and a stationary vertical panel, a movable horizontal carriage, and a removable vertical support panel as shown in Figure 4.1.1.

4.1.2 The base shall consist of two wooden panels, each nominally 203 mm × 203 mm with nominal 19-mm thickness, joined together at one edge.

4.1.3 The carriage shall have a 125 mm × 203 mm platform to support a horizontal specimen.

4.1.4 The platform shall be 38 mm above the floor of the base and shall have a 32-mm lip at the front edge.

4.1.5 The carriage shall be grooved to fit over a guide provided on the floor of the base.

4.1.6 The removable vertical support panel shall consist of a wooden panel of nominal 203 mm × 203 mm area and nominal 19-mm thickness, which stands against the vertical wall of the base.

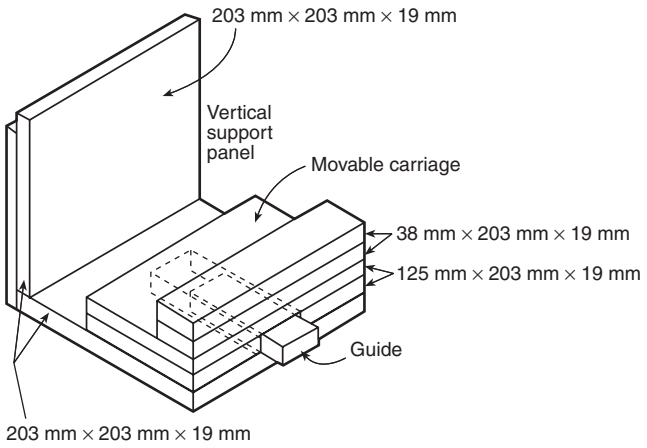

FIGURE 4.1.1 Mini-Mock-Up Tester.

4.2 Decking Materials Tester.

4.2.1 The decking materials tester shall consist of a plywood base and a plywood retainer ring.

4.2.2 The base shall measure 533 mm × 343 mm × 13 mm.

4.2.3 The retainer ring shall measure 533 mm × 343 mm × 13 mm with an opening measuring 406 mm × 216 mm as shown in Figure 4.2.3.

4.3 Ignition Source. The ignition source for the test shall be natural tobacco cigarettes without filter tips, 85 mm ± 2 mm long, with a packing density of 0.270 g/cm^3 ± 0.020 g/cm^3, and a total weight of 1.1 g ± 0.1 g.

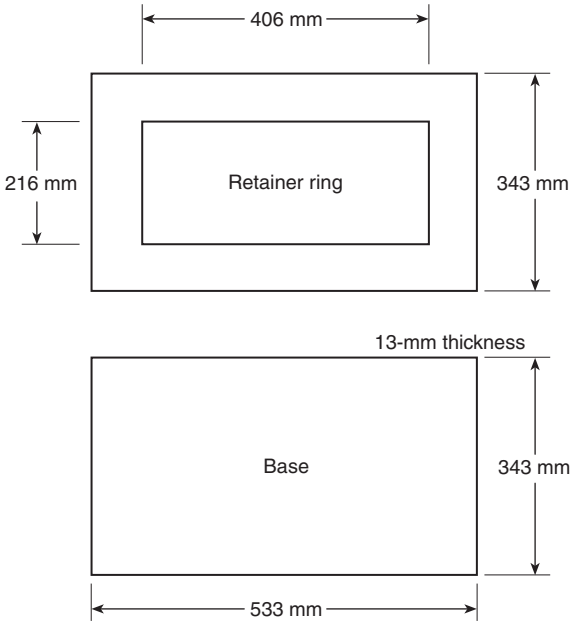

FIGURE 4.2.3 Decking Materials Tester.

Copyright National Fire Protection Association
Provided by IHS under license with NFPA
No reproduction or networking permitted without license from IHS
Not for Resale

4.4 Standard Type I Cover Fabric.

4.4.1 Standard Type I cover fabric shall be 100 percent cotton mattress ticking conforming to Federal Specification CCC.C.438.E, *Cloth, Ticking, Twill, Cotton; Type I.*

4.4.2 Standard Type I cover fabric shall be laundered and tumble-dried once before use.

4.5* Standard Type II Cover Fabric. Standard Type II cover fabric shall be UFAC Type II, 100 percent bright, regular rayon, scoured, 20/2, ring-spun, basket-weave construction, 125 g/m^2 ± 12 g/m^2, and white in color and shall not be treated with any flame-retardant finishes, whiteners, or back coating.

4.6 Sheeting Material.

4.6.1 Sheeting material shall be cotton bed sheeting weighing 125 g/m^2 ± 28 g/m^2 and white in color and shall not be treated with flame retardants.

4.6.2 For testing, the fabric shall be cut into squares of 127 mm × 127 mm.

4.6.3 If 100 percent cotton sheeting is unavailable, a 50/50 blend of cotton/polyester conforming to the other specifications (weight, color, and untreated) shall be permitted to be used.

4.7 Polyurethane Foam Substrate. The polyurethane foam substrate shall be an open-celled, polyether-type, urethane UFAC foam having a density of 20 kg/m^3 to 25 kg/m^3 and containing no inorganic fillers and shall not be treated with flame retardants.

4.8 Miscellaneous. Other apparatus needed to carry out the testing shall include straight pins, a staple gun, a knife or scissors, tongs, and a linear scale graduated in millimeter divisions.

4.9* Air Velocity.

4.9.1 The air velocity across the test assemblies shall be maintained below 15.2 m/min (which is virtually the velocity of natural convection created by the burning cigarette) in order to minimize localized effects from draft superheating of cigarette embers.

4.9.2 The smoke plume from the burning cigarette shall be visibly vertical and shall be a minimum of 152 mm in height.

4.10 Extinguishing Equipment.

4.10.1 A pressurized water fire extinguisher or other fire-extinguishing equipment shall be immediately available.

4.10.2 A water bottle fitted with a spray nozzle shall be provided to extinguish any ignited portions of the test specimen.

4.10.3 A bucket of water shall be provided for immersing smoldering or burning materials removed from the tester.

4.10.4 Tongs shall be provided for handling smoldering materials prior to immersion.

4.10.5 Gloves and breathing apparatus also shall be provided for handling smoldering or burning materials.

4.11 Draft Enclosure. An open, draft-preventive enclosure, measuring 1219 mm × 533 mm × 610 mm, shall be provided and used to restrict airflow to convection only as shown in Figure 4.11.

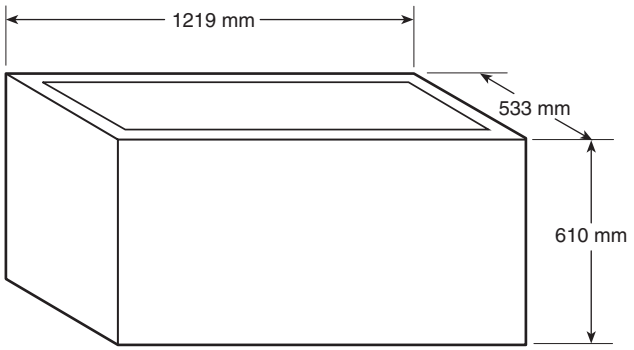

FIGURE 4.11 Draft Enclosure.

Chapter 5 Test Specimens

5.1 Specimen Conditioning.

5.1.1 All test upholstery fabrics and test materials, including cigarettes and sheeting material, shall be conditioned at a temperature of 21°C ± 2.8°C and a relative humidity of less than 65 percent for at least 4 hours prior to testing.

5.1.2 If the test room does not meet the specifications for conditioning described in 5.1.1, the testing shall be initiated within 10 minutes after the specimens are removed from the conditioning room.

5.2 Cover Fabric Specimen.

5.2.1 Three 203 mm × 203 mm specimens shall be cut from the material to be tested for horizontal panels, and three 203 mm × 381 mm specimens shall be cut for vertical panels.

5.2.2 Each specimen shall have its long dimension cut in the direction of the warp and assembled for testing in a warp-to-warp orientation, such that the major areas of weave variation lie in the crevice of the assembled test apparatus.

5.2.3 For fabrics with complex weaves, specimens shall be cut such that portions of the three largest areas of weave complexity are contacted by the cigarettes placed on the test assemblies.

5.2.3.1 For dyed fabrics, printed fabrics, or both, color shall not constitute a variation relative to cigarette ignition resistance in this test.

5.3 Interior Fabric Specimen. Three 203 mm × 203 mm specimens shall be cut from the material to be tested.

5.4 Welt Cord Specimen. Three 205-mm specimens shall be cut from the welt cord to be tested.

5.5 Filling/Padding Component Specimen.

5.5.1 Three 203 mm × 127 mm × 51 mm specimens shall be cut for the horizontal panels, and three 203 mm × 203 mm × 51 mm specimens shall be cut for the vertical panels.

5.5.2* For loose or particulate materials such as shredded polyurethane and down, upholstery cover materials or ticking used to contain the loose or particulate material shall be sewn as follows:

(1) Knife edge–type bags shall measure 254 mm × 254 mm inside seam to inside seam.
(2) The bags shall be made of the same material used to manufacture the upholstered furniture, and the loose or particulate material shall be the same as that used to manufacture the upholstered furniture.

Copyright National Fire Protection Association
Provided by IHS under license with NFPA
No reproduction or networking permitted without license from IHS
Not for Resale

(3) The bags, sewn on three sides, then shall be filled with 40 g ± 2 g of the loose or particulate material, and the fourth side shall be sewn closed.
(4) The composite of the bag material and the loose or particulate material shall be tested using the filling/padding component test and shall pass the minimum Class I criteria for this test when tested in the vertical wall of the mini-mock-up.

5.6 Decking Materials Specimen.

5.6.1 One specimen measuring 533 mm × 343 mm and at least 25 mm thick shall be cut from the decking material to be tested.

5.6.2 If sample thickness is less than 25 mm, multiple layers shall be used in this test to achieve the required thickness.

5.7 Barrier Materials Specimen. Three 203 mm × 203 mm specimens shall be cut for horizontal panels from the material to be tested, and three 203 mm × 381 mm specimens shall be cut for vertical panels.

Chapter 6 Test Procedures

6.1 Cover Fabric Test.

6.1.1 For horizontal panels, the 203 mm × 203 mm cover fabric specimen shall be placed on a 203 mm × 127 mm × 51 mm polyurethane substrate, using pins in the ends of the fabric specimen to hold it in place, as shown in Figure 6.1.1.

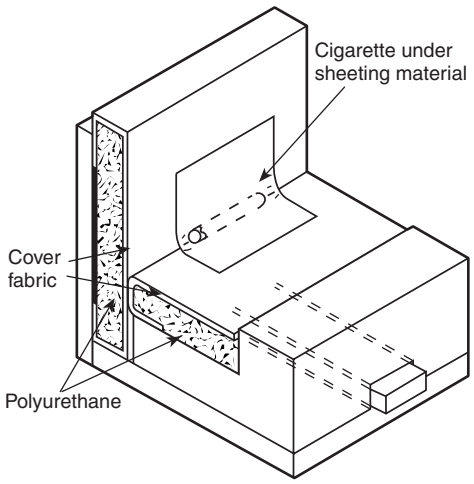

FIGURE 6.1.1 Cover Fabric Test Method.

6.1.2 For vertical panels, the 203 mm × 381 mm fabric specimen shall be placed on a 203 mm × 203 mm × 51 mm polyurethane substrate as shown in Figure 6.1.1.

6.1.2.1 The fabric shall overlap the top and bottom of the substrate and be pinned into place on the corners.

6.1.2.2 The warp or machine direction of the fabric shall run from front to back on the test assembly.

6.1.3 Each assembled vertical and horizontal panel shall be placed in a mini-mock-up tester as shown in Figure 6.1.1.

6.1.4 The position of the crevice shall be marked on the sides of the vertical substrate.

6.1.5 Three cigarettes shall be lighted, and a lighted cigarette shall be placed on each of the three test assemblies such that the cigarette lies in the crevice and against the vertical panel, with each cigarette end equidistant from its respective side of the assembly.

6.1.6 Each cigarette shall be well lighted and burned not more than 4 mm when placed at a specific test location.

6.1.7* A piece of sheeting material shall be placed over each cigarette and shall be smoothed over the cigarette to ensure intimate contact.

6.1.7.1 The sheeting shall be pinned to the vertical panel approximately 63 mm above the crevice.

6.1.8 Each cigarette shall be allowed to burn its full length unless an obvious ignition of the polyurethane substrate occurs.

6.1.8.1 If a cigarette extinguishes before burning its entire length, a fresh cigarette shall be placed on a fresh area of the test assembly and covered with sheeting fabric until one of the following occurs:

(1) Three cigarettes have burned their entire lengths on three individual test specimens.
(2) Three cigarettes have self-extinguished on the sample.

6.1.9 If an obvious ignition occurs on any of the three specimens, the smoldering materials shall be extinguished, and the sample shall be recorded as a Class II cover fabric based on the results of this test.

6.1.10 If no obvious ignition occurs, the char on the vertical panel measured from the original crevice position to the highest part of the destroyed or degraded cover fabric shall be recorded to the nearest 2.5 mm.

6.1.10.1 The original crevice position shall be determined by laying a straightedge or ruler between the two marks required by 6.1.4 on the edges of the vertical panel.

6.1.10.2 The highest point of destroyed or degraded fabric shall be defined as the highest point at which any of the fabric is charred from front to back.

6.2 Interior Fabric Test.

6.2.1 For horizontal panels, the 203 mm × 203 mm piece of interior fabric and the 203 mm × 203 mm standard Type I cover fabric shall be placed with the interior fabric against the polyurethane substrate, using pins in the ends of the fabric specimens to hold them in place, as shown in Figure 6.2.1.

6.2.2 For vertical panels, 203 mm × 381 mm standard Type I cover fabric shall be placed on a 203 mm × 203 mm × 51 mm polyurethane substrate as shown in Figure 6.2.1.

6.2.2.1 The fabric shall overlap the top and bottom of the substrate and shall be pinned into place at the corners.

6.2.3 Each assembled vertical and horizontal panel shall be placed in a mini-mock-up tester as shown in Figure 6.2.1.

6.2.4 The position of the crevice shall be marked on the sides of the vertical polyurethane substrate.

6.2.5 Three cigarettes shall be lighted, and a lighted cigarette shall be placed on each of the three test assemblies such that the cigarette lies in the crevice and against the vertical panel, with each cigarette end equidistant from its respective side of the assembly.

--`,,,-`-`,,`,,`,`,,`---
Copyright National Fire Protection Association
Provided by IHS under license with NFPA
No reproduction or networking permitted without license from IHS
Not for Resale

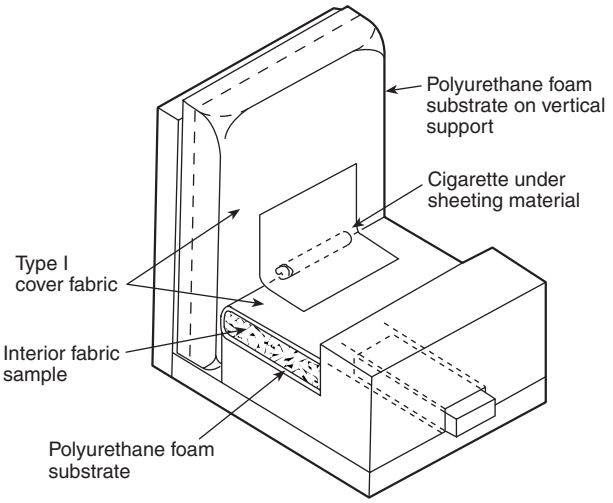

FIGURE 6.2.1 Interior Fabric Test Method.

6.2.6 Each cigarette shall be well lighted and burned not more than 4 mm when placed at a specific test location.

6.2.7* A piece of sheeting material shall be placed over each cigarette and shall be smoothed over the cigarette to ensure intimate contact.

6.2.7.1 The sheeting shall be pinned to the vertical panel approximately 63 mm above the crevice.

6.2.8 Each cigarette shall be allowed to burn its full length unless an obvious ignition of the polyurethane substrate occurs.

6.2.8.1 If a cigarette extinguishes before burning its entire length, a fresh cigarette shall be placed on a new test assembly and covered with sheeting fabric until one of the following occurs:

(1) Three cigarettes have burned their entire length on three individual test specimens.
(2) Three cigarettes have self-extinguished on the sample.

6.2.9 If an obvious ignition occurs on any of the three specimens, the smoldering materials shall be extinguished, and the sample shall be recorded as a Class II interior fabric based on the results of this test.

6.2.10 If no obvious ignition occurs, the char on the vertical panel measured from the original crevice position to the highest part of the destroyed or degraded interior fabric shall be recorded to the nearest 2.5 mm.

6.2.10.1 The original crevice position shall be determined by laying a straightedge or ruler between the two marks required by 6.2.4 on the vertical panel.

6.2.10.2 The highest point of destroyed or degraded fabric shall be defined as the highest point at which any of the fabric is charred from front to back.

6.3 Welt Cord Test.

6.3.1 Sizes.

6.3.1.1 Three specimens of standard Type II cover fabric shall be cut for each of the following specified sizes:

(1) Horizontal panels measuring 203 mm × 203 mm
(2) Vertical panels measuring 203 mm × 381 mm
(3) Unsewn welts folded to measure 203 mm × 25 mm

6.3.1.2 The width of the welt shall be adjusted to the size of the welt cord.

6.3.1.3 For horizontal panels, the 203 mm × 203 mm Type II cover fabric shall be placed on a 203 mm × 127 mm × 51 mm polyurethane substrate, using pins in the ends of the fabric specimens to hold them in place, as shown in Figure 6.3.1.3.

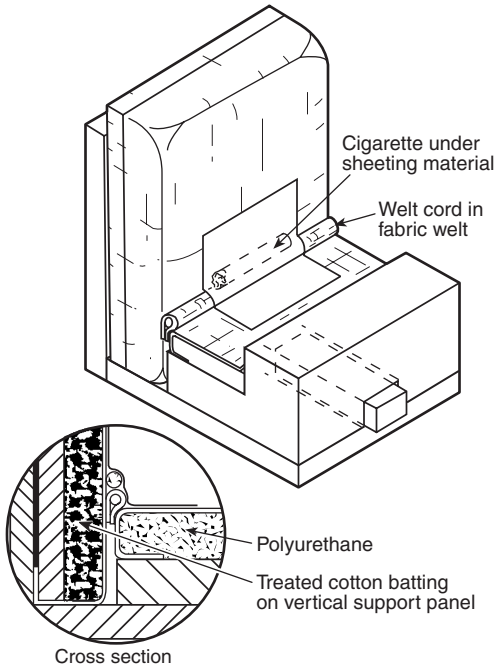

FIGURE 6.3.1.3 Welt Cord Test Method.

6.3.1.4 For vertical panels, the 203 mm × 381 mm Type II cover fabric shall be placed on a 203 mm × 203 mm × 51 mm polyurethane substrate as shown in Figure 6.3.1.3.

6.3.1.4.1 The fabric shall overlap the top and bottom of the substrate and shall be pinned into place at the corners.

6.3.2 Each assembled vertical and horizontal panel shall be placed in a mini-mock-up tester as shown in Figure 6.3.1.3.

6.3.3 A welt cord specimen shall be placed into the center of a folded strip of standard Type II cover fabric to form an unsewn welt.

6.3.3.1 An unsewn welt shall be placed in each test assembly such that the fabric edges are located between the horizontal and vertical panels and are held tightly in place by the panels as shown in Figure 6.3.1.3.

6.3.4 The position of the top of the welt shall be marked on the sides of the vertical polyurethane substrate.

6.3.5 Three cigarettes shall be lighted, and a lighted cigarette shall be placed on each of the three test assemblies such that the cigarette lies on the welt and against the vertical panel, with each cigarette end equidistant from its respective side of the assembly.

6.3.6 Each cigarette shall be well lighted and burned not more than 4 mm when placed at a specific test location.

Copyright National Fire Protection Association
Provided by IHS under license with NFPA
No reproduction or networking permitted without license from IHS
Not for Resale

6.3.7* A piece of sheeting material shall be placed over each cigarette and shall be smoothed over the cigarette to ensure intimate contact.

6.3.7.1 The sheeting shall be pinned to the vertical panel approximately 63 mm above the crevice.

6.3.8 Each cigarette shall be allowed to burn its full length unless an obvious ignition of the polyurethane substrate occurs.

6.3.8.1 If a cigarette extinguishes before burning its entire length, a fresh cigarette shall be placed on a new test assembly and covered with sheeting fabric until one of the following occurs:

(1) Three cigarettes have burned their entire lengths on three individual specimens.
(2) Three cigarettes have self-extinguished on the sample.

6.3.9 If an obvious ignition occurs on any of the three specimens, the smoldering materials shall be extinguished, and the sample shall be recorded as a Class II welt cord based on the results of this test.

6.3.10 If no obvious ignition occurs, the char on the vertical panel measured from the top of the original welt position to the highest part of the destroyed or degraded fabric shall be recorded.

6.3.10.1 The top of the original welt position shall be determined by laying a straightedge or ruler between the two marks required by 6.3.4 on the edges of the vertical panel.

6.3.10.2 The highest point of destroyed or degraded fabric shall be defined as the highest point at which any of the fabric is charred from front to back.

6.4 Filling/Padding Component Test.

6.4.1 Three 203 mm × 203 mm specimens shall be cut from standard Type I cover fabric for the horizontal panels, and three 203 mm × 305 mm specimens shall be cut for the vertical panels.

6.4.1.1 Three horizontal panels shall be constructed by wrapping each panel with Type I cover fabric, such that the top surface is completely covered, and the long direction of the fabric continues over the crevice edge and partially covers the bottom surface.

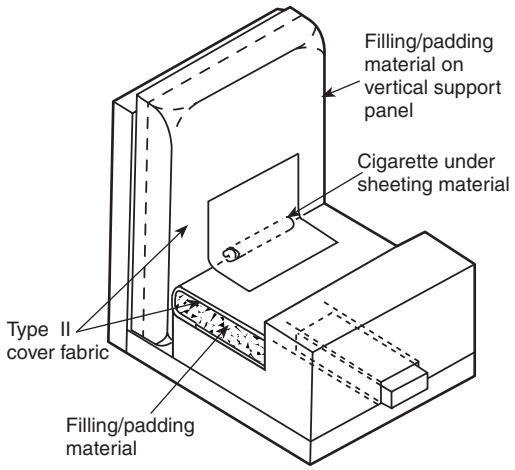

FIGURE 6.4.1.2 Filling/Padding Component Test Method.

6.4.1.2 The cover fabric shall be pinned into place on the top and bottom as shown in Figure 6.4.1.2.

6.4.1.3 Three vertical panels shall be constructed by covering one surface of a removable vertical support panel with a vertical pad of the test specimen material topped by the Type I cover fabric.

6.4.1.4 The Type I cover fabric shall be pulled around the top and bottom of the removable vertical support panel and stapled to the back side.

6.4.2 Each assembled vertical and horizontal panel shall be placed in a mini-mock-up tester as shown in Figure 6.4.1.2, such that a snug fit is created between the two panels.

6.4.3 The position of the crevice shall be marked on the edges of the cover fabric.

6.4.4 Three cigarettes shall be lighted, and a lighted cigarette shall be placed on each of the three test assemblies such that the cigarette lies in the crevice and against the vertical panel, with each cigarette end equidistant from its respective side of the assembly.

6.4.5 Each cigarette shall be well lighted and burned not more than 4 mm when placed at a specific test location.

6.4.6* A piece of sheeting material shall be placed over each cigarette and shall be smoothed over the cigarette to ensure intimate contact.

6.4.6.1 The sheeting shall be pinned to the vertical panel approximately 63 mm above the crevice.

6.4.7 Each cigarette shall be allowed to burn its full length unless an obvious ignition of the polyurethane substrate occurs.

6.4.7.1 If a cigarette extinguishes before burning its entire length, a fresh cigarette shall be placed on a new test assembly and covered with sheeting fabric until one of the following occurs:

(1) Three cigarettes have burned their entire lengths on three individual test specimens.
(2) Three cigarettes have self-extinguished on the sample.

6.4.8 If an obvious ignition occurs on any of the three specimens, the smoldering materials shall be extinguished, and the sample shall be recorded as a Class II filling/padding material based on the results of this test.

6.4.9 If no obvious ignition occurs, the char on the vertical panel measured from the original crevice position to the highest part of the destroyed or degraded fabric shall be recorded.

6.4.9.1 The original crevice position shall be determined by laying a straightedge or ruler between the two marks required by 6.4.3 on the edges of the vertical panel.

6.5 Decking Materials Test.

6.5.1 One 533 mm × 343 mm specimen shall be cut from standard Type II fabric.

6.5.2 The decking material specimen shall be placed on the plywood base of the decking materials tester and covered with the standard Type II fabric.

6.5.2.1 The plywood retainer ring shall be placed on top of the cover fabric as shown in Figure 6.5.2.1.

Copyright National Fire Protection Association
Provided by IHS under license with NFPA
No reproduction or networking permitted without license from IHS
Not for Resale

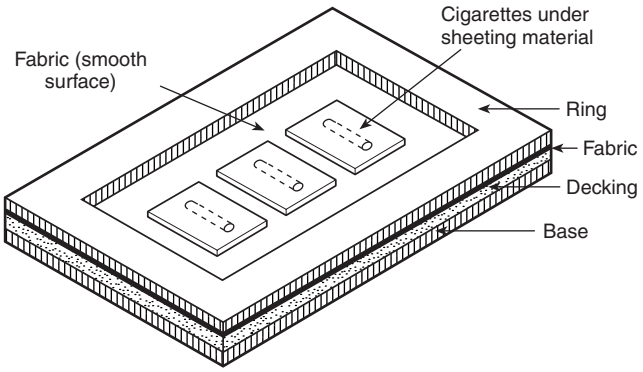

FIGURE 6.5.2.1 Decking Materials Test Method.

6.5.3 Three cigarettes shall be lighted and placed on the surface of the standard Type II fabric so that they are equally spaced from each other and from the edges of the retainer ring.

6.5.4 Each cigarette shall be well lighted and burned not more than 4 mm when placed at a specific test location.

6.5.5 A piece of sheeting material shall be placed over each of the cigarettes and shall be smoothed over the cigarette to ensure intimate contact.

6.5.6 Each cigarette shall be allowed to burn its full length.

6.5.6.1 If a cigarette extinguishes before burning its entire length, a fresh cigarette shall be placed on a fresh area of the cover fabric until one of the following occurs:

(1) Three cigarettes have burned their entire lengths.
(2) Three cigarettes have self-extinguished.

6.5.7 If an obvious ignition occurs at any of the cigarette locations, the smoldering material shall be extinguished, and the sample shall be recorded as a Class II decking material based on the results of this test.

6.5.8 If no obvious ignition occurs, the maximum length of char shall be measured from the original cigarette position and recorded to the nearest 2.5 mm.

6.6 Barrier Materials Test.

6.6.1 Three 203 mm × 203 mm specimens shall be cut from standard Type II cover fabric for horizontal panels, and three 203 mm × 381 mm specimens shall be cut for vertical panels.

6.6.1.1 For horizontal panels, a barrier specimen shall be placed on a 203 mm × 127 mm × 51 mm polyurethane substrate.

6.6.1.2 The barrier shall be folded around and under the polyurethane as shown in Figure 6.6.1.2 and fastened in place with pins.

6.6.1.3 The 203 mm × 203 mm cover fabric shall be placed over each barrier and fastened in place with pins.

6.6.1.4 For vertical panels, a barrier specimen shall be placed on a 203 mm × 203 mm × 51 mm polyurethane substrate.

6.6.1.5 The 203 mm × 381 mm cover fabric specimen shall be placed over each vertical panel and fastened in place with pins as shown in Figure 6.6.1.2.

6.6.2 Each assembled horizontal panel and vertical panel shall be arranged in the test assembly such that a firm contact is achieved across the entire crevice formed by vertical and horizontal panels.

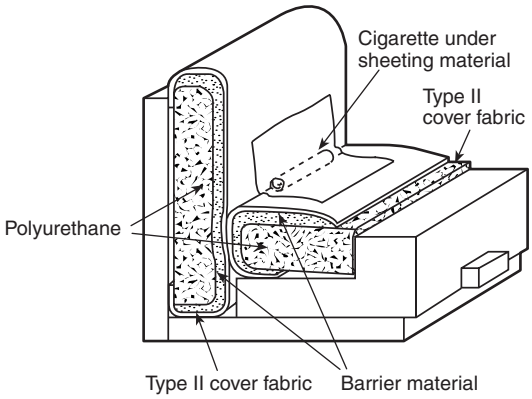

FIGURE 6.6.1.2 Barrier Materials Test Method.

6.6.3 The position of the crevice shall be marked on the sides of the vertical polyurethane substrate.

6.6.4 Three cigarettes shall be lighted, and a lighted cigarette shall be placed on each of the three test assemblies such that the cigarette lies in the crevice and against the vertical panel, with each cigarette end equidistant from its respective side of the assembly.

6.6.5 Each cigarette shall be well lighted and burned not more than 4 mm when placed at a specific test location.

6.6.6* A piece of sheeting material shall be placed over each cigarette and shall be smoothed over the cigarette to ensure intimate contact.

6.6.6.1 The sheeting shall be pinned to the vertical panel approximately 63 mm above the crevice.

6.6.7 Each cigarette shall be allowed to burn its full length unless an obvious ignition of the substrate occurs.

6.6.7.1 If a cigarette extinguishes before burning its entire length, a fresh cigarette shall be placed on a fresh area of the test assembly and covered with sheeting fabric until one of the following occurs:

(1) Three cigarettes have burned their entire lengths on three individual test specimens.
(2) Three cigarettes have self-extinguished on the sample.

6.6.8 If an obvious ignition occurs on any of the three specimens, the smoldering materials shall be extinguished, and the sample shall be recorded as a Class II barrier material based on the results of this test.

6.6.9 If no obvious ignition occurs, the char on the vertical panel measured from the original crevice position to the highest part of the destroyed or degraded fabric shall be recorded to the nearest 2.5 mm.

6.6.9.1 The original crevice position shall be determined by laying a straightedge or ruler between the two marks required by 6.6.3 on the edges of the vertical panel.

6.6.9.2 The highest point of destroyed or degraded fabric shall be defined as the highest point at which any of the fabric is charred from front to back.

Copyright National Fire Protection Association
Provided by IHS under license with NFPA
No reproduction or networking permitted without license from IHS
Not for Resale

Chapter 7 Cigarette Resistance Classifications

7.1 General.

7.1.1 Furniture components shall be classified as Class I or Class II in accordance with Section 7.2 through Section 7.7.

7.1.2 An upholstered furniture component shall meet the requirements of Class I to be considered resistant to cigarette ignition.

7.2 Cover Fabric Classification.

7.2.1 Class I. Class I cover fabric shall meet the criteria of 7.2.1.1 and 7.2.1.2.

7.2.1.1 When subjected to the cover fabric test, a specimen shall show no evidence of ignition of any test assembly.

7.2.1.2 The vertical char on any of the three specimens shall not exceed 45 mm.

7.2.2 Class II. Cover fabrics that do not meet Class I criteria shall be designated as Class II.

7.3 Interior Fabric Classification.

7.3.1 Class I. Class I interior fabric shall meet the criteria of 7.3.1.1 and 7.3.1.2.

7.3.1.1 When subjected to the interior fabric test, a specimen shall show no evidence of ignition of any test assembly.

7.3.1.2 The vertical char on the cover fabric of any of the three specimens shall not exceed 38 mm.

7.3.2 Class II. Interior fabrics that do not meet Class I criteria shall be designated as Class II.

7.4 Welt Cord Classification.

7.4.1 Class I. Class I welt cord shall meet the criteria of 7.4.1.1 and 7.4.1.2.

7.4.1.1 When subjected to the welt cord test, a specimen shall show no evidence of ignition of any test assembly.

7.4.1.2 When measured from the top of the original welt position, the vertical char on the cover fabric shall not exceed 38 mm for any of three replicated tests.

7.4.2 Class II. Welt cord that does not meet Class I criteria shall be designated as Class II.

7.5 Filling/Padding Components Classification.

7.5.1 Class I. Class I components shall meet the criteria of 7.5.1.1 and 7.5.1.2.

7.5.1.1 When subjected to the filling/padding component test, a specimen shall show no evidence of ignition of any test assembly.

7.5.1.2 When measured from the original crevice position, the vertical char length on the cover fabric shall not exceed 38 mm for any of three replicated tests.

7.5.2 Class II. Components that do not meet Class I criteria shall be designated as Class II.

7.6 Decking Materials Classification.

7.6.1 Class I. Class I decking materials shall meet the criteria of 7.6.1.1 and 7.6.1.2.

7.6.1.1 When subjected to the decking materials test, a specimen shall show no evidence of ignition at any cigarette location.

7.6.1.2 When measured from the original cigarette position, the char length on the cover fabric shall not exceed 38 mm at any of three cigarette locations.

7.6.2 Class II. Decking materials that do not meet Class I criteria shall be designated as Class II.

7.7 Barrier Materials Classification.

7.7.1 All barrier materials used in cigarette-resistant furniture construction shall be classified as Class I barrier fabric using the test method described in Section 6.6.

7.7.2 Class I. Class I barriers shall meet the criteria of 7.7.2.1 and 7.7.2.2.

7.7.2.1 When subjected to the barrier materials test, a specimen shall show no evidence of ignition of any test assembly.

7.7.2.2 When measured from the original crevice position, the vertical char length on the cover fabric shall not exceed 51 mm for any of three replicated tests.

7.7.3 Class II. Barriers that do not meet Class I criteria shall be designated as Class II.

Chapter 8 Safety Precautions

8.1* Combustion.

8.1.1 Any test shall be discontinued as soon as continuing combustion occurs.

8.1.2 The exposed area shall be wet immediately with a water spray from the water bottle, and the charred or burned material shall be removed and immersed in a bucket of water.

8.1.3 The test area then shall be ventilated.

8.2* Exposure.

8.2.1 Test personnel shall avoid exposure to smoke and gases produced during testing as much as possible.

8.2.2 A large hood with a low air velocity shall be permitted to be in operation during testing to remove products of combustion.

Chapter 9 Precision and Accuracy

9.1* Statement. (Reserved)

Annex A Explanatory Material

Annex A is not a part of the requirements of this NFPA document but is included for informational purposes only. This annex contains explanatory material, numbered to correspond with the applicable text paragraphs.

A.1.2.3 Cover fabrics determined to be Class II by this test should not be used in the manufacture of furniture intended to be resistant to cigarette ignition without a Class I–type barrier. Barrier materials also are classified by this test. Any other components determined to be Class II by this test should not be used in the manufacture of furniture intended to be resistant to cigarette ignition.

A.3.3.4.1 Obvious Ignition. This is a matter of operator judgment based on experience in this type of operation.

Copyright National Fire Protection Association
Provided by IHS under license with NFPA
No reproduction or networking permitted without license from IHS
Not for Resale

A.3.3.5 Machine Direction. Where rolls or sheets are cut into small pieces, the machine direction can become impossible to distinguish unless the samples are identified individually prior to cutting.

A.4.5 UFAC refers to the Upholstered Furniture Action Council. Standard Type II cover fabric can be obtained from TESTFABRICS, Inc., P.O. Box 420, Middlesex, NJ 08848-0420.

A.4.9 It is recommended that the properly loaded mini-mock-up tester and/or the decking materials tester be placed in a draft enclosure *(see Section 4.11)*, and then the draft enclosure should be placed into a fume hood having air curtains or a door across the hood face and containing virtually zero air velocity.

A fume hood with air curtains drawn across the face and zero air velocity at the test locations is recommended.

A.5.5.2 Composites of loose/particulate materials and bag materials that are not classified as Class I should not be used in upholstered furniture that is expected to be resistant to cigarette ignition.

A.6.1.7 Proper fabric to cigarette contact can be ensured by running a finger over the covered cigarettes.

A.6.2.7 Proper fabric to cigarette contact can be ensured by running a finger over the covered cigarettes.

A.6.3.7 Proper fabric to cigarette contact can be ensured by running a finger over the covered cigarettes.

A.6.4.6 Proper fabric to cigarette contact can be ensured by running a finger over the covered cigarettes.

A.6.6.6 Proper fabric to cigarette contact can be ensured by running a finger over the covered cigarettes.

A.8.1 CAUTION: Even under the most carefully observed conditions, smoldering combustion can progress to a point where it cannot be extinguished readily.

A.8.2 Products of combustion can cause irritation and be dangerous to test personnel.

A.9.1 A precision and accuracy statement is under study and will be provided for later inclusion in the test method. For preliminary data, see Annex B.

Annex B Commentary

This annex is not a part of the requirements of this NFPA document but is included for informational purposes only.

B.1 Introduction.

B.1.1 In April 1979, the Upholstered Furniture Action Council (UFAC) adopted a voluntary program designed to reduce the cigarette ignition propensity of upholstered furniture. The UFAC program is based on the six test methods described in this standard and consists of the following four elements:

(1) Classification of cover fabrics
(2) Construction criteria for use of complying materials
(3) Labeling plan to inform the consumer of the safer product
(4) Compliance verification program to ensure that furniture manufacturers and their suppliers utilize materials and methods of construction as required by the voluntary program

B.1.2 The UFAC construction criteria are intended to effect the following changes:

(1) Eliminate ignition-prone welt cords and substitute smolder-resistant welt cords that meet the requirements of the UFAC welt cord test.
(2) Eliminate untreated cotton batting as a substrate in immediate contact with decking fabrics and substitute materials that meet the requirements of the UFAC decking materials test.
(3) Eliminate untreated cotton batting in immediate contact with the covering of the inside vertical walls and substitute materials that meet the requirements of the UFAC filling/padding component test.
(4) Eliminate intimate contact between Class II fabrics and the horizontal seating surfaces of conventional polyurethane foam cushions. Where Class II fabrics are used with conventional polyurethane foam cushions, a barrier meeting the requirements of the UFAC barrier materials test should be used.

B.2 Nature of Tests.

B.2.1 The six test methods outlined in this standard define the performance of welt cord, filling materials, decking substrates, barriers, interior fabrics, and cover fabrics. All are composite tests of individual components in combination with actual materials used by the upholstery industry. Certain standard materials have been selected for use in these tests. Performance of each component is evaluated in an assembly in which all other materials are standard. Thus, individual performance can be measured. The test methods are essentially similar. They are varied only as necessary to measure the performance of different components.

B.2.2 In the UFAC program, only those welt cords, filling materials, decking substrates, and barrier materials that meet the requirements for Class I performance can be permitted to be used. Class I cover fabrics can be permitted to be used in contact with other Class I materials. Class II cover fabrics can be permitted to be used only in conjunction with Class I barrier materials.

--`,,,`-`-`,,`,,`,`,,`---

Copyright National Fire Protection Association
Provided by IHS under license with NFPA
No reproduction or networking permitted without license from IHS
Not for Resale

B.3 Experimental Study. The significance of the UFAC program was validated by a series of chair tests in July 1979. These tests demonstrated that implementation of the UFAC program yielded a significant reduction in cigarette ignition propensity of upholstered furniture components compared to components not meeting UFAC criteria. An improvement of 89 percent was achieved by application of the UFAC criteria. In furniture manufactured before implementation of the UFAC program, 41 percent of all test cigarettes caused ignition of the filling materials. In furniture manufactured according to UFAC methods, only 4.5 percent of the cigarettes caused ignitions. For further information, see "UFAC Voluntary Action Program Chair Tests," July 26, 27, and 28, 1979.

B.4 Further Experimental Study. A sound and sensible method(s) for developing statistically significant precision and bias statements for tests contained in this standard has yet to be discovered. However, reproducibility within a laboratory and from laboratory to laboratory has been studied. The percentage of reproducibility when testing the same component in these two laboratory situations is specified in Table B.4(a) and Table B.4(b).

Table B.4(a) Reproducibility Within the Same Laboratory

Test Method	Percent Reproducibility*
Cover fabric classification	94
Interior fabric classification	94
Filling/padding classification:	
Slab and garnetted filling/padding	89
Loose and particulate filling/padding	89
Welt cord classification	94
Decking materials classification	95
Barrier materials classification	96

*The percent of reproducibility equals the percentage of replicates tested that produced the same result. For example, for welt cord classification, 94 percent of the replicate tests produced the same pass/fail or the same classification results.

B.5 General Comments. Cover fabrics determined to be Class II by these test methods can be permitted to be used where a Class I barrier is provided.

Table B.4(b) Reproducibility from Laboratory to Laboratory

Test Method	Percent Reproducibility*
Cover fabric classification	89
Interior fabric classification	91
Filling/padding classification:	
Slab and garnetted filling/padding	86
Loose and particulate filling/padding	85
Welt cord classification	91
Decking materials classification	94
Barrier materials classification	96

Note: For further information, see "UFAC Voluntary Action Program Interlab Tests," 1981 – 1991, and "Schnadig Corporation Test Data."

*The percent of reproducibility equals the percentage of laboratories that obtained the same pass/fail or the same classification result. For example, for the filling/padding classification for slab and garnetted materials, the testing laboratories obtained the same results 86 percent of the time.

Annex C Informational References

C.1 Referenced Publications. The following documents or portions thereof are referenced within this standard for informational purposes only and are thus not part of the requirements of this document unless also listed in Chapter 2.

C.1.1 NFPA Publications. (Reserved)

C.1.2 Other Publications.

C.1.2.1 Schnadig Corporation Publication. Schnadig Corporation, Engineering and Technical Services, Belmont, MS 38827.

"Schnadig Corporation Test Data"

C.1.2.2 UFAC Publications. Upholstered Furniture Action Council, P.O. Box 2436, High Point, NC 27261.

"UFAC Voluntary Action Program Chair Tests," July 26, 27, and 28, 1979.

"UFAC Voluntary Action Program Interlab Tests," 1981 – 1991.

C.2 Informational References. (Reserved)

C.3 References for Extracts. (Reserved)

--`,,,-`-`,,`,,`,`,,`---
Copyright National Fire Protection Association
Provided by IHS under license with NFPA
No reproduction or networking permitted without license from IHS
Not for Resale

Index

© 2003 National Fire Protection Association. All Rights Reserved.

The copyright in this index is separate and distinct from the copyright in the document that it indexes. The licensing provisions set forth for the document are not applicable to this index. This index may not be reproduced in whole or in part by any means without the express written permission of NFPA.

-A-

Air velocity, test apparatus 4.9, A.4.9
Application of standard 1.3

-B-

Bag materials 5.5.2, A.5.5.2
Barriers/barrier fabrics
Cigarette resistance classifications 7.7, A.1.2.3
Definition 3.3.1
Specimens 5.7
Test procedures 6.6, A.6.6.6
UFAC construction criteria ..... B.1.2(4)

-C-

Char (definition) 3.3.2
Cigarette ignition ..... *see* Ignition
Cigarette resistance classifications ..... 1.2.3, Chap. 7, A.1.2.3
Barrier materials 7.7, A.1.2.3
Cover fabrics 7.2, A.1.2.3
Decking materials 7.6
Filling/padding components 7.5
Interior fabrics 7.3
Welt 7.4
Compliance verification, UFAC program ..... B.1.1(4)
Conditioning, test specimens 5.1
Consumer labeling, UFAC ..... B.1.1(3)
Cotton batting ..... B.1.2(2), B.1.2(3)
Cover fabrics
Cigarette resistance classifications 7.2, A.1.2.3
Class II, use with Class I barrier B.5
Specimens 5.2
Test procedures 6.1, A.6.1.7

-D-

Decking materials
Cigarette resistance classifications 7.6
Specimens 5.6
Tester (test apparatus) 4.2, A.4.9
Test procedures 6.5
UFAC construction criteria ..... B.1.2(2)
Definitions ..... Chap. 3
Draft enclosure, test apparatus 4.11, A.4.9

-E-

Experimental study, UFAC program B.3, B.4
Extinguishing equipment, test apparatus 4.10

-F-

Filling direction (definition) 3.3.3
Filling/padding components
Cigarette resistance classifications 7.5
Specimens 5.5, A.5.5.2
Test procedures 6.4, A.6.4.6
UFAC construction criteria ..... B.1.2(2), B.1.2(3)

-I-

Ignition
Definition 3.3.4
Obvious 3.3.4.1, A.3.3.4.1
Source, test apparatus 4.3
Interior fabrics
Cigarette resistance classifications 7.3
Specimens 5.3
Test procedures 6.2, A.6.2.7

-L-

Labeling, consumer ..... B.1.1(3)
Loose/particulate materials 5.5.2, A.5.5.2

-M-

Machine direction (definition) 3.3.5, A.3.3.5
Mini-mockup tester 4.1, A.4.9

-O-

Obvious ignition (definition) 3.3.4.1

-P-

Padding components ..... *see* Filling/padding components
Personnel safety 8.2, A.8.2
Polyurethane foam cushions ..... B.1.2(4)
Polyurethane foam particulate materials 5.5.2, A.5.5.2
Polyurethane foam substrate 4.7
Precision and accuracy statement A.9.1
Purpose of standard 1.2

-R-

References ..... Chap. 2, Annex C
Reproducibility, test results ..... B.4, Table B.4(a), Table B.4(b)

-S-

Safety precautions ..... Chap. 8
Sample (definition) 3.3.6
Scope of standard 1.1
Selvedge (definition) 3.3.7
Shall (definition) 3.2.1
Sheeting material, test apparatus 4.6
Should (definition) 3.2.2
Specimens ..... Chap. 5
Barrier materials 5.7
Conditioning 5.1
Cover fabrics 5.2
Decking materials 5.6
Definition 3.3.8
Filling/padding components 5.5, A.5.5.2
Interior fabrics 5.3
Welt 5.4
Standard (definition) 3.2.3
Standard Type I cover fabric 4.4
Standard Type II cover fabric 4.5, A.4.5

-T-

Test apparatus ..... Chap. 4
Air velocity 4.9, A.4.9
Decking materials tester 4.2, A.4.9
Draft enclosure 4.11
Extinguishing equipment 4.10

Copyright National Fire Protection Association
Provided by IHS under license with NFPA
No reproduction or networking permitted without license from IHS
Not for Resale

Ignition source 4.3
Mini-mockup tester 4.1, A.4.9
Miscellaneous 4.8
Polyurethane foam substrate 4.7
Sheeting material 4.6
Standard Type I cover fabric 4.4
Standard Type II cover fabric 4.5, A.4.5
Test procedures ..... Chap. 6; *see also* Specimens
Barrier materials test 6.6, A.6.6.6
Cover fabric test 6.1, A.6.1.7
Decking materials test 6.5
Filling/padding component test 6.4, A.6.4.6
Interior fabric test 6.2, A.6.2.7
Welt cord test 6.3, A.6.3.7
Tests
Application 1.3
Reproducibility of results ..... B.4, Table B.4(a), Table B.4(b)
Selection 1.4
UFAC program ..... Annex B
Ticking 5.5.2

-U-

UFAC .....*see* Upholstered Furniture Action Council (UFAC)
Upholstered Furniture Action Council (UFAC) A.4.5
Construction criteria ..... B.1.1(2), B.1.2
Experimental study B.3, B.4
Nature of tests B.2
Test program elements B.1.1

-W-

Warp/warp direction (definition) 3.3.9
Welt
Cigarette resistance classifications 7.4
Definition 3.3.10
Specimens 5.4
Test procedures 6.3, A.6.3.7
UFAC construction criteria ..... B.1.2(1)

Copyright National Fire Protection Association
Provided by IHS under license with NFPA
No reproduction or networking permitted without license from IHS
Not for Resale

Sequence of Events Leading to Publication of an NFPA Committee Document

Call goes out for proposals to amend existing document or for recommendations on new document.

▼

Committee meets to act on proposals, to develop its own proposals, and to prepare its report.

▼

Committee votes on proposals by letter ballot. If two-thirds approve, report goes forward. Lacking two-thirds approval, report returns to committee.

▼

Report — *Report on Proposals* (ROP) — is published for public review and comment.

▼

Committee meets to act on each public comment received.

▼

Committee votes on comments by letter ballot. If two-thirds approve, supplementary report goes forward. Lacking two-thirds approval, supplementary report returns to committee.

▼

Supplementary report — *Report on Comments* (ROC) — is published for public review.

▼

NFPA membership meets (Annual or Fall Meeting) and acts on committee report (ROP or ROC).

▼

Committee votes on any amendments to report approved at NFPA Annual or Fall Meeting.

▼

Appeals to Standards Council on Association action must be filed within 20 days of the NFPA Annual or Fall Meeting.

▼

Standards Council decides, based on all evidence, whether or not to issue standard or to take other action, including upholding any appeals.

Committee Membership Classifications

The following classifications apply to Technical Committee members and represent their principal interest in the activity of the committee.

M *Manufacturer:* A representative of a maker or marketer of a product, assembly, or system, or portion thereof, that is affected by the standard.

U *User:* A representative of an entity that is subject to the provisions of the standard or that voluntarily uses the standard.

I/M *Installer/Maintainer:* A representative of an entity that is in the business of installing or maintaining a product, assembly, or system affected by the standard.

L *Labor:* A labor representative or employee concerned with safety in the workplace.

R/T *Applied Research/Testing Laboratory:* A representative of an independent testing laboratory or independent applied research organization that promulgates and/or enforces standards.

E *Enforcing Authority:* A representative of an agency or an organization that promulgates and/or enforces standards.

I *Insurance:* A representative of an insurance company, broker, agent, bureau, or inspection agency.

C *Consumer:* A person who is, or represents, the ultimate purchaser of a product, system, or service affected by the standard, but who is not included in the *User* classification.

SE *Special Expert:* A person not representing any of the previous classifications, but who has a special expertise in the scope of the standard or portion thereof.

NOTES:

1. "Standard" connotes code, standard, recommended practice, or guide.
2. A representative includes an employee.
3. While these classifications will be used by the Standards Council to achieve a balance for Technical Committees, the Standards Council may determine that new classifications of members or unique interests need representation in order to foster the best possible committee deliberations on any project. In this connection, the Standards Council may make such appointments as it seems appropriate in the public interest, such as the classification of "Utilities" in the National Electrical Code Committee.
4. Representatives of subsidiaries of any group are generally considered to have the same classification as the parent organization.

--`,,,-`-`,,`,,`,`,,`---
Copyright National Fire Protection Association
Provided by IHS under license with NFPA
No reproduction or networking permitted without license from IHS
Not for Resale

NFPA Technical Committee Document Proposal Form

Note: All proposals must be received by 5:00 p.m. EST/EDST on the published proposal closing date.

For further information on the standards-making process, please contact Codes and Standards Administration at 617-984-7249. For technical assistance, please call NFPA at 617-770-3000.

FOR OFFICE USE ONLY
Log #: _____
Date Rec'd: _____

Please indicate in which format you wish to receive your ROP/ROC: ☐ **CD ROM** ☐ **paper** ☐ **download**
(Note: In choosing the download option you intend to view the ROP/ROC from our Website. No copy will be sent to you.)

Date 12/18/02 **Name** John B. Smith **Telephone** 617-555-1212
Company _____
Address 9 Seattle St. **City** Seattle **State** WA **Zip** 02255
Please indicate organization represented (if any) Fire Marshals Assn. of North America

1. **a) NFPA Document Title** National Fire Alarm Code
   b) NFPA No. & Edition NFPA 72, 2002 ed. **c) Section/Paragraph** 4.4.7.1.1

2. **Proposal Recommends:** *(check one)* ☐ **new text** ☐ **revised text** ☒ **deleted text**

3. **Proposal.** *(Include proposed new or revised wording, or identification of wording to be deleted.)* Note: Proposed text should be in legislative format, that is, use underscore to denote wording to be inserted (inserted wording) and strike-through to denote wording to be deleted (~~deleted wording~~). Delete exception.

4. **Statement of Problem and Substantiation for Proposal.** Note: State the problem that will be resolved by your recommendation. Give the specific reason for your proposal including copies of tests, research papers, fire experience, etc. If more than 200 words, it may be abstracted for publication. A properly installed and maintained system should be free of ground faults. The occurrence of one or more ground faults should be required to cause a "trouble" signal because it indicates a condition that could contribute to future malfunction of the system. Ground fault protection has been widely available on these systems for years and its cost is negligible. Requiring it on all systems will promote better installations, maintenance and reliability.

5. ☒ **This Proposal is Original Material.** Note: Original material is considered to be the submitter's own idea based on or as a result of his/her own experience, thought, or research and, to the best of his/her knowledge, is not copied from another source.

   ☐ **This Proposal is Not Original Material; Its Source** ***(if known)*** **is as Follows:** _____

Sample

I hereby grant the NFPA all and full rights in copyright to this proposal, and I understand that I acquire no rights in any publication of NFPA in which this proposal in this or another similar or analogous form is used.

Signature ***(Required)*** John B. Smith

PLEASE USE SEPARATE FORM FOR EACH PROPOSAL • NFPA FAX (617) 770-3500

Mail to: Secretary, Standards Council • NFPA • 1 Batterymarch Park • PO Box 9101 • Quincy, MA 02269-9101

--`,,,`-`-`,,`,,`,`,,`---

Copyright National Fire Protection Association
Provided by IHS under license with NFPA
No reproduction or networking permitted without license from IHS

Not for Resale

NFPA Technical Committee Document Proposal Form

Note: All proposals must be received by 5:00 p.m. EST/EDST on the published proposal closing date.

For further information on the standards-making process, please contact Codes and Standards Administration at 617-984-7249. For technical assistance, please call NFPA at 617-770-3000.

FOR OFFICE USE ONLY
Log #: _____
Date Rec'd: _____

Please indicate in which format you wish to receive your ROP/ROC: ☐ **CD ROM** ☐ **paper** ☐ **download**
(Note: In choosing the download option you intend to view the ROP/ROC from our Website. No copy will be sent to you.)

Date _____ **Name** _____ **Telephone** _____
Company _____
Address _____ **City** _____ **State** _____ **Zip** _____
Please indicate organization represented (if any) _____

1. **a) NFPA Document Title** _____
   b) NFPA No. & Edition _____ **c) Section/Paragraph** _____

2. **Proposal Recommends:** *(check one)* ☐ **new text** ☐ **revised text** ☐ **deleted text**

3. **Proposal.** *(Include proposed new or revised wording, or identification of wording to be deleted.)* Note: Proposed text should be in legislative format, that is, use underscore to denote wording to be inserted (inserted wording) and strike-through to denote wording to be deleted (~~deleted wording~~). _____

4. **Statement of Problem and Substantiation for Proposal.** Note: State the problem that will be resolved by your recommendation. Give the specific reason for your proposal including copies of tests, research papers, fire experience, etc. If more than 200 words, it may be abstracted for publication. _____

5. ☐ **This Proposal is Original Material.** Note: Original material is considered to be the submitter's own idea based on or as a result of his/her own experience, thought, or research and, to the best of his/her knowledge, is not copied from another source.

   ☐ **This Proposal is Not Original Material; Its Source *(if known)* is as Follows:** _____

I hereby grant the NFPA all and full rights in copyright to this proposal, and I understand that I acquire no rights in any publication of NFPA in which this proposal in this or another similar or analogous form is used.

Signature *(Required)* _____

PLEASE USE SEPARATE FORM FOR EACH PROPOSAL • NFPA FAX (617) 770-3500

Mail to: Secretary, Standards Council • NFPA • 1 Batterymarch Park • PO Box 9101 • Quincy, MA 02269-9101

--`,,`-`-`,,`,,`,`,,`---

Copyright National Fire Protection Association
Provided by IHS under license with NFPA
No reproduction or networking permitted without license from IHS

Not for Resale