NFPA® 259

Standard Test Method for Potential Heat of Building Materials

2008 Edition



NFPA, 1 Batterymarch Park, Quincy, MA 02169-7471
An International Codes and Standards Organization

--`,,```,,,,````-`-`,,`,,`,`,,`---

Copyright National Fire Protection Association
Provided by IHS under license with NFPA
No reproduction or networking permitted without license from IHS

Not for Resale

IMPORTANT NOTICES AND DISCLAIMERS CONCERNING NFPA DOCUMENTS

NOTICE AND DISCLAIMER OF LIABILITY CONCERNING THE USE OF NFPA DOCUMENTS

NFPA codes, standards, recommended practices, and guides, of which the document contained herein is one, are developed through a consensus standards development process approved by the American National Standards Institute. This process brings together volunteers representing varied viewpoints and interests to achieve consensus on fire and other safety issues. While the NFPA administers the process and establishes rules to promote fairness in the development of consensus, it does not independently test, evaluate, or verify the accuracy of any information or the soundness of any judgments contained in its codes and standards.

The NFPA disclaims liability for any personal injury, property or other damages of any nature whatsoever, whether special, indirect, consequential or compensatory, directly or indirectly resulting from the publication, use of, or reliance on this document. The NFPA also makes no guaranty or warranty as to the accuracy or completeness of any information published herein.

In issuing and making this document available, the NFPA is not undertaking to render professional or other services for or on behalf of any person or entity. Nor is the NFPA undertaking to perform any duty owed by any person or entity to someone else. Anyone using this document should rely on his or her own independent judgment or, as appropriate, seek the advice of a competent professional in determining the exercise of reasonable care in any given circumstances.

The NFPA has no power, nor does it undertake, to police or enforce compliance with the contents of this document. Nor does the NFPA list, certify, test or inspect products, designs, or installations for compliance with this document. Any certification or other statement of compliance with the requirements of this document shall not be attributable to the NFPA and is solely the responsibility of the certifier or maker of the statement.

Copyright National Fire Protection Association
Provided by IHS under license with NFPA
No reproduction or networking permitted without license from IHS
Not for Resale

ADDITIONAL NOTICES AND DISCLAIMERS

Updating of NFPA Documents

Users of NFPA codes, standards, recommended practices, and guides should be aware that these documents may be superseded at any time by the issuance of new editions or may be amended from time to time through the issuance of Tentative Interim Amendments. An official NFPA document at any point in time consists of the current edition of the document together with any Tentative Interim Amendments and any Errata then in effect. In order to determine whether a given document is the current edition and whether it has been amended through the issuance of Tentative Interim Amendments or corrected through the issuance of Errata, consult appropriate NFPA publications such as the National Fire Codes® Subscription Service, visit the NFPA website at www.nfpa.org, or contact the NFPA at the address listed below.

Interpretations of NFPA Documents

A statement, written or oral, that is not processed in accordance with Section 6 of the Regulations Governing Committee Projects shall not be considered the official position of NFPA or any of its Committees and shall not be considered to be, nor be relied upon as, a Formal Interpretation.

Patents

The NFPA does not take any position with respect to the validity of any patent rights asserted in connection with any items which are mentioned in or are the subject of NFPA codes, standards, recommended practices, and guides, and the NFPA disclaims liability for the infringement of any patent resulting from the use of or reliance on these documents. Users of these documents are expressly advised that determination of the validity of any such patent rights, and the risk of infringement of such rights, is entirely their own responsibility.

NFPA adheres to applicable policies of the American National Standards Institute with respect to patents. For further information contact the NFPA at the address listed below.

Law and Regulations

Users of these documents should consult applicable federal, state, and local laws and regulations. NFPA does not, by the publication of its codes, standards, recommended practices, and guides, intend to urge action that is not in compliance with applicable laws, and these documents may not be construed as doing so.

Copyrights

This document is copyrighted by the NFPA. It is made available for a wide variety of both public and private uses. These include both use, by reference, in laws and regulations, and use in private self-regulation, standardization, and the promotion of safe practices and methods. By making this document available for use and adoption by public authorities and private users, the NFPA does not waive any rights in copyright to this document.

Use of NFPA documents for regulatory purposes should be accomplished through adoption by reference. The term “adoption by reference” means the citing of title, edition, and publishing information only. Any deletions, additions, and changes desired by the adopting authority should be noted separately in the adopting instrument. In order to assist NFPA in following the uses made of its documents, adopting authorities are requested to notify the NFPA (Attention: Secretary, Standards Council) in writing of such use. For technical assistance and questions concerning adoption of NFPA documents, contact NFPA at the address below.

For Further Information

All questions or other communications relating to NFPA codes, standards, recommended practices, and guides and all requests for information on NFPA procedures governing its codes and standards development process, including information on the procedures for requesting Formal Interpretations, for proposing Tentative Interim Amendments, and for proposing revisions to NFPA documents during regular revision cycles, should be sent to NFPA headquarters, addressed to the attention of the Secretary, Standards Council, NFPA, 1 Batterymarch Park, P.O. Box 9101, Quincy, MA 02269-9101.

For more information about NFPA, visit the NFPA website at www.nfpa.org.

--`,,```,,,,````-`-`,,`,,`,`,,`---

Copyright National Fire Protection Association
Provided by IHS under license with NFPA
No reproduction or networking permitted without license from IHS

Not for Resale

Copyright © 2007 National Fire Protection Association. All Rights Reserved.

NFPA 259

Standard Test Method for

Potential Heat of Building Materials

2008 Edition

This edition of NFPA 259, *Standard Test Method for Potential Heat of Building Materials,* was prepared by the Technical Committee on Fire Tests. It was issued by the Standards Council on June 4, 2007, with an effective date of June 24, 2007, and supersedes all previous editions. This edition of NFPA 259 was approved as an American National Standard on June 24, 2007.

Origin and Development of NFPA 259

This standard is based on a test method developed at the National Bureau of Standards in 1961. Consideration of the test method by the NFPA was begun in 1973, culminating in the standard that was adopted in 1976, reconfirmed in 1981, and revised at the 1986 Fall Meeting. The 1993 edition was a reconfirmation of the 1987 edition.

The 1998 edition was completely rewritten, incorporating editorial changes with the elimination of nonmandatory language. The only significant technical change was the incorporation of the requirement of two tests for a product to determine its heat of combustion. A maximum 10 percent variation was permitted; otherwise, a third test was required.

Also in 1998, a new Appendix A was added, providing explanatory material. A new Appendix C containing material extracted from Appendix C of NFPA 220, *Standard on Types of Building Construction,* was added for informational purposes.

The 2003 edition of NFPA 259 was updated to incorporate the requirements of the *Manual of Style for NFPA Technical Committee Documents.*

The 2008 edition of NFPA 259 is a reconfirmation of the 2003 edition.

Copyright National Fire Protection Association
Provided by IHS under license with NFPA
No reproduction or networking permitted without license from IHS
Not for Resale

Technical Committee on Fire Tests

William E. Fitch, *Chair*
Phyrefish Enterprises, Inc., FL [SE]

Barry L. Badders, Jr., Southwest Research Institute, TX [RT]
Jesse J. Beitel, Hughes Associates, Inc., MD [SE]
April L. Berkol, Starwood Hotels & Resorts Worldwide, Inc., NY [U]
Rep. American Hotel & Lodging Association
Robert G. Bill, Jr., FM Global, MA [I]
John A. Blair, The DuPont Company, DE [M]
Rep. Society of the Plastics Industry, Inc.
Gordon H. Damant, Inter-City Testing & Consulting Corp. of California, CA [SE]
Thomas W. Fritz, Armstrong World Industries, Inc., PA [M]
Pavinray D. Gandhi, Underwriters Laboratories Inc., IL [RT]
Gordon E. Hartzell, Hartzell Consulting, Inc., TX [SE]
Marcelo M. Hirschler, GBH International, CA [SE]
Alfred J. Hogan, Reedy Creek Improvement District, FL [E]
Rep. International Fire Marshals Association
William E. Koffel, Koffel Associates, Inc., MD [SE]
James R. Lawson, U.S. National Institute of Standards and Technology, MD [RT]
Rodney A. McPhee, Canadian Wood Council, Canada [M]
Frederick W. Mowrer, University of Maryland, MD [SE]
Deggary N. Priest, Intertek Testing Services NA, Inc., TX [RT]
David T. Sheppard, U.S. Department of Justice, MD [RT]
Kuma Sumathipala, American Forest & Paper Association, DC [M]
Rep. American Forest & Paper Association
T. Hugh Talley, Hugh Talley Company, TN [M]
Rep. Upholstered Furniture Action Council
Rick Thornberry, The Code Consortium, Inc., CA [SE]
William A. Webb, Schirmer Engineering Corporation, IL [I]
Robert A. Wessel, Gypsum Association, DC [M]
Robert J. Wills, American Iron and Steel Institute, AL [M]
Rep. American Iron and Steel Institute

Alternates

Robert M. Berhinig, Underwriters Laboratories Inc., IL [RT]
(Alt. to P. D. Gandhi)
Delbert F. Boring, Jr., American Iron and Steel Institute, OH [M]
(Alt. to R. J. Wills)
Richard J. Davis, FM Global, MA [I]
(Alt. to R. G. Bill, Jr.)
Sam W. Francis, American Forest & Paper Association, PA [M]
(Alt. to K. Sumathipala)
Richard G. Gann, Ph.D., U.S. National Institute of Standards and Technology, MD [RT]
(Alt. to J. R. Lawson)
Paul A. Hough, Armstrong World Industries, Inc., PA [M]
(Alt. to T. W. Fritz)
Marc L. Janssens, Southwest Research Institute, TX [RT]
(Alt. to B. L. Badders, Jr.)
James K. Lathrop, Koffel Associates, Inc., CT [SE]
(Alt. to W. E. Koffel)
James A. Milke, University of Maryland, MD [SE]
(Alt. to F. W. Mowrer)
Arthur J. Parker, Hughes Associates, Inc., MD [SE]
(Alt. to J. J. Beitel)
Ineke Van Zeeland, Canadian Wood Council, Canada [M]
(Alt. to R. A. McPhee)
Joe Ziolkowski, American Furniture Manufacturers Association, NC [M]
(Alt. to T. H. Talley)

Nonvoting

Robert H. Barker, American Fiber Manufacturers Association, VA [M]
Rohit Khanna, U.S. Consumer Product Safety Commission, MD [C]

Gregory E. Harrington, NFPA Staff Liaison

This list represents the membership at the time the Committee was balloted on the final text of this edition. Since that time, changes in the membership may have occurred. A key to classifications is found at the back of the document.

NOTE: Membership on a committee shall not in and of itself constitute an endorsement of the Association or any document developed by the committee on which the member serves.

Committee Scope: This Committee shall have primary responsibility for documents on fire testing procedures, for reviewing existing fire test standards and recommending appropriate action to NFPA, for recommending the application of and advising on the interpretation of acceptable test standards for fire problems of concern to NFPA technical committees and members, and for acting in a liaison capacity between NFPA and the committees of other organizations writing fire test standards. This Committee does not cover fire tests that are used to evaluate extinguishing agents, devices, or systems.

Copyright National Fire Protection Association
Provided by IHS under license with NFPA
No reproduction or networking permitted without license from IHS
Not for Resale

Contents

Chapter 1 Administration **259–** 4
1.1 Scope **259–** 4
1.2 Purpose **259–** 4
1.3 Units and Formulas **259–** 4
1.4 Test Method Summary **259–** 4

Chapter 2 Referenced Publications **259–** 4
2.1 General **259–** 4
2.2 NFPA Publications. (Reserved) **259–** 4
2.3 Other Publications **259–** 4
2.4 References for Extracts in Mandatory Sections. (Reserved) **259–** 4

Chapter 3 Definitions **259–** 4
3.1 General **259–** 4
3.2 NFPA Official Definitions **259–** 5
3.3 General Definitions **259–** 5

Chapter 4 Test Apparatus and Materials **259–** 5
4.1 Oxygen Bomb Calorimeter **259–** 5
4.2 Electric Muffle Furnace **259–** 5
4.3 Combustion Promoter **259–** 5

Chapter 5 Test Specimens **259–** 5
5.1 Specimens **259–** 5

Chapter 6 Oxygen Bomb Calorimeter Test Procedure **259–** 5
6.1 Specimen Preparation **259–** 5
6.2 Test Procedure **259–** 6

Chapter 7 Electric Muffle Furnace Test Procedure **259–** 6
7.1 Specimen Preparation **259–** 6
7.2 Test Procedure **259–** 6

Chapter 8 Calculating Potential Heat **259–** 7
8.1 Calculations with Not More Than 5 Percent Residue **259–** 7
8.2 Calculations with More Than 5 Percent Residue **259–** 7
8.3 Test Variation **259–** 7
8.4 Reporting Units **259–** 7

Chapter 9 Report **259–** 7
9.1 Required Information **259–** 7

Annex A Explanatory Material **259–** 7

Annex B Application of Potential Heat Data **259–** 9

Annex C Potential Heat of Selected Building Materials **259–**10

Annex D Informational References **259–**12

Index **259–**13

Copyright National Fire Protection Association
Provided by IHS under license with NFPA
No reproduction or networking permitted without license from IHS
Not for Resale

NFPA 259

Standard Test Method for

Potential Heat of Building Materials

2008 Edition

IMPORTANT NOTE: This NFPA document is made available for use subject to important notices and legal disclaimers. These notices and disclaimers appear in all publications containing this document and may be found under the heading "Important Notices and Disclaimers Concerning NFPA Documents." They can also be obtained on request from NFPA or viewed at www.nfpa.org/disclaimers.

NOTICE: An asterisk (*) following the number or letter designating a paragraph indicates that explanatory material on the paragraph can be found in Annex A.

Information on referenced publications can be found in Chapter 2 and Annex D.

Chapter 1 Administration

1.1* Scope. This method of test shall provide a means of determining, under controlled laboratory conditions, the potential heat of building materials subjected to a defined high-temperature exposure condition.

1.2* Purpose. This test method shall yield a property-type measurement of the amount of heat that can potentially be given off by building materials when they are exposed to a heat source at 750°C.

1.3 Units and Formulas.

1.3.1 SI Units. Units of measurement in this standard are in accordance with the modernized metric system known as the International System of Units (SI).

1.4 Test Method Summary.

1.4.1 One of four specimens removed from the material to be evaluated shall be pulverized, pelleted, and combusted in a high-pressure oxygen atmosphere. This shall determine the gross heat of combustion per unit mass of the material.

1.4.2 Another specimen shall be heated in air for 2 hours at a temperature of 750°C. The resulting residue of this specimen, if any, shall be ground or pulverized, mixed with a combustion promoter, and pelleted for combusting in the same manner as the first specimen.

1.4.3 After correcting for the heat produced by the combustion promoter, the difference in the measured heat per unit mass of the first specimen and the residue, if any, of the second specimen shall be the potential heat of the material as defined in Chapter 3.

1.4.4 The test procedure shall follow the schematic illustrated in Figure 1.4.4.

1.4.5* Test Limitations.

1.4.5.1 This test method shall not be used to measure heat release rates of materials.

1.4.5.2 These data alone shall not be used to describe the fire hazard of a material's specific end use or predict its response to real fires.

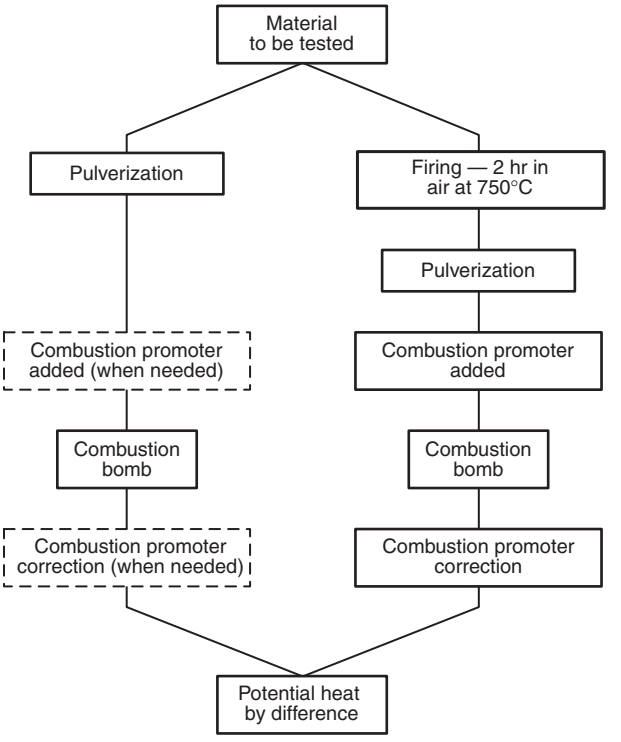

FIGURE 1.4.4 Schematic Diagram of Test Procedure for Potential Heat Measurements.

Chapter 2 Referenced Publications

2.1 General. The documents or portions thereof listed in this chapter are referenced within this standard and shall be considered part of the requirements of this document.

2.2 NFPA Publications. (Reserved)

2.3 Other Publications.

2.3.1 ASTM Publications. ASTM International, 100 Barr Harbor Drive, P.O. Box C700, West Conshohocken, PA 19428-2959.

ASTM D 2015, *Test Method for Gross Calorific Value of Solid Fuel by the Adiabatic Bomb Calorimeter,* 1995.

ASTM D 3286, *Test Method for Gross Calorific Value of Coal and Coke by the Isoperibol Bomb Calorimeter*, 1991a.

2.3.2 Other Publications.

Merriam-Webster's Collegiate Dictionary, 11th edition, Merriam-Webster, Inc., Springfield, MA, 2003.

2.4 References for Extracts in Mandatory Sections. (Reserved)

Chapter 3 Definitions

3.1 General. The definitions contained in this chapter shall apply to the terms used in this standard. Where terms are not defined in this chapter or within another chapter, they shall be defined using their ordinarily accepted meanings within the context in which they are used. *Merriam-Webster's Collegiate Dictionary,* 11th edition, shall be the source for the ordinarily accepted meaning.

Copyright National Fire Protection Association
Provided by IHS under license with NFPA
No reproduction or networking permitted without license from IHS
Not for Resale

3.2 NFPA Official Definitions.

3.2.1 Shall. Indicates a mandatory requirement.

3.2.2 Should. Indicates a recommendation or that which is advised but not required.

3.2.3 Standard. A document, the main text of which contains only mandatory provisions using the word "shall" to indicate requirements and which is in a form generally suitable for mandatory reference by another standard or code or for adoption into law. Nonmandatory provisions shall be located in an appendix or annex, footnote, or fine-print note and are not to be considered a part of the requirements of a standard.

3.3 General Definitions.

3.3.1 Potential Heat of a Material. The difference between the gross heat of combustion per unit mass of a representative specimen of the material and the heat of combustion per unit mass of any residue remaining after exposure of a representative specimen of the material to a defined heat source using combustion calorimetric techniques.

Chapter 4 Test Apparatus and Materials

4.1 Oxygen Bomb Calorimeter.

4.1.1 An oxygen bomb calorimeter shall be used to determine the gross heat of combustion of one test specimen.

4.1.2 Either the isoperibol bomb calorimeter specified in ASTM D 3286, *Test Method for Gross Calorific Value of Coal and Coke by the Isoperibol Bomb Calorimeter*, or the adiabatic bomb calorimeter specified in ASTM D 2015, *Test Method for Gross Calorific Value of Solid Fuel by the Adiabatic Bomb Calorimeter*, shall be used.

4.2 Electric Muffle Furnace.

4.2.1 General.

(A) An electric muffle furnace shall be used to heat the other test specimens.

(B) A small opening or port shall be provided in the furnace for the insertion of an air supply tube.

4.2.2 Specimen Container.

(A) The specimen container shall consist of a fused silica or ceramic container having a 32 mm inside diameter and a length of 102 mm.

(B) These dimensions shall be considered nominal.

4.2.3 Specimen Container Cap.

(A) The specimen container shall be provided with a cap that shall be made of material similar to the specimen container.

(B) The cap shall be snug fitting.

(C) An opening in the cap shall be provided for insertion of the air supply tube and shall be sized to allow a loose fit of the air supply tube.

4.2.4 Air Supply Tube.

(A) The air supply tube shall be made of porcelain, fused silica, or corrosion-resistant metal.

(B) The air supply tube shall have a minimum inside diameter of 5 mm, and its length shall be sufficient to extend beyond the opening in the specimen container cap.

4.2.5* Wire Specimen Holder.

(A) The wire specimen holder shall be formed to hold the test specimen away from the walls of the specimen container to allow free airflow around the test specimen.

(B) Corrosion-resistant wire shall be used to construct the holder.

4.2.6 Specimen Container Support. The specimen container support shall be made of fire brick or similar material, shaped to hold the specimen container and the specimen container cap in alignment with the small opening or port in the electric muffle furnace, allowing the air supply tube to be inserted through the small opening or port into the specimen container.

4.3* Combustion Promoter. The combustion promoter used in the oxygen bomb calorimeter shall be benzoic acid (Standard Reference Material SRM 39I, obtained from the National Institute of Standards and Technology) as the standard material for calorimetric determinations.

Chapter 5 Test Specimens

5.1* Specimens. A total of four conditioned representative test specimens shall be taken from the test material: one for the oxygen bomb calorimeter test procedure and three for the electric muffle furnace test procedure.

5.1.1 Each test specimen shall be conditioned until it has reached a constant mass within 1 mg in an environment maintained at 23°C ± 1°C and 50 percent ± 5 percent relative humidity.

5.1.2* If the test material is a composite, nonhomogeneous, or layered material, the various components of the test material shall be contained in each test specimen in the same proportions within ±5 percent of the original proportions as in the test material.

Chapter 6 Oxygen Bomb Calorimeter Test Procedure

6.1 Specimen Preparation.

6.1.1* One test specimen shall be pulverized or otherwise made into a powder form.

(A) The resultant powder shall be able to pass through a 0.25 mm (60 mesh) screen.

(B) The resulting mass of the test specimen shall not be less than 10 g of powder.

6.1.2 The surface dimensions of the test specimen used in this test procedure shall not be smaller than 13 mm × 76 mm.

6.1.3* During the pulverizing of the test specimen, care shall be taken to avoid segregation or separation of components.

(A) For composite, nonhomogeneous, or layered materials, a representative specimen shall be obtained by combining samples of material from each component or layer and from different locations in each component or layer.

Copyright National Fire Protection Association
Provided by IHS under license with NFPA
No reproduction or networking permitted without license from IHS
Not for Resale

(B) The resultant powder shall consist of an intimate mixture of all the components of the material in the same proportions (mass fractions) as the original test specimen.

6.1.4 A pellet having a mass of 1 g ± 0.9 g shall be prepared from an intimate mixture of the powder made from the test specimen.

6.1.5 All masses shall be measured to within 0.1 mg and recorded.

6.1.6 Pellets.

(A) The pellet shall be made in accordance with the method for the particular pelleting press used.

(B) The pellet shall be of a shape convenient for the specimen cup.

(C)* The pellet shall not be compressed more than is necessary to prevent its disintegration during preparation for combusting in the oxygen bomb calorimeter.

6.2 Test Procedure.

6.2.1* A minimum of two test procedures shall be performed.

6.2.2* The pellet shall be placed in the oxygen bomb calorimeter and tested in accordance with ASTM D 3286, *Test Method for Gross Calorific Value of Coal and Coke by the Isoperibol Bomb Calorimeter*, or ASTM D 2015, *Test Method for Gross Calorific Value of Solid Fuel by the Adiabatic Bomb Calorimeter*.

6.2.3 If, after being fired in the oxygen bomb calorimeter, the pellet is found to have burned completely or to have left residue or ash that has a mass less than 1 percent of the original pellet mass, the heat of combustion shall be computed.

(A) In this case, procedures set forth in 6.2.4 shall not be applicable.

(B) The mass of the residue and the heat of combustion shall be recorded.

6.2.4* If the pellet does not burn, or a residue or ash that has a mass of 1 percent or more of the original pellet mass remains after the firing, another 1 g ± 0.9 g pellet shall be prepared using equal portions of the original powdered test specimen and a standard specimen of combustion promoter.

(A) The mass of the residue shall be recorded.

(B) Each portion of the pellet shall have its mass measured to within 1 mg prior to pelletizing and recorded.

(C) The pellet's mass shall be measured to within 0.1 mg and recorded.

(D) The pellet prepared with the combustion promoter shall be tested in accordance with 6.2.2.

6.2.5 In calculating the heat of combustion for the test specimen tested in accordance with 6.2.4, a correction for the heat of combustion of the combustion promoter present in the pellet shall be applied to the measured heat given off by the specimen.

6.2.5.1 The gross heat of combustion of the test specimen shall then be computed and recorded.

6.2.6 A second test shall be conducted on another pellet made from the same test specimen in accordance with this chapter.

6.2.7 If the heat of combustion of the two test specimens differs by more than 10 percent of the larger value, then a third test shall be conducted on another pellet made from the same test specimen in accordance with this chapter.

Chapter 7 Electric Muffle Furnace Test Procedure

7.1 Specimen Preparation.

7.1.1 One test specimen of the conditioned test material shall be cut in the form of a rectangular prism 13 mm ± 3 mm × 19 mm ± 3 mm × 64 mm ± 13 mm.

7.1.2 When a test material has a thickness less than 13 mm, it shall be layered in pieces to meet the required minimum thickness for the test specimen.

7.1.3 When a homogeneous test material has a thickness greater than 76 mm, it shall be cut from the material to meet the size limitations specified in 7.1.1.

7.1.4 Nonhomogeneous or layered materials greater than 76 mm in thickness shall not be tested in accordance with this test method.

7.2 Test Procedure.

7.2.1 The electric muffle furnace shall be preheated to 750°C ± 10°C.

7.2.2 The mass of the test specimen shall be measured to within 0.1 mg and then placed on the wire specimen holder in the specimen container.

(A) The mass of the test specimen shall be recorded.

(B) The specimen container shall be closed using the specimen container cap and placed in the specimen container support.

7.2.3 The specimen container support containing the specimen on the wire specimen holder in the specimen container shall be placed in the electric muffle furnace.

(A) The muffle furnace port shall be aligned with the air supply tube opening in the specimen container cap.

(B) The external air supply tube shall then be passed through the muffle furnace port and through the air supply tube opening in the specimen container cap into the specimen container to the test specimen.

7.2.4 The test specimen shall remain in the electric muffle furnace for 2 hours ± 1 minute.

(A) A regulated airflow shall be supplied to the test specimen at 47 cm^3/sec ± 5 cm^3/sec referenced to 20°C and 101 kPa.

(B) If ignition should occur immediately upon placing the test specimen in the electric muffle furnace, forced-air supply shall be delayed until the initial flaming has stopped.

7.2.5 Upon completion of the 2-hour furnace test, the specimen container with the test specimen shall be removed from the electric muffle furnace and cooled in a desiccator.

7.2.5.1 After cooling to room temperature, the mass of the residue shall be determined to within 0.1 mg and recorded.

7.2.6 If the mass of the residue remaining after the electric muffle furnace test procedure is not more than 5 percent of the initial mass of the test specimen, the provisions of 7.2.7 shall not be applicable, and the heat of combustion previously

Copyright National Fire Protection Association
Provided by IHS under license with NFPA
No reproduction or networking permitted without license from IHS
Not for Resale

determined under the oxygen bomb calorimeter test described in Chapter 6 shall be recorded as the potential heat of the material.

7.2.7 If the mass of the residue remaining after the electric muffle furnace test procedure is in excess of 5 percent of the mass of the initial test specimen, the residue shall be pulverized into a homogeneous powder.

(A) A portion of the residue shall be mixed with an equal mass combustion promoter and formed into a 1 g ± 0.9 g pellet.

(B) The mass of the residue and combustion promoter used to make the pellet, and the pellet itself, shall be measured to within 0.1 mg and recorded.

(C) The pellet shall then be treated as specified in the oxygen bomb calorimeter test procedure in Chapter 6 to determine the heat of combustion of the residue.

(D) The heat of combustion of the residue per unit mass of the original test specimen shall be computed by multiplying the heat of combustion determined in 7.2.7(C) by the ratio of the residue mass determined in 7.2.5.1 to the original test specimen mass and recorded.

7.2.8 A second test shall be conducted on another test specimen in accordance with this chapter.

7.2.9 If the heat of combustion of the two test specimens differs by more than 10 percent of the larger value, then a third test shall be conducted on another test specimen in accordance with this chapter.

Chapter 8 Calculating Potential Heat

8.1 Calculations with Not More Than 5 Percent Residue.

8.1.1 The potential heat for test specimens that yield a residue from the electric muffle furnace test procedure described in Chapter 7 having a mass of not more than 5 percent of the test specimen's initial mass shall be considered to be equivalent to the test specimen's heat of combustion as determined by the oxygen bomb calorimeter test described in Chapter 6.

8.1.2 This value shall be recorded as the test specimen's potential heat.

8.2 Calculations with More Than 5 Percent Residue.

8.2.1 For test specimens that yield a residue from the electric muffle furnace test procedure described in Chapter 7 having a mass of more than 5 percent of the initial test specimen's mass, the potential heat shall be determined as in 8.2.2.

8.2.2* The heat of combustion of the residue as determined in accordance with 7.2.7 shall be subtracted from the heat of combustion of the test specimen as determined by the oxygen bomb calorimeter test described in Chapter 6.

8.2.2.1 This value shall be recorded as the potential heat of the test specimen.

8.3 Test Variation.

8.3.1 The results of the two test procedures required in 6.2.1 shall be within 10 percent of each other.

8.3.2 If the test results exceed 10 percent variation, then the average of three tests shall be reported.

8.4* Reporting Units. Potential heat shall be reported as the quantity of heat per unit mass calculated in accordance with this chapter.

Chapter 9 Report

9.1 Required Information. The test report shall include the following information:

(1) Material identification code or number
(2) Manufacturer or submitter
(3) Date of test
(4) Operator
(5) Composition or generic identification of material
(6) Material thickness in millimeters (inches)
(7) Specimen mass in grams (ounces)
(8) Material color(s) and description
(9) Details of specimen preparation by the testing laboratory
(10) Number of replicate specimens tested under the same conditions
(11) ASTM test procedure used for the oxygen bomb calorimeter
(12) Pellet mass in grams (ounces)
(13) Mass of residue, if any, remaining after the oxygen bomb calorimeter test in grams (ounces), as described in Chapter 6
(14) Combustion promoter used and its heat of combustion per unit mass in kJ/kg (Btu/lb)
(15) Mass fractions of combustion promoter and test specimen, or residue for pellets in grams (ounces), as tested in accordance with 6.2.3 and 7.2.7
(16) Gross heat of combustion per unit mass of each pellet in kJ/kg (Btu/lb) made from the test specimen as determined in accordance with the oxygen bomb calorimeter test procedure described in Chapter 6
(17) Mass of the residue remaining after the electric muffle furnace test in grams (ounces), as described in Chapter 7
(18) Gross heat of combustion per unit mass of the residue remaining after the electric muffle furnace test in kJ/kg (Btu/lb), as described in Chapter 7 and as determined in accordance with 7.2.7
(19) Potential heat of each specimen in kJ/kg (Btu/lb)
(20) Potential heat of the material in kJ/kg (Btu/lb)
(21) Method used for determining the potential heat of the material in accordance with Chapter 8

Annex A Explanatory Material

Annex A is not a part of the requirements of this NFPA document but is included for informational purposes only. This annex contains explanatory material, numbered to correspond with the applicable text paragraphs.

A.1.1 Determinations can be made on individual homogeneous or individual composite, nonhomogeneous, or layered materials from which a representative sample can be taken.

A.1.2 It is essential that the information on application of potential heat data in Annex B be consulted prior to applying test results.

A.1.4.5 In general, heat release rates of materials can be determined by such bench scale test methods as ASTM E 906, *Standard Method of Test for Heat and Visible Smoke Release Rates for*

Copyright National Fire Protection Association
Provided by IHS under license with NFPA
No reproduction or networking permitted without license from IHS
Not for Resale

Materials and Products; NFPA 271, *Standard Method of Test for Heat and Visible Smoke Release Rates for Materials and Products Using an Oxygen Consumption Calorimeter* [or ASTM E 1354, *Standard Test Method for Heat and Visible Smoke Release Rates for Materials and Products Using an Oxygen Consumption Calorimeter (Cone Calorimeter)*]; and ASTM E 1474, *Standard Test Method for Determining the Heat Release Rate of Upholstered Furniture and Mattress Components or Composites Using a Bench Scale Oxygen Consumption Calorimeter*, for upholstered furniture and mattress composites. For determining heat release rates of specific products such as upholstered furniture, mattresses, textile wall coverings, and interior finish, ASTM E 1537, *Standard Test Method for Fire Testing of Upholstered Seating Furniture*; ASTM E 1590, *Standard Fire Test for Fire Testing of Mattresses*; NFPA 265, *Standard Methods of Fire Tests for Evaluating Room Fire Growth Contribution of Textile Coverings on Full Height Panels and Walls*; and NFPA 286, *Standard Methods of Fire Tests for Evaluating Contribution of Wall and Ceiling Interior Finish to Room Fire Growth*, respectively, can be used.

Nonhomogeneous or layered materials greater than 76 mm in thickness cannot be tested in accordance with this test method due to specimen size limitations.

A.4.2.5 Figure A.4.2.5 shows a typical configuration of a wire specimen holder used with the electric muffle furnace tests.

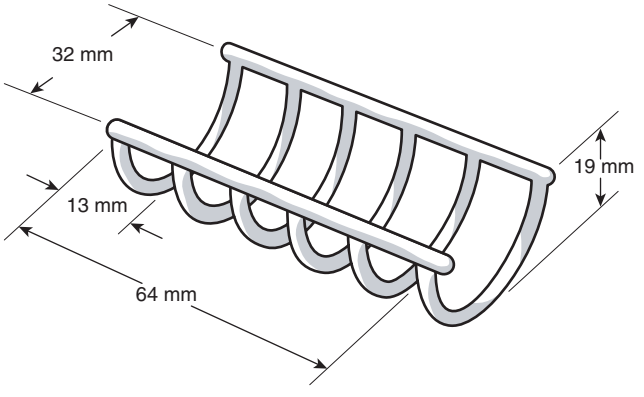

FIGURE A.4.2.5 Wire Specimen Holder for Muffle Furnace Firing.

A.4.3 At least one testing laboratory has experienced some difficulty in achieving consistent results for materials that contain $CaCO_3$, $CaSO_4$, or $CaSiO_3$, since apparently these chemicals (inorganic salts) tend to react endothermically with the benzoic acid combustion promoter. Such a reaction has been described as follows:

$$CaSO_4 + 2C = CaS + 2CO_2$$

When this reaction occurs, two corrections generally are required to be made to the gross heat of combustion determined by the oxygen bomb calorimetry method: a correction for the unburned benzoic acid as prescribed in the test procedure and a correction for the endothermic redox reaction described in the equation. Both of these corrections can be roughly estimated by quantification of sulfur in the bomb residue. Experimentation with other combustion promoters discovered that paraffin oil worked best and provided the most consistent results when such chemicals were present in the materials being evaluated.

It should be noted that this phenomenon has been found in the presence of calcium-containing materials and is probably an acid–base reaction. Therefore, it is also likely to occur also with any materials that are alkaline, such as metal hydroxides, with some inorganic salts, or with some other similar chemicals as well. However, it has not been investigated with materials for which acid–base reactions do not occur. Thus, the testing laboratory should be suspicious of the use of benzoic acid when significant errors or variations occur in the gross heat of combustion determined by this method. In those cases, it can be appropriate to use a paraffin oil combustion promoter. An appropriate paraffin oil should have a known heat of combustion and contain 99.5 percent paraffinic hydrocarbons. For example, a value of gross heat of combustion of 46.2 MJ/kg is referenced for a particular type of paraffin oil in *The SFPE Handbook of Fire Protection Engineering*. It should also be noted that the heat of combustion of paraffin oil can cover a range of values, depending on its chemical composition. The following information has not been independently verified, certified, or endorsed by the NFPA or this technical committee: The paraffin oil distributed by the Zeco Corporation as part No. 501-439, which has a heat of combustion of 45.5 MJ/kg ± 0.1 MJ/kg, has been found suitable by at least one laboratory.

A.5.1 For the sizes of the test specimens, see 6.1.2 and Section 7.1.

A.5.1.2 For example, a 1 percent proportion should have a range of 0.95 percent to 1.05 percent.

A.6.1.1 While many materials can be suitably made into a powder form using a clean carbide double-bastard file or mortar and pestle, or both, it can sometimes be useful to freeze (with dry ice) materials containing asphaltic, mastic, or plastic components prior to filing, or to use mechanical blenders, ball or hammer mills, grinders, milling or lathe cutters, and so on. For laminated materials, it can be preferable to separate the test specimen into component layers and to grind, file, or pulverize each component separately. The powdered components then can be mixed intimately in proportion to their original mass fractions and the mixture tested, or each component can be tested separately and the contributions of heat combined in proportion to each component's original mass fraction.

A.6.1.3 Any loss in the mass of the component materials during the making of the powder, including mixing and pelletizing, should be subtracted from the mass of the specimen and the combustion promoter, if used, in proportion to their original mass fractions and the corrected masses used in the heat of combustion calculations.

A.6.1.6(C) Excessively hard pellets can fracture and result in incomplete combustion when fired.

A.6.2.1 See Section 8.3.

A.6.2.2 CAUTION: For tests on specimens that are predominantly metallic, the use of a silica or quartz crucible is recommended. The water equivalent of the calorimeter using the appropriate crucible should be measured and used.

A.6.2.4 See A.6.1.3.

A.8.2.2 The potential heat is a measure of the heat given off by a material in the electric muffle furnace test.

A.8.4 Where appropriate, potential heat can be reported as the quantity of heat per unit volume or surface area. For materials such as metals where the combustion process is relatively slow and is a function of surface area, the potential heat can be reported appropriately on a surface area basis.

Copyright National Fire Protection Association
Provided by IHS under license with NFPA
No reproduction or networking permitted without license from IHS
Not for Resale

Annex B Application of Potential Heat Data

This annex is not a part of the requirements of this NFPA document but is included for informational purposes only.

B.1 Application of Potential Heat Data. This potential heat test method provides an assessment of one property of a material — the total heat given off that is possible with an electric muffle furnace exposure of the test specimen, under oxidizing conditions, at 750°C. The appropriate use of this procedure should recognize its nature as a property-type test. *(See Robertson, "Test Method Categorization and Fire Hazard Standards.")* In many applications, additional supporting test data by other fire test methods can be required for qualifying materials for various fire safety applications. For example, it should be recognized that under actual fire conditions some materials release all or most of their heat rapidly. Other materials release heat slowly and, depending on thickness and fire conditions, can never release all the heat possible. Information on the actual end use of the material in conjunction with additional supporting data is usually needed for classifying the material.

Some materials, such as gypsum and concrete, can have negative values for potential heat as determined by this test method. Such materials contain certain chemical compounds that react endothermically during the oxidation process or have water of hydration or free water, which also absorbs heat. If these materials also have little organic content, then it is possible that they will be determined to have a negative potential heat. *(See Annex C.)*

B.2 The Test Method. The potential heat test method *(see Loftus, Gross, and Robertson, "Potential Heat, a Method for Measuring the Heat Release of Materials in Building Fires")* makes use of oxygen bomb calorimetric measurement methods. It measures the difference between the heat of combustion of a test specimen as determined by an oxygen bomb calorimeter and that of the residue remaining after exposure of another test specimen to a standardized intense thermal exposure using an electric muffle furnace. Results of the test method are usually reported in terms of heat given off per unit mass of the specimen involved.

The test procedure is based on combustion of the specimen as complete as is possible within a 2-hour exposure period in an electric muffle furnace at 750°C.

The oxygen bomb calorimetry techniques use small test specimens of about 1 g mass. Because of this, the sampling and specimen preparation procedures used are of considerable importance, especially with heterogeneous, layered, or composite materials. For such materials, two procedures are available to the investigator. One involves pulverizing a representative section of the complete composite and then testing the resultant mixture in the form of a small pellet. Another involves measuring the potential heat of the individual components of the material and then, on the basis of computations, deriving an overall value for the composite.

The selection of a test specimen for thermal exposure in the electric muffle furnace will, of course, depend on which preparation procedure is to be used.

The electric muffle furnace exposure must be severe, involving combustion of most of the oxidizable material at 750°C; this is essential for its consideration as a property-type test method. This factor must be carefully considered when potential heat data are applied as a basis of code or regulatory procedures for building or other fire safety purposes. This is especially true when life safety is of prime concern.

For example, the potential heat of two wall components can be identical, yet in one wall the combustible component might be placed on the exposed wall surface while in the other it might be buried deep beneath an exposed masonry construction. In the hazard presented by a wall to building occupants in the event of a fire, these walls represent two possible extremes. Thus, simple consideration of the potential heat of the wall materials yields little information on the relative fire participation hazard of the two walls. This problem is characteristic of property-type fire tests. It emphasizes the need for discretion in the use of the test methods and in the application of the resulting test data.

B.3 Auxiliary Tests. As indicated in Section B.2, property-type fire tests are seldom comprehensive enough to form the sole basis of acceptance of materials or products. Additional tests are usually required. Examples of other types of tests of possible value in evaluating the fire hazard materials include the adiabatic furnace, a smoldering test, heat release rate calorimeter, and flame spread tests. *(See Gross and Robertson, "Self-Ignition Temperatures of Materials from Kinetic Reaction Data"; Parker and Long, "Development of a Heat Release Rate Calorimeter at NBS"; ASTM E 162, Standard Test Method for Surface Flammability of Materials Using a Radiant Heat Energy Source; NFPA 255, Standard Method of Test of Surface Burning Characteristics of Building Materials; and NFPA 271, Standard Method of Test for Heat and Visible Smoke Release Rates for Materials and Products Using an Oxygen Consumption Calorimeter.)* Only the flame spread and heat release rate tests have received recognition by national standards organizations. The smoldering and adiabatic furnace tests have not yet received recognition as standards, although numerous ad hoc tests of both have been conducted as the need for them has become obvious.

B.4 Precision of the Potential Heat Test Method. The original paper on this test method *(see Loftus, Gross, and Robertson, "Potential Heat, A Method for Measuring the Heat Release of Materials in Building Fires")* discussed the precision level possible within a single laboratory (repeatability). It was concluded that with technicians skilled in the procedure involved, the standard deviation of differences between duplicate determinations of potential heat would be equal to about 219 kJ/kg. This prediction, based on early work at the National Bureau of Standards (NBS), now the National Institute of Standards and Technology (NIST), was later confirmed for three of the five materials tested in the interlaboratory study. *(See Gross and Natrella, Interlaboratory Comparison of the Potential Heat Test Method.)* In this reference, a value of 214 kJ/kg was reported. This value corresponds to expected repeatability between duplicates of 465 kJ/kg with a 95 percent confidence level.

In the original paper, it was stated that this order of repeatability was independent of the potential heat measured. The basis of this claim is illustrated in the chart in Figure B.4. This figure represents plotted data of the difference between duplicate determinations of potential heat as a function of the average. Because of the precision, most of the recent measurements of potential heat have involved a single determination and thus are not useful for this plot. The materials represented by the data make up a widely varied group. They include materials of laminated, homogeneous, and heterogeneous characteristics. Both very low and very high values of potential heat are shown. Different symbols are used as a means for identification of slightly different procedures used for deriving the data. Thus, all the data above 18,600 kJ/kg represent a single calorimetric determination as permitted by the test procedure when negligible ash remains following the

Copyright National Fire Protection Association
Provided by IHS under license with NFPA
No reproduction or networking permitted without license from IHS
Not for Resale

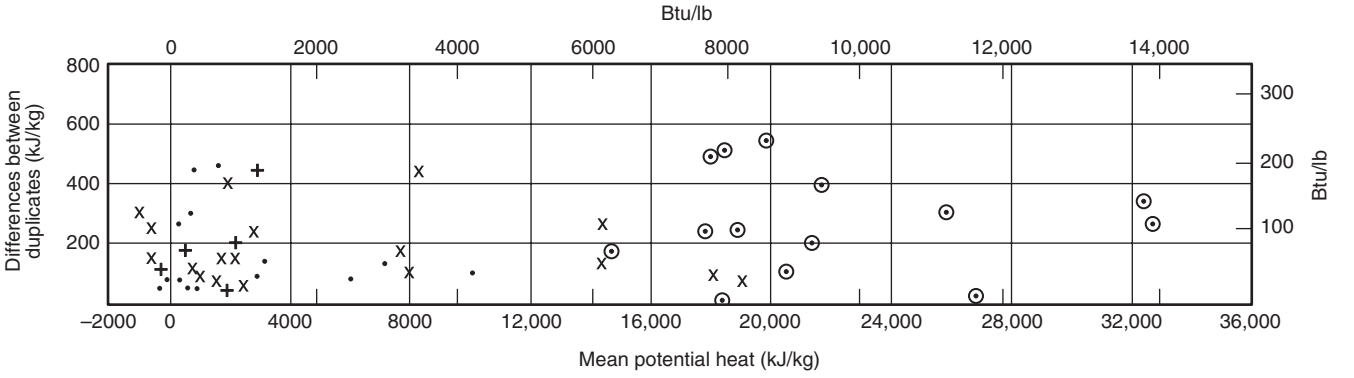

Note: Chart represents deviation between duplicates as a function of average potential heat for a wide range of materials.

Data points represent:
- x Specified procedure, two determinations on both material and muffled specimen
- + Specified procedure NBS data from round robin study *(see ASTM STP 464)*
- • Specified procedure but only one test of muffled specimen
- ⊙ Specified procedure for materials of low ash content, no test on muffled specimen

FIGURE B.4 NBS Data Difference Between Duplicate Potential Heat Measurements, as a Function of the Average.

test specimen exposure in the electric muffle furnace. The data reproduced as dots are based on two oxygen bomb calorimetric determinations and one measurement of the heat of combustion of the ash from an electric muffle furnace–exposed test specimen. All remaining data are based on duplicate determinations of both the oxygen bomb–exposed test specimen and the muffle furnace–exposed test specimen. It should be noted that all the NBS (NIST) data derived in connection with the interlaboratory study *(see Gross and Natrella, Interlaboratory Comparison of the Potential Heat Test Method)* are included in Figure B.4. Thus, the figure tends to confirm the predictions made with regard to reproducibility in that study.

Actually, the test procedure has been slightly modified from that used in the last interlaboratory test, with the objective of improving the precision on those materials that proved most difficult in the study. These changes have included more detailed instructions on the preparation of specimens from laminated materials or those of nonhomogeneous character, and the fact that four of the eleven laboratories participating in the interlaboratory study were successful in producing data for all materials that were within 465 kJ/kg. Repeatability and reproducibility values reported, based on three of the materials, would also be applicable to the full range of materials likely to be tested in the future. These precision levels involve a repeatability within a laboratory of 465 kJ/kg and a reproducibility between laboratories of 1160 kJ/kg based on duplicate tests. Thus, the procedure appears to provide adequate precision when skilled laboratory technical work is available.

Annex C Potential Heat of Selected Building Materials

This annex is not a part of the requirements of this NFPA document but is included for informational purposes only.

C.1 Table C.1 is reprinted here from Loftus, Gross, and Robertson, "Potential Heat, a Method for Measuring the Heat Release of Materials in Building Fires," as information for the user of this document.

Copyright National Fire Protection Association
Provided by IHS under license with NFPA
No reproduction or networking permitted without license from IHS
Not for Resale

Table C.1 Potential Heat of Selected Building Materials

Material	Thickness (in.)	Density (lb/ft^3)	Potential Heat, Weight Basis (Btu/lb)
1. Woods			
a. Douglas fir, untreated	¾	38.0	8,400
b. Douglas fir (retardant treatment "A")	¾	37.2	8,290
c. Douglas fir (retardant treatment "B")	¾	47.2	7,850
d. Douglas fir (retardant treatment "C")	¾	38.8	7,050
e. Maple soft, untreated	1	39.5	7,940
f. Hardboard, untreated	¼	59.8	8,530
2. Plastics			
a. Polystyrene, wall tile	0.075	65.4	17,420
b. Rigid, polyvinyl chloride, retardant treated	0.147	86.0	9,290
c. Phenolic laminate	0.063	76.4	7,740
d. Polycarbonate resin	¼	78.7	13,330
3. Insulation			
a. Glass fiber, semirigid, no vapor barrier	1	3.0	3,040
b. Rock wool batting, paper enclosure	3	2.4	1,050
c. Roof insulation board	1	10.4	3,380
d. Cork (reconstituted cork sheet)	¼	14.8	11,110
e. Cellulose mineral board	2	47.8	2,250
4. Concrete			
a. Cinder aggregate	—	93.0	3,080
b. Slag aggregate	—	110.1	80
c. Shale aggregate	—	80.5	10
d. Calcareous gravel aggregate	—	133.1	–250
e. Siliceous gravel aggregate	—	166.8	–40
5. Cement Board			
a. Asbestos cement board	3⁄16	117.0	80
b. Asbestos cement board + 20 mil paint	3⁄16	159.2	390
6. Gypsum			
a. $CaSO_4 \cdot H_2O$ hydrated neat gypsum	0.41	137.9	–290
b. Perlite aggregate plaster, 21 percent aggregate	1	53.2	70
c. Sand aggregate plaster, 15 percent aggregate	1	101.8	–50
d. Vermiculite aggregate plaster, 15 percent aggregate	1	51.2	–90
e. Gypsum board "A"	⅜	50.5	760
f. Gypsum board "A" with paper removed	⅜	46.6	–270
g. Gypsum board "A" + alkyd gloss paint	⅜	46.7	880
h. Gypsum board "B"	½	51.2	650
7. Lath			
a. Gypsum A	⅜	55.3	310
b. Metal diamond mesh	0.025	405.0	1,230
c. Metal diamond mesh, paint removed	0.019	401.0	660
8. Metals			
a. Structural steel, unpainted	0.060	489	230
b. Magnesium	0.128	122	10,800
c. Aluminum	0.004	165	30
d. Brass	0.004	534	100
e. Copper	0.024	556	60
f. Lead	0.036	710	280
g. Zinc	—	415	760
9. Miscellaneous			
a. Paint "E" (dried paint film)	0.05		3,640
b. Asphalt shingles (fire retardant)	¼	70.7	8,320
c. Building paper (asphalt-impregnated)	0.042	42.8	13,620
d. Building paper (rosin-sized)	0.018	23.6	7,650
e. Linoleum tile	⅛	86.0	7,760
f. Brick, red-face	2¼	139.1	20
g. Charcoal, coconut	—	—	13,870

Note: All weights and percentages refer to original air-dry weight.

Copyright National Fire Protection Association
Provided by IHS under license with NFPA
No reproduction or networking permitted without license from IHS
Not for Resale

Annex D Informational References

D.1 Referenced Publications. The documents or portions thereof listed in this annex are referenced within the informational sections of this standard and are not part of the requirements of this document unless also listed in Chapter 2 for other reasons.

D.1.1 NFPA Publications. National Fire Protection Association, 1 Batterymarch Park, Quincy, MA 02169-7471.

NFPA 255, *Standard Method of Test of Surface Burning Characteristics of Building Materials*, 2006 edition.

NFPA 265, *Standard Methods of Fire Tests for Evaluating Room Fire Growth Contribution of Textile Coverings on Full Height Panels and Walls*, 2007 edition.

NFPA 271, *Standard Method of Test for Heat and Visible Smoke Release Rates for Materials and Products Using an Oxygen Consumption Calorimeter*, 2004 edition.

NFPA 286, *Standard Methods of Fire Tests for Evaluating Contribution of Wall and Ceiling Interior Finish to Room Fire Growth*, 2006 edition.

The SFPE Handbook of Fire Protection Engineering, 3rd edition, 2002, p. A-41–A-42, Table C.4.

D.1.2 Other Publications.

D.1.2.1 ASTM Publications. ASTM International, 100 Barr Harbor Drive, P.O. Box C700, West Conshohocken, PA 19428-2959.

ASTM E 162, *Standard Test Method for Surface Flammability of Materials Using a Radiant Heat Energy Source*, 1998.

ASTM E 906, *Standard Method of Test for Heat and Visible Smoke Release Rates for Materials and Products*, 1999.

ASTM E 1354, *Standard Test Method for Heat and Visible Smoke Release Rates for Materials and Products Using an Oxygen Consumption Calorimeter (Cone Calorimeter)*, 2002.

ASTM E 1474, *Standard Test Method for Determining the Heat Release Rate of Upholstered Furniture and Mattress Components or Composites Using a Bench Scale Oxygen Consumption Calorimeter*, 2002.

ASTM E 1537, *Standard Test Method for Fire Testing of Upholstered Seating Furniture*, 2002.

ASTM E 1590, *Standard Fire Test for Fire Testing of Mattresses*, 2001.

Gross, D., and M. G. Natrella. ASTM STP 464, *Interlaboratory Comparison of the Potential Heat Test Method*, 1970, pp. 127–152.

Loftus, J. J., D. Gross, and A. F. Robertson. "Potential Heat, a Method for Measuring the Heat Release of Materials in Building Fires," *ASTM Proceedings*, Vol. 61, 1961, pp. 1336–1348.

Parker, W. J., and M. E. Long. "Development of a Heat Release Rate Calorimeter at NBS," in ASTM STP 502, *Ignition, Heat Release and Noncombustibility of Materials*, 1972, pp. 135–151.

Robertson, A. F. "Test Method Categorization and Fire Hazard Standards," *ASTM Standardization News*, Nov. 1975, pp. 18–20.

D.1.2.2 NIST Publications. National Institute of Standards and Technology (formerly National Bureau of Standards), 100 Bureau Drive, Gaithersburg, MD 20899-1070.

Gross, D., and A. F. Robertson. "Self-Ignition Temperatures of Materials from Kinetic Reaction Data," *J. Res. NBS*, Vol. 61, no. 5, Nov. 1958, pp. 413–417.

D.2 Informational References. (Reserved)

D.3 References for Extracts in Informational Sections. (Reserved)

Copyright National Fire Protection Association
Provided by IHS under license with NFPA
No reproduction or networking permitted without license from IHS
Not for Resale

Index

Copyright © 2007 National Fire Protection Association. All Rights Reserved.

The copyright in this index is separate and distinct from the copyright in the document that it indexes. The licensing provisions set forth for the document are not applicable to this index. This index may not be reproduced in whole or in part by any means without the express written permission of NFPA.

-A-

Air supply tubes ..... 4.2.1(B), 4.2.4
Apparatus and materials ..... Chap. 4
Auxiliary tests B.3

-B-

Building materials, potential heat of ..... *see* Potential heat

-C-

Calculations, potential heat ..... Chap. 8
More than 5 percent residue 8.2, A.8.2.2
Not more than 5 percent residue 8.1
Reporting units 8.4, A.8.4
Test variation 8.3
Calorimeters, oxygen bomb ..... *see* Oxygen bomb calorimeters
Combustion promoters 4.3, A.4.3

-D-

Definitions ..... Chap. 3

-E-

Electric muffle furnace
Test method ..... Chap. 7
Specimen preparation 7.1
Test procedure 7.2, B.2
Use of 4.2, A.4.2.5

-F-

Furnace, electric muffle ..... *see* Electric muffle furnace

-H-

Heat of combustion ..... 1.4, 6.2.5, 7.2.7(C)
Heat release rates 1.4.5.1

-M-

Measurement, units of 1.3

-O-

Oxygen bomb calorimeter
Test method ..... Chap. 6, B.2
Specimen preparation 6.1, A.6.1.1
Test procedure 6.2, A.6.2
Use of 4.1

-P-

Potential heat
Application of data ..... Annex B
Calculation of ..... Chap. 8
Of a material (definition) 3.3.1
Selected building materials ..... Annex C
Testing for ..... *see* Test method
Purpose of standard 1.2, A.1.2

-R-

References ..... Chap. 2, Annex D
Reports ..... Chap. 9

-S-

Scope of standard 1.1, A.1.1
Shall (definition) 3.2.1
Should (definition) 3.2.2
SI units 1.3.1
Specimen container caps 4.2.3
Specimen containers 4.2.2
Specimen container supports 4.2.6
Specimens
Preparation of
Electric muffle furnace test 7.1
Oxygen bomb calorimeter test 6.1, A.6.1.3, B.2
Pellets ..... 6.1.4, 6.1.6, A.6.1.6(C)
Selection of 5.1, A.5.1, B.2
Standard (definition) 3.2.3

-T-

Test apparatus and materials ..... Chap. 4
Test method 1.4, A.1.4.5, B.2
Electric muffle furnace ..... Chap. 7
Limitations of 1.4.5, A.1.4.5
Oxygen bomb calorimeter ..... Chap. 6
Precision of B.4

-U-

Units of measurement 1.3

-W-

Wire specimen holders 4.2.5, A.4.2.5

Copyright National Fire Protection Association
Provided by IHS under license with NFPA
No reproduction or networking permitted without license from IHS
Not for Resale

Sequence of Events Leading to Issuance of an NFPA Committee Document

Step 1: Call for Proposals

- Proposed new Document or new edition of an existing Document is entered into one of two yearly revision cycles, and a Call for Proposals is published.

Step 2: Report on Proposals (ROP)

- Committee meets to act on Proposals, to develop its own Proposals, and to prepare its Report.
- Committee votes by written ballot on Proposals. If two-thirds approve, Report goes forward. Lacking two-thirds approval, Report returns to Committee.
- Report on Proposals (ROP) is published for public review and comment.

Step 3: Report on Comments (ROC)

- Committee meets to act on Public Comments to develop its own Comments, and to prepare its report.
- Committee votes by written ballot on Comments. If two-thirds approve, Report goes forward. Lacking two-thirds approval, Report returns to Committee.
- Report on Comments (ROC) is published for public review.

Step 4: Technical Report Session

- "*Notices of intent to make a motion"* are filed, are reviewed, and valid motions are certified for presentation at the Technical Report Session. ("Consent Documents" that have no certified motions bypass the Technical Report Session and proceed to the Standards Council for issuance.)
- NFPA membership meets each June at the Annual Meeting Technical Report Session and acts on Technical Committee Reports (ROP and ROC) for Documents with "certified amending motions."
- Committee(s) vote on any amendments to Report approved at NFPA Annual Membership Meeting.

Step 5: Standards Council Issuance

- Notification of intent to file an appeal to the Standards Council on Association action must be filed within 20 days of the NFPA Annual Membership Meeting.
- Standards Council decides, based on all evidence, whether or not to issue Document or to take other action, including hearing any appeals.

Committee Membership Classifications

The following classifications apply to Technical Committee members and represent their principal interest in the activity of the committee.

M	*Manufacturer:* A representative of a maker or marketer of a product, assembly, or system, or portion thereof, that is affected by the standard.
U	*User:* A representative of an entity that is subject to the provisions of the standard or that voluntarily uses the standard.
I/M	*Installer/Maintainer:* A representative of an entity that is in the business of installing or maintaining a product, assembly, or system affected by the standard.
L	*Labor:* A labor representative or employee concerned with safety in the workplace.
R/T	*Applied Research/Testing Laboratory:* A representative of an independent testing laboratory or independent applied research organization that promulgates and/or enforces standards.
E	*Enforcing Authority:* A representative of an agency or an organization that promulgates and/or enforces standards.
I	*Insurance:* A representative of an insurance company, broker, agent, bureau, or inspection agency.
C	*Consumer:* A person who is, or represents, the ultimate purchaser of a product, system, or service affected by the standard, but who is not included in the *User* classification.
SE	*Special Expert:* A person not representing any of the previous classifications, but who has a special expertise in the scope of the standard or portion thereof.

NOTES;
1. "Standard" connotes code, standard, recommended practice, or guide.
2. A representative includes an employee.
3. While these classifications will be used by the Standards Council to achieve a balance for Technical Committees, the Standards Council may determine that new classifications of members or unique interests need representation in order to foster the best possible committee deliberations on any project. In this connection, the Standards Council may make appointments as it deems appropriate in the public interest, such as the classification of "Utilities" in the National Electrical Code Committee.
4. Representatives of subsidiaries of any group are generally considered to have the same classification as the parent organization.

Copyright National Fire Protection Association
Provided by IHS under license with NFPA
No reproduction or networking permitted without license from IHS
Not for Resale

NFPA Technical Committee Document Proposal Form

NOTE: All Proposals must be received by 5:00 pm EST/EDST on the published Proposal Closing Date.

For further information on the standards-making process, please contact the Codes and Standards Administration at 617-984-7249 or visit www.nfpa.org/codes.

For technical assistance, please call NFPA at 1-888-344-3555.

FOR OFFICE USE ONLY

Log #:

Date Rec'd:

Please indicate in which format you wish to receive your ROP/ROC ☐ **electronic** ☐ **paper** ☒ **download**
(Note: If choosing the download option, you must view the ROP/ROC from our website; no copy will be sent to you.)

Date April 1, 200X **Name** John J. Doe **Tel. No.** 716-555-1234

Company Air Canada Pilot's Association

Street Address 123 Summer Street Lane **City** Lewiston **State** NY **Zip** 14092

Please indicate organization represented (if any)

1. (a) NFPA Document Title National Fuel Gas Code **NFPA No. & Year** 54, 200X Edition

(b) Section/Paragraph 3.3

2. Proposal Recommends (check one): ☐ new text ☒ revised text ☐ deleted text

3. Proposal (include proposed new or revised wording, or identification of wording to be deleted): [Note: Proposed text should be in legislative format; i.e., use underscore to denote wording to be inserted (inserted wording) and strike-through to denote wording to be deleted (~~deleted wording~~).]

Revise definition of effective ground-fault current path to read:

3.3.78 Effective Ground-Fault Current Path. An intentionally constructed, permanent, low impedance electrically conductive path designed and intended to carry ~~underground~~ electric fault current ~~conditions~~ from the point of a ground fault on a wiring system to the electrical supply source.

4. Statement of Problem and Substantiation for Proposal: (Note: State the problem that would be resolved by your recommendation; give the specific reason for your Proposal, including copies of tests, research papers, fire experience, etc. If more than 200 words, it may be abstracted for publication.)

Change uses proper electrical terms.

5. Copyright Assignment

(a) ☐ **I am the author of the text or other material (such as illustrations, graphs) proposed in this Proposal.**

(b) ☒ **Some or all of the text or other material proposed in this Proposal was not authored by me. Its source is as follows** (please identify which material and provide complete information on its source)**:**

ABC Co.

I agree that any material that I author, either individually or with others, in connection with work performed by an NFPA Technical Committee shall be considered to be works made for hire for the NFPA. To the extent that I retain any rights in copyright as to such material, or as to any other material authored by me that I submit for the use of an NFPA Technical Committee in the drafting of an NFPA code, standard, or other NFPA document, I hereby grant and assign all and full rights in copyright to the NFPA. I further agree and acknowledge that I acquire no rights in any publication of the NFPA and that copyright and all rights in materials produced by NFPA Technical Committees are owned by the NFPA and that the NFPA may register copyright in its own name.

Signature (Required)

PLEASE USE SEPARATE FORM FOR EACH PROPOSAL • NFPA Fax: (617) 770-3500

Mail to: Secretary, Standards Council, National Fire Protection Association, 1 Batterymarch Park, Quincy, MA 02169-7471

6/8/2007

SAMPLE

Copyright National Fire Protection Association
Provided by IHS under license with NFPA
No reproduction or networking permitted without license from IHS
Not for Resale

NFPA Technical Committee Document Proposal Form

NOTE: All Proposals must be received by 5:00 pm EST/EDST on the published Proposal Closing Date.

For further information on the standards-making process, please contact the Codes and Standards Administration at 617-984-7249 or visit www.nfpa.org/codes.

For technical assistance, please call NFPA at 1-888-344-3555.

FOR OFFICE USE ONLY

Log #: _____

Date Rec'd: _____

Please indicate in which format you wish to receive your ROP/ROC ☐ electronic ☐ paper ☐ download
(Note: If choosing the download option, you must view the ROP/ROC from our website; no copy will be sent to you.)

Date _____ **Name** _____ **Tel. No.** _____

Company _____

Street Address _____ **City** _____ **State** _____ **Zip** _____

Please indicate organization represented (if any) _____

1. (a) NFPA Document Title _____ **NFPA No. & Year** _____

(**b) Section/Paragraph** _____

2. Proposal Recommends (check one): ☐ new text ☐ revised text ☐ deleted text

3. Proposal (include proposed new or revised wording, or identification of wording to be deleted): [Note: Proposed text should be in legislative format; i.e., use underscore to denote wording to be inserted (inserted wording) and strike-through to denote wording to be deleted (~~deleted wording~~).]

4. Statement of Problem and Substantiation for Proposal: (Note: State the problem that would be resolved by your recommendation; give the specific reason for your Proposal, including copies of tests, research papers, fire experience, etc. If more than 200 words, it may be abstracted for publication.)

5. Copyright Assignment

(a) ☐ I am the author of the text or other material (such as illustrations, graphs) proposed in this Proposal.

(b) ☐ Some or all of the text or other material proposed in this Proposal was not authored by me. Its source is as follows (please identify which material and provide complete information on its source)**:**

_____

I agree that any material that I author, either individually or with others, in connection with work performed by an NFPA Technical Committee shall be considered to be works made for hire for the NFPA. To the extent that I retain any rights in copyright as to such material, or as to any other material authored by me that I submit for the use of an NFPA Technical Committee in the drafting of an NFPA code, standard, or other NFPA document, I hereby grant and assign all and full rights in copyright to the NFPA. I further agree and acknowledge that I acquire no rights in any publication of the NFPA and that copyright and all rights in materials produced by NFPA Technical Committees are owned by the NFPA and that the NFPA may register copyright in its own name.

Signature (Required) _____

PLEASE USE SEPARATE FORM FOR EACH PROPOSAL • NFPA Fax: (617) 770-3500

Mail to: Secretary, Standards Council, National Fire Protection Association, 1 Batterymarch Park, Quincy, MA 02169-7471

6/8/2007

--`,,```,,,,````-`-`,,`,,`,`,,`---

Copyright National Fire Protection Association
Provided by IHS under license with NFPA
No reproduction or networking permitted without license from IHS

Not for Resale