NFPA 258

Recommended Practice for Determining Smoke Generation of Solid Materials

2001 Edition

NFPA, 1 Batterymarch Park, PO Box 9101, Quincy, MA 02269-9101
An International Codes and Standards Organization

NFPA License Agreement

This document is copyrighted by the National Fire Protection Association (NFPA), 1 Batterymarch Park, Quincy, MA 02269-9101 USA.
All rights reserved.

NFPA grants you a license as follows: The right to download an electronic file of this NFPA document for temporary storage on one computer for purposes of viewing and/or printing one copy of the NFPA document for individual use. Neither the electronic file nor the hard copy print may be reproduced in any way. In addition, the electronic file may not be distributed elsewhere over computer networks or otherwise. The hard copy print may only be used personally or distributed to other employees for their internal use within your organization.

Copyright National Fire Protection Association
Provided by IHS under license with NFPA
No reproduction or networking permitted without license from IHS

Not for Resale

Copyright ©
NFPA
One Batterymarch Park
Quincy, Massachusetts 02269

IMPORTANT NOTICE ABOUT THIS DOCUMENT

NFPA codes, standards, recommended practices, and guides, of which the document contained herein is one, are developed through a consensus standards development process approved by the American National Standards Institute. This process brings together volunteers representing varied viewpoints and interests to achieve consensus on fire and other safety issues. While the NFPA administers the process and establishes rules to promote fairness in the development of consensus, it does not independently test, evaluate, or verify the accuracy of any information or the soundness of any judgments contained in its codes and standards.

The NFPA disclaims liability for any personal injury, property or other damages of any nature whatsoever, whether special, indirect, consequential or compensatory, directly or indirectly resulting from the publication, use of, or reliance on this document. The NFPA also makes no guaranty or warranty as to the accuracy or completeness of any information published herein.

In issuing and making this document available, the NFPA is not undertaking to render professional or other services for or on behalf of any person or entity. Nor is the NFPA undertaking to perform any duty owed by any person or entity to someone else. Anyone using this document should rely on his or her own independent judgment or, as appropriate, seek the advice of a competent professional in determining the exercise of reasonable care in any given circumstances.

The NFPA has no power, nor does it undertake, to police or enforce compliance with the contents of this document. Nor does the NFPA list, certify, test or inspect products, designs, or installations for compliance with this document. Any certification or other statement of compliance with the requirements of this document shall not be attributable to the NFPA and is solely the responsibility of the certifier or maker of the statement.

See inside back cover for additional important notices and information.

NOTICES

All questions or other communications relating to this document and all requests for information on NFPA procedures governing its codes and standards development process, including information on the procedures for requesting Formal Interpretations, for proposing Tentative Interim Amendments, and for proposing revisions to NFPA documents during regular revision cycles, should be sent to NFPA headquarters, addressed to the attention of the Secretary, Standards Council, National Fire Protection Association, 1 Batterymarch Park, P.O. Box 9101, Quincy, MA 02269-9101.

Users of this document should be aware that this document may be amended from time to time through the issuance of Tentative Interim Amendments, and that an official NFPA document at any point in time consists of the current edition of the document together with any Tentative Interim Amendments then in effect. In order to determine whether this document is the current edition and whether it has been amended through the issuance of Tentative Interim Amendments, consult appropriate NFPA publications such as the *National Fire Codes*® Subscription Service, visit the NFPA website at www.nfpa.org, or contact the NFPA at the address listed above.

A statement, written or oral, that is not processed in accordance with Section 6 of the Regulations Governing Committee Projects shall not be considered the official position of NFPA or any of its Committees and shall not be considered to be, nor be relied upon as, a Formal Interpretation.

The NFPA does not take any position with respect to the validity of any patent rights asserted in connection with any items which are mentioned in or are the subject of this document, and the NFPA disclaims liability for the infringement of any patent resulting from the use of or reliance on this document. Users of this document are expressly advised that determination of the validity of any such patent rights, and the risk of infringement of such rights, is entirely their own responsibility.

Users of this document should consult applicable federal, state, and local laws and regulations. NFPA does not, by the publication of this document, intend to urge action that is not in compliance with applicable laws, and this document may not be construed as doing so.

8/00

--```,,,-`-`,,`,,`,`,,`---

Copyright National Fire Protection Association
Provided by IHS under license with NFPA
No reproduction or networking permitted without license from IHS

Not for Resale

Licensing Policy

This document is copyrighted by the National Fire Protection Association (NFPA). By making this document available for use and adoption by public authorities and others, the NFPA does not waive any rights in copyright to this document.

1. Adoption by Reference—Public authorities and others are urged to reference this document in laws, ordinances, regulations, administrative orders, or similar instruments. Any deletions, additions, and changes desired by the adopting authority must be noted separately. Those using this method are requested to notify the NFPA (Attention: Secretary, Standards Council) in writing of such use. The term "adoption by reference" means the citing of title and publishing information only.

2. Adoption by Transcription—A. Public authorities with lawmaking or rule-making powers only, upon written notice to the NFPA (Attention: Secretary, Standards Council), will be granted a royalty-free license to print and republish this document in whole or in part, with changes and additions, if any, noted separately, in laws, ordinances, regulations, administrative orders, or similar instruments having the force of law, provided that: (1) due notice of NFPA's copyright is contained in each law and in each copy thereof; and (2) that such printing and republication is limited to numbers sufficient to satisfy the jurisdiction's lawmaking or rule-making process. **B.** Once this NFPA Code or Standard has been adopted into law, all printings of this document by public authorities with lawmaking or rule-making powers or any other persons desiring to reproduce this document or its contents as adopted by the jurisdiction in whole or in part, in any form, upon written request to NFPA (Attention: Secretary, Standards Council), will be granted a nonexclusive license to print, republish, and vend this document in whole or in part, with changes and additions, if any, noted separately, provided that due notice of NFPA's copyright is contained in each copy. Such license shall be granted only upon agreement to pay NFPA a royalty. This royalty is required to provide funds for the research and development necessary to continue the work of NFPA and its volunteers in continually updating and revising NFPA standards. Under certain circumstances, public authorities with lawmaking or rule-making powers may apply for and may receive a special royalty where the public interest will be served thereby.

3. Scope of License Grant—The terms and conditions set forth above do not extend to the index of this document.

(For further explanation, see the Policy Concerning the Adoption, Printing, and Publication of NFPA Documents, which is available upon request from the NFPA.)

Copyright National Fire Protection Association
Provided by IHS under license with NFPA
No reproduction or networking permitted without license from IHS
Not for Resale

Copyright © 2001 NFPA, All Rights Reserved

NFPA 258

Recommended Practice for

Determining Smoke Generation of Solid Materials

2001 Edition

This edition of NFPA 258, *Recommended Practice for Determining Smoke Generation of Solid Materials*, was prepared by the Technical Committee on Fire Tests and acted on by the National Fire Protection Association, Inc., at its November Meeting held November 12–15, 2000, in Orlando, FL. It was issued by the Standards Council on January 13, 2001, with an effective date of February 9, 2001, and supersedes all previous editions.

This edition of NFPA 258 was approved as an American National Standard on February 9, 2001.

Origin and Development of NFPA 258

The smoke problem that develops during unwanted fires has been recognized for years. There is continuing recognition of the major role of combustion products in the majority of fire fatalities. Fire fighters are faced with the smoke problem daily in their work.

The many ways in which fire gases influence a hazard to life have, to date, precluded their exact technical assessment. A test method, such as the one described here, has obvious merit as a measurement tool for assisting in research, development, and production quality control of materials and products. Use of this test method for rough analysis of the smoke production during an actual fire is informative in demonstrating the magnitude of the smoke problem.

The smoke density chamber provides a means for characterizing smoke production with an accuracy far in excess of any application requirements. It also provides a means for reporting the rate of smoke production and the time at which specific smoke levels are reached under the test conditions applied.

The concept of specific optical density, while outdated in terms of photometric practice, was first introduced for measuring smoke as part of the smoke density chamber test method. It is based on Bouguer's law and permits reporting smoke developed in terms that recognize the area of the specimen involved, the volume of the box, and the optical path length of the photometer. The test method was developed at the National Bureau of Standards and first described publicly in 1967. Since then, there have been numerous publications reporting on its application and on studies of the correlation of results of interlaboratory tests through its use.

NFPA 258 was tentatively adopted by the NFPA as a standard in 1974. A revised edition was adopted as a standard in 1976 and reconfirmed at the NFPA 1981 and 1986 Fall Meetings. The 1989 edition reflected a minor revision to the scope statements of the standard.

The 1994 edition was a reconfirmation of the 1989 edition with minor editorial changes and updating of the references within the document.

The 1997 edition was also a reconfirmation of the earlier edition. The committee recognized that this standard is used by many in industries and governmental agencies for determination of smoke generation from specific solid materials. The original intent during the development of this standard was that the standard was to be used for a research and development tool. The committee developed a proposed standard NFPA 270, *Determination of Specific Official Density of Smoke*, which can be used for regulatory purposes. This proposed standard will replace the current edition of NFPA 258.

As noted previously, the 2001 edition of NFPA 258 has been revised as a recommended practice because NFPA 270 is now available as a standard. NFPA 258 will be maintained for a time since it is recognized that there are some government agencies, organizations, and manufacturers that still use it for product classification and development.

Copyright National Fire Protection Association
Provided by IHS under license with NFPA
No reproduction or networking permitted without license from IHS
Not for Resale

Technical Committee on Fire Tests

Jesse J. Beitel, *Chair*
Hughes Assoc., Inc., MD [SE]

Patty K. Adair, American Textile Mfrs. Inst., DC [M]
April L. Berkol, Starwood Hotels and Resorts, Inc., NY [U]
Rep. American Hotel & Motel Assn.
John A. Blair, The DuPont Co., DE [M]
Rep. Society of the Plastics Industry Inc.
William E. Fitch, Omega Point Laboratories Inc., TX [RT]
Thomas W. Fritz, Armstrong World Industries Inc., PA [M]
James R. Griffith, Southwest Research Institute, TX [RT]
Gordon E. Hartzel, Hartzell Consulting, Inc., TX [SE]
Marcelo M. Hirschler, GBH Int'l, CA [SE]
Alfred J. Hogan, Reedy Creek Improvement District, FL [E]
Rep. International Fire Marshals Assn.
William E. Koffel, Jr., Koffel Assoc., Inc., MD [SE]
James R. Lawson, U.S. Nat'l Inst. of Standards and Technology, MD [RT]
Rodney A. McPhee, Canadian Wood Council, Canada [M]
William S. Metes, Underwriters Laboratories Inc., IL [RT]
James A. Milke, University of Maryland, MD [SE]
John Roberts, Underwriters' Laboratories of Canada, Canada [RT]
Nigel R. Stamp, Intertek Testing Services NA Inc., WI [RT]
Phil M. Stricklen, American Fibers and Yarns Co., GA [M]
Kuma Sumathipala, American Forest & Paper Assn., DC [M]
T. Hugh Talley, Hugh Talley Co., TN [M]
Rep. Upholstered Furniture Action Council
David K. Tanaka, FM Global, MA [I]
Richard P. Thornberry, The Code Consortium, Inc., CA [SE]
William A. Webb, Performance Technology Consulting, Ltd., IL [SE]
Robert A. Wessel, Gypsum Assn., DC [M]
Robert J. Wills, American Iron & Steel Inst., AL [M]
Peter J. Gore Willse, Industrial Risk Insurers, CT [I]

Alternates

Kenneth G. Adams, Society of the Plastics Industry, DC [M]
(Alt. to J. A. Blair)
Robert G. Bill, Jr., FM Global, MA [I]
(Alt. to D. K. Tanaka)
Delbert F. Boring, Jr., American Iron & Steel Inst., OH [M]
(Alt. to R. J. Wills)
Tony Crimi, Underwriters' Laboratories of Canada, Canada [RT]
(Alt. to J. Roberts)
Philip J. DiNenno, Hughes Assoc., Inc., MD [SE]
(Alt. to J. J. Beitel)
Sam W. Francis, American Forest & Paper Assn., PA [M]
(Alt. to K. Sumathipala)
Richard G. Gann, U.S. Nat'l Inst. of Standards and Technology, MD [RT]
(Alt. to J. R. Lawson)
Marc L. Janssens, Southwest Research Institute, TX [RT]
(Alt. to J. R. Griffith)
James K. Lathrop, Koffel Assoc., Inc., CT [SE]
(Alt. to W. E. Koffel)
John W. Michener, Milliken Research Corp., SC [M]
(Alt. to P. K. Adair)
Frederick W. Mowrer, University of Maryland, MD [SE]
(Alt. to J. A. Milke)
William A. Thornberg, Industrial Risk Insurers, CT [I]
(Alt. to P. J. G. Willse)
James J. Urban, Underwriters Laboratories Inc., IL [RT]
(Alt. to W. S. Metes)
Joe Ziolkowski, American Furniture Mfrs. Assn., NC [M]
(Alt. to T. H. Talley)

Nonvoting

Robert H. Barker, American Fiber Mfrs. Assn., DC [M]
(Alt. to T. L. Jilg)
Tod L. Jilg, Hoechst Celanese Corp., NC [M]
Rohit Khanna, U.S. Consumer Product Safety Commission, MD [C]
James C. Norris, Couance Laboratories Ltd., England [SE]
Herman H. Spaeth, Novato, CA
(Member Emeritus)

Walter P. Sterling, NFPA Staff Liaison

This list represents the membership at the time the Committee was balloted on the final text of this edition. Since that time, changes in the membership may have occurred. A key to classifications is found at the back of the document.

NOTE: Membership on a committee shall not in and of itself constitute an endorsement of the Association or any document developed by the committee on which the member serves.

Committee Scope: This Committee shall have primary responsibility for documents on fire testing procedures, for reviewing existing fire test standards and recommending appropriate action to NFPA, for recommending the application of and advising on the interpretation of acceptable test standards for fire problems of concern to NFPA technical committees and members, and for acting in a liaison capacity between NFPA and the committees of other organizations writing fire test standards. This Committee does not cover fire tests that are used to evaluate extinguishing agents, devices, or systems.

Copyright National Fire Protection Association
Provided by IHS under license with NFPA
No reproduction or networking permitted without license from IHS
Not for Resale

Contents

Chapter 1 General **258–** 4
1.1 Scope **258–** 4
1.2 Significance **258–** 4
1.3 Summary of Method **258–** 4

Chapter 2 Test Apparatus **258–** 4
2.1 General **258–** 4
2.2 Test Chamber **258–** 5
2.3 Radiant Heat Furnace **258–** 5
2.4 Specimen Holder **258–** 6
2.5 Framework for Support of the Furnace and Specimen Holder **258–** 6
2.6 Photometric System **258–** 6
2.7 Radiometer **258–** 8
2.8 Thermocouples for Determining Chamber Wall Temperature **258–** 8
2.9 Portable Recorder or Readout Meter **258–** 8
2.10 Manometer for Chamber Pressure Measurements **258–** 8
2.11 Multiple-Flamelet Burner with Premixed Air–Propane Fuel **258–** 8

Chapter 3 Test Specimens **258–** 8
3.1 Specimen Description **258–** 8
3.2 Number of Test Specimens **258–** 8
3.3 Specimen Conditioning **258–** 8
3.4 Specimen Mounting **258–** 9

Chapter 4 Test Procedure **258–** 9
4.1 Test Room **258–** 9
4.2 Equipment Cleaning **258–** 9
4.3 Warm-up of Furnace **258–** 9
4.4 Burner Positioning **258–** 9
4.5 Procedures **258–** 9

Chapter 5 Calculations **258–**10
5.1 Specific Optical Density **258–**10
5.2 Maximum Specific Optical Density **258–**10
5.3 Light Transmittance **258–**10

Chapter 6 Report **258–**10
6.1 Documentation **258–**10
6.2 Test Termination **258–**11

Chapter 7 Referenced Publications **258–**11

Appendix A Explanatory Material **258–**11

Appendix B Apparatus Construction and Calibration **258–**12

Appendix C Reporting Results **258–**13

Appendix D Commentary **258–**15

Appendix E Referenced Publications **258–**18

Appendix F Selected Papers for Further Study **258–**20

Index **258–**22

Copyright National Fire Protection Association
Provided by IHS under license with NFPA
No reproduction or networking permitted without license from IHS
Not for Resale

NFPA 258

Recommended Practice for

Determining Smoke Generation of Solid Materials

2001 Edition

NOTICE: An asterisk (*) following the number or letter designating a paragraph indicates that explanatory material on the paragraph can be found in Appendix A.

Information on referenced publications can be found in Chapter 7 and Appendix E.

Chapter 1 General

1.1 Scope.

1.1.1* This test method provides a procedure for assessing the smoke obscuration caused by the burning of solid materials and assemblies in thicknesses up to and including 1 in. (25.4 mm) where subjected to specific test conditions in a closed chamber. The test is used as a research and development tool only and should not be used as a basis for determining ratings for building codes or other regulatory purposes.

1.1.2 Measurement is made of the attenuation of a light beam by the suspended solid or liquid particles — that is, smoke — that accumulate within a closed chamber. The smoke is due to either nonflaming, pyrolytic decomposition or flaming combustion of a relatively small sample of material. The radiant heat source is an electric furnace. NFPA 270, *Standard Test Method for Measurement of Smoke Obscuration Using a Conical Radiant Source in a Single Closed Chamber*, has subsequently been developed using an improved-design radiant heat source within the same closed chamber.

1.1.3* Test results are expressed in terms of specific optical density, which is a dimensionless property derived from the measured light transmission and geometric measurements of the chamber and the specimen.

1.1.4 This test is intended to measure and describe the properties of materials, products, or assemblies in response to heat and flame under controlled conditions. It is not intended to describe or appraise the fire hazard or fire risk of materials, products, or assemblies under actual fire conditions.

1.2 Significance.

1.2.1* This test method provides a means for comparing the specific optical density of the smoke that is generated by materials and assemblies in the form and thickness tested and under the specified exposure conditions.

1.2.2 Values that are determined by this test are specific to the specimen or assembly material in the form and thickness that are tested, and they should not be considered inherent, fundamental properties of a given material.

1.2.3 The values that are stated in U.S. customary units should be regarded as the standard. The metric equivalents of U.S. customary units given herein are approximate.

1.2.4 No basis is provided for predicting the density of smoke that can be generated by materials upon exposure to heat and flame under other fire conditions or in other atmospheres.

1.2.5 Values that are determined by this test are specific with respect to the effect of attenuation of light transmission within the chamber of the smoke that is generated by the material in the form, thickness, and quantity tested where subjected to the specified energy sources. These values by themselves do not provide a basis for predicting material performance in actual fires.

1.3 Summary of Method.

1.3.1 This method for measuring the smoke that is generated by materials employs an electrically heated, radiant energy source mounted within an insulated ceramic tube. This radiant energy source is positioned to produce an irradiance level of 2.2 Btu/sec · ft^2 (2.5 W/cm^2) averaged over the central $1^1/_2$-in. (38.1-mm) diameter area of a vertically mounted specimen facing the radiant heater. The nominal 3-in. × 3-in. (76.2-mm × 76.2-mm) specimen should be mounted within a holder that exposes an area measuring $2^9/_{16}$ in. × $2^9/_{16}$ in. (65.1 mm × 65.1 mm). The holder can accommodate specimens that are up to 1 in. (25.4 mm) thick. This exposure provides the nonflaming condition of the test.

1.3.2 For the flaming condition, a six-tube burner should be used to apply a row of equidistant, premixed — that is, air–propane — flamelets across the lower edge of the exposed specimen area and into the specimen holder trough. This application of flame, in addition to the specified irradiance level from the heating element, should constitute the flaming combustion exposure.

1.3.3 The test specimens should be exposed to the flaming and nonflaming conditions within a closed 18-ft^3 (0.51-m^3) chamber. A photometric system with a 36-in. (914-mm) vertical light path measures the continuous decrease in light transmission as smoke accumulates. Exposure should be continued for 20 minutes or until minimum light transmission is reached, whichever occurs first.

1.3.4 Calibration procedures for the test equipment, such as those described in Section B.2, should be followed.

1.3.5* The light transmittance measurements should be used to express the smoke that is generated by the test materials, in terms of the specific optical density during the time necessary to reach the maximum value.

Chapter 2 Test Apparatus

2.1* General. The apparatus should be essentially as shown in Figures 2.1(a) and (b). It should include the components given in Sections 2.2 through 2.11.

Copyright National Fire Protection Association
Provided by IHS under license with NFPA
No reproduction or networking permitted without license from IHS
Not for Resale

FIGURE 2.1(a) Smoke density chamber.

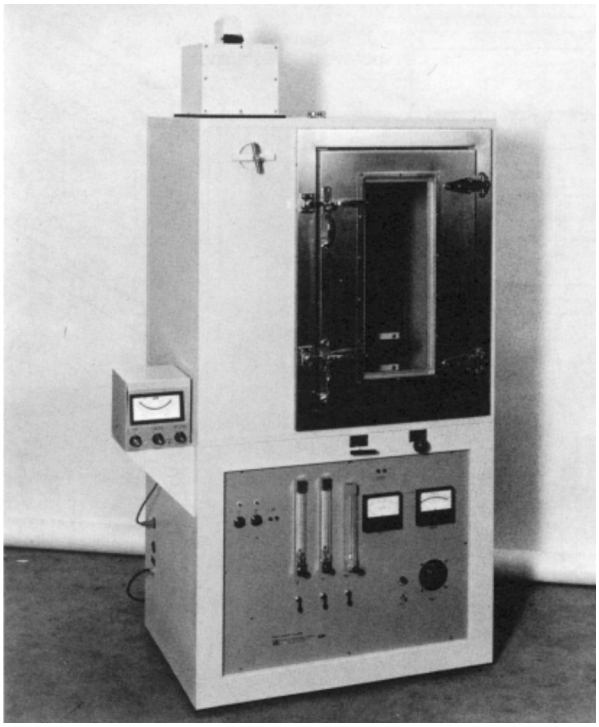

FIGURE 2.1(b) Smoke density chamber assembly.

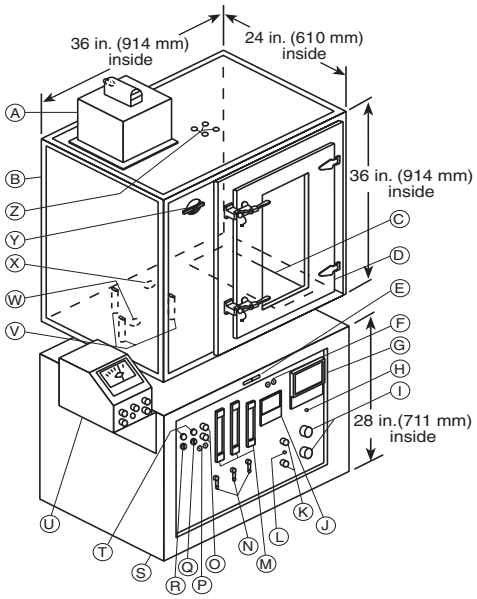

A — Phototube enclosure
B — Chamber
C — Blowout panel
D — Hinged door with window
E — Exhaust vent control
F — Radiometer output jack
G — Temperature (wall) indicator
H — Temperature indicator switch
I — Autotransformers
J — Voltmeter (furnace)
K — Fuse holders
L — Furnace heater switch
M — Gas and air flowmeters
N — Gas and air shutoff valves
O — Light intensity controls
P — Light voltage measuring jack
Q — Light source switch
R — Line switch
S — Support frame
T — Indicating lamps
U — Photometer readout
V — Rods
W — Glass window
X — Exhaust vent
Y — Inlet vent
Z — Access ports

2.2 Test Chamber.

2.2.1 As shown in Figure 2.1(b), the test chamber should be fabricated from laminated panels to provide inside dimensions of 36 in. × 24 in. × 36. in. ± $^1/_8$ in. (914 mm × 610 mm × 914 mm ± 3 mm) for width, depth, and height, respectively.

2.2.2* The interior surfaces should consist of porcelain-enameled metal or equivalent coated metal that is resistant to chemical attack and corrosion and suitable for periodic cleaning.

2.2.3 Sealed openings should be provided to accommodate a vertical photometer, power and signal connectors, air and gas supply tubes, exhaust blower, inlet and exhaust vents, pressure and gas sampling taps, a pressure relief valve, a rod for remote positioning of the specimen holder, an aluminum foil [0.0010 in. (approximately 0.025 mm) or less in thickness] safety-blowout panel that is at least 125 in.^{2} (80,650 mm^2) in area, and a hinged, front-mounted door with an observation port or window.

2.2.4 All openings should be located on the floor of the chamber.

Exception: The gas sampling taps, the positioning rod, and an inlet vent.

2.2.5 Where all openings are closed, the chamber should be capable of developing and maintaining positive pressure during test periods in accordance with Section 2.10.

2.3 Radiant Heat Furnace.

2.3.1 An electric furnace, as shown in Figure 2.3, with a 3-in. (76.2-mm) diameter opening should be used to provide a constant irradiance on the specimen surface.

FIGURE 2.3 Electric furnace section.

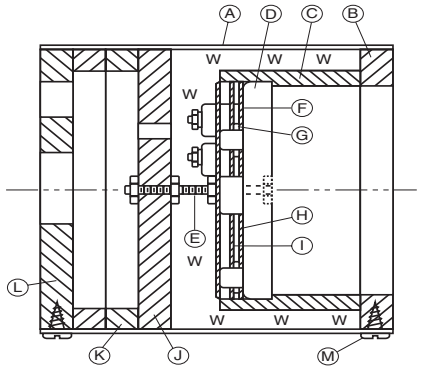

A — Stainless steel tube
B — Asbestos board
C — Ceramic tube
D — Heating element, 525 W
E — Stainless steel screw
F — Asbestos paper gasket
G — Stainless steel spacing washers (3)
H — Stainless steel reflector
I — Stainless steel reflector
J — Asbestos board
K — Asbestos board rings
L — Asbestos board cover
M — Sheet metal screws
W — Pyrex glass wool

2.3.2 The furnace should be located along the centerline, equidistant between the front and back of the chamber, with the opening facing toward and approximately 12 in. (305 mm) from the right wall.

2.3.3 The centerline of the furnace should be approximately 7 $^3/_4$ in. (197 mm) above the chamber floor.

2.3.4 The furnace control system should maintain the required irradiance level, under steady-state conditions with the chamber door closed, to within ± 0.04 Btu/sec · ft^2 (± 0.05 W/cm^2) for 20 minutes.

Copyright National Fire Protection Association
Provided by IHS under license with NFPA
No reproduction or networking permitted without license from IHS
Not for Resale

2.3.5* The control system should consist of an autotransformer or an alternate control device, and a voltmeter or other means for monitoring the electrical output.

2.4 Specimen Holder. Specimen holders should conform in shape and dimension to that shown in Figure 2.4, and they should be fabricated to expose a specimen area $2^9/_{16}$ in. × $2^9/_{16}$ in. (65.1 mm × 65.1 mm). The spring and rods for retaining the specimen within the holders should be as shown in Figure 2.4.

2.5 Framework for Support of the Furnace and Specimen Holder. The framework for support of the furnace and specimen holder should be constructed in accordance with Figure 2.5.

2.6 Photometric System.

2.6.1 The photometric system should consist of a light source and photodetector. The system should be oriented vertically to reduce variations in measurement brought about by stratification of the smoke generated by the test materials.

2.6.2 The system should be as shown in Figures 2.6.2(a) and 2.6.2(b) and should include the following.

(a) The *light source* should be an incandescent lamp that is operated at a fixed voltage in a circuit that is powered by a voltage-regulating transformer. The light source should be mounted in a sealed and light-tight box that is located below the chamber. This box should contain the necessary optics to provide a collimated light to pass vertically through the chamber.

(b) The *photodetector* should be a photomultiplier tube with an S-4 spectral sensitivity response and a dark current less than 10 A. A sealed box that is located directly opposite of the light source should be provided to house the photodetector and the focusing optics. A glass window should be used to isolate the photodetector and its optics from the interior of the chamber.

FIGURE 2.4 Details of specimen holder and pilot burner.

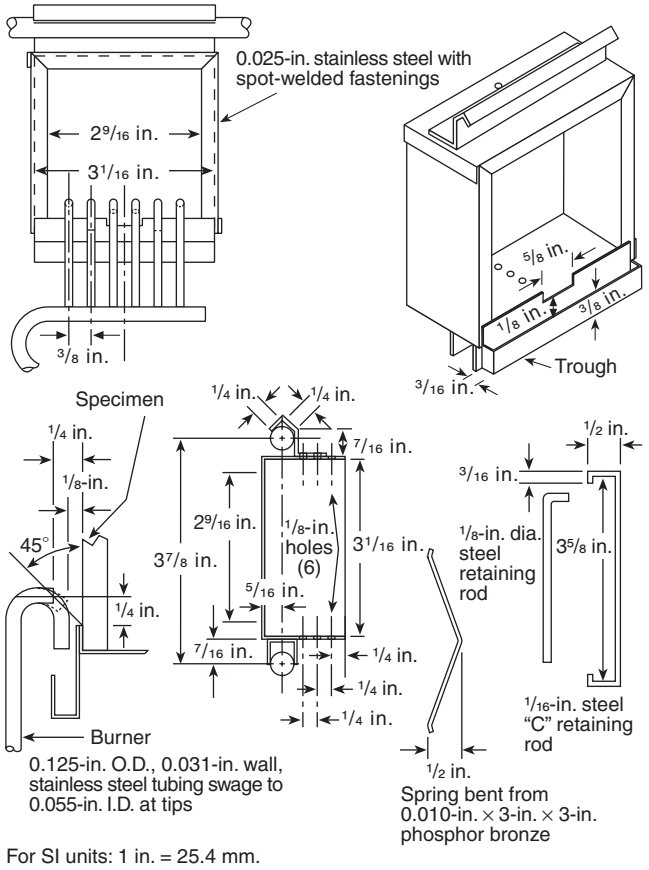

For SI units: 1 in. = 25.4 mm.

FIGURE 2.5 Furnace support.

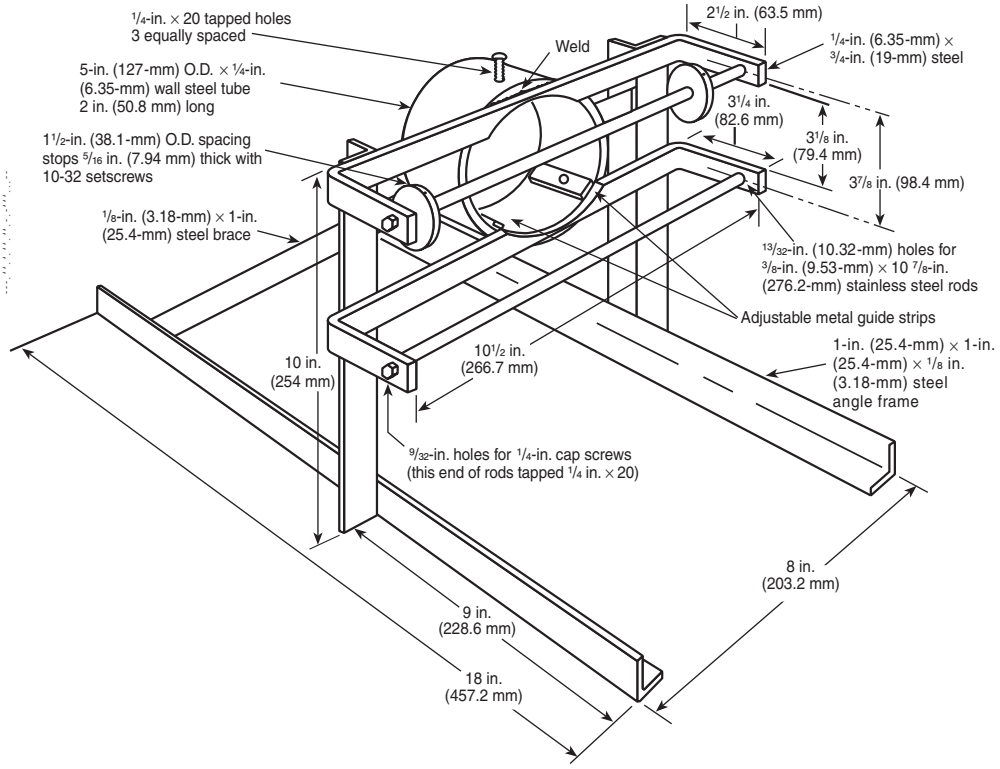

Copyright National Fire Protection Association
Provided by IHS under license with NFPA
No reproduction or networking permitted without license from IHS
Not for Resale

FIGURE 2.6.2(a) Photometer details.

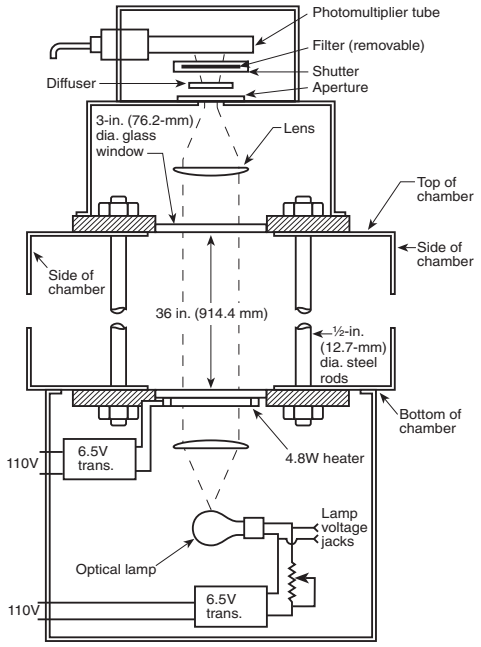

FIGURE 2.6.2(b) Photometer location — partial plan view.

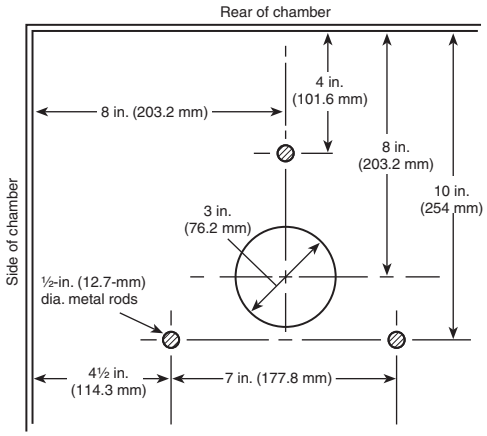

FIGURE 2.7.2 Radiometer detail.

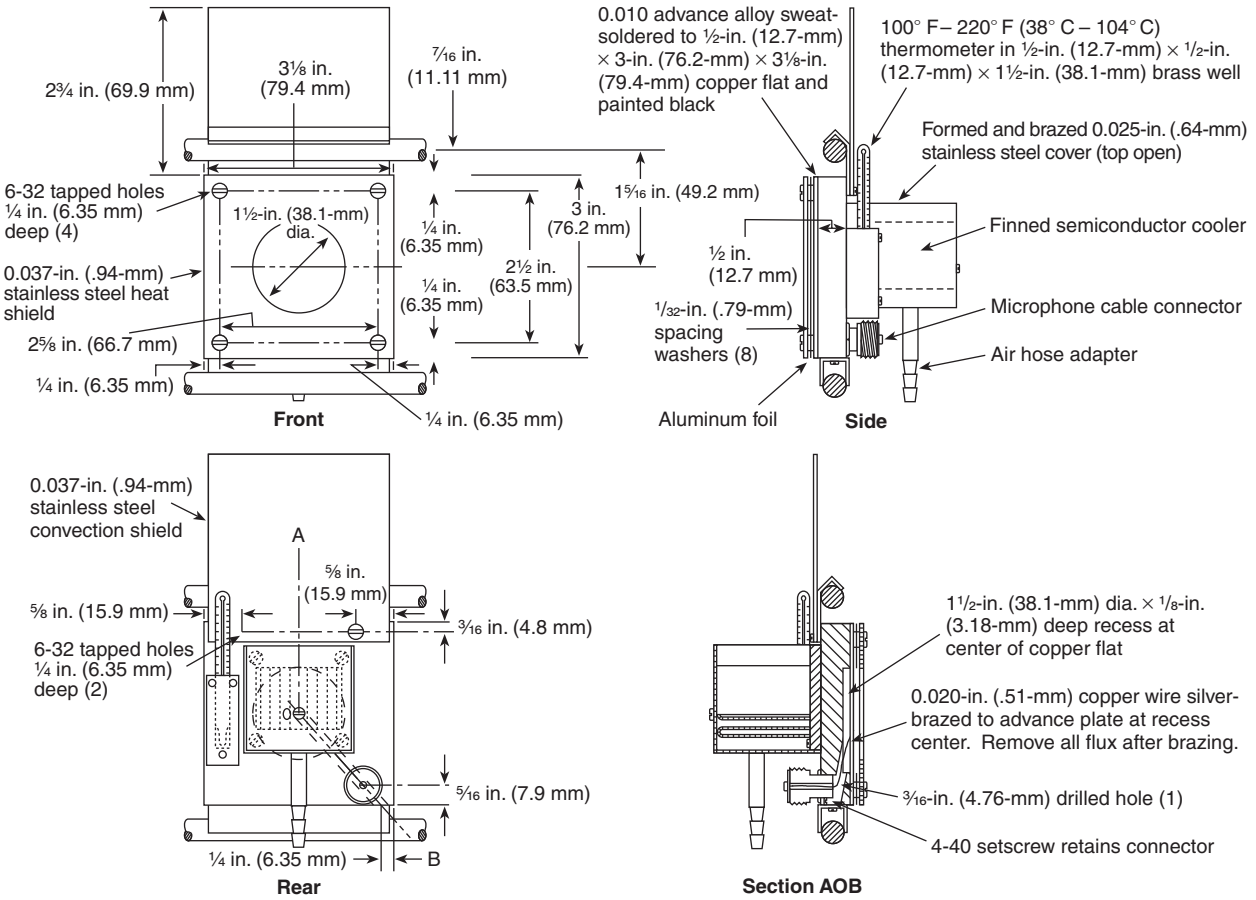

Copyright National Fire Protection Association
Provided by IHS under license with NFPA
No reproduction or networking permitted without license from IHS
Not for Resale

2.7 Radiometer.

2.7.1* The radiometer for standardizing the output of the radiant heat furnace should be of the circular foil type.

2.7.2 The construction of the radiometer should be as shown in Figure 2.7.2.

2.7.3 The radiometer should have a stainless steel reflective heat shield with a $1^1/_2$-in. (38.1-mm) aperture on the front and a finned cooler, which is supplied with compressed air, mounted on the rear to maintain a constant body temperature of 200°F ± 5°F (93°C ± 3°C).

2.8 Thermocouples for Determining Chamber Wall Temperature. A thermocouple should be provided for determining the chamber wall temperature prior to testing.

2.9 Portable Recorder or Readout Meter.

2.9.1 The outputs of the radiometer and the thermocouples should be monitored by a suitable recorder or readout meter.

2.9.2 The photodetector output should be recorded or monitored with a potentiometer or other suitable instrument that is capable of measurement over a range of five decades or more. *(See B.1.4.)*

2.10 Manometer for Chamber Pressure Measurements.

2.10.1 A simple water manometer with a range of up to 6 in. (152 mm) of water should be provided to monitor chamber pressure and leakage. *(See B.2.3.)*

2.10.2 The pressure measurement point should be through a gas-sampling hole at the top of the chamber.

2.10.3 A simple water column or relief valve should be provided to permit control of chamber pressure. *(See B.1.8.)*

2.11 Multiple-Flamelet Burner with Premixed Air–Propane Fuel.

2.11.1 For a flaming exposure test, a six-tube burner, with construction details as shown in Figure 2.4, should be used.

2.11.2 The burner should be centered in front of and parallel to the specimen holder.

2.11.3 The tips of the two horizontal tubes should be centered $^1/_4$ in. ± $^1/_{16}$ in. (6.4 mm ± 1.6 mm) above the holder edge and $^1/_4$ in. ± $^1/_{16}$ in. (6.4 mm ± 1.6 mm) away from the specimen surface.

2.11.4 Provisions should be made to rotate or move the burner out of position during nonflaming exposures.

2.11.5 A premixed air–propane (95 percent purity or better) test gas should be used.

2.11.6 The air–propane test gas should be metered by calibrated flow meters and needle valves at 500 cm^3/min for air and at 50 cm^3/min for propane.

Chapter 3 Test Specimens

3.1 Specimen Description.

3.1.1 Size.

3.1.1.1 The test specimens should be 3 in. × 3 in. ± 0.03 in. (76.2 mm × 76.2 mm ± 0.8 mm) and should have an intended installation thickness of up to and including 1 in. (25.4 mm).

3.1.1.2 Specimens that are provided in thicknesses in excess of 1 in. (25.4 mm) should be sliced to 1 in. (25.4 mm) thickness, and the original, uncut surface should be tested.

3.1.1.3 Multilayer materials that are more than 1 in. (25.4 mm) thick and that consist of a core material with surface facings of different materials should be sliced to 1 in. (25.4 mm) thickness, and each original, uncut surface should be tested separately if recommended under 3.1.3.

3.1.2 Specimen Orientation.

3.1.2.1 If visual inspection of the specimen indicates a pronounced grain pattern, process-induced surface orientation, or other nonisotropic property, the specimen should be tested in two or more orientations.

3.1.2.2 The highest smoke density value and the test orientation should be stated.

3.1.3 Specimen Assembly.

3.1.3.1* The specimen should be representative of the material or composite and should be prepared in accordance with recommended application procedures.

Exception: Flat sections of the same thickness and composition can be supplied and tested in place of curved, molded, or specialty parts.

3.1.3.2 Where an adhesive is intended for field application of a finish material to a substrate, the prescribed type of adhesive and its spreading rate should be noted and used for the test.

3.1.3.3* Where supplementary tests are necessitated by delamination, cracking, peeling, or other separations of the specimen that affect smoke generation, the manner of performing such supplementary tests and the test results should be included in the report with the conventional test.

3.1.3.4 For comparative tests of finish materials without a normal substrate or core and for screening purposes only, the following procedures should be employed.

(a) Rigid or semirigid sheet materials should be tested according to the standard procedure, regardless of thickness.

(b) Using recommended or practical application techniques and coverage rates, liquid films — for example, paints and adhesives — that are intended for application to combustible base materials should be applied to the smooth face of $^1/_4$-in. (6.4-mm) thick tempered hardboard with a nominal density of 50 lb/ft^3 to 60 lb/ft^3 (0.81 g/cm^3 to 0.97 g/cm^3). Tests also should be conducted on the hardboard substrate alone, and these values should be recorded as supplemental to the measured values for the composite specimen.

(c) Using recommended or practical application techniques and coverage rates, liquid films — for example, paints and adhesives — that are intended for application to noncombustible substrate materials should be applied to the smooth face of $^1/_4$-in. (6.4-mm) thick asbestos-cement board with a nominal density of 120 lb/ft^3 (1.95 g/cm^3).

3.2 Number of Test Specimens. Three tests under flaming exposure and three tests under nonflaming exposure should be conducted on each material (i.e., a total of six specimens) in accordance with the conditions of this recommended practice.

3.3 Specimen Conditioning. Specimens should be predried for 24 hours at 140°F ± 5°F (60°C ± 3°C) and then conditioned to equilibrium — that is, constant weight, with an ambient

Copyright National Fire Protection Association
Provided by IHS under license with NFPA
No reproduction or networking permitted without license from IHS
Not for Resale

temperature of 73°F ± 5°F (23°C ± 3°C) and a relative humidity of 50 percent ± 5 percent.

3.4 Specimen Mounting.

3.4.1 All specimens should be covered across the back, along the edges, and over the front-surface periphery with a single sheet of aluminum foil 0.0010 in. to 0.0016 in. (0.025 mm to 0.040 mm) thick.

3.4.2 Care should be taken not to puncture the foil or to introduce unnecessary wrinkles during the wrapping operation.

3.4.3 Foil should be folded in a way that minimizes loss of melted material at the bottom of the holder.

3.4.4* Excess foil along the front edges should be trimmed off after mounting. A flap of foil should be cut and bent forward at the spout to permit flow from melting specimens.

3.4.5 All specimens should be backed with a sheet of asbestos millboard. *(See Section 2.4.)*

3.4.6 The specimen and its backing should be secured with a spring and retaining rod. A modified, C-shape retaining rod should be used with specimens that are $^5/_8$ in. to 1 in. (15.9 mm to 25.4 mm) thick.

3.4.7 Flexible specimens should not be compressed below their normal thickness.

3.4.8 The intent of this test method should be to maintain the prescribed exposure conditions on the specimen for the test duration. If during either the flaming or the nonflaming exposure an excess of melted material overflows the trough, the specimen area should be reduced. For example, if the area is reduced to 1 $^1/_2$ in. wide × 3 in. high (38.1 mm wide × 76.2 mm high) and is centrally located, the appropriate area should be used in calculating D_s. *(See Section 5.1.)*

Chapter 4 Test Procedure

4.1 Test Room. All tests should be conducted in a room or enclosed space having an ambient temperature of 73°F ± 5°F (23°C ± 3°C) and a relative humidity of 50 percent ± 20 percent at the time of test. Precautions should be taken to provide a means for removing potentially hazardous gases from the area of operation.

4.2 Equipment Cleaning.

4.2.1* The chamber walls should be cleaned whenever periodic visual inspection indicates a need.

4.2.2* The exposed surfaces of the glass windows that separate the photodetector and the light source housing from the interior of the chamber should be cleaned before each test.

4.3 Warm-up of Furnace.

4.3.1 During the warm-up period all electric systems — for example, furnace, light source, and photometer readout — should be on; the exhaust vent and chamber door should be closed; and the inlet vent should be open.

4.3.2* When the temperature on the center surface of the back wall reaches a steady-state value in the range of 95°F ± 4°F (35°C ± 2°C), the chamber should be ready for furnace calibration or testing.

4.3.3* According to test experience, the furnace output irradiance should be calibrated, without the burner in place, at periodic intervals.

4.3.4 A "blank" specimen holder, with the asbestos millboard exposed, should be directly in front of the furnace.

Exception: Where displaced to the side by the specimen holder during a test or by the radiometer during calibration.

The specimen holder should be returned immediately to the above position when testing or calibration is completed.

4.3.5 During calibration, the radiometer should be placed on the horizontal rods of the furnace support framework and accurately positioned in front of the furnace opening by sliding and displacing the "blank" specimen holder against the prepositioned stop. The furnace support framework, stop, and "blank" specimen holder should provide for the horizontal and vertical centering within $^1/_{16}$ in. (1.6 mm) of the furnace opening of the radiometer during calibration, and of the loaded specimen holder during testing.

4.3.6 With the chamber door closed and the inlet vent opened, the compressed air supply to the radiometer cooler should be adjusted to maintain its body temperature at 200°F ± 5°F (93°C ± 3°C).

4.3.7 The autotransformer setting should be adjusted to obtain the radiometer's calibrated millivolt output, which corresponds to a steady state irradiance of 2.2 Btu/sec · ft^2 ± 0.04 Btu/sec · ft^2 (2.5 W/cm^2 ± 0.05 W/cm^2) that is averaged over the central 1$^1/_2$-in. (38.1-mm) diameter area.

4.3.8 The recorder or meter, which is described in Section 2.9, should be used to monitor the radiometer output. After the prescribed irradiance level has reached steady state, the radiometer should be removed from the chamber and replaced with the "blank" specimen holder.

4.3.9 After the system has reached steady-state conditions, the meter or recorder zero, or both, should be adjusted.

4.3.10 The amplifier sensitivity should be adjusted to obtain a full-scale reading — that is, 100 percent transmittance — of the photodetector on the recorder or readout meter.

4.3.11 The "dark current" — that is, zero percent transmittance — on the maximum sensitivity range of the readout meter should be determined by blocking the light, and the "dark current" reading should be adjusted to zero.

4.4 Burner Positioning. For nonflaming exposures the multiple-flamelet burner should be removed. For flaming exposures the burner should be positioned across the lower edge of the specimen as described in Section 2.11. The burner distance, relative to the "blank" specimen, should be checked before fuel adjustment and ignition.

4.5 Procedures. Before the test specimen is positioned, the chamber should be flushed for approximately 2 minutes with the door and the exhaust and inlet vents open, and the starting temperature of the chamber should be verified according to the procedure described in 4.3.1 and 4.3.2.

4.5.1 The exhaust vent and blower should then be closed.

4.5.2 The loaded specimen holder should be placed on the bar support and should be pushed into position in front of the furnace, with the burner in position for flaming exposure, by displacing the "blank" holder.

Copyright National Fire Protection Association
Provided by IHS under license with NFPA
No reproduction or networking permitted without license from IHS
Not for Resale

4.5.3 The chamber door should be closed quickly, and the timer or the recorder chart drive, or both, should be started simultaneously. The inlet vent should be closed completely only when the photometer indicates smoke.

4.5.4 Light transmittance and the corresponding time should be recorded either as a continuous plot with a multirange recorder or at sufficient time intervals with a multirange meter readout. The necessary full-scale range changes in decade steps should be observed and noted.

4.5.5 The increase in chamber pressure should be observed with the manometer, which is described in Section 2.10. A regulator *(see B.1.8)* should be used to maintain the pressure in the range of 4 in. ± 2 in. (100 mm ± 50 mm) of water during most of the test. If negative pressure develops after intense specimen flaming, the inlet vent should be opened slightly to equalize the pressure. As a result of pressure rise, the fuel and air valves should be adjusted during the flaming test to maintain a constant flow rate.

4.5.6 Any observations that are pertinent to the burning and smoke-generating properties of the material under testing should be recorded in accordance with Chapter 6.

4.5.7 The test should continue for 20 minutes or until a minimum light transmittance value is reached, whichever occurs first. If the minimum light transmittance does not occur within the 20-minute exposure period, this should be noted in reporting the results.

4.5.8 If transmittance falls below 0.01 percent, the chamber window should be covered with an opaque screen to avoid possible light-scattering effects from room light. Also, any supplementary optical filter in the photometer system should be removed or displaced to extend the measuring range. If extraneous light can reflect into the photometer during removal of the filter, the high voltage should be turned off or the scale should be adjusted to minimize sensitivity. The filter should be replaced before the smoke is exhausted from the chamber.

4.5.9* The burner on flaming exposures should be extinguished, and exhausting of the chamber should be initiated, within 1 minute after minimum transmittance is reached. The specimen should be displaced from the front of the furnace by pushing the "blank" specimen holder with the positioning rod. Exhausting should continue with the inlet vent open until maximum transmittance is reached. This transmittance value should be recorded as the T_c, "the clear beam" reading, which should be used to correct for deposits on the photometer windows.

Chapter 5 Calculations

5.1 Specific Optical Density. Specific optical density, D_s, should be calculated as follows:

$$D_s = \frac{V}{AL}\left[\log_{10}\left(\frac{100}{T}\right)\right] = G\left[\log_{10}\left(\frac{100}{T}\right)\right]$$

where:

T = the percentage of light transmittance through smoke generated by a specimen

A = exposed area of specimen

V = volume of closed chamber

L = light path of transmittance

G = geometrical factor associated with the dimensions of the chamber and the specimen

Corrections for the volume of the furnace assembly and for the volume included in the door recess generally are less than 1 percent and can be disregarded.

Where it is necessary to remove the neutral density filter to measure low levels of light transmittance *(see B.1.4)*, the specific optical density that is appropriate for the filter should be added. The value to be added should be equal to the known optical density of the filter multiplied by *G. (See B.2.1.3.)*

5.2 Maximum Specific Optical Density. The maximum specific optical density, D_m, should be calculated with the formula in Section 5.1 and with a light transmittance corresponding to the minimum level reached during the test. All values for maximum specific optical density should be corrected by subtracting the specific optical density that is equivalent for soot and other deposits on the photometer windows. The "clear beam" transmittance reading, T_c, should be used to calculate a specific optical density equivalent, D_c, by using the same formula but with a different subscript. A corrected value for maximum specific optical density should be calculated as follows:

$$D_m \text{ (corr.)} = D_m - D_c$$

5.3 Light Transmittance. For systems without "dark current" cancellation, a correction should be made for any percent light transmittance reading, T, approaching the "dark current" value, T_d. The corrected percent light transmittance, T', should be obtained from the following equation:

$$T' = 100\left[1-\frac{100 - T}{100 - T_d}\right] = 100\left[\frac{T - T_d}{100 - T_d}\right]$$

The result should be used to calculate specific optical density as described in Sections 5.1 and 5.2.

Chapter 6 Report

6.1 Documentation. The report *(see Appendix C)* should include the following items:

(1) A complete description of the specimen tested, including the type, manufacturer, shape, coloring, thickness, weight or density, and other appropriate dimensions

(2) A complete description of the test specimens, including the substrate or core, special preparation, and mounting

(3) Test specimen conditioning procedure

(4) Number of specimens tested

(5) Test conditions, such as the type of exposures, type of holder used, and exposure period

(6) Observations of the burning or smoldering characteristics of the specimens during test exposure, such as delamination, sagging, shrinkage, melting, and collapse

(7)* Observations of the smoke-generating properties of the specimens during exposure, such as the color of the smoke and the nature of the settled particulate matter

Copyright National Fire Protection Association
Provided by IHS under license with NFPA
No reproduction or networking permitted without license from IHS
Not for Resale

(8) A record of the geometrical factor, *G*, as calculated from measured values of chamber volume, *V;* photometer light path length, *L;* and exposed specimen area, *A (see Chapter 5)*

(9)* Test results calculated as described in Chapter 5, including the average and range on each set of specimens for D_m (corr.) and D_c

6.2 Test Termination. If the test is terminated on the basis of the 20-minute exposure limitation, this fact should be noted when reporting measurements that are observed at that time.

Chapter 7 Referenced Publications

7.1 The following documents or portions thereof are referenced within this recommended practice and should be considered as part of its recommendations. The edition indicated for each referenced document is the current edition as of the date of the NFPA issuance of this recommended practice. Some of these documents might also be referenced in this recommended practice for specific informational purposes and, therefore, are also listed in Appendix E.

7.2 NFPA Publication. National Fire Protection Association, 1 Batterymarch Park, P.O. Box 9101, Quincy, MA 02269-9101.

NFPA 270, *Standard Test Method for Measurement of Smoke Obscuration Using a Conical Radiant Source in a Single Closed Chamber*, 1998 edition.

Appendix A Explanatory Material

Appendix A is not a part of the recommendations of this NFPA document but is included for informational purposes only. This appendix contains explanatory material, numbered to correspond with the applicable text paragraphs.

A.1.1.1 It has been found that the results of this test method are not reliable enough to be used for purposes other than comparisons during material or product development.

A.1.1.3 A commentary describing the significance of specific optical density and appropriate considerations for the application of test results is included in Appendix D.

A.1.2.1 Other methods for measuring smoke have been reviewed and summarized by a number of authors, and information is presented in E.2.1.1. There is, at the present time, no basis for predicting the smoke obscuration that is generated by specimens upon exposure to heat or flame under any fire conditions other than those specified in the test method. Moreover, as with many other smoke-obscuration test methods, the correlation with measurements by other test methods has not been established.

A.1.3.5 Additional parameters, such as the maximum rate of smoke release, the total smoke released, the mass optical density, or the time to a fixed optical density level, could be more appropriate to particular situations. Such other parameters might not be obtainable with this test method.

A.2.1 A more detailed description of the suggested apparatus is given in Section B.1.

A.2.2.2 Commercially available panels of porcelain-enameled steel (interior surface) permanently laminated to asbestos-cement board and backed with galvanized steel (exterior surface), with a total thickness of $^3/_{16}$ in. (4.76 mm), have been found to be suitable.

A.2.3.5 Where line voltage fluctuations occur, a constant-voltage transformer might be needed to maintain the prescribed irradiance level.

A.2.7.1 The operation of a circular foil–type radiometer is described by R. Gardon in "An Instrument for the Direct Measurement of Intense Thermal Radiation," 1953.

A.3.1.3.1 Substrate or core materials for the test specimens should be the same as those for the intended application. Where a material or an assembly might be exposed to a potential fire on either side, both sides should be tested.

A.3.1.3.3 Finish materials, including sheet laminates, tiles, fabrics, other materials that are secured to a substrate material with adhesive, and composite materials not attached to a substrate can be subject to delamination, cracking, peeling, or other separations affecting their smoke generation. To evaluate these effects, supplementary tests, performed on a scored — that is, slit — exposed surface or on interior layers or surfaces, might be necessary.

A.3.4.4 Problems that are associated with interpretation of experimental results when unburned molten drips occur are discussed in Appendix D.

A.4.2.1 Charred residues on the specimen holder and horizontal rods should be removed to avoid contamination. An ammoniated spray detergent and soft scouring pads have been found effective in removing the residues.

A.4.2.2 Generally, ethyl alcohol has been found to be effective for cleaning the surfaces of the glass windows.

A.4.3.2 To increase the chamber wall's surface temperature to the stated level under adverse conditions, an auxiliary heater can be used. Conversely, to decrease this temperature, the exhaust blower can be used to introduce cooler air from the laboratory.

A.4.3.3 Periodic intervals have been shown by test experience normally to consist of two calibrations per test day.

A.4.5.9 In some cases, the transmittance can somewhat increase and subsequently decrease to the ultimate minimum transmittance.

A.6.1(7) Although it is not specifically recommended as part of the method, products of combustion can be drawn from the chamber at various times during the test for analysis. The physical properties of the smoke can be investigated by electrostatic or impact collection and various methods of particle analysis. The presence and concentrations of various toxic or irritating gaseous combustion products can be determined by a variety of analytical techniques, which are discussed in ASTM E 800, *Standard Guide for Measurement of Gases Present or Generated During Fires*. Such techniques can include, as appropriate, colorimetric gas detector tubes, gas chromatography methods, ion-selective electrodes, mass spectrometry methods, or Fourier-transform–infrared spectrometry methods.

A.6.1(9) Sufficient test results should result in the development of a smooth curve of D_s versus time.

Copyright National Fire Protection Association
Provided by IHS under license with NFPA
No reproduction or networking permitted without license from IHS
Not for Resale

Appendix B Apparatus Construction and Calibration

This appendix is not a part of the recommendations of this NFPA document but is included for informational purposes only.

B.1 Construction Details.

B.1.1 Radiant Heat Furnace. *(See Section 2.3.)* The furnace consists of a coiled wire or other suitable, electrical heating element (525 W or more) mounted vertically in a horizontal ceramic tube. The tube has an I.D. of 3 in. (76.2 mm) and an O.D. of $3^3/_8$ in. (85.7 mm) and is $1^5/_8$ in. (41.3 mm) long. The tube is bored out at one end to have a $3^1/_{32}$-in. (77.0-mm) I.D. and a depth of $^5/_8$ in. (15.9 mm) to accommodate the heating element. A $^1/_{16}$-in. (1.6-mm) asbestos paper gasket and three stainless steel reflectors are mounted behind the heating element. A $^3/_8$-in. (9.5-mm) asbestos-millboard disk, provided with ventilation and lead-wire holes, is positioned behind the heating element and used to center the assembly with respect to the front of the $^3/_8$-in. (9.5-mm) asbestos-millboard ring by means of a 6-32 stainless steel screw. The adjustment nuts on the end of the centering screw allow proper spacing of the furnace components. The cavities that are adjacent to the heating element assembly should be packed with glass wool. The furnace assembly is housed in a stainless steel tube that has a 4-in. (102-mm) O.D. and a 0.083-in. (2.1-mm) wall and that is $4^1/_8$ in. (105 mm) long. Two additional $^3/_8$-in. (9.5-mm) asbestos-board spacing rings and a rear cover of $^3/_8$-in. (9.5-mm) asbestos board complete the furnace. The furnace should be located centrally along the long axis of the chamber, with the opening facing toward the right wall and approximately 12 in. (305 mm) from it. The centerline of the furnace should be about $7^3/_4$ in. (197 mm) above the chamber floor.

B.1.2 Specimen Holder. *(See Section 2.4.)* The specimen holder should conform in shape and dimension to that shown in Figure 2.4. It should be fabricated by bending and brazing (or spot welding) 0.025-in. (0.6-mm)–thick stainless steel to provide a depth of $1^1/_2$ in. (38.1 mm) and to expose a specimen area $2^9/_{16}$ in. × $2^9/_{16}$ in. (65.1 mm × 65.1 mm). As described in Section 2.5, the holder should have top and bottom guides to permit accurate centering of the exposed specimen area in relation to the furnace opening. A 3-in. × 3-in. (76.2-mm × 76.2-mm) sheet of $^1/_2$-in. (12.7-mm) asbestos millboard, having a nominal density of 50 lb/ft^3 ± 10 lb/ft^3 (0.81 g/cm^3 ± 0.16 g/cm^3), should be used to back the specimen. A spring bent from a 0.010-in. (approximately 0.25-mm)–thick phosphor bronze sheet should be used with a steel retaining rod to hold the specimen and millboard backing securely in position during testing.

B.1.3 Support of Furnace and Specimen Holder. *(See Section 2.5.)* The framework shown in Figure 2.5 has welded to it a 2-in. (50.8-mm) long, horizontally oriented steel tube with a 5-in. (127-mm) O.D. and a $^1/_4$-in. (6.4-mm) wall, used to support the radiant heat furnace described in Section 2.3. This support tube should have provisions to align the furnace opening accurately so that it is $1^1/_2$ in. ± $^1/_{16}$ in. (38.1 mm ± 1.6 mm) away from, parallel to, and centered horizontally and vertically to within $^1/_{16}$ in. (1.6 mm) of the exposed specimen area. Three tapped holes with screws that are equidistantly positioned around the furnace support tube, or one screw at the top of the support in conjunction with two adjustable (vertically along the support tube) metal guide strips mounted horizontally inside the tube, are to provide for adequate alignment.

The framework should have two $^3/_8$-in. (9.5-mm) diameter transverse rods of stainless steel to accept the guides of the specimen holder as described in B.1.2. The rods should support the holder so that the exposed specimen area is parallel to the furnace opening. Spacing stops should be mounted at both ends of each rod to permit quick and accurate lateral positioning of the specimen holder.

B.1.4 Photometric System. *(See Section 2.6.)* The photometric system should consist of a tungsten-filament light source (Type 1630 6.5-volt lamp, maintained at 4 V ± 0.2 V) and a photodetector with an S-4 spectral sensitivity response. The photometer should be oriented vertically to reduce variations in measurement, which are brought about by stratification of the smoke generated by the specimens being tested. This system is shown in Figures 2.6.2(a) and (b). The window in the chamber floor through which the light beam passes is provided with an electric heater to maintain a temperature of at least 125°F (52°C) to minimize smoke condensation. The collimated beam inside the chamber should have a path length of 36 in. ± $^1/_8$ in. (914 mm ± 3 mm). The approximately circular light "spot" is centered entirely within the sensing area of the detector. A typical photomultiplier photometer system will require a high-voltage dc power supply and a neutral density filter of sufficient optical density to produce a convenient signal level for the indicator or recorder. The photometer system should be capable of permitting the recording of reliable optical density values of at least 6.0, corresponding to transmittance values of 0.0001 percent of the incident light. *(See B.2.1.1.)*

The two optical platforms and their housings should be kept in alignment with three metal rods $^1/_2$ in. (12.7 mm) in diameter and fastened securely into $^5/_{16}$ in. (7.9-mm) thick, externally mounted, top and bottom plates, and the rods should be symmetrically arranged about the collimated light beam.

B.1.5 Radiometer. *(See Section 2.7.)* The body temperature of the radiometer should be monitored with a 100°F to 220°F (38°C to 104°C) thermometer in a brass well $^1/_2$ in. × $^1/_2$ in. × $1^1/_2$ in. (12.7 mm × 12.7 mm × 38.1 mm) that has been drilled to accept the thermometer with a close fit. Silicone grease can be used to provide good thermal contact.

The circular, receiving surface of the radiometer should be spray-coated with an infrared-absorbing black paint containing a silicone vehicle. The radiometer should be calibrated calorimetrically in accordance with the procedure summarized in B.2.2.

B.1.6 Chamber Wall Thermocouple. *(See Section 2.8.)* A thermocouple is mounted with its junction secured to the geometric center of the inner rear wall panel of the chamber, using a $^1/_4$-in. (6.4-mm) thick polystyrene foam disk cover and epoxy cement.

B.1.7 Burner. *(See Section 2.11.)* The multiple-flamelet burner is a six-tube burner with construction details as shown in Figure 2.4.

Its vertical tubes are made from stainless steel tubing with an $^1/_8$-in. (3.2-mm) O.D. and a 0.031-in. (0.8-mm) wall. Two tubes are bent 180 degrees into the trough, two tubes are bent 135 degrees from the vertical, and two tubes are bent 90 degrees from the vertical.

All tubes should be crimped at the tip to reduce the opening diameter to 0.055 in. (1.4 mm). The horizontal manifold section of the burner consists of stainless steel tubing with a $^1/_4$-in.

Copyright National Fire Protection Association
Provided by IHS under license with NFPA
No reproduction or networking permitted without license from IHS
Not for Resale

(6.4-mm) O.D. and a 0.035-in. (0.9-mm) wall. The other end of the burner is attached to a fitting in the chamber floor.

B.1.8 Chamber Pressure Regulator. A simple pressure regulator consists of an open, water-filled bottle and a length of flexible tubing, one end of which is connected to a sampling port on the top of the chamber. The other end of the tubing is inserted 4 in. (102 mm) below the water surface. The bottle is located at the same level as the floor of the chamber.

B.2 Calibration of Test Equipment.

B.2.1 Photometric System.

B.2.1.1 When the photometric system is first assembled, and as necessary after it has been used or when a malfunction is suspected, the calibration of the photometer should be checked by interrupting the light beam with calibrated neutral density filters. The filters should cover the full range of the instrument. Optical density values that are measured by the photometer should be within 3 percent of the calibrated values.

B.2.1.2 Shifts in "dark current" levels between tests, excessive zero shifts during test, or lack of calibration indicate a need for inspection of the photometer system.

B.2.1.3 The optical density of a supplementary filter that is used to extend the measuring range of the photometer should have an accuracy of ± 3 percent.

B.2.2 Radiometer. The radiometer is calibrated by placing it at suitable distances from a radiant energy source while maintaining its body temperature at 200°F ± 5°F (93°C ± 3°C) with controlled airflow through the rear-mounted cooler and by then measuring its electrical output as a function of the irradiance level. The irradiance level is determined calorimetrically by measuring the rate of temperature rise of a blackened, thin copper disk of known weight, area [$1^1/_2$-in. (38.1-mm) diameter], specific heat, and absorptivity, in place of the radiometer. The measured millivolt output of the radiometer, at a body temperature of 200°F (93°C) and corresponding to an irradiance level of 2.2 Btu/sec · ft^2 ± 0.04 Btu/sec · ft^2 (2.5 W/cm^2 ± 0.05 W/cm^2), is used to establish the furnace control settings as discussed in 4.3.2.

B.2.3 Chamber Pressure Manometer — Leakage Rate Test. For purposes of standardization, a leakage rate test should be periodically conducted by using the manometer and tubing as described in Section 2.10. The chamber is pressurized to 3 in. (76 mm) of water by introducing compressed air through a gas-sampling hole in the top. The decrease in pressure from 3 in. to 2 in. (76 mm to 51 mm) of water is timed with a stopwatch. This time should not be less than 5.0 minutes.

B.2.4 Standard Smoke-Generating Materials. For checking operational and procedural details of the equipment and the test method described in this document, two standard materials can be used: alpha-cellulose (smoke density) (NIST SRM 1006) and plastic (smoke density) (NIST SRM 1007). Under nonflaming conditions a single layer of alpha-cellulose — that is, cotton linters, paper, and, under flaming conditions, plastic sheet — should provide repeatable values for maximum specific optical density in two portions of the measuring range. Use of these standard materials does not obviate the recommendation for following the calibration and standardization procedure outlined in this recommended practice.

Appendix C Reporting Results

This appendix is not a part of the recommendations of this NFPA document but is included for informational purposes only.

C.1 Report Form. Figure C.1 is a suggested report form that could be used with the smoke density chamber as described in this recommended practice.

Copyright National Fire Protection Association
Provided by IHS under license with NFPA
No reproduction or networking permitted without license from IHS
Not for Resale

FIGURE C.1 Form for reporting performance and results of smoke density test.

Sample code _____ **Test no.** _____ **Date** _____

Lab code _____ **Operator** _____ **Time** _____

Recorded data or curve

_____

Time (min.) % trans. (D_s)_____

Operating conditions

Radiometer reading _____ mV;

Irradiance _____ W/cm^2

Furnace voltage _____ V

Burner fuel _____ cm^3/min. air;

_____ cm^3/min. propane

Thermal exposure: ❑ flaming ❑ smoldering

Chamber pressure _____ in. H_2O

Chamber wall temp. _____ °C

Chamber surface condition _____

_____

Burner: ❑ standard ❑ special

Sample

Description _____

Manufacturer _____

Preconditioning: temp. _____ °C

Duration _____ min.

Conditioning: temp. _____ °C

RH _____ %; Duration _____ min.

Thickness: _____ in. (mm); Density _____ g/cm^3

or _____ lb/ft^3

Initial wt. _____ mg; Final wt. _____ mg;

% Loss _____

Special conditions _____

_____

Results

Minimum trans. _____% at _____ min.

Max. specific optical density, D_m = _____

Clear beam reading = _____ %;

Equiv. D_c _____

D_m (corr.) = $D_m - D_c$ = _____

Remarks _____

Copyright National Fire Protection Association
Provided by IHS under license with NFPA
No reproduction or networking permitted without license from IHS
Not for Resale

Appendix D Commentary

This appendix is not a part of the recommendations of this NFPA document but is included for informational purposes only.

D.1 Introduction. The smoke density chamber test was developed at the National Bureau of Standards (now National Institute of Standards and Technology) and was first described in an ASTM research symposium in 1967. [1, 9] Since that time, numerous publications have reported on its applicability and on studies of attempts at correlations of results and of the use of the test method to predict real-scale fire information. [2–20]

D.1.1 The method is somewhat like the box-type test, which was developed by Rohm and Haas. [21, 22] However, it provides certain modifications in the nature of specimen exposure and the capability for quantitative measurement of the smoke produced.

The advantages offered by this test method include the following:

(1) The smoke collection chamber essentially is sealed, so that all smoke produced during a test is retained.
(2) Only one surface of a test specimen is exposed to fire or radiant heating, thus providing a measure of effectiveness of surface treatment assisting in the control of smoke release.
(3) A vertical photometer is used to avoid measurement errors resulting from smoke stratification.
(4) Provisions are included for reporting smoke measurements in terms of specific optical density, which is a measurement of the amount of smoke produced and therefore useful for comparing one composition of a material against another.

D.1.2 Measurements that are made with the test relate to light transmission through smoke.

D.2 Features of Test Method.

D.2.1 The following two exposure conditions can be simulated by the test:

(1) Radiant heating in the absence of ignition
(2) Open-flame combustion of the specimen in the presence of supporting radiation

These two conditions were selected as representative of two types of fire involvement. The irradiance level of 2.2 Btu/sec · ft^2 (2.5 W/cm^2) was selected as the highest at which most cellulosics would pyrolize without self-ignition. This irradiance level is much lower than that which would exist in a compartment after flashover. It more nearly simulates conditions in the initial stages of a fire.

D.2.1.1 From a scientific viewpoint, having constant irradiance over all portions of the specimen would be desirable. From a practical point of view, this condition is not feasible, because the size and heat input of the furnace would have to be greatly increased. It was considered therefore more practical to accept a modest nonuniformity of irradiance across the surface of the specimen. Such irradiance is not defined in terms of radiance units, but rather by specifying the dimensions of the furnace geometry and the specimen spacing. Thus, radiant-configuration geometry was selected as a means of specifying the variability of surface irradiance. The average irradiance, which is specified in the test method, is that measured by the radiometer described in this document, an instrument sensitive only to the $1^1/_2$-in. (38.1-mm)–diameter central area of the specimen holder.

D.2.2 Figure D.2.2 shows the result of one survey of irradiance across the specimen diagonal. This result suggests that the overall average effective flux level during nonflaming pyrolysis is probably about 2.0 Btu/sec · ft^2 (2.3 W/cm^2). Although this degree of nonuniformity is short of technical perfection, it is accepted as a practical compromise, considering the use for which the test method is intended.

FIGURE D.2.2 Diagonal survey of irradiance at specimen during operation at nominal 2.2 Btu/sec · ft^2 (2.5 W/cm^2).

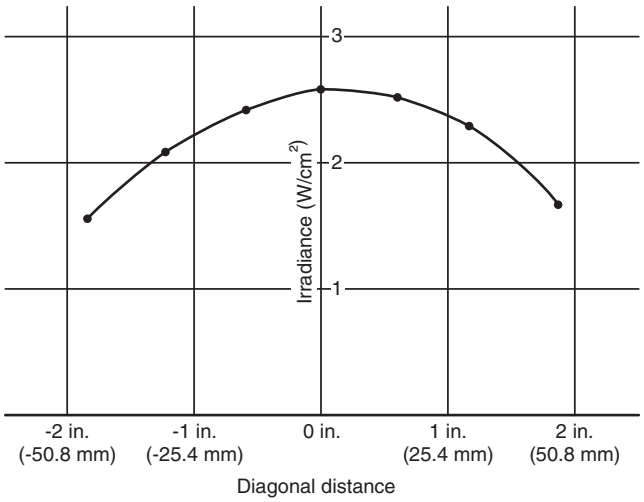

D.2.2.1 The primary measurement, which is made during the conduct of the test, is of the amount of light transmitted, expressed as a fraction or percentage of the initial light transmitted by the optical system. The minimum percentage of the light transmitted is, in turn, used to calculate the maximum specific optical density, D_m, in accordance with Chapter 5. There is some advantage to using specific optical density as a value with which to evaluate results, as compared with using the percentage of light transmittance.

D.2.2.2 The use of this unit of smoke measurement is based on Bouguer's law of light attenuation, expressed as follows:

$$T = T_o e^{-\sigma L}$$

where:

T = percent flux transmittance
T_o = 100, the initial transmitted flux
σ = attenuation coefficient
L = length of optical path
e = 2.7183

D.2.2.3 Although the smoke that is produced from fire usually does not meet the requirement of a monodispersed aerosol, it has been found to behave in a photometric manner such that, for the purposes intended, optical density can be considered to be roughly proportional to the smoke particulates that are produced. The unit of measurement — specific optical density, D_s — has been introduced to serve as a conveniently factored rating scale, as follows:

Copyright National Fire Protection Association
Provided by IHS under license with NFPA
No reproduction or networking permitted without license from IHS
Not for Resale

$$D_s = (V/AL)d = (V/AL)\log(100/T)$$

where $(V/AL) = 132$

Previous draft versions of this test method proposed that, where the smoke produced exceeded the measurement capability of the apparatus or where only small specimens were available, specimens of less than standard size could be tested and the results extrapolated to the standard specimen size. This procedure should not be used for several reasons, one of which involves the nonuniformity of irradiance and pilot flame exposure.

D.2.2.3.1 Certain other test methods report smoke simply in terms of light transmission. The problem with such a procedure is that a person who is unfamiliar with the characteristics of smoke aerosols might assume that the percent of light transmittance is a reciprocal, linear function of the quantity of smoke produced, thus concluding that as the quantity of smoke produced is doubled, the percentage of light transmittance is cut in half. This supposition is not true.

D.2.2.4 The concept of specific optical density, while old in terms of chemical photometric practice, was first introduced for measuring smoke as part of the smoke density chamber test method. It is based on Bouguer's law, and it permits reporting smoke development in terms that recognize the area of the specimen, the volume of the box, and the optical-path length of the photometer. Specific optical density is without dimension. Its value should, however, be recognized as relating to the specimen only in the tested thickness. In theory, it has the unique advantage of providing a basis for estimating the smoke optical density or light-obscuring properties of smoke that can be developed under the same assumption of uniform smoke–air mixing and under similar fire exposure conditions. [23] At present, techniques for using this theoretical approach have not been developed to a practical stage because of the following influences:

(1) Variations in types of fire exposure
(2) Rate of involvement of a material in a fire
(3) Ventilation characteristics of the compartment
(4) Degree of stratification of the accumulated smoke

These are, in most instances, undetermined variables that greatly influence light transmission through smoke resulting from a fire.

D.3 Factors Influencing the Test. During development of the test method, many factors were considered that could influence the measurements. Some of the more important of these are mentioned and briefly outlined in D.3.1 through D.3.4.

D.3.1 It was observed that, in spite of significant thermal convection mixing, smoke near the top of the cabinet was obviously more dense. This fact was verified by experimental measurements. As a result, it was apparent that a vertical photometer would yield a much more representative measurement of smoke accumulation than would a horizontal unit at one position in the chamber.

D.3.2 Experiments showed that the optical density of the accumulated smoke was sensitive to the spacing between the specimen face and the plane of the furnace opening. The experiments seem to suggest that the sensitivity was caused by the following two effects:

(1) Close spacing, which caused more smoke to enter the furnace and become consumed there
(2) Reduced air circulation moving past the specimen, which inhibited open-flame combustion

As a result, the separation called for in B.1.3 — of $1\frac{1}{2}$ in. $\pm \frac{1}{16}$ in. (38.1 mm ± 1.6 mm) — was selected as a fair compromise for the purpose of standardization. If this spacing is not held, a small, systematic change should be expected in smoke measurement. Similarly, it is necessary to maintain the specified spacing of 3.0 in. $\pm \frac{1}{32}$ in. (76.2 mm ± 0.8 mm) between the heater face and the specimen surface.

D.3.3 The use of aluminum foil to wrap the back and edges of the specimen was introduced for better standardization, because it was found that if smoke was allowed to leak out the back and edges of the specimen holder, the various ways in which this could occur introduced an undesirable variability in the measurements.

D.3.4 The question of how to assess, in an equitable fashion, the smoke production of thermoplastics has been a vexing one since the early development of the test. The decision to use a vertical specimen orientation was based on the knowledge that fire behavior and thus smoke production differ in vertical and horizontal positions. Because the method was considered most likely to be used for experimental evaluation of interior-wall–finish products, the vertical specimen position was selected as more relevant.

Obviously, the problem of thermoplastic remained. Portions of such materials were found to melt and drip in varying degrees to the floor of the chamber. Thus, the smoke resulting from such materials was less than would have been expected if all the material had remained in the flux field. Whether such materials should be penalized or credited for such behavior has not been validated by definitive experimental and theoretical studies. In spite of this uncertainty, during the latter development stages of the test methods, it was decided to provide a trough on the specimen holder to collect some of the molten residue and permit its consumption.

During the processing of this recommended practice, questions were raised about the usefulness of the trough because the thermal exposure to the material within it was less severe than that to material that remained in the normal, specimen position. A small-scale study showed that thermoplastic materials differed widely: whereas appreciable smoke developed from one material placed in the trough, only a small quantity of smoke developed from another material placed there. This finding, however, did not seem to be too different from the performance that might be expected from the same materials in another fire exposure. Thus, there does not seem to be any reason to ban thermoplastic materials that melt or drip into the trough during the test.

D.4 Precision.

D.4.1 In any method, one of the important considerations is the degree to which a test, when applied to a given material, will yield constant results. Since this test results in destruction of the specimen, the results of any test to determine precision are affected not only by any random errors inherent in the procedure but also by any variation in the properties of the replicate specimens. Thus, in studying the degree to which experimental results can be repeated within a given laboratory, it is desirable to use a material from which specimens of uniform composition and dimensional characteristics can be prepared.

Copyright National Fire Protection Association
Provided by IHS under license with NFPA
No reproduction or networking permitted without license from IHS
Not for Resale

This fact was recognized in planning the large interlaboratory study of the precision of the measurement method. In spite of this planning, some of the experimental variability that was observed was related undoubtedly to variations in the replicate specimens. In at least one instance, variation in thickness as great as 20 percent was observed. To assist in identifying variability due to this cause, requirements for weighing specimens have now been included as a part of the test procedure.

D.4.2 Various changes were made in the test method description as adopted, as compared with the description used for the conducted round-robin test. These included running additional samples when the results for three specimens were highly variable, maintenance of the pilot burner, deletion of data inconsistent with the equipment, and improved calibration and alignment procedures. With these changes, the given precision data should be assumed to be conservative as they relate to the adopted test method. Better precision might result if another laboratory round-robin study is conducted.

D.4.2.1 When studying the results reported by the various laboratories participating in the round-robin study, it was realized that the draft of the test method given to the laboratories to follow failed to contain a section describing conditions under which data obtained from the test should be excluded. For instance, certain materials were found to ignite under the nonflaming exposure condition. Obviously, these were not nonflaming-exposure results. Another cause for such questioning of data was results that exceeded the measurement capability of the photometer.

D.5 Reporting of Results. One of the obvious needs with a test method of this type is to consider ways in which the experimental data should be reported. Early draft versions of this recommended practice contained a recommendation that a correction factor be applied to the measured D_m (corr.). The reporting of D_m as a preferred measurement is based on the following fact: the deposit that remains after a test represents a part of the smoke produced. Thus, it seems irrational to subtract this value unless it can be shown that the deposit results from late accumulation following a peak smoke reading. The procedures of the test method seem to make this unlikely.

D.5.1 Experience has shown that the determination of the value of T, which is used eventually to calculate D_m (corr.), is subject to variations in operator technique during the chamber venting procedure.

D.5.2 The introduction of the correction factor, although not in itself a significant technical problem, suggests a technical sophistication that simply is not justified on the basis of the intended use of the data. The effect of this fact was noticed during analysis of the round-robin experimental data. The results were found to be more consistent for the uncorrected data (D_m).

D.6 Limitations on Application of Smoke Measurement Data from the Test Method.

D.6.1 Problems of the smoke obscuration during unwanted fires have been recognized for many years. Fire fighters face them daily in their work. However, several problems have tended to inhibit the use of this test method for limiting the acceptability of materials or products on the basis of smoke production, including the following:

(1) The extent to which smoke measurement with this test method assesses smoke hazard, or even predicts smoke release in real, unwanted full-scale fires [1, 11–13, 16, 19, 24]

(2) Most materials or products, when burning, release more smoke when a larger amount of the material or product has burnt, so that a small-scale test in which the material is exposed until the sample is consumed completely could overpredict smoke by materials that are not consumed completely in real-scale fires.

(3) This test method contains only two fire exposure conditions, out of a wide range of potential exposure conditions in real fires, and there is no overall agreement as to the applicability of those exposure conditions.

(4) As is usual in small-scale test methods, results obtained from this test method have proven to be affected by variations in specimen geometry, surface orientation, thickness (either overall or individual layer), mass, and composition.

Thus, any rank ordering of materials by this test method should be recognized as based only on the fire exposure conditions applied, and, in fact, the test method develops different rankings depending on whether a ranking is based on the nonflaming exposure or the flaming exposure. All of the parameters that affect fire behavior will influence the amount of smoke that is produced.

Thus, it is unrealistic to place great confidence in smoke measurement by this test method as a unique and absolute measure of smoke production during building fires. In fact, results from this test method should be used only during research and development of materials and products, and for comparative purposes.

If significant changes in smoke levels are to be expected during a real-scale unwanted fire, these changes would require significant differences in smoke release in any small-scale test, as well as differences in fire performance. To limit the type and size of fire that could develop, severe limitations would have to be placed on smoke production of both the building finish material and the furnishings and contents, and comprehensive fire prevention and protection measures would have to be instituted.

D.6.2 It is important to remember that, for any given thermal exposure condition, the smoke that is produced when a fire occurs is related to the thickness and density of the material involved. The importance of specimen thickness to the results of this test method is illustrated in Figure D.6.2. The indication deviations from a linear relationship of D_m to specimen thickness result from the decreasing pyrolysis rate of the specimen as the burning layer progresses into the specimen and, also, from the increasing rate of smoke dropout and condensation as high smoke concentration develops.

Copyright National Fire Protection Association
Provided by IHS under license with NFPA
No reproduction or networking permitted without license from IHS
Not for Resale

FIGURE D.6.2 D_m for spruce as a function of specimen thickness under nonflaming conditions.

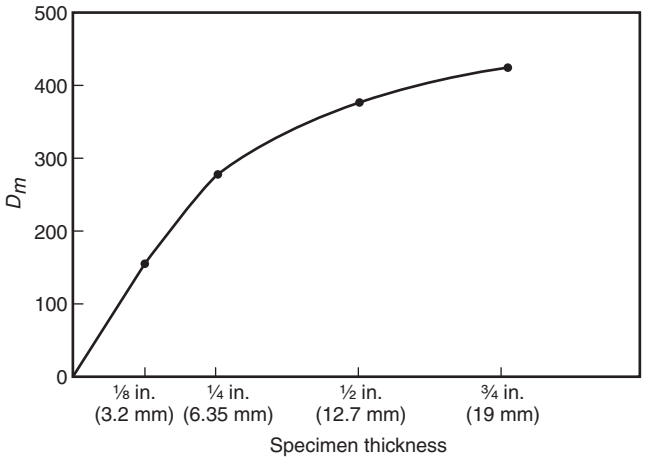

D.6.3 The smoke density chamber provides a means for characterizing smoke production for research and development only. It serves as a way for reporting an experimental rate of smoke production and a time at which specific smoke levels are reached under the applied test conditions.

D.7 Endnotes for Appendix D.

[1] Gross, D., Loftus, J. J., and Robertson, A. F. 1967. "Measuring Smoke from Burning Materials." *Symposium on Fire Test Methods — Restraint and Smoke* (1966), ASTM STP 422, American Society for Testing and Materials, 166.

[2] Gross, D., Loftus, J. J., Lee, T. G., and Gray, V. F. 1969. "Smoke and Gases Produced by Burning Aircraft Interior Materials." *NBS Building Sciences Series.* BSS 18, February. U.S. Government Printing Office, Washington, DC.

[3] Brenden, J. J. 1971. "Usefulness of a New Method for Smoke Yield from Species and Panel Products." *Forest Products Journal* 21: 23–28.

[4] Lee, T. G. 1971. "Interlaboratory Evaluation of Smoke Density Chamber." *NBS Tech. Note 708.*

[5] Lee, T. G. 1973. "The Smoke Density Chamber Method for Evaluating the Potential Smoke Generation of Materials." *NBS Tech. Note 757.*

[6] ASTM Committee E05.2. 1976. "Interlaboratory Test Data for the Smoke Chamber Test Method." RRE-5-1002.

[7] Gaskill, J. R. 1970. "Smoke Development in Polymers During Pyrolysis or Combustion." *Journal of Fire and Flammability* 1:183–216.

[8] Chien, W. P., and Seader, J. D. 1975. "Prediction of Specific Optical Density for a Smoke Obscuration in an NBS Smoke Density Chamber." *Fire Technology* 11 (3): 206-217.

[9] Grand, A. F. 1976. "Defining the Smoke Density Hazard of Plastics." *Journal of Fire and Flammability* 7: 217-233.

[10] Breden, L. H. and Meisters, M. 1976. "The Effect of Sample Orientation in the Smoke Chamber." *Journal of Fire and Flammability* 7: 234-47.

[11] Babrauskas, V. 1981. "Application of Predictive Smoke Measurements." *Journal of Fire and Flammability* 12: 51-64.

[12] Quintiere, J. G. 1982. "Smoke Measurements: An Assessment of Correlations Between Laboratory and Full-Scale Experiments." *Fire and Materials* 6: 145-160.

[13] Hirschler, M. M. 1990. "Smoke in Fires: Obscuration and Toxicity." Business Communications Company Conference on Recent Advances in Flame Retardancy of Polymeric Materials, May 15-17, 1990, Stamford, CT, eds. G. S. Kirshenbaum and M. Lewin, Norwalk, CT, 70–82.

[14] Hirschler, M. M. 1993. "Analysis of an Attachment for Use with the National Bureau of Standards Smoke Density Chamber to Enable Measurements of Smoke Obscuration to be Done at Different Orientations." *Fire and Materials* 17: 173–83.

[15] Fritz, T. W., and Hunsberger, P. L. 1995. "Smoke Chamber Measurements." 20th. Int. Conf. Fire Safety, ed. C.J. Hilado, Jan. 9-13, 1995, San Francisco, CA, 200–211.

[16] Hirschler, M. M. 1991. "How to Measure Smoke Obscuration in a Manner Relevant to Fire Hazard Assessment: Use of heat release calorimetry test equipment." *Journal of Fire Sciences* 9: 183–222.

[17] Hirschler, M. M. 1992. "Effect of Orientation on the Smoke Emitted by Materials in the NBS Smoke Density Chamber." Business Communications Company 3rd Conference on Recent Advances in Flame Retardancy of Polymeric Materials, May 19-21, 1991, Stamford, CT, ed. M. Lewin, Norwalk, CT, 320–327.

[18] Hirschler, M. M. "Can Heat Release Really Predict the Flame Spread of Electrical Cables?" 2nd Int. Fire Materials Conf. and Exhibition, Crystal City, VA, Sept. 23-24, 1993, 181–190.

[19] Hirschler, M. M. 1993. "Comparison of Smoke Release Data from Full Scale Room Tests with Results in the Cone Calorimeter and the NBS Smoke Chamber." Proc. Interflam '93, March 30-1 Apr. 1993, Oxford, UK, Interscience Communications, London, UK, 203-212.

[20] Cornelissen, A. A. 1992. "Smoke Release Rates: Modified Smoke Chamber versus Cone Calorimeter–Comparison of Results." *Journal of Fire Sciences* 10: 3–19.

[21] Bartosic, A. J., and Rarig, F. J. 1967. "Evaluation of the XP2 Smoke Density Chamber." *Symposium on Fire Test Methods — Restraint and Smoke* (1966), ASTM STP 422, American Society for Testing and Materials, 106.

[22] ASTM D 2843, *Standard Test Method for Density of Smoke from the Burning or Decomposition of Plastics*, 1993.

[23] Robertson, A. F. 1975. "Estimating Smoke Production During Building Fires." *Fire Technology* 11: (2) 80–94.

[24] Yuill, C. H., et al. 1971. "The Control of Smoke in Building Fires — A State-of-the-Art Review." *Materials Research and Standards* 11: (4) 16–24.

Appendix E Referenced Publications

E.1 The following documents or portions thereof are referenced within this recommended practice for informational purposes only and are thus not considered part of its recommendations. The edition indicated here for each reference is the current edition as of the date of the NFPA issuance of this recommended practice.

E.1.1 NIST Publications. National Institute of Standards and Technology, U.S. Department of Commerce, Fire Research Information Service, Building and Fire Research Laboratory, Gaithersburg, MD 20899.

SRM 1006, *Alpha Cellulose (Smoke Density).*

SRM 1007, *Plastic (Smoke Density).*

E.1.2 Other Publications.

Gardon, R. 1953. "An Instrument for the Direct Measurement of Intense Thermal Radiation." *Review of Scientific Instruments* 24: 366–370.

Copyright National Fire Protection Association
Provided by IHS under license with NFPA
No reproduction or networking permitted without license from IHS
Not for Resale

ASTM E 800, *Standard Guide for Measurement of Gases Present or Generated During Fires*, 1995.

E.2 Selected Papers for Further Study.

E.2.1 The following list of papers has been selected as an introduction to a much broader list of documents relating to smoke problems during building fires. In selecting these references, emphasis has been placed on early, English-language work. There is a considerable body of foreign-language publications of great merit, but, with few exceptions, these have not been included. Also, papers referenced in Section E.1 have not been included.

E.2.1.1 Selected Papers.

Bell, D., and Lieberman, P. 1973. "Smoke and Fire Propagation in Compartment Spaces." *Fire Technology* 9 (2): 91–100.

Bono, J. A., and Breed, B. K. 1966. "Smoke Ratings in Relation to Visual Observations." *Fire Technology* 2 (2): 146–158.

Carhart, H., Hazlett, R. N., Johnson, F., and Stone, J. P. 1973. "The Transport of Hydrogen Chloride by Soot from Burning Polyvinylchloride." *Journal of Fire and Flammability* 4: 42–51.

Christian, W. J., and Waterman, T. F. 1971. "Ability of Small-Scale Tests to Predict Full-Scale Smoke Production." *Fire Technology* 7 (4): 332–344.

Comeford, J. J., and Birky, M. 1972. "A Method for the Measurement of Smoke and HCl Evolution from Poly (vinyl chloride)." *Fire Technology* 8 (2): 85–90.

DiPietro, J., and Stepniczka, H. 1971. "A Study of Smoke Density and Oxygen Index of Polystyrene ABS and Polyester Systems." *Journal of Fire and Flammability* 2: 36–53.

"Explanatory Paper on Control of Smoke Movement in High Buildings." National Building Code of Canada, Nat. Res. Council, Canada, NRC, No. 11413.

Fackler, J. B. 1967. "Fire and Smoke Invasion of Apartments." *Symposium on Fire Test Methods — Restraint and Smoke* (1966), ASTM STP 422, American Society for Testing and Materials.

Fristrom, R. 1973. Annual Summary Report (July 1972 to 30 June 1973), App. Phys. Lab., Johns Hopkins Univ., Rept. No. FPP A73.

Galbreath, M. 1968. "Fire in High Buildings." National Research Council of Canada, Fire Study, Vol. 21, NRC No. 10081, Ottawa.

Gaskill, J. R. 1970. "Smoke Development in Polymers During Pyrolysis or Combustion." *Journal of Fire and Flammability* 1: 183–216.

Gaskill, J. R., and Veith, C. R. 1968. "Smoke Opacity from Certain Woods and Plastics." *Fire Technology* 4 (3): 185–195.

Haggerty, J. R. 1970. "A New Look at Smoke Stop Partitions." *Fire Technology* 6 (2): 111–122.

Heselden, A., and Hinkley, P. L. 1970. "Smoke Travel in Shopping Malls — Experiments in Cooperation with Glasgow Fire Brigade." Part I, Joint Fire Res. Org., *Fire Research Note 832*. See also *Fire Research Abstracts and Reviews* 1970. 12 (3): 234.

Hilado, C. 1970. "The Effect of Chemical and Physical Factors on Smoke Evaluation from Polymers." *Journal of Fire and Flammability* 1: 217–238.

Hilado, C. J. 1969. "Smoke from Cellular Polymers." *Fire Technology* 5 (2): 130–139.

Hinkley, P. L. 1970. "The Flow of Hot Gases Along an Enclosed Shopping Mall — A Tentative Theory." Joint Fire Res. Org., *Fire Research Note 807*. See also *Fire Research Abstracts and Reviews*, 12 (3): 235.

Jin, T. 1971. "Visibility through Fire Smoke (Part 2, Visibility of Monochromatic Signs through Fire Smoke)." *Report of Fire Res. Inst. of Japan* 33: 31–48.

Jin, T. 1978. "Visibility through Fire Smoke." *Journal of Fire and Flammability* 9: 145–60.

Jin, T. 1981. "Studies of Emotional Instability in Smoke from Fires." *Journal of Fire and Flammability* 12: 130–142.

Little, Arthur D. 1952. "Fire Gas Research Report." *NFPA Quarterly* 45 (3): 280–306.

McGuire, J. H., Tamura, G. T., and Wilson, A. G. "Factors in Controlling Smoke in High Buildings." ASHRAE Symposium, Fire Hazards in Buildings (January 1970), 8–13.

Mikkola, E. (VTT, Finland), First Int. Cone Calorimeter Users' Seminar and Workshop, London, UK, January 19, 1990.

"Movement of Smoke on Escape Routes in Buildings." (Proceedings of the Symposium held at Watford College of Technology). 1971. Joint Fire Res. Org., Her Majesty's Stationery Office, London.

Mulholland, G. W. 1988. "Smoke Production and Properties." Section 1, Chapter 25, *SFPE Handbook of Fire Protection Engineering* (1st ed.), eds. P.J. DiNenno et al., Quincy, MA, NFPA, 1/368-1/377.

Ostman, B. "Comparison of Smoke Release from Building Products." *Int. Conf. FIRE: Control the Heat-Reduce the Hazard*, Fire Research Station, October 24-25, 1988, London, UK, paper 8.

Ostman, B. 1992. "Smoke and Soot." Chapter 8c, *Heat Release in Fires*. V. Babrauskas and S. J. Grayson, eds. London: Elsevier, 233–250.

Rasbash, D. J. 1967. "Smoke and Toxic Products Produced at Fires." *Trans. J. Plastics Inst.* 55–61.

Robertson, A. F. 1973. "Tests Indicate Venting Increases Smoke Production from Some Polymerics." *Fire Engineering* 126 (9): 97–98.

Shaw, C., and Tamura, G. 1973. "Basis for the Design of Smoke Shafts." *Fire Technology* 9 (3): 209–222.

Shern, J. H. 1966. "Smokeproof Towers in Center Core Structures." *Fire Technology* 2 (4): 303–307.

Shern, J. H. 1967. "Smoke Contribution Factor in Fire Hazard Classification of Building Materials." *Symposium on Fire Test Methods — Restraint and Smoke* (1966), ASTM STP 422, American Society for Testing and Materials.

Shorter, G. W., et al. 1960. "The St. Lawrence Burns." *NFPA Quarterly* 53 (4): 300–316.

Shorter, G. W., and Wilson, A. G. 1970. "Fire and High Buildings." *Fire Technology* 6 (4): 292–304.

Silversides, R. G. 1967. "Measurement and Control of Smoke in Building Fires." *Symposium on Fire Test Methods — Restraint and Smoke* (1966), ASTM STP 422, American Society for Testing and Materials.

Smith, E. E. 1972. "Measuring Rate of Heat, Smoke, and Toxic Gas Release." *Fire Technology* 8 (3): 237–245.

Smith, E. E. 1973. "Evaluation of the Fire Hazard of Duct Materials." *Fire Technology* 9 (3): 157–170.

Wagner, J. P. 1972. "Survey of Toxic Species in the Pyrolysis of Combustion of Polymers." *Fire Research Abstracts and Reviews* 14 (1): 1–23.

Woolley, W. D., and Wadley, A. I. 1970. "The Thermal Decomposition Products of Phenol-Formaldehyde Laminates, Part 2. The Production of Carbon Monoxide and Carbon Dioxide." Joint Fire Res. Org., *Fire Research Note 852*.

Wood, P. G. 1972. "The Behavior of People in Fire." Joint Fire Res. Org., *Fire Research Note No. 953*, 113.

Copyright National Fire Protection Association
Provided by IHS under license with NFPA
No reproduction or networking permitted without license from IHS
Not for Resale

Yuill, C. H. 1970. "The Life Hazard of Bedding Fires." *Journal of Fire and Flammability* 1: 312–323.

E.2.1.2 Smoke Test Methods.

ASTM D 2843, *Standard Test Method for Density of Smoke from the Burning or Decomposition of Plastics*, 1999.

ASTM D 4100, *Standard Test Method for Gravimetric Determination of Smoke Particulates from Combustion of Plastic Materials*, 1982.

ASTM D 5424, *Standard Test Method for Smoke Obscuration Caused by Burning Cables in a Vertical Configuration*, 1999.

ASTM E 84, *Standard Test Method for Surface Burning Characteristics of Building Materials*, 2000.

ASTM E 162, *Standard Method of Test for Surface Flammability of Materials Using a Radiant Heat Energy Source*, 1998.

ASTM E 603, *Standard Guide for Room Fire Experiments*, 1998.

ASTM E 800, *Standard Guide for Measurement of Gases Present or Generated During Fires*, 1999.

ASTM E 906, *Standard Test Method for Heat and Visible Smoke Release Rates for Materials and Products*, 1999.

ASTM E 1354, *Standard Test Method for Heat and Visible Smoke Release Rates for Materials and Products Using an Oxygen Consumption Calorimeter*, 1999.

ASTM E 1537, *Standard Test Method for Fire Testing of Upholstered Seating Furniture*, 1999.

ASTM E 1590, *Standard Test Method for Fire Testing of Mattresses*, 1999.

ASTM E 1623, *Standard Test Method for Determination of Fire and Thermal Parameters of Materials, Products, and Systems Using an Intermediate Scale Calorimeter (ICAL)*, 1999.

ASTM E 1822, *Standard Test Method for Fire Testing of Stacked Chairs*, 1999.

ASTM E 1995, *Standard Test Method for Measurement of Smoke Obscuration Using a Conical Radiant Source in a Single Closed Chamber, with the Test Specimen Oriented Horizontally*, 1998.

ISO 5659-2, *Determination of Specific Optical Density by a Single-Chamber Test*, 1994.

NFPA 255, *Standard Method of Test of Surface Burning Characteristics of Building Materials*, 2000 edition.

NFPA 265, *Standard Methods of Fire Tests for Evaluating Room Fire Growth Contribution of Textile Wall Coverings*, 1998 edition.

NFPA 266, *Standard Method of Test for Fire Characteristics of Upholstered Furniture Exposed to Flaming Ignition Source*, 1998 edition.

NFPA 267, *Standard Method of Test for Fire Characteristics of Mattresses and Bedding Assemblies Exposed to Flaming Ignition Source*, 1998 edition.

NFPA 270, *Standard Test Method for Measurement of Smoke Obscuration Using a Conical Radiant Source in a Single Closed Chamber*, 1998 edition.

NFPA 271, *Standard Method of Test for Heat and Visible Smoke Release Rates for Materials and Products Using an Oxygen Consumption Calorimeter*, 1998 edition.

NFPA 286, *Standard Methods of Fire Tests for Evaluating Contribution of Wall and Ceiling Interior Finish to Room Fire Growth*, 2000 edition.

Appendix F Selected Papers for Further Study

This appendix is not a part of the requirements of this NFPA document but is included for informational purposes only.

F.1 Selection Criteria. The following list of papers has been selected as an introduction to a much broader list of documents relating to smoke problems during building fires. In selecting these references, emphasis has been placed on U.S. and Canadian work. There is a considerable body of foreign language publications of great merit, but, with one or two exceptions, these have not been included.

F.1.1 Review Papers.

Autian, J. 1970. "Toxicology Aspects of Flammability and Combustion of Polymeric Materials." *Journal of Fire and Flammability* 2: 239-268.

Galbreath, M. 1968. "Fire in High Buildings." National Research Council of Canada, *Fire Study* 21, NRC No. 10081, Ottawa.

Little, Arthur D. 1952. "Fire Gas Research Report." *NFPA Quarterly* 45 (3): 280-306.

Wood, P. G. 1972. "The Behavior of People in Fire." Joint Fire Res. Org., *Fire Research Note No. 953*, 113.

F.1.2 Fire Gas and Smoke Hazard.

Bono, J. A., and Breed, B. K. 1966. "Smoke Ratings in Relation to Visual Observations." *Fire Technology* 2 (2): 146-158.

Fiorca, V., Higging, E. A., Thomas, A. A., and Davis, H. V. 1972. "Acute Toxicity of Brief Exposures to HF, HCl, NO_2 and HCN with and without CO." *Fire Technology* 8 (2): 120-129.

Fristrom, R. 1973. *Annual Summary Report* (July 1972 to 30 June 1973), App. Phys. Lab., Johns Hopkins Univ., Rept. No. FPP A73.

Jin, T. 1971. "Visibility through Fire Smoke (Part 2, Visibility of Monochromatic Signs through Fire Smoke)." *Report of Fire Res. Inst. of Japan* 33: 31-48.

Shern, J. H. 1967. "Smoke Contribution Factor in Fire Hazard Classification of Building Materials." *Symposium on Fire Test Methods — Restraint and Smoke* (1966), ASTM STP422, American Society for Testing and Materials.

Smith, E. E. 1973. "Evaluation of the Fire Hazard of Duct Materials." *Fire Technology* 9 (3): 157-170.

Tsuchiya, Y., and Sumi, K. 1973. "Combined Lethal Effect of Temperature CO, CO_2 and O_2 of Simulated Fire Gases." *Journal of Fire and Flammability* 4: 132-140.

Tsuchiya, Y., and Sumi, K. 1972 "Evaluation of the Toxicity of Combustion Products." *Journal of Fire and Flammability* 3: 46-50.

Yuill, C. H. 1970. "The Life Hazard of Bedding Fires." *Journal of Fire and Flammability* 1: 312-323.

F.1.3 Smoke Test Methods.

ASTM D 2843, *Standard Test Method for Density of Smoke from the Burning or Decomposition of Plastics,* 1993.

ASTM E 162, *Standard Method of Test for Surface Flammability of Materials Using a Radiant Heat Energy Source*, 1994.

Bartosic, A. J., and Rarig, F. J. 1967. "Evaluation of the XP2 Smoke Density Chamber." *Symposium on Fire Test Methods — Restraint and Smoke* (1966), ASTM STP422, American Society for Testing and Materials.

Brenden, J. J. 1971. "Usefulness of a New Method for Smoke Yield from Species and Panel Products." *Forest Products Journal* 21: 23-28.

Christian, W. J., and Waterman, T. E. 1971. "Ability of Small-Scale Tests to Predict Full-Scale Smoke Production." *Fire Technology* 7 (4): 332-344.

Comeford, J. J., and Birky, M. 1972. "A Method for the Measurement of Smoke and HCl Evolution from Poly(vinyl chloride)." *Fire Technology* 8 (2): 85-90.

Copyright National Fire Protection Association
Provided by IHS under license with NFPA
No reproduction or networking permitted without license from IHS
Not for Resale

Gross, D., Loftus, J. J., and Robertson, A. F. 1967. "Method for Measuring Smoke from Burning Materials." *Symposium on Fire Test Methods — Restraint and Smoke* (1966), ASTM STP422, American Society for Testing and Materials.

Lee, T. G. 1971. "Interlaboratory Evaluation of Smoke Density Chamber." *NBS Tech. Note 708.*

Lee, T. G. 1973. "The Smoke Density Chamber Method for Evaluating the Potential Smoke Generation of Materials." *NBS Tech. Note 757.*

NFPA 255, *Standard Method of Test of Surface Burning Characteristics of Building Materials,* 2000 edition.

Rasbash, D. J. 1967. "Smoke and Toxic Products Produced at Fires." *Trans. J. Plastics Inst.* 55-61.

Silversides, R. G. 1967. "Measurement and Control of Smoke in Building Fires." *Symposium on Fire Test Methods — Restraint and Smoke* (1966), ASTM STP422, American Society for Testing and Materials.

Smith, E. E. 1972. "Measuring Rate of Heat, Smoke, and Toxic Gas Release." *Fire Technology* 8 (3): 237-245.

F.1.4 Smoke Behavior during Fires.

Bell, D., and Lieberman, P. 1973. "Smoke and Fire Propagation in Compartment Spaces." *Fire Technology* 9 (2): 91-100.

Carhart, H., Hazlett, R. N., Johnson, E., and Stone, J. P. 1973. "The Transport of Hydrogen Chloride by Soot from Burning Polyvinylchloride." *Journal of Fire and Flammability* 4: 42-51.

Fackler, J. B. 1967. "Fire and Smoke Invasion of Apartments." *Symposium on Fire Test Methods — Restraint and Smoke* (1966), ASTM STP422, American Society for Testing and Materials.

Heselden, A., and Hinkley, P. L. 1970. "Smoke Travel in Shopping Malls — Experiments in Cooperation with Glasgow Fire Brigade." Part I, Joint Fire Res. Org., *Fire Research Note 832.* See also *Fire Research Abstracts and Reviews* 12 (3): 234.

Hinkley, P. L. 1970. "The Flow of Hot Gases along an Enclosed Shopping Mall — A Tentative Theory." Joint Fire Res. Org., *Fire Research Note 807.* See also *Fire Research Abstracts and Reviews* 12 (3): 235.

"Movement of Smoke on Escape Routes in Buildings" (Proceedings of the Symposium held at Watford College of Technology). 1971. Joint Fire Res. Org., Her Majesty's Stationery Office, London.

Shorter, G. W., et al. 1960. "The St. Lawrence Burns." *NFPA Quarterly* 53 (4): 300-316.

F.1.5 Smoke Management During Fires.

"Explanatory Paper on Control of Smoke Movement in High Buildings." *National Building Code of Canada,* Nat. Res. Council, Canada, NRC, No. 11413.

Haggerty, J. R. 1970. "A New Look at Smoke Stop Partitions." *Fire Technology* 6 (2): 111-122.

McGuire, J. H., Tamura, G. T., and Wilson, A. G. 1970. "Factors in Controlling Smoke in High Buildings." ASHRAE Symposium, *Fire Hazards in Buildings,* 8–13.

Shaw, C., and Tamura, G. 1973. "Basis for the Design of Smoke Shafts." *Fire Technology* 9 (3): 209–222.

Shern, J. H. 1966. "Smokeproof Towers in Center Core Structures." *Fire Technology* 2 (4): 303–307.

Shorter, G. W., and Wilson, A. G. 1970. "Fire and High Buildings." *Fire Technology* 6 (4): 292–304.

F.1.6 Chemical Analysis of Fire Gases.

DiPietro, J., and Stepniczka, H. 1971. "A Study of Smoke Density and Oxygen Index of Polystyrene ABS and Polyester Systems." *Journal of Fire and Flammability* 2: 36-53.

Gaskill, J. R. 1970. "Smoke Development in Polymers during Pyrolysis of Combustion." *Journal of Fire and Flammability* 1: 183-216.

Hilado, C. J. 1970. "The Effect of Chemical and Physical Factors on Smoke Evaluation from Polymers." *Journal of Fire and Flammability* 1: 217–238.

Hilado, C. J. 1969. "Smoke from Cellular Polymers." *Fire Technology* 5(2): 130–139.

Wagner, J. P. 1972. "Survey of Toxic Species in the Pyrolysis of Combustion of Polymers." *Fire Research Abstracts and Reviews* 14 (1): 1–23.

Woolley, W. D., and Wadley, A. I. 1970. "The Thermal Decomposition Products of Phenol-Formaldehyde Laminates, Part 2. The Production of Carbon Monoxide and Carbon Dioxide." Joint Fire Res. Org., *Fire Research Note 852.*

F.1.7 Smoke Production Measurements.

Gaskill, J. R., and Veith, C. R. 1968. "Smoke Opacity from Certain Woods and Plastics." *Fire Technology* 4 (3): 185–195.

Gross, D., Loftus, J. J., Lee, T. G., and Gray, V. E. 1969. "Smoke and Gases Produced by Burning Aircraft Interior Materials." *NBS Building Sciences Series,* BSS 18 U.S. Government Printing Office, Washington, D.C.

Robertson, A. F. 1973. "Tests Indicate Venting Increases Smoke Production from Some Polymerics." *Fire Engineering* 126(9): 97–98.

Copyright National Fire Protection Association
Provided by IHS under license with NFPA
No reproduction or networking permitted without license from IHS
Not for Resale

Index

©2001 National Fire Protection Association. All Rights Reserved.
The copyright in this index is separate and distinct from the copyright in the document that it indexes. The licensing provisions set forth for the document are not applicable to this index. This index may not be reproduced in whole or in part by any means without the express written permission of NFPA.

-A-

Air-propane fuel, premixed . . . . . 2.11.5 to 2.11.6
Apparatus . . . . . *see* Test apparatus

-B-

Bouguer's law of light attenuation D.2.2.2, D.2.2.4
Burner, multiple flamelet . . . . . *see* Multiple flamelet burner

-C-

Calculations . . . . . Chap. 5, D.2.2.1
Chamber . . . . . *see* Test chamber
Cleaning of equipment 4.2, A.4.2.1, A.4.2.2
Commentary on standard . . . . . App. D

-D-

Documentation . . . . . 6.1, A.6.1(7), A.6.1(9)

-F-

Fuel, premixed air-propane 2.11.5, 2.11.6
Furnace, radiant heat . . . . . *see* Radiant heat furnace
Furnace control system 2.3.4, 2.3.5, A.2.3.5

-L-

Light transmittance . . . 1.2.5, 4.5.7 to 4.5.9, A.4.5.9, D.2.2.1 to D.2.2.3; *see also* Specific optical density
Calculation of 5.3
Recording of 4.5.4

-M-

Manometer 2.10, 4.5.5
Leakage rate test B.2.3
Maximum specific optical density 1.3.5, D.5
Calculation of 5.2, D.2.2.1
Meter, readout . . . . . *see* Recorder or readout meter, portable
Molten drips, unburned A.3.4.4, D.3.4
Multiple flamelet burner 2.11
Construction B.1.7
Positioning 4.4

-P-

Photometric system 2.6, D.1.1, D.3.1
Calibration B.2.1
Cleaning of glass windows 4.2.2, A.4.2.2
Construction B.1.4
Monitoring of output 2.9.2, 4.3.10
Test procedure 4.5.3, 4.5.8
Potentiometer 2.9.2
Pressure regulator B.1.8
Products of combustion . . . . . A.6.1(7)

-R-

Radiant heat furnace 2.3, A.2.3.5
Calibration . . . . . 4.3.2 to 4.3.7, A.4.3.3
Construction B.1.1
Framework for support of 2.5, B.1.3
Warm-up of 4.3
Radiometer 2.7, A.2.7.1
Calibration 4.3.7, B.2.2
Construction B.1.5
Monitoring of output 2.9.1, 4.3.8
Recorder or readout meter, portable . . . . . 2.9, 4.3.8 to 4.3.11
Test procedure 4.5.4
Referenced publications . . . . . App. E
Report . . . . . 4.5.6, Chap. 6, A.6, D.5
Form . . . . . App. C

-S-

Scope of practice 1.1, A.1.1.3
Significance of practice 1.2, A.1.2.1
Smoke density chamber . . . . . *see* Test chamber
Smoke generating materials, standard B.2.4
Smoke measurement data . . . . . *see also* Maximum specific optical density; Specific optical density
Limitations on application of D.6
Types A.1.3.5
Specific optical density . . . . . 1.1.3, 1.2.1, A.1.1.3; *see also* Maximum specific optical density
Calculation of . . . . . 5.1 to 5.2, D.2.2.1
Sensitivity to specimen placement D.3.2
Used as measurement . . . . . 1.3.5, A.1.3.5, D.1.1, D.2.2.1 to D.2.2.4
Specimen holder 2.4
Cleaning A.4.2.1
Construction B.1.2
Framework for support of 2.5, B.1.3
Placement of "blank" holder 4.3.4, 4.3.5, 4.3.8, 4.4, 4.5.9
Test procedure 4.5.2
Specimens . . . . . Chap. 3, A.3
Assembly 3.1.3, A.3.1.3.1, A.3.1.3.3
Conditioning 3.3
Description 3.1
Mounting 3.4
Number of 3.2
Orientation 3.1.2
Size 3.1.1
Unburned molten drips . . . . . A..3.4.4, D.3.4

-T-

Termination of test 6.2
Test apparatus . . . . . Chap. 2, A.2
Calibration . . . . . 4.3.2 to 4.3.7, A.4.3.3, B.2
Construction B.1
Test chamber . . . . . Figs. 2.1(a) and (b), 2.2, A.2.2.2, D.1.1, D.6.3
Flushing 4.5
Leakage, measurement of 2.10, B.2.3
Pressure measurements 2.10, 4.5.5
Report . . . . . *see* Report
Wall cleaning 4.2.1
Wall temperature, determining 2.8

Copyright National Fire Protection Association
Provided by IHS under license with NFPA
No reproduction or networking permitted without license from IHS
Not for Resale

Test method
Factors influencing D.3
Features of D.2
Precision D.4
Scope 1.1, A.1.1.3
Significance 1.2, A.1.2.1
Summary 1.3, A.1.3.5
Test procedure . . . . . Chap. 4, A.4
Test room 4.1
Test specimens . . . . . *see* Specimens
Thermocouples 2.8
Construction B.1.6
Monitoring of output 2.9.1

--`,,,,-`-`,,`,,`,`,,`---
Copyright National Fire Protection Association
Provided by IHS under license with NFPA
No reproduction or networking permitted without license from IHS
Not for Resale