NFPA 257

Standard on Fire Test for Window and Glass Block Assemblies

2007 Edition

NFPA, 1 Batterymarch Park, Quincy, MA 02169-7471
An International Codes and Standards Organization

Copyright National Fire Protection Association
Provided by IHS under license with NFPA
No reproduction or networking permitted without license from IHS

Not for Resale

IMPORTANT NOTICES AND DISCLAIMERS CONCERNING NFPA DOCUMENTS

NOTICE AND DISCLAIMER OF LIABILITY CONCERNING THE USE OF NFPA DOCUMENTS

NFPA codes, standards, recommended practices, and guides, of which the document contained herein is one, are developed through a consensus standards development process approved by the American National Standards Institute. This process brings together volunteers representing varied viewpoints and interests to achieve consensus on fire and other safety issues. While the NFPA administers the process and establishes rules to promote fairness in the development of consensus, it does not independently test, evaluate, or verify the accuracy of any information or the soundness of any judgments contained in its codes and standards.

The NFPA disclaims liability for any personal injury, property or other damages of any nature whatsoever, whether special, indirect, consequential or compensatory, directly or indirectly resulting from the publication, use of, or reliance on this document. The NFPA also makes no guaranty or warranty as to the accuracy or completeness of any information published herein.

In issuing and making this document available, the NFPA is not undertaking to render professional or other services for or on behalf of any person or entity. Nor is the NFPA undertaking to perform any duty owed by any person or entity to someone else. Anyone using this document should rely on his or her own independent judgment or, as appropriate, seek the advice of a competent professional in determining the exercise of reasonable care in any given circumstances.

The NFPA has no power, nor does it undertake, to police or enforce compliance with the contents of this document. Nor does the NFPA list, certify, test or inspect products, designs, or installations for compliance with this document. Any certification or other statement of compliance with the requirements of this document shall not be attributable to the NFPA and is solely the responsibility of the certifier or maker of the statement.

Copyright National Fire Protection Association
Provided by IHS under license with NFPA
No reproduction or networking permitted without license from IHS
Not for Resale

ADDITIONAL NOTICES AND DISCLAIMERS

Updating of NFPA Documents

Users of NFPA codes, standards, recommended practices, and guides should be aware that these documents may be superseded at any time by the issuance of new editions or may be amended from time to time through the issuance of Tentative Interim Amendments. An official NFPA document at any point in time consists of the current edition of the document together with any Tentative Interim Amendments and any Errata then in effect. In order to determine whether a given document is the current edition and whether it has been amended through the issuance of Tentative Interim Amendments or corrected through the issuance of Errata, consult appropriate NFPA publications such as the National Fire Codes® Subscription Service, visit the NFPA website at www.nfpa.org, or contact the NFPA at the address listed below.

Interpretations of NFPA Documents

A statement, written or oral, that is not processed in accordance with Section 6 of the Regulations Governing Committee Projects shall not be considered the official position of NFPA or any of its Committees and shall not be considered to be, nor be relied upon as, a Formal Interpretation.

Patents

The NFPA does not take any position with respect to the validity of any patent rights asserted in connection with any items which are mentioned in or are the subject of NFPA codes, standards, recommended practices, and guides, and the NFPA disclaims liability for the infringement of any patent resulting from the use of or reliance on these documents. Users of these documents are expressly advised that determination of the validity of any such patent rights, and the risk of infringement of such rights, is entirely their own responsibility.

NFPA adheres to applicable policies of the American National Standards Institute with respect to patents. For further information contact the NFPA at the address listed below.

Law and Regulations

Users of these documents should consult applicable federal, state, and local laws and regulations. NFPA does not, by the publication of its codes, standards, recommended practices, and guides, intend to urge action that is not in compliance with applicable laws, and these documents may not be construed as doing so.

Copyrights

This document is copyrighted by the NFPA. It is made available for a wide variety of both public and private uses. These include both use, by reference, in laws and regulations, and use in private self-regulation, standardization, and the promotion of safe practices and methods. By making this document available for use and adoption by public authorities and private users, the NFPA does not waive any rights in copyright to this document.

Use of NFPA documents for regulatory purposes should be accomplished through adoption by reference. The term "adoption by reference" means the citing of title, edition, and publishing information only. Any deletions, additions, and changes desired by the adopting authority should be noted separately in the adopting instrument. In order to assist NFPA in following the uses made of its documents, adopting authorities are requested to notify the NFPA (Attention: Secretary, Standards Council) in writing of such use. For technical assistance and questions concerning adoption of NFPA documents, contact NFPA at the address below.

For Further Information

All questions or other communications relating to NFPA codes, standards, recommended practices, and guides and all requests for information on NFPA procedures governing its codes and standards development process, including information on the procedures for requesting Formal Interpretations, for proposing Tentative Interim Amendments, and for proposing revisions to NFPA documents during regular revision cycles, should be sent to NFPA headquarters, addressed to the attention of the Secretary, Standards Council, NFPA, 1 Batterymarch Park, P.O. Box 9101, Quincy, MA 02269-9101.

For more information about NFPA, visit the NFPA website at www.nfpa.org.

--`,,```,,,,````-`-`,,`,,`,`,,`---

Copyright National Fire Protection Association
Provided by IHS under license with NFPA
No reproduction or networking permitted without license from IHS

Not for Resale

Copyright © 2006 National Fire Protection Association. All Rights Reserved.

NFPA 257

Standard on

Fire Test for Window and Glass Block Assemblies

2007 Edition

This edition of NFPA 257, *Standard on Fire Test for Window and Glass Block Assemblies*, was prepared by the Technical Committee on Fire Tests. It was issued by the Standards Council on July 28, 2006, with an effective date of August 17, 2006, and supersedes all previous editions.

This edition of NFPA 257 was approved as an American National Standard on August 17, 2006.

Origin and Development of NFPA 257

This standard was tentatively adopted by NFPA in 1969 and officially adopted in 1970. Subsequent revisions were released in 1975, 1980, 1985, and 1990.

The 1996 edition of NFPA 257 was a complete rewrite that included editorial and technical revisions. Many of the editorial and technical revisions were made to parallel those of NFPA 252, *Standard Methods of Fire Tests of Door Assemblies*. The technical revisions included modifications to the furnace pressure. The neutral pressure was eliminated so that the test assembly could be tested to the pressure required by other code requirements (i.e., NFPA *101*®, *Life Safety Code*®, and the model building codes). In addition, the duration of the test method was extended beyond the 45 minutes required in previous editions to allow for the testing of new glazing materials.

The 2000 edition was completely revised for the purposes of consistency and editorial reformatting. This document was modified so that the test protocols and equipment used would be more consistent with the provisions found in NFPA 251, *Standard Method of Tests of Fire Endurance of Building Construction and Materials*, and NFPA 252, *Standard Method of Fire Tests of Door Assemblies*. This revision recognized the positive pressure testing required by some of the model building codes. It also provided greater clarification on how to conduct the hose stream test to achieve greater repeatability and reproducibility.

The 2007 edition is a complete revision for compliance with the *Manual of Style for NFPA Technical Committee Documents*. It also contains revisions to its scope and purpose provisions to clarify the committee's intent, and it contains a new reference to ASTM E 2226, *Standard Practice for Application of Hose Stream,* for details on conducting the hose stream test.

--`,,```,,,,````-`-`,,`,,`,`,,`---

Copyright National Fire Protection Association
Provided by IHS under license with NFPA
No reproduction or networking permitted without license from IHS
Not for Resale

Technical Committee on Fire Tests

William E. Fitch, *Chair*
Phyrefish Enterprises, Incorporated, FL [SE]

Barry L. Badders, Jr., Southwest Research Institute, TX [RT]
Jesse J. Beitel, Hughes Associates, Incorporated, MD [SE]
April L. Berkol, Starwood Hotels & Resorts Worldwide, Incorporated, NY [U]
Rep. American Hotel & Lodging Association
Robert G. Bill, Jr., FM Global, MA [I]
John A. Blair, The DuPont Company, DE [M]
Rep. Society of the Plastics Industry, Incorporated
Gordon H. Damant, Inter-City Testing & Consulting Corporation of California, CA [SE]
Thomas W. Fritz, Armstrong World Industries, Incorporated, PA [M]
Pravinray D. Gandhi, Underwriters Laboratories Incorporated, IL [RT]
Gordon E. Hartzell, Hartzell Consulting, Incorporated, TX [SE]
Marcelo M. Hirschler, GBH International, CA [SE]
Alfred J. Hogan, Reedy Creek Improvement District, FL [E]
Rep. International Fire Marshals Association
William E. Koffel, Koffel Associates, Incorporated, MD [SE]
James R. Lawson, U.S. National Institute of Standards and Technology, MD [RT]
Rodney A. McPhee, Canadian Wood Council, Canada [M]
Frederick W. Mowrer, University of Maryland, MD [SE]
David T. Sheppard, U.S. Department of Justice, MD [RT]
Kuma Sumathipala, American Forest & Paper Association, DC [M]
T. Hugh Talley, Hugh Talley Company, TN [M]
Rep. Upholstered Furniture Action Council
Rick Thornberry, The Code Consortium, Incorporated, CA [SE]
William A. Webb, Schirmer Engineering Corporation, IL [I]
Robert A. Wessel, Gypsum Association, DC [M]
Robert J. Wills, American Iron and Steel Institute, AL [M]

Alternates

Robert M. Berhinig, Underwriters Laboratories Incorporated, IL [RT]
(Alt. to P. D. Gandhi)
Delbert F. Boring, Jr., American Iron and Steel Institute, OH [M]
(Alt. to R. J. Wills)
Richard J. Davis, FM Global, MA [I]
(Alt. to R. G. Bill, Jr.)
Sam W. Francis, American Forest & Paper Association, PA [M]
(Alt. to K. Sumathipala)
Richard G. Gann, U.S. National Institute of Standards and Technology, MD [RT]
(Alt. to J. R. Lawson)
Paul A. Hough, Armstrong World Industries, Incorporated, PA [M]
(Alt. to T. W. Fritz)
Marc L. Janssens, Southwest Research Institute, TX [RT]
(Alt. to B. L. Badders, Jr.)
James K. Lathrop, Koffel Associates, Incorporated, CT [SE]
(Alt. to W. E. Koffel)
James A. Milke, University of Maryland, MD [SE]
(Alt. to F. W. Mowrer)
Arthur J. Parker, Hughes Associates, Incorporated, MD [SE]
(Alt. to J. J. Beitel)
Ineke Van Zeeland, Canadian Wood Council, Canada [M]
(Alt. to R. A. McPhee)
Joe Ziolkowski, American Furniture Manufacturers Association, NC [M]
(Alt. to T. H. Talley)

Nonvoting

Robert H. Barker, American Fiber Manufacturers Association, VA [M]
Rep. American Fiber Manufacturers Association
Rohit Khanna, U.S. Consumer Product Safety Commission, MD [C]

Milosh T. Puchovsky, NFPA Staff Liaison

This list represents the membership at the time the Committee was balloted on the final text of this edition. Since that time, changes in the membership may have occurred. A key to classifications is found at the back of the document.

NOTE: Membership on a committee shall not in and of itself constitute an endorsement of the Association or any document developed by the committee on which the member serves.

Committee Scope: This Committee shall have primary responsibility for documents on fire testing procedures, for reviewing existing fire test standards and recommending appropriate action to NFPA, for recommending the application of and advising on the interpretation of acceptable test standards for fire problems of concern to NFPA technical committees and members, and for acting in a liaison capacity between NFPA and the committees of other organizations writing fire test standards. This Committee does not cover fire tests that are used to evaluate extinguishing agents, devices, or systems.

--`,,```,,,,````-`-`,,`,,`,`,,`---
Copyright National Fire Protection Association
Provided by IHS under license with NFPA
No reproduction or networking permitted without license from IHS
Not for Resale

Contents

Chapter 1 Administration **257–** 4
1.1 Scope **257–** 4
1.2 Purpose **257–** 4
1.3 Units **257–** 4

Chapter 2 Referenced Publications **257–** 4
2.1 General **257–** 4
2.2 NFPA Publications. (Reserved) **257–** 4
2.3 Other Publications **257–** 4
2.4 References for Extracts in Mandatory Sections **257–** 4

Chapter 3 Definitions **257–** 4
3.1 General **257–** 4
3.2 NFPA Official Definitions **257–** 5
3.3 General Definitions **257–** 5

Chapter 4 Control of Fire Test **257–** 5
4.1 Temperature–Time Curve **257–** 5
4.2 Furnace Temperatures **257–** 5
4.3 Furnace Pressure **257–** 5

Chapter 5 Fire Window Assembly **257–** 6
5.1 Construction and Size **257–** 6
5.2 Mounting **257–** 6
5.3 Test Wall **257–** 6

Chapter 6 Conduct of Tests **257–** 7
6.1 Fire Test **257–** 7
6.2 Hose Stream Test **257–** 7

Chapter 7 Performance Criteria **257–** 7
7.1 Fire Test **257–** 7
7.2 Hose Stream Test **257–** 7

Chapter 8 Report **257–** 7
8.1 Results **257–** 7

Annex A Explanatory Material **257–** 8

Annex B Background and Development **257–** 9

Annex C Radiant and Total Heat Flux **257–**11

Annex D Informational References **257–**12

Index **257–**13

Copyright National Fire Protection Association
Provided by IHS under license with NFPA
No reproduction or networking permitted without license from IHS
Not for Resale

NFPA 257

Standard on

Fire Test for Window and Glass Block Assemblies

2007 Edition

IMPORTANT NOTE: This NFPA document is made available for use subject to important notices and legal disclaimers. These notices and disclaimers appear in all publications containing this document and may be found under the heading "Important Notices and Disclaimers Concerning NFPA Documents." They can also be obtained on request from NFPA or viewed at www.nfpa.org/disclaimers.

NOTICE: An asterisk (*) following the number or letter designating a paragraph indicates that explanatory material on the paragraph can be found in Annex A.

A reference in brackets [ ] following a section or paragraph indicates material that has been extracted from another NFPA document. As an aid to the user, the complete title and edition of the source documents for extracts in mandatory sections of the document are given in Chapter 2 and those for extracts in informational sections are given in Annex D. Editorial changes to extracted material consist of revising references to an appropriate division in this document or the inclusion of the document number with the division number when the reference is to the original document. Requests for interpretations or revisions of extracted text shall be sent to the technical committee responsible for the source document.

Information on referenced publications can be found in Chapter 2 and Annex D.

Chapter 1 Administration

1.1 Scope.

1.1.1 This standard prescribes standardized fire and hose stream test procedures that apply to the evaluation of fire window assemblies, including windows, glass block, and other light-transmitting assemblies intended to retard the spread of fire through openings in fire resistance–rated walls.

1.1.2 This standard is not to be construed as determining the suitability of fire window assemblies for continued use after fire exposure.

1.1.3 This standard provides a standardized method for comparing the performance of fire window assemblies.

1.2* Purpose.

1.2.1 This standard prescribes specific standardized fire and hose stream test procedures for determining the fire protection rating of window assemblies, glass block, and other light-transmitting assemblies used in openings in fire resistance–rated walls.

1.2.2 This standard provides a means for evaluating the ability of a window, glass block, or other light-transmitting assemblies to remain in a wall opening during a prescribed fire test exposure, followed by the application of a hose stream.

1.2.3 Tests made in conformity with this standard register performance and develop data that enable regulatory bodies to determine the suitability of fire window assemblies for use in wall openings where fire protection ratings are required.

1.2.4* The tests described herein expose a specimen to a standard fire exposure that is controlled to achieve specified temperatures throughout a specified time period, which then is followed by the application of a specified standard hose stream.

1.2.5 Variations from or change in the construction or conditions of the window assembly as tested can affect the performance characteristics of the fire window assembly.

1.2.6 The standard permits through-openings created by cracking, separation, or loss of glazing material, provided such openings do not exceed specified limits.

1.2.7 This standard does not provide the following:

(1) Full information regarding the performance of a specific fire window assembly where installed in walls constructed of materials other than those tested
(2) Evaluation of the degree to which the fire window assembly contributes to the fire hazard by generation of heat and other products of combustion
(3) Measurement of the fire window assembly's ability to control or limit the passage of smoke through the assembly

1.3 Units. The U.S. customary unit value for a measurement and the International System of Units (SI) value given in parenthesis is acceptable for use as the primary units for satisfying the requirements of this standard.

Chapter 2 Referenced Publications

2.1 General. The documents or portions thereof listed in this chapter are referenced within this standard and shall be considered part of the requirements of this document.

2.2 NFPA Publications. (Reserved)

2.3 Other Publications.

2.3.1 ASTM Publications. ASTM International, 100 Bar Harbor Drive, P.O. Box C700, West Conshohocken, PA 19428-2959.

ASTM E 2226, *Standard Practice for Application of Hose Stream,* 2002.

2.3.2 Other Publications.

Merriam-Webster's Collegiate Dictionary, 11th edition, Merriam-Webster, Inc., Springfield, MA, 2003.

2.4 References for Extracts in Mandatory Sections.

NFPA 80, *Standard for Fire Doors and Other Opening Protectives,* 2007 edition.

Chapter 3 Definitions

3.1 General. The definitions contained in this chapter shall apply to the terms used in this standard. Where terms are not defined in this chapter or within another chapter, they shall be defined using their ordinarily accepted meanings within the context in which they are used. *Merriam-Webster's Collegiate Dictionary,* 11th edition, shall be the source for the ordinarily accepted meaning.

Copyright National Fire Protection Association
Provided by IHS under license with NFPA
No reproduction or networking permitted without license from IHS
Not for Resale

3.2 NFPA Official Definitions.

3.2.1 Shall. Indicates a mandatory requirement.

3.2.2 Should. Indicates a recommendation or that which is advised but not required.

3.2.3 Standard. A document, the main text of which contains only mandatory provisions using the word "shall" to indicate requirements and which is in a form generally suitable for mandatory reference by another standard or code or for adoption into law. Nonmandatory provisions shall be located in an appendix or annex, footnote, or fine-print note and are not to be considered a part of the requirements of a standard.

3.3 General Definitions.

3.3.1 Assembly.

3.3.1.1* ***Fire Window Assembly.*** A window or glass block assembly having a fire protection rating. [**80,** 2007]

3.3.1.2 ***Glass Block Assembly.*** A light-transmitting assembly constructed of glass block held together with mortar or other suitable materials.

3.3.1.3* ***Window Assembly.*** An integral, fabricated unit that contains a glazed light(s) placed in an opening in a wall and that is intended primarily for the transmission of light or of light and air and not primarily for human entrance or exit.

3.3.2 Fire Window Assembly. See 3.3.1.1.

3.3.3 Glass Block Assembly. See 3.3.1.2.

3.3.4 Glazed Light. A pane of glazing material that is separated by muntins and mullions from adjacent panes of glazing material in a fire window assembly.

3.3.5* Glazing Material. A transparent or translucent material used in fire door assemblies and fire windows. [**80,** 2007]

3.3.6 Opening. For the purpose of this standard, a through-hole in the fire window assembly that can be seen from the unexposed side while looking through the plane of the assembly from a perpendicular position.

3.3.7 Window Assembly. See 3.3.1.3.

Chapter 4 Control of Fire Test

4.1 Temperature–Time Curve.

4.1.1 The temperature inside the furnace to which the test assemblies are exposed during the fire test shall be controlled to conform to the standard temperature–time curve shown in Figure 4.1.1 for the duration of the fire test, with the points that determine the curve specified beneath the graph in Figure 4.1.1.

4.1.2 At the start of the fire test, the temperature inside the furnace shall be ambient.

4.2 Furnace Temperatures.

4.2.1 The temperature of the furnace shall be determined by the average temperature obtained from the readings of not less than nine thermocouples symmetrically disposed and distributed within the furnace to measure the temperature near all parts of the fire window assembly.

4.2.1.1 The thermocouples shall be protected by sealed porcelain tubes with a ¾ in. (19 mm) outside diameter and a ⅛ in. (3 mm) wall thickness.

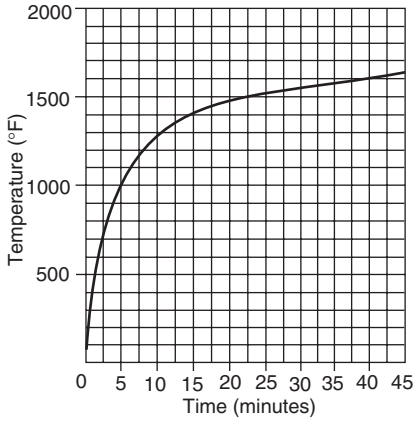

1000°F (583°C) ..... at 5 minutes
1300°F (704°C) ..... at 10 minutes
1399°F (760°C) ..... at 15 minutes
1462°F (795°C) ..... at 20 minutes
1510°F (821°C) ..... at 25 minutes
1550°F (843°C) ..... at 30 minutes
1584°F (868°C) ..... at 35 minutes
1613°F (878°C) ..... at 40 minutes
1638°F (892°C) ..... at 45 minutes
1700°F (927°C) ..... at 1 hour
1792°F (978°C) ..... 1½ hours
1925°F (1052°C) ..... at 3 hours

FIGURE 4.1.1 Temperature–Time Curve.

4.2.1.2 Base-metal thermocouples shall be protected by one of the following:

(1) Sealed ½ in. (13 mm) nominal diameter wrought-steel or wrought-iron pipe of standard weight
(2) Enclosure in protective tubes of materials and dimensions such that the time constant of the protected thermocouple assembly is 5 minutes to 7.2 minutes

4.2.1.3 The exposed length of the thermocouple protection tube in the furnace chamber shall be not less than 12 in. (305 mm).

4.2.1.4 The junction of the thermocouples shall be 6 in. (152 mm) from the exposed face of the fire window assembly or from the test wall in which the assembly is installed.

4.2.2 The furnace temperature shall be measured and recorded during the fire test at intervals not exceeding 1 minute.

4.2.3 The furnace temperature shall be controlled so that the area under the temperature–time curve, obtained by averaging the results from the temperature readings specified in 4.2.1, is as follows:

(1) Within 10 percent of the corresponding area under the standard temperature–time curve shown in Figure 4.1.1 for fire tests of 1 hour or less
(2) Within 7.5 percent of the corresponding area under the standard temperature–time curve for tests longer than 1 hour but not longer than 2 hours
(3) Within 5 percent of the corresponding area under the standard temperature–time curve for tests longer than 2 hours

4.3 Furnace Pressure.

4.3.1 Vertical Pressure. The vertical pressure distribution within the furnace shall be measured and controlled in accordance with 4.3.1.1 through 4.3.1.6.

Copyright National Fire Protection Association
Provided by IHS under license with NFPA
No reproduction or networking permitted without license from IHS
Not for Resale

4.3.1.1 The vertical pressure distribution within the furnace shall be measured by at least two pressure-sensing probes separated by a minimum vertical distance of 6 ft (1830 mm) inside the furnace.

4.3.1.2 The pressure-sensing probes shall be as shown in either Figure 4.3.1.2(a) or Figure 4.3.1.2(b).

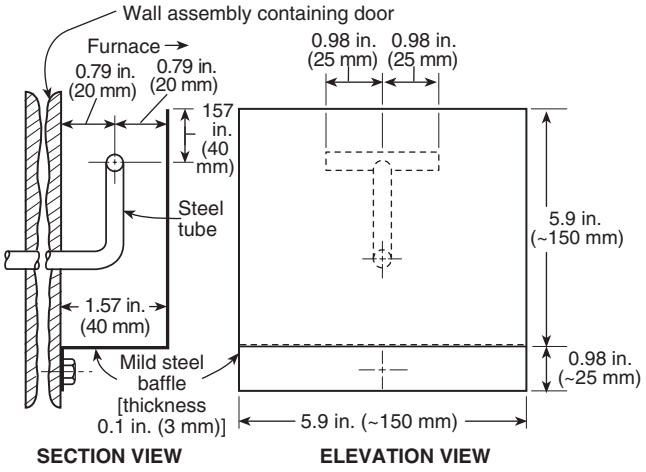

FIGURE 4.3.1.2(a) Static Pressure-Measuring Device Dimensions.

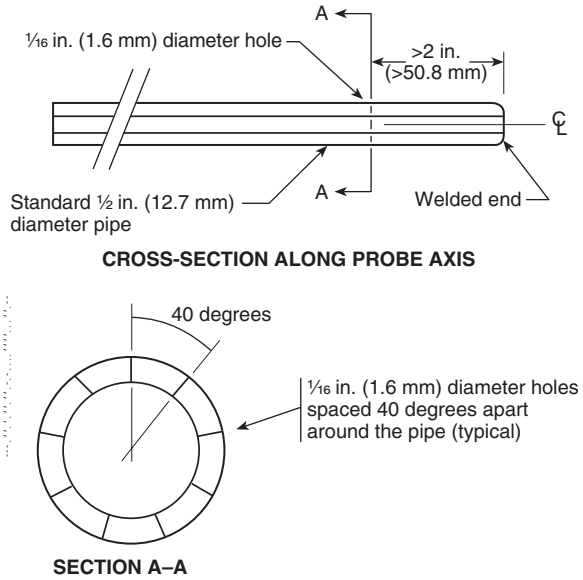

FIGURE 4.3.1.2(b) Pressure Probe.

4.3.1.3 The pressure-sensing probes shall be located within 6 in. (152 mm) of the vertical centerline of the furnace opening.

4.3.1.4 The pressure at each location shall be measured using a differential pressure instrument capable of reading in increments no larger than 0.01 in. wg (2.5 Pa) with a precision of not more than ± 0.005 in. wg (± 1.25 Pa).

4.3.1.5 The differential pressure measurement instrument shall be located so as to minimize stack effects caused by vertical runs of pressure tubing between the pressure-sensing probes and the differential pressure measurement instrument locations.

4.3.1.6 Based on the vertical separation and pressure differences between the two pressure-sensing probes, a calculation of the neutral plane [0 (zero) differential pressure] location shall be made.

4.3.2 Maintenance of Pressure. Control of the furnace pressure shall be established beginning no later than 5 minutes after the start of the test and shall be maintained throughout the remainder of the fire test period.

4.3.3 Positive Pressure. Where the fire test is to be conducted under positive pressure, the neutral pressure plane in the furnace shall be established such that at least two-thirds of the height of the fire window assembly is located above the neutral pressure plane.

4.3.4 Neutral Pressure. Where the fire test is to be conducted such that the furnace pressure is as close to neutral as possible, the neutral pressure plane shall be established at the top of the fire window assembly ± 1 in. (± 25 mm).

4.3.5 Measurement of Pressure. The furnace pressure shall be measured and recorded throughout the fire test period at intervals not exceeding 1 minute.

Chapter 5 Fire Window Assembly

5.1 Construction and Size.

5.1.1 The design, construction, material, workmanship, hardware, and size of the fire window assembly shall represent those for which a fire protection rating is desired.

5.1.2 A record of materials and construction details shall be kept for the purpose of identification.

5.1.3 The area of the fire window assembly shall be not less than 100 ft^2 (9.3 m^2), with no dimension less than 9 ft (2745 mm).

5.1.4 When the conditions of use limit the construction to smaller dimensions, a proportionate reduction shall be permitted to be made in the dimensions of the tests used to qualify the fire window assemblies for such restricted use.

5.2 Mounting.

5.2.1 The fire window assembly shall be installed in the wall or partition construction in the manner in which it is to be used.

5.2.2 The fire window assembly shall be mounted so that the latches and fasteners, other than hinges, are on the unexposed side, and the mounting shall not prevent the free, unrestricted operation of all operable components such as ventilators and sashes.

5.3 Test Wall.

5.3.1 The test wall or partition in which the fire window assembly is mounted and tested shall have the strength and fire resistance to retain the assembly throughout the fire and hose stream tests.

5.3.2 The wall or partition shall be constructed of materials representative of the wall or partition construction in which the fire window assembly is intended to be installed.

Copyright National Fire Protection Association
Provided by IHS under license with NFPA
No reproduction or networking permitted without license from IHS
Not for Resale

Chapter 6 Conduct of Tests

6.1 Fire Test.

6.1.1 Duration. The test shall be conducted until the desired fire protection rating period is reached or until failure to meet any of the performance criteria specified in Chapter 7 occurs.

6.1.2 Furnace Heat Flux. Where required, procedures for measuring the total heat flux (convective and radiative) and the radiative heat flux within the furnace shall be provided. *(See Annex C.)*

6.1.3 Unexposed Surface Radiation. Where required, procedures for measuring the radiant heat flux from the unexposed face of the fire window assembly shall be provided. *(See Annex C.)*

6.2 Hose Stream Test.

6.2.1 Within 2 minutes of completion of the fire test, the fire-exposed side of the fire window assembly shall be subjected to the impact, erosion, and cooling effects of a standard hose stream.

6.2.2 The test equipment and the test procedures for conduction the hose stream test shall be as described in ASTM E 2226, *Standard Practice for Application of Hose Stream.*

6.2.3 The minimum water pressure at the base of the play pipe during the hose stream test shall be as specified in Table 6.2.3.

Table 6.2.3 Water Pressure at Base of Play Pipe and Duration of Application for Hose Stream

	Water Pressure at Base of Play Pipe		Duration of Application for Exposed Area	
Desired Rating	**psi**	**kPa**	**sec/ft^2**	**sec/m^2**
≥3 hours	45	310	3	32
≥1½ hours and <3 hours	30	207	1.5	16
≥1 hour and <1½ hours	30	207	0.9	10
<1 hour	30	207	0.6	6

6.2.4* The hose stream shall be applied over the exposed area of the fire window assembly in accordance with the criteria specified in Table 6.2.3.

6.2.5 The exposed area of the fire window assembly shall be calculated using the outside dimensions of the fire window assembly, including the frames.

Chapter 7 Performance Criteria

7.1 Fire Test.

7.1.1 Window Assemblies. During the fire test, a window assembly shall meet the performance criteria specified in 7.1.1.1 through 7.1.1.6.

7.1.1.1 The window assembly shall remain in the wall in which it is installed for the duration of the fire test.

7.1.1.2 No flaming shall occur on the unexposed surface of the assembly.

7.1.1.3 There shall be no separation of the glazing material edges from the glazing frame that creates openings.

7.1.1.4 At the perimeter of operable components, movement from the initial closed position shall not exceed the thickness of the frame member at any point.

7.1.1.5 The window assembly shall not move away from the wall to the extent that an opening is created.

7.1.1.6 There shall be no openings in the window assembly.

7.1.2 Glass Block Assemblies. During the fire test, a glass block assembly shall meet the performance criteria specified in 7.1.2.1 through 7.1.2.4.

7.1.2.1 The glass block assembly shall remain in the frame in which it is installed for the duration of the fire test.

7.1.2.2 No flaming shall occur on the unexposed surface of the assembly.

7.1.2.3 There shall be no openings in any of the individual glass blocks.

7.1.2.4 No openings shall be produced during the test in the joints between individual glass blocks or between glass blocks and the frame in which the glass block assembly is installed.

7.2 Hose Stream Test.

7.2.1 Window Assemblies. During the hose stream test, a window assembly shall meet the performance criteria specified in 7.2.1.1 through 7.2.1.4.

7.2.1.1 The window assembly shall remain in the wall in which it is installed for the duration of the hose stream test.

7.2.1.2 At the perimeter of operable components, movement from the initial closed position shall not exceed the thickness of the frame member at any point.

7.2.1.3 Openings created by separation of the glazing material edges from the glazing frame due to movement away from the frame shall not exceed 30 percent of each individual glazed light perimeter.

7.2.1.4 Openings created by glazing material breakage in the central area of each individual glazed light shall not exceed 5 percent of the area of the glazed light.

7.2.2 Glass Block Assemblies. During the hose stream test, a glass block assembly shall meet the performance criteria specified in 7.2.2.1 and 7.2.2.2.

7.2.2.1 The glass block assembly shall remain in the frame in which it is installed for the duration of the fire test.

7.2.2.2 At least 70 percent of the glass blocks shall not develop openings.

Chapter 8 Report

8.1 Results.

8.1.1 General.

8.1.1.1 Results of the performance of a fire window assembly subjected to the fire exposure tests as prescribed in these test methods shall be reported.

8.1.1.2 The report shall include, but shall not be limited to, the information specified in 8.1.2 through 8.1.14.

Copyright National Fire Protection Association
Provided by IHS under license with NFPA
No reproduction or networking permitted without license from IHS
Not for Resale

8.1.2 The construction details and materials used to construct the test wall or partition in which the fire window assembly is mounted for testing shall be described.

8.1.3 The temperature measurements of the furnace shall be plotted on a comparative graph showing the standard temperature–time curve.

8.1.4 All observations of the reactions of the fire window assembly that have an influence on its performance during both the fire and hose stream tests shall be reported.

8.1.5 The fire window assembly, including the appearance of fasteners and attachments following both the fire and hose stream tests, shall be described.

8.1.6 The amount and nature of the movement of any operable components from the initial closed position shall be given.

8.1.7 For window assemblies, the condition of the individual glazed lights, including movement of the edges, and the percentage and location of glazing material fragments dislodged during the tests shall be reported.

8.1.8 For glass block assemblies, any loosening of the blocks in the frame and any through-openings, including their location, shall be described.

8.1.9 The following information shall be provided to ensure positive identification and duplication of the fire window assembly in all respects:

(1) Materials and construction of the fire window assembly
(2) Details of installation, including frames, latches, hinges, and fasteners used for mounting
(3) Size of the glazed area

8.1.10 Pressure differential measurements made between the furnace and the unexposed side of the fire window assembly, and the calculation that determines the position of the neutral plane with respect to the bottom of the fire window assembly during the fire test, shall be reported.

8.1.11 The actual duration of the fire test shall be given.

8.1.11.1 The fire protection rating of the fire window assembly that successfully meets the performance criteria specified in Chapter 7 also shall be reported.

8.1.11.2 One of the following fire protection ratings shall be assigned based on, but not more than, the duration of the fire test:

(1) 20 minutes
(2) 30 minutes
(3) ¾ hour
(4) 1 hour
(5) 1½ hours
(6) 2 hours
(7) 3 hours
(8) Hourly increments for ratings over 3 hours

8.1.12 Where the fire protection rating is 30 minutes or longer, a correction shall be applied as follows for variation of the furnace exposure time from that prescribed in 4.2.3 in cases when exposure time affects the fire protection rating:

(1) The test duration shall be multiplied by two-thirds of the difference in area between the curve of the average furnace temperature and the standard temperature–time curve for the first three-quarters of the test duration.
(2) The product then shall be divided by the difference in area between the standard temperature–time curve and a baseline of 68°F (20°C) for the same portion of the test, increasing the latter area by 54°F/hr (30°C/hr) [3240°F/min (1800°C/min)], to compensate for the thermal lag of the furnace thermocouples during the first part of the test.
(3) For fire test exposures higher than the standard temperature–time curve, the indicated fire protection rating shall be increased by the amount of the correction and shall be decreased similarly for fire exposure below the standard temperature–time curve.
(4) The correction shall be expressed by the following formula:

$$C = \frac{2I(A - A_S)}{3(A_S + L)}$$

where:
C = correction in the same units as I
I = indicated fire protection rating
A = area under the curve of the indicated average furnace temperature for the first three-quarters of the indicated rating period
A_S = area under the standard temperature–time curve for the same part of the indicated fire protection rating
L = lag correction in the same units as A and A_S *[54°F/hr (30°C/hr)] [3240°F/min (1800°C/min)]*

8.1.13 The results of the hose stream test shall be reported.

8.1.14 The fire window assembly, including the appearance of fasteners, attachments, and other hardware, following both the fire and hose stream tests shall be described.

Annex A Explanatory Material

Annex A is not a part of the requirements of this NFPA document but is included for informational purposes only. This annex contains explanatory material, numbered to correspond with the applicable text paragraphs.

A.1.2 The degree of fire protection measured in units of time is not an absolute value, since all possible actual fire scenarios are not represented by the standard fire exposure described herein. This standard allows different fire window assemblies to be compared with each other to evaluate their relative performance as measured against a standard fire exposure.

A.1.2.4 The fire exposure is not necessarily representative of all fire conditions, due to varying changes in the amount, nature, and distribution of fire loading, ventilation, compartment size and configuration, and heat sink characteristics of the compartment. The fire exposure does, however, provide a relative measure of the fire performance of fire window assemblies under these specified fire exposure conditions. Similarly, the hose stream exposure is not necessarily representative of all applications of actual hose streams used by a fire department during fire suppression efforts. The degree of fire protection measured in units of time is not an absolute value, since all possible actual fire scenarios are not represented by the standard fire exposure described herein.

A.3.3.1.1 Fire Window Assembly. For further information, see NFPA 80, *Standard for Fire Doors and Other Opening Protectives.*

Copyright National Fire Protection Association
Provided by IHS under license with NFPA
No reproduction or networking permitted without license from IHS
Not for Resale

A.3.3.1.3 Window Assembly. For further information, see NFPA 80, *Standard for Fire Doors and Other Opening Protectives*.

A.3.3.5 Glazing Material. For further information, see NFPA 80, *Standard for Fire Doors and Other Opening Protectives*.

A.6.2.4 The exposed area of the fire window assembly is required to be calculated using the outside dimensions of the test specimen, including the frame, but normally not including the wall or partition into which the specimen is mounted. Where multiple test specimens are mounted in the same wall or partition, the rectangular or square wall area encompassing all of the specimens is considered to be the exposed area because the hose stream has to traverse the exposed area during its application.

Annex B Background and Development

This annex is not a part of the requirements of this NFPA document but is included for informational purposes only.

B.1 Introduction.

B.1.1 This annex provides the user of NFPA 257 with background information on the development of the standard and its application in the fire protection of buildings. It also provides guidance in the planning and performance of fire tests and in the reporting of results. No attempt has been made to incorporate all the available information on fire testing in this annex.

B.1.2 The serious student of fire testing should review the documents referenced in Annex D for a better appreciation of the intricate problems associated with testing and with the interpretation of test results.

B.2 Major Revisions.

B.2.1 The 1996 edition of this standard incorporated significant revisions to update the standard and to provide additional performance information. That information is useful for fire protection engineering purposes and building code requirements pertaining to the use and application of fire window assemblies.

B.2.2 Based on international standards, it has been determined that additional useful information can be obtained readily during the fire test of fire window assemblies. This information can be incorporated in building codes for use in determining acceptable levels of performance and can be applied by fire protection engineers and other design professionals to achieve a more cost-effective level of fire and life safety in the use of fire window assemblies.

B.2.3 The current requirements for fire test duration are open, whereas previous editions limited the duration to 45 minutes. With the advent of new glazing materials that provide various levels of fire protection, the current requirements have responded to the needs of the industry and the fire protection community by establishing various fire protection ratings that are both longer and shorter than the previous 45-minute specification. The 45-minute limit was based on the ability of standard wired glass to perform satisfactorily in accordance with earlier editions of NFPA 257.

B.2.4 To parallel the criteria in NFPA 252, *Standard Methods of Fire Tests of Door Assemblies*, the hose stream test duration and application pressure in this standard reflect the increased duration of the fire test. This standard also has been clarified with regard to the amount of glass or glass block permitted to be broken or otherwise dislodged during the fire test and the hose stream test.

B.2.5 Criteria also have been established for limiting flaming on the unexposed face of the fire window assembly. A test procedure for measuring the radiant heat flux from the unexposed face of the window assembly has been added to this annex. Its purpose is to provide a standardized protocol for making such measurements. The information obtained is then appropriate for fire protection engineering usage and for fire modeling in which it is desirable to control the radiant heat transfer through a fire window or glass block assembly.

B.3 Application.

B.3.1 Openings in the exterior walls of buildings have contributed to the spread of fire. Fire protection standards and building codes recognize the hazard associated with exterior wall openings that are created by inadequate spatial separation between buildings. Where the spatial separation is inadequate and the expected fire exposure is moderate or light, such codes and standards permit window openings protected by fire windows. Such protection can be provided by properly designed windows and glass block assemblies. Where sustained severe exposures are possible, the openings should be protected with fire door assemblies.

B.3.2 To protect paths of egress from interior fires, fire window assemblies can be specified for openings abutting exterior stairs and fire escapes and for openings in corridors whose wall openings are used to provide natural lighting of the corridor from adjacent rooms.

B.4 Scope and Significance.

B.4.1 NFPA 257 provides a test method for evaluating the effectiveness of protection for light-transmitting openings.

B.4.2 The test exposes the fire window assembly to predetermined fire conditions for a desired fire protection rating period, then, at the option of the test sponsor, subjects the assembly to a standard hose stream impact test.

B.4.3 NFPA 257 also measures heat transmission and radiation through the assembly *(see Annex C)*. NFPA 80A, *Recommended Practice for Protection of Buildings from Exterior Fire Exposures*, should be consulted for information on exterior fire exposure problems, and NFPA 80, *Standard for Fire Doors and Other Opening Protectives*, should be referenced for information on radiant heat transfer.

B.4.4 Openings in walls, even where protected, provide a lower fire protection rating than that of the wall, and the designed protection cannot be expected if combustibles are located directly in front of or behind the protectives. Therefore, clear spaces should be provided on both sides of openings in fire-rated walls and partitions.

B.5 Furnace.

B.5.1 The test method referred to in Section B.4 provides details on the operating characteristics and temperature measurement requirements of the test furnace. The walls of the furnace typically should be of furnace refractory materials and should be sufficiently rugged to maintain the overall integrity of the furnace during the fire exposure period.

B.5.2 The thermocouples in the furnace are required to be located 6 in. (152 mm) from the face of the wall in which the fire window assembly is installed. Otherwise, no furnace depth is specified. A minimum depth of 18 in. (457 mm) is necessary to meet the requirement that the exposed length of the thermocouple protection tube be at least 12 in. (305 mm).

Copyright National Fire Protection Association
Provided by IHS under license with NFPA
No reproduction or networking permitted without license from IHS
Not for Resale

B.5.3 The documents referenced in Annex D should be consulted for a more comprehensive review of furnace design and performance.

B.6 Temperature–Time Curve.

B.6.1 A specified temperature–time relationship for the test fire is defined in this standard. The actual recorded temperature–time condition achieved in the furnace during the test as measured by the area under the temperature–time curve is required to be within the specified percentages of those of the standard curve. The number and type of temperature-measuring devices are outlined in this standard, as are specific standard practices for location and use of temperature-measuring devices.

B.6.2 The standard temperature–time curve represents a relatively severe building fire. The curve was adopted in 1918 as a result of several conferences held by 11 technical organizations, including testing laboratories, insurance underwriters, fire protection associations, and technical societies. It should be recognized that the temperature–time relationship of this test method represents only one actual fire situation. However, it is used in other fire test methods such as those specified in NFPA 251, *Standard Methods of Tests of Fire Resistance of Building Construction and Materials*; NFPA 252, *Standard Methods of Fire Tests of Door Assemblies*; and ASTM E 814, *Standard Test Method for Fire Tests of Through-Penetration Fire Stops.*

B.6.3 Although the temperature–time curve is specified for standard thermocouples located within the furnace, measurement of the temperature–time curve using standard thermocouples does not establish a standard incident heat flux on the tested specimen. Incident heat flux that occurs in an actual fire can vary significantly from that developed by tests conducted by this standard test method. Similarly, this standard provides for a standard temperature–time relationship to be followed by all furnaces using this standard method, although the internal heat flux developed in various test furnaces can vary.

B.7 Furnace Control.

B.7.1 This standard contains specific instructions for measuring temperatures in the furnace and for the selection of required thermocouples. Thermocouples of the design specified are sufficiently rugged to retain accuracy throughout anticipated test periods. However, their massive construction results in a significant time delay in response to temperature change, causing actual temperatures that exceed the indicated temperatures during the early stages of the test period, when the temperature rises rapidly.

B.7.2 The iron or porcelain tubes surrounding the junction and leads of the thermocouple provide a shield against degradation of the junction and increase thermal inertia. Depending on the type of thermocouple used and its method of protection, some laboratories replace furnace thermocouples after accruing 3 or 4 hours of use.

B.8 Test Assemblies. Fire window assemblies are tested in relatively large sizes compared to most side-hinged swinging fire doors [for example, 100 ft^2 (9.3 m^2) for windows versus 20 ft^2 to 40 ft^2 (1.9 m^2 to 3.7 m^2) for doors]. The size of individual panes of glazing material is determined by the designer. Fire window assemblies as large as 150 ft^2 (13.9 m^2) have been tested. When the size of any assembly is less than 100 ft^2 (9.3 m^2), it should be reported.

B.9 Conduct of the Tests. The test frame or wall in which a fire window assembly is installed should be rugged enough to endure the fire exposure during the test period without affecting the window assembly. Traditionally, this wall has been of masonry construction. Currently, fire windows are installed in walls of other than masonry construction and have been tested in such walls as well.

B.10 Furnace Pressures.

B.10.1 A fire in a building compartment creates both negative and positive pressures on window assemblies, depending on the following:

(1) Atmospheric conditions
(2) Height above ground
(3) Wind conditions
(4) Ventilation of the compartment at the beginning of the fire
(5) Ventilation during the fire

B.10.2 A furnace pressure that is slightly higher than the ambient pressure outside of the furnace could have a significant impact on the performance of fire barrier assemblies. Operating a test furnace at a negative pressure differential has the effect of drawing any hot gases or flames back into the furnace chamber, so the ability to observe flaming around any openings on the unexposed surface is minimized. Furthermore, the draft induced by the negative pressure differential reduces any heating that might occur along the edges of any openings and, in fact, provides some degree of cooling of surfaces. Positive compartment pressures in actual fires have the opposite effect.

B.10.3 In previous editions, NFPA 257 specified that the pressure in the furnace should be maintained as nearly equal to atmospheric as possible. This method of test generally resulted in the test assembly's subjection to a negative pressure during the test because most laboratories set the neutral plane in the furnace at or above the top of the assembly. As revised, the standard now permits tests to be conducted under any pressure situation, depending on the needs or requirements of the manufacturer, the test laboratory, or the authority having jurisdiction. The pressure in the furnace is required to be measured and reported.

B.10.4 The differential pressure employed is the pressure that is necessary to evaluate the fire window assembly with respect to its field installation. The differential pressure should be determined by one of the following:

(1) Code requirements
(2) Design pressure that can occur in the type of installation for which the test is proposed
(3) Test sponsor
(4) Other criteria

B.11 Hose Stream Test.

B.11.1 Immediately following the fire test, the test assembly is removed from the furnace, and the fire window assembly is subjected to the impact, erosion, and cooling effects of a stream of water. The water discharges from a 2½ in. (63.5 mm) hose under the following conditions:

(1) Through a standard play pipe, equipped with a 1⅛ in. (28.5 mm) tip
(2) Under a specified pressure for a specified duration based on the length of the fire test and the area of the fire window assembly

B.11.2 The application of water produces stresses in the assembly and provides a measure of its structural capabilities.

--`,,```,,,,````-`-`,,`,,`,`,,`---

Copyright National Fire Protection Association
Provided by IHS under license with NFPA
No reproduction or networking permitted without license from IHS
Not for Resale

Weights have been used in Europe to provide a measure of the assembly's ability to withstand impact. The hose stream is considered to be an improvement over the weights in both uniformity and accuracy.

B.11.3 Just as the standard fire exposure is not intended to be representative of any or all actual fire conditions, the standard hose stream exposure is not intended to be representative of any actual fire-fighting or fire suppression activity. The fire exposure test and the hose stream test provide a relative measure of the performance of constructions and assemblies under specified standard exposure conditions.

B.11.4 The hose stream test provides a method for evaluating the integrity of constructions and assemblies and for eliminating inadequate materials or constructions. The cooling, impact, and erosion effects of the hose stream provide important tests of the integrity of the specimen being evaluated.

B.11.5 The rapid cooling and thermal shock imposed by the hose stream test following the fire exposure test eliminate materials that are subject to failure under such conditions. The orthogonal load imposed by the hose stream subjects vertical specimens to a load in a direction perpendicular to the normal dead load on the specimen. The imposition of such a load eliminates the use of constructions or assemblies with marginal factors of safety for withstanding lateral forces.

B.11.6 The hose stream test provides a real and measurable lateral impact load on the specimen. Testing by Ingberg at the National Bureau of Standards established that the standard hose stream test produced a 57.7 lb (256.6 N) force on the specimen. The combined effects of the hose stream test provide a method of screening the integrity of a specimen that cannot be provided by any other means.

B.12 Performance Criteria.

B.12.1 During the fire and hose stream tests, the fire window assembly should remain in place and should not become loosened from the test frame.

B.12.2 During the hose stream test, fire window assemblies are permitted to have glazing material dislodged from the central portion, provided the amount dislodged does not exceed 5 percent of the area of each individual glazed light.

B.12.3 During the hose stream test, separation of the glazing material edges from the frame by movement away from the frame that results in the creation of an opening *(see definition in* 3.3.6*)* is limited to 30 percent of the perimeter of each individual glazed light. At least 70 percent of the glass blocks should not develop openings.

Annex C Radiant and Total Heat Flux

This annex is not a part of the requirements of this NFPA document but is included for informational purposes only.

C.1 Fire Test. When it is desirable to obtain information and data on the transmission and reradiation of radiant heat through and by a fire window or glass block assembly, the procedures of Sections C.2 through C.4 should be followed. These procedures are intended to standardize the test methodology in order to develop comparative test results that can be used to establish a basis for incorporating mandatory procedures into this standard.

C.2 Furnace Heat Flux. Prior to performing measurements of thermal radiant heat transfer through window assemblies, a furnace calibration should be performed to determine baseline incident heat fluxes on the fire window assembly and to assess furnace heat flux uniformity. This procedure should be performed in accordance with C.2.1 through C.2.5.

C.2.1 The calibration procedure should be performed for a minimum duration of 3 hours with the furnace operating at temperatures corresponding to the standard temperature–time curve specified in Section 4.1.

C.2.2 The furnace should initially be calibrated prior to measuring the unexposed surface radiation of any fire window assemblies. After the initial furnace calibration, recalibration of the furnace is not necessary unless a significant modification is made to the furnace or to the furnace fuel that could have more than a nominal effect on the heat flux characteristics of the furnace.

C.2.3 The total (convective and radiative) heat flux produced in the furnace should be measured by three total heat flux transducers having a 180 degree view angle.

C.2.3.1 The transducers should be installed on the exposed face of a calibration wall and should be located at the upper, middle, and lower quarter of the calibration wall along its vertical centerline.

C.2.3.2 The following criteria apply to the calibration wall:

(1) The calibration wall should have the same dimensions as the furnace opening that receives the test assembly.
(2) The calibration wall should be constructed of noncombustible materials and should have a solid backing.
(3) The face of the calibration wall to be installed in the furnace opening facing the burners should be covered with a single layer of low-density ceramic fiber batts or blankets having a minimum thickness of 1 in. (25 mm).
(4) The calibration wall should be installed in the furnace opening prior to the start of the calibration procedure.

C.2.4 The radiant heat flux produced by the furnace should be measured by three radiant heat transducers that have a 150 degree view angle and are located adjacent to each of the total heat flux transducers. The view angles are specified to provide for a view of the entire furnace back wall opposite the calibration wall. The heat flux transducers should be equipped with a window to limit the transducer measurement to radiant heat flux only over the appropriate radiation spectrum. Sapphire or calcium fluoride windows have been found to be satisfactory for the anticipated wavelength range.

C.2.5 The total heat flux transducers and the radiant heat flux transducers should be calibrated to indicate incident heat flux with a range of 0 to 230 kW/m^2. Water-cooled Gardon-type transducers with an accuracy of ± 3 percent and a maximum nonlinearity of ± 2 percent of full range have been found to be suitable. The transducers initially should be calibrated traceable to NIST and not less than annually thereafter. The calibration schedule should be verified and documented before the heat flux transducers are used.

C.3 Unexposed Surface Radiation. Thermal radiation from the unexposed surface of the fire window assembly should be measured in accordance with Section C.3.

C.3.1 A minimum of two total heat flux transducers should be used.

Copyright National Fire Protection Association
Provided by IHS under license with NFPA
No reproduction or networking permitted without license from IHS
Not for Resale

C.3.1.1 The heat flux transducers should be located 6 ft ± 1 in. (1.83 m ± 25 mm) from the unexposed surface of the fire window assembly where measured along an axis perpendicular to the face of the test assembly. One transducer should be centered on the upper half of the fire window assembly, and one should be centered on the lower half.

C.3.1.2 The transducers should be aligned to allow viewing of the corresponding area of the fire window assembly with the aid of a laser pointer. The field of view of the transducers should include only the unexposed surface of the fire window assembly to prevent the fluxmeter from sensing radiation from surfaces other than the fire window assembly. The field of view should be achieved by using a radiant heat shield with an unglazed opening of the appropriate size placed between the fire window assembly and the heat flux transducers. Radiation from the unexposed face of the fire window assembly should not pass through any glazing or light-transmitting material and should not otherwise be obstructed before reaching the target of the transducers.

C.3.1.3 If it is not practicable to locate the transducers at the recommended distance of 6 ft (1.83 m), they should be located not more than 12 ft (3.66 m) from the unexposed surface of the fire window assembly where measured along the axis perpendicular to the face of the fire window assembly. The radiant heat flux corresponding to a distance of 6 ft (1.83 m) should be calculated based on the ratio of the corresponding radiation configuration factors of the 6 ft (1.83 m) distance and the greater distance used.

C.3.2 The heat flux transducers should be calibrated to indicate incident heat flux and to have a range of 0 to 50 kW/m^2. Water-cooled Gardon-type or Schmidt–Boelter-type transducers with an accuracy of ± 3 percent and a maximum nonlinearity of ± 2 percent of full range have been found to be suitable. The transducers initially should be calibrated traceable to NIST and not less than annually thereafter. The calibration schedule should be verified and documented before the heat flux transducers are used.

C.4 Results. The results of the heat flux measurements performed in accordance with this test procedure should be reported. The report should include, but should not be limited to, the following information:

(1) Total heat flux and the radiant heat flux measured inside the furnace (kW/ m^2)
(2) Radiant heat flux (kW/m^2) measured on the unexposed face side of the fire window assembly
(3) Position of the transducers (ft)
(4) Calculated radiant heat flux (kW/m^2) corresponding to a distance 6 ft (1.83 m) from the fire window assembly where the transducers are located more than 6 ft (1.83 m) from the test assembly

Annex D Informational References

D.1 Referenced Publications. The documents or portions thereof listed in this annex are referenced within the informational sections of this standard and are not part of the requirements of this document unless also listed in Chapter 2 for other reasons.

D.1.1 NFPA Publications. National Fire Protection Association, 1 Batterymarch Park, Quincy, MA 02169-7471.

NFPA 80, *Standard for Fire Doors and Other Opening Protectives*, 2007 edition.

NFPA 80A, *Recommended Practice for Protection of Buildings from Exterior Fire Exposures*, 2007 edition.

NFPA 251, *Standard Methods of Tests of Fire Resistance of Building Construction and Materials*, 2006 edition.

NFPA 252, *Standard Methods of Fire Tests of Door Assemblies*, 2003 edition.

Ingberg, S. H., Tests of the Severity of Building Fires, *NFPA Quarterly*, vol. 22, no. 1, pp. 43–61, 1928.

D.1.2 Other Publications.

D.1.2.1 ASTM Publications. ASTM International, 100 Barr Harbor Drive, P.O. Box C700, West Conshohocken, PA 19428-2959.

ASTM E 814, *Standard Test Method for Fire Tests of Through-Penetration Fire Stops*, 2002.

D.2 Informational References. The following documents or portions thereof are listed here as informational resources only. They are not a part of the requirements of this document.

NFPA *101®*, *Life Safety Code®*, 2006 edition.

NFPA 105, *Standard for the Installation of Smoke Door Assemblies and Other Opening Protectives*, 2007 edition.

"Thermal Radiation from Marine Fire Boundaries: Evaluation and Analysis of A-60, A-30, A-15, and A-0 Bulkhead Assemblies," Report No. CG-D-01-94, LeMoyne Boyer, SwRI, San Antonio, TX, July 1993.

D.3 References for Extracts in Informational Sections. (Reserved)

--`,,```,,,,````-`-`,,`,,`,`,,`---

Copyright National Fire Protection Association
Provided by IHS under license with NFPA
No reproduction or networking permitted without license from IHS
Not for Resale

Index

Copyright © 2006 National Fire Protection Association. All Rights Reserved.

The copyright in this index is separate and distinct from the copyright in the document that it indexes. The licensing provisions set forth for the document are not applicable to this index. This index may not be reproduced in whole or in part by any means without the express written permission of NFPA.

-A-

Application of standard B.3
Assemblies .....*see* Fire window assemblies; Glass block assemblies; Window assemblies

-B-

Background and development of standard ..... Annex B

-C-

Control of fire tests ..... Chap. 4

-D-

Definitions ..... Chap. 3

-F-

Fire tests ..... Annex C
Control of ..... Chap. 4
Duration 6.1.1, B.2.3
Furnace heat flux 6.1.2, C.2, C.4
Performance criteria 7.1, B.12
Report ..... 8.1.1 to 8.1.12, 8.1.14, C.4
Unexposed surface radiation 6.1.3, B.2.5, C.3, C.4
Fire window assemblies
Construction 5.1
Definition 3.3.1.1, A.3.3.1.1
Fire test .....*see* Fire tests
Hose stream tests .....*see* Hose stream tests
Mounting in wall or partition 5.2
Size 5.1, B.8
Test wall or partition 5.3
Construction materials 5.3.1, 8.1.2, B.9
Strength and fire resistance of 5.3.1, B.9
Furnace B.5
Control 4.3.2, B.7
Heat flux, measurement of 6.1.2, C.2, C.4
Pressures 4.3, B.10
Temperatures 4.2

-G-

Glass block assemblies
Definition 3.3.1.2
Performance criteria 7.1.2, 7.2.2
Glazed lights 7.2.1.3, 7.2.1.4, 8.1.7, B.12.2, B.12.3
Definition 3.3.4
Glazing material 7.1.1.3, 7.2.1.3, 7.2.1.4, 8.1.7, B.12.2, B.12.3
Definition 3.3.5, A.3.3.5

-H-

Heat flux
Furnace 6.1.2, C.2, C.4
Radiant ..... 6.1.2, 6.1.3, B.2.5, B.4.3, Annex C
Total ..... 6.1.2, Annex C
Hose stream tests 6.2, A.6.2.4, B.4.2, B.11, B.12
Duration B.2.4
Performance criteria 7.2
Report 8.1.4, 8.1.5, 8.1.13, 8.1.14

-M-

Measurement, units of 1.3

-N-

Neutral pressure 4.3.4

-O-

Openings B.4.4
Definition 3.3.6
Performance criteria
Glass block assemblies 7.1.2.3, 7.1.2.4, 7.2.2.2, B.12.3
Window assemblies 7.1.1.3, 7.1.1.5, 7.1.1.6, 7.2.1.3, 7.2.1.4, B.12.3
Protection for B.3.1

-P-

Performance criteria ..... Chap. 7, B.12
Positive pressure 4.3.3
Pressure-sensing probes ..... 4.3.1.1 to 4.3.1.5
Pressures, furnace 4.3, B.10
Purpose of standard 1.2, A.1.2

-R-

References ..... Chap. 2, Annex D
Report of results ..... Chap. 8, C.4

-S-

Scope of standard 1.1, B.4
Shall (definition) 3.2.1
Should (definition) 3.2.2
Significance of standard B.4
Standard (definition) 3.2.3

-T-

Temperatures
Furnace 4.2
Temperature–time curve 4.1, 4.2.3, 8.1.3, 8.1.12, B.6
Test assemblies .....*see* Fire window assemblies
Tests
Control of ..... Chap. 4
Fire .....*see* Fire tests
Hose stream .....*see* Hose stream tests
Thermocouples 4.2.1, 8.1.12, B.5.2

-U-

Units of measurement 1.3

-W-

Window assemblies
Definition 3.3.1.3, A.3.3.1.3
Performance criteria
Fire test 7.1.1
Hose stream test 7.2.1
Report, test results 8.1.7

Copyright National Fire Protection Association
Provided by IHS under license with NFPA
No reproduction or networking permitted without license from IHS

Not for Resale

Sequence of Events Leading to Issuance of an NFPA Committee Document

Step 1: Call for Proposals

- Proposed new Document or new edition of an existing Document is entered into one of two yearly revision cycles, and a Call for Proposals is published.

Step 2: Report on Proposals (ROP)

- Committee meets to act on Proposals, to develop its own Proposals, and to prepare its Report.
- Committee votes by written ballot on Proposals. If two-thirds approve, Report goes forward. Lacking two-thirds approval, Report returns to Committee.
- Report on Proposals (ROP) is published for public review and comment.

Step 3: Report on Comments (ROC)

- Committee meets to act on Public Comments to develop its own Comments, and to prepare its report.
- Committee votes by written ballot on Comments. If two-thirds approve, Report goes forward. Lacking two-thirds approval, Report returns to Committee.
- Report on Comments (ROC) is published for public review.

Step 4: Technical Report Session

- "*Notices of intent to make a motion"* are filed, are reviewed, and valid motions are certified for presentation at the Technical Report Session. ("Consent Documents" that have no certified motions bypass the Technical Report Session and proceed to the Standards Council for issuance.)
- NFPA membership meets each June at the Annual Meeting Technical Report Session and acts on Technical Committee Reports (ROP and ROC) for Documents with "certified amending motions."
- Committee(s) vote on any amendments to Report approved at NFPA Annual Membership Meeting.

Step 5: Standards Council Issuance

- Notification of intent to file an appeal to the Standards Council on Association action must be filed within 20 days of the NFPA Annual Membership Meeting.
- Standards Council decides, based on all evidence, whether or not to issue Document or to take other action, including hearing any appeals.

Committee Membership Classifications

The following classifications apply to Technical Committee members and represent their principal interest in the activity of the committee.

M *Manufacturer:* A representative of a maker or marketer of a product, assembly, or system, or portion thereof, that is affected by the standard.

U *User:* A representative of an entity that is subject to the provisions of the standard or that voluntarily uses the standard.

I/M *Installer/Maintainer:* A representative of an entity that is in the business of installing or maintaining a product, assembly, or system affected by the standard.

L *Labor:* A labor representative or employee concerned with safety in the workplace.

R/T *Applied Research/Testing Laboratory:* A representative of an independent testing laboratory or independent applied research organization that promulgates and/or enforces standards.

E *Enforcing Authority:* A representative of an agency or an organization that promulgates and/or enforces standards.

I *Insurance:* A representative of an insurance company, broker, agent, bureau, or inspection agency.

C *Consumer:* A person who is, or represents, the ultimate purchaser of a product, system, or service affected by the standard, but who is not included in the *User* classification.

SE *Special Expert:* A person not representing any of the previous classifications, but who has a special expertise in the scope of the standard or portion thereof.

NOTES;
1. "Standard" connotes code, standard, recommended practice, or guide.
2. A representative includes an employee.
3. While these classifications will be used by the Standards Council to achieve a balance for Technical Committees, the Standards Council may determine that new classifications of members or unique interests need representation in order to foster the best possible committee deliberations on any project. In this connection, the Standards Council may make appointments as it deems appropriate in the public interest, such as the classification of "Utilities" in the National Electrical Code Committee.
4. Representatives of subsidiaries of any group are generally considered to have the same classification as the parent organization.

--`,,```,,,,````-`-`,,`,,`,`,,`---

Copyright National Fire Protection Association
Provided by IHS under license with NFPA
No reproduction or networking permitted without license from IHS
Not for Resale

NFPA Technical Committee Document Proposal Form

NOTE: All Proposals must be received by 5:00 p.m. EST/EDST on the published Proposal Closing Date.

For further information on the standards-making process, please contact the Codes and Standards Administration at 617-984-7249.

For technical assistance, please call NFPA at 617-770-3000.

FOR OFFICE USE ONLY

Log #:

Date Rec'd:

Please indicate in which format you wish to receive your ROP/ROC ☐ **electronic** ☐ **paper** ☒ **download**
(Note: If choosing the download option, you must view the ROP/ROC from our website; no copy will be sent to you.)

Date April 1, 200X **Name** John J. Doe **Tel. No.** 716-555-1234

Company Air Canada Pilot's Association

Street Address 123 Summer Street Lane **City** Lewiston **State** NY **Zip** 14092

Please indicate organization represented (if any)

1. (a) NFPA Document Title National Fuel Gas Code **NFPA No. & Year** 54, 200X Edition

(**b) Section/Paragraph** 3.3

2. Proposal Recommends (check one): ☐ new text ☒ revised text ☐ deleted text

3. Proposal (include proposed new or revised wording, or identification of wording to be deleted): [Note: Proposed text should be in legislative format, i.e., use underscore to denote wording to be inserted (inserted wording) and strike-through to denote wording to be deleted (~~deleted wording~~).]

Revise definition of effective ground-fault current path to read:

3.3.78 Effective Ground-Fault Current Path. An intentionally constructed, permanent, low impedance electrically conductive path designed and intended to carry ~~underground~~ electric fault current ~~conditions~~ from the point of a ground fault on a wiring system to the electrical supply source.

4. Statement of Problem and Substantiation for Proposal: (Note: State the problem that would be resolved by your recommendation; give the specific reason for your Proposal, including copies of tests, research papers, fire experience, etc. If more than 200 words, it may be abstracted for publication.)

Change uses proper electrical terms.

5. Copyright Assignment

(a) ☐ **I am the author of the text or other material (such as illustrations, graphs) proposed in this Proposal.**

(b) ☒ **Some or all of the text or other material proposed in this Proposal was not authored by me. Its source is as follows** (please identify which material and provide complete information on its source)**:**

ABC Co.

I hereby grant and assign to NFPA all and full rights in copyright in this Proposal and understand that I acquire no rights in any publication of NFPA in which this Proposal in this or another similar or analogous form is used. Except to the extent that I do not have authority to make an assignment in materials that I have identified in (b) above, I hereby warrant that I am the author of this Proposal and that I have full power and authority to enter into this assignment.

Signature (Required)

PLEASE USE SEPARATE FORM FOR EACH PROPOSAL • NFPA Fax: (617) 770-3500
Mail to: Secretary, Standards Council, National Fire Protection Association, 1 Batterymarch Park, Quincy, MA 02169-7471

8/29/2006

SAMPLE

--`,,```,,,,````-`-`,,`,,`,`,,`---

Copyright National Fire Protection Association
Provided by IHS under license with NFPA
No reproduction or networking permitted without license from IHS

Not for Resale

NFPA Technical Committee Document Proposal Form

NOTE: All Proposals must be received by 5:00 p.m. EST/EDST on the published Proposal Closing Date.

For further information on the standards-making process, please contact the Codes and Standards Administration at 617-984-7249.

For technical assistance, please call NFPA at 617-770-3000.

FOR OFFICE USE ONLY

Log #: _____

Date Rec'd: _____

Please indicate in which format you wish to receive your ROP/ROC ☐ electronic ☐ paper ☐ download
(Note: If choosing the download option, you must view the ROP/ROC from our website; no copy will be sent to you.)

Date _____ **Name** _____ **Tel. No.** _____

Company _____

Street Address _____ **City** _____ **State** _____ **Zip** _____

Please indicate organization represented (if any) _____

1. (a) NFPA Document Title _____ **NFPA No. & Year** _____

(b) Section/Paragraph _____

2. Proposal Recommends (check one): ☐ new text ☐ revised text ☐ deleted text

3. Proposal (include proposed new or revised wording, or identification of wording to be deleted): [Note: Proposed text should be in legislative format, i.e., use underscore to denote wording to be inserted (inserted wording) and strike-through to denote wording to be deleted (~~deleted wording~~).]

4. Statement of Problem and Substantiation for Proposal: (Note: State the problem that would be resolved by your recommendation; give the specific reason for your Proposal, including copies of tests, research papers, fire experience, etc. If more than 200 words, it may be abstracted for publication.)

5. Copyright Assignment

(a) ☐ I am the author of the text or other material (such as illustrations, graphs) proposed in this Proposal.

(b) ☐ Some or all of the text or other material proposed in this Proposal was not authored by me. Its source is as follows (please identify which material and provide complete information on its source)**:**

_____

I hereby grant and assign to NFPA all and full rights in copyright in this Proposal and understand that I acquire no rights in any publication of NFPA in which this Proposal in this or another similar or analogous form is used. Except to the extent that I do not have authority to make an assignment in materials that I have identified in (b) above, I hereby warrant that I am the author of this Proposal and that I have full power and authority to enter into this assignment.

Signature (Required) _____

PLEASE USE SEPARATE FORM FOR EACH PROPOSAL • NFPA Fax: (617) 770-3500

Mail to: Secretary, Standards Council, National Fire Protection Association, 1 Batterymarch Park, Quincy, MA 02169-7471

8/29/2006

Copyright National Fire Protection Association
Provided by IHS under license with NFPA
No reproduction or networking permitted without license from IHS
Not for Resale