# NFPA 256

# Standard Methods of Fire Tests of Roof Coverings

# 2003 Edition

NFPA, 1 Batterymarch Park, PO Box 9101, Quincy, MA 02269-9101
An International Codes and Standards Organization

NFPA License Agreement

This document is copyrighted by the National Fire Protection Association (NFPA), 1 Batterymarch Park, Quincy, MA 02269-9101 USA.
All rights reserved.

NFPA grants you a license as follows: The right to download an electronic file of this NFPA document for temporary storage on one computer for purposes of viewing and/or printing one copy of the NFPA document for individual use. Neither the electronic file nor the hard copy print may be reproduced in any way. In addition, the electronic file may not be distributed elsewhere over computer networks or otherwise. The hard copy print may only be used personally or distributed to other employees for their internal use within your organization.

Copyright National Fire Protection Association
Provided by IHS under license with NFPA
No reproduction or networking permitted without license from IHS

Not for Resale

## IMPORTANT NOTICES AND DISCLAIMERS CONCERNING NFPA DOCUMENTS

### NOTICE AND DISCLAIMER OF LIABILITY CONCERNING THE USE OF NFPA DOCUMENTS

NFPA codes, standards, recommended practices, and guides, of which the document contained herein is one, are developed through a consensus standards development process approved by the American National Standards Institute. This process brings together volunteers representing varied viewpoints and interests to achieve consensus on fire and other safety issues. While the NFPA administers the process and establishes rules to promote fairness in the development of consensus, it does not independently test, evaluate, or verify the accuracy of any information or the soundness of any judgments contained in its codes and standards.

The NFPA disclaims liability for any personal injury, property or other damages of any nature whatsoever, whether special, indirect, consequential or compensatory, directly or indirectly resulting from the publication, use of, or reliance on this document. The NFPA also makes no guaranty or warranty as to the accuracy or completeness of any information published herein.

In issuing and making this document available, the NFPA is not undertaking to render professional or other services for or on behalf of any person or entity. Nor is the NFPA undertaking to perform any duty owed by any person or entity to someone else. Anyone using this document should rely on his or her own independent judgment or, as appropriate, seek the advice of a competent professional in determining the exercise of reasonable care in any given circumstances.

The NFPA has no power, nor does it undertake, to police or enforce compliance with the contents of this document. Nor does the NFPA list, certify, test or inspect products, designs, or installations for compliance with this document. Any certification or other statement of compliance with the requirements of this document shall not be attributable to the NFPA and is solely the responsibility of the certifier or maker of the statement.

Copyright National Fire Protection Association
Provided by IHS under license with NFPA
No reproduction or networking permitted without license from IHS
Not for Resale

## ADDITIONAL NOTICES AND DISCLAIMERS

### Updating of NFPA Documents

Users of NFPA codes, standards, recommended practices, and guides should be aware that these documents may be superseded at any time by the issuance of new editions or may be amended from time to time through the issuance of Tentative Interim Amendments. An official NFPA document at any point in time consists of the current edition of the document together with any Tentative Interim Amendments and any Errata then in effect. In order to determine whether a given document is the current edition and whether it has been amended through the issuance of Tentative Interim Amendments or corrected through the issuance of Errata, consult appropriate NFPA publications such as the National Fire Codes® Subscription Service, visit the NFPA website at www.nfpa.org, or contact the NFPA at the address listed below.

### Interpretations of NFPA Documents

A statement, written or oral, that is not processed in accordance with Section 6 of the Regulations Governing Committee Projects shall not be considered the official position of NFPA or any of its Committees and shall not be considered to be, nor be relied upon as, a Formal Interpretation.

### Patents

The NFPA does not take any position with respect to the validity of any patent rights asserted in connection with any items which are mentioned in or are the subject of NFPA codes, standards, recommended practices, and guides, and the NFPA disclaims liability for the infringement of any patent resulting from the use of or reliance on these documents. Users of these documents are expressly advised that determination of the validity of any such patent rights, and the risk of infringement of such rights, is entirely their own responsibility.

NFPA adheres to applicable policies of the American National Standards Institute with respect to patents. For further information contact the NFPA at the address listed below.

### Law and Regulations

Users of these documents should consult applicable federal, state, and local laws and regulations. NFPA does not, by the publication of its codes, standards, recommended practices, and guides, intend to urge action that is not in compliance with applicable laws, and these documents may not be construed as doing so.

### Copyrights

This document is copyrighted by the NFPA. It is made available for a wide variety of both public and private uses. These include both use, by reference, in laws and regulations, and use in private self-regulation, standardization, and the promotion of safe practices and methods. By making this document available for use and adoption by public authorities and private users, the NFPA does not waive any rights in copyright to this document.

Use of NFPA documents for regulatory purposes should be accomplished through adoption by reference. The term "adoption by reference" means the citing of title, edition, and publishing information only. Any deletions, additions, and changes desired by the adopting authority should be noted separately in the adopting instrument. In order to assist NFPA in following the uses made of its documents, adopting authorities are requested to notify the NFPA (Attention: Secretary, Standards Council) in writing of such use. For technical assistance and questions concerning adoption of NFPA documents, contact NFPA at the address below.

### For Further Information

All questions or other communications relating to NFPA codes, standards, recommended practices, and guides and all requests for information on NFPA procedures governing its codes and standards development process, including information on the procedures for requesting Formal Interpretations, for proposing Tentative Interim Amendments, and for proposing revisions to NFPA documents during regular revision cycles, should be sent to NFPA headquarters, addressed to the attention of the Secretary, Standards Council, NFPA, 1 Batterymarch Park, P.O. Box 9101, Quincy, MA 02269-9101.

For more information about NFPA, visit the NFPA website at www.nfpa.org.

Copyright National Fire Protection Association
Provided by IHS under license with NFPA
No reproduction or networking permitted without license from IHS
Not for Resale

Copyright © 2003, National Fire Protection Association, All Rights Reserved

**NFPA 256**

**Standard**

# Methods of Fire Tests of Roof Coverings

**2003 Edition**

This edition of NFPA 256, *Standard Methods of Fire Tests of Roof Coverings*, was prepared by the Technical Committee on Fire Tests and acted on by NFPA at its May Association Technical Meeting held May 18–21, 2003, in Dallas, TX. It was issued by the Standards Council on July 18, 2003, with an effective date of August 7, 2003, and supersedes all previous editions.

This edition of NFPA 256 was approved as an American National Standard on July 18, 2003.

## Origin and Development of NFPA 256

The test procedure covered by this standard was developed prior to 1920 by Underwriters Laboratories Inc. The test procedure was put in standard form by the E5 Committee on Fire Standards of the American Society for Testing and Materials (ASTM), adopted by ASTM as a tentative standard in 1955, and revised in 1956. It was adopted by the NFPA on May 22, 1958, on recommendation of the Committee on Fire Tests and was subsequently published as NFPA 256, in May 1958. It was adopted by ASTM as a standard later in 1958 and published by ASTM as E 108-58. It was also published by Underwriters Laboratories Inc., as No. 790, September 1958. Revised NFPA editions were published in 1964, 1970, 1976, 1981, and 1987. The 1993 edition of NFPA 256 was revised editorially to bring this document into conformance with its ASTM and UL counterparts.

The 1998 edition added a new Chapter 13, "Report of Results." This was done to clarify and to identify the required elements that relate to both specimen preparation and test results.

The 2003 edition is a reorganization for compliance with the NFPA *Manual of Style*, with no technical changes from the previous edition.

Copyright National Fire Protection Association
Provided by IHS under license with NFPA
No reproduction or networking permitted without license from IHS
Not for Resale

## Technical Committee on Fire Tests

**William E. Fitch,** *Chair*
Omega Point Laboratories Inc., TX [RT]

**Patty K. Adair,** American Textile Manufacturers Institute Inc., DC [M]
Rep. American Textile Manufacturers Institute Inc.
**Jesse J. Beitel,** Hughes Associates, Inc., MD [SE]
**April L. Berkol,** Starwood Hotels & Resorts Worldwide, Inc., NY [U]
Rep. American Hotel & Lodging Association
**Robert G. Bill, Jr.,** FM Global, MA [I]
**John A. Blair,** The Dupont Company, DE [M]
Rep. Society of the Plastics Industry Inc.
**Gordon H. Damant,** Inter-City Testing & Consulting Corporation of California, CA [SE]
**Thomas W. Fritz,** Armstrong World Industries Inc., PA [M]
**James R. Griffith,** Southwest Research Institute, TX [RT]
**Gordon E. Hartzell,** Hartzell Consulting, Inc., TX [SE]
**Marcelo M. Hirschler,** GBH International, CA [SE]
**Alfred J. Hogan,** Reedy Creek Improvement District, FL [E]
Rep. International Fire Marshals Association
**William E. Koffel,** Koffel Associates, Inc., MD [SE]
**James R. Lawson,** U.S. National Institute of Standards & Technology, MD [RT]
**Rodney A. McPhee,** Canadian Wood Council, ON [M]
**William S. Metes,** Underwriters Laboratories Inc., IL [RT]
**Frederick W. Mowrer,** University of Maryland, MD [SE]
**Nigel R. Stamp,** Intertek Testing Services NA Inc., WI [RT]
**Phil M. Stricklen,** American Fibers and Yarns Company, GA [M]
**Kuma Sumathipala,** American Forest & Paper Association, DC [M]
Rep. American Forest & Paper Association
**T. Hugh Talley,** Hugh Talley Company, TN [M]
Rep. Upholstered Furniture Action Council
**Rick Thornberry,** The Code Consortium, Inc., CA [SE]
**William A. Webb,** Performance Technology Consulting, Ltd., IL [SE]
**Robert A. Wessel,** Gypsum Association, DC [M]
**Robert J. Wills,** American Iron and Steel Institute, AL [M]
Rep. American Iron and Steel Institute
**Peter J. Willse,** Industrial Risk Insurers, CT [I]
Rep. Industrial Risk Insurers

### Alternates

**Delbert F. Boring, Jr.,** American Iron and Steel Institute, OH [M]
(Alt. to R. J. Wills)
**Sam W. Francis,** American Forest & Paper Association, PA [M]
(Alt. to K. Sumathipala)
**Richard G. Gann, Ph.D.,** U.S. National Institute of Standards & Technology, MD [RT]
(Alt. to J. R. Lawson)
**Peter L. Hunsberger,** Armstrong World Industries, Inc., PA [M]
(Alt. to T. W. Fritz)
**James K. Lathrop,** Koffel Associates, Inc., CT [SE]
(Alt. to W. E. Koffel)
**James A. Milke,** University of Maryland, MD [SE]
(Alt. to F. W. Mowrer)
**Arthur J. Parker,** Hughes Associates, Inc., MD [SE]
(Alt. to J. J. Beitel)
**David K. Tanaka,** FM Global, MA [I]
(Alt. to R. G. Bill)
**William A. Thornberg,** Industrial Risk Insurers, CT [I]
(Alt. to P. J. Willse)
**James J. Urban,** Underwriters Laboratories Inc., IL [RT]
(Alt. to W. S. Metes)
**Joe Ziolkowski,** American Furniture Manufacturers Association, NC [M]
(Alt. to T. H. Talley)

### Nonvoting

**Robert H. Barker,** American Fiber Manufacturers Association, DC [M]
Rep. American Fiber Manufacturers Association
**Tod L. Jilg,** Hoechst Celanese Corporation, NC [M]
Rep. American Fiber Manufacturers Association
**Rohit Khanna,** U.S. Consumer Product Safety Commission, MD [C]
**Herman H. Spaeth,** Novato, CA

**Steven E. Younis,** NFPA Staff Liaison

*This list represents the membership at the time the Committee was balloted on the final text of this edition. Since that time, changes in the membership may have occurred. A key to classifications is found at the back of the document.*

NOTE: Membership on a committee shall not in and of itself constitute an endorsement of the Association or any document developed by the committee on which the member serves.

**Committee Scope:** This Committee shall have primary responsibility for documents on fire testing procedures, for reviewing existing fire test standards and recommending appropriate action to NFPA, for recommending the application of and advising on the interpretation of acceptable test standards for fire problems of concern to NFPA technical committees and members, and for acting in a liaison capacity between NFPA and the committees of other organizations writing fire test standards. This Committee does not cover fire tests that are used to evaluate extinguishing agents, devices, or systems.



Copyright National Fire Protection Association
Provided by IHS under license with NFPA
No reproduction or networking permitted without license from IHS
Not for Resale

## Contents


**Chapter 1 Administration** ..... **256–** 4
1.1 Scope ..... **256–** 4
1.2 Purpose ..... **256–** 4
1.3 Application ..... **256–** 4
1.4 Units and Formulas ..... **256–** 4

**Chapter 2 Referenced Publications** ..... **256–** 4
2.1 General ..... **256–** 4
2.2 NFPA Publications. (Reserved) ..... **256–** 4
2.3 Other Publications ..... **256–** 4

**Chapter 3 Definitions** ..... **256–** 4
3.1 General ..... **256–** 4
3.2 NFPA Official Definitions ..... **256–** 4
3.3 General Definitions. (Reserved) ..... **256–** 4

**Chapter 4 Equipment and General Test Procedures** ..... **256–** 4
4.1 Apparatus ..... **256–** 4
4.2 Test Flame ..... **256–** 4
4.3 Supply Air ..... **256–** 7

**Chapter 5 Calibration** ..... **256–** 7
5.1 Air Current ..... **256–** 7
5.2 Flame Temperature ..... **256–** 7
5.3 Rain Test ..... **256–** 7
5.4 Frequency of Calibration ..... **256–** 7

**Chapter 6 Preparation of Test Specimens** ..... **256–** 8
6.1 Construction of Test Decks ..... **256–** 8
6.2 Application of Roofing on Test Roof Deck ..... **256–** 9
6.3 Storage and Conditioning of Test Roof Decks ..... **256–**10

**Chapter 7 General Conditions** ..... **256–**10
7.1 Tests ..... **256–**10
7.2 Mortar ..... **256–**10
7.3 Air Current ..... **256–**10
7.4 Roof Coverings ..... **256–**10
7.5 Built-up Coverings ..... **256–**10
7.6 Slope ..... **256–**10

**Chapter 8 Intermittent Flame Exposure Test** ..... **256–**10
8.1 General ..... **256–**10
8.2 Procedure ..... **256–**10
8.3 Application of Flame ..... **256–**10
8.4 Air Current ..... **256–**10
8.5 Observations ..... **256–**10

**Chapter 9 Spread of Flame Test** ..... **256–**10
9.1 General ..... **256–**10
9.2 Procedure ..... **256–**10
9.3 Application of Flame ..... **256–**10
9.4 Observations ..... **256–**10

**Chapter 10 Burning Brand Test** ..... **256–**10
10.1 General ..... **256–**10
10.2 Procedure ..... **256–**11
10.3 Size and Construction of Brands ..... **256–**11
10.4 Ignition of Brands ..... **256–**11
10.5 Test Conditions ..... **256–**11
10.6 Duration of the Test ..... **256–**12
10.7 Test Results ..... **256–**12
10.8 Observations ..... **256–**12

**Chapter 11 Flying Brand Test** ..... **256–**12
11.1 General ..... **256–**12
11.2 Procedure ..... **256–**12
11.3 Application of Flame ..... **256–**12
11.4 Air Current ..... **256–**13

**Chapter 12 Rain Test** ..... **256–**13
12.1 General ..... **256–**13
12.2 Procedure ..... **256–**13
12.3 Application of Water ..... **256–**13

**Chapter 13 Weathering Test** ..... **256–**13
13.1 General ..... **256–**13
13.2 Test Conditions ..... **256–**13
13.3 Conditioning ..... **256–**13
13.4 Plywood Decks ..... **256–**13
13.5 Testing ..... **256–**13

**Chapter 14 Conditions of Classification** ..... **256–**13
14.1 Conditions to Be Met ..... **256–**13

**Chapter 15 Report of Results** ..... **256–**13
15.1 Data ..... **256–**13

**Annex A Explanatory Material** ..... **256–**14

**Annex B Informational References** ..... **256–**14

**Index** ..... **256–**15




Copyright National Fire Protection Association
Provided by IHS under license with NFPA
No reproduction or networking permitted without license from IHS
Not for Resale

NFPA 256

Standard

# Methods of Fire Tests of Roof Coverings

2003 Edition

***IMPORTANT NOTE: This NFPA document is made available for use subject to important notices and legal disclaimers. These notices and disclaimers appear in all publications containing this document and may be found under the heading "Important Notices and Disclaimers Concerning NFPA Documents." They can also be obtained on request from NFPA or viewed at www.nfpa.org/disclaimers.***

NOTICE: An asterisk (*) following the number or letter designating a paragraph indicates that explanatory material on the paragraph can be found in Annex A.

Information on referenced publications can be found in Chapter 2 and Annex B.

## Chapter 1 Administration

**1.1* Scope.** These test methods shall measure the relative fire characteristics of roof coverings under a simulated fire originating outside a building.

**1.2 Purpose.** The tests shall be done to demonstrate the relative performance of materials under the test exposure involved.

**1.3 Application.** The test methods shall be applicable to roof coverings intended for installation on either combustible or noncombustible decks, when applied as intended for use.

**1.3.1 Classes of Tests.** Three classes of fire test exposure shall be described.

**(A)** ***Class A.*** Class A tests shall be applicable to roof coverings that are effective against severe test exposure, that afford a high degree of fire protection to the roof deck, that do not slip from position, and that do not present a flying brand hazard.

**(B)** ***Class B.*** Class B tests shall be applicable to roof coverings that are effective against moderate test exposure, that afford a moderate degree of fire protection to the roof deck, that do not slip from position, and that do not present a flying brand hazard.

**(C)** ***Class C.*** Class C tests shall be applicable to roof coverings that are effective against light test exposure, that afford a light degree of fire protection to the roof deck, that do not slip from position, and that do not present a flying brand hazard.

**1.3.2 Test Limitations.** These tests shall not be construed as having determined suitability for use after fire exposure.

**1.4 Units and Formulas.**

**1.4.1 SI Units.** Metric units of measurement in this standard are in accordance with the modernized metric system known as the International System of Units (SI).

**1.4.2 Primary Values.** The SI value for a measurement and the equivalent inch-pound value given in parentheses shall each be acceptable for use as primary units for satisfying the requirements of this standard.

## Chapter 2 Referenced Publications

**2.1 General.** The documents or portions thereof listed in this chapter are referenced within this standard and shall be considered part of the requirements of this document.

**2.2 NFPA Publications. (Reserved)**

**2.3 Other Publications.**

**2.3.1 ASTM Publications.** American Society for Testing and Materials, 100 Barr Harbor Drive, West Conshohocken, PA 19428-2959.

ASTM D 225, *Standard Method for Steam Distillation of Bituminous Protective Coatings,* 2000.

ASTM D 3018, *Standard Specification for Class A Asphalt Shingles Surfaced with Mineral Granules,* 2000.

**2.3.2 UL Publication.** Underwriters Laboratories Inc., 333 Pfingsten Road, Northbrook, IL 60062.

UL 55B, *Class C Asphalt Organic-Felt Sheet Roofing and Shingles*, 1983.

**2.3.3 U.S. Government Publication.** United States Department of Commerce, National Institute of Standards and Technology, Gaithersburg, MD 20899.

PS1, *Construction and Industrial Plywood*, 1995.

## Chapter 3 Definitions

**3.1 General.** The definitions contained in this chapter shall apply to the terms used in this standard. Where terms are not included, common usage of the terms shall apply.

**3.2 NFPA Official Definitions.**

**3.2.1 Shall.** Indicates a mandatory requirement.

**3.2.2 Should.** Indicates a recommendation or that which is advised but not required.

**3.2.3 Standard.** A document, the main text of which contains only mandatory provisions using the word "shall" to indicate requirements and which is in a form generally suitable for mandatory reference by another standard or code or for adoption into law. Nonmandatory provisions shall be located in an appendix or annex, footnote, or fine-print note and are not to be considered a part of the requirements of a standard.

**3.3 General Definitions. (Reserved)**

## Chapter 4 Equipment and General Test Procedures

**4.1 Apparatus.**

**4.1.1*** The essential elements of the fire test apparatus shall be configured as illustrated in Figure 4.1.1(a). These elements shall include a test roof deck, an adjustable frame *[see Figure 4.1.1(b)]* on which the test roof deck is mounted, a gas burner as a source of flame, a wind tunnel, an air velocity meter, a gas pressure gauge, a control valve, and an adjustable air supply.

**4.1.2** The essential elements of the rain test apparatus shall be configured as illustrated in Figure 4.1.2.

**4.2 Test Flame.** Since control of the shape and size of the flame depends on minimizing air turbulence in the immediate vicinity of the apparatus, the conditions in 4.2.1 and 4.2.2 shall be met.



Copyright National Fire Protection Association
Provided by IHS under license with NFPA
No reproduction or networking permitted without license from IHS
Not for Resale

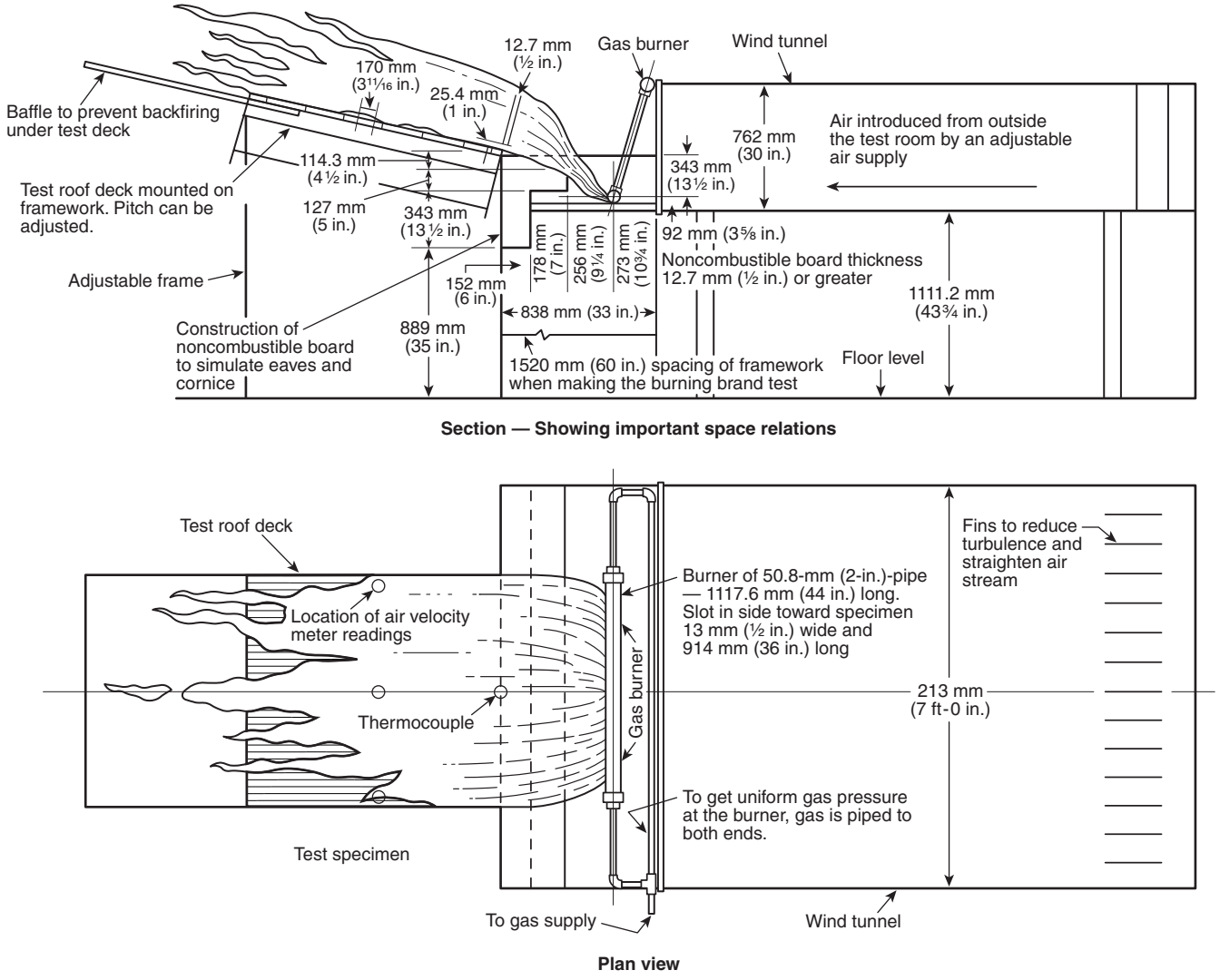


**FIGURE 4.1.1(a) Schematic Drawing of Fire Test Apparatus.**



Copyright National Fire Protection Association
Provided by IHS under license with NFPA
No reproduction or networking permitted without license from IHS
Not for Resale

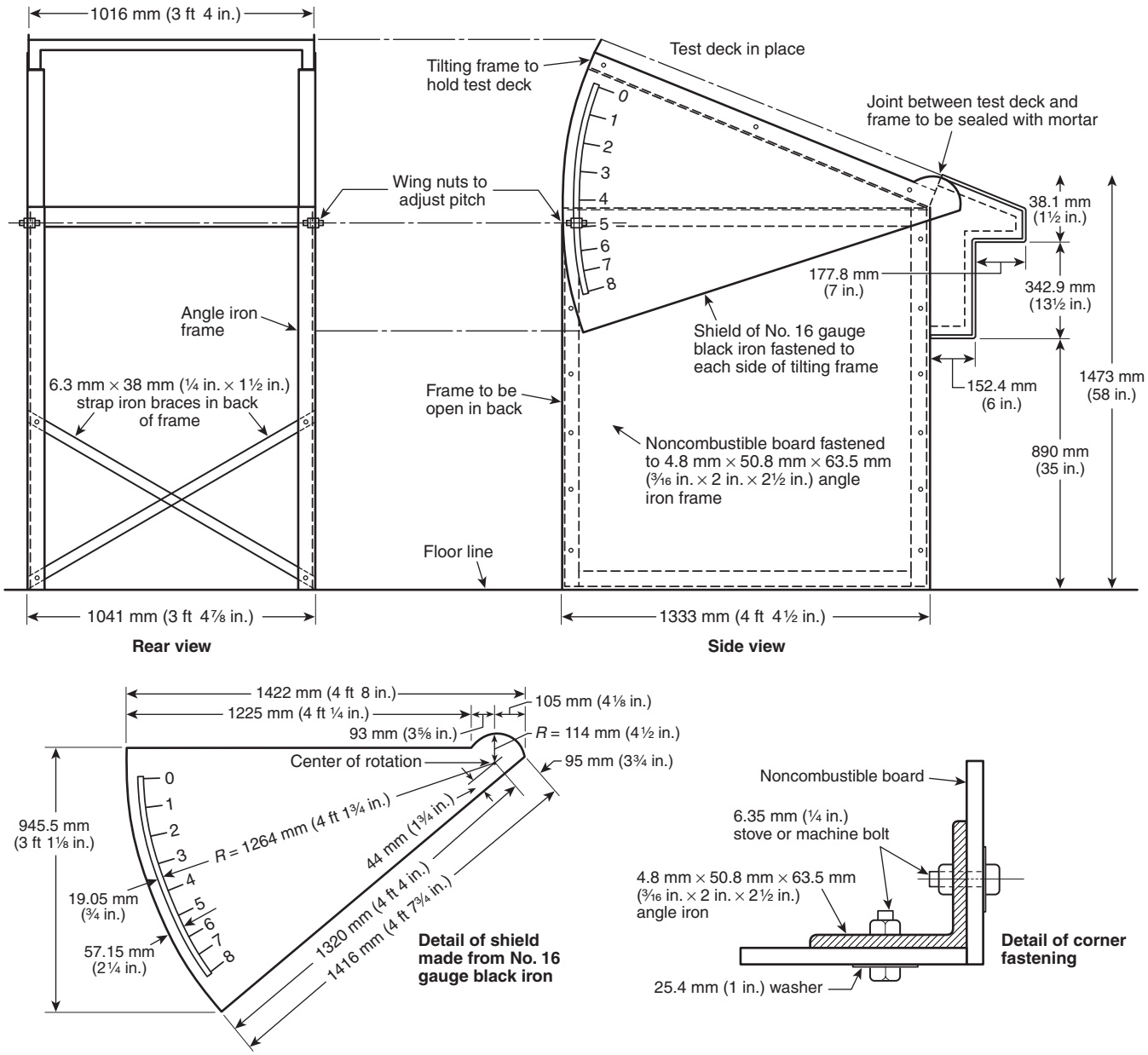


**FIGURE 4.1.1(b) Detail of Tilting Frame to Hold Test Roof Deck.**



Copyright National Fire Protection Association
Provided by IHS under license with NFPA
No reproduction or networking permitted without license from IHS
Not for Resale

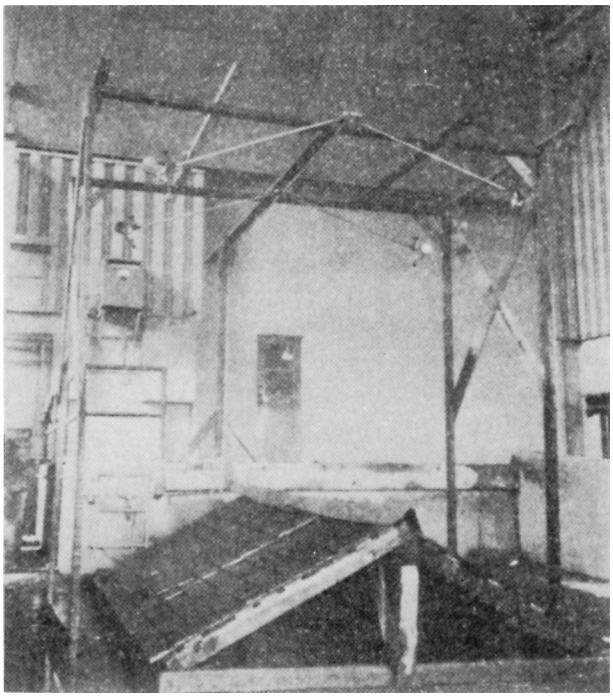

**FIGURE 4.1.2 Rain Test Apparatus.**

**4.2.1** Free outlet to outside air beyond and above the test apparatus shall be provided to exhaust air introduced into the test room by the blower.

**4.2.2** All openings into the test room other than those mentioned in 4.1.1, such as doors and windows, shall be closed.

**4.3 Supply Air.** The temperature of the room shall be between 10°C and 32.2°C (50°F and 90°F).

## Chapter 5 Calibration

**5.1 Air Current.**

**5.1.1** The test apparatus shall be set up for the intermittent flame test, and a smooth, noncombustible calibration deck 1320 mm (52 in.) long shall be positioned on the framework at an incline of 0.416:1 [127 mm (5 in.) per horizontal 305 mm (12 in.)].

**5.1.2** The air velocity shall be measured in three locations: midway up the slope of the calibration deck, at its center, and 76 mm (3 in.) from each edge.

**5.1.3** The center of the air-measuring device shall be positioned 95 mm ± 3 mm (3¾ in. ± ⅛ in.) above the surface.

**5.1.4** The airflow through and around the instrument shall be as free and undisturbed as possible.

**5.1.5** The air supply system shall be adjusted to produce a 1-minute average velocity of 5.36 m ± 0.2 m/sec (1056 ft/min ± 44 ft/min) at each of the three locations detailed in 5.1.2.

**5.2 Flame Temperature.**

**5.2.1** The test apparatus shall be set up for the intermittent flame test in accordance with 5.1.1, and the air velocity shall be adjusted in accordance with 5.1.5.

**5.2.2** The flame temperature shall be measured with a 1.6 mm diameter (No. 14 gauge) Type K wire thermocouple located 25 mm (1 in.) above the surface and 13 mm (½ in.) toward the source of the flame from the lower front edge of the calibration deck.

**5.2.3** The gas flow shall be adjusted to produce a 2-minute average flame temperature of 760°C ± 28°C (1400°F ± 50°F) for Class A and Class B tests, and 704°C ± 28°C (1300°F ± 50°F) for Class C tests.

**(A)** The response of the thermocouple to the test flame shall be allowed to stabilize before the 2-minute average flame temperature is measured.

**(B)** The average flame temperature shall be based on readings taken at 5-second intervals.

**5.2.4** The top surface of the leading edge of the calibration deck shall be flush with the top edge of the simulated eave within a tolerance of 0 mm ± 13 mm (0 in. ± ½ in.).

**5.2.5** Upon satisfying the conditions in Chapter 4, Section 5.1, and 5.2.1 through 5.2.4, the conditions in 5.2.5(A) through 5.2.5(C) shall be observed.

**(A)** The flame shall extend the width of the calibration deck at its bottom edge.

**(B)** The top surface of the calibration deck shall be uniformly bathed in flame except for the two upper corners.

**(C)** The flame shall extend to the upper edge of the calibration deck with licks of flame extending another 300 mm to 600 mm (12 in. to 24 in.).

**5.3 Rain Test.**

**5.3.1** The horizontal projected area over which each nozzle discharges water to the nearest 0.1 $m^2$ (1 $ft^2$) shall be measured.

**5.3.2** The discharge of water for each nozzle shall be measured for 1 minute.

**5.3.3*** The total water utilized during the test shall be monitored.

**5.3.4** For a 7-day cycle, the water usage shall be 2974 $L/m^2$ ± 40 $L/m^2$ (73 U.S. $gal/ft^2$ ± 1.7 U.S. $gal/ft^2$) or 17.7 $L/m^2/hr$ (0.435 U.S. $gal/ft^2/hr$).

**5.4 Frequency of Calibration.**

**5.4.1** The apparatus shall be calibrated for air velocity and flame temperature prior to each day's use.

**5.4.2** The apparatus shall be calibrated for flame temperature when shifting from Class A or B to Class C tests or vice versa.

**5.4.3** Any indication of off-limit condition, such as unusual flame appearance or flame contour, excess turbulence, unusual noise, and other conditions, shall be cause for calibration prior to further use.

**5.4.4** The water flow from each nozzle shall be checked visually for obvious water obstruction in the nozzle and uneven spray pattern each day during the water cycle, and adjustments shall be made when necessary.

**5.4.5** A review of the total water flow shall be made at the end of each day and at the end of each water cycle.

**5.4.6** The cause of any off-limit conditions shall be corrected.



--`,,,-`-`,,`,,`,`,,`---

Copyright National Fire Protection Association
Provided by IHS under license with NFPA
No reproduction or networking permitted without license from IHS
Not for Resale

## Chapter 6 Preparation of Test Specimens

**6.1 Construction of Test Decks.** The test decks shall be constructed as illustrated in Figure 6.1(a), Figure 6.1(b), and Figure 6.1(c).

**6.1.1** The test deck for the intermittent flame exposure, burning brand tests, flying brand test, rain test, and weathering test shall be one of the following:

(1) 1020 mm × 1320 mm (40 in. × 52 in.), and made of No. 1 white pine lumber with a moisture content of at least 8 percent and not more than 12 percent
(2) As specified in 6.1.2 through 6.1.5

**6.1.1.1** The lumber shall be free of large or loose knots, sapwood, rot, or pitch pockets, and shall contain no edge knots.

**6.1.1.2** Individual deck boards shall be of nominal 25 mm × 200 mm (1 in. × 8 in.) lumber (S4S).

**6.1.1.3** The boards shall be laid across the shorter dimension of the test deck, spaced 6 mm (¼ in.) apart, and shall be nailed to two nominal 50 mm × 100 mm (2 in. × 4 in.) wood battens located under and flush with the outer edges of the deck, as shown in Figure 6.1(c).

**6.1.1.4** Decks so constructed shall be even and uniform.

**6.1.2** Where the roof covering is intended to be installed over other than solid deck, the test decks shall be constructed of nominal 25 mm × 100 mm (1 in. × 4 in.) lumber (S4S) spaced a minimum of 41 mm (1⅝ in.) apart and shall be nailed to two nominal 50 mm × 100 mm (2 in. × 4 in.) wood battens. The lumber shall be of the same quality as specified in 6.1.1.

**6.1.3** Roof coverings shall be permitted to be applied to panel-type test decks such as plywood, waferboard, particleboard, or oriented strandboard in the minimum thickness recommended by the manufacturer.

**6.1.3.1** This deviation shall be noted in the report.

**6.1.3.2** Plywood, if used, shall be exterior Type C-C plugged or higher grade, conforming to PS1, *Construction and Industrial Plywood*.

**6.1.3.3** These decks shall have 3 mm (⅛ in.) vertical and horizontal joints located as specified in 6.1.4 through 6.1.5.3 with all vertical joints centered on nominal 50 mm × 100 mm (2 in. × 4 in.) wood battens.

**6.1.3.4** If wood battens or tongue-and-groove joints are specified for horizontal joints, it shall be so noted in the test reports.

**6.1.4** Decks constructed of panel-type material for intermittent flame tests shall have a 3 mm (⅛ in.) horizontal joint 203 mm (8 in.) from and parallel to the 1020 mm (40 in.) long leading edge.

**6.1.4.1** In addition, a 3 mm (⅛ in.) vertical joint centered on the deck and extending from the leading edge of the deck to the 3 mm (⅛ in.) horizontal joint shall be provided.

**6.1.4.2** Since the lower 38 mm (1½ in.) of this joint is not protected by the 50 mm × 100 mm (2 in. × 4 in.) batten, due to the mounting arrangement on the carriage, the underside of this joint shall be covered from the end of the 50 mm × 100 mm (2 in. × 4 in.) to the leading edge of the deck by a piece of sheet steel, nominally 50 mm (2 in.) in width.

**6.1.5** For Class A and Class B burning brand tests on decks other than nominal 25 mm × 200 mm (1 in. × 8 in.) lumber, the 3 mm (⅛ in.) horizontal joint shall be 570 mm (22 in.) from and parallel to the leading edge of the deck.

**6.1.5.1** Class A test decks shall have a 3 mm (⅛ in.) vertical joint, centered on the deck, that extends above the horizontal joint.

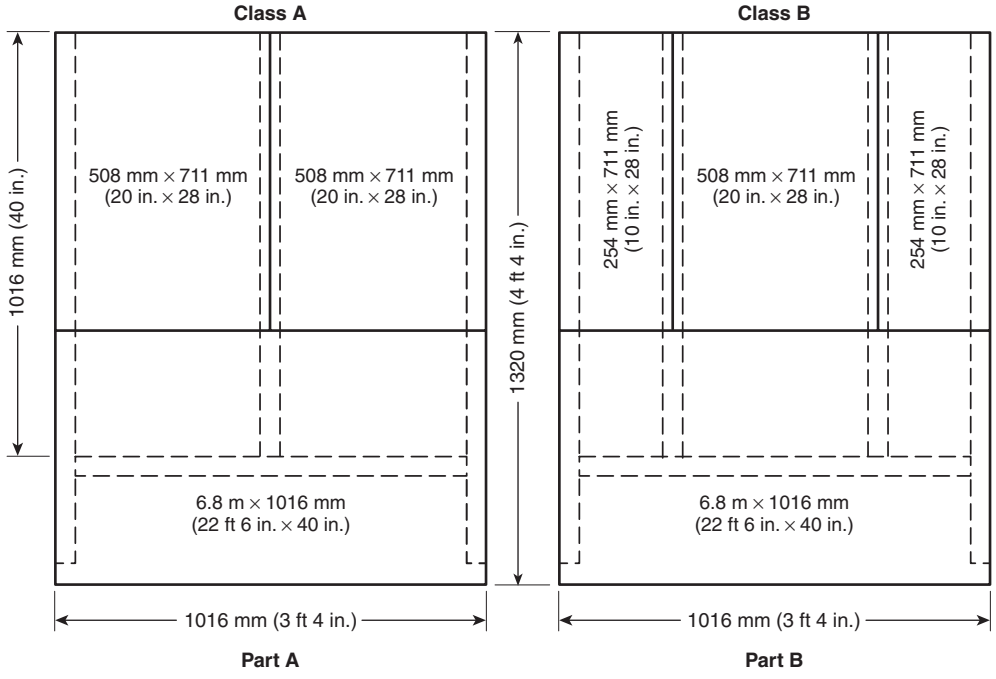


**FIGURE 6.1(a) Test Deck Construction for Plywood Deck Burning Brand Tests. Plywood overhangs nominal 2 × 4s by 1 in. at leading edge. Dotted lines indicate nominal 2 × 4 supports. Plywood joint width, 3 mm (⅛ in.).**



Copyright National Fire Protection Association
Provided by IHS under license with NFPA
No reproduction or networking permitted without license from IHS
Not for Resale

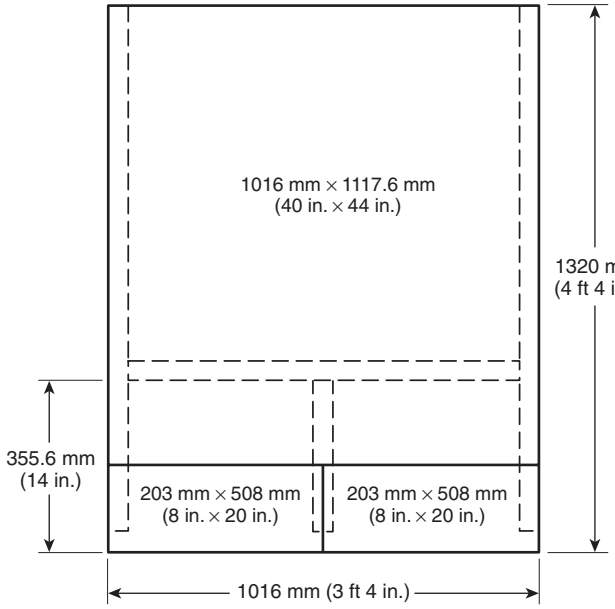


**FIGURE 6.1(b) Test Deck Construction for Plywood Deck Intermittent Flame Tests, Class A or Class B. Plywood overhangs nominal 2 × 4s by 1¼ in. at leading edge. Dotted lines indicate nominal 2 × 4 supports. Plywood joint width, 3 mm (⅛ in.).**

**6.1.5.2** For Class B test decks, two 3 mm (⅛ in.) vertical joints, extending above the horizontal joint with each vertical joint located 250 mm (10 in.) from and parallel to the edge of the deck, shall be provided.

**6.1.5.3** For a Class C burning brand test, five evenly spaced horizontal joints, with a minimum width of 3 mm (⅛ in.) between joints in the plywood, shall be provided.

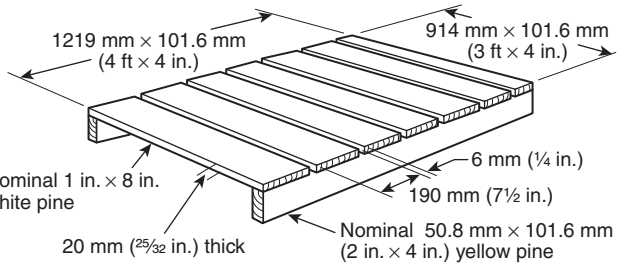


**FIGURE 6.1(c) Construction of Test Deck for other than Wood Shingles and Shakes.**

**6.1.6** For the spread of flame tests, the deck shall be constructed in the same manner as specified for the intermittent flame test, except that the vertical and horizontal joints need not be provided, and the length of the deck shall be as specified in 6.1.6.1.

**6.1.6.1** The length of the test deck shall be 4000 mm (156 in.) for Class C tests, 2700 mm (108 in.) for Class B tests, and 2400 mm (96 in.) for Class A tests.

**6.1.6.2** For tests of materials intended to be installed only over noncombustible decks, a noncombustible deck of the applicable length as specified in 6.1.6.1 shall be permitted to be used.

**6.1.6.3** This deviation shall be noted in the report.

**6.2 Application of Roofing on Test Roof Deck.**

**6.2.1** Representative samples of roof-covering materials shall be applied to test roof decks as specified in Table 6.2.1.

**6.2.2** The roof-covering materials under investigation shall be applied in accordance with the manufacturer's instructions and shall extend to and be flush with the edges of the test roof deck.

**6.2.3** A 25 mm (1 in.) overhang shall be permitted at the leading edge of the test roof deck.

**Table 6.2.1 Required Tests and Test Assemblies**

| | Minimum Required Number of Test Assemblies | | | | | |
|---|---|---|---|---|---|---|
| **Material to Be Tested** | **Intermittent Flame Test** | **Spread of Flame Test** | **Burning Brand Test** | **Flying Brand Test** | **Rain Test** | **Weathering Test** |
| Other than wood shakes or shingles, for installation on combustible decks | | | | | | |
| Class A | 2 | 2 | 4 | NA[a] | NA | NA |
| Class B | 2 | 2 | 2 | NA | NA | NA |
| Noncombustible decks only[b] | NA | 2 | NA | NA | NA | NA |
| Wood shakes and shingles[c] | | | | | | |
| Class A | 3 (2) [5] | 3 | 6 (2) [5] | 3 (2) [5] | 6 | 15 |
| Class B or Class C | 3 (2) [5] | 3 | 3 (2) [5] | 3 (2) [5] | 6 | 15 |

Note: Where roof-covering materials exhibit variable performance, more than the minimum number of test decks are subject to being required.

[a]NA — Test is not required.

[b]The flying brand, rain, and weathering tests are subject to being required. *(See Section 11.1, 12.1.1, and Section 13.1.)*

[c]Number in parentheses is number of samples from rain test to be tested. Number in brackets is number of samples from weathering test to be tested.



Copyright National Fire Protection Association
Provided by IHS under license with NFPA
No reproduction or networking permitted without license from IHS
Not for Resale

**6.3 Storage and Conditioning of Test Roof Decks.**

**6.3.1** The completed test roof decks shall be stored indoors at a temperature of not less than 16°C (60°F) and not greater than 32°C (90°F).

**6.3.2** The completed test roof decks shall be conditioned to a constant mass.

**6.3.3** The moisture content of the sample shall be measured and recorded immediately prior to the test.

## Chapter 7 General Conditions

**7.1 Tests.** The required tests, the applicable number of test decks, and the types of test assemblies shall be in accordance with Table 6.2.1.

**7.2* Mortar.** In the fire tests described in Chapters 8 through 11, mortar (cementitious mixture, lime, and water) shall be troweled into the joint formed by the leading edge of the roof-covering material and the framework of the carriage.

**7.3 Air Current.** In these tests, all decks shall be subjected to an air current as calibrated in 5.1.1 through 5.1.5.

**7.4 Roof Coverings.** Prepared roof coverings shall be tested at a slope of 0.416:1 [127 mm (5 in.) per horizontal 305 mm (12 in.)].

**7.5 Built-up Coverings.** Built-up roof coverings shall be tested at the maximum slope recommended by the manufacturer, but shall not exceed 0.416:1 [127 mm (5 in.) per horizontal 305 mm (12 in.)].

**7.6 Slope.** The slope used shall be noted in the report.

## Chapter 8 Intermittent Flame Exposure Test

**8.1 General.**

**8.1.1** This test shall be performed on a minimum of two test decks.

**8.1.2** Where the roof-covering materials exhibit a variable performance, more than two test decks shall be required.

**8.2 Procedure.**

**8.2.1** A test deck 1320 mm (52 in.) long shall be mounted on the framework at the required incline *(see Sections 7.4 through 7.6)*, and the blower shall be adjusted to produce the specified air current.

**8.2.2** The test deck shall be subjected to a luminous gas flame, as calibrated in accordance with Section 5.2.

**8.3 Application of Flame.** The flame shall be applied intermittently for the specified periods and specified time intervals between applications, as indicated in Table 8.3.

**8.4 Air Current.**

**8.4.1** The air current shall be maintained throughout the test and after the last application of flame, until all evidence of flame, glow, and smoke has disappeared from both the exposed surface of the material being tested and the underside of the test deck, or until failure occurs.

**Table 8.3 Flame Applications**

| Method of Test | Flame On (min) | Flame Off (min) | Number of Test Cycles |
|---|---|---|---|
| Class A | 2 | 2 | 15 |
| Class B | 2 | 2 | 8 |
| Class C | 1 | 2 | 3 |

**8.4.2** In no case shall the air current or test duration be maintained for more than 1 hour after the last flame cycle for a Class A or B test, or ½ hour after the last flame cycle for a Class C test.

**8.5 Observations.** During and after the intermittent flame test, including "on" and "off" periods of flame application, observations shall be made for the following conditions:

(1) Appearance of sustained flaming on the underside of the test deck
(2) Production of flaming or glowing brands
(3) Displacement of portions of the test sample
(4) Exposure or falling away of portions of the roof deck

## Chapter 9 Spread of Flame Test

**9.1 General.**

**9.1.1** This test shall be performed on a minimum of two test decks.

**9.1.2** Where the roof-covering materials exhibit a variable performance, more than two test decks shall be required.

**9.2 Procedure.** A test deck of a length specified in 6.1.6.1 shall be mounted in the same manner and shall use a luminous gas flame, as described in Section 8.2, for the intermittent flame tests.

**9.3 Application of Flame.**

**9.3.1** For Class A and Class B tests, the gas flame shall be applied continuously for 10 minutes or until the flame (actual flaming of the material being tested) permanently recedes from a point of maximum spread, whichever is shorter.

**9.3.2** For a Class C test, the gas flame shall be applied for a period of 4 minutes, or until recession occurs, and then it shall be removed.

**9.4 Observations.** During the application of the test flame, the test sample shall be observed for the following conditions:

(1) Distance to which flaming of the material has spread
(2) Production of flaming or glowing brands
(3) Displacement of portions of the test sample

## Chapter 10 Burning Brand Test

**10.1 General.**

**10.1.1** This test shall be performed on a minimum of four test decks for Class A fire test exposure, and two test decks for Class B or Class C fire test exposure.

**10.1.2** Where the roof covering materials exhibit a variable performance, more than the minimum number of test decks shall be required.



--`,,`-`-`,,`,,`,`,,`---
Copyright National Fire Protection Association
Provided by IHS under license with NFPA
No reproduction or networking permitted without license from IHS
Not for Resale

**10.2 Procedure.**

**10.2.1** A 1320 mm (51 in.) long test deck shall be mounted in the manner specified in Section 8.2 for the intermittent flame test.

**10.2.2** The framework shall be 1520 mm (60 in.) from the air duct outlet *[see Figure 4.1.1(a)]*, and the gas piping and burner shall be removed so as not to obstruct the airflow.

**10.3 Size and Construction of Brands.**

**10.3.1 General.**

**(A)** The brands shall be constructed as follows in 10.3.2 through 10.3.4 and in Figure 10.3.1.

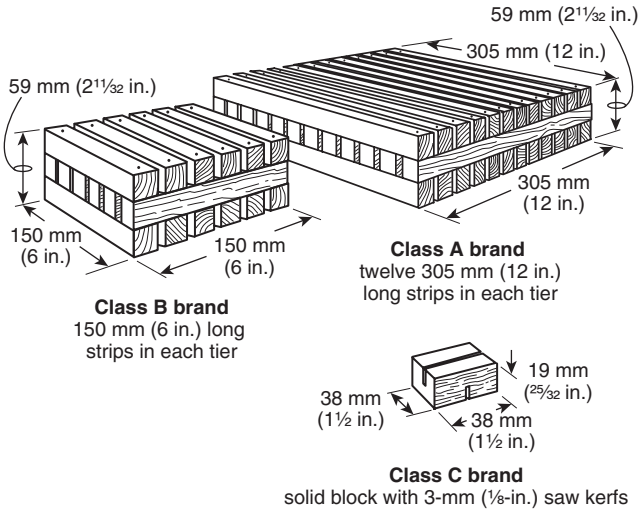


**FIGURE 10.3.1 Brands for Class A, B, and C Tests.**

**(B)** The brands shall be conditioned in an oven with temperatures between 55°C and 48.9°C (105°F and 120°F) for at least 24 hours.

**10.3.2* Class A Test Brand.**

**10.3.2.1** The Class A test brand shall consist of a grid 305 mm (12 in.) square and a 59 mm (2 11/32 in.) thickness, made of dry Douglas fir lumber, free of knots and pitch pockets.

**10.3.2.2** The following materials shall be used: 36 nominal 25 mm × 25 mm × 305 mm (1 in. × 1 in. × 12 in.) strips, dressed on all four sides to 19 mm × 19 mm (¾ in. × ¾ in.) and placed in three layers of 12 strips each, with strips spaced 6 mm (¼ in.) apart.

**10.3.2.3** These strips shall be placed at right angles to those in adjoining layers and shall be nailed at each end of each strip on one face and in a diagonal pattern (as shown in Figure 10.3.1) on the other face.

**10.3.2.4** The dry weight of the finished brand shall be 2000 g ± 150 g (70.5 oz. ± 5.3 oz.) at time of test.

**10.3.3* Class B Test Brand.**

**10.3.3.1** The Class B test brand shall consist of a grid 150 mm (6 in.) square and a 59 mm (2 11/32 in.) thickness, made of dry Douglas fir lumber, free of knots and pitch pockets.

**10.3.3.2** The following materials shall be used: 18 nominal 25 mm × 25 mm × 150 mm (1 in. × 1 in. × 6 in.) strips, dressed on all four faces to 19 mm × 19 mm (¾ in. × ¾ in.) and placed in three layers of 6 strips each, with strips placed 6 mm (¼ in.) apart.

**10.3.3.3** These strips shall be placed at right angles to those in adjoining layers and shall be nailed at each end of each strip on one face and in a diagonal pattern (as shown in Figure 10.3.1) on the other face.

**10.3.4 Class C Test Brand.**

**10.3.4.1** The Class C test brand shall consist of a piece of dry, nonresinous, white pine lumber, free of knots and pitch pockets, 38 mm × 38 mm × 19 mm (1½ in. × 1½ in. × 25/32 in.) thick, with a saw kerf 3 mm (⅛ in.) wide, one-half the thickness of the brand across the center of the top and bottom faces.

**10.3.4.2** The saw kerf on opposite faces shall be at right angles to each other.

**10.3.4.3** The dry weight of the finished brand shall be 9 g ± 1 g (0.3 oz. ± 0.03 oz.) at time of test.

**10.4 Ignition of Brands.**

**10.4.1** Before application to the test deck, the brands shall be ignited so as to burn freely in still air.

**10.4.2** The brands shall be considered to be free burning after they have been subjected to the flame of a gas burner of such size that, during the process of ignition, the brands are nearly enveloped in the burner flame.

**10.4.3** The flame temperature of the igniting flame shall be 887°C ± 28°C (1630°F ± 50°F) and shall be measured with a 1.6 mm diameter (No. 14 gauge) Type K thermocouple 59 mm (2 5/16 in.) above the top of the burner, which shall be shielded from drafts.

**10.4.4** The test brands shall be subjected to the required size of flame of the gas burner for the following periods of time.

**(A)** Class A test brands shall be exposed to the flame for 5 minutes, during which time they shall be rotated so as to expose each surface to the flame in the following manner and sequence:

(1) Each 305 mm × 305 mm (12 in. × 12 in.) face for 30 seconds
(2) Each 59 mm × 305 mm (2 11/32 in. × 12 in.) face for 45 seconds
(3) Each 305 mm × 305 mm (12 in. × 12 in.) face again for 30 seconds

**(B)** Class B test brands shall be exposed to the flame for 4 minutes, during which time they shall be rotated so as to expose each surface to the flame in the following manner and sequence:

(1) Each 150 mm × 150 mm (6 in. × 6 in.) face for 30 seconds
(2) Each 59 mm × 150 mm (2 11/32 in. × 6 in.) face for 30 seconds
(3) Each 150 mm × 150 mm (6 in. × 6 in.) face again for 30 seconds

**(C)** Class C test brands shall be exposed to the flame for 2 minutes, during which time they shall be rotated so as to expose each of the 38 mm × 38 mm (1½ in. × 1½ in.) faces to the flame for 1 minute.

**10.5 Test Conditions.**

**10.5.1 Class A Tests.**

**10.5.1.1** A brand shall be placed on the surface of each test deck at the location considered most vulnerable (point of minimum coverage over deck joint) with respect to ignition of the deck, but in no case shall it be closer than 100 mm (4 in.) from either side or 305 mm (12 in.) from the top or bottom edge of the deck.



Copyright National Fire Protection Association
Provided by IHS under license with NFPA
No reproduction or networking permitted without license from IHS
Not for Resale

**10.5.1.2** The brand shall be placed so that the strips in both the upper and lower layers are parallel to the direction of airflow, and the upper edge of the brand shall be located 75 mm (3 in.) above the horizontal joint in the test deck.

**10.5.1.3** The brand shall be secured to the deck by a 1.02 mm diameter (No. 18 gauge) soft iron wire.

**10.5.1.4** If the roof covering is being tested as applied to plywood or other panel-type decks, the brand shall be placed so that it is centered laterally with respect to the vertical panel joint in the test deck, and the upper edge of the brand shall be located 75 mm (3 in.) above the horizontal panel joint in the test deck.

**10.5.2 Class B Tests.**

**10.5.2.1** A brand shall be placed on the surface of the test deck at each of the two locations that are considered most vulnerable (point of minimum coverage over deck joint) with respect to ignition of the deck.

**10.5.2.2** Each brand shall be positioned with its upper edge 38 mm (1½ in.) above the selected joint in the deck boards, but in no case shall it be closer than 150 mm (6 in.) from each side or 305 mm (12 in.) from the top or bottom edge of the deck.

**10.5.2.3** The brands shall be placed so that the strips in both the upper and lower layers are parallel to the direction of airflow.

**10.5.2.4** The brands shall be secured to the deck by a 1.02 mm diameter (No. 18 gauge) soft iron wire.

**10.5.2.5** The second brand shall be applied 30 minutes after placing of the first brand, or sooner if all burning resulting from the first brand has ceased.

**10.5.2.6** If the roof covering is applied to plywood or other panel-type decks, the brands shall be placed so that they are centered laterally with respect to the vertical panel joints in the test deck, and the upper edge of the brands shall be located 38 mm (1½ in.) above the horizontal panel joint in the test deck.

**10.5.3 Class C Tests.**

**10.5.3.1** At 1-minute to 2-minute intervals, a brand shall be placed on the surface of the test deck at each of the 20 locations that are considered most vulnerable (points of minimum coverage over deck joints) with respect to ignition of the deck.

**10.5.3.2** Each brand shall be positioned with its upper edge 13 mm (½ in.) above the selected joint in the deck boards, but in no case shall it be closer than 150 mm (6 in.) from each side or 305 mm (12 in.) from the top or bottom edge of the deck.

**10.5.3.3** No brand shall be placed closer than 100 mm (4 in.) from a point where a previous brand was located.

**10.5.3.4** The brands shall be secured by a 1.02 mm diameter (No. 18 gauge) soft iron wire stretched across the width of the deck and placed in the saw kerf of the brand.

**10.5.3.5** The saw kerf on the deck side of the brand shall be parallel to the direction of airflow.

**10.5.3.6** In addition to 10.5.3.1 through 10.5.3.5, where the roof covering comprises lapped courses, no brand shall be placed closer than 13 mm (½ in.) from the bottom edge of the lapped course above, nor shall it be closer than 50 mm (2 in.) from a joint in the roof-covering material in the same course.

**10.5.3.7** Loose or unfastened portions of the roof covering that can be bent up to 90 degrees without injury to fastenings holding other portions of roof covering shall be cut away.

**10.5.3.8** If the roof covering is applied to plywood or other panel-type decks, the brands shall be placed so that as many of the 20 brands as possible are centered over panel joints in the test deck.

**10.5.3.9 Treated Wood Products.**

**(A)** For treated wood shingles, 20 ignited brands shall be placed on each deck at 1- or 2-minute intervals.

**(B)** For treated wood shakes, 20 ignited brands shall be distributed at 1- or 2-minute intervals on each pair of decks.

**(C)** Each brand shall be centered over the 6 mm (¼ in.) joint 13 mm (½ in.) below the butt of the shake or shingle in the course above.

**(D)** No brand shall be placed closer than 100 mm (4 in.) from the point where a previous brand was located.

**(E)** Positioning and securing of brands shall otherwise be in accordance with 10.5.3.1.

**10.6 Duration of the Test.** Each test, whether Class A, Class B, or Class C, shall be continued until the brand is totally consumed and until all evidence of flame, glow, and smoke has disappeared from both the exposed surface of the material being tested and the underside of the test deck, or until failure occurs, but shall not be continued for more than 1 hour.

**10.7 Test Results.**

**10.7.1** The results of tests in which the brands do not show progressive and substantially complete consumption after application to the test deck shall be disregarded.

**10.7.2** If brands are replaced, they shall not be located in the same area as the discarded brand.

**10.8 Observations.** During and after the burning brand tests, observations shall be made for the following conditions:

(1) Appearance of sustained flaming on the underside of the test deck
(2) Production of flaming or glowing brands of roof covering material
(3) Displacement of the test sample
(4) The exposure or falling away of portions of the roof deck

## Chapter 11 Flying Brand Test

**11.1 General.** This test shall be performed where there is a possibility that during the test exposure the roof covering will break into flaming particles that support combustion on the floor. *(See Table 6.2.1.)*

**11.2 Procedure.** A test deck 1320 mm (52 in.) long shall be mounted, and a luminous gas flame shall be used as specified in Section 8.2 for the intermittent flame test.

**11.3 Application of Flame.**

**11.3.1** The Class A and Class B test gas flame shall be applied continuously for 10 minutes.

**11.3.2** The Class C test gas flame shall be applied continuously for 4 minutes.



Copyright National Fire Protection Association
Provided by IHS under license with NFPA
No reproduction or networking permitted without license from IHS
Not for Resale

**11.4 Air Current.**

**11.4.1** The 5.36 m/sec (12 mph) air current shall be maintained until all evidence of flame, glow, and smoke has disappeared from the exposed surface of the material being tested, to determine if flying brands will develop.

**11.4.2** On treated wood shakes, the velocity of the air current shall be increased to 8.0 m/sec ± 0.3 m/sec (18.0 mph ± 0.75 mph) after the gas flame is extinguished.

## Chapter 12 Rain Test

**12.1* General.**

**12.1.1** The rain test shall be conducted where the fire-retardant characteristics of the roof covering are adversely affected by water.

**12.1.2** Asphalt shingles meeting the requirements of ASTM D 225, *Standard Method for Steam Distillation of Bituminous Protective Coatings*, ASTM D 3018, *Standard Specification for Class A Asphalt Shingles Surfaced with Mineral Granules,* or UL 55B, *Class C Asphalt Organic-Felt Sheet Roofing and Shingles*, and slate, concrete, clay tile, and metal roofing that have been shown not to be adversely affected by prolonged exposure to the weather shall be exempt from the rain test.

**12.1.3** This test shall be conducted on six test decks. *(See Table 6.2.1.)*

**12.2 Procedure.**

**12.2.1** Test decks 1320 mm (52 in.) long shall be mounted in a framework at a slope of 0.33:1 [100 mm (4 in.) per horizontal 300 mm (12 in.)].

**12.2.2** At 2130 mm (7 ft) above the test decks, spray nozzles shall be mounted that deliver an average of 17.8 mm (0.7 in.) of water per hour at a temperature between 2.0°C and 15.5°C (35°F and 60°F) for the test deck area.

**12.3 Application of Water.**

**12.3.1** The test decks shall be exposed to 12 one-week cycles.

**12.3.2** Each cycle shall consist of 96 hours of water exposure and 72 hours of drying time at 60°C (140°F).

**12.3.3** An alternative test cycle shall be permitted to be utilized, at the manufacturer's option, whereby two sets of six decks shall be alternately exposed to 7 days (168 hours) of water exposure, followed by 2 days (48 hours) draining, and 5 days (120 hours) drying at 60°C (140°F).

**12.3.3.1** This cycle shall be repeated seven times.

**12.3.3.2** The seventh water exposure shall be reduced to 6 days (144 hours).

**12.3.4** The final drying cycle shall be controlled so that the moisture content of the deck lumber is between 8 percent and 12 percent.

**12.3.5** The intermittent flame, burning brand, and the flying brand tests shall then be repeated.

## Chapter 13 Weathering Test

**13.1 General.** This test shall apply to materials or constructions where the fire-retardant characteristics of the roof covering are adversely affected by weather. *(See Table 6.2.1.)*

**13.2 Test Conditions.** The test shall be conducted on 1020 mm × 1320 mm (40 in. × 52 in.) test decks that shall be mounted outdoors facing south at an incline of 0.416:1 [127 mm (5 in.) per horizontal 305 mm (12 in.)].

**13.3 Conditioning.** After one, two, three, five, and ten years of exposure, three test decks shall be brought indoors and conditioned until the deck lumber attains a moisture content between 8 percent and 12 percent.

**13.4 Plywood Decks.** For plywood decks, the moisture content shall be not greater than 8 percent.

**13.5 Testing.** These decks shall then be subjected to intermittent flame, burning brand, and flying brand tests. *(See Table 6.2.1.)*

## Chapter 14 Conditions of Classification

**14.1 Conditions to Be Met.** When subjected to a Class A, B, or C fire test, as defined in 1.3.1, a roof-covering material shall meet the conditions in 14.1.1 through 14.1.7.

**14.1.1** At no time during or after the intermittent flame, spread of flame, or burning brand tests shall the following conditions exist:

(1) Any portion of the roof covering material be blown off or fall off the test deck in the form of flaming or glowing brands that continue to glow after reaching the floor
(2) The roof deck be exposed
(3) Portions of the roof deck fall away in the form of particles that continue to glow after reaching the floor

**14.1.2** At no time during Class A, Class B, or Class C intermittent flame and burning brand tests shall there be sustained flaming of the underside of the deck.

**14.1.3** If flaming of the underside of the deck does occur, another series of tests shall be conducted during which no sustained flaming shall occur.

**14.1.4** At the conclusion of the spread of flame tests, the flaming shall not have spread beyond 1820 mm (6 ft) for Class A, 2440 mm (8 ft) for Class B, or 3960 mm (13 ft) (the top of the deck) for Class C.

**14.1.5** There shall have been no significant lateral spread of flame from the path directly exposed to the test flame.

**14.1.6** In the flying brand test, no flying, flaming brands or particles that continue to glow after reaching the floor shall be produced.

**14.1.7** For roof covering materials intended only for use on noncombustible decks, exposure of the roof deck during the spread of flame test shall not constitute failure.

## Chapter 15 Report of Results

**15.1 Data.** The following shall be reported for each test specimen:

(1) Description of the roof covering being tested, including construction details of the test deck, manufacturer's application limits, shelf life of the roof covering, and other relevant information
(2) Storage conditions of the test roof deck



Copyright National Fire Protection Association
Provided by IHS under license with NFPA
No reproduction or networking permitted without license from IHS
Not for Resale

(3) Moisture content of the test deck materials and roof-covering materials (if moisture absorbing) at the time of testing
(4) Type and class of test
(5) Slope of the test deck
(6) Details of the calibration including velocity measurements, flame temperature measurements, heat supply rate, and total water use for rain test
(7) Details of rain test cycle (if applicable)
(8) Observations of the burning characteristics of the test deck during and after test exposure as detailed in Sections 8.5, 9.4, 10.8, and Chapters 11 and 14
(9) Class of the roof covering (Class A, B, or C)
(10) Climate conditions of the region where the weathering exposure was conducted by average temperature, wind velocity, and precipitation

## Annex A Explanatory Material

*Annex A is not a part of the requirements of this NFPA document but is included for informational purposes only. This annex contains explanatory material, numbered to correspond with the applicable text paragraphs.*

**A.1.1** The following methods are included in this standard:

(1) Intermittent Flame Exposure Test *(see Chapter 8)*
(2) Spread of Flame Test *(see Chapter 9)*
(3) Burning Brand Test *(see Chapter 10)*
(4) Flying Brand Test *(see Chapter 11)*
(5) Rain Test *(see Chapter 12)*
(6) Weathering Test *(see Chapter 13)*

**A.4.1.1** An air velocity meter — any direct reading instrument with a scale graduated in increments of not more than 6 m/min (20 ft/min) or any timed instrument with a scale graduated in increments of not more than 6 m/min (20 ft/min) for a timed interval of 1 minute — should be used.

**A.5.3.3** A commercial water meter is suitable for the purpose.

**A.7.2** This mortar prevents air or the test flame from traveling under the material being tested.

**A.10.3.2** Nails used in the construction of Class A brands should be No. 16, 38 mm (1½ in.) long, bright, flat head, diamond point, wire nails. Sixty-eight nails weighing approximately 42 g (1.48 oz) should be used for Class A brands.

**A.10.3.3** Nails used in the construction of Class B brands should be No. 16, 38 mm (1½ in.) long, bright, flat head, diamond point, wire nails. Thirty-two nails weighing approximately 21 g (0.74 oz) should be used for Class B brands.

**A.12.1** The method referenced is described as Method A in ASTM D 2898, *Standard Test Methods for Accelerated Weathering of Fire-Retardant-Treated Wood for Fire Testing.*

## Annex B Informational References

**B.1 Referenced Publications.** The following documents or portions thereof are referenced within this standard for informational purposes only and are thus not part of the requirements of this document unless also listed in Chapter 2.

**B.1.1 NFPA Publications. (Reserved)**

**B.1.2 Other Publications.**

**B.1.2.1 ASTM Publication.** American Society for Testing and Materials, 100 Barr Harbor Drive, West Conshohocken, PA 19428-2959.

ASTM D 2898, *Standard Test Methods for Accelerated Weathering of Fire-Retardant-Treated Wood for Fire Testing*, 1999.

**B.2 Informational References. (Reserved)**

**B.3 References for Extracts. (Reserved)**



Copyright National Fire Protection Association
Provided by IHS under license with NFPA
No reproduction or networking permitted without license from IHS
Not for Resale

# Index

© 2003 National Fire Protection Association. All Rights Reserved.

The copyright in this index is separate and distinct from the copyright in the document that it indexes. The licensing provisions set forth for the document are not applicable to this index. This index may not be reproduced in whole or in part by any means without the express written permission of NFPA.

**-A-**

**Air current** ..... 7.3
Calibration ..... 5.1
Flying brand test ..... 11.4
Intermittent flame exposure test ..... 8.4
**Air, supply** ..... 4.3
**Air temperature** ..... 4.3
**Air velocity meter** ..... 4.1.1, A.4.1.1
**Apparatus, test** ..... 4.1, A.4.1.1
**Application of standard** ..... 1.3

**-B-**

**Brands** .....*See* Burning brand test; Flying brand test
**Built-up roof coverings** ..... 7.5
**Burning brand test** ..... Chap. 10
Conditions of classification ..... 14.1.1 to 14.1.3
Construction ..... Fig. 6.1(a)
Duration ..... 10.6
Ignition of brands ..... 10.4
Observations ..... 10.8
Procedure ..... 10.2
Results of tests ..... 10.7
Size and construction of brands ..... 10.3
Test conditions ..... 10.5

**-C-**

**Calibration** ..... Chap. 5
Air current ..... 5.1
Flame temperature ..... 5.2
Frequency of ..... 5.4
Rain test ..... 5.3
**Class A tests** ..... 15.1(9)
Applicability ..... 1.3.1(A)
Burning brand test ..... 6.1.5, 10.1.1, 10.3.2, 10.4.4(A), 10.5.1, 10.6, A.10.3.2
Conditions of classification ..... 14.1
Flame temperature ..... 5.2.3, 5.2.5, 5.4.2
Flying brand test ..... 11.3.1
Intermittent flame exposure test ..... Fig. 6.1(b), Table 8.3
Required tests and test assemblies ..... 6.1.6.1
Spread of flame test ..... 9.3.1
**Class B tests** ..... 15.1(9)
Applicability ..... 1.3.1(B)
Burning brand test ..... 6.1.5, 10.1.1, 10.3.3, 10.4.4(B), 10.5.2, 10.6, A.10.3.3
Conditions of classification ..... 14.1
Flame temperature ..... 5.2.3, 5.2.5, 5.4.2
Flying brand test ..... 11.3.1
Intermittent flame exposure test ..... Fig. 6.1(b), Table 8.3
Required tests and test assemblies ..... Table 6.2.1
Spread of flame test ..... 6.1.6.1, 9.3.1
**Class C tests** ..... 15.1(9)
Applicability ..... 1.3.1(C)
Burning brand test ..... 6.1.5.3, 10.1.1, 10.3.4, 10.4.4(C), 10.5.3, 10.6
Conditions of classification ..... 14.1
Flame temperature ..... 5.2.3, 5.2.5, 5.4.2
Flying brand test ..... 11.3.2
Intermittent flame exposure test ..... Table 8.3
Required tests and test assemblies ..... Table 6.2.1
Spread of flame test ..... 6.1.6.1, 9.3.2
**Classification, conditions of** ..... Chap. 14
**Conditions**
Of classification ..... Chap. 14
General ..... Chap. 7

**-D-**

**Decks, roof**
Application of roofing on ..... 6.2
Construction ..... 6.1
Noncombustible ..... 14.1.7
Storage and conditioning of ..... 6.3
Tilting frame for ..... Fig. 4.1.1(b)
**Definitions** ..... Chap. 3

**-E-**

**Equipment** .....*see* Apparatus, test

**-F-**

**Flame**
Temperature ..... 5.2
Test ..... 4.2
**Flame spread test** .....*see* Spread of flame test
**Flying brand test** ..... Chap. 11
Air current ..... 11.4
Application of flame ..... 11.3
Conditions of classification ..... 14.1.6
Procedure ..... 11.2
**Frame, tilting** ..... Fig. 4.1.1(b)

**-I-**

**Intermittent flame exposure test** ..... Chap. 8
Air current ..... 8.4
Application of flame ..... 8.3
Conditions of classification ..... 14.1.1 to 14.1.3
Construction of decks ..... Figs. 6.1(a), 6.1(b)
Observations ..... 8.5
Procedure ..... 8.2

**-M-**

**Measurement, units of** ..... 1.4
**Mortar** ..... 7.2, A.7.2

**-P-**

**Purpose of standard** ..... 1.2

**-R-**

**Rain test** ..... 5.3, Chap. 12
Apparatus ..... 4.1.2, Fig. 4.1.2
Application of water ..... 12.3
Exemptions ..... 12.1.2
Procedure ..... 12.2
**References** ..... Chap. 2, Annex B
**Reports of results** ..... 7.6, Chap. 15
**Roof coverings**
Application of ..... 6.2
Built-up ..... 7.5
Test slope ..... 7.4 to 7.6
**Roof decks** .....*see* Decks, roof



Copyright National Fire Protection Association
Provided by IHS under license with NFPA
No reproduction or networking permitted without license from IHS
Not for Resale

**-S-**

**Scope of standard** ..... 1.1
**Shall (definition)** ..... 3.2.1
**Should (definition)** ..... 3.2.2
**SI units** ..... 1.4
**Slope** ..... 7.4 to 7.6
**Specimens, preparation of** ..... Chap. 6
**Spread of flame test** ..... Chap. 9
Application of flame ..... 9.3
Conditions of classification ..... 14.1.1, 14.1.4, 14.1.5, 14.1.7
Observations ..... 9.4
Procedure ..... 9.2
**Standard (definition)** ..... 3.2.3
**Supply air** ..... 4.3

**-T-**

**Temperature**
Air ..... 4.3
Flame ..... 5.2
**Test decks** ..... *see* Decks, roof
**Test procedures, general** ..... Chap. 4; *see also* specific tests
**Tests, required** ..... Table 6.2.1, 7.1
**Treated wood products**
Burning brand test ..... 10.5.3.9
Flying brand test ..... 11.4.2

**-U-**

**Units of measurement** ..... 1.4

**-W-**

**Weathering test** ..... Chap. 13




Copyright National Fire Protection Association
Provided by IHS under license with NFPA
No reproduction or networking permitted without license from IHS
Not for Resale

## *Sequence of Events Leading to Publication of an NFPA Committee Document*

Call goes out for proposals to amend existing document or for recommendations on new document.

▼

Committee meets to act on proposals, to develop its own proposals, and to prepare its report.

▼

Committee votes on proposals by letter ballot. If two-thirds approve, report goes forward. Lacking two-thirds approval, report returns to committee.

▼

Report — *Report on Proposals* (ROP) — is published for public review and comment.

▼

Committee meets to act on each public comment received.

▼

Committee votes on comments by letter ballot. If two-thirds approve, supplementary report goes forward. Lacking two-thirds approval, supplementary report returns to committee.

▼

Supplementary report — *Report on Comments* (ROC) — is published for public review.

▼

NFPA membership meets (Annual or Fall Meeting) and acts on committee report (ROP or ROC).

▼

Committee votes on any amendments to report approved at NFPA Annual or Fall Meeting.

▼

Appeals to Standards Council on Association action must be filed within 20 days of the NFPA Annual or Fall Meeting.

▼

Standards Council decides, based on all evidence, whether or not to issue standard or to take other action, including upholding any appeals.

## *Committee Membership Classifications*

The following classifications apply to Technical Committee members and represent their principal interest in the activity of the committee.

M *Manufacturer:* A representative of a maker or marketer of a product, assembly, or system, or portion thereof, that is affected by the standard.

U *User:* A representative of an entity that is subject to the provisions of the standard or that voluntarily uses the standard.

I/M *Installer/Maintainer:* A representative of an entity that is in the business of installing or maintaining a product, assembly, or system affected by the standard.

L *Labor:* A labor representative or employee concerned with safety in the workplace.

R/T *Applied Research/Testing Laboratory:* A representative of an independent testing laboratory or independent applied research organization that promulgates and/or enforces standards.

E *Enforcing Authority:* A representative of an agency or an organization that promulgates and/or enforces standards.

I *Insurance:* A representative of an insurance company, broker, agent, bureau, or inspection agency.

C *Consumer:* A person who is, or represents, the ultimate purchaser of a product, system, or service affected by the standard, but who is not included in the *User* classification.

SE *Special Expert:* A person not representing any of the previous classifications, but who has a special expertise in the scope of the standard or portion thereof.

NOTES:

1. "Standard" connotes code, standard, recommended practice, or guide.
2. A representative includes an employee.
3. While these classifications will be used by the Standards Council to achieve a balance for Technical Committees, the Standards Council may determine that new classifications of members or unique interests need representation in order to foster the best possible committee deliberations on any project. In this connection, the Standards Council may make such appointments as it seems appropriate in the public interest, such as the classification of "Utilities" in the National Electrical Code Committee.
4. Representatives of subsidiaries of any group are generally considered to have the same classification as the parent organization.

Copyright National Fire Protection Association
Provided by IHS under license with NFPA
No reproduction or networking permitted without license from IHS
Not for Resale

# NFPA Technical Committee Document Proposal Form

**Note: All proposals must be received by 5:00 p.m. EST/EDST on the published proposal closing date.**

**For further information on the standards-making process, please contact Codes and Standards Administration at 617-984-7249. For technical assistance, please call NFPA at 617-770-3000.**

FOR OFFICE USE ONLY
Log #: _____
Date Rec'd: _____

**Please indicate in which format you wish to receive your ROP/ROC:** ☐ **CD ROM** ☐ **paper** ☐ **download**
**(Note: In choosing the download option you intend to view the ROP/ROC from our Website. No copy will be sent to you.)**

**Date** 12/18/02 **Name** John B. Smith **Telephone** 617-555-1212
**Company** _____
**Address** 9 Seattle St. **City** Seattle **State** WA **Zip** 02255
**Please indicate organization represented (if any)** Fire Marshals Assn. of North America

1. **a) NFPA Document Title** National Fire Alarm Code
   **b) NFPA No. & Edition** NFPA 72, 2002 ed. **c) Section/Paragraph** 4.4.7.1.1

2. **Proposal Recommends:** *(check one)* ☐ **new text** ☐ **revised text** ☒ **deleted text**

3. **Proposal.** *(Include proposed new or revised wording, or identification of wording to be deleted.)* Note: Proposed text should be in legislative format, that is, use underscore to denote wording to be inserted (inserted wording) and strike-through to denote wording to be deleted (~~deleted wording~~). Delete exception.

4. **Statement of Problem and Substantiation for Proposal.** Note: State the problem that will be resolved by your recommendation. Give the specific reason for your proposal including copies of tests, research papers, fire experience, etc. If more than 200 words, it may be abstracted for publication. A properly installed and maintained system should be free of ground faults. The occurrence of one or more ground faults should be required to cause a "trouble" signal because it indicates a condition that could contribute to future malfunction of the system. Ground fault protection has been widely available on these systems for years and its cost is negligible. Requiring it on all systems will promote better installations, maintenance and reliability.

5. ☒ **This Proposal is Original Material.** Note: Original material is considered to be the submitter's own idea based on or as a result of his/her own experience, thought, or research and, to the best of his/her knowledge, is not copied from another source.

   ☐ **This Proposal is Not Original Material; Its Source** ***(if known)*** **is as Follows:** _____

Sample

*I hereby grant the NFPA all and full rights in copyright to this proposal, and I understand that I acquire no rights in any publication of NFPA in which this proposal in this or another similar or analogous form is used.*

**Signature** ***(Required)*** John B. Smith

**PLEASE USE SEPARATE FORM FOR EACH PROPOSAL • NFPA FAX (617) 770-3500**

**Mail to: Secretary, Standards Council • NFPA • 1 Batterymarch Park • PO Box 9101 • Quincy, MA 02269-9101**

Copyright National Fire Protection Association
Provided by IHS under license with NFPA
No reproduction or networking permitted without license from IHS
Not for Resale

# NFPA Technical Committee Document Proposal Form

**Note: All proposals must be received by 5:00 p.m. EST/EDST on the published proposal closing date.**

**For further information on the standards-making process, please contact Codes and Standards Administration at 617-984-7249. For technical assistance, please call NFPA at 617-770-3000.**

FOR OFFICE USE ONLY
Log #: _____
Date Rec'd: _____

**Please indicate in which format you wish to receive your ROP/ROC:** ☐ **CD ROM** ☐ **paper** ☐ **download**
**(Note: In choosing the download option you intend to view the ROP/ROC from our Website. No copy will be sent to you.)**

**Date** _____ **Name** _____ **Telephone** _____
**Company** _____
**Address** _____ **City** _____ **State** _____ **Zip** _____
**Please indicate organization represented (if any)** _____

1. **a) NFPA Document Title** _____
   **b) NFPA No. & Edition** _____ **c) Section/Paragraph** _____

2. **Proposal Recommends:** *(check one)* ☐ **new text** ☐ **revised text** ☐ **deleted text**

3. **Proposal.** *(Include proposed new or revised wording, or identification of wording to be deleted.)* Note: Proposed text should be in legislative format, that is, use underscore to denote wording to be inserted (inserted wording) and strike-through to denote wording to be deleted (~~deleted wording~~). _____

4. **Statement of Problem and Substantiation for Proposal.** Note: State the problem that will be resolved by your recommendation. Give the specific reason for your proposal including copies of tests, research papers, fire experience, etc. If more than 200 words, it may be abstracted for publication. _____

5. ☐ **This Proposal is Original Material.** Note: Original material is considered to be the submitter's own idea based on or as a result of his/her own experience, thought, or research and, to the best of his/her knowledge, is not copied from another source.

   ☐ **This Proposal is Not Original Material; Its Source *(if known)* is as Follows:** _____

*I hereby grant the NFPA all and full rights in copyright to this proposal, and I understand that I acquire no rights in any publication of NFPA in which this proposal in this or another similar or analogous form is used.*

**Signature *(Required)*** _____

**PLEASE USE SEPARATE FORM FOR EACH PROPOSAL • NFPA FAX (617) 770-3500**

**Mail to: Secretary, Standards Council • NFPA • 1 Batterymarch Park • PO Box 9101 • Quincy, MA 02269-9101**

Copyright National Fire Protection Association
Provided by IHS under license with NFPA
No reproduction or networking permitted without license from IHS
Not for Resale