Errata

NFPA 255

Standard Method of Test of Surface Burning Characteristics of Building Materials

2006 Edition

Reference: D.2.11
Errata No.: 255-06-1

The Technical Committee on Fire Test notes the following errors in the 2006 edition of NFPA 255, *Standard Method of Test of Surface Burning Characteristics of Building Materials.*

1. Revise annex D.2.11 as follows:

D.2.11 Annex B, adopted in 1968, was intended as a guide for the mounting of specimens and is not a mandatory part of the method, since the intent of the method is that the specimen be tested as closely as possible to the manner in which it is to be applied in general use. In 1978, revisions were made to the annex that dealt with the testing of adhesives, the description of a wood substrate for testing coatings, and the definition of the properties of the reinforced cement board used as a standard backing and the metal rods used as supports. ~~For the 2006 edition, Annex B was moved to the body of NFPA 255 as Chapter 6 and was written in mandatory language.~~

Issue Date: November 29, 2006

Copyright © 2006 all Rights Reserved
NATIONAL FIRE PROTECTION ASSOCIATION

--`,,```,,,,````-`-`,,`,,`,`,,`---

Copyright National Fire Protection Association
Provided by IHS under license with NFPA
No reproduction or networking permitted without license from IHS

Not for Resale

NFPA 255

Standard Method of Test of Surface Burning Characteristics of Building Materials

2006 Edition



NFPA, 1 Batterymarch Park, Quincy, MA 02169-7471
An International Codes and Standards Organization

--`,,```,,,,````-`-`,,`,,`,`,,`---

Copyright National Fire Protection Association
Provided by IHS under license with NFPA
No reproduction or networking permitted without license from IHS

Not for Resale

IMPORTANT NOTICES AND DISCLAIMERS CONCERNING NFPA DOCUMENTS

NOTICE AND DISCLAIMER OF LIABILITY CONCERNING THE USE OF NFPA DOCUMENTS

NFPA codes, standards, recommended practices, and guides, of which the document contained herein is one, are developed through a consensus standards development process approved by the American National Standards Institute. This process brings together volunteers representing varied viewpoints and interests to achieve consensus on fire and other safety issues. While the NFPA administers the process and establishes rules to promote fairness in the development of consensus, it does not independently test, evaluate, or verify the accuracy of any information or the soundness of any judgments contained in its codes and standards.

The NFPA disclaims liability for any personal injury, property or other damages of any nature whatsoever, whether special, indirect, consequential or compensatory, directly or indirectly resulting from the publication, use of, or reliance on this document. The NFPA also makes no guaranty or warranty as to the accuracy or completeness of any information published herein.

In issuing and making this document available, the NFPA is not undertaking to render professional or other services for or on behalf of any person or entity. Nor is the NFPA undertaking to perform any duty owed by any person or entity to someone else. Anyone using this document should rely on his or her own independent judgment or, as appropriate, seek the advice of a competent professional in determining the exercise of reasonable care in any given circumstances.

The NFPA has no power, nor does it undertake, to police or enforce compliance with the contents of this document. Nor does the NFPA list, certify, test or inspect products, designs, or installations for compliance with this document. Any certification or other statement of compliance with the requirements of this document shall not be attributable to the NFPA and is solely the responsibility of the certifier or maker of the statement.

Copyright National Fire Protection Association
Provided by IHS under license with NFPA
No reproduction or networking permitted without license from IHS
Not for Resale

ADDITIONAL NOTICES AND DISCLAIMERS

Updating of NFPA Documents

Users of NFPA codes, standards, recommended practices, and guides should be aware that these documents may be superseded at any time by the issuance of new editions or may be amended from time to time through the issuance of Tentative Interim Amendments. An official NFPA document at any point in time consists of the current edition of the document together with any Tentative Interim Amendments and any Errata then in effect. In order to determine whether a given document is the current edition and whether it has been amended through the issuance of Tentative Interim Amendments or corrected through the issuance of Errata, consult appropriate NFPA publications such as the National Fire Codes® Subscription Service, visit the NFPA website at www.nfpa.org, or contact the NFPA at the address listed below.

Interpretations of NFPA Documents

A statement, written or oral, that is not processed in accordance with Section 6 of the Regulations Governing Committee Projects shall not be considered the official position of NFPA or any of its Committees and shall not be considered to be, nor be relied upon as, a Formal Interpretation.

Patents

The NFPA does not take any position with respect to the validity of any patent rights asserted in connection with any items which are mentioned in or are the subject of NFPA codes, standards, recommended practices, and guides, and the NFPA disclaims liability for the infringement of any patent resulting from the use of or reliance on these documents. Users of these documents are expressly advised that determination of the validity of any such patent rights, and the risk of infringement of such rights, is entirely their own responsibility.

NFPA adheres to applicable policies of the American National Standards Institute with respect to patents. For further information contact the NFPA at the address listed below.

Law and Regulations

Users of these documents should consult applicable federal, state, and local laws and regulations. NFPA does not, by the publication of its codes, standards, recommended practices, and guides, intend to urge action that is not in compliance with applicable laws, and these documents may not be construed as doing so.

Copyrights

This document is copyrighted by the NFPA. It is made available for a wide variety of both public and private uses. These include both use, by reference, in laws and regulations, and use in private self-regulation, standardization, and the promotion of safe practices and methods. By making this document available for use and adoption by public authorities and private users, the NFPA does not waive any rights in copyright to this document.

Use of NFPA documents for regulatory purposes should be accomplished through adoption by reference. The term "adoption by reference" means the citing of title, edition, and publishing information only. Any deletions, additions, and changes desired by the adopting authority should be noted separately in the adopting instrument. In order to assist NFPA in following the uses made of its documents, adopting authorities are requested to notify the NFPA (Attention: Secretary, Standards Council) in writing of such use. For technical assistance and questions concerning adoption of NFPA documents, contact NFPA at the address below.

For Further Information

All questions or other communications relating to NFPA codes, standards, recommended practices, and guides and all requests for information on NFPA procedures governing its codes and standards development process, including information on the procedures for requesting Formal Interpretations, for proposing Tentative Interim Amendments, and for proposing revisions to NFPA documents during regular revision cycles, should be sent to NFPA headquarters, addressed to the attention of the Secretary, Standards Council, NFPA, 1 Batterymarch Park, P.O. Box 9101, Quincy, MA 02269-9101.

For more information about NFPA, visit the NFPA website at www.nfpa.org.

Copyright National Fire Protection Association
Provided by IHS under license with NFPA
No reproduction or networking permitted without license from IHS
Not for Resale

Copyright © 2005, National Fire Protection Association, All Rights Reserved

NFPA 255

Standard Method of

Test of Surface Burning Characteristics of Building Materials

2006 Edition

This edition of NFPA 255, *Standard Method of Test of Surface Burning Characteristics of Building Materials*, was prepared by the Technical Committee on Fire Tests and acted on by NFPA at its June Association Technical Meeting held June 6–10, 2005, in Las Vegas, NV. It was issued by the Standards Council on July 29, 2005, with an effective date of August 18, 2005, and supersedes all previous editions.

This edition of NFPA 255 was approved as an American National Standard on August 18, 2005.

Origin and Development of NFPA 255

The test procedure covered by this standard was originally developed by Underwriters Laboratories Inc., and a descriptive article on the procedure was published in the *NFPA Quarterly* in July 1943. Subsequently, the test method was considered by Committee E-5 of the American Society for Testing and Materials and adopted by the ASTM as a tentative standard in 1950. Subsequent to NFPA action on this standard, on recommendation of the Committee on Building Construction in 1953, a new NFPA Committee on Fire Tests was created to provide the machinery for NFPA action on fire test standards in cooperation with the American Society for Testing and Materials. At the 1955 NFPA Annual Meeting, the Committee on Fire Tests, by a divided vote, recommended continuing tentative status, but, in view of the recommendation of the NFPA Committee on Building Construction and also of the NFPA Committee on Safety to Life, which use this standard in connection with interior finish requirements (*see NFPA 101®, Life Safety Code®*), the standard was officially adopted in 1955. Revised editions were released in 1958, 1961, 1966, 1969, 1972, 1979, 1984, 1990, and 1996.

The 1996 edition of NFPA 255 contained minor revisions that included the method of calculating the test results and some editorial revisions. Plans to study the effect of the retaining element used to support test specimens within the test chamber were in progress; future editions would reflect these findings.

The 2000 edition contained only minor changes including those on substrate in B-9 that recognized the type of substrate used with a wall covering. There has been activity in NFPA *101®, Life Safety Code®*, related to the study on using the retaining element. Also, a new standard, NFPA 286, *Standard Methods of Fire Tests for Evaluating Contribution of Wall and Ceiling Interior Finish to Room Fire Growth*, was developed that could be used for those materials that are not able to be tested to NFPA 255.

The 2006 edition includes a complete editorial rewrite for compliance with the *Manual of Style for NFPA Technical Committee Documents*. Further organizational and editorial changes were made to improve the application of the test method. The document's purpose was revised to better reflect the document's intent. Technical changes addressed test equipment, conditioning of red oak used in the test, and information to be included in the test report. Changes were also made to advisory information concerning mounting methods.

--`,,```,,,,````-`-`,,`,,`,`,,`---

Copyright National Fire Protection Association
Provided by IHS under license with NFPA
No reproduction or networking permitted without license from IHS

Not for Resale

Technical Committee on Fire Tests

William E. Fitch, *Chair*
Omega Point Laboratories Inc., TX [RT]

Jesse J. Beitel, Hughes Associates, Inc., MD [SE]
April L. Berkol, Starwood Hotels & Resorts Worldwide, Inc., NY [U]
Rep. American Hotel & Lodging Association
Robert G. Bill, Jr., FM Global, MA [I]
John A. Blair, The DuPont Company, DE [M]
Rep. Society of the Plastics Industry, Inc.
Gordon H. Damant, Inter-City Testing & Consulting Corporation of California, CA [SE]
Thomas W. Fritz, Armstrong World Industries, Inc., PA [M]
Pravinray D. Gandhi, Underwriters Laboratories Inc., IL [RT]
James R. Griffith, Southwest Research Institute, TX [RT]
Gordon E. Hartzell, Hartzell Consulting, Inc., TX [SE]
Marcelo M. Hirschler, GBH International, CA [SE]
Alfred J. Hogan, Reedy Creek Improvement District, FL [E]
Rep. International Fire Marshals Association
William E. Koffel, Koffel Associates, Inc., MD [SE]
James R. Lawson, National Institute of Standards and Technology, MD [RT]
Rodney A. McPhee, Canadian Wood Council, Canada [M]
Frederick W. Mowrer, University of Maryland, MD [SE]
David T. Sheppard, U.S. Department of Justice, MD [RT]
Kuma Sumathipala, American Forest & Paper Association, DC [M]
T. Hugh Talley, Hugh Talley Company, TN [M]
Rep. Upholstered Furniture Action Council
Rick Thornberry, The Code Consortium, Inc., CA [SE]
William A. Webb, Schirmer Engineering Corporation, IL [I]
Robert A. Wessel, Gypsum Association, DC [M]
Robert J. Wills, American Iron and Steel Institute, AL [M]
Peter J. Willse, GE Global Asset Protection Services, CT [I]

Alternates

Robert M. Berhinig, Underwriters Laboratories Inc., IL [RT]
(Alt. to P. D. Gandhi)
Delbert F. Boring, Jr., American Iron and Steel Institute, OH [M]
(Alt. to R. J. Wills)
Richard J. Davis, FM Global, MA [I]
(Alt. to R. G. Bill)
Sam W. Francis, American Forest & Paper Association, 4PA [M]
(Alt. to K. Sumathipala)
Richard G. Gann, National Institute of Standards and Technology, MD [RT]
(Alt. to J. R. Lawson)
Paul A. Hough, Armstrong World Industries, Inc., PA [M]
(Alt. to T. W. Fritz)
Marc L. Janssens, Southwest Research Institute, TX [RT]
(Alt. to J. R. Griffith)
James K. Lathrop, Koffel Associates, Inc., CT [SE]
(Alt. to W. E. Koffel)
James A. Milke, University of Maryland, MD [SE]
(Alt. to F. W. Mowrer)
Arthur J. Parker, Hughes Associates, Inc., MD [SE]
(Alt. to J. J. Beitel)
Ronald A. Schulz, GE Global Asset Protection Services, MI [I]
(Alt. to P. J. Willse)
Ineke Van Zeeland, Canadian Wood Council, Canada [M]
(Alt. to R. A. McPhee)
Joe Ziolkowski, American Furniture Manufacturers Association, NC [M]
(Alt. to T. H. Talley)

Nonvoting

Robert H. Barker, American Fiber Manufacturers Association, VA [M]
(Alt. to Nonvoting Principal, T. L. Jilg)
Tod L. Jilg, Hoechst Celanese Corporation, NC [M]
Rep. American Fiber Manufacturers Association
Rohit Khanna, U.S. Consumer Product Safety Commission, MD [C]

Milosh T. Puchovsky, NFPA Staff Liaison

This list represents the membership at the time the Committee was balloted on the final text of this edition. Since that time, changes in the membership may have occurred. A key to classifications is found at the back of the document.

NOTE: Membership on a committee shall not in and of itself constitute an endorsement of the Association or any document developed by the committee on which the member serves.

Committee Scope: This Committee shall have primary responsibility for documents on fire testing procedures, for reviewing existing fire test standards and recommending appropriate action to NFPA, for recommending the application of and advising on the interpretation of acceptable test standards for fire problems of concern to NFPA technical committees and members, and for acting in a liaison capacity between NFPA and the committees of other organizations writing fire test standards. This Committee does not cover fire tests that are used to evaluate extinguishing agents, devices, or systems.

Copyright National Fire Protection Association
Provided by IHS under license with NFPA
No reproduction or networking permitted without license from IHS
Not for Resale

Contents

Chapter 1 Administration **255–** 4
1.1 Scope **255–** 4
1.2 Purpose **255–** 4
1.3 Application **255–** 4
1.4 Units **255–** 4

Chapter 2 Referenced Publications **255–** 4
2.1 General **255–** 4
2.2 NFPA Publications. (Reserved) **255–** 4
2.3 Other Publications **255–** 4
2.4 References for Extracts in Mandatory Sections. (Reserved) **255–** 4

Chapter 3 Definitions **255–** 4
3.1 General **255–** 4
3.2 NFPA Official Definitions **255–** 4
3.3 General Definitions **255–** 4

Chapter 4 Test Equipment and Specimens **255–** 4
4.1 Fire Test Chamber **255–** 4
4.2 Test Specimens **255–** 7
4.3 Calibration of Test Equipment **255–** 7

Chapter 5 Conduct of Tests **255–** 9
5.1 Test Procedure **255–** 9
5.2 Analysis of Products of Combustion **255–**10
5.3 Flame Spread Index and Smoke Developed Index **255–**10
5.4 Report **255–**10

Annex A Explanatory Material **255–**10

Annex B Guide to Mounting Methods **255–**11

Annex C Derivation of Flame Spread Area Formulas in Section 5.3 ..... **255–**13

Annex D Commentary **255–**14

Annex E Informational References **255–**17

Index **255–**19

Copyright National Fire Protection Association
Provided by IHS under license with NFPA
No reproduction or networking permitted without license from IHS
Not for Resale

NFPA 255

Standard Method of

Test of Surface Burning Characteristics of Building Materials

2006 Edition

IMPORTANT NOTE: This NFPA document is made available for use subject to important notices and legal disclaimers. These notices and disclaimers appear in all publications containing this document and may be found under the heading "Important Notices and Disclaimers Concerning NFPA Documents." They can also be obtained on request from NFPA or viewed at www.nfpa.org/disclaimers.

NOTICE: An asterisk (*) following the number or letter designating a paragraph indicates that explanatory material on the paragraph can be found in Annex A.

Information on referenced publications can be found in Chapter 2 and Annex E.

Chapter 1 Administration

1.1 Scope.

1.1.1 This standard describes a method of testing the comparative surface burning characteristics of building materials with regard to flame spread and smoke developed.

1.1.2 This test method is applicable to any type of building material that by its own structural quality or the manner in which it is applied is capable of supporting itself in position, or is supported in the test furnace, in the thickness recommended for use.

1.2 Purpose.

1.2.1 The purpose of the test is to determine the comparative surface burning characteristics of the material under test by evaluating the flame spread over its surface and the resulting visible smoke, when exposed to a test fire, thus establishing a basis on which surface burning characteristics of different materials can be compared without specific consideration of all end-use parameters that might affect the surface burning characteristics.

1.2.2* In this test method, flame spread and visible smoke information is recorded and used to assess a flame spread index and a smoke developed index.

1.2.3* This test method shall not be used to evaluate the fire resistance of materials or assemblies.

1.3 Application.

1.3.1 It is the intent of this method of test to register performance during the period of exposure, not to determine suitability for use after the test exposure.

1.3.2 This method does not establish ratings of standards of performance for specific uses, because these ratings depend on service requirements.

1.4 Units. The values stated in U.S. customary units are to be regarded as the standard.

Chapter 2 Referenced Publications

2.1 General. The documents or portions thereof listed in this chapter are referenced within this standard and shall be considered part of the requirements of this document.

2.2 NFPA Publications. (Reserved)

2.3 Other Publications.

2.3.1 ASTM Publications. American Society for Testing and Materials, 100 Barr Harbor Drive, West Conshohocken, PA 19428-2959.

ASTM C 1186, *Standard Specification for Flat Non-Asbestos Fiber-Cement Sheets*, 2002.

ASTM D 4442, *Standard Test Methods for Direct Moisture Content Measurement of Wood and Wood-Base Materials*, 2003.

ASTM D 4444, *Standard Test Methods for Use and Calibration of Hand-Held Moisture Meters*, 2003.

ASTM E 136, *Standard Test Method for Behavior of Materials in a Vertical Tube Furnace at 750°C*, 1999.

2.3.2 Other Publication. *Merriam-Webster's Collegiate Dictionary*, 11th edition, Merriam-Webster, Inc., Springfield, MA, 2003.

2.4 References for Extracts in Mandatory Sections. (Reserved)

Chapter 3 Definitions

3.1 General. The definitions contained in this chapter shall apply to the terms used in this standard. Where terms are not defined in this chapter or within another chapter, they shall be defined using their ordinarily accepted meanings within the context in which they are used. *Merriam-Webster's Collegiate Dictionary*, 11th edition, shall be the source for the ordinarily accepted meaning.

3.2 NFPA Official Definitions.

3.2.1 Shall. Indicates a mandatory requirement.

3.2.2 Should. Indicates a recommendation or that which is advised but not required.

3.2.3 Standard. A document, the main text of which contains only mandatory provisions using the word "shall" to indicate requirements and which is in a form generally suitable for mandatory reference by another standard or code or for adoption into law. Nonmandatory provisions shall be located in an appendix or annex, footnote, or fine-print note and are not to be considered a part of the requirements of a standard.

3.3 General Definitions.

3.3.1* Flame Spread Index. A comparative measure, expressed as a dimensionless number, derived from visual measurements of the spread of flame vs. time.

3.3.2* Smoke Developed Index. A comparative measure, expressed as a dimensionless number, derived from measurements of smoke obscuration vs. time.

Chapter 4 Test Equipment and Specimens

4.1 Fire Test Chamber.

4.1.1* The fire test chamber, as shown in Figure 4.1.1(a) and Figure 4.1.1(b), shall consist of the following:

(1) Horizontal duct having an inside width of 17¾ in. ± ¼ in. (451 mm ± 6.3 mm), measured at the ledge location alongside walls, and 17⅝ in. ± ⅜ in. (448 mm ± 9.5 mm) at all other points

Copyright National Fire Protection Association
Provided by IHS under license with NFPA
No reproduction or networking permitted without license from IHS
Not for Resale

(2) Depth of 12 in. ± ½ in. (305 mm ± 12.7 mm), measured from the bottom of the test chamber to the ledge of the inner walls on which the specimen is supported, including the ⅛ in. (3.1 mm) thickness of woven fiberglass gasketing tape

(3) Length of 25 ft (7.62 m)

4.1.1.1 The sides and base of the duct shall be lined with insulating masonry, consisting of A. P. Green G-26 refractory fire brick or equivalent, as illustrated by Figure 4.1.1(b).

4.1.1.2 One side of the duct shall be provided with double-pane observation windows with the inside pane flush-mounted as illustrated in Figure 4.1.1(b).

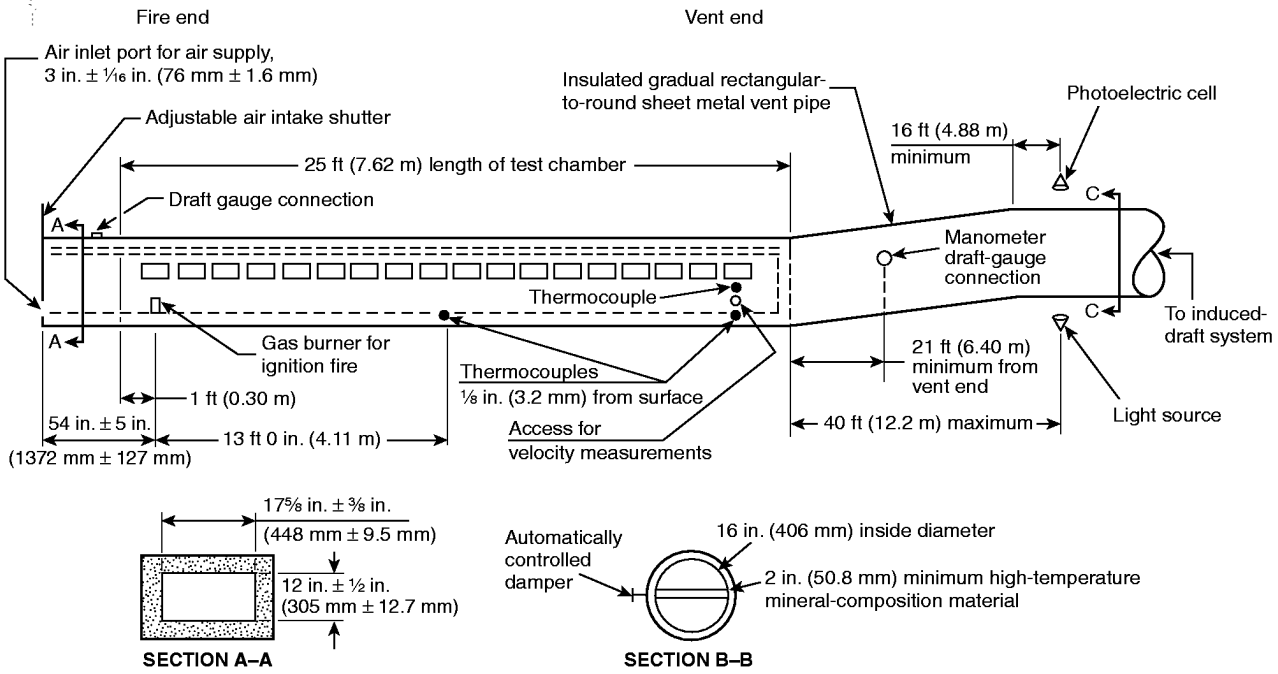

FIGURE 4.1.1(a) Fire Test Chamber.

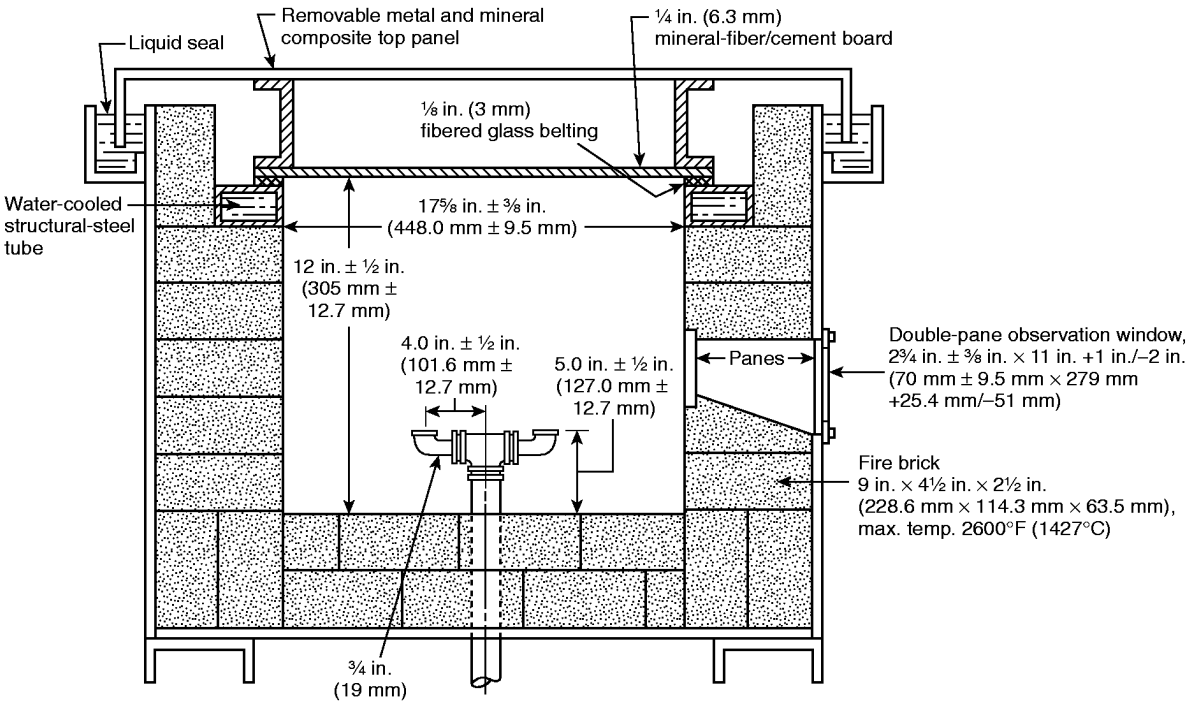

FIGURE 4.1.1(b) Side View of Fire Test Chamber.

Copyright National Fire Protection Association
Provided by IHS under license with NFPA
No reproduction or networking permitted without license from IHS
Not for Resale

4.1.1.3 Exposed inside glass shall be 2¾ in. ± ⅜ in. × 11 in. + 1 in./–2 in. (70 mm ± 9.5 mm × 279 mm +25.4 mm/–51 mm).

4.1.1.4 The centerline of the exposed area of the inside glass shall be in the upper half of the furnace wall, with the upper edge not less than 2½ in. (61.9 mm) below the furnace ledge.

4.1.1.5 The window shall be located so that a minimum of 12 in. (305 mm) of the specimen width can be observed.

4.1.1.6 Multiple windows shall be located along the tunnel so that the entire length of the test sample can be observed from outside the fire chamber.

4.1.1.7 The windows shall be pressuretight as described in 4.3.2.

4.1.2* The ledges of the tunnel shall meet the following criteria:

(1) They shall be fabricated of structural materials capable of withstanding the abuse of continuous testing.
(2) They shall be level with respect to the length and width of the chamber and each other.
(3) They shall be maintained in a state of repair at all times that is commensurate with the frequency, volume, and degree of testing.

4.1.3* Baffles shall be provided by positioning six A. P. Green G-26 refractory fire bricks or equivalent [long dimension vertical, 4½ in. (114 mm) dimension along the wall] along the side walls of the chamber as follows:

(1) Distances of 7 ft, 12 ft, and 20 ft ± 6 in. (2.1 m, 3.7 m, and 6.1 m ± 0.02 m) on the window side
(2) Distances of 4½ ft, 9½ ft, and 16 ft ± 6 in. (1.4 m, 2.9 m, and 4.9 m ± 0.02 m) on the opposite side

4.1.4* Tunnel Lid. The top lid shall consist of a removable noncombustible (metal and mineral composite) structure, insulated with nominal 2 in. (51 mm) thick mineral composition material as shown in Figure 4.1.1(b), and shall be of a size necessary to cover the fire test chamber and the test samples completely.

4.1.4.1 The lid shall be maintained in an unwarped and flat condition.

4.1.4.2 The mineral composition material shall have physical characteristics comparable to the following:

(1) Maximum effective temperature of 1200°F (649°C)
(2) Bulk density (ρ) of 21 lb/ft^3 (336 kg/m^3)
(3) Thermal conductivity (k) ranging from 0.50 Btu·in./hr·ft^2·°F to 0.71 Btu·in./hr·ft^2·°F (0.87 W/m·K to 1.23 W/m·K)
(4)*Thermal inertia ($k\rho C$) ranging from

$$1 \text{ to } 4\frac{(\text{Btu}^2\cdot\text{in.})}{\text{ft}^5\cdot\text{h}\cdot{}^\circ\text{F}^2}\left(1\times10^4 \text{ to } 4\times10^4\frac{\text{W}^2\cdot\text{s}}{\text{m}^4\cdot\text{K}^2}\right)$$

4.1.4.3 The entire lid assembly shall be protected with flat sections of high-density [nominal 90 ± 10 lb/ft^3 (1446 ± 165 kg/m^3)] ¼ in. (6.3 mm) reinforced cement board, complying with ASTM C 1186, *Standard Specification for Flat Non-Asbestos Fiber-Cement Sheets*, and passing ASTM E 136, *Standard Test Method for Behavior of Materials in a Vertical Tube Furnace at 750°C*, maintained in an unwarped and uncracked condition through continued replacement.

4.1.4.3.1 The protective board shall be permitted to be either secured or not secured to the furnace lid.

4.1.4.3.2 When in place, the top lid shall be sealed completely against the leakage of air into the fire test chamber during the test.

4.1.5 One end of the test chamber, designated as the fire end, shall be provided with two gas burners delivering flames upward against the surface of the test sample.

4.1.5.1 The burners shall be spaced 12 in. (305 mm) from the fire end of the test chamber and 7 in. ± ½ in. (178 mm ± 12.7 mm) below the undersurface of the test sample.

4.1.5.2 The air intake shutter shall be located 54 in. ± 5 in. (1372 mm ± 127 mm) upstream of the burner, as measured from the burner centerline to the outside surface of the shutter.

4.1.5.3 Gas to the burners shall be provided through a single inlet pipe, distributed to each port burner through a tee section.

4.1.5.4 The outlet shall be a ¾ in. (19 mm) elbow.

4.1.5.5 The plane of the port shall be parallel to the furnace floor so that the gas is directed up toward the specimen.

4.1.5.6 Each port shall be positioned with its centerline 4 in. ± ½ in. (102 mm ± 12.7 mm) from each side of the centerline of the furnace so that the flame is evenly distributed over the width of the exposed specimen surface *[see Figure 4.1.1(b)]*.

4.1.5.7 The controls used to ensure a constant flow of gas to the burners during the period of use shall consist of the following:

(1) Pressure regulator
(2) Gas meter calibrated to read in increments of not more than 0.1 ft^3 (2.8 L)
(3) Manometer to indicate gas pressure in inches of water
(4) Quick-acting gas shutoff valve
(5) Gas metering valve
(6) Orifice plate in combination with a water manometer to assist in maintaining uniform gasflow conditions

4.1.5.8 An air intake fitted with a vertically sliding shutter extending the entire width of the test chamber shall be provided at the fire end.

4.1.5.9 The sliding shutter shall be positioned to provide an air inlet port 3 in. ± 1/16 in. (76 mm ± 1.6 mm) high, measured from the floor level of the test chamber, at the air intake point.

4.1.6 The other end of the test chamber, designated as the vent end, shall be fitted with a gradual rectangular-to-round transition piece of not less than 20 in. (508 mm) in length and having a cross-sectional area of 200 in.^{2} (129,000 mm^2) at any point.

4.1.6.1 The transition piece shall, in turn, be fitted to a flue pipe 16 in. (406 mm) in diameter.

4.1.6.2 The movement of air shall be achieved by an induced draft system having a total draft capacity of at least 0.15 in. (3.8 mm) water column under the following conditions:

(1) The sample shall be in place.
(2) The shutter at the fire end shall be open to the normal 3 in. ± 1/16 in. (76 mm ± 1.6 mm).
(3) The damper shall be in the fully open position.

4.1.6.3 A draft gauge to indicate static pressure shall be inserted through the top at the midwidth of the tunnel, 1 in. ± ½ in. (25.4 mm ± 12.7 mm) below the ceiling, and 15 in. ± ½ in. (381 mm ± 12.7 mm) downstream from the inlet shutter.

Copyright National Fire Protection Association
Provided by IHS under license with NFPA
No reproduction or networking permitted without license from IHS
Not for Resale

4.1.7* A photometric system consisting of a light source and photocell shall be mounted on a horizontal section of the 16 in. (406 mm) diameter vent pipe *(see 4.1.6.1)* at a point where it is preceded by a straight run of pipe [at least 12 diameters or 16 ft (4.88 m) and not more than 30 diameters or 40 ft (12.2 m)] from the vent end of the chamber, and with the light beam directed upward along the vertical axis of the vent pipe.

4.1.7.1 The vent pipe shall be insulated with at least 2 in. (51 mm) of high-temperature mineral composition material from the vent end of the chamber to the photometer location.

4.1.7.2 A photoelectric cell with an output that is directly proportional to the amount of light received shall be mounted over the light source and connected to a recording device having a minimum operating chart width of 5 in. (127 mm), with an accuracy within ±1 percent of full scale for the purpose of indicating changes in the attenuation of incident light caused by the passing smoke, particulate, and other effluent.

4.1.7.3 The distance between the light source lens and the photocell lens shall be 36 in. ± 4 in. (914 mm ± 102 mm).

4.1.7.4 The cylindrical light beam shall pass through 3 in. (76 mm) diameter openings at the top and bottom of the 16 in. (406 mm) diameter openings at the top and bottom of the 16 in. (406 mm) diameter duct, with the resultant light beam centered on the photocell.

4.1.8 The linearity of the photometer system shall be verified periodically by interrupting the light beam with calibrated neutral density filters.

4.1.8.1 The density filters shall cover the full range of the recording instrument.

4.1.8.2 Transmittance values measured by the photometer, using neutral density filters, shall be within ±3 percent of the calibrated value for each filter.

4.1.9 An automatically controlled damper provided with a manual override shall be installed in the vent pipe downstream of the smoke-indicating attachment to regulate the draft pressure.

4.1.10 Other manual, automatic, or combination manual and automatic draft regulation devices shall be permitted to be incorporated to maintain fan characterization and airflow control throughout test periods.

4.1.11 An 18 AWG (1.02 mm) thermocouple with ⅜ in. ± ⅛ in. (9.5 mm ± 3.1 mm) of the junction exposed in the air shall be inserted through the floor of the test chamber so that the tip is 1 in. ± 1/32 in. (25.4 mm ± 0.8 mm) below the top surface of the woven fiberglass gasketing tape and 23 ft ± ½ in. (7.0 m ± 12.7 mm) from the centerline of the burner ports at the center of the burner width.

4.1.12 An 18 AWG (1.02 mm) thermocouple embedded ⅛ in. (3.1 mm) below the floor surface of the test chamber shall be mounted in refractory or portland cement, carefully dried to avoid cracking, at distances of 13 ft ± ½ in. (3.96 m ± 12.7 mm) and 23¼ ft ± ½ in. (7.09 m ± 12.7 mm) from the centerline of the burner ports.

4.1.13 The room in which the test chamber is located shall have provision for a free inflow of air during the test to maintain the room at atmospheric pressure during the entire test run.

4.2 Test Specimens.

4.2.1 The test specimen shall be at least 2 in. (51 mm) wider [nominally 20¼ in. ± ¾ in. (514 mm ± 19 mm)] than the interior width of the tunnel and a total of 24 ft ± ½ in. (7.32 m ± 12.7 mm) in length.

4.2.1.1 The specimen shall be permitted to be one continuous, unbroken length or to consist of sections joined end to end.

4.2.1.2 A 14 in. ± ⅛ in. (356 mm ± 3.1 mm) length of uncoated 16 gauge (0.053 in. to 0.060 in.) steel sheet shall be placed on the specimen mounting ledge in front of and under the specimen in the upstream end of the tunnel.

4.2.1.3 The specimen shall be representative of the material for which test results are desired.

4.2.2 The test specimen shall be conditioned to a constant weight at a temperature of 73.4°F ± 5°F (23°C ± 2.8°C) and at a relative humidity of 50 percent ± 5 percent.

4.3 Calibration of Test Equipment.

4.3.1 A ¼ in. (6.3 mm) reinforced cement board shall be placed on the ledge of the furnace chamber, and the removable lid of the test chamber then shall be placed in position.

4.3.2 With the ¼ in. (6.3 mm) reinforced cement board in position on top of the ledge of the furnace chamber and the removable lid in place, a draft shall be established to produce a 0.15 in. (3.8 mm) water column reading on the draft manometer, with the fire end shutter open 3 in. ± 1/16 in. (76 mm ± 1.6 mm), by manually setting the damper in relationship to the fan performance.

4.3.2.1 Once a draft has been established as indicated in 4.3.2, the fire end shutter shall be closed and sealed without changing the damper position.

4.3.2.2* The manometer water column reading shall be verified to have increased to at least 0.375 in. (9.53 mm) prior to continuing with the test.

4.3.3 In addition to the test specified in 4.3.2, a supplemental leakage test shall be conducted periodically by sealing the fire shutter and exhaust duct beyond the differential manometer tube and placing a smoke bomb in the chamber.

4.3.3.1 The smoke bomb shall be ignited and the chamber pressurized to 0.375 in. ± 0.135 in. (9.53 mm ± 3.43 mm) water column.

4.3.3.2 All points of leakage observed in the form of escaping smoke particles shall be sealed.

4.3.3.3 A draft reading within the range of 0.055 in. to 0.085 in. (1.40 mm to 2.16 mm) water column shall be established.

4.3.3.4 The draft gauge reading required in 4.3.3.3 shall be maintained throughout the test by the automatically controlled damper.

4.3.4* Supplemental Leakage Test. The air velocity shall be recorded at seven points located 23 ft (7.0 m) from the centerline of the burner ports and 6 in. ± ¼ in. (152 mm ± 6.3 mm) below the plane of the specimen mounting ledge.

4.3.4.1 The seven points specified in 4.3.4 shall be determined by dividing the width of the tunnel into seven equal sections and recording the velocity at the geometric center of each section.

4.3.4.2 During the measurement of velocity, the bricks as specified in 4.1.3 and the exposed thermocouple located at 23 ft (7.0 m) shall be removed and 24 in. (610 mm) long straightening vanes shall be placed 16 ft to 18 ft (4.88 m to 5.49 m) from the burner.

Copyright National Fire Protection Association
Provided by IHS under license with NFPA
No reproduction or networking permitted without license from IHS
Not for Resale

4.3.4.3 The straightening vanes shall divide the furnace cross-section into nine uniform sections.

4.3.4.4 The velocity shall be determined with the furnace air temperature at 73.4°F ± 5°F (23°C ± 2.8°C) using a velocity transducer.

4.3.4.5 It shall be verified that the velocity, determined as the arithmetic average of the seven readings, is 240 ft/min ± 5 ft/min (73.2 m/min ± 1.5 m/min) prior to continuing with the test.

4.3.5 The air supply shall be maintained at 73.4°F ± 5°F (23°C ± 2.8°C) and the relative humidity at 50 percent ± 5 percent.

4.3.6 The fire test chamber shall be supplied with natural (municipal) or methane (bottled) gas fuel of uniform quality with a heating value of nominally 1000 Btu/ft^3 (37.3 MJ/m^3).

4.3.6.1 The gas supply shall be adjusted initially at approximately 5000 Btu/min (5.3 MJ/min).

4.3.6.2 The gas pressure, the pressure differential across the orifice plate, and the volume of gas used in each test shall be recorded.

4.3.6.3 Unless otherwise corrected for, where bottled methane is used, a length of coiled copper tubing shall be inserted into the gas line between the supply and metering connection to compensate for possible errors in the indicated flow due to reductions in gas temperature associated with the pressure drop and expansion across the regulator.

4.3.6.4 With the draft and gas supply adjusted as indicated in 4.3.3 and 4.3.6.1, the test flame shall extend downstream to a distance of 4½ ft (1.37 m) over the specimen surface with negligible upstream coverage.

4.3.7 Preheating. The test chamber shall be preheated with the ¼ in. (6.3 mm) reinforced cement board *(see 4.3.1)* and the removable lid in place and with the fuel supply adjusted to the required flow.

4.3.7.1 The preheating shall be continued until the temperature indicated by the floor thermocouple at 23¼ ft (7.09 m) reaches 150°F ± 5°F (66°C ± 2.8°C).

4.3.7.2* During the preheat test, the temperatures indicated by the thermocouple at the vent end of the test chamber shall be recorded at intervals not longer than 15 seconds, and these readings shall be compared to the preheat temperature shown in the temperature–time curve in Figure 4.3.7.2.

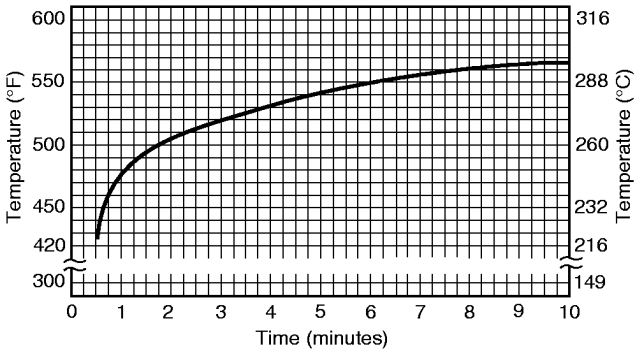

FIGURE 4.3.7.2 Temperature–Time Chart for Preheat Temperature.

4.3.7.3 If appreciable variation from the temperature shown in the representative preheat curve is observed, it shall be necessary to conduct new red oak calibration tests and adjust the fuel supply.

4.3.8 The next specimen shall not be placed into position for testing until the floor thermocouple at 13 ft (3.96 m) indicates a temperature of 105°F ± 5°F (40.5°C ± 2.8°C).

4.3.9 With the test equipment adjusted and conditioned as described in 4.3.2 through 4.3.8, a test or series of tests shall be made using nominal 25/32 in. (19.8 mm) select grade red oak flooring as a specimen that has been conditioned to 6 percent to 8 percent moisture content as determined by the procedure described in 4.3.10.

4.3.9.1 Observations shall be made at maximum distance intervals of 2 ft (0.61 m) and maximum time intervals of 30 seconds, and the time at which the flame reaches the end of the specimen that is 19½ ft (5.94 m) from the end of the ignition fire shall be recorded.

4.3.9.2 The end of the ignition fire shall be considered to be 4½ ft (1.37 m) from the burners.

4.3.9.3 The flame shall reach the end point in 5½ minutes ± 15 seconds.

4.3.9.4 The temperatures measured by the thermocouple near the vent end shall be recorded at least every 15 seconds.

4.3.9.5 The photoelectric cell output shall be recorded immediately prior to the test and at least every 15 seconds during the test.

4.3.9.6 The flame shall be permitted to be considered as having reached the end point when the vent end thermocouple registers a temperature of 980°F (527°C).

4.3.10 Conditioning of Red Oak.

4.3.10.1 Using either a conductance or dielectric type meter calibrated per ASTM D 4444, *Standard Test Methods for Use and Calibration of Hand-Held Moisture Meters,* the moisture content of the select grade red oak flooring shall be monitored until the desired level is reached.

4.3.10.2 Only the trimmed sections shall be subjected to the secondary oven-drying method (Method B) in ASTM D 4442, *Standard Test Methods for Direct Moisture Content Measurement of Wood and Wood-Base Materials,* for the final determination of moisture content.

4.3.11 Calibration of Red Oak.

4.3.11.1 The flame spread distance, temperature, and change in photoelectric cell readings shall be plotted separately as shown in Figure 4.3.11.1(a), Figure 4.3.11.1(b), and Figure 4.3.11.1(c), which reflect representative curves for red oak temperature–time, absorption–time smoke density, and distance–time flame spread, respectively.

4.3.11.2 Flame spread shall be determined from the observed distance less 4½ ft (1.37 m).

4.3.11.3 The results shall represent a flame spread index and smoke developed index of 100 using the calculation method in Section 5.3.

4.3.12 Calibration of Cement Board. Following the calibration tests for red oak, a similar test or series of tests shall be conducted on samples of ¼ in. (6.3 mm) reinforced cement board, complying with ASTM C 1186, *Standard Specification for Flat Non-Asbestos Fiber-Cement Sheets,* and passing ASTM E 136, *Standard Test Method for Behavior of Materials in a Vertical Tube Furnace at 750°C.*

Copyright National Fire Protection Association
Provided by IHS under license with NFPA
No reproduction or networking permitted without license from IHS
Not for Resale

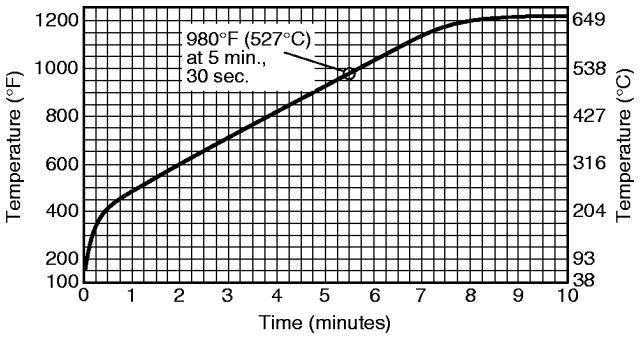

FIGURE 4.3.11.1(a) Temperature–Time Curve for Red Oak.

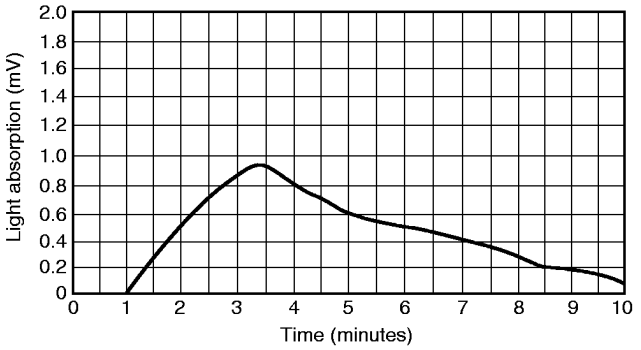

FIGURE 4.3.11.1(b) Absorption–Time Curve for Smoke Density of Red Oak.

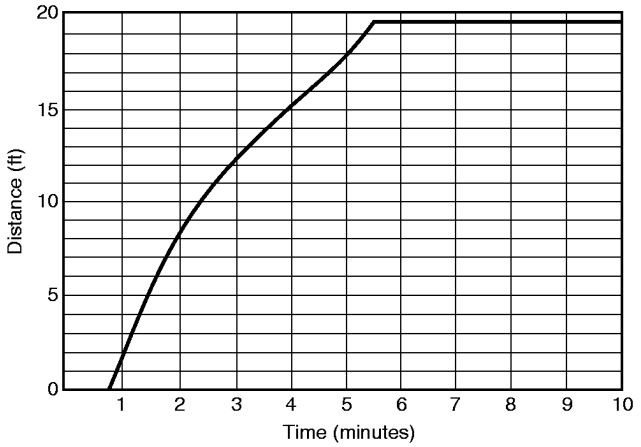

FIGURE 4.3.11.1(c) Distance–Time Curve for Flame Spread of Red Oak.

4.3.12.1 The results of the test(s) specified in 4.3.12 shall represent a flame spread index and a smoke developed index of zero (0) using the calculation method in Section 5.3.

4.3.12.2 The temperature readings shall be plotted separately, as shown in Figure 4.3.12.2, which reflects a representative curve for temperature–time development for reinforced cement board.

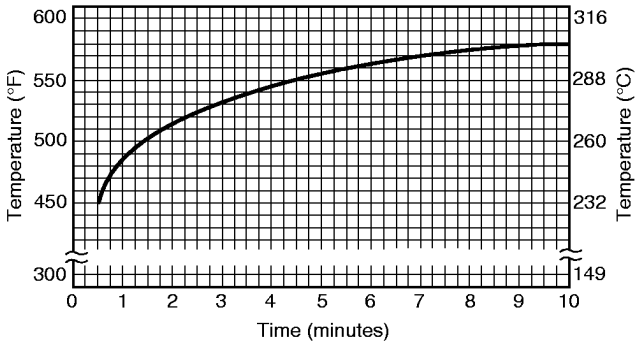

FIGURE 4.3.12.2 Temperature–Time Curve for Reinforced Cement Board.

Chapter 5 Conduct of Tests

5.1 Test Procedure.

5.1.1 With the furnace draft operating, the test specimen shall be placed on the test chamber ledges that have been completely covered with nominal ⅛ in. (3.1 mm) thick × 1½ in. (38.1 mm) wide woven fiberglass tape.

5.1.1.1 The specimen shall be positioned as quickly as is practicable.

5.1.1.2 The removable lid shall be placed in position over the specimen.

5.1.2 The completely mounted specimen shall remain in position in the chamber with the furnace draft operating for 120 seconds ± 15 seconds prior to the application of the test flame.

5.1.3 The burner gas shall be ignited.

5.1.3.1 The distance and time of maximum flame front travel shall be observed and recorded with the room darkened.

5.1.3.2 The test shall continue for 10 minutes unless all the following conditions occur, in which case the test shall be permitted to be terminated sooner:

(1) The specimen is completely consumed in the fire area.
(2) No further progressive burning is evident.
(3) The photoelectric cell reading has returned to the baseline.

5.1.4 The photoelectric cell output shall be recorded immediately prior to the test and at least every 15 seconds during the test.

5.1.5 The gas pressure, the pressure differential across the orifice plate, and the volume of gas used for each test shall be recorded.

5.1.6 When the test is completed, the gas supply shall be shut off, observations shall be made regarding smoldering or other conditions within the test duct, and the specimen shall be removed for further examination.

5.1.7 The flame spread distance, temperature, and change in photoelectric cell readings shall be plotted separately on the same type of coordinate paper used in 4.3.11 in order to determine the flame spread index and smoke developed index values as development classifications outlined in Section 5.3.

Copyright National Fire Protection Association
Provided by IHS under license with NFPA
No reproduction or networking permitted without license from IHS
Not for Resale

5.1.7.1 The flame spread observations specified in 5.1.7 shall be recorded at maximum distance intervals of 2 ft (0.61 m) or maximum time intervals of 30 seconds.

5.1.7.2 In addition to the requirements of 5.1.7.1, the peak and its time of occurrence shall be recorded.

5.1.7.3 Flame spread shall be determined from the observed distance less 4½ ft (1.37 m).

5.2 Analysis of Products of Combustion. Although not required as a part of this method, products of combustion shall be permitted to be drawn from the test duct for chemical analysis during the test.

5.3 Flame Spread Index and Smoke Developed Index.

5.3.1 Flame Spread Index. The flame spread index shall be determined as specified in 5.3.1.1 through 5.3.1.3.

5.3.1.1* The total area, A_T, under the flame spread distance–time curve shall be determined by ignoring any flame front recession.

5.3.1.2 If the total area, A_T, is less than or equal to 97.5 min-ft (29.7 min-m), the flame spread index (FSI) equals 0.515 times the total area ($FSI = 0.515\ A_T$).

5.3.1.3 If the total area, A_T, is greater than 97.5 min-ft (29.7 min-m), the flame spread index equals 4900 divided by the difference between 195 and the total area, A_T [$FSI = 4900/(195 - A_T)$].

5.3.2 Smoke Developed Index. The test results for smoke shall be plotted using the coordinates in Figure 4.3.11.1(a), Figure 4.3.11.1(b), and Figure 4.3.11.1(c).

5.3.2.1 The area under the curve shall be divided by the area under the curve for red oak and multiplied by 100 to establish a numerical smoke developed index by which the performance of the material can be compared with that of reinforced cement board, complying with ASTM C 1186, *Standard Specification for Flat Non-Asbestos Fiber-Cement Sheets,* and passing ASTM E 136, *Standard Test Method for Behavior of Materials in a Vertical Tube Furnace at 750°C,* and select grade red oak flooring, which have been arbitrarily established as 0 and 100, respectively.

5.3.2.2 Allowance shall be permitted to be made for accumulation of soot and dust on the photoelectric cell during the test by establishing a revised baseline.

5.3.2.3 The revised baseline shall be a straight line drawn from the zero (0) point (point on baseline where incipient light attenuation occurs) to the point established after the sample has been removed.

5.4 Report. The report shall include all of the following information:

(1) Description of the material being tested
(2) Information on the thickness of the test specimen and information provided by the test sponsor on the composition of the test specimen to identify its materials or ingredients or both
(3) Information on whether the material was tested as a continuous or sectioned specimen
(4) Test results as calculated in Section 5.3 and reported as follows:
   (a) Individual flame spread index value rounded to the nearest multiple of 5
   (b) Individual smoke developed index value rounded to the nearest multiple of 5; for smoke developed index values of 200 or more, the reported value shall be rounded to the nearest multiple of 50
(5) Details of specimen preparation and the mounting method used in the test chamber
(6) Observations of the burning characteristics of the specimen during test exposure such as, but not limited to, delamination, sagging, shrinkage, fallout, and the presence of flaming, droplets, particles, debris, or materials
(7) Time periods during which the measurement remains at 0 percent if the light transmission measurement reaches 0 percent

Annex A Explanatory Material

Annex A is not a part of the requirements of this NFPA document but is included for informational purposes only. This annex contains explanatory material, numbered to correspond with the applicable text paragraphs.

A.1.2.2 There is not necessarily a relationship between the values of visible smoke and flame spread rate.

A.1.2.3 See NFPA 251, *Standard Methods of Tests of Fire Resistance of Building Construction and Materials,* for procedures for determining fire resistance. NFPA 251 can assess the performance, under fire exposure conditions, of building construction and materials where incorporated in a test structure and subject to a standard exposing fire of controlled extent and severity.

A.3.3.1 Flame Spread Index. This index is determined by testing a material in accordance with NFPA 255; ASTM E 84, *Standard Test Method for Surface Burning Characteristics of Building Materials;* or UL 723, *Standard for Test for Surface Burning Characteristics of Building Materials.*

A.3.3.2 Smoke Developed Index. See A.3.3.1.

A.4.1.1 The following product references can be useful in obtaining materials for the construction of the fire test chamber and are provided for informational purposes only and have not been independently verified, certified, or endorsed by NFPA or any of its technical committees:

(1) Woven fiberglass tape, 1½ in. × ⅛ in. (38.1 mm × 3.1 mm), No. 8817K35 from McMaster-Carr, P.O. Box 54960, Los Angeles, CA 90054, or an equivalent, is suitable for this purpose.
(2) This method of lining the sides and base of the duct with insulating masonry is based on the use of G-26 fire brick manufactured by A.P. Green Refractories.
(3) Double-pane observation windows should be constructed of heat-resistant glass, such as the following:
   (a) Vycor, 100 percent silica glass, nominal ¼ in. (6.3 mm) thick, is suitable for the interior pane.
   (b) Pyrex® glass, nominal ¼ in. (6.3 mm) thick, is suitable for the exterior pane.

A.4.1.2 High-temperature furnace refractory Zircon has been found suitable for this purpose.

A.4.1.3 The purpose of the baffles is to ensure turbulent flow. The following is being provided for informational purposes only and has not been independently verified, certified, or endorsed by NFPA or any of its technical committees: This method for turbulence baffling is based on the use of G-26 fire brick, manufactured by A.P. Green Refractories.

Copyright National Fire Protection Association
Provided by IHS under license with NFPA
No reproduction or networking permitted without license from IHS
Not for Resale

A.4.1.4 The following is being provided for informational purposes only and has not been independently verified, certified, or endorsed by NFPA or any of its technical committees: For reinforced cement board, Manville Building Materials Corporation Flexboard II and Tunnel Building Products sterling board are suitable materials for this purpose.

A.4.1.4.2(4) $k\rho C$ = thermal conductivity × density × specific heat.

A.4.1.7 The following is being provided for informational purposes only and has not been independently verified, certified, or endorsed by NFPA or any of its technical committees: A Weston Instruments No. 856BB photronic cell and 12-volt sealed beam, clear lens, autolamp with an overall light-to-cell path length of 36 in. ± 4 in. (914 mm ± 102 mm) is suitable for this purpose.

A.4.3.2.2 The purpose of the manometer reading is to indicate that no excessive air leakage exists.

A.4.3.4 The following is being provided for informational purposes only and has not been independently verified, certified, or endorsed by NFPA or any of its technical committees: A Thermo Systems Inc. Model 1610 velocity transducer (thermal anemometer), using a readout device accurate to 0.001 V, is suitable for this purpose.

A.4.3.7.2 The preheating is for the purpose of establishing the conditions that exist following successive tests that indicate the control of the heat input into the test chamber.

A.5.3.1.1 For example, in Figure A.5.3.1.1, the flame spread shown is 10 ft (3.05 m) in 2½ minutes and then it recedes. The area is calculated as though the flame had spread to 10 ft (3.05 m) in 2½ minutes and then remained at 10 ft (3.05 m) for the remainder of the test or until the flame front again passed 10 ft (3.05 m) as indicated by the broken line in Figure A.5.3.1.1. The area, A_T, used for calculating the flame spread index values is the sum of areas A_1 and A_2 as shown.

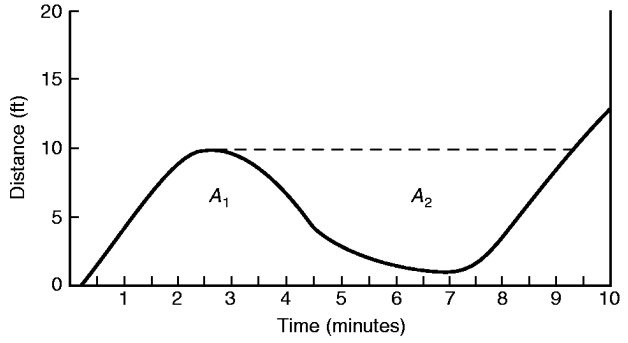

FIGURE A.5.3.1.1 Example of Distance–Time Curve with Flame Front Recession.

Annex B Guide to Mounting Methods

This annex is not a part of the requirements of this NFPA document but is included for informational purposes only.

B.1 Introduction.

B.1.1 This guide has been compiled as an aid in selecting a method for mounting various building materials in the fire test chamber. These mountings are recommended for test method uniformity and convenience; they are not meant to imply restriction in the specific details of field installation.

B.1.2 For some building materials, it is possible that none of the methods described are applicable. In such cases, other means of support might need to be devised.

B.1.3 These recommended mounting methods are grouped according to building materials to be tested that are identified broadly by either the usage or the form of the material.

B.1.4 Wherever inorganic-reinforced cement board is specified as a backing in subsequent paragraphs, the material should be nominal ¼ in. (6.3 mm) thick, high density [90 lb/ft^3 ± 10 lb/ft^3 (1445 kg/m^3 ± 160 kg/m^3)], and uncoated. Where metal rods are specified as supports, 1.4 in. (6.3 mm) diameter metal rods spanning the width of the tunnel should be used. Rods should be placed approximately 2 in. ± 0.5 in. (51 mm ± 12 mm) from each end of each panel, and additional rods should be placed approximately at 2 ft ± 2 in. (610 mm ± 51 mm) intervals, starting with the first rod at the fire end of each panel. Where poultry netting is specified as support in conjunction with metal rods, the netting should be 20 gauge (51 mm ± 3 mm) hexagonal galvanized steel poultry netting conforming to ASTM A 390, *Standard Specification for Zinc-Coated (Galvanized) Steel Poultry Fence Fabric (Hexagonal and Straight Line).*

B.2 Acoustical and Other Similar Panel Products of Less Than 20 in. (508 mm).

B.2.1 For acoustical materials and other similar panel products with a maximum dimension of less than 20 in. (508 mm), metal splines or wood furring strips and metal fasteners should be used.

B.2.2 Steel tee splines for mounting kerfed-acoustical tile should be nominal ½ in. (12.7 mm) web × ¾ in. (19 mm) flange, formed No. 24 MS gauge sheet metal.

B.2.3 Wood furring frames for mounting acoustical materials and other similar panel products of less than 20 in. (508 mm) should be nominal 1 in. × 2 in. (25.4 mm × 51 mm) wood furring joined with corrugated metal fasteners. Two frames should be used, as shown in Figure B.2.3.

B.3 Adhesives. To determine the surface burning characteristics of adhesives, they are to be mixed as specified in the manufacturer's instructions and applied to inorganic-reinforced cement board in the thickness or at the coverage rate recommended by the manufacturer. The adhesive application should be cured prior to testing.

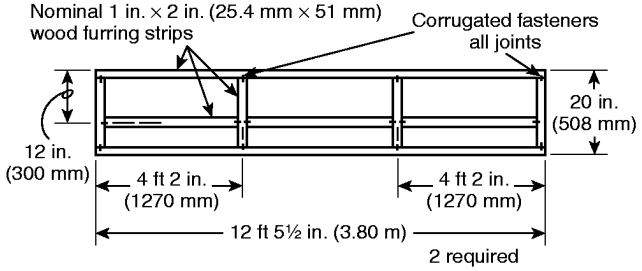

FIGURE B.2.3 Wood Frame for Acoustical Materials and Other Similar Panel Products of Less Than 20 in. (508 mm).

Copyright National Fire Protection Association
Provided by IHS under license with NFPA
No reproduction or networking permitted without license from IHS
Not for Resale

B.4 Batt- or Blanket-Type Insulating Materials. Batt or blanket materials that do not have sufficient rigidity or strength to support themselves should be supported by metal rods inserted through the material and positioned so that the bottom of the rod is approximately ¼ in. (6.3 mm) from the surface to be exposed to the flame. It is recommended that batt or blanket materials less than 1 in. (25.4 mm) thick not be mounted for testing in this manner.

B.5 Coating Materials, Cementitious Mixtures, and Sprayed Fibers.

B.5.1 Coating materials, cementitious mixtures, and sprayed fibers are to be mixed and applied to the substrate as specified in the manufacturer's instructions at the thickness, coverage rate, or density recommended by the manufacturer.

B.5.2 Materials intended for application to wood surfaces should be applied to a substrate made of nominal 25/32 in. (19.8 mm) tongue-and-groove red oak flooring or to other materials for which the surface burning characteristic is to be measured. The pieces are placed side by side and secured with four nailing strips spaced approximately 3½ ft (1.07 m) apart to hold the pieces together *(see Figure B.5.2)*. Two decks placed end to end are to be used.

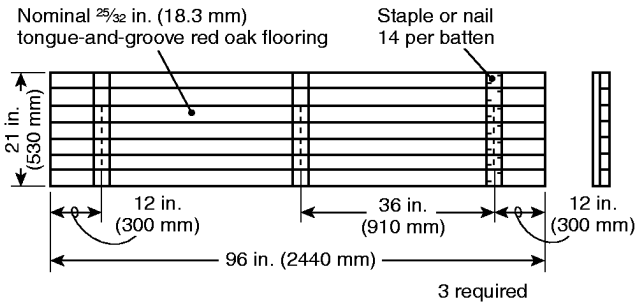

FIGURE B.5.2 Wood Deck for Coating Material.

B.5.3 Materials intended for application to particular combustible surfaces, but not wood, should be applied to those specific surfaces.

B.5.4 Materials intended for field application to noncombustible surfaces only should be applied to ¼ in. (6.3 mm) inorganic-reinforced cement board.

B.6 Loose-Fill Insulation. Loose-fill insulation should be placed on galvanized steel screening with openings of approximately 3/64 in. (1.2 mm) supported on a test frame 20 in. (508 mm) wide × 2 in. (51 mm) deep, made from steel angles of 2 in. × 3 in. × 3/16 in. (51 mm × 76 mm × 4.8 mm). Three frames are needed *(see Figure B.6)*. The insulation should be packed to the density specified by the manufacturer.

B.7 Plastics.

B.7.1 The term *plastics* includes foams, reinforced panels, laminates, grids, and transparent or translucent sheets.

B.7.2 Where any plastic remains in position in the tunnel during a fire test, no additional support is necessary. Thermoplastic materials and other plastics that do not remain in place should be supported by ¼ in. (6.3 mm) round metal rods or 3/16 in. (4.8 mm) thick × 2 in. (51 mm) wide steel bars, or 2 in. (51 mm) galvanized hexagonal wire mesh supported with metal bars or rods spanning the width of the tunnel.

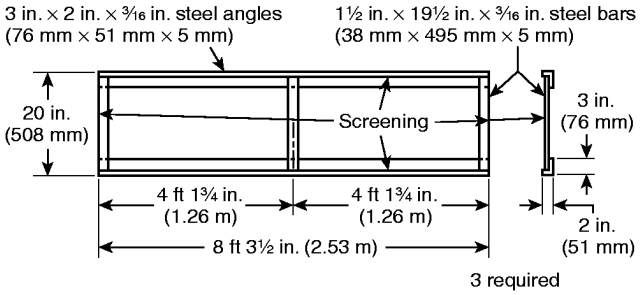

FIGURE B.6 Steel Frame for Loose-Fill Materials.

B.8 Thin Membranes. Single-layer membranes of thin laminates consisting of a limited number of similar or dissimilar layers can be supported on poultry netting placed on metal rods as provided in B.1.4. For specimens intended for field application to substrates, the specimen should be tested while bonded to a substrate representative of a field installation.

B.9 Wall Coverings.

B.9.1 Whenever an adhesive is used to attach a wall covering, adhesives specified by the manufacturer should be used in the test in a manner consistent with field practice.

B.9.2 Wall coverings intended for application directly to a noncombustible wall surface should be mounted to ¼ in. (6.3 mm) inorganic-reinforced cement board unless tested in accordance with B.9.3 or B.9.4.

B.9.3 Wall coverings intended for application over gypsum board should be tested over 5/8 in. (15.9 mm) type X gypsum wallboard complying with ASTM C 36/C36M, *Standard Specification for Gypsum Wallboard*. There is no need to mount the gypsum wallboard on studs.

B.9.4 Wall coverings intended for application over any other substrate should be tested over that substrate.

B.9.5 Wall coverings not intended to be adhered directly to a wall surface but suspended or otherwise supported by framing or a track system should be mounted for test in a manner that is representative of their installation.

B.10 Bonding. Where the surface burning characteristics of the material itself are required, specimens should be mounted on inorganic-reinforced cement board with Sairmix No. 7 high-temperature bonding mortar or the equivalent. If the specimen cannot be adhered using Sairmix No. 7, Kentile No. 9 epoxy has been found to be a suitable alternative. The application should be determined by a 3/32 in. (2.4 mm) notched trowel held at an 80 degree to 90 degree angle using a random pattern. The adhesive should be applied only to the specimen back. The specimen then should be placed on the smooth side of the inorganic-reinforced cement board and rolled using a 100 lb (54.4 kg) roller [nominal 5 in. (127 mm) long sections placed end to end for a total length of 15 in. (381 mm)]. The prepared samples can be dead-stacked overnight but should be transferred to separate storage racks until tested. Each sample should be vacuumed prior to testing.

NOTE 1: Sairmix No. 7 high-temperature bonding mortar was manufactured by A.P. Green Refractories, Green Boulevard, Mexico, MO 65265.

NOTE 2: Kentile No. 9 epoxy was manufactured by Kentile Floors, Inc., Brooklyn, NY 11215.

Copyright National Fire Protection Association
Provided by IHS under license with NFPA
No reproduction or networking permitted without license from IHS
Not for Resale

Annex C Derivation of Flame Spread Area Formulas in Section 5.3

This annex is not a part of the requirements of this NFPA document but is included for informational purposes only.

C.1 Introduction.

C.1.1 This annex contains an abbreviated discussion of the derivations of the flame spread area formulas used to calculate the flame spread value in this test method. This annex not only provides the derivations of the formulas but illustrates the relationship between this method of flame spread calculation and a previous method.

C.1.2 In these calculations, it is assumed that the flame front never recedes. Therefore, in Figure A.5.3.1.1, an imaginary line borders the upper edge of area A_2.

C.2 Formula 1 Constant. In Figure C.2, an idealized straight-line flame spread distance–time curve is plotted. The plots for $0A$, $0A'$, and $0A''$ create a combined area, $0RA$. $0RA$ has a maximum possible area of 97.5 min-ft (½ × 10 min × 19.5 ft) [29.7 min-m (½ × 10 min × 5.94 m)]. These straight-line plots represent a steady progression of the flame front to a maximum distance at the end of the 10-minute test.

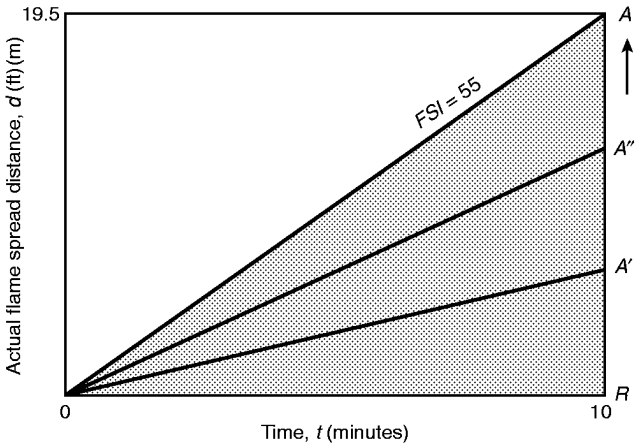

FIGURE C.2 Idealized Straight-Line Flame Spread Distance–Time Curve for Total Areas Less Than or Equal to 97.5 min-ft (29.7 min-m).

C.2.1 Where the flame front spreads for its maximum distance of 19.5 ft (5.94 m) in 10 minutes, a formula used in Section 5.3 would yield the following:

$$FSI = \frac{550}{t} = \frac{550}{10}$$

where:
FSI = flame spread index
t = time

C.2.2 Where the flame front is maximized at 19.5 ft (5.94 m) in 10 minutes, the area in Figure C.2, $0RA$, is maximized to 97.5 min-ft (29.7 min-m).

C.2.3 To relate the current formula, which is of the straight-line, origin intercept type, to the formula specified in C.2.1, it is necessary to express the flame spread index as follows:

$$FSI = \frac{550}{t} = KA_T$$

where:
K = proportionality constant for equations of the current formula
A_T = total area under area $0RA$ in Figure C.2

If A_T = 97.5 min-ft (29.7 min-m) at t = 10 min, then

$$FSI = \frac{550}{10} = K \times 97.5$$

and

$$K = \frac{550}{10 \times 97.5} = 0.564$$

Applying the value of K as derived in C.2.3, the formula in 5.3.1.2 for areas (A_T) of 97.5 min-ft (29.7 min-m) or less is as follows:

$$FSI = 0.564A_T$$

C.3 Formula 2 Constant. In the idealized straight-line flame spread distance–time curve of Figure C.3, lines $0I$, $0I'$, and $0I''$ create a group of trapezoidal areas, $0RBI$, ranging from 97.5 min-ft to 195 min-ft (29.7 min-m to 59.4 min-m) [½ × 10 min × 19.5 ft (5.94 m) to 10 min × 19.5 ft (5.94 m)]. This represents a flame front progression to the end of the specimen within the 10-minute test. The area (A_T) of $0RBI$ is expressed as follows:

$$\left(\frac{1}{2} \times 19.5 \times 0R\right) + \left[\frac{1}{2} \times 19.5 \times (10 - AI)\right]$$

which is equal to

$$195 - 9.75AI, \quad \text{since } 0R \text{ is always 10 minutes}$$

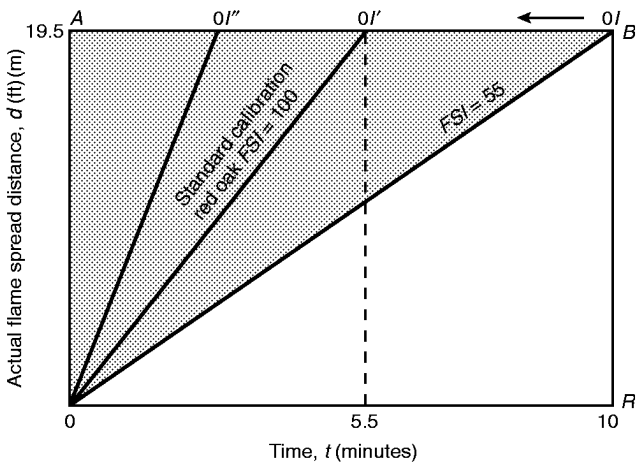

FIGURE C.3 Idealized Straight-Line Flame Spread Distance–Time Curve for Total Areas Greater Than 97.5 min-ft (29.7 min-m).

Copyright National Fire Protection Association
Provided by IHS under license with NFPA
No reproduction or networking permitted without license from IHS
Not for Resale

C.3.1 The triangular area, $0IA$, divided into a proportionality constant, K, determines the relationship between flame spread values and the rate and distance of flame propagation. The total area available is 195 min-ft (59.4 min-m); therefore, area $0IA$ is equal to 195 $0RBI$. Thus, a new flame spread formula can be derived as follows:

$$FSI = \frac{K}{0IA} = \frac{K}{195 - 0RBI} = \frac{K}{195 - A_T}$$

C.3.2 To establish K, a relationship between the current and previous formulas is established at the red oak calibration point of 19.5 ft (5.94 m) progression at 5.5 minutes as follows:

$$FSI = \frac{550}{1} = \frac{K}{195 - A_T}$$

where:
A_T = 195 – [9.75(5.5)] = 141.38 min-ft
I = 5.5 minutes

Thus,

$$FSI = \frac{550}{I} = \frac{K}{195 - 141.38}$$

or

$$K = \frac{550 \times (53.63)}{5.5} = 5363$$

C.4 Formula 1 and Formula 2.

C.4.1 To account for the disproportionate increase that can occur in FSI values at the lower end of the index scale, for K= 0.564 in Formula 1 and K= 5363 in Formula 2, a further mathematical modification is made.

C.4.2 To establish the relationship between the constants (K) in Sections C.2 and C.3, it is necessary to consider the forms of the basic formulas, which are as follows:

$$FSI = \frac{K_1}{195 - A_T} \quad (A > K_2)$$

$$FSI = K_3 A_T \quad (A < K_2)$$

where:
K_1 = 100(195 – R)
R = area under the curve that is to be associated with an index of 100
K_2 = arbitrary choice within the limits of 0 and 195
K_3 = $K_1/[K_2(195 - K_2)]$

C.4.3 Choosing K_2 = 195 ÷ 2 produces a minimum value of K_3; that is, any other K_2 value will result in a higher K_3 value. Choosing R, the area under a red oak calibration plot, as a median value of 146 implies the following:

$$K_1 = 100(195 - 146) = 4900$$

C.4.4 Using 97.5 as the value for K_2, the formula for K_3 is as follows:

$$K_3 = \frac{4900}{97.5 \times 97.5} = 0.515$$

Therefore, the formula for the flame spread index in 5.3.1.2 is as follows:

$$FSI = 0.515 A_T$$

Therefore, the formula for the flame spread index in 5.3.1.3 is as follows:

$$FSI = \frac{4900}{195 - A_T}$$

Annex D Commentary

This annex is not a part of the requirements of this NFPA document but is included for informational purposes only.

D.1 Introduction.

D.1.1 This commentary has been prepared to provide the user of NFPA 255 with background information, including references, on the development and use of this method. It also provides the reader and user with the basis for the methods that have been used for deriving numerical flame spread indexes (FSI), an appreciation of the variability of the test, and comments on its application and limitations for testing selected types of materials.

D.1.2 On November 28, 1942, a total of 490 people died in a fire in the Coconut Grove Nightclub in Boston. On June 5, 1946, more than 60 people died in the La Salle Street Hotel fire in Chicago. On December 7, 1946, a fire in the Winecoff Hotel in Atlanta, Georgia, claimed the lives of 119 people. These fires had one thing in common: in all three fires, rapid flame spread along the surfaces of interior finish was judged to be a major factor in fire growth. Two of the structures had burlap wall coverings, and the other had an early type of plywood that had seriously delaminated.

D.1.2.1 Following those tragedies, fire protection authorities investigated several test methods with the objective of providing one that could be used to regulate interior finish materials and minimize repetition of such fires. These tests, all relatively small laboratory tests, included the following:

(1) Forest Products Laboratory Fire Tube Test (now ASTM E 69, *Standard Test Method for Combustible Properties of Treated Wood by the Fire-Tube Apparatus*)
(2) Federal Specification SS A118b (acoustical tile/bunsen burner test, replaced by SS-A-118a-7/63, referencing ASTM E 84, *Standard Test Method for Surface Burning Characteristics of Building Materials*)
(3) New York City Timber Test and Shavings Test (now obsolete)
(4) Crib Test, ASTM Specification C 160-41 T (now ASTM E 160, *Test Method for Combustible Properties of Treated Wood by the Crib Test*)
(5) Swedish Schlyter Test [1]

D.1.2.2 ASTM E 84/NFPA 255 was developed on the premise that a large test would provide more realistic and comprehensive results, and it has since been widely adopted for use by the building code authorities to regulate the use of interior finish materials.

D.1.2.3 Subsequently, during this same period, two other test methods were developed for the NBS radiant panel test (ASTM E 162, *Standard Test Method for Surface Flammability of Materials Using a Radiant Heat Energy Source*) and the FPL 8-foot tunnel test [ASTM E 286, *Test Method for Surface Flammability of Building Materials Using an 8-ft (2.44-m) Tunnel Furnace*]. While ASTM E 162 is still widely used, especially in the transportation industry, ASTM E 286 has been discontinued by ASTM and is no longer in use.

Copyright National Fire Protection Association
Provided by IHS under license with NFPA
No reproduction or networking permitted without license from IHS
Not for Resale

D.2 History of ASTM E 84/NFPA 255.

D.2.1 The first tunnel-type furnace was built at Underwriters Laboratories around 1922, when fireproofing paints and specifically whitewash were actively promoted. The equipment consisted of a long bench with a noncombustible top. The sample consisted of a wood trough about 16 ft long × 18 in. wide × 18 in. deep (4.88 m long × 0.46 m wide × 0.46 m deep), placed upside down on the bench. The inside of the trough was coated with the paint. A known quantity of wood at one end furnished the ignition source.

D.2.2 In 1927 and 1928, chemically impregnated wood was being developed, and Underwriters Laboratories used a tunnel 36 in. wide × 23 ft long × 13 in. deep (0.914 m wide × 7.0 m long × 0.33 m deep) to evaluate its performance. It was during this time that red oak flooring was selected as a control to be used to calibrate the furnace. The sample formed the top of the tunnel. The fuel and draft also were controlled.

D.2.3 In the early 1940s, a desire to reduce the flammability of wood-based products and the introduction of new building materials and combinations of materials created a need to improve the tunnel further. The development of the third tunnel furnace is explained fully in Underwriters Laboratories Bulletin of Research No. 32. [2]

D.2.3.1 Subsequent refinements were incorporated, and the first formal test method was published as UL 723, *Standard for Test for Surface Burning Characteristics of Building Materials*, by Underwriters Laboratories in August 1950. Subsequent revised editions were published.

D.2.3.2 In 1955, the National Fire Protection Association adopted a test method functionally identical to UL 723 as NFPA 255. The test was adopted by ASTM as a tentative standard in 1950 and formally adopted in 1961 as ASTM E 84. Both NFPA 255 and ASTM E 84 have since been revised periodically.

D.2.4 The tunnel has been designated the "Steiner Tunnel" by Underwriters Laboratories in honor of Albert J. Steiner, who spent much time developing this and many other fire test methods.

D.2.5 Since 1950, the flame spread properties of materials, as measured by this method, have been reported as ratings, classifications, or indexes. An index is considered more indicative of the nature of the results and is the present terminology used in the standard.

D.2.5.1 The original method of determining flame spread index was based on either the ratio of the time at which flames traveled the full tunnel length or the partial flame travel distance relative to that of red oak.

D.2.5.2 In 1968, a change was made in the FSI calculation to account for an anomaly between results for flame spread greater than or less than 13½ ft (4.1 m). In 1976, the flame spread index was revised to be based on area. The total area under the distance–time curve, ignoring any flame front recession, was compared to a specified area typical of the burning of red oak flooring. The current calculation method (*see Annex C*) uses a formula that takes into account the rate of flame travel.

D.2.6 The sensitivity study by Endicott and Bowhay in 1970 has led to a concerted effort by the ASTM tunnel operators group to address concerns identified by that study. [3] Since 1975, a series of changes have been specified in the standard. These include defining the duration of furnace preheating, the incorporation of a floor thermocouple, and the specification of the details of furnace construction and standardization.

D.2.7 Particular attention has been paid to the refinement of the apparatus and procedure involved in the measurement of the smoke generated during testing. Round-robin tests that have been conducted to date have indicated large differences in smoke development values for interlaboratory tests on replicate specimens. [4]

D.2.8 Some of these revisions noted in Section D.2 include standardization of the smoke-density measuring equipment, its location in the exhaust duct, and its orientation. The measurement of smoke density is reported in terms of the area under the light absorption–time curve relative to a similar curve for red oak. Because the quality of vision-obscuring particles in the smoke column is not linearly related to light absorption, this procedure has been criticized by some parties. The method does, however, provide a basis for comparisons.

D.2.9 In 1970, a revision to the scope of this standard was adopted to emphasize that there was no direct relationship between the flame spread index (FSI) and the fuel contributed or smoke density index (SDI). This revision was deemed necessary because some enforcement officials were assigning equal significance to the values.

D.2.10 Prior to 1978, the report of tests included an evaluation of the fuel contribution as well as the FSI and SDI. However, it is now recognized that the rise in temperature of the thermocouple located near the end of the tunnel, where the thermocouple is based, does not provide a valid measure of fuel contribution. Therefore, although the data are recorded during the test, this information is no longer normally reported.

D.2.11 Annex B, adopted in 1968, was intended as a guide for the mounting of specimens and is not a mandatory part of the method, since the intent of the method is that the specimen be tested as closely as possible to the manner in which it is to be applied in general use. In 1978, revisions were made to the annex that dealt with the testing of adhesives, the description of a wood substrate for testing coatings, and the definition of the properties of the reinforced cement board used as a standard backing and the metal rods used as supports. For the 2006 edition, Annex B was moved to the body of NFPA 255 as Chapter 6 and was written in mandatory language.

D.3 Fire Exposure Conditions.

D.3.1 The tunnel test fire exposure is provided by a 4½ ft (1.37 m) long test flame covering approximately 7 ft^2 (0.65 m^2) of the 36 ft^2 (3.34 m^2) of the exposed specimen surface during the 10-minute test period. It releases heat at a rate of approximately 5000 Btu/min (88 kW) and creates gas temperatures near the specimen surface of up to 1600°F (900°C).

D.3.2 The size and heat release rate of the exposing flame developed after repeated experimental tests, although not optimum fire conditions, were selected to produce a flame spread over the entire length of the calibration material in about 5½ minutes. [5] It was found that conditions could be changed so that flames would spread faster, but these conditions caused the flame to spread too fast to make the necessary observations of the flame spread, smoke density, and temperature rise of the thermocouple.

D.4 Furnace Calibration.

D.4.1 Select red oak was chosen as a control material because it is a fairly uniform grade of lumber that is nationally recognized, whereas many other types have a purely local significance. It is readily available, is usually uniform in thickness and moisture

Copyright National Fire Protection Association
Provided by IHS under license with NFPA
No reproduction or networking permitted without license from IHS
Not for Resale

content, and generally provides repetitive results. In recent years, experiments have used man-made materials, such as particle board, in the hope of further refining repeatability; however, red oak is still used as a calibrating material.

D.4.2 The operating conditions of the tunnel are adjusted if necessary to ensure that the flame spreads to the end of the tunnel in 5.5 minutes ± 0.25 minute using a specimen of red oak flooring. Tests are run with a reinforced cement board (ACB) specimen to establish the distance of the exposing flame at 4½ ft (1.37 m). The calibration specifies only the time at which the flame passes over the end of the specimen. The FSI is determined by dividing the area under the flame spread by the time curve. Therefore, the FSI of red oak is no longer exactly 100 as originally specified.

D.4.3 Recognition of the importance of turbulence, including the role of fire bricks and of window recesses, resulted in a revision in the method in 1976.

D.5 Repeatability and Reproducibility.

D.5.1 Four round-robin tests have been conducted. The first took place in 1958 and was conducted by Underwriters Laboratories and Southwest Research Institute; the second, in 1959, was sponsored by the former Acoustic Tile Association and was conducted by four laboratories using four different tiles; the third, in 1973, was conducted on floor coverings by the National Bureau of Standards in cooperation with 11 laboratories; and the fourth, in 1978, on loose-fill cellulosic insulation, was conducted by the Consumer Product Safety Commission using six laboratories. [4, 6]

D.5.2 Other tests are now in progress under the auspices of ASTM Committee E-5. A precision and accuracy statement is being prepared. In the interim, the reader is directed to the round-robin reports if information on precision and accuracy is needed.

D.5.3 An ASTM task group of Subcommittee E05.22, composed of tunnel operators, is reviewing comprehensive design and operational and procedural revisions to improve uniformity among facilities.

D.6 Advantages and Problems. Test results from this standard generally have shown performance similar to that observed during accidental building fires for some materials and exposure. It should be emphasized, however, that it is the intent of the method to provide only comparative classifications.

D.6.1 The test method provides a large, flaming fire exposure, with specimen thermal exposure and area coverage sufficient to bring about progressive surface burning and combustible volatile generation characteristics of the materials under evaluation, resulting in a moving, wind-aided flame front.

D.6.2 The test method involves a large specimen, nominally 36 ft^2 (3.34 m^2) of exposed area, which allows realistic fire involvement of material surfaces and the development of physical and structural failures (e.g., collapse, buckling, large ruptures, or cracks) that can influence flammability performance during the test.

D.6.3 The test method can be applied to a wide range of materials, including composite constructions of faced or laminated boards, panels, units, or sections in actual field-installed thicknesses.

D.6.4 The test method can be used to measure the effects of density, thickness, surface contour, surface finish, delamination, strength, and joint design on the surface flammability of the specimen.

D.6.5 The test method characterizes most high flame spread materials that have been involved in rapidly developing field fires (e.g., highly combustible coatings on wood products, certain cellulosic acoustical materials, and insulation facings applied with combustible adhesives) and provides an accurate characterization of the performance of some low flame spread materials in actual fires (e.g., gypsum and mineral products).

D.6.6 Although the test measures surface burning characteristics, the visual observation of flame travel is based on maximum flame extension anywhere within the tunnel volume, not necessarily directly on a specimen surface that is not necessarily clearly visible. Surface flammability measurements of building materials do not yield a unique material property. Rather, the measurement is highly influenced by the method of test used.

D.7 Uses and Limitations.

D.7.1 The orientation of the specimen in this method is in a horizontal ceiling position. This orientation places some limitations on the type of material that can be realistically mounted during testing. Prior to 1960, the tunnel was used primarily for the investigation of the surface burning characteristics of homogeneous compositions of ceiling and wall finishes, such as acoustical tiles, wall coverings, coatings, and various types of decorative panel, with all materials able to remain in the ceiling position throughout the test.

D.7.2 Through adaptation (see Annex B), the test procedure was expanded to include the evaluation of composites and assemblies. Annex B contains mounting method recommendations for a number of categories of materials. Special mounting methods should be used for any materials for which no recommendations are presented; the mounting methods used should represent a reasonable representation of the field use of the material to be tested.

D.7.3 The difficulty of defining materials that contribute little or no fuel to a fire has in the past led to the use of ASTM E 84/NFPA 255 to provide information about the combustibility of materials. ASTM Committee E-5 and the NFPA Technical Committee on Fire Tests do not and have not ever recommended that the results of these tests alone be used to describe material combustibility.

D.7.4 Composite assemblies or panels that use metal or mineral facings and combustible interior cores, and that remain essentially impermeable to flame throughout the test, might not be completely evaluated for surface burning behavior by this method, since the interior cores are not fully challenged.

D.7.5 Some materials require support to remain in place during the test, such as loose-fill insulation supported by a metal screen. The supporting screen tends to produce low flame spread indexes relative to those obtained for materials that are not so supported. Conversely, materials that are supported on rods, such as batt insulation, can produce higher FSIs if retained on the ceiling rather than allowed to burn on the floor.

D.7.6 Some materials, such as composites, can delaminate during the test. Delamination can cause either of the following possible responses:

(1) The material can expose two or more surfaces to the flame, increasing the FSI.
(2) The material can sag or one end can drop into the fire chamber, impeding further flame spread.

Copyright National Fire Protection Association
Provided by IHS under license with NFPA
No reproduction or networking permitted without license from IHS
Not for Resale

D.7.7 Some materials, such as cellular plastics and thermoplastic and thermosetting materials, can be difficult to evaluate. Thermoplastic and thermosetting materials that are not mechanically fastened often fall to the floor of the tunnel and usually produce relatively low FSIs. If supported on wire screen, rods, or other supports, these materials can become completely engulfed in flame, thereby creating a questionable comparison between the surface flame spread of nominal 1 in. (25.4 mm) thick red oak and the burning rate of these materials.

Where the entire specimen is consumed, as opposed to the surface burning of red oak, much more oxygen is used and higher smoke developed indexes are usually obtained for these materials.

D.7.8 The materials described in this section, (i.e., those that drip, melt, delaminate, draw away from the fire, or need artificial support) present unique problems and necessitate careful interpretation of the test results. Some of these materials that are assigned a low FSI based on this test method can exhibit an increasing propensity for generating flameover conditions during room fire tests with increasing area of material exposure and increasing intensity of fire exposure. The result, therefore, might not be indicative of their performance if evaluated under large-scale test procedures. Alternative means of testing could be necessary to fully evaluate some of these materials.

D.7.9 To provide needed technical data, flammability evaluations of cellular plastics for building construction using the Steiner Tunnel began with the testing and classification of a flame retardant formulation of polystyrene foam board in 1960, with subsequent evaluation of polyurethane-type boards incorporating flame-retarded resin systems (first generation) beginning in 1964, polymerically and chemically modified flame retarded polyurethane-type formulations (second generation) in 1965, polyisocyanurate-type foams initiated in 1968, and, most recently, urea-formaldehyde-type, cavity-fill foams. Spray-applied and poured-in-place cellular foam systems were first subjected to the test in 1968 and 1972, respectively.

D.7.10 From 1960 through 1973, over 2000 tunnel tests have been conducted on flame retarded and general-purpose polystyrene, polyurethane, polyisocyanurate, and urea-formaldehyde cellular plastics, in board-stock, spray-applied, or poured-in-place forms, yielding flame spread index values ranging from less than 5 to over 2000. [7]

D.7.11 The flame spread index of some materials varies depending on environmental conditions. The prescribed limits on the temperature and relative humidity for specimen conditioning and tunnel air supply [both 73.4°F ± 5°F (23°C ± 2.8°C), 50 percent rh ± 5 percent rh] were selected to minimize these effects.

D.8 Correlation with Other Fire Conditions. Several studies have examined the relationship of the flame spread index test results on materials to the performance of the same materials in large-scale fire growth experiments and in other laboratory test methods. Some comparisons with large-scale experiments are provided in the notes to this appendix. Comparisons also have been made between the NFPA 255/ASTM E 84/UL 723 test and other tests, including ASTM E 162, *Standard Test Method for Surface Flammability of Materials Using a Radiant Heat Energy Source,* and some discontinued tests. Results from this test method, particularly for very thin materials, do not always correlate with those of large-scale fire growth experiments, such as the room corner tests in NFPA 265, *Standard Methods of Fire Tests for Evaluating Room Fire Growth Contribution of Textile Coverings on Full Height Panels and Walls,* or NFPA 286, *Standard Methods of Fire Tests for Evaluating Contribution of Wall and Ceiling Interior Finish to Room Fire Growth.* [8] However, it has been shown that NFPA 255 is a suitable indicator of low tendencies in flame spread and smoke development for materials that are self-supporting or that can be adequately represented by test samples and that are thermally thick. [9]

D.9 Engineering Calculations. The *Life Safety Code,* NFPA *101,* explains also that the test results from this test method are, for many materials, suitable for classification purposes but should not be used as input into fire models, because they are not generated in units suitable for engineering calculations.

D.10 Notes to Annex D.

(1) A. J. Steiner, *Building Officials Conference of America Yearbook,* 1949–1950, pp. 115–116.
(2) Underwriters Laboratories Inc., "Fire Hazard Classification of Building Materials," Bulletin of Research No. 32, Chicago, IL, September 1947.
(3) L. E. Endicott and R. B. Bowhay, "A Statistical Evaluation of the Fire Hazard Classification Furnace" (ASTM E 84-68), ASTM Materials Research and Standards, May 1970, pp. 19–21, 50–52.
(4) "Round-Robin Tests on Tunnel Type Flame Spread Furnaces," for ASTM Project No. 1-811-2, Final Report, Southwest Research Institute, San Antonio, TX, April 16, 1959.
(5) A. J. Steiner, "Burning Characteristics of Building Materials," *Fire Engineering,* May 2, 1951.
(6) T. G. Lee and C. Huggett, "Interlaboratory Evaluation of the ASTM E 84-70 Tunnel Test Applied to Floor Coverings," *Journal of Testing and Evaluation,* vol. 3, no. 1, ASTM, 1975.
(7) Underwriters Laboratories Inc., "Flammability Studies of Cellular Plastics and Other Building Materials Used for Interior Finish," Subject 723, UL Inc., Northbrook, IL, June 13, 1975.
(8) D. W. Belles, F.L. Fisher, and R. B. Williamson, "How well does the ASTM E84 predict fire performance of textile wallcoverings?" *Fire J.,* 82(1), pp. 24-30, 74 (1998).
(9) R. H. White, M. A. Dietenberger, H. Tran, O. Grexa, L. Richardson, K. Sumathipala, and M. L. Janssens, "Comparison of test protocols for the standard room/corner test," *Fire and Materials,* vol. 23, pp. 139-146 (1999).

Annex E Informational References

E.1 Referenced Publications. The documents or portions thereof listed in this annex are referenced within the informational sections of this standard and are not part of the requirements of this document unless also listed in Chapter 2 for other reasons.

E.1.1 NFPA Publications. National Fire Protection Association, 1 Batterymarch Park, Quincy, MA 02169-7471.

NFPA *101®, Life Safety Code®,* 2006 edition.

NFPA 251, *Standard Methods of Tests of Fire Resistance of Building Construction and Materials,* 2006 edition.

NFPA 265, *Standard Methods of Fire Tests for Evaluating Room Fire Growth Contribution of Textile Coverings on Full Height Panels and Walls,* 2002 edition.

NFPA 286, *Standard Methods of Fire Tests for Evaluating Contribution of Wall and Ceiling Interior Finish to Room Fire Growth,* 2006 edition.

Copyright National Fire Protection Association
Provided by IHS under license with NFPA
No reproduction or networking permitted without license from IHS
Not for Resale

E.1.2 Other Publications.

E.1.2.1 ASTM Publications. American Society for Testing and Materials, 100 Barr Harbor Drive, West Conshohocken, PA 19428-2959.

ASTM A 390, *Standard Specification for Zinc-Coated (Galvanized) Steel Poultry Fence Fabric (Hexagonal and Straight Line)*, 2001.

ASTM C 36/C36M, *Standard Specification for Gypsum Wallboard*, 2003.

ASTM E 69, *Standard Test Method for Combustible Properties of Treated Wood by the Fire-Tube Apparatus*, 2002.

ASTM E 84, *Standard Test Method for Surface Burning Characteristics of Building Materials*, 1999.

ASTM E 160, *Test Method for Combustible Properties of Treated Wood by the Crib Test*, discontinued, 1993.

ASTM E 162, *Standard Test Method for Surface Flammability of Materials Using a Radiant Heat Energy Source*, 2002a.

ASTM E 286, *Test Method for Surface Flammability of Building Materials Using an 8-ft (2.44-m) Tunnel Furnace* (discontinued, 1991).

E.1.2.2 UL Publication. Underwriters Laboratories Inc., 333 Pfingsten Road, Northbrook, IL 60062-2096.

UL 723, *Standard for Test for Surface Burning Characteristics of Building Materials*, 2003.

E.1.2.3 Additional Publications.

Belles, D. W., Fisher, F. L. and Williamson, R. B., "How well does the ASTM E84 predict fire performance of textile wallcoverings?" *Fire J.*, 82(1), pp. 24-30, 74 (1998).

Endicott, L. E., and R. B. Bowhay, "A Statistical Evaluation of the Fire Hazard Classification Furnace" (ASTM E 84-68), ASTM Materials Research and Standards, May 1970, pp. 19–21, 50–52.

Lee, T. G., and C. Huggett, "Interlaboratory Evaluation of the ASTM E 84-70 Tunnel Test Applied to Floor Coverings," *Journal of Testing and Evaluation*, vol. 3, no. 1, ASTM, 1975.

Southwest Research Institute, "Round-Robin Tests on Tunnel Type Flame Spread Furnaces," for ASTM Project No. 1-811-2, Final Report, San Antonio, TX, April 16, 1959.

Steiner, A. J., *Building Officials Conference of America Yearbook*, 1949–1950, pp. 115–116.

Steiner, A. J., "Burning Characteristics of Building Materials," *Fire Engineering*, May 2, 1951.

Underwriters Laboratories Inc., "Fire Hazard Classification of Building Materials," Bulletin of Research No. 32, Chicago, IL, September 1947.

Underwriters Laboratories Inc., "Flammability Studies of Cellular Plastics and Other Building Materials Used for Interior Finish," Subject 723, UL Inc., Northbrook, IL, June 13, 1975.

White, R. H., M. A. Dietenberger, H. Tran, O. Grexa, L. Richardson, K. Sumathipala, and M. L. Janssens, "Comparison of test protocols for the standard room/corner test," *Fire and Materials*, vol. 23, pp. 139-146 (1999).

E.2 Informational References. (Reserved)

E.3 References for Extracts in Informational Sections. (Reserved)

Copyright National Fire Protection Association
Provided by IHS under license with NFPA
No reproduction or networking permitted without license from IHS
Not for Resale

Index

© 2005 National Fire Protection Association. All Rights Reserved.

The copyright in this index is separate and distinct from the copyright in the document that it indexes. The licensing provisions set forth for the document are not applicable to this index. This index may not be reproduced in whole or in part by any means without the express written permission of NFPA.

-A-

Absorption–time smoke density 4.3.11.1
Acoustical and similar panel products B.2
Adhesives B.3
Advantages of test methods D.6
Application of standard 1.3

-B-

Baffles 4.1.3, A.4.1.3
Batt- or blanket-type insulation B.4, D.7.5
Bonding of specimen to cement board B.10

-C-

Calibration of test equipment ..... 4.3, A.4.3.2.2 to A.4.3.7.2, D.4
Cement board, inorganic-reinforced 4.3.1, 4.3.2, 4.3.12, A.4.3.2.2, B.1.4, B.10, D.2.11, D.4.2
Cementitious mixtures B.5
Coating materials B.5
Combustion products, analysis of 5.2
Commentary ..... Annex D
Conduct of tests ..... Chap. 5

-D-

Definitions ..... Chap. 3

-F-

Fire exposure conditions D.3
Fire test chamber ..... 4.1, A.4.1.1 to A.4.1.7
Calibration ..... 4.3, A.4.3.2.2 to A.4.3.7.2, D.4
Fire end 4.1.5
Preheating 4.3.7, A.4.3.7.2
Tunnel lid 4.1.4, A.4.1.4
Vent end 4.1.6
Flame spread D.2.5
Area formulas ..... 5.3.2, 5.3.3, Annex C
Distance 4.3.11, 5.1.7
Distance–time curve 4.3.11.1, 5.3.1, A.5.3.1, C.2, C.3
Flame spread index (FSI) ..... 4.3.11.3, 4.3.12.1, 5.4(4)(a), Annex C, D.2.9, D.2.10, D.4.2, D.7.5 to D.7.8, D.7.11
Correlation with other fire conditions D.8
Definition 3.3.1, A.3.3.1
Determination of 5.3, A.5.3.1
Furnace ..... *see* Fire test chamber

-H-

History of standard D.2

-I-

Insulation
Batt- or blanket-type B.4, D.7.5
Loose-fill B.6, D.7.5

-L-

Limitations of test method D.7
Loose-fill insulation B.6, D.7.5

-M-

Measurement, units of 1.4
Membranes, thin B.8
Moisture content, measurement of 4.3.9, 4.3.10
Mounting methods ..... Annex B, D.2.11, D.7.2

-P-

Photometric system 4.1.7, 4.1.8, A.4.1.7
Calibration of test equipment 4.3.9.5
Conduct of test 5.3.4.2
Test procedure 5.1.4, 5.1.7
Plastics B.7
Problems of test method D.6
Purpose of standard 1.2, A.1.2.2, A.1.2.3

-R-

Red oak, testing of 4.3.9, 4.3.10, 5.3.4.1, D.4.1, D.4.2
References ..... Chap. 2, Annex E
Repeatability and reproducibility of test D.5
Report of test results 5.4

-S-

Scope of standard 1.1
Shall (definition) 3.2.1
Should (definition) 3.2.2
Smoke developed index (SDI) ..... 4.3.11.3, 5.3.4, 5.4(4)(b), D.2.9, D.2.10
Definition 3.3.2, A.3.3.2
Smoke development D.2.7, D.2.8
Smoldering 5.1.6
Specimens, test 4.2
Sprayed fibers B.5
Standard (definition) 3.2.3
Steiner Tunnel D.2.4
Supplemental leakage test 4.3.3, 4.3.4, A.4.3.4

-T-

Temperature, measurement of 4.3.9.4, 4.3.11.1, 4.3.12.2, 5.1.7
Temperature–time curve 4.3.11.1, 4.3.12.2
Test procedure 5.1
Thin membranes B.8

-U-

Units of measurement 1.4
Uses of test method D.7

-W-

Wall coverings B.9

Copyright National Fire Protection Association
Provided by IHS under license with NFPA
No reproduction or networking permitted without license from IHS
Not for Resale

Sequence of Events Leading to Publication of an NFPA Committee Document

Call goes out for proposals to amend existing document or for recommendations on new document.

▼

Committee meets to act on proposals, to develop its own proposals, and to prepare its report.

▼

Committee votes on proposals by letter ballot. If two-thirds approve, report goes forward. Lacking two-thirds approval, report returns to committee.

▼

Report — *Report on Proposals* (ROP) — is published for public review and comment.

▼

Committee meets to act on each public comment received.

▼

Committee votes on comments by letter ballot. If two-thirds approve, supplementary report goes forward. Lacking two-thirds approval, supplementary report returns to committee.

▼

Supplementary report — *Report on Comments* (ROC) — is published for public review.

▼

NFPA membership meets (Annual or Fall Meeting) and acts on committee report (ROP or ROC).

▼

Committee votes on any amendments to report approved at NFPA Annual or Fall Meeting.

▼

Appeals to Standards Council on Association action must be filed within 20 days of the NFPA Annual or Fall Meeting.

▼

Standards Council decides, based on all evidence, whether or not to issue standard or to take other action, including upholding any appeals.

Committee Membership Classifications

The following classifications apply to Technical Committee members and represent their principal interest in the activity of the committee.

M *Manufacturer:* A representative of a maker or marketer of a product, assembly, or system, or portion thereof, that is affected by the standard.

U *User:* A representative of an entity that is subject to the provisions of the standard or that voluntarily uses the standard.

I/M *Installer/Maintainer:* A representative of an entity that is in the business of installing or maintaining a product, assembly, or system affected by the standard.

L *Labor:* A labor representative or employee concerned with safety in the workplace.

R/T *Applied Research/Testing Laboratory:* A representative of an independent testing laboratory or independent applied research organization that promulgates and/or enforces standards.

E *Enforcing Authority:* A representative of an agency or an organization that promulgates and/or enforces standards.

I *Insurance:* A representative of an insurance company, broker, agent, bureau, or inspection agency.

C *Consumer:* A person who is, or represents, the ultimate purchaser of a product, system, or service affected by the standard, but who is not included in the *User* classification.

SE *Special Expert:* A person not representing any of the previous classifications, but who has a special expertise in the scope of the standard or portion thereof.

NOTES:

1. "Standard" connotes code, standard, recommended practice, or guide.
2. A representative includes an employee.
3. While these classifications will be used by the Standards Council to achieve a balance for Technical Committees, the Standards Council may determine that new classifications of members or unique interests need representation in order to foster the best possible committee deliberations on any project. In this connection, the Standards Council may make such appointments as it seems appropriate in the public interest, such as the classification of "Utilities" in the National Electrical Code Committee.
4. Representatives of subsidiaries of any group are generally considered to have the same classification as the parent organization.

Copyright National Fire Protection Association
Provided by IHS under license with NFPA
No reproduction or networking permitted without license from IHS
Not for Resale

NFPA Technical Committee Document Proposal Form

Note: All proposals must be received by 5:00 p.m. EST/EDST on the published proposal closing date.

For further information on the standards-making process, please contact Codes and Standards Administration at 617-984-7249. For technical assistance, please call NFPA at 617-770-3000.

FOR OFFICE USE ONLY
Log #: _____
Date Rec'd: _____

Please indicate in which format you wish to receive your ROP/ROC: ☐ **CD ROM** ☐ **paper** ☐ **download**
(Note: In choosing the download option you intend to view the ROP/ROC from our Website. No copy will be sent to you.)

Date 12/18/02 **Name** John B. Smith **Telephone** 617-555-1212
Company _____
Address 9 Seattle St. **City** Seattle **State** WA **Zip** 02255
Please indicate organization represented (if any) Fire Marshals Assn. of North America

1. a) **NFPA Document Title** National Fire Alarm Code
   b) **NFPA No. & Edition** NFPA 72, 2002 ed. **c) Section/Paragraph** 4.4.7.1.1

2. **Proposal Recommends:** *(check one)* ☐ **new text** ☐ **revised text** ☒ **deleted text**

3. **Proposal.** *(Include proposed new or revised wording, or identification of wording to be deleted.)* Note: Proposed text should be in legislative format, that is, use underscore to denote wording to be inserted (inserted wording) and strike-through to denote wording to be deleted (~~deleted wording~~). Delete exception.

4. **Statement of Problem and Substantiation for Proposal.** Note: State the problem that will be resolved by your recommendation. Give the specific reason for your proposal including copies of tests, research papers, fire experience, etc. If more than 200 words, it may be abstracted for publication. A properly installed and maintained system should be free of ground faults. The occurrence of one or more ground faults should be required to cause a "trouble" signal because it indicates a condition that could contribute to future malfunction of the system. Ground fault protection has been widely available on these systems for years and its cost is negligible. Requiring it on all systems will promote better installations, maintenance and reliability.

5. ☒ **This Proposal is Original Material.** Note: Original material is considered to be the submitter's own idea based on or as a result of his/her own experience, thought, or research and, to the best of his/her knowledge, is not copied from another source.

   ☐ **This Proposal is Not Original Material; Its Source** ***(if known)*** **is as Follows:** _____

I hereby grant the NFPA all and full rights in copyright to this proposal, and I understand that I acquire no rights in any publication of NFPA in which this proposal in this or another similar or analogous form is used.

Signature ***(Required)*** John B. Smith

PLEASE USE SEPARATE FORM FOR EACH PROPOSAL • NFPA FAX (617) 770-3500

Mail to: Secretary, Standards Council • NFPA • 1 Batterymarch Park • PO Box 9101 • Quincy, MA 02269-9101

--`,,```,,,,````-`-`,,`,,`,`,,`---

Copyright National Fire Protection Association
Provided by IHS under license with NFPA
No reproduction or networking permitted without license from IHS

Not for Resale

NFPA Technical Committee Document Proposal Form

Note: All proposals must be received by 5:00 p.m. EST/EDST on the published proposal closing date.

For further information on the standards-making process, please contact Codes and Standards Administration at 617-984-7249. For technical assistance, please call NFPA at 617-770-3000.

FOR OFFICE USE ONLY
Log #: _____
Date Rec'd: _____

Please indicate in which format you wish to receive your ROP/ROC: ☐ **CD ROM** ☐ **paper** ☐ **download**
(Note: In choosing the download option you intend to view the ROP/ROC from our Website. No copy will be sent to you.)

Date _____ **Name** _____ **Telephone** _____
Company _____
Address _____ **City** _____ **State** _____ **Zip** _____
Please indicate organization represented (if any) _____

1. a) **NFPA Document Title** _____
   b) **NFPA No. & Edition** _____ c) **Section/Paragraph** _____

2. **Proposal Recommends:** *(check one)* ☐ **new text** ☐ **revised text** ☐ **deleted text**

3. **Proposal.** *(Include proposed new or revised wording, or identification of wording to be deleted.)* Note: Proposed text should be in legislative format, that is, use underscore to denote wording to be inserted (inserted wording) and strike-through to denote wording to be deleted (~~deleted wording~~). _____

4. **Statement of Problem and Substantiation for Proposal.** Note: State the problem that will be resolved by your recommendation. Give the specific reason for your proposal including copies of tests, research papers, fire experience, etc. If more than 200 words, it may be abstracted for publication. _____

5. ☐ **This Proposal is Original Material.** Note: Original material is considered to be the submitter's own idea based on or as a result of his/her own experience, thought, or research and, to the best of his/her knowledge, is not copied from another source.

   ☐ **This Proposal is Not Original Material; Its Source *(if known)* is as Follows:** _____

I hereby grant the NFPA all and full rights in copyright to this proposal, and I understand that I acquire no rights in any publication of NFPA in which this proposal in this or another similar or analogous form is used.

Signature *(Required)* _____

PLEASE USE SEPARATE FORM FOR EACH PROPOSAL • NFPA FAX (617) 770-3500

Mail to: Secretary, Standards Council • NFPA • 1 Batterymarch Park • PO Box 9101 • Quincy, MA 02269-9101

Copyright National Fire Protection Association
Provided by IHS under license with NFPA
No reproduction or networking permitted without license from IHS
Not for Resale