NFPA 253

Standard Method of Test for Critical Radiant Flux of Floor Covering Systems Using a Radiant Heat Energy Source

2006 Edition

NFPA, 1 Batterymarch Park, Quincy, MA 02169-7471
An International Codes and Standards Organization

Copyright National Fire Protection Association
Provided by IHS under license with NFPA
No reproduction or networking permitted without license from IHS
Not for Resale

IMPORTANT NOTICES AND DISCLAIMERS CONCERNING NFPA DOCUMENTS

NOTICE AND DISCLAIMER OF LIABILITY CONCERNING THE USE OF NFPA DOCUMENTS

NFPA codes, standards, recommended practices, and guides, of which the document contained herein is one, are developed through a consensus standards development process approved by the American National Standards Institute. This process brings together volunteers representing varied viewpoints and interests to achieve consensus on fire and other safety issues. While the NFPA administers the process and establishes rules to promote fairness in the development of consensus, it does not independently test, evaluate, or verify the accuracy of any information or the soundness of any judgments contained in its codes and standards.

The NFPA disclaims liability for any personal injury, property or other damages of any nature whatsoever, whether special, indirect, consequential or compensatory, directly or indirectly resulting from the publication, use of, or reliance on this document. The NFPA also makes no guaranty or warranty as to the accuracy or completeness of any information published herein.

In issuing and making this document available, the NFPA is not undertaking to render professional or other services for or on behalf of any person or entity. Nor is the NFPA undertaking to perform any duty owed by any person or entity to someone else. Anyone using this document should rely on his or her own independent judgment or, as appropriate, seek the advice of a competent professional in determining the exercise of reasonable care in any given circumstances.

The NFPA has no power, nor does it undertake, to police or enforce compliance with the contents of this document. Nor does the NFPA list, certify, test or inspect products, designs, or installations for compliance with this document. Any certification or other statement of compliance with the requirements of this document shall not be attributable to the NFPA and is solely the responsibility of the certifier or maker of the statement.

--`,,```,,-`-`,,`,,`,`,,`---

Copyright National Fire Protection Association
Provided by IHS under license with NFPA
No reproduction or networking permitted without license from IHS

Not for Resale

ADDITIONAL NOTICES AND DISCLAIMERS

Updating of NFPA Documents

Users of NFPA codes, standards, recommended practices, and guides should be aware that these documents may be superseded at any time by the issuance of new editions or may be amended from time to time through the issuance of Tentative Interim Amendments. An official NFPA document at any point in time consists of the current edition of the document together with any Tentative Interim Amendments and any Errata then in effect. In order to determine whether a given document is the current edition and whether it has been amended through the issuance of Tentative Interim Amendments or corrected through the issuance of Errata, consult appropriate NFPA publications such as the National Fire Codes® Subscription Service, visit the NFPA website at www.nfpa.org, or contact the NFPA at the address listed below.

Interpretations of NFPA Documents

A statement, written or oral, that is not processed in accordance with Section 6 of the Regulations Governing Committee Projects shall not be considered the official position of NFPA or any of its Committees and shall not be considered to be, nor be relied upon as, a Formal Interpretation.

Patents

The NFPA does not take any position with respect to the validity of any patent rights asserted in connection with any items which are mentioned in or are the subject of NFPA codes, standards, recommended practices, and guides, and the NFPA disclaims liability for the infringement of any patent resulting from the use of or reliance on these documents. Users of these documents are expressly advised that determination of the validity of any such patent rights, and the risk of infringement of such rights, is entirely their own responsibility.

NFPA adheres to applicable policies of the American National Standards Institute with respect to patents. For further information contact the NFPA at the address listed below.

Law and Regulations

Users of these documents should consult applicable federal, state, and local laws and regulations. NFPA does not, by the publication of its codes, standards, recommended practices, and guides, intend to urge action that is not in compliance with applicable laws, and these documents may not be construed as doing so.

Copyrights

This document is copyrighted by the NFPA. It is made available for a wide variety of both public and private uses. These include both use, by reference, in laws and regulations, and use in private self-regulation, standardization, and the promotion of safe practices and methods. By making this document available for use and adoption by public authorities and private users, the NFPA does not waive any rights in copyright to this document.

Use of NFPA documents for regulatory purposes should be accomplished through adoption by reference. The term "adoption by reference" means the citing of title, edition, and publishing information only. Any deletions, additions, and changes desired by the adopting authority should be noted separately in the adopting instrument. In order to assist NFPA in following the uses made of its documents, adopting authorities are requested to notify the NFPA (Attention: Secretary, Standards Council) in writing of such use. For technical assistance and questions concerning adoption of NFPA documents, contact NFPA at the address below.

For Further Information

All questions or other communications relating to NFPA codes, standards, recommended practices, and guides and all requests for information on NFPA procedures governing its codes and standards development process, including information on the procedures for requesting Formal Interpretations, for proposing Tentative Interim Amendments, and for proposing revisions to NFPA documents during regular revision cycles, should be sent to NFPA headquarters, addressed to the attention of the Secretary, Standards Council, NFPA, 1 Batterymarch Park, P.O. Box 9101, Quincy, MA 02269-9101.

For more information about NFPA, visit the NFPA website at www.nfpa.org.

Copyright National Fire Protection Association
Provided by IHS under license with NFPA
No reproduction or networking permitted without license from IHS
Not for Resale

Copyright © 2005, National Fire Protection Association, All Rights Reserved

NFPA 253

Standard Method of Test for

Critical Radiant Flux of Floor Covering Systems Using a Radiant Heat Energy Source

2006 Edition

This edition of NFPA 253, *Standard Method of Test for Critical Radiant Flux of Floor Covering Systems Using a Radiant Heat Energy Source*, was prepared by the Technical Committee on Fire Tests and acted on by NFPA at its June Association Technical Meeting held June 6–10, 2005, in Las Vegas, NV. It was issued by the Standards Council on July 29, 2005, with an effective date of August 18, 2005, and supersedes all previous editions.

This edition of NFPA 253 was approved as an American National Standard on August 18, 2005.

Origin and Development of NFPA 253

Experience suggests that during the early stages of a fire floor covering systems seldom act as a fire spread medium. However, in a few fires involving multiple-occupancy buildings, the floor covering materials in corridors were primarily responsible for fire spread over a considerable distance. Those situations caused grave concern and pointed to the need for a realistic test to evaluate the flame spread of floor covering systems.

The inception of the flooring radiant panel test was at the Armstrong Cork Company in 1966. In 1972, conceptualization of critical radiant flux (W/cm^2 at extinguishment) as a measure of flame spread hazard was underway at the National Bureau of Standards (NBS). It was determined in the course of NBS work on model corridor fire tests that the radiant energy levels incident on the floor covering had a considerable influence on whether or not flaming combustion would propagate. Accordingly, it was natural to apply the critical radiant flux concept, and, in 1973, the NBS prepared a draft of the flooring radiant panel test.

In 1975, the Technical Committee on Fire Tests began its evaluation of the proposed test methods, which culminated in the adoption of the test as an official NFPA standard in May 1978. The standard was revised in 1984 and 1990.

The 1995 edition included significant improvements based on work conducted by the National Institute of Standards and Technology (NIST) and the carpet industry. Those findings improved the overall application of the standard and provided measured improvement in test precision. Other changes included a new pilot burner and reduction of the variation in the airflow through the chamber, which reduced the variability of data. Revisions also were made to eliminate "permissive" language. The revisions created closer harmony with ASTM E 648, *Standard Test Method for Critical Radiant Flux of Floor-Covering Systems Using a Radiant Heat Energy Source*.

The 2000 edition was a reconfirmation of the 1995 edition.

The 2006 edition includes a complete editorial rewrite for compliance with the *Manual of Style for NFPA Technical Committee Documents*. Further organizational and editorial changes were made to clarify the requirements of the test method. Provisions regarding safety precautions were moved to the annexes, and additional details were provided on simulating a concrete floor during the test.

Copyright National Fire Protection Association
Provided by IHS under license with NFPA
No reproduction or networking permitted without license from IHS
Not for Resale

Technical Committee on Fire Tests

William E. Fitch, *Chair*
Omega Point Laboratories Inc., TX [RT]

Jesse J. Beitel, Hughes Associates, Inc., MD [SE]
April L. Berkol, Starwood Hotels & Resorts Worldwide, Inc., NY [U]
Rep. American Hotel & Lodging Association
Robert G. Bill, Jr., FM Global, MA [I]
John A. Blair, The Dupont Company, DE [M]
Rep. Society of the Plastics Industry Inc.
Gordon H. Damant, Inter-City Testing & Consulting Corp. of California, CA [SE]
Thomas W. Fritz, Armstrong World Industries, Inc., PA [M]
Pravinray D. Gandhi, Underwriters Laboratories Inc., IL [RT]
James R. Griffith, Southwest Research Institute, TX [RT]
Gordon E. Hartzell, Hartzell Consulting, Inc., TX [SE]
Marcelo M. Hirschler, GBH International, CA [SE]
Alfred J. Hogan, Reedy Creek Improvement District, FL [E]
Rep. International Fire Marshals Association
William E. Koffel, Koffel Associates, Inc., MD [SE]
James R. Lawson, National Institute of Standards & Technology, MD [RT]
Rodney A. McPhee, Canadian Wood Council, Canada [M]
Frederick W. Mowrer, University of Maryland, MD [SE]
David T. Sheppard, U.S. Department of Justice, MD [RT]
Rep. American Forest & Paper Association
Kuma Sumathipala, American Forest & Paper Association, DC [M]
T. Hugh Talley, Hugh Talley Company, TN [M]
Rep. Upholstered Furniture Action Council
Rick Thornberry, The Code Consortium, Inc., CA [SE]
Robert A. Wessel, Gypsum Association, DC [M]
Robert J. Wills, American Iron and Steel Institute, AL [M]
Peter J. Willse, GE Global Asset Protection Services, CT [I]

Alternates

Robert M. Berhinig, Underwriters Laboratories Inc., IL [RT]
(Alt. to P. D. Gandhi)
Delbert F. Boring, Jr., American Iron and Steel Institute, OH [M]
(Alt. to R. J. Wills)
Richard J. Davis, FM Global, MA [I]
(Alt. to R. G. Bill, Jr.)
Sam W. Francis, American Forest & Paper Association, PA [M]
(Alt. to K. Sumathipala)
Richard G. Gann, National Institute of Standards and Technology, MD [RT]
(Alt. to J. R. Lawson)
Paul A. Hough, Armstrong World Industries, Inc., PA [M]
(Alt. to T. W. Fritz)
James K. Lathrop, Koffel Associates, Inc., CT [SE]
(Alt. to W. E. Koffel)
James A. Milke, University of Maryland, MD [SE]
(Alt. to F. W. Mowrer)
Arthur J. Parker, Hughes Associates, Inc., MD [SE]
(Alt. to J. J. Beitel)
Ronald A. Schulz, GE Global Asset Protection Services, MI [I]
(Alt. to P. J. Willse)
Ineke Van Zeeland, Canadian Wood Council, Canada [M]
(Alt. to R. A. McPhee)
Joe Ziolkowski, American Furniture Manufacturers Association, NC [M]
(Alt. to T. H. Talley)

Nonvoting

Robert H. Barker, American Fiber Manufacturers Association, VA [M]
(Alt. to Nonvoting Principal)
Tod L. Jilg, Hoechst Celanese Corporation, NC [M]
Rep. American Fiber Manufacturers Association
Rohit Khanna, U.S. Consumer Product Safety Commission, MD [C]

Milosh T. Puchovsky, NFPA Staff Liaison

This list represents the membership at the time the Committee was balloted on the final text of this edition. Since that time, changes in the membership may have occurred. A key to classifications is found at the back of the document.

NOTE: Membership on a committee shall not in and of itself constitute an endorsement of the Association or any document developed by the committee on which the member serves.

Committee Scope: This Committee shall have primary responsibility for documents on fire testing procedures, for reviewing existing fire test standards and recommending appropriate action to NFPA, for recommending the application of and advising on the interpretation of acceptable test standards for fire problems of concern to NFPA technical committees and members, and for acting in a liaison capacity between NFPA and the committees of other organizations writing fire test standards. This Committee does not cover fire tests that are used to evaluate extinguishing agents, devices, or systems.

Copyright National Fire Protection Association
Provided by IHS under license with NFPA
No reproduction or networking permitted without license from IHS
Not for Resale

Contents

Chapter 1 Administration **253**– 4
1.1 Scope **253**– 4
1.2 Purpose **253**– 4
1.3 Application **253**– 4
1.4 Summary of Test Method **253**– 4

Chapter 2 Referenced Publications **253**– 4
2.1 General **253**– 4
2.2 NFPA Publications. (Reserved) **253**– 4
2.3 Other Publications **253**– 4
2.4 References for Extracts in Mandatory Sections. (Reserved) **253**– 4

Chapter 3 Definitions **253**– 5
3.1 General **253**– 5
3.2 NFPA Official Definitions **253**– 5
3.3 General Definitions **253**– 5

Chapter 4 Test Apparatus **253**– 6
4.1 Radiant Panel Test Apparatus **253**– 6
4.2 Test Chamber **253**– 6
4.3 Radiant Heat Energy Source **253**– 6
4.4 Specimen Holder **253**– 7
4.5 Pilot Burner **253**– 7
4.6 Thermocouples **253**– 7
4.7 Exhaust Hood **253**– 8
4.8 Dummy Specimen **253**– 8
4.9 Timer **253**– 9

Chapter 5 Test Specimens **253**– 9
5.1 Sampling Procedure **253**– 9
5.2 Specimen Size and Mounting **253**– 9
5.3 Specimen Conditioning **253**– 9

Chapter 6 Radiant Heat Energy Flux Profile Standardization **253**– 9
6.1 Procedure **253**– 9

Chapter 7 Test Procedure **253**–10
7.1 Pretest Heating **253**–10
7.2 Sample Mounting **253**–10
7.3 Ignition of Pilot Burner **253**–10
7.4 Flame Propagation of Specimen **253**–10
7.5 Completion of Test **253**–10
7.6 Data Collection and Recording **253**–10
7.7 Removal of Specimen **253**–10
7.8 Subsequent Testing **253**–10

Chapter 8 Calculations **253**–11
8.1 General **253**–11
8.2 Formulas **253**–11

Chapter 9 Report **253**–11
9.1 Required Information **253**–11

Annex A Explanatory Material **253**–11

Annex B Procedure for Calibration of Apparatus **253**–11

Annex C Mounting Methods **253**–12

Annex D Sample Data Logs **253**–12

Annex E Commentary on Critical Radiant Flux Test **253**–13

Annex F Precision and Bias **253**–15

Annex G Safety Precautions **253**–16

Annex H Informational References **253**–16

Index **253**–17

--`,,```,,,,````-`-`,,`,,`,`,,`---

Copyright National Fire Protection Association
Provided by IHS under license with NFPA
No reproduction or networking permitted without license from IHS
Not for Resale

NFPA 253

Standard Method of Test for

Critical Radiant Flux of Floor Covering Systems Using a Radiant Heat Energy Source

2006 Edition

IMPORTANT NOTE: This NFPA document is made available for use subject to important notices and legal disclaimers. These notices and disclaimers appear in all publications containing this document and may be found under the heading "Important Notices and Disclaimers Concerning NFPA Documents." They can also be obtained on request from NFPA or viewed at www.nfpa.org/disclaimers.

NOTICE: An asterisk (*) following the number or letter designating a paragraph indicates that explanatory material on the paragraph can be found in Annex A.

Information on referenced publications can be found in Chapter 2 and Annex H.

Chapter 1 Administration

1.1 Scope.

1.1.1 This fire test response standard describes a procedure for measuring critical radiant flux behavior of horizontally mounted floor covering systems exposed to a flaming ignition source in a graded, radiant heat energy environment within a test chamber.

1.1.2* This fire test response standard measures the critical radiant flux at flameout and provides a basis for estimating one aspect of fire exposure behavior for floor covering systems.

1.2 Purpose.

1.2.1* The standard was developed to simulate an important fire exposure component in fires that develop in corridors or exitways of buildings and is not intended for routine use in estimating flame spread behavior of floor covering in building areas other than corridors or exitways.

1.2.2 This fire test response standard is designed to provide a basis for estimating one aspect of the fire exposure behavior of a floor covering system installed in a building corridor.

1.2.3 The test environment simulates conditions that have been observed and defined in full-scale corridor experiments.

1.3 Application.

1.3.1 This standard is used to measure and describe the response of materials, products, or assemblies to heat and flame under controlled conditions and is not to be used to describe or appraise the fire hazard or fire risk of materials, products, or assemblies under actual fire conditions.

1.3.2 The results of the test are permitted to be used as elements of a fire hazard assessment or a fire risk assessment that takes into account all factors that are pertinent to an assessment of the fire hazard or fire risk of a particular end use.

1.3.3* This standard does not purport to address all safety problems associated with its use.

1.3.4 The user of this standard is responsible to establish appropriate safety and health practices and to determine the applicability of regulatory limitations prior to use.

1.3.5 The fundamental assumption inherent in the test is that critical radiant flux is one measure of the sensitivity to flame spread of floor covering systems located in a building corridor.

1.3.6 The test is suitable for regulatory statutes, specification acceptance, design purposes, or development and research.

1.3.7 The test is applicable to floor covering system specimens that follow or simulate accepted installation practice.

1.3.8 Tests on the individual elements of a floor system are not valid for evaluation of the flooring system.

1.4 Summary of Test Method. The basic elements of the test chamber include an air–gas–fueled radiant heat energy panel inclined at 30 degrees to and directed at a horizontally mounted floor covering system specimen.

1.4.1 The radiant panel generates a radiant energy flux distribution along the 100 cm length of the test specimen from a nominal maximum of 1.0 W/cm^2 to a minimum of 0.1 W/cm^2.

1.4.2 The test is initiated by open-flame ignition from a pilot burner.

1.4.3 The distance burned to flameout is converted to W/cm^2 from the flux profile graph shown in Figure 1.4.3 and is reported as critical radiant flux W/cm^2.

1.4.4 The specimen can be mounted over underlayment or over a simulated concrete structural floor, bonded to a simulated structural floor, or otherwise mounted in a typical and representative way.

Chapter 2 Referenced Publications

2.1 General. The documents or portions thereof listed in this chapter are referenced within this standard and shall be considered part of the requirements of this document.

2.2 NFPA Publications. (Reserved)

2.3 Other Publications.

2.3.1 ASTM Publications. American Society for Testing and Materials, 100 Barr Harbor Drive, West Conshohocken, PA 19428-2959.

ASTM Manual 7, *Manual on Quality Control of Materials*, 6th edition, 1990.

ASTM C 1186, *Standard Specification for Flat Non-Asbestos Fiber-Cement Sheets*, 2002.

ASTM E 136, *Standard Test Method for Behavior of Materials in a Vertical Tube Furnace at 750°C*, 2004.

ASTM E 171, *Standard Specification for Standard Atmospheres for Conditioning and Testing Flexible Barrier Materials*, 1998.

2.3.2 Other Publication. *Merriam-Webster's Collegiate Dictionary*, 11th edition, Merriam-Webster, Inc., Springfield, MA, 2003.

2.4 References for Extracts in Mandatory Sections. (Reserved)

Copyright National Fire Protection Association
Provided by IHS under license with NFPA
No reproduction or networking permitted without license from IHS
Not for Resale

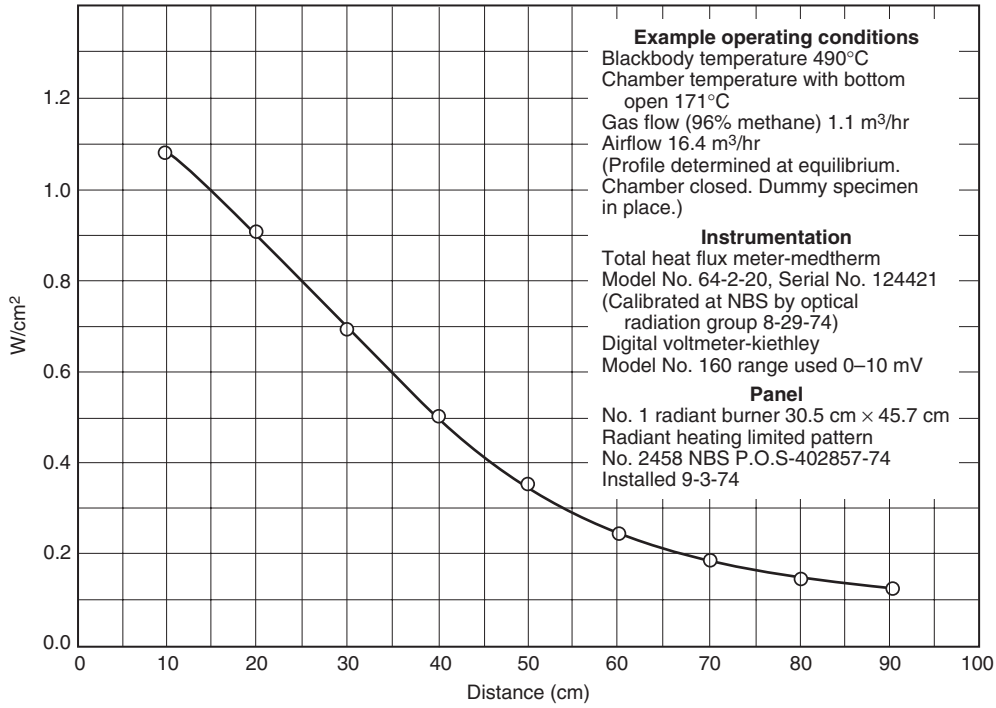

FIGURE 1.4.3 Standard Radiant Heat Energy Flux Profile.

Chapter 3 Definitions

3.1 General. The definitions contained in this chapter shall apply to the terms used in this standard. Where terms are not defined in this chapter or within another chapter, they shall be defined using their ordinarily accepted meanings within the context in which they are used. *Merriam-Webster's Collegiate Dictionary,* 11th edition, shall be the source for the ordinarily accepted meaning.

3.2 NFPA Official Definitions.

3.2.1* Approved. Acceptable to the authority having jurisdiction.

3.2.2 Shall. Indicates a mandatory requirement.

3.2.3 Should. Indicates a recommendation or that which is advised but not required.

3.2.4 Standard. A document, the main text of which contains only mandatory provisions using the word "shall" to indicate requirements and which is in a form generally suitable for mandatory reference by another standard or code or for adoption into law. Nonmandatory provisions shall be located in an appendix or annex, footnote, or fine-print note and are not to be considered a part of the requirements of a standard.

3.3 General Definitions.

3.3.1 Blackbody Temperature. The temperature of a perfect radiator having a surface with an emissivity of unity and, therefore, a reflectivity of zero (0).

3.3.2 Corridor. An enclosed space connecting a room or compartment with an exit that includes normal extensions, such as lobbies and other enlarged spaces.

3.3.3 Critical Radiant Flux. The level of incident radiant heat energy in units of W/cm^2 on a floor covering system at the most distant flameout point.

3.3.4* Flameout. The time period measured from the point in time identified as zero (0) at which the specimen is moved into the chamber and the door is closed to the point in time at which the last vestige of flame or glow disappears from the surface of the test specimen, frequently accompanied by a final puff of smoke.

3.3.5 Floor Covering. A separate or secondary surface applied over a flooring and including underlayment materials, carpeting, resilients, and coating systems.

3.3.6 Floor Covering System. A flooring or a combination of flooring and floor covering.

3.3.7 Flooring. A primary floor surface or a final floor surface.

3.3.8 Flux Profile. The curve of incident radiant heat energy on the specimen plane relative to the distance from the point of initiation of flaming ignition (i.e., 0 cm).

3.3.9 Standard Simulated Concrete Subfloor. Uncoated fiber-reinforced cement board with a nominal thickness of 6.3 mm and a density of 1442 kg/m^3 ±160 kg/m^3.

3.3.10 Total Flux Meter. The instrument used to measure the level of radiant heat energy incident on the specimen plane at any point.

Copyright National Fire Protection Association
Provided by IHS under license with NFPA
No reproduction or networking permitted without license from IHS
Not for Resale

Chapter 4 Test Apparatus

4.1 Radiant Panel Test Apparatus. The apparatus shall be as shown in Figure 4.1(a) and Figure 4.1(b).

4.2 Test Chamber. The flooring radiant panel test chamber employed for this test shall be located in a draft-protected laboratory.

4.2.1 The flooring radiant panel test chamber shall consist of an enclosure 140 cm long × 50 cm wide × 71 cm high above the test specimen as indicated in Figure 4.2.1(a) and Figure 4.2.1(b).

4.2.1.1 The sides, ends, and top shall be of 1.3 cm calcium silicate board with a nominal density insulating material of 0.74 g/cm^3 and shall have a thermal conductivity at 177°C of 0.128 W/(m·K).

4.2.1.2 One side shall be provided with a 10 cm × 110 cm, draft-tight, fire-resistant glass window so that the entire length of the test specimen can be observed from outside the fire test chamber.



FIGURE 4.1(a) Flooring Radiant Panel Test Apparatus.

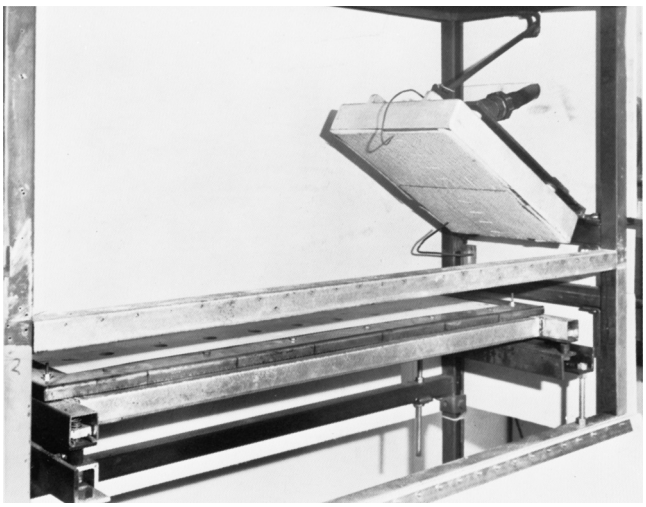

FIGURE 4.1(b) Flooring Radiant Panel Test Apparatus Showing Carpet Specimen and Gas-Fueled Panel.

4.2.1.3 On the side specified in 4.2.1.2 and below the observation window, a door shall be there that, when open, allows the specimen platform to be moved out for mounting or removal of test specimens.

4.2.1.4 Where necessary for observation, a draft-tight, fire-resistant observation window shall be installed at the low flux end of the chamber.

4.2.2 The bottom of the test chamber shall consist of a sliding steel platform that has provisions for rigidly securing the test specimen holder in a fixed and level position.

4.2.2.1 The test specimen holder shall be level when in place and shall be secured to the specimen mounting platform.

4.2.2.2 The free, or air access, area around the platform shall be 2580 cm^2 to 3225 cm^2.

4.2.3 The top of the chamber shall have an exhaust stack with interior dimensions of 10.2 cm ± 0.3 cm wide × 38.0 cm ± 0.3 cm deep × 31.8 cm ± 0.3 cm high at the opposite end of the chamber from the radiant panel.

4.3 Radiant Heat Energy Source.

4.3.1 The radiant heat energy source shall be a panel consisting of a porous refractory material mounted in a cast-iron frame or steel frame and having a radiation surface of 30.5 cm × 45.7 cm.

4.3.2 The radiant heat energy source shall be capable of operating at temperatures up to 816°C.

4.3.3 The panel fuel system shall consist of the following:

(1) Venturi-type aspirator for mixing gas and air at atmospheric pressure
(2) Clean, dry air supply capable of providing 28.3 m^3/hr at 76 mm of water column at normal temperature and pressure (NTP)
(3) Instrumentation for monitoring and controlling the flow of fuel to the panel

4.3.4 The radiant heat energy panel shall be fired by propane, methane, or natural gas.

4.3.5 The radiant heat energy panel shall be mounted at 30 degrees to the horizontal specimen plane.

4.3.5.1 The horizontal distance from the zero (0) mark on the specimen fixture to the bottom edge (projected) of the radiating surface of the panel shall be 8.9 cm.

4.3.5.2 The panel-to-specimen vertical distance shall be 14 cm *[see Figure 4.2.1(a) and Figure 4.2.1(b)].*

4.3.5.3 The angle and dimensions specified in 4.3.5 through 4.3.5.2 shall be followed to obtain the required radiant flux profile.

4.3.6 The radiation pyrometer for standardizing the thermal output of the panel shall be capable of viewing a circular area 254 mm in diameter at a distance of about 1.37 m.

4.3.7 The radiation pyrometer shall be calibrated over an operating blackbody temperature range of 490°C to 510°C. *(See Annex B.)*

4.3.8 A high impedance voltmeter or potentiometric voltmeter with a millivolt range shall be used to monitor the output of the radiation pyrometer described in 4.3.6.

--`,,```,,-`-`,,`,,`,`,,`---
Copyright National Fire Protection Association
Provided by IHS under license with NFPA
No reproduction or networking permitted without license from IHS
Not for Resale

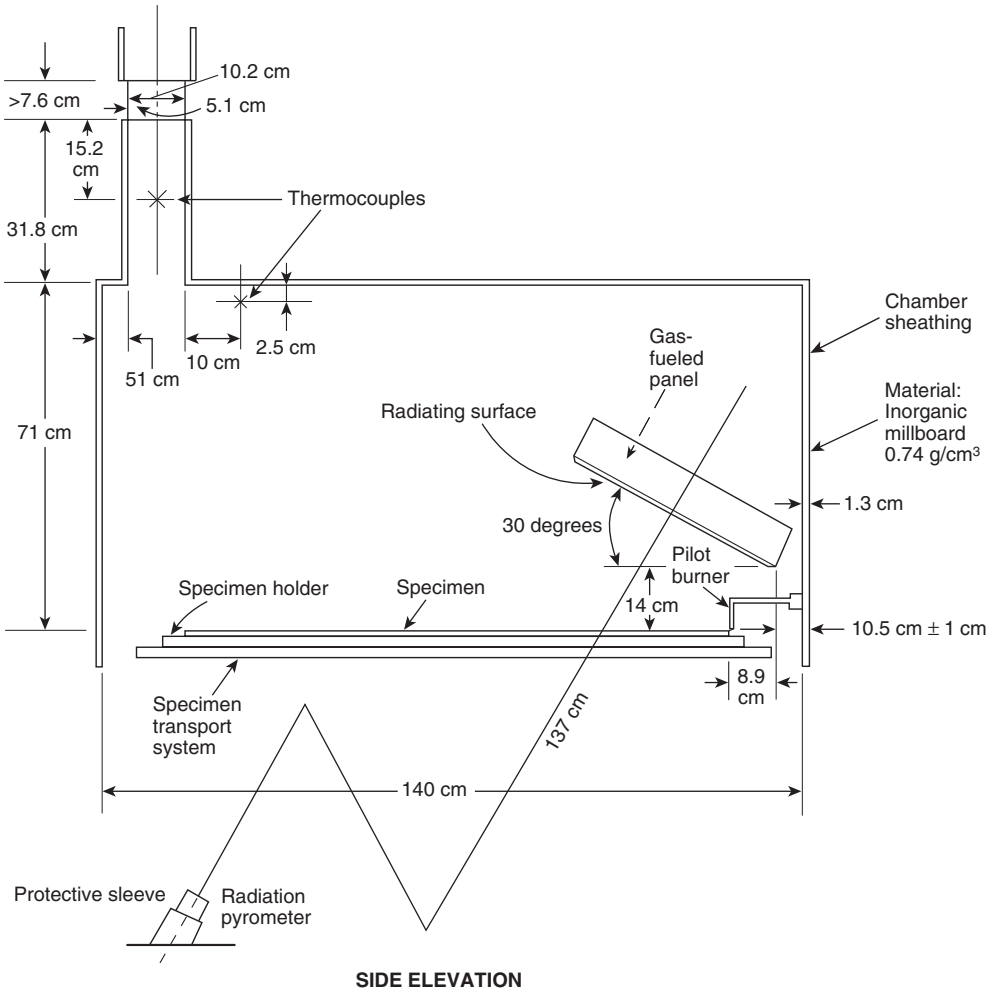

FIGURE 4.2.1(a) Side Elevation of Flooring Radiant Panel Tester Schematic.

4.4* Specimen Holder. The specimen holder shall be constructed from heat-resistant stainless steel having a thickness of 0.198 cm and an overall dimension of 114 cm × 31.1 cm, as illustrated in Figure 4.4, with a specimen opening of 20 cm × 100 cm.

4.4.1 Six slots shall be cut in the flange on either side of the holder to reduce warping.

4.4.2 The holder shall be fastened to the platform with two stud bolts at each end.

4.5 Pilot Burner. The pilot burner used to ignite the specimen shall be a nominal 6 mm inside diameter, 10 mm outside diameter stainless steel tube line burner having 19 evenly spaced 0.7 mm diameter (No. 70 drill) holes drilled radially along the centerline and 16 evenly spaced 0.7 mm diameter (No. 70 drill) holes drilled radially 60 degrees below the centerline as illustrated in Figure 4.5.

4.5.1 In operation, the gas flow shall be adjusted to a flow rate of 0.085 m^3/hr to 0.100 m^3/hr (air scale).

4.5.2 With the gas flow adjusted in accordance with 4.5.1 and the pilot burner in the test position, the pilot flame shall extend nominally from 63.5 mm ± 10 mm at either end to nominally 127 mm ± 10 mm at the center.

4.5.3 The pilot burner shall be positioned no more than 5 degrees from the horizontal so that the flame generated impinges on the specimen at the zero (0) distance burned point *[see Figure 4.2.1(a) and Figure 4.2.1(b)]*.

4.5.4 When not being applied to the specimen, the burner shall be capable of being moved at least 50 mm away from the specimen.

4.5.5 The holes in the pilot burner shall be kept clean.

4.5.6 A soft wire brush shall be used to remove surface contaminants.

4.5.7 Nickel-chromium or stainless steel wire or its equivalent with an outside diameter of 0.5 mm shall be used for opening the holes.

4.6 Thermocouples.

4.6.1 A 3.2 mm stainless steel–sheathed, grounded junction, Chromel-Alumel thermocouple shall be located in the flooring radiant panel test chamber. *[See Figure 4.2.1(a) and Figure 4.2.1(b).]*

4.6.1.1 The thermocouple shall be kept clean to ensure the accuracy of the readout.

Copyright National Fire Protection Association
Provided by IHS under license with NFPA
No reproduction or networking permitted without license from IHS
Not for Resale

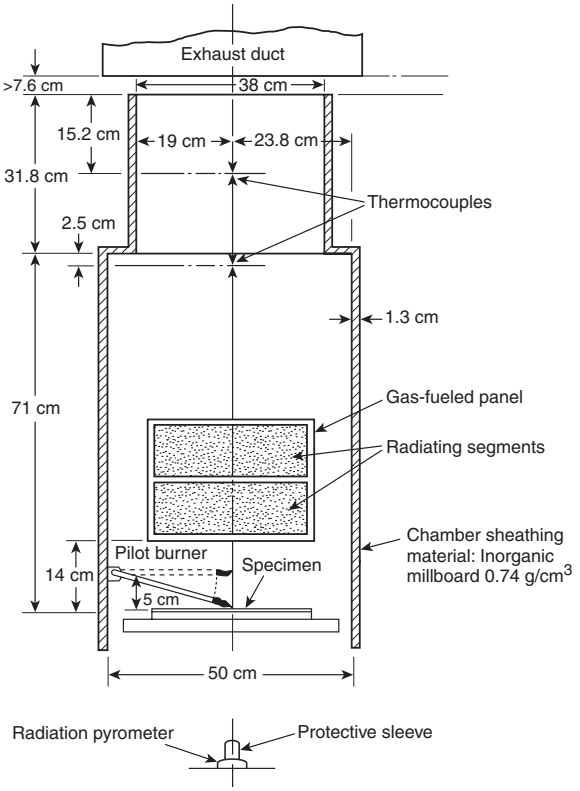

FIGURE 4.2.1(b) Low Flux Elevation of Flooring Radiant Panel Tester Schematic.

4.6.1.2 The chamber thermocouple shall be located in the longitudinal central vertical plane of the chamber 25 mm down from the top and 102 mm back from the inside of the exhaust stack.

4.6.2 An indicating potentiometer with a range of 100°C to 500°C shall be used to determine the chamber temperature prior to the test.

4.7* Exhaust Hood.

4.7.1 An exhaust duct meeting the following criteria shall be used to remove combustion products from the chamber:

(1) It shall have a capacity of 28.3 NTP m^3/min to 85 NTP m^3/ min, decoupled from the chamber stack by at least 76 mm on all sides.
(2) It shall have an effective canopy area larger than the plane area of the chamber with the specimen platform in the out position.

4.7.2 With the panel turned on and the dummy specimen in place, the airflow rate through the stack shall be 76.2 m/min ± 15.2 m/min when measured with a hot wire anemometer 30 seconds after insertion of the probe into the center of the stack opening at a distance of 152 mm down from the top of the stack opening.

4.8 Dummy Specimen.

4.8.1 The dummy specimen, which is used in the flux profile determination, shall be made of 19 mm inorganic calcium silicate board with a nominal density of 0.74 g/cm^3 *(see Figure 4.4).*

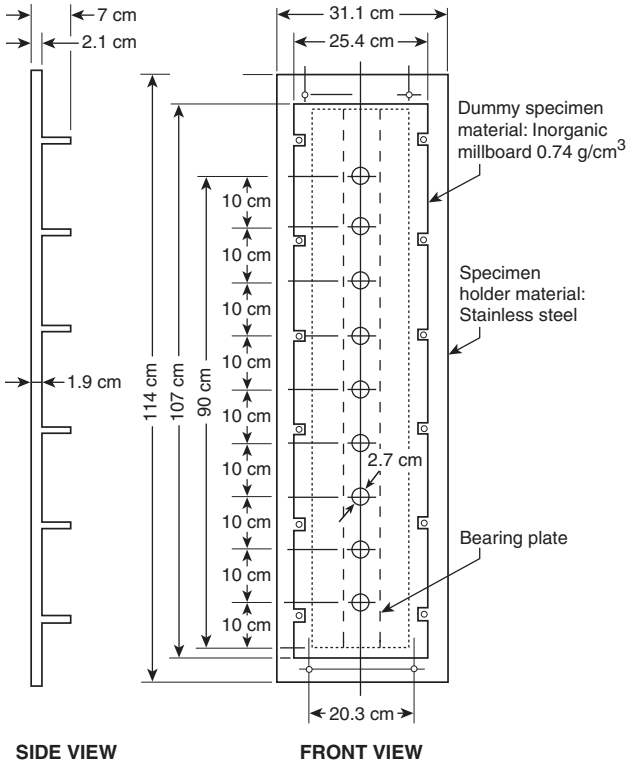

FIGURE 4.4 Dummy Specimen in Specimen Holder.

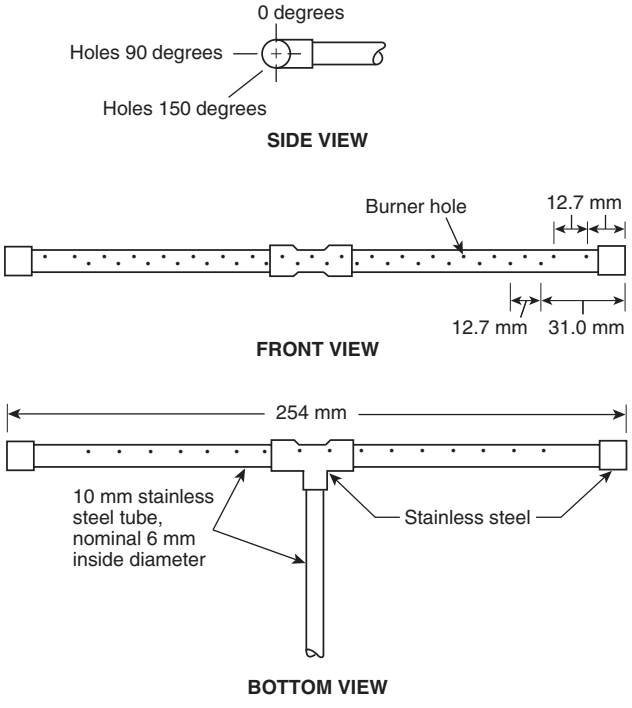

Notes:
1. All holes No. 70; drill 0.7 mm diameter.
2. All joints silver soldered, heliarced, or otherwise appropriately sealed.

FIGURE 4.5 Pilot Burner.

Copyright National Fire Protection Association
Provided by IHS under license with NFPA
No reproduction or networking permitted without license from IHS
Not for Resale

4.8.2 The specimen shall measure 250 mm × 1070 mm with 27 mm diameter holes located on the centerline at points ranging from 100 mm to 900 mm, spaced in 100 mm increments, starting at the maximum flux end of the specimen.

4.8.3 To provide proper and consistent seating of the flux meter in the hole openings, a stainless steel or galvanized steel bearing plate shall be mounted and secured firmly to the underside of the calcium silicate board with holes corresponding to those specified in 4.8.1.

4.8.3.1 The bearing plate shall run the length of the dummy specimen and shall have a minimum width of 76 mm.

4.8.3.2 The thickness of the bearing plate shall vary to maintain the flux meter height specified in 6.1.7.1 up to the maximum of 3.2 mm.

4.8.3.3* The total heat flux transducer used to determine the flux profile of the chamber in conjunction with the dummy specimen *(see 4.3.8)* shall have a range of 0 W/cm^2 to 1.5 W/ cm^2 and shall be calibrated over the operating flux level range of 0.10 W/cm^2 to 1.5 W/cm^2. *(See Annex B.)*

4.8.3.4 A source of cooling water 15°C to 25°C shall be provided for the total heat flux transducer.

4.8.3.5 A high impedance voltmeter or potentiometric voltmeter with a range of 0 mV to 10 mV and reading to 0.01 mV shall be used to measure the output of the total heat flux transducer during the flux profile determination.

4.9 Timer. A timer reading to the nearest 0.1 minute shall be used to measure preheating, pilot contact, and flameout times.

Chapter 5 Test Specimens

5.1 Sampling Procedure. The sample selected for testing shall be representative of the product.

5.2 Specimen Size and Mounting.

5.2.1 The test specimen shall be a floor covering system sized to provide for adequate clamping in the mounting frame.

5.2.1.1 The specimen's minimum dimensions shall exceed the frame width (200 mm nominal) and length (1000 mm nominal) by about 50 mm.

5.2.1.2 Holes shall be made in the specimen to accommodate the mounting frame bolts. *(See Figure 4.4.)*

5.2.2* The floor covering system specimen shall simulate actual installation practice.

5.2.3 Where a standard simulated concrete floor is used, the reinforced cement board shall meet the requirements of ASTM C 1186, *Standard Specification for Flat Non-Asbestos Fiber-Cement Sheets*, and ASTM E 136, *Standard Test Method for Behavior of Materials in a Vertical Tube Furnace at 750°C.*

5.2.4 A minimum of three specimens per sample shall be tested.

5.3 Specimen Conditioning. Test specimens shall be conditioned at 21°C ± 3°C and a relative humidity of 50 percent ± 5 percent horizontally or vertically in open racks for optimum air circulation for a minimum of 48 hours.

5.3.1 Carpet specimens that have been glued down shall be conditioned for a minimum of 96 hours.

5.3.2 Conditioning shall be conducted in accordance with ASTM E 171, *Standard Specification for Standard Atmospheres for Conditioning and Testing Flexible Barrier Materials.*

Chapter 6 Radiant Heat Energy Flux Profile Standardization

6.1 Procedure.

6.1.1 In a continuing program of tests, the flux profile shall be determined at least weekly.

6.1.2 Where the time interval between tests is greater than 1 week, the flux profile shall be determined at the start of the test series.

6.1.3 The dummy specimen shall be mounted in the mounting frame, and the assembly shall be attached to the sliding platform.

6.1.4 With the sliding platform outside the chamber, the radiant panel shall be ignited.

6.1.4.1 The unit shall heat for 1½ hours.

6.1.4.2 The pilot burner shall be off during the flux profile determination.

6.1.4.3 The fuel mixture shall be adjusted to provide an air-rich flame.

6.1.4.4 Fuel flow shall be set to bring the panel blackbody temperature to 500°C ± 10°C, and the chamber temperature shall be recorded.

6.1.5 When equilibrium has been established, the specimen platform shall be moved into the chamber and the door shall be closed.

6.1.6 The closed chamber shall be allowed to equilibrate for 30 minutes.

6.1.7 The radiant heat energy flux level shall be measured at the 400 mm point with the total flux meter instrumentation.

6.1.7.1 The measurement specified in 6.1.7 shall be accomplished by inserting the flux meter into the opening so that its detecting plane is 1.6 mm to 3.2 mm above and parallel to the plane of the dummy specimen and then reading its output after 30 seconds ± 10 seconds.

6.1.7.2 If the level is within the limits specified in 6.1.7, the flux profile determination shall be started.

6.1.7.3 If the level is not within the limits specified in 6.1.7, the necessary adjustments in panel fuel flow shall be made.

6.1.7.4 Data shall be recorded in a data log. *(See Annex D.)*

6.1.8 The test shall be run under chamber operating conditions that provide a flux profile as shown in Figure 1.4.3, and the radiant heat energy incident on the dummy specimen shall be as follows:

(1) Between 0.87 W/cm^2 and 0.95 W/cm^2 at the 200 mm point
(2) Between 0.48 W/cm^2 and 0.52 W/cm^2 at the 400 mm point
(3) Between 0.22 W/cm^2 and 0.26 W/cm^2 at the 600 mm point

6.1.9 The flux meter shall be inserted into the 100 mm opening following the procedure outlined in 6.1.7.

Copyright National Fire Protection Association
Provided by IHS under license with NFPA
No reproduction or networking permitted without license from IHS
Not for Resale

6.1.9.1 The millivolt (mV) output shall be read at 30 seconds ± 10 seconds.

6.1.9.2 The procedure outlined in 6.1.9 shall be repeated at the 200 mm point.

6.1.9.3 The 300 mm to 900 mm flux levels shall be determined in the manner specified in 6.1.9.

6.1.9.4 Following the 900 mm measurement, a reading check shall be made at 400 mm to verify that the test chamber is in calibration when it is within the limits set forth in 6.1.8 and the profile determination is completed.

6.1.9.5 If the calibration requirement of 6.1.9.4 cannot be achieved, the fuel flow shall be adjusted, allowing 30 minutes for equilibrium, and the procedure shall be repeated.

6.1.10 The radiant heat energy flux data shall be plotted as a function of distance along the specimen plane.

6.1.10.1 A smooth curve shall be developed by drawing through the data points.

6.1.10.2 The curve developed in 6.1.10.1 shall be designated the flux profile curve.

6.1.11 The open chamber temperature and the radiant panel blackbody temperature identified with the standard flux profile shall be determined by opening the door and moving the specimen platform outside the chamber.

6.1.11.1 The chamber shall be allowed to equilibrate for 30 minutes.

6.1.11.2 The chamber temperature and the optical pyrometer output that indicate the panel blackbody temperature shall be read and recorded in degrees Celsius.

6.1.11.3 The recorded temperature settings specified in 6.1.11.2 shall be used in subsequent test work instead of measurements of the dummy specimen radiant flux at 200 mm, 400 mm, and 600 mm.

Chapter 7 Test Procedure

7.1 Pretest Heating. With the sliding platform outside the chamber, the radiant panel shall be ignited.

7.1.1 The unit shall be allowed to heat for 1½ hours.

7.1.2 A sheet of inorganic millboard, such as calcium silicate or the equivalent, shall be used to cover the opening when the hinged portion of the front panel is open and the specimen platform is moved out of the chamber.

7.1.3 The millboard specified in 7.1.2 shall be used to prevent heating of the specimen and to protect the operator.

7.1.4 The panel blackbody temperature and the chamber temperature shall be read.

7.1.5 If the temperature readings specified in 7.1.4 are within ±5°C of those determined in accordance with 6.1.11, the chamber shall be considered ready for use.

7.2 Sample Mounting. The sample holder shall be inverted on a workbench, and the flooring system shall be inserted.

7.2.1 The steel bar clamps shall be placed across the back of the assembly, and the nuts shall be tightened firmly.

7.2.2 The sample holder shall be returned to its upright position, the test surface shall be cleaned with a vacuum, and the sample holder shall be mounted on the specimen platform.

7.2.3 Carpet specimens shall be brushed to raise the pile to its normal position.

7.3 Ignition of Pilot Burner. The following steps shall be taken:

(1) The pilot burner shall be ignited and kept at least 50 mm away from the specimen.
(2) The specimen shall be moved into the chamber.
(3) The door shall be closed.

7.3.1 The timer shall be started.

7.3.2 After 5 minutes, the chamber shall be considered to be preheated.

7.3.3 With the pilot burner on and at least 50 mm away from the specimen, the pilot burner flame shall be brought into contact with the specimen at the zero (0) mm mark.

7.3.4 The pilot burner flame shall remain in contact with the specimen for 5 minutes.

7.3.5 The pilot burner then shall be removed to a position at least 50 mm away from the specimen, and the pilot burner flame shall be extinguished.

7.4 Flame Propagation of Specimen. If the specimen does not propagate flame within 5 minutes following pilot burner flame application, the test shall be terminated.

7.4.1 For specimens that do propagate flame, the test shall be continued until the flame goes out.

7.4.2 Significant phenomena such as melting, blistering, and penetration of flame to the substrate shall be observed and recorded.

7.5 Completion of Test.

7.5.1 When the test is completed, the door shall be opened and the specimen platform shall be pulled out.

7.5.2 The protective inorganic millboard sheet shall be put in place.

7.6 Data Collection and Recording. The distance burned shall be measured (i.e., the point of farthest advance of the flame front to the nearest 1 mm).

7.6.1 The distance to W/cm^2 critical radiant heat flux at flameout shall be converted from the flux profile curve.

7.6.2 Data shall be recorded in a data log. *(See Annex D.)*

7.7 Removal of Specimen. The specimen and its mounting frame shall be removed from the movable platform.

7.8 Subsequent Testing.

7.8.1 The subsequent test shall be started as soon as the panel blackbody temperature and the chamber temperature are verified *(see 6.1.11).*

7.8.2 The test assembly shall be at room temperature prior to startup.

Copyright National Fire Protection Association
Provided by IHS under license with NFPA
No reproduction or networking permitted without license from IHS
Not for Resale

Chapter 8 Calculations

8.1 General. The mean, the standard deviation, and the coefficient of variation of the critical radiant flux test data on the three specimens shall be calculated in accordance with ASTM Manual 7, *Manual on Quality Control of Materials*.

8.2 Formulas. The following formulas shall be used:

$$S = \sqrt{\frac{\left(\sum X^2 - n\bar{X}^2\right)}{n-1}} \text{ and } V = \frac{S}{X} \times 100$$

where:

S = estimated standard deviation
X = value of single observation
n = number of observations
$\bar{X}$ = arithmetic mean of the set of observations
V = coefficient of variation

Chapter 9 Report

9.1 Required Information. The report shall include the following:

(1) Description of the floor covering system tested, including its elements
(2) Description of the procedure used to assemble the floor covering system specimen
(3) Number of specimens tested
(4) Individual values of critical radiant flux
(5) Average critical radiant flux, standard deviation, and coefficient of variation
(6) Observations of the burning characteristics of the specimen during the testing exposure, such as delamination, melting, sagging, and shrinking

Annex A Explanatory Material

Annex A is not a part of the requirements of this NFPA document but is included for informational purposes only. This annex contains explanatory material, numbered to correspond with the applicable text paragraphs.

A.1.1.2 The imposed radiant flux simulates the thermal radiation levels likely to impinge on the floors of a building whose upper surfaces are heated by flames, hot gases, or both from a fully developed fire in an adjacent room or compartment.

A.1.2.1 Annex F provides information on the proper application and interpretation of the results of this test.

A.1.3.3 Specific safety precautions are provided in Annex G.

A.3.2.1 Approved. The National Fire Protection Association does not approve, inspect, or certify any installations, procedures, equipment, or materials; nor does it approve or evaluate testing laboratories. In determining the acceptability of installations, procedures, equipment, or materials, the authority having jurisdiction may base acceptance on compliance with NFPA or other appropriate standards. In the absence of such standards, said authority may require evidence of proper installation, procedure, or use. The authority having jurisdiction may also refer to the listings or labeling practices of an organization that is concerned with product evaluations and is thus in a position to determine compliance with appropriate standards for the current production of listed items.

A.3.3.4 Flameout. See Section 7.3.

A.4.4 An acceptable heat-resistant stainless steel is AISI Type 300 (UNA-NO8 330) or equivalent. This reference is provided for informational purposes only and has not been independently verified, certified, or endorsed by NFPA or any of its technical committees.

A.4.7 An acceptable anemometer is an Omega HH-615 HT hot-wired anemometer manufactured by Omega Engineering Inc., Stamford, CT. This reference is provided for informational purposes only and has not been independently verified, certified, or endorsed by NFPA or any of its technical committees.

A.4.8.3.3 An acceptable heat flux transducer is a Schmidt-Boelter–type Medtherm 64-2-20 manufactured by Medtherm Corporation, Huntsville, AL. This reference is provided for informational purposes only and has not been independently verified, certified, or endorsed by NFPA or any of its technical committees.

A.5.2.2 Typical examples of floor covering systems are as follows:

(1) Hardwood floor nailed to a plywood subfloor that is sanded and finished according to standard practice
(2) Carpet with or without integral cushion pad bonded to a high-density inorganic sheet simulating a concrete subfloor
(3) Carpet mounted over a standard cushion or the standard simulated concrete subfloor [Federal Specification DDD-C-001023 (GSA-FSS), *Type II — Rubber Coated Jute and Animal Hair or Fiber*, Amendment 1 (minimum 9.53 mm thick, 1.47 kg/0.836 m^2)]
(4) Carpet mounted over the actual cushion pad or carpet mounted over the actual subfloor to be used in the installation
(5) Resilient floor bonded to a high-density inorganic sheet simulating a concrete subfloor

Annex B Procedure for Calibration of Apparatus

This annex is not a part of the requirements of this NFPA document but is included for informational purposes only.

B.1 Radiation Pyrometer.

B.1.1 The radiation pyrometer should be calibrated by means of a conventional blackbody enclosure placed within a furnace and maintained at uniform temperatures of 490°C, 500°C, and 510°C. The blackbody enclosure can consist of a closed Chromel metal cylinder with a small sight hole in one end.

B.1.1.1 The radiation pyrometer is sited on the opposite end of the cylinder, where a thermocouple indicates the blackbody temperature. The thermocouple is placed in a drilled hole and in good thermal contact with the blackbody.

B.1.1.2 When the blackbody enclosure has reached the appropriate temperature equilibrium, the output of the radiation pyrometer should be read. This procedure is repeated for each temperature.

B.1.2 As an alternative to the procedure described in B.1.1, a laboratory can be permitted to utilize the services of an outside agency to provide calibration traceable to the National Institute of Standards and Technology (NIST).

--`,,```,,-`-`,,`,,`,`,,`---
Copyright National Fire Protection Association
Provided by IHS under license with NFPA
No reproduction or networking permitted without license from IHS
Not for Resale

B.2 Total Heat Flux Meter.

B.2.1 The total heat flux meter should be developed by transfer calibration methods with a NIST-calibrated flux meter. This calibration should make use of the flooring radiant panel tester as the heat source. Measurements should be made at each of the nine dummy specimen positions, and the mean value of the results should be used to constitute the final calibration.

B.2.2 Each laboratory should maintain a dedicated, calibrated reference flux meter against which one or more working flux meters can be compared as needed. The working flux meters should be calibrated at least annually.

Annex C Mounting Methods

This annex is not a part of the requirements of this NFPA document but is included for informational purposes only.

C.1 Introduction. This annex has been compiled as an aid in the selection of a method for mounting various flooring materials in the fire test chamber. These mountings are recommended for test method uniformity and convenience.

C.2 Mounting Procedures.

C.2.1 Simulated Carpet and Cushion Pad over Concrete. Carpet specimens should be cut in the machine direction. The specimen holder should be inverted on a clean, flat surface, and the test specimen then inserted into the holder.

C.2.1.1 The cushion pad then is inserted with the pattern side facing the carpet, followed by nominal 6.3 mm thick, fiber-reinforced, high-density (762 kg/m^3 ± 80 kg/m^3) cement board and a 13 mm inorganic millboard with a density of 0.74 g/cm^3. It should be noted that fiber-reinforced cement board could spall during a test, which can be avoided by heating the board for 12 hours at 163°C.

C.2.1.2 Finally, the steel bar clamps should be placed across the assembly and tightened firmly. The test assembly should be mounted on the specimen transport frame so that the pile lay faces the panel.

C.2.2 Simulated Carpet with or Without Integral Cushion Pad Bonded to Concrete. Carpet specimens should be cut in the machine direction. The adhesive used should be that recommended by the carpet manufacturer. In the absence of a manufacturer's recommendation, a multipurpose adhesive typical of commercial installation should be selected by the laboratory.

C.2.2.1 The adhesive needs to be applied to the smooth side of the fiber-reinforced cement board in accordance with the directions provided by the adhesive manufacturer. In the absence of a manufacturer's recommendation, the adhesive should be applied with a 3.2 mm V-notched trowel. A nominal 9.1 kg roller with a diameter of 76 mm and a width approximately that of the specimen should be used to apply the adhesive across the top of the specimen to ensure good contact with the substrate.

C.2.2.2 Specimens can be permitted to be stacked under a dead load after bonding specimens to the fiber-reinforced cement board for no more than 24 hours prior to conditioning *(see Section 5.3 for conditioning requirements)*. The specimen should be mounted in the testing frame as described in C.2.1 and should be tested in accordance with standard procedure.

C.2.3 Other Carpet. The actual subfloor can be permitted to be substituted for the standard fiber-reinforced cement board substrate.

C.3 Resilient Flooring. Commercial installation practice should be followed or simulated or both. In most instances, this type of installation practice necessitates bonding to the standard fiber-reinforced cement substrate.

C.4 Hardwood Flooring. Commercial installation practice should be followed or simulated or both. In a typical system, the substrate is a 16 mm plywood sheet covered with building paper. The oak flooring strips are nailed to the plywood and then sanded, sealed, and waxed. The assembly should be tested with the moisture content of the oak at 7 percent to 8 percent.

Annex D Sample Data Logs

This annex is not a part of the requirements of this NFPA document but is included for informational purposes only.

D.1 Data Logs. Sample data logs for a radiant flux profile and a flooring radiant panel test are provided in Figure D.1(a) and Figure D.1(b).

RADIANT FLUX PROFILE DATA LOG

Date _____

Blackbody temperature _____ mV _____ °C

Gas flow _____ NTP m^3/hr

Airflow _____ NTP m^3/hr

Room temperature _____ °C

Pressure: Air _____ cm of H_2O; gas _____ cm of H_2O

Flux meter No. _____

Conversion factor from calibration on _____

Distance (cm)	mV	W/cm²
10		
20		
30		
40		
60		
70		
80		
90		

Signed _____

© 2005 National Fire Protection Association

FIGURE D.1(a) Sample Data Log for Radiant Flux Profile.

Copyright National Fire Protection Association
Provided by IHS under license with NFPA
No reproduction or networking permitted without license from IHS
Not for Resale

FLOORING RADIANT PANEL TEST DATA LOG

Test No. _____ Date _____ Time _____

Laboratory _____

Specimen identification/code No. _____

Test Assembly

Panel: Angle _____ degrees; temperature _____ °C

Flow: Gas _____ NTP m^3/hr; air _____ NTP m^3/hr

Pressure, Initial

Air _____ cm of H_2O; gas _____ cm of H_2O

Chamber Temperature

Initial _____ °C; maximum _____ °C

Room temperature _____ °C

Hood draft _____ cm of H_2O

Flame Front Advance

Distance (cm)	Time (minutes)				

Total burn length _____ cm

Critical radiant flux _____ W/cm^2

Flame front out _____ minutes; flux profile reference _____

All flame out _____ minutes

Observations _____

Signed _____

© 2005 National Fire Protection Association

FIGURE D.1(b) Sample Data Log for Flooring Radiant Panel Test.

Annex E Commentary on Critical Radiant Flux Test

This annex is not a part of the requirements of this NFPA document but is included for informational purposes only.

E.1 Introduction.

E.1.1 The development and behavior of fires in buildings and rooms or compartments are complex phenomena and are not well understood. As a result, efforts to establish safety requirements must, for the present, be based on the selection and use of those components of the fire system that could become involved and that can be regulated. These efforts, together with experienced engineering rationale, must serve until a more valid technical basis for fire engineering design has been determined.

E.1.2 When fire develops in a building, experience suggests that traditional floor covering systems seldom serve as a medium for fire spread during the early stages of a fire. During several fires in the early 1970s, floor covering materials in corridors became involved for considerable distances. The test method described in this standard has been recommended as a means to control potential fire spread in floor covering systems.

E.1.3 Because the quantity and nature of room furnishing items cannot, at present, be controlled with regard to fire involvement of the full room, it is necessary to assume that floor involvement can and will, on occasion, occur. It is appropriate to recommend the application of only those floor covering systems that meet high levels of resistance to fire involvement based on critical radiant flux for use in corridors. Building codes cover interior finish in general, and it appears that only in corridors do the requirements for floor covering systems need to be more restrictive.

E.1.4 This annex is intended to provide information on the technical relevance of the test method to the problem of fires. It is intended to provide both the technical audience and the lay public with a basis for interpreting the significance and limitations of the data resulting from the test.

E.2 Nature of the Test.

E.2.1 Convective heat flow cannot serve as a major feedback mechanism in most cases of fires that involve floor covering systems, because of the buoyancy of the flames and hot gases. Therefore, the horizontal surfaces of building finishes seldom have been recognized as primary hazards in the spread of flames. However, corridor fire tests conducted at the National Institute of Standards and Technology (NIST), together with building fire incidents, indicate that fire spread can occur in corridors exposed to burnout conditions in adjacent rooms. [1, 2]

E.2.1.1 Fires were observed to propagate the full length of the corridor where little, if any, combustible material other than the floor covering system was involved in the corridor finish. Analysis of the measurements made during such tests has made clear the importance of radiant heat transfer from upper corridor surfaces, flame, smoke, and gases in serving a fire support role. Therefore, the sensitivity of a floor covering system to the radiant support of combustion is recommended as a basis for ranking floor covering systems with respect to fire behavior. [3, 4]

E.2.1.2 Critical radiant flux, the heat flux level below which surface flame spread will not occur, was selected as the fire

Copyright National Fire Protection Association
Provided by IHS under license with NFPA
No reproduction or networking permitted without license from IHS
Not for Resale

property of controlling importance for a floor covering system. If a room fire does not impose a radiant flux that exceeds this critical level on a corridor floor covering system, flame spread will not occur.

E.2.2 Critical radiant flux does not provide information on the irradiance level to which the flooring is exposed when fire occurs. Irradiance level is influenced largely by other variables, which include the following:

(1) Nature, quantity, and arrangement of the fire load in the compartment where ignition occurs
(2) Ventilation conditions in the portion of the building that becomes exposed to fire
(3) Geometry of the compartment and ventilation passages
(4) Heat release rate of the fire load and the floor covering system
(5) Heat capacity of the enclosing walls, ceiling, and floor

E.3 Experimental Studies of Relevance.

E.3.1 One important fire property of floor covering systems has been identified that, if the effective irradiance level can be predicted when fire occurs, can provide information on the extent of fire spread possibility. The use of this property alone, at least in some cases, is inadequate for the prediction of fire spread under severe exposure conditions. An example follows in E.3.1.1.

E.3.1.1 Figure E.3.1.1 shows a plot of the maximum heat flux to the floor surface of the NIST full-scale corridor with four 18 kg cribs in the burn room and with no combustible floor covering system or other interior finish present in the corridor. These data were obtained with a fire load in the adjoining room of 10.7 kg/m^2 with a measured burning rate (maximum) of 80 g/sec. The two curves show the envelope resulting from two series of experiments. [5]

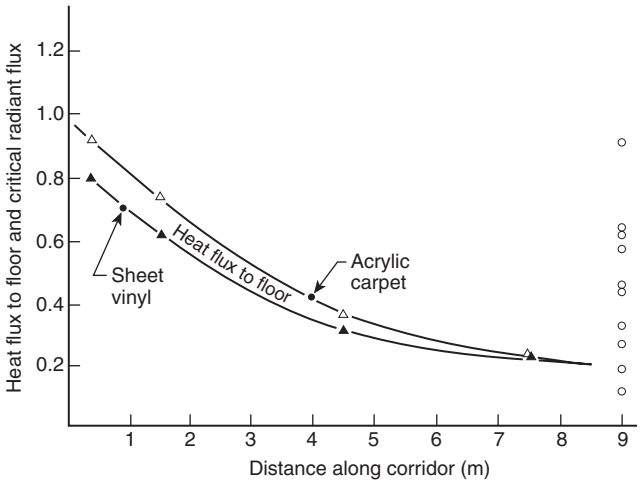

FIGURE E.3.1.1 Critical Radiant Flux of Various Floor Covering Systems Versus the Extent of Flame Propagation in the Corridor.

E.3.1.2 The data plotted as circles on Figure E.3.1.1 represent the critical radiant flux of 12 floor covering systems versus the extent of flame propagation in the corridor as tested using the full-scale tests. [6] In all cases, the heat flux to the floor covering system at the doorway between the room and the corridor was higher than the critical radiant flux for the material. Therefore, flame spread should be expected to include involvement of the corridor, and that was observed.

E.3.2 It is evident that only two of the 12 floor covering systems stopped burning at distances corresponding to their critical radiant flux as shown on the flux-distance curve for the corridor without combustible linings. The reason for this difference in behavior is that, apparently, the flux to the floor surface was sufficiently augmented by the heat release from the flooring itself after rapid flame spread commenced. This usually followed a period of relatively slow flame spread away from the doorway.

E.3.2.1 In addition, it seems likely that changes in ventilation of the compartment fire could have modified the location at which pyrolysis gases burn (i.e., in the corridor above the floor) and influenced the flame height of the floor fire. These effects greatly increased the radiant flux incident on the floor.

E.3.2.2 To date, the effects noted in E.3.2 and E.2.1 are not well understood, and no firm guidance can be provided on the way they should be introduced to predict the overall behavior of such a fire system.

E.3.3 Other data are available to illustrate the merit of the test under less severe exposure. These data are the result of a series of experiments involving crib or furniture item fires in a room 2.4 m in height with an open door measuring 3.4 m × 2.7 m that had been fitted with floor covering assemblies of known critical radiant flux characteristics. In these tests, the crib or furniture and the floor covering assembly were the only combustibles in the room.

E.3.4 The results of this study have been published, and Figure E.3.4 shows some of the data developed. [7] The curve shown in Figure E.3.4 illustrates the extent of fire propagation from the source as a function of critical radiant flux.

E.3.4.1 The four floor covering systems used were carpets that all qualified as having passed the pill test. The data are interesting, because they show that, under the conditions of

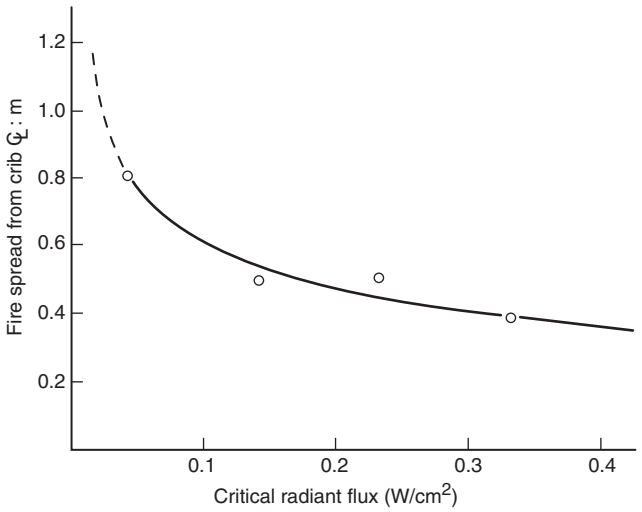

FIGURE E.3.4 Room Burn Tests — Fire Spread from 6.4 kg Cribs.

Copyright National Fire Protection Association
Provided by IHS under license with NFPA
No reproduction or networking permitted without license from IHS
Not for Resale

the experiments, the distance of fire propagation is inversely related to critical radiant flux.

E.3.4.2 In addition, while not demonstrated by this curve, the data show that the burning ceased at positions on the floor covering system somewhat below those at which flux measurement during the test corresponded to the critical radiant flux of the floor covering system being studied. Therefore, in this situation, which did not involve room flashover, critical radiant flux appears to provide a method of ranking the fire spread behavior of the carpets.

E.3.5 The current version of this test procedure is a result of a recent study conducted at NIST. [8] The purpose of this work was to resolve a perceived problem with ignitibility of and continued flame propagation across some carpet specimens and to reduce the variability of test results obtained by different laboratories. As a result, the following three significant changes were made in the standard:

(1) Specimen preparation and conditioning
(2) Tighter control of the airflow through the chamber during calibration and conduct of the test
(3) Replacement of the propane torch pilot burner with a propane line burner

E.3.5.1 The ignitibility and flame propagation issues appear to have been resolved by the use of the new line burner. The variability of test results among different laboratories has been shown to be markedly improved by the aforementioned changes in the standard, at least for one carpet fabric.

E.3.5.2 Previous proficiency rounds performed by the National Voluntary Laboratory Accreditation Program resulted in coefficients of variation ranging from 18 percent to 35 percent; the coefficient of variation obtained using the revised standard was less than 12 percent. A complete discussion of the research conducted by NIST can be found in the report referenced in E.3.5.

E.4 Summary.

E.4.1 It should be recognized that the critical radiant flux test method provides a useful way of ranking floor covering systems on the basis of this important fire property. However, critical radiant flux is only one of several parameters that determine the fire behavior of floor covering systems.

E.4.1.1 Critical radiant flux indicates the threshold above which flame spread occurs. To use this property in fire safety estimates, the probable heat flux exposure to the floor from the initiating fire needs to be judged. Such estimates must, for the present, depend on judgment or on data from prototype experiments.

E.4.1.2 Once a fire is initiated in a corridor, other parameters such as critical radiant flux for ignition and rate of flame spread, as well as corridor configuration and the presence of combustibles such as ceiling and wall linings, can be important in determining the ultimate spread of fire.

E.4.2 Because many parameters are involved in determining fire behavior, establishment of criteria for critical radiant flux of floor covering systems can be expected to reduce, but not to eliminate, the incidents of extensive flame spread of floor covering systems.

E.4.3 In this procedure, the specimens are subjected to one or more specific sets of laboratory fire test exposure conditions. If different test conditions are substituted or the anticipated end-use conditions are changed, it might not be possible to predict changes in the performance characteristics measured by using this test. Therefore, the results are valid only for the fire test exposure conditions described in this procedure.

E.4.4 If the test results obtained by this standard are to be considered in the total assessment of fire risk, then all pertinent established criteria for fire risk assessment are to be included in the consideration.

E.5 Research and Development.

E.5.1 For research and development purposes, it could be desirable to measure the rate of flame spread advance.

E.5.2 A metal scale marked at 10 mm intervals can be installed on the back of the platform or on the back wall of the chamber.

E.5.3 For fire hazard assessment purposes, it could be desirable to measure the extent of flame travel after a prescribed burning period (e.g., 15 minutes). The use of the metal scale described in E.5.2 is adequate for this purpose.

E.6 References.

(1) Fung, F. C. W., Suchomel, M. R., and Oglesby, P. L. "The NBS Program on Corridor Fires." *Fire Journal*, Vol. 61, No. 3 (1973), pp. 41– 48.
(2) Quintere, J., and Huggett, C. "An Evaluation of Flame Spread Test Methods for Floor Covering Materials." National Bureau of Standards Special Publication 411. Washington, DC: U.S. Government Printing Office, November 1974, pp. 59–89.
(3) Benjamin, I., and Adams, H. "The Flooring Radiant Panel Test and Proposed Criteria." *Fire Journal*, Vol. 70, No. 2 (March 1976).
(4) Quintere, J. "The Application and Interpretation of a Test Method to Determine the Hazard of Floor Covering Fire Spread in Building Corridors." International Symposium on Fire Safety of Combustible Materials, University of Edinburgh, October 1975.
(5) Quintere, J., private communication.
(6) Hartzel, L. G. "Development of a Radiant Panel Test for Flooring Materials." NBSIR 74-495. Gaithersburg, MD: National Bureau of Standards, May 1974.
(7) Tu, K-M, and Davis, S. "Flame Spread of Carpet Systems Involved in Room Fires." NBSIR 76-1013. Gaithersburg, MD: National Bureau of Standards, June 1976.
(8) Davis, S., Lawson, J. R., and Parker, W. J. "Examination of the Variability of the ASTM E 648 Standard with Respect to Carpets." NISTIR 89-4191. Gaithersburg, MD: National Institute of Standards and Technology, October 1989.

Annex F Precision and Bias

This annex is not a part of the requirements of this NFPA document but is included for informational purposes only.

F.1 Introduction. This statement is based on the results of two factorially designed experiments performed by 13 laboratories in which a total of 18 floor covering systems were tested.

F.2 Test Results. Defining a test result as the average of three replicate determinations, the repeatability (within laboratory variability) was about 20 percent of the measured value, and the reproducibility (among laboratory variability) was about

Copyright National Fire Protection Association
Provided by IHS under license with NFPA
No reproduction or networking permitted without license from IHS
Not for Resale

35 percent of the measured value. Based on changes that have been made in this standard, a new precision and bias statement is being prepared.

F.2.1 Repeatability is a quantity that is exceeded only about 5 percent of the time by the difference, taken in absolute value, of two randomly selected results obtained by the same laboratory on a given material. *(See Mandel, "Repeatability and Reproducibility.")*

F.2.2 Reproducibility is exceeded only about 5 percent of the time by the difference, taken in absolute value, of two single test results made on the same material by two randomly selected laboratories.

Annex G Safety Precautions

This annex is not a part of the requirements of this NFPA document but is included for informational purposes only.

G.1 Gas–Air Fuel Explosions. The possibility of a gas–air fuel explosion in the test chamber should be recognized.

G.1.1 Safeguards should be installed in the panel fuel supply system.

G.1.2 Safeguards should include one or more of the following:

(1) Gas feed cutoff that is activated when the air supply fails
(2) Fire sensor directed at the panel surface that stops fuel flow when the panel flame goes out
(3) Commercial gas water heater or gas-fired furnace pilot burner control thermostatic shutoff that is activated when the gas supply fails

G.1.3 Safeguards should be arranged for a manual reset.

G.2 Exhaust System. The exhaust system should be designed and operated so that the laboratory environment is protected from smoke and gas.

G.2.1 Operator exposure to combustion products should be minimized.

G.2.2 The operator should ensure that the exhaust system is working properly and should wear appropriate clothing, including gloves.

Annex H Informational References

H.1 Referenced Publications. The following documents or portions thereof are referenced within this standard for informational purposes only and are thus not part of the requirements of this document unless also listed in Chapter 2.

H.1.1 NFPA Publications. (Reserved)

H.1.2 Other Publications.

Benjamin, I., and Adams, H. "The Flooring Radiant Panel Test and Proposed Criteria." *Fire Journal*, Vol. 70, No. 2, March 1976.

Davis, S., Lawson, J. R., and Parker, W. J., "Examination of the Variability of the ASTM E 648 Standard with Respect to Carpets." NISTIR 89-4191. Gaithersburg, MD National Institute of Standards and Technology, October 1989.

Fung, F. C. W., Suchomel, M. R., and Oglesby, P. L. "The NBS Program on Corridor Fires." *Fire Journal*, Vol. 61, No. 3 (1973), pp. 41– 48.

Hartzel, L. G. "Development of a Radiant Panel Test for Flooring Materials." NBSIR 74-495. Gaithersburg, MD: National Bureau of Standards, May 1974.

Mandel, J., "Repeatability and Reproducibility.," *Materials Research and Standards*, MTRSA, Vol. 11, No. 8, p. 8.

Quintere, J., and Huggett, C. "An Evaluation of Flame Spread Test Methods for Floor Covering Materials." National Bureau of Standards Special Publication 411. Washington, DC: U.S. Government Printing Office, November 1974, pp. 59–89.

Quintere, J., "The Application and Interpretation of a Test Method to Determine the Hazard of Floor Covering Fire Spread in Building Corridors," International Symposium on Fire Safety of Combustible Materials, University of Edinburgh, October 1975.

Tu, K-M., and Davis, S., "Flame Spread of Carpet Systems Involved in Room Fires." NBSIR 76-1013. Gaithersburg, MD: National Bureau of Standards, June 1976.

H.1.2.1 U.S. Government Publication. U.S. Government Printing Office, Washington, DC 20402.

Federal Specification DDD-C-001023 (GSA-FSS), *Type II — Rubber Coated Jute and Animal Hair or Fiber*, Amendment 1, March 10, 1972.

H.2 Informational References. (Reserved)

H.3 References for Extracts in Informational Sections. (Reserved)

--`,,```,,,-`-`,,`,,`,`,,`---

Copyright National Fire Protection Association
Provided by IHS under license with NFPA
No reproduction or networking permitted without license from IHS
Not for Resale

Index

© 2005 National Fire Protection Association. All Rights Reserved.

The copyright in this index is separate and distinct from the copyright in the document that it indexes. The licensing provisions set forth for the document are not applicable to this index. This index may not be reproduced in whole or in part by any means without the express written permission of NFPA.

-A-

Application of standard 1.3, A.1.3.3
Approved (definition) 3.2.1, A.3.2.1

-B-

Bias of test ..... Annex F
Blackbody temperature 4.3.7, 6.1.11, 7.1.4, 7.1.5, 7.8.1
Definition 3.3.1

-C-

Calculations ..... Chap. 8
Calibration of apparatus ..... Annex B
Carpet specimens ..... 7.2.3, A.5.2.2, C.2.1 to C.2.3
Chamber temperature 4.6.2, 6.1.11, 7.1.4, 7.1.5, 7.8.1
Commentary on test ..... Annex E
Corridors E.1.3, E.2.1, E.3
Definition 3.3.2
Critical radiant flux ..... 1.1.2, 1.4.3, 7.6.1, 9.1(5), A.1.1.2
Definition 3.3.3

-D-

Data collection and recording ..... 6.1.10, 7.6, Annex D
Definitions ..... Chap. 3
Dummy specimens 4.7.2, 4.8, 6.1.3, A.4.8.3.3

-E-

Exhaust hoods 4.7, A.4.7
Exhaust system G.2

-F-

Fire sensors ..... G.1.2(2)
Flameout 1.1.2, 1.4.3, 7.4.1, 7.6.1
Definition 3.3.4, A.3.3.4
Flame propagation of specimen 7.4
Floor covering (definition) 3.3.5
Floor covering system (definition) 3.3.6
Flooring
Definition 3.3.7
Hardwood ..... A.5.2.2(1), C.4
Resilient ..... A.5.2.2(5), C.3
Flux profile 7.6.1
Definition 3.3.8
Example of D.1
Standardization procedure ..... Chap. 6

-G-

Gas–air fuel explosions G.1
Gas feed cutoffs ..... G.1.2(1)

-H-

Hardwood flooring ..... A.5.2.2(1), C.4
Hood, exhaust 4.7, A.4.7

-M-

Mounting methods ..... 5.2, 7.2, A.5.2.2, Annex C

-P-

Pilot burner control thermostatic shutoff ..... G.1.2(3)
Pilot burners 4.5, 6.1.4.2
Ignition of 1.4.2, 7.3
Precision of test results ..... Annex F
Pretest heating 7.1
Purpose of standard 1.2, A.1.2.1

-R-

Radiant heat energy flux profile ..... *see* Flux profile
Radiant heat energy source 4.3
Radiant panel test apparatus 1.4.1, 4.1, 4.7.2, 6.1.4, 7.1
Test data log D.1
Radiation pyrometer 4.3.6, 4.3.7, B.1
References ..... Chap. 2, Annex H
Repeatability of test F.2
Report of results ..... Chap. 9
Research and development E.5
Resilient flooring ..... A.5.2.2(5), C.3

-S-

Safety precautions ..... Annex G
Sample data logs ..... Annex D
Sample holder 7.2
Sample mounting ..... *see* Mounting methods
Scope of standard 1.1, A.1.1.2
Shall (definition) 3.2.2
Should (definition) 3.2.3
Specimen holder 4.2.2, 4.4, A.4.4
Specimens
Dummy ..... *see* Dummy specimens
Test ..... *see* Test specimens
Standard (definition) 3.2.4
Standard simulated concrete subfloor 1.4.4, A.5.2.2
Definition 3.3.9
Subsequent testing 7.8
Summary of method 1.4

-T-

Temperature
Blackbody ..... *see* Blackbody temperature
Chamber ..... *see* Chamber temperature
Test apparatus ..... Chap. 4
Calibration of ..... Annex B
Test chamber 4.2
Test data log D.1
Test method, summary of 1.4
Test procedure ..... Chap. 7
Test specimens ..... Chap. 5
Conditioning 5.3
Exposure to pilot burner flame 7.3
Flame propagation of 7.4
Removal of 7.7
Sampling procedure 5.1
Size and mounting 5.2, 7.2, A.5.2.2
Thermocouples 4.6
Timer 4.9
Total flux meter 6.1.7, 6.1.9
Calibration of 4.8.3.3, A.4.8.3.3, B.2
Definition 3.3.10
Total heat flux transducer ..... 4.8.3.3 to 4.8.3.5, A.4.8.3.3

Copyright National Fire Protection Association
Provided by IHS under license with NFPA
No reproduction or networking permitted without license from IHS
Not for Resale

Sequence of Events Leading to Publication of an NFPA Committee Document

Call goes out for proposals to amend existing document or for recommendations on new document.

▼

Committee meets to act on proposals, to develop its own proposals, and to prepare its report.

▼

Committee votes on proposals by letter ballot. If two-thirds approve, report goes forward. Lacking two-thirds approval, report returns to committee.

▼

Report — *Report on Proposals* (ROP) — is published for public review and comment.

▼

Committee meets to act on each public comment received.

▼

Committee votes on comments by letter ballot. If two-thirds approve, supplementary report goes forward. Lacking two-thirds approval, supplementary report returns to committee.

▼

Supplementary report — *Report on Comments* (ROC) — is published for public review.

▼

NFPA membership meets (Annual or Fall Meeting) and acts on committee report (ROP or ROC).

▼

Committee votes on any amendments to report approved at NFPA Annual or Fall Meeting.

▼

Appeals to Standards Council on Association action must be filed within 20 days of the NFPA Annual or Fall Meeting.

▼

Standards Council decides, based on all evidence, whether or not to issue standard or to take other action, including upholding any appeals.

Committee Membership Classifications

The following classifications apply to Technical Committee members and represent their principal interest in the activity of the committee.

M *Manufacturer:* A representative of a maker or marketer of a product, assembly, or system, or portion thereof, that is affected by the standard.

U *User:* A representative of an entity that is subject to the provisions of the standard or that voluntarily uses the standard.

I/M *Installer/Maintainer:* A representative of an entity that is in the business of installing or maintaining a product, assembly, or system affected by the standard.

L *Labor:* A labor representative or employee concerned with safety in the workplace.

R/T *Applied Research/Testing Laboratory:* A representative of an independent testing laboratory or independent applied research organization that promulgates and/or enforces standards.

E *Enforcing Authority:* A representative of an agency or an organization that promulgates and/or enforces standards.

I *Insurance:* A representative of an insurance company, broker, agent, bureau, or inspection agency.

C *Consumer:* A person who is, or represents, the ultimate purchaser of a product, system, or service affected by the standard, but who is not included in the *User* classification.

SE *Special Expert:* A person not representing any of the previous classifications, but who has a special expertise in the scope of the standard or portion thereof.

NOTES:

1. "Standard" connotes code, standard, recommended practice, or guide.
2. A representative includes an employee.
3. While these classifications will be used by the Standards Council to achieve a balance for Technical Committees, the Standards Council may determine that new classifications of members or unique interests need representation in order to foster the best possible committee deliberations on any project. In this connection, the Standards Council may make such appointments as it seems appropriate in the public interest, such as the classification of "Utilities" in the National Electrical Code Committee.
4. Representatives of subsidiaries of any group are generally considered to have the same classification as the parent organization.

Copyright National Fire Protection Association
Provided by IHS under license with NFPA
No reproduction or networking permitted without license from IHS
Not for Resale

NFPA Technical Committee Document Proposal Form

Note: All proposals must be received by 5:00 p.m. EST/EDST on the published proposal closing date.

For further information on the standards-making process, please contact Codes and Standards Administration at 617-984-7249. For technical assistance, please call NFPA at 617-770-3000.

FOR OFFICE USE ONLY
Log #: _____
Date Rec'd: _____

Please indicate in which format you wish to receive your ROP/ROC: ☐ **CD ROM** ☐ **paper** ☐ **download**
(Note: In choosing the download option you intend to view the ROP/ROC from our Website. No copy will be sent to you.)

Date 12/18/02 **Name** John B. Smith **Telephone** 617-555-1212
Company _____
Address 9 Seattle St. **City** Seattle **State** WA **Zip** 02255
Please indicate organization represented (if any) Fire Marshals Assn. of North America

1. **a) NFPA Document Title** National Fire Alarm Code
   b) NFPA No. & Edition NFPA 72, 2002 ed. **c) Section/Paragraph** 4.4.7.1.1

2. **Proposal Recommends:** *(check one)* ☐ **new text** ☐ **revised text** ☒ **deleted text**

3. **Proposal.** *(Include proposed new or revised wording, or identification of wording to be deleted.)* Note: Proposed text should be in legislative format, that is, use underscore to denote wording to be inserted (inserted wording) and strike-through to denote wording to be deleted (~~deleted wording~~). Delete exception.

4. **Statement of Problem and Substantiation for Proposal.** Note: State the problem that will be resolved by your recommendation. Give the specific reason for your proposal including copies of tests, research papers, fire experience, etc. If more than 200 words, it may be abstracted for publication. A properly installed and maintained system should be free of ground faults. The occurrence of one or more ground faults should be required to cause a "trouble" signal because it indicates a condition that could contribute to future malfunction of the system. Ground fault protection has been widely available on these systems for years and its cost is negligible. Requiring it on all systems will promote better installations, maintenance and reliability.

5. ☒ **This Proposal is Original Material.** Note: Original material is considered to be the submitter's own idea based on or as a result of his/her own experience, thought, or research and, to the best of his/her knowledge, is not copied from another source.

   ☐ **This Proposal is Not Original Material; Its Source** ***(if known)*** **is as Follows:** _____

Sample

I hereby grant the NFPA all and full rights in copyright to this proposal, and I understand that I acquire no rights in any publication of NFPA in which this proposal in this or another similar or analogous form is used.

Signature ***(Required)*** John B. Smith

PLEASE USE SEPARATE FORM FOR EACH PROPOSAL • NFPA FAX (617) 770-3500

Mail to: Secretary, Standards Council • NFPA • 1 Batterymarch Park • PO Box 9101 • Quincy, MA 02269-9101

Copyright National Fire Protection Association
Provided by IHS under license with NFPA
No reproduction or networking permitted without license from IHS
Not for Resale

NFPA Technical Committee Document Proposal Form

Note: All proposals must be received by 5:00 p.m. EST/EDST on the published proposal closing date.

For further information on the standards-making process, please contact Codes and Standards Administration at 617-984-7249. For technical assistance, please call NFPA at 617-770-3000.

FOR OFFICE USE ONLY
Log #: _____
Date Rec'd: _____

Please indicate in which format you wish to receive your ROP/ROC: ☐ **CD ROM** ☐ **paper** ☐ **download**
(Note: In choosing the download option you intend to view the ROP/ROC from our Website. No copy will be sent to you.)

Date _____ **Name** _____ **Telephone** _____
Company _____
Address _____ **City** _____ **State** _____ **Zip** _____
Please indicate organization represented (if any) _____

1. **a) NFPA Document Title** _____
   b) NFPA No. & Edition _____ **c) Section/Paragraph** _____

2. **Proposal Recommends:** *(check one)* ☐ **new text** ☐ **revised text** ☐ **deleted text**

3. **Proposal.** *(Include proposed new or revised wording, or identification of wording to be deleted.)* Note: Proposed text should be in legislative format, that is, use underscore to denote wording to be inserted (inserted wording) and strike-through to denote wording to be deleted (~~deleted wording~~). _____

4. **Statement of Problem and Substantiation for Proposal.** Note: State the problem that will be resolved by your recommendation. Give the specific reason for your proposal including copies of tests, research papers, fire experience, etc. If more than 200 words, it may be abstracted for publication. _____

5. ☐ **This Proposal is Original Material.** Note: Original material is considered to be the submitter's own idea based on or as a result of his/her own experience, thought, or research and, to the best of his/her knowledge, is not copied from another source.

   ☐ **This Proposal is Not Original Material; Its Source *(if known)* is as Follows:** _____

I hereby grant the NFPA all and full rights in copyright to this proposal, and I understand that I acquire no rights in any publication of NFPA in which this proposal in this or another similar or analogous form is used.

Signature *(Required)* _____

PLEASE USE SEPARATE FORM FOR EACH PROPOSAL • NFPA FAX (617) 770-3500

Mail to: Secretary, Standards Council • NFPA • 1 Batterymarch Park • PO Box 9101 • Quincy, MA 02269-9101

Copyright National Fire Protection Association
Provided by IHS under license with NFPA
No reproduction or networking permitted without license from IHS
Not for Resale