NFPA® 252

Standard Methods of Fire Tests of Door Assemblies

2008 Edition



NFPA, 1 Batterymarch Park, Quincy, MA 02169-7471
An International Codes and Standards Organization

--`,,```,,,,````-`-`,,`,,`,`,,`---

Copyright National Fire Protection Association
Provided by IHS under license with NFPA
No reproduction or networking permitted without license from IHS

Not for Resale

IMPORTANT NOTICES AND DISCLAIMERS CONCERNING NFPA DOCUMENTS

NOTICE AND DISCLAIMER OF LIABILITY CONCERNING THE USE OF NFPA DOCUMENTS

NFPA codes, standards, recommended practices, and guides, of which the document contained herein is one, are developed through a consensus standards development process approved by the American National Standards Institute. This process brings together volunteers representing varied viewpoints and interests to achieve consensus on fire and other safety issues. While the NFPA administers the process and establishes rules to promote fairness in the development of consensus, it does not independently test, evaluate, or verify the accuracy of any information or the soundness of any judgments contained in its codes and standards.

The NFPA disclaims liability for any personal injury, property or other damages of any nature whatsoever, whether special, indirect, consequential or compensatory, directly or indirectly resulting from the publication, use of, or reliance on this document. The NFPA also makes no guaranty or warranty as to the accuracy or completeness of any information published herein.

In issuing and making this document available, the NFPA is not undertaking to render professional or other services for or on behalf of any person or entity. Nor is the NFPA undertaking to perform any duty owed by any person or entity to someone else. Anyone using this document should rely on his or her own independent judgment or, as appropriate, seek the advice of a competent professional in determining the exercise of reasonable care in any given circumstances.

The NFPA has no power, nor does it undertake, to police or enforce compliance with the contents of this document. Nor does the NFPA list, certify, test or inspect products, designs, or installations for compliance with this document. Any certification or other statement of compliance with the requirements of this document shall not be attributable to the NFPA and is solely the responsibility of the certifier or maker of the statement.

Copyright National Fire Protection Association
Provided by IHS under license with NFPA
No reproduction or networking permitted without license from IHS
Not for Resale

ADDITIONAL NOTICES AND DISCLAIMERS

Updating of NFPA Documents

Users of NFPA codes, standards, recommended practices, and guides should be aware that these documents may be superseded at any time by the issuance of new editions or may be amended from time to time through the issuance of Tentative Interim Amendments. An official NFPA document at any point in time consists of the current edition of the document together with any Tentative Interim Amendments and any Errata then in effect. In order to determine whether a given document is the current edition and whether it has been amended through the issuance of Tentative Interim Amendments or corrected through the issuance of Errata, consult appropriate NFPA publications such as the National Fire Codes® Subscription Service, visit the NFPA website at www.nfpa.org, or contact the NFPA at the address listed below.

Interpretations of NFPA Documents

A statement, written or oral, that is not processed in accordance with Section 6 of the Regulations Governing Committee Projects shall not be considered the official position of NFPA or any of its Committees and shall not be considered to be, nor be relied upon as, a Formal Interpretation.

Patents

The NFPA does not take any position with respect to the validity of any patent rights asserted in connection with any items which are mentioned in or are the subject of NFPA codes, standards, recommended practices, and guides, and the NFPA disclaims liability for the infringement of any patent resulting from the use of or reliance on these documents. Users of these documents are expressly advised that determination of the validity of any such patent rights, and the risk of infringement of such rights, is entirely their own responsibility.

NFPA adheres to applicable policies of the American National Standards Institute with respect to patents. For further information contact the NFPA at the address listed below.

Law and Regulations

Users of these documents should consult applicable federal, state, and local laws and regulations. NFPA does not, by the publication of its codes, standards, recommended practices, and guides, intend to urge action that is not in compliance with applicable laws, and these documents may not be construed as doing so.

Copyrights

This document is copyrighted by the NFPA. It is made available for a wide variety of both public and private uses. These include both use, by reference, in laws and regulations, and use in private self-regulation, standardization, and the promotion of safe practices and methods. By making this document available for use and adoption by public authorities and private users, the NFPA does not waive any rights in copyright to this document.

Use of NFPA documents for regulatory purposes should be accomplished through adoption by reference. The term "adoption by reference" means the citing of title, edition, and publishing information only. Any deletions, additions, and changes desired by the adopting authority should be noted separately in the adopting instrument. In order to assist NFPA in following the uses made of its documents, adopting authorities are requested to notify the NFPA (Attention: Secretary, Standards Council) in writing of such use. For technical assistance and questions concerning adoption of NFPA documents, contact NFPA at the address below.

For Further Information

All questions or other communications relating to NFPA codes, standards, recommended practices, and guides and all requests for information on NFPA procedures governing its codes and standards development process, including information on the procedures for requesting Formal Interpretations, for proposing Tentative Interim Amendments, and for proposing revisions to NFPA documents during regular revision cycles, should be sent to NFPA headquarters, addressed to the attention of the Secretary, Standards Council, NFPA, 1 Batterymarch Park, P.O. Box 9101, Quincy, MA 02269-9101.

For more information about NFPA, visit the NFPA website at www.nfpa.org.

Copyright National Fire Protection Association
Provided by IHS under license with NFPA
No reproduction or networking permitted without license from IHS
Not for Resale

Copyright © 2007 National Fire Protection Association. All Rights Reserved.

NFPA 252

Standard Methods of

Fire Tests of Door Assemblies

2008 Edition

This edition of NFPA 252, *Standard Methods of Fire Tests of Door Assemblies,* was prepared by the Technical Committee on Fire Tests. It was issued by the Standards Council on June 4, 2007, with an effective date of June 24, 2007, and supersedes all previous editions. This edition of NFPA 252 was approved as an American National Standard on June 24, 2007.

Origin and Development of NFPA 252

The American Society of Testing and Materials (ASTM) adopted *Standard Methods of Fire Tests of Door Assemblies* as a tentative standard in 1940 and as a formal standard in 1941. In 1942, the standard was adopted by the NFPA and approved by the American Standards Association. It was reconfirmed and adopted in 1950 by the Committee on Fire Tests of Building Construction and Materials. In 1953, a new NFPA Committee on Fire Tests was formed by action of the Board of Directors, and recommendations for revision of the standard made by that committee were adopted in 1958, 1969, 1972, 1976, 1979, 1984, and 1990.

The basic procedure covered by this standard was developed by Underwriters Laboratories Inc. and has not undergone any significant revisions to the original concept. The 1995 edition introduced a new provision addressing the neutral plane of the furnace. That provision permits the testing agency to establish the neutral plane of the test furnace to the specification of the particular need, by conducting the test under either positive pressure or atmospheric pressure.

The 1999 edition of NFPA 252 contained further editorial refinements to harmonize the procedures and terminology with those found in NFPA 251, *Standard Methods of Tests of Fire Resistance of Building Construction and Materials*; NFPA 257, *Standard on Fire Test for Window and Glass Block Assemblies*; and NFPA 80, *Standard for Fire Doors and Other Opening Protectives*. The 1999 edition also provided greater clarification for the hose stream application and procedure and the application and reporting of positive pressure testing for door assemblies.

For the 2003 edition, the chapter layout of NFPA 252 was reorganized to meet the *Manual of Style for NFPA Technical Committee Documents,* with minor editorial revisions.

Revisions for the 2008 edition include tighter tolerances for furnace control and the replacement of the detailed hose stream test procedures by a reference to ASTM E 2226, *Standard Practice for Application of Hose Stream.*

Copyright National Fire Protection Association
Provided by IHS under license with NFPA
No reproduction or networking permitted without license from IHS
Not for Resale

Technical Committee on Fire Tests

William E. Fitch, *Chair*
Phyrefish Enterprises, Inc., FL [SE]

Farid Alfawakhiri, American Iron and Steel Institute, IL [M]
Barry L. Badders, Jr., Southwest Research Institute, TX [RT]
Jesse J. Beitel, Hughes Associates, Inc., MD [SE]
April L. Berkol, Starwood Hotels & Resorts Worldwide, Inc., NY [U]
Rep. American Hotel & Lodging Association
Robert G. Bill, Jr., FM Global, MA [I]
John A. Blair, The DuPont Company, DE [M]
Rep. Society of the Plastics Industry, Inc.
Gordon H. Damant, Inter-City Testing & Consulting Corp. of California, CA [SE]
Thomas W. Fritz, Armstrong World Industries, Inc., PA [M]
Gordon E. Hartzell, Hartzell Consulting, Inc., TX [SE]
Marcelo M. Hirschler, GBH International, CA [SE]
Alfred J. Hogan, Reedy Creek Improvement District, FL [E]
Rep. International Fire Marshals Association
William E. Koffel, Koffel Associates, Inc., MD [SE]
James R. Lawson, U.S. National Institute of Standards and Technology, MD [RT]
Rodney A. McPhee, Canadian Wood Council, Canada [M]
Frederick W. Mowrer, University of Maryland, MD [SE]
Deggary N. Priest, Intertek Testing Services NA, Inc., TX [RT]
David T. Sheppard, U.S. Department of the Treasury, MD [RT]
Dwayne E. Sloan, Underwriters Laboratories Inc., NC [RT]
Kuma Sumathipala, American Forest & Paper Association, DC [M]
Rep. American Forest & Paper Association
T. Hugh Talley, Hugh Talley Company, TN [M]
Rep. Upholstered Furniture Action Council
Rick Thornberry, The Code Consortium, Inc., CA [SE]
William A. Webb, Schirmer Engineering Corporation, IL [I]
Robert A. Wessel, Gypsum Association, DC [M]

Alternates

Scott W. Adams, Park City Fire Service District, UT [E]
(Alt. to A. J. Hogan)
Robert M. Berhinig, Underwriters Laboratories Inc., IL [RT]
(Alt. to D. E. Sloan)
Richard J. Davis, FM Global, MA [I]
(Alt. to R. G. Bill, Jr.)
Sam W. Francis, American Forest & Paper Association, PA [M]
(Alt. to K. Sumathipala)
Richard G. Gann, Ph.D., U.S. National Institute of Standards and Technology, MD [RT]
(Alt. to J. R. Lawson)
Paul A. Hough, Armstrong World Industries, Inc., PA [M]
(Alt. to T. W. Fritz)
Marc L. Janssens, Southwest Research Institute, TX [RT]
(Alt. to B. L. Badders, Jr.)
James K. Lathrop, Koffel Associates, Inc., CT [SE]
(Alt. to W. E. Koffel)
James A. Milke, University of Maryland, MD [SE]
(Alt. to F. W. Mowrer)
Arthur J. Parker, Hughes Associates, Inc., MD [SE]
(Alt. to J. J. Beitel)
Ineke Van Zeeland, Canadian Wood Council, Canada [M]
(Alt. to R. A. McPhee)
Robert J. Wills, American Iron and Steel Institute, AL [M]
(Alt. to F. Alfawakhiri)
Joe Ziolkowski, American Furniture Manufacturers Association, NC [M]
(Alt. to T. H. Talley)

Nonvoting

Robert H. Barker, American Fiber Manufacturers Association, VA [M]
Rohit Khanna, U.S. Consumer Product Safety Commission, MD [C]

Gregory E. Harrington, NFPA Staff Liaison

This list represents the membership at the time the Committee was balloted on the final text of this edition. Since that time, changes in the membership may have occurred. A key to classifications is found at the back of the document.

NOTE: Membership on a committee shall not in and of itself constitute an endorsement of the Association or any document developed by the committee on which the member serves.

Committee Scope: This Committee shall have primary responsibility for documents on fire testing procedures, for reviewing existing fire test standards and recommending appropriate action to NFPA, for recommending the application of and advising on the interpretation of acceptable test standards for fire problems of concern to NFPA technical committees and members, and for acting in a liaison capacity between NFPA and the committees of other organizations writing fire test standards. This Committee does not cover fire tests that are used to evaluate extinguishing agents, devices, or systems.

Copyright National Fire Protection Association
Provided by IHS under license with NFPA
No reproduction or networking permitted without license from IHS
Not for Resale

Contents

Chapter 1 Administration **252–** 4
1.1 Scope **252–** 4
1.2 Purpose **252–** 4
1.3 Application **252–** 4

Chapter 2 Referenced Publications **252–** 4
2.1 General **252–** 4
2.2 NFPA Publications **252–** 4
2.3 Other Publications **252–** 4
2.4 References for Extracts in Mandatory Sections **252–** 5

Chapter 3 Definitions **252–** 5
3.1 General **252–** 5
3.2 NFPA Official Definitions **252–** 5
3.3 General Definitions **252–** 5

Chapter 4 Control of Fire Test **252–** 5
4.1 Temperature–Time Curve **252–** 5
4.2 Furnace Temperatures **252–** 5
4.3 Unexposed Surface Temperatures **252–** 6

Chapter 5 Fire Door Assembly **252–** 6
5.1 Construction and Size **252–** 6
5.2 Mounting **252–** 6
5.3 Clearances **252–** 6
5.4 Test Wall **252–** 7

Chapter 6 Conduct of Tests **252–** 7
6.1 Fire Test **252–** 7
6.2 Hose Stream Test **252–** 7

Chapter 7 Performance Criteria **252–** 8
7.1 General **252–** 8
7.2 Swinging Doors **252–** 8
7.3 Sliding Doors **252–** 8

Chapter 8 Report **252–** 9
8.1 Results **252–** 9

Annex A Explanatory Material **252–**10

Annex B Commentary **252–**11

Annex C Informational References **252–**14

Index **252–**15

Copyright National Fire Protection Association
Provided by IHS under license with NFPA
No reproduction or networking permitted without license from IHS
Not for Resale

NFPA 252

Standard Methods of

Fire Tests of Door Assemblies

2008 Edition

IMPORTANT NOTE: This NFPA document is made available for use subject to important notices and legal disclaimers. These notices and disclaimers appear in all publications containing this document and may be found under the heading "Important Notices and Disclaimers Concerning NFPA Documents." They can also be obtained on request from NFPA or viewed at www.nfpa.org/disclaimers.

NOTICE: An asterisk (*) following the number or letter designating a paragraph indicates that explanatory material on the paragraph can be found in Annex A.

Changes other than editorial are indicated by a vertical rule beside the paragraph, table, or figure in which the change occurred. These rules are included as an aid to the user in identifying changes from the previous edition. Where one or more complete paragraphs have been deleted, the deletion is indicated by a bullet (•) between the paragraphs that remain.

A reference in brackets [ ] following a section or paragraph indicates material that has been extracted from another NFPA document. As an aid to the user, the complete title and edition of the source documents for extracts in mandatory sections of the document are given in Chapter 2 and those for extracts in informational sections are given in Annex C. Editorial changes to extracted material consist of revising references to an appropriate division in this document or the inclusion of the document number with the division number when the reference is to the original document. Requests for interpretations or revisions of extracted text shall be sent to the technical committee responsible for the source document.

Information on referenced publications can be found in Chapter 2, Annex B, and Annex C.

Chapter 1 Administration

1.1 Scope. This standard prescribes standardized fire and hose stream test procedures that apply to fire door assemblies intended to be used to retard the spread of fire through door openings in fire-resistive walls.

1.2 Purpose.

1.2.1 The purpose of this standard is to prescribe specific fire and hose stream test procedures for fire door assemblies in order to standardize a method for determining the degree of fire protection provided by such assemblies in retarding the spread of fire (flame, heat, and hot gases) through door openings in fire-resistive walls.

1.2.2 The degree of fire protection measured in units of time is not an absolute value because all possible actual fire scenarios are not represented by the standard fire exposure described herein.

1.2.3 This standard allows different fire door assemblies to be compared with each other in order to evaluate their relative performance as measured against a standard fire exposure.

1.3 Application.

1.3.1 This standard is intended to evaluate the ability of a door assembly to remain in a wall opening during a prescribed fire test exposure, which is then followed by the application of a prescribed hose stream.

1.3.2 Tests conducted as described in these standard test methods measure the performance of fire door assemblies during the test exposure and develop data that enable regulatory bodies to require fire door assemblies for use in wall openings where fire protection is required.

1.3.3 The tests described in these standard test methods expose a specimen to a standard fire exposure that is controlled to achieve specified temperatures throughout a specified time period, which is then followed by the application of a specified standard hose stream. The fire exposure, however, is not representative of all fire conditions, which vary with changes in the amount, nature, and distribution of fire loading, ventilation, compartment size and configuration, and heat sink characteristics of the compartment. The fire exposure does, however, provide a relative measure of the performance of fire door assemblies under these specified fire exposure conditions. Similarly, the hose stream exposure is not representative of all applications of actual hose streams used by a fire department during fire suppression efforts.

1.3.4 Any variation from, or change to, the construction or conditions of the door assembly as tested can change the performance characteristics of the fire door assembly.

1.3.5 These tests shall not be construed as determining the suitability of fire door assemblies for continued use after exposure to real fires.

1.3.6 This standard shall not be used to provide the following:

(1) Full information regarding the performance of specific fire door assemblies where installed in walls constructed of materials other than those tested
(2) Evaluation of the degree to which the fire door assembly contributes to the fire hazard by generation of smoke, toxic gases, or other products of combustion
(3) Measurement that determines a limit on the number and size of vision panels permitted or the number and size of lateral openings permitted between the door and frame
(4) Measurement of the fire door assembly's ability to control or limit the passage of smoke or similar products of combustion through the assembly
(5) Measurement that determines a specific temperature limit on the unexposed surface of the fire door assembly

Chapter 2 Referenced Publications

2.1 General. The documents or portions thereof listed in this chapter are referenced within this standard and shall be considered part of the requirements of this document.

2.2 NFPA Publications. National Fire Protection Association, 1 Batterymarch Park, Quincy, MA 02169-7471.

NFPA 251, *Standard Methods of Tests of Fire Resistance of Building Construction and Materials,* 2006 edition.

2.3 Other Publications.

2.3.1 ASTM Publications. ASTM International, 100 Barr Harbor Drive, P.O. Box C700, West Conshohocken, PA 19428-2959.

ASTM E 2226, *Standard Practice for Application of Hose Stream,* 2002.

Copyright National Fire Protection Association
Provided by IHS under license with NFPA
No reproduction or networking permitted without license from IHS
Not for Resale

2.3.2 Other Publications.

Merriam-Webster's Collegiate Dictionary, 11th edition, Merriam-Webster, Inc., Springfield, MA, 2003.

2.4 References for Extracts in Mandatory Sections.

NFPA 80, *Standard for Fire Doors and Other Opening Protectives,* 2007 edition.

Chapter 3 Definitions

3.1 General. The definitions contained in this chapter shall apply to the terms used in this standard. Where terms are not defined in this chapter or within another chapter, they shall be defined using their ordinarily accepted meanings within the context in which they are used. *Merriam-Webster's Collegiate Dictionary*, 11th edition, shall be the source for the ordinarily accepted meaning.

3.2 NFPA Official Definitions.

3.2.1 Shall. Indicates a mandatory requirement.

3.2.2 Should. Indicates a recommendation or that which is advised but not required.

3.2.3 Standard. A document, the main text of which contains only mandatory provisions using the word "shall" to indicate requirements and which is in a form generally suitable for mandatory reference by another standard or code or for adoption into law. Nonmandatory provisions shall be located in an appendix or annex, footnote, or fine-print note and are not to be considered a part of the requirements of a standard.

3.3 General Definitions.

3.3.1 Door Assembly. Any combination of a door, frame, hardware, and other accessories that is placed in an opening in a wall that is intended primarily for access or for human entrance or exit.

3.3.1.1 ***Fire Door Assembly.*** Any combination of a fire door, a frame, hardware, and other accessories that together provide a specific degree of fire protection to the opening. [**80,** 2007]

3.3.2 Opening. A through-hole in the fire door assembly that can be seen from the unexposed side while looking through the plane of the assembly from a perpendicular position.

3.3.3 Vision Panel. A glazing material installed in a fire door assembly to allow for viewing through the fire door assembly.

Chapter 4 Control of Fire Test

4.1 Temperature–Time Curve.

4.1.1* The temperature inside the furnace to which the fire door assembly is exposed during the fire test shall be controlled to conform to the standard temperature–time curve shown in Figure 4.1.1 for the duration of the fire test.

4.1.2 At the start of the fire test, the temperature inside the furnace shall be ambient.

4.2 Furnace Temperatures.

4.2.1 The temperature of the furnace shall be determined by the average temperature obtained from the readings of not less than nine thermocouples symmetrically disposed and distributed within the furnace to measure the temperature near all parts of the fire door assembly.

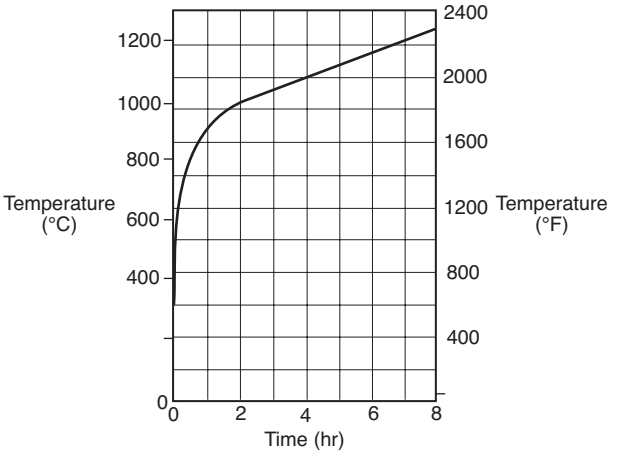

Note: The following points determine the curve:

538°C (1000°F).....at 5 minutes
704°C (1300°F).....at 10 minutes
843°C (1550°F).....at 30 minutes
927°C (1700°F).....at 1 hour
1010°C (1850°F).....at 2 hours
1093°C (2000°F).....at 4 hours
1260°C (2300°F).....at 8 hours or over

FIGURE 4.1.1 Temperature–Time Curve.

4.2.1.1 The thermocouples shall be protected in one of the following ways:

(1) By sealed porcelain tubes having a 19 mm (¾ in.) outside diameter and a 3 mm (⅛ in.) wall thickness
(2) By sealed 13 mm (½ in.) nominal diameter wrought-steel or wrought-iron pipe of standard weight where base-metal thermocouples are used
(3) By enclosure in protective tubes of such materials and dimensions that the time constant of the protected thermocouple assembly lies within a range of 5.0 minutes to 7.2 minutes

4.2.1.2 The exposed length of the thermocouple protection tube in the furnace chamber shall be not less than 305 mm (12 in.).

4.2.1.3 The junction of the thermocouples shall be 152 mm (6 in.) from the exposed face of the fire door assembly or from the test wall in which the assembly is installed.

4.2.2 The furnace temperature shall be measured and recorded at intervals not exceeding 1 minute during the fire test.

4.2.3 The furnace temperature shall be controlled so that the area under the temperature–time curve, obtained by averaging the results from the furnace temperature readings, is within the following percentages of the corresponding area under the standard temperature–time curve shown in Figure 4.1.1, where t is time in minutes:

(1) 15 percent for $5 < t \leq 10$
(2) $(15 - 0.5\,[t - 10])$ percent for $10 < t \leq 30$
(3) $(5 - 0.083\,[t - 30])$ percent for $30 < t \leq 60$
(4) 2.5 percent for $t > 60$

Copyright National Fire Protection Association
Provided by IHS under license with NFPA
No reproduction or networking permitted without license from IHS
Not for Resale

4.2.4 At any time after the first 10 minutes of the test, the temperature recorded by any thermocouple in the furnace shall not differ from the corresponding temperature of the standard temperature–time curve by more than 100°C (212°F).

4.3 Unexposed Surface Temperatures. Temperatures of the unexposed surface of the fire door shall be recorded during the first 30 minutes of the fire test and shall be determined in accordance with 4.3.1 through 4.3.3.

4.3.1 Unexposed surface temperatures shall be measured at not fewer than three points on the door surface, with at least one thermocouple for each 1.5 m^2 (16 ft^2) of the door.

4.3.1.1 Thermocouples shall not be located over reinforcements extending through the door, over vision panels, or within 305 mm (12 in.) of the edge of the door.

4.3.2 Unexposed surface temperatures shall be measured with thermocouples placed under thermocouple pads that meet the requirements specified in 4.3.4.

4.3.2.1 The pads shall be held against the surface of the door.

4.3.2.2 The thermocouple leads shall be positioned under each pad for a length of not less than 89 mm (3½ in.), with the hot junction under the center of each pad.

4.3.2.3 The thermocouple leads under each pad shall not be heavier than 0.82 mm^2 (18 AWG) and shall be electrically insulated with heat-resistant and moisture-resistant coatings.

4.3.3 Unexposed surface temperatures shall be measured at intervals not exceeding 1 minute.

4.3.4 Thermocouple pads shall meet the following requirements or otherwise shall be demonstrated to be equivalent by comparative tests in accordance with NFPA 251, *Standard Methods of Tests of Fire Resistance of Building Construction and Materials*:

(1) Length and width, 152 mm ± 3.2 mm (6 in. ± ⅛ in.)
(2) Thickness, 10.2 mm ± 1.3 mm (0.04 in. ± 0.05 in.)
(3) Thermal conductivity [at 65°C (150°F)], 0.55 ± 0.0039 W/m·K (0.38 ± 0.027 Btu·in./hr·ft^2·°F)

Chapter 5 Fire Door Assembly

5.1 Construction and Size.

5.1.1 The design, construction, materials, workmanship, hardware, and size of the fire door assembly, which can consist of single doors, doors in pairs, special-purpose doors (e.g., Dutch doors, double-egress doors), or multisection doors, shall represent those for which a fire protection rating is desired.

5.1.2 A floor structure shall be provided as part of the opening in the test wall.

5.1.2.1 The floor structure shall be of noncombustible material and shall project into the furnace for a distance that is not less than twice the thickness of the fire door or to the limit of the frame, whichever is greater.

5.1.2.2 A floor structure shall not be required to be part of the opening in the test wall where the floor structure interferes with the operation of the door.

5.2 Mounting.

5.2.1 Swinging doors shall be mounted to swing into the furnace chamber.

5.2.2 Sliding and rolling doors shall be mounted on the exposed side of the opening in the test wall that encloses the furnace chamber.

5.2.3 Slide-type elevator doors shall be permitted to be mounted on the unexposed side of the opening in the test wall that encloses the furnace chamber.

5.2.4 Access-type door assemblies and chute-type door assemblies shall be mounted with one door arranged to swing into the furnace chamber and another door arranged to swing away from the furnace chamber.

5.2.5 Dumbwaiter doors and service-counter doors shall be mounted on the exposed side of the opening in the test wall that encloses the furnace chamber.

5.2.6 Door frames shall be evaluated when mounted to verify that the doors open either away from or into the furnace chamber, at the discretion of the testing authority, to obtain representative information on the performance of the construction under test.

5.2.7 Surface-mounted hardware (fire-exit devices) for use on fire doors shall be evaluated under conditions where it is installed on one door arranged to swing into the furnace chamber and on another door arranged to swing away from the furnace chamber.

5.2.8 The fire door assembly shall be installed in the test wall opening in the manner in which it is intended to be used.

5.2.8.1 Such mounting as described in 5.2.7 shall not prevent unrestricted operation of the fire door.

5.2.8.2 Clearances shall be provided in accordance with Section 5.3.

5.3 Clearances.

5.3.1 Clearances for swinging doors installed in the test wall opening shall be permitted to have a tolerance up to –1.6 mm (–1/16 in.) as follows:

(1) 3 mm (⅛ in.) along the top
(2) 3 mm (⅛ in.) along the hinge and latch jambs
(3) 3 mm (⅛ in.) along the meeting edges of doors in pairs
(4) 10 mm (⅜ in.) at the bottom edge of a single swinging door
(5) 6 mm (¼ in.) at the bottom edge of a pair of doors

5.3.2 Clearances for horizontal sliding doors installed in the test wall opening and not mounted within guides shall be as follows with a –3 mm (–⅛ in.) tolerance:

(1) 13 mm (½ in.) between the door and the test wall surfaces
(2) 10 mm (⅜ in.) between the door and the floor structure
(3) 6 mm (¼ in.) between the meeting edges of center-parting doors

5.3.2.1 A maximum overlap of 102 mm (4 in.) of the door over the test wall opening at the sides and top shall be provided.

5.3.3 Clearances for vertical sliding doors installed in the test wall opening and mounted within guides shall be as follows with a –3 mm (–⅛ in.) tolerance:

(1) 13 mm (½ in.) between the door and the test wall surfaces along the top or bottom door edges, or both, with guides mounted directly to the wall surface
(2) 5 mm (3/16 in.) between the meeting edges of biparting doors
(3) 5 mm (3/16 in.) between the door and the floor structure

Copyright National Fire Protection Association
Provided by IHS under license with NFPA
No reproduction or networking permitted without license from IHS
Not for Resale

5.3.4 Clearances for horizontal slide-type elevator doors installed in the test wall opening shall be as follows with a –3 mm (–⅛ in.) tolerance:

(1) 10 mm (⅜ in.) between the door and the test wall surfaces
(2) 10 mm (⅜ in.) between multisection door panels
(3) 10 mm (⅜ in.) at the bottom edge of a panel

5.3.4.1 Multisection door panels shall overlap 19 mm (¾ in.).

5.3.4.2 Door panels shall overlap the test wall opening 19 mm (¾ in.) at sides and top.

5.4 Test Wall.

5.4.1 The test wall in which the fire door assembly is mounted and tested shall have the strength and fire resistance to retain the assembly throughout the fire and hose stream tests.

5.4.2 The test wall shall be constructed of materials representative of the wall construction in which the fire door assembly is intended to be installed.

5.4.3 When used, wall anchors shall be compatible with the test wall in which the fire door assembly is installed.

Chapter 6 Conduct of Tests

6.1 Fire Test.

6.1.1 Duration. The fire test shall be conducted until the desired fire protection rating period is reached or until failure to meet any of the performance criteria specified in Chapter 7 occurs.

6.1.2 Furnace Pressure. The vertical pressure distribution within the furnace shall be measured and controlled in accordance with 6.1.2.1 through 6.1.2.8.

6.1.2.1 The vertical pressure distribution within the furnace shall be measured by at least two pressure-sensing probes separated by a minimum vertical distance of 1.8 m (6 ft) inside the furnace.

6.1.2.2 A calculation of the neutral pressure plane (zero differential pressure) location shall be made based on the vertical separation and pressure differences between the pressure-sensing probes.

6.1.2.3 The pressure-sensing probes shall be as shown in either Figure 6.1.2.3(a) or Figure 6.1.2.3(b).

6.1.2.4 The pressure-sensing probes shall be located within 152 mm (6 in.) of the vertical centerline of the furnace opening.

6.1.2.5 The pressure at each location shall be measured using a differential pressure instrument capable of reading in graduated increments no larger than 5 Pa (0.01 in. wg) with a precision of not more than +1.25 Pa (+0.005 in. wg).

6.1.2.6 The differential pressure measurement instrument shall be located to minimize stack effects caused by vertical runs of pressure tubing between the pressure-sensing probes and the differential pressure measurement instrument locations.

6.1.2.7 Control of the furnace pressure shall be established beginning no later than 5 minutes after the start of the test and shall be maintained throughout the remainder of the fire test period.

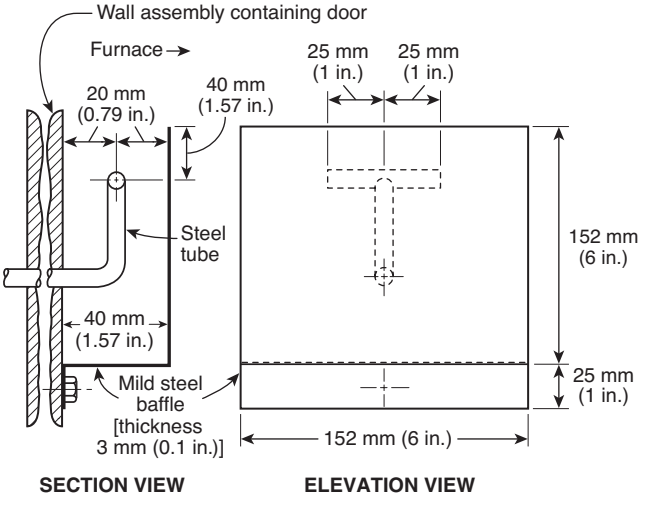

FIGURE 6.1.2.3(a) Static Pressure-Sensing Probe Dimensions.

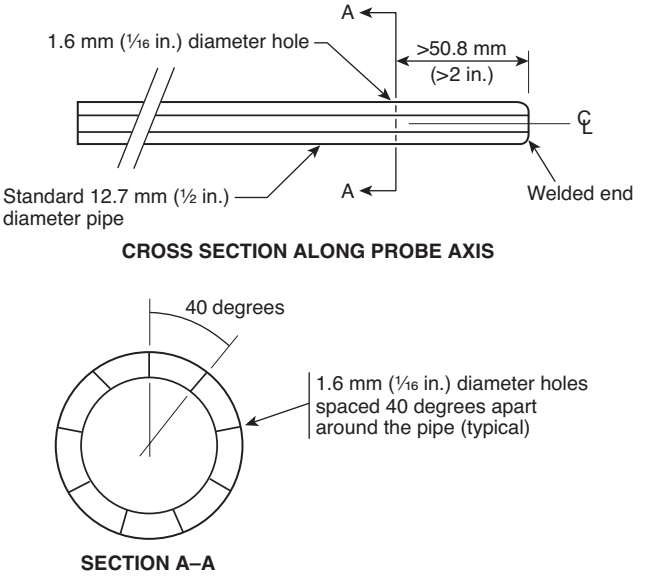

FIGURE 6.1.2.3(b) Pressure-Sensing Probe.

6.1.2.7.1 When the fire test is to be conducted under positive pressure, the neutral pressure plane in the furnace shall be established at 1016 mm (40 in.) or less above the bottom of the door.

6.1.2.7.2 When the fire test is to be conducted so that the furnace pressure is as close to neutral as possible, the neutral pressure plane shall be established at the top of the door ±25 mm (±1 in.).

6.1.2.8 The furnace pressure shall be measured and recorded throughout the fire test at intervals not exceeding 1 minute.

6.2 Hose Stream Test.

6.2.1* Within the 2 minutes immediately following the fire test, the fire-exposed side of the fire door assembly shall be subjected to the impact, erosion, and cooling effects of a standard hose stream, unless otherwise permitted by 6.2.2.

Copyright National Fire Protection Association
Provided by IHS under license with NFPA
No reproduction or networking permitted without license from IHS
Not for Resale

6.2.2* For 20-minute fire protection–rated fire door assemblies, at the option of the test sponsor, the hose stream test shall not be required to be performed.

6.2.3 The test equipment and test procedures for conducting the hose stream test shall be as described in ASTM E 2226, *Standard Practice for Application of Hose Stream*.

6.2.4 The water pressure and duration of application shall be as specified in Table 6.2.4.

Table 6.2.4 Water Pressure at Base of Play Pipe and Application for Hose Stream

	Water Pressure at Base of Play Pipe		Application for Exposed Area	
Desired Rating	**kPa**	**psi**	**sec/m^2**	**sec/ft^2**
3 hr and over	310	45	32	3.0
1½ hr and over and less than 3 hr	207	30	16	1.5
1 hr and over and less than 1½ hr	207	30	10	0.9
Less than 1 hr	207	30	6	0.6

6.2.5 If the required duration of the hose stream test has not been reached after this procedure has been performed, the procedure shall then be reversed and followed until the required duration has been met.

6.2.6* Exposed Area.

6.2.6.1 The hose stream shall be applied over the exposed area of the fire door assembly in accordance with the criteria specified in Table 6.2.4.

6.2.6.2 The exposed area shall be calculated using the outside dimensions of the fire door assembly including the door frames.

Chapter 7 Performance Criteria

7.1 General.

7.1.1 The fire door assembly shall meet the performance criteria specified in this chapter during both the fire test and the hose stream test unless otherwise indicated.

7.1.2 The fire door assembly shall remain in the test wall opening.

7.1.3 The fire door assembly shall not develop any openings in the door assembly, except as permitted by 7.1.3.1 through 7.1.3.4.

7.1.3.1 Openings created by glazing material breakage in the central area of each individual glazed light in any vision panel shall not exceed 5 percent of the area of the glazed light during the hose stream test.

7.1.3.2 Openings created by separation of the glazing material edges from the glazing frame due to movement away from the frame shall not exceed 30 percent of each individual glazed light perimeter during the hose stream test.

7.1.3.3 Separation shall be permitted between meeting edges of pairs of doors in accordance with 7.3.1, 7.3.4, and 7.3.10.

7.1.3.4 Clearances shall be permitted at the bottom edges of doors in accordance with 7.3.1 through 7.3.4.

7.1.4 No flaming shall occur on the unexposed surface of the door assembly during the first 30 minutes of the fire test, except that intermittent flames not greater than 152 mm (6 in.) in length shall be permitted to occur for periods not to exceed 10 seconds.

7.1.5 After 30 minutes of the fire test, some intermittent flames not greater than 152 mm (6 in.) in length shall be permitted to occur along the edges of doors for periods not to exceed 5 minutes.

7.1.6 For doors having a fire test duration of 45 minutes or greater, flames not greater than 152 mm (6 in.) in length shall be permitted to occur on the unexposed surface area of the door during the last 15 minutes of the fire test, provided that the flames are contained within a distance of 38 mm (1½ in.) from a vertical door edge, within 76 mm (3 in.) from the top edge of the door, and within 76 mm (3 in.) from the top edge of the frame of a vision panel.

7.1.7 Hardware.

7.1.7.1 Where hardware is evaluated for use on fire doors, it shall keep the door in the closed position for a fire test duration of not less than 3 hours, and the latch bolt shall remain projected and intact.

7.1.7.2 The hardware shall not be required to be operable following the tests.

7.2 Swinging Doors.

7.2.1 For swinging doors, any portion of the edges adjacent to the door frame shall not move from its original position in a direction perpendicular to the plane of the doors for a distance greater than the door thickness during the fire test or greater than 1½ times the door thickness during the hose stream test.

7.2.2 For swinging doors mounted in pairs, any portion of the meeting edges of each of the doors shall not move from its original position in a direction perpendicular to the plane of the doors for a distance greater than the door thickness away from the adjacent door edge.

7.2.3 Swinging doors mounted in pairs, incorporating an astragal, shall not separate in a direction parallel to the plane of the doors by more than 19 mm (¾ in.) along the meeting edges or a distance equal to the throw of the latch bolt at the latch location.

7.2.4 Swinging doors mounted in pairs, without an overlapping astragal, for a fire test duration of 1½ hours or less, shall not separate along the meeting edges by more than 10 mm (⅜ in.).

7.2.5 A single swinging door shall not separate from the door frame by more than 13 mm (½ in.) at the latch location.

7.2.6 Door frames to be evaluated with doors shall remain fastened to the test wall on all sides and shall not develop openings between the frame and the doors or between the frame and the adjacent test wall.

7.3 Sliding Doors.

7.3.1 Sliding doors mounted on the face of the test wall shall not move away from the wall more than 73 mm (2⅞ in.).

Copyright National Fire Protection Association
Provided by IHS under license with NFPA
No reproduction or networking permitted without license from IHS
Not for Resale

7.3.2 Sliding doors mounted in guides shall not release from the guides, and the guides shall not loosen from the fastenings.

7.3.3 The bottom bar of rolling steel doors shall not separate from the floor structure by more than 19 mm (¾ in.).

7.3.4 The meeting edges of center-parting horizontal sliding doors and biparting vertical sliding doors shall not separate from each other by a distance greater than the door thickness measured in a direction perpendicular to the plane of the doors.

7.3.5 The meeting edges of center-parting horizontal sliding doors and biparting vertical sliding doors, without an overlapping astragal, for a fire test duration of 1½ hours or less, shall not separate from each other in a direction parallel to the plane of the doors by more than 10 mm (⅜ in.).

7.3.6 The meeting edges of center-parting horizontal sliding doors, incorporating an astragal, shall not separate from each other in a direction parallel to the plane of the doors by more than 19 mm (¾ in.) or a distance equal to the throw of the latch bolt at the latch location.

7.3.7 The bottom edge of service-counter doors or single-slide dumbwaiter doors shall not separate from the sill by more than 10 mm (⅜ in.).

7.3.8 Astragal.

7.3.8.1 A resilient astragal, where provided, shall not develop openings during the fire test.

7.3.8.2 Not more than 5 percent of the area of the astragal shall be permitted to develop openings during the hose stream test.

7.3.9 The lap edges of horizontal slide-type elevator doors, including the lap edges of multisection doors, shall not move from the test wall or adjacent door surfaces so as to develop a separation of more than 73 mm (2⅞ in.).

7.3.10 The meeting edges of center-parting horizontal slide-type elevator door assemblies, for a fire test duration of 1½ hours or less, shall not separate from each other by more than 32 mm (1¼ in.) as measured in any horizontal plane.

Chapter 8 Report

8.1 Results.

8.1.1 Results shall be reported in accordance with the performance of the fire door assembly subjected to the tests as prescribed in these test methods.

8.1.2 The report shall include, but shall not be limited to, the following information:

(1) A description of the construction details and materials used to construct the test wall in which the fire door assembly is mounted for testing
(2) The temperature measurements of the fire test furnace plotted on a comparative graph showing the standard temperature–time curve
(3) The temperature measurements of the unexposed surface of the fire door assembly
(4) The pressure differential measurements made between the furnace and the unexposed side of the fire door assembly and the calculation that determines the position of the neutral pressure plane with respect to the bottom of the fire door assembly during the fire test
(5) All observations of the reactions of the fire door assembly that have an influence on its performance during both the fire and hose stream tests
(6) Flaming on the unexposed surface of the door or passing through the fire door assembly
(7) The magnitude and direction of the movement of any portion of the edges of the door from the original position
(8) A description of the fire door assembly, including fasteners and attachments and other hardware, as they appear after the fire test and the hose stream test
(9) The materials and construction of the fire door assembly, details of installation including hardware, door frame, and wall anchors, hangers, guides, trim, finish, and clearance or lap, in order to ensure positive identification and duplication of the fire door assembly in all respects
(10) The actual duration of the fire test

8.1.3 The fire protection rating of the fire door assembly that successfully meets the performance criteria specified in Chapter 7 shall also be reported.

8.1.3.1 The fire protection rating shall be based on and shall not be greater than the duration of the fire test and shall be assigned in accordance with one of the following:

(1) 20 minutes
(2) 30 minutes
(3) ¾ hour
(4) 1 hour
(5) 1½ hours
(6) 3 hours
(7) Hourly increments for ratings over 3 hours

8.1.3.2 Where the fire protection rating is 30 minutes or longer, a correction shall be applied for variation of the furnace exposure time from that prescribed in 4.2.3 in those cases where it affects the fire protection rating.

8.1.3.2.1 The correction described in 8.1.3.2 shall be done by multiplying the indicated duration by two-thirds of the difference in area between the curve of the average furnace temperature and the standard temperature–time curve for the first three-fourths of the test duration and then dividing the product by the difference in area between the standard temperature–time curve and a baseline of 20°C (68°F) for the same portion of the test, increasing the latter area by 30°C/hr (54°F/hr) [1800°C/min (3240°F/min)] to compensate for the thermal lag of the furnace thermocouples during the first part of the test.

8.1.3.2.2 For fire exposures in the test higher than the standard temperature–time curve, the indicated fire protection rating shall be increased by the amount of the correction and shall be decreased similarly for fire exposure below the standard temperature–time curve.

8.1.3.2.3 The correction shall be expressed by the following formula:

$$C = \frac{2I(A - A_s)}{3(A_s + L)}$$

where:
C = correction in the same unit as I
I = indicated fire protection rating
A = area under the curve of the indicated average furnace temperature for the first three-fourths of the indicated rating period

Copyright National Fire Protection Association
Provided by IHS under license with NFPA
No reproduction or networking permitted without license from IHS
Not for Resale

A_s = area under the standard temperature–time curve for the same part of the indicated fire protection rating

L = lag correction in the same units as A and A_s [30°C/hr (54°F/hr); or 1800°C/min (3240°F/min)]

8.1.4 The results of the hose stream test shall be documented.

Annex A Explanatory Material

Annex A is not a part of the requirements of this NFPA document but is included for informational purposes only. This annex contains explanatory material, numbered to correspond with the applicable text paragraphs.

A.4.1.1 See Table A.4.1.1 for times and temperatures that comprise the standard temperature–time curve for control of fire tests.

Table A.4.1.1 Standard Temperature–Time Curve for Control of Fire Tests

Time (hr:min)	Temperature °C	Area Above 20°C Base °C-min	°C-hr	Temperature °F	Area Above 68°F Base °F-min	°F-hr
0:00	20	0	0	68	0	0
0:05	538	1,290	22	1,000	2,330	39
0:10	704	4,300	72	1,300	7,740	129
0:15	760	7,860	131	1,399	14,150	236
0:20	795	11,650	194	1,462	20,970	350
0:25	821	15,590	260	1,510	28,050	468
0:30	843	19,650	328	1,550	35,360	589
0:35	862	23,810	397	1,584	42,860	714
0:40	878	28,060	468	1,613	50,510	842
0:45	892	32,390	540	1,638	58,300	971
0:50	905	36,780	613	1,661	66,200	1,103
0:55	916	41,230	687	1,681	74,220	1,237
1:00	927	45,740	762	1,700	82,330	1,372
1:05	937	50,300	838	1,718	90,540	1,509
1:10	946	54,910	915	1,735	98,830	1,647
1:15	955	59,560	993	1,750	107,200	1,787
1:20	963	64,250	1,071	1,765	115,650	1,928
1:25	971	68,990	1,150	1,779	124,180	2,070
1:30	978	73,760	1,229	1,792	132,760	2,213
1:35	985	78,560	1,309	1,804	141,420	2,357
1:40	991	83,400	1,390	1,815	150,120	2,502
1:45	996	88,280	1,471	1,826	158,890	2,648
1:50	1,001	93,170	1,553	1,835	167,700	2,795
1:55	1,006	98,080	1,635	1,843	176,550	2,942
2:00	1,010	103,020	1,717	1,850	185,440	3,091
2:10	1,017	112,960	1,882	1,862	203,330	3,389
2:20	1,024	122,960	2,049	1,875	221,330	3,689
2:30	1,031	133,040	2,217	1,888	239,470	3,991
2:40	1,038	143,180	2,386	1,900	257,720	4,295
2:50	1,045	153,390	2,556	1,912	276,110	4,602
3:00	1,052	163,670	2,728	1,925	294,610	4,910
3:10	1,059	174,030	2,900	1,938	313,250	5,221
3:20	1,066	184,450	3,074	1,950	332,000	5,533
3:30	1,072	194,940	3,249	1,962	350,890	5,848
3:40	1,079	205,500	3,425	1,975	369,890	6,165
3:50	1,086	216,130	3,602	1,988	389,030	6,484
4:00	1,093	226,820	3,780	2,000	408,280	6,805
4:10	1,100	237,590	3,960	2,012	427,670	7,128
4:20	1,107	248,430	4,140	2,025	447,180	7,453
4:30	1,114	259,340	4,322	2,038	466,810	7,780

Copyright National Fire Protection Association
Provided by IHS under license with NFPA
No reproduction or networking permitted without license from IHS
Not for Resale

Table A.4.1.1 *Continued*

Time (hr:min)	Temperature °C	Area Above 20°C Base °C-min	Area Above 20°C Base °C-hr	Temperature °F	Area Above 68°F Base °F-min	Area Above 68°F Base °F-hr
4:40	1,121	270,310	4,505	2,050	486,560	8,110
4:50	1,128	281,360	4,689	2,062	506,450	8,441
5:00	1,135	292,470	4,874	2,075	526,450	8,774
5:10	1,142	303,660	5,061	2,088	546,580	9,110
5:20	1,149	314,910	5,248	2,100	566,840	9,447
5:30	1,156	326,240	5,437	2,112	587,220	9,787
5:40	1,163	337,630	5,627	2,125	607,730	10,129
5:50	1,170	349,090	5,818	2,138	628,360	10,473
6:00	1,177	360,620	6,010	2,150	649,120	10,819
6:10	1,184	372,230	6,204	2,162	670,000	11,167
6:20	1,191	383,900	6,398	2,175	691,010	11,517
6:30	1,198	395,640	6,594	2,188	712,140	11,869
6:40	1,204	407,450	6,791	2,200	733,400	12,223
6:50	1,211	419,330	6,989	2,212	754,780	12,580
7:00	1,218	431,270	7,188	2,225	776,290	12,938
7:10	1,225	443,290	7,388	2,238	797,920	13,299
7:20	1,232	455,380	7,590	2,250	819,680	13,661
7:30	1,239	467,540	7,792	2,262	841,560	14,026
7:40	1,246	479,760	7,996	2,275	863,570	14,393
7:50	1,253	492,060	8,201	2,288	885,700	14,762
8:00	1,260	504,420	8,407	2,300	907,960	15,133

A.6.2.1 Additional information on the hose stream application can be found in Section B.13.

A.6.2.2 The elimination of the hose stream test for some 20-minute-rated assemblies is based on their field application.

A.6.2.6 In Table 6.2.4, the exposed area is permitted to be calculated using the outside dimensions of the test specimen, including a frame, hangers, tracks, or other parts of the assembly, if provided, but normally not including the wall into which the specimen is mounted. Where multiple test specimens are mounted in the same wall, the rectangular or square wall area encompassing all of the specimens is considered the exposed area, since the hose stream has to traverse this area during its application.

Annex B Commentary

This annex is not a part of the requirements of this NFPA document but is included for informational purposes only.

B.1 Introduction. This commentary has been prepared to provide the user of NFPA 252 with background information on the development of the standard and its application in the fire protection of buildings. It also provides guidance in the planning and performance of fire tests and in the reporting of results. No attempt has been made to incorporate all of the available information on fire testing in this commentary. The serious student of fire testing is strongly urged to examine the referenced documents for a better appreciation of the history of fire-resistant design and the intricate problems associated with testing and with interpretation of test results.

B.2 Application.

B.2.1 Compartmentation of buildings by fire-resistive walls has been recognized for many years as an effective method of restricting fires to their area of origin [1–7] or limiting their spread. The functional use of buildings, however, demands a reasonable amount of communication between compartments, necessitating openings in these fire-resistive walls. Fire door assemblies are utilized to protect these openings and maintain the integrity of the fire barrier [8]. Openings in walls have been traditionally classified by fire protection standards [6, 9, 10] and building codes in accordance with the location and purpose of the wall in which the opening exists. However, such classifications were deleted from these standards and codes in the early 1990s. Instead, these standards and codes specify the fire protection rating of the door assembly required to protect the openings.

B.2.2 Fire protection standards and building codes permit labeled vision panels and other openings such as labeled ventilation louvers in some fire door assemblies. The model building codes, NFPA 80, *Standard for Fire Doors and Other Opening Protectives* [6], and the specific fire door manufacturer's listing should be referenced for information on the types and sizes of these openings.

B.2.3 Fire door assemblies should be properly installed to maintain their fire protection rating. NFPA 80, *Standard for Fire Doors and Other Opening Protectives* [6], and the specific fire door manufacturer's listing should be consulted for details on the installation of fire door assemblies and for limitations on the application of specific labeled fire doors.

B.3 Historical Aspects. The first effort to test fire doors was reported in a series of tests conducted in Germany in 1893 [11–13].

Copyright National Fire Protection Association
Provided by IHS under license with NFPA
No reproduction or networking permitted without license from IHS
Not for Resale

The British Fire Prevention Committee began testing in 1899 and produced a Standard Table of Fire Resisting Elements, including Fire Resisting Doors [1]. Underwriters Laboratories Inc. was involved in testing and listing fire doors shortly after 1900, using its own standards. In 1941, ASTM adopted ASTM E 152, *Standard Methods of Fire Tests of Door Assemblies*, on fire door assembly tests. NFPA 252 was first issued by the NFPA in 1942.

B.4 Scope and Significance.

B.4.1 NFPA 252 provides methods for measuring the relative performance of fire door assemblies where exposed to predetermined standard fire conditions. This standard provides for testing of several types and methods of door operation including swinging, sliding, rolling, and sectional doors [6]. Since the effectiveness of the opening protection is dependent upon the entire assembly, proper attention should be paid to the installation as a unit. Accordingly, fire door assemblies are required to be tested as an assembly of all necessary elements and equipment, including the door frame, hardware, and any glazing or other openings in the assembly.

B.4.2 Fire protection ratings are assigned to indicate that the fire door assembly has continued to perform as required for periods of ⅓ hour, ½ hour, ¾ hour, 1 hour, 1½ hours, or 3 or more hours. Labels on assemblies formerly carried the letter designations of A, B, C, D, or E. These letter designations were not a part of the NFPA 252 standard classification system but were used to designate the class of opening for which the door was intended to protect as determined by codes and other standards [6, 9].

B.4.3 The ⅓-hour, or 20-minute, fire protection–rated door is relatively new. Concern about the uniform adequacy of the 44.7 mm (1¾ in.) solid bonded wood core door construction and the difficulty of determining the equivalency of other types of doors led to a voluntary consensus to test such doors for 20 minutes in the test furnace described in this standard using the same acceptance criteria specified for door assemblies traditionally tested for longer periods of time, with the exception that the hose stream test required by this test method might not be required by regulatory codes.

B.4.4 It is common for a fire door to have a fire protection rating lower than the wall fire resistance rating in which it is installed. For example, a 1½-hour fire protection–rated door can be required in a wall having a fire resistance rating of 2 hours. This is justified in part by the fact that, under normal conditions of use, the potential fire exposure in the vicinity of a door opening is decreased, since there will usually be a clear space on both sides of the opening for traffic purposes. Since wall assemblies are put together at the site, their uniformity is not as certain as a fire door assembly that is factory assembled (e.g., undesigned penetrations tend to show up in wall assemblies). For this reason, any factor of safety that is tacitly called for in a wall assembly requirement should exceed that of a door assembly. If the opening is not used, combustibles could be piled against the door, and the assumed enclosure protection might not be maintained. In these instances, ratings for the openings should be equivalent to the rating of the wall, or precautions should be taken to prevent storage of combustibles against the doors [2, 6].

B.5 Limitations.

B.5.1 The NFPA 252 test methods are intended for the door to be tested until the performance criteria are met for the desired exposure period or for a shorter period. The test methods are not intended to determine that a fire door subjected to a building fire is satisfactory for use following the fire.

B.5.2 The variations in material performance preclude any prediction of an assembly's performance in walls other than those types used in the test. The standard also makes no provisions for measuring the generation of smoke and gases or other products of combustion from the unexposed side of the door. Temperature measurements on the unexposed surface of the door are stopped after 30 minutes.

B.6 Furnace.

B.6.1 The test methods provide details on the operation characteristics and temperature-measurement requirements of the test furnace. The walls of the furnace typically should be of furnace refractory materials and should be sufficiently rugged to maintain the overall integrity of the furnace during the fire exposure period.

B.6.2 The thermocouples in the furnace are located 152 mm (6 in.) from the face of the door or the wall in which the door is installed. Otherwise, no furnace depth is specified. A depth of 203 mm to 457 mm (8 in. to 18 in.) is considered desirable by most laboratories. Reference documents should be consulted for a more comprehensive review of furnace design and performance [14, 15].

B.7 Temperature–Time Curve.

B.7.1 A specific temperature–time relationship for the test fire is defined in the standard. The actual recorded temperature–time condition obtained in the furnace is required to be within specified percentages of those of the standard curve. The number and type of temperature-measuring devices are outlined in the standard. Specific standard practices for location and use of these temperature-measuring devices are also outlined in the standard.

B.7.2 The standard temperature–time (T–t) curve used in NFPA 252 represents a severe building fire [3]. The curve was adopted in 1918 as a result of several conferences by 11 technical organizations, including testing laboratories, insurance underwriters, fire protection associations, and technical societies [7, 10, 16]. It should be recognized that the T–t relationship of these test methods represents only one real fire situation [7, 16–27].

B.8 Furnace Control. The standard contains specific instruction for measuring temperatures in the furnace and for selection of the required thermocouples. Thermocouples of the design specified are sufficiently rugged to retain accuracy throughout anticipated test periods. However, their massive construction causes a significant delay in their response to temperature change and results in temperatures exceeding the indicated temperatures during the early stages of the test period when the temperature rises rapidly. The iron or porcelain tubes surrounding the junction and leads of the thermocouple provide a shield against degradation of the junction and increase the thermal inertia. It is customary for laboratories to replace furnace thermocouples after three or four accumulated hours of use.

B.9 Unexposed Surface Temperature.

B.9.1 Conditions of acceptance for fire-resistive walls specify that the temperature increase on the unexposed surface of the wall not exceed an average of 140°C (250°F) above ambient and that there be no passage of flames or gases hot enough to ignite combustibles. It is obvious that the necessity of maintaining some clearances for efficient operation of the door

Copyright National Fire Protection Association
Provided by IHS under license with NFPA
No reproduction or networking permitted without license from IHS
Not for Resale

and the possibility of warping preclude any attempt to restrict escape of gases and minor flames on the periphery of doors.

B.9.2 The standard describes a standard procedure for measuring the unexposed surface temperatures. However, unexposed surface temperatures are not a mandatory performance criterion for NFPA 252. Building regulations do restrict temperature transmission for some wall-opening protectives [6, 9]. For instance, it is usual for codes to limit the temperature rise on the unexposed side of fire doors protecting exit stairways to 250°C (450°F) during the first 30 minutes of the test. This criterion assumes that a higher temperature would provide enough radiant heat to discourage, if not prevent, occupants from passing by the door during an emergency. It is current practice for testing laboratories to provide labels on fire doors indicating that the maximum transmitted temperature on the unexposed side is 140°C, 250°C, or 361°C (250°F, 450°F, or 650°F) above ambient. If not indicated on the label, the temperature rise during the first 30 minutes might or might not be in excess of 361°C (650°F). Temperature rise on the unexposed side of glass panels and louvers is not measured.

B.10 Test Assemblies.

B.10.1 NFPA 252 provides a relative measure of performance for door assemblies. In order to establish confidence that the tested doors will perform in a building as expected, the tested assembly and its installation in the test frame need to be representative of actual use conditions. Therefore, NFPA 80, *Standard for Fire Doors and Other Opening Protectives* [6], or other such standards or specifications should be consulted before testing an assembly.

B.10.2 The standard provides additional minimum requirements including direction of door swing, location in relation to the exposed side of the wall, and specific clearance between the door and its frame or wall, or both. Regardless of other specifications, these instructions should be followed in order to make a comparative judgment on test results.

B.11 Conduct of Tests. The test frame or wall in which a door assembly is installed should be rugged enough to endure exposure to the fire during the specified period without affecting the door assembly. Traditionally, this wall has been of masonry construction. Fire doors are currently installed in walls other than masonry and have been tested in walls framed with metal and wood studs covered with a number of materials.

B.12 Furnace Pressures.

B.12.1 A fire in a building compartment creates both negative and positive pressures on door assemblies depending on atmospheric conditions, height of the compartment above ground, wind conditions, and ventilation of the compartment at the start of and during the fire.

B.12.2 In the past, NFPA 252 specified that the pressure in the furnace be maintained as nearly equal to atmospheric pressure as possible. This method of test generally resulted in the test assembly being subjected to a negative pressure during the test, since most laboratories set the neutral pressure plane in the furnace at or above the top of the assembly. As revised, the standard permits tests to be conducted under either positive or negative pressure, depending on the needs and requirements of the manufacturer, test laboratory, or the authority having jurisdiction. For positive pressure, the neutral pressure plane is set at a 1016 mm (40 in.) height, whereas for negative (nearly neutral) pressure it is set at the top of the door. The pressure in the furnace is required to be controlled, measured, and reported.

B.13 Hose Stream Test. Immediately following a fire test, the test frame is removed from the furnace, and the door assembly is subjected to the impact, erosion, and cooling effects of a stream of water from a 63.7 mm (2½ in.) hose discharging through a standard play pipe equipped with a 28.7 mm (1⅛ in.) tip under specified pressures. Just as the standard fire exposure is not intended to be representative of any or all actual fire conditions, the standard hose stream exposure is not intended to be representative of any actual fire-fighting or fire suppression activity. The fire exposure test and the hose stream test provide a relative measure of the performance of constructions and assemblies under specified, standard exposure conditions.

The hose stream test provides a method for evaluating the integrity of constructions and assemblies and eliminating inadequate materials or constructions. The cooling, impact, and erosion effects of the hose stream provide important tests of the integrity of the specimen being evaluated.

The rapid cooling and thermal shock imposed by the hose stream test following the fire exposure test eliminates materials that are subject to failure under such conditions. The orthogonal load imposed by the hose stream subjects vertical specimens to a load in a direction perpendicular to the normal dead load of the specimen. This effect eliminates construction or assemblies with marginal factors of safety for structural loading. The erosion effects of the hose stream might remove char formed during the standard fire exposure that provides minimal contribution to the structural strength of the assembly.

The hose stream test provides a real and measurable load on the specimen. Testing by Ingberg at the National Bureau of Standards reported that the standard hose stream test produced a 26.4 kg (57.2 lb) force on the specimen.

The combined effects of the hose stream test provide a method for screening the integrity of a specimen that cannot be achieved by any other means.

B.14 Performance Criteria. The standard provides a specific set of conditions by which the performance of the door is measured, the most important condition being that the door remain in place during both the fire test and the hose stream test. The standard also restricts flaming on the unexposed surface and prohibits through-openings during both the fire test and the hose stream test. Specific limitations on the movement of the door during the tests are given for different types of doors such as side-hinged swinging and sliding doors.

B.15 References.

(1) Bird, E. L., and S. J. Docking. *Fire in Buildings,* D. Van-Nostrand Co., Inc., New York, 1949.
(2) Ferguson, R. S. "Principles of Fire Protection," National Building Code of Canada Technical Paper No. 272, Division of Building Research, National Research Council of Canada, Ottawa, March 1970.
(3) Gordon, C. "Considerations of Life Safety and Building Use," DBR Paper No. 699, Division of Building Research, National Research Council of Canada, Ottawa, January 1977.
(4) Gross, D. "Field Burnout Tests of Apartment Dwelling Units," Building Science Series 10, U.S. Dept. of Commerce, National Bureau of Standards, September 29, 1967.

Copyright National Fire Protection Association
Provided by IHS under license with NFPA
No reproduction or networking permitted without license from IHS
Not for Resale

(5) Law, M. "Radiation from Fires in a Compartment," Fire Research Technical Paper No. 20, Her Majesty's Stationery Office, London, 1968.
(6) NFPA 80, *Standard for Fire Doors and Other Opening Protectives*, National Fire Protection Association, 2007.
(7) Harmathy, T. Z. "Designer's Option: Fire Resistance or Ventilation," Technical Paper No. 436, Division of Building Research, National Research Council of Canada, Ottawa, NRCC 14746, 1974.
(8) Shoub, H., and D. Gross. "Doors as Barriers to Fire and Smoke," Building Science Series 3, U.S. Dept. of Commerce, National Bureau of Standards, March 25, 1966.
(9) *NFPA 5000®, Building Construction and Safety Code®* National Fire Protection Association, 2006.
(10) *Fire Protection Handbook™*, Nineteenth Edition, National Fire Protection Association, 2003.
(11) Shoub, H. "Early History of Fire Endurance Testing in the United States," Symposium on Fire Test Methods, ASTM STP 301, American Society of Testing and Materials, 1961.
(12) Konicek, L. and T. T. Lie. "Temperature Tables for Ventilation Controlled Fires," Building Research Note No. 94, National Research Council of Canada, September 1974.
(13) Babrauskas, V., and R. B. Williamson. "The Historical Basis of Fire Resistance Testing," Part I and Part II, *Fire Technology,* Vol. 14, No. 5 and No. 6, August and November 1978, pp. 186–194, 306–316.
(14) Seigel, L. G. "Effects of Furnace Design on Fire Endurance Test Results," Fire Test Performance, ASTM STP 464, American Society of Testing and Materials, 1970, pp. 56–67.
(15) Harmathy, T. Z. "Design of Fire Test Furnaces," *Fire Technology,* Vol. 5, No. 2, May 1969, pp. 146–150.
(16) Seigel, L. G. "The Severity of Fires in Steel-Framed Buildings," Symposium No. 2, Her Majesty's Stationery Office, 1968, London. Proceedings of the Symposium held at the Fire Research Station, Borehamwood, Herts (England), January 1967.
(17) Odeen, K. "Theoretical Study of Fire Characteristics in Enclosed Spaces," Bulletin No. 10, Royal Institute of Technology, Division of Building Construction, Stockholm, 1965.
(18) Shorter, G. W. "The Fire Protection Engineer and Modern Building Design," *Fire Technology,* Vol. 4, No. 3, August 1968, pp. 206–213.
(19) Stone, R. "Danger — Flammable," *Wall Street Journal,* December 8, 1970.
(20) Ryan, J. E. "Assessment of Fire Hazards in Buildings," Ignition, Heat Release, and Noncombustibility of Materials, ASTM STP 502, American Society of Testing and Materials, 1972.
(21) Harmathy, T. Z. "Design Approach to Fire Safety in Buildings," *Progressive Architecture,* April 1974, pp. 84–87, National Research Council of Canada, Ottawa, NRCC 14076.
(22) Harmathy, T. Z. "A New Look at Compartment Fires," Part I and Part II, *Fire Technology,* Vol. 8, No. 3 and No. 4, August and November 1972, pp. 196–217, 326–351.
(23) Robertson, A. F., and D. Gross. "Fire Load, Fire Severity, and Fire Endurance," Fire Test Performances, ASTM STP 464, American Society of Testing and Materials, 1970.
(24) Ingberg, S. H., et al. "Combustible Contents in Buildings," National Bureau of Standards BMS 149, July 1957.
(25) Heselden, A. J. M. "Parameters Determining the Severity of Fire," Symposium No. 2, Her Majesty's Stationery Office, 1968, London. Proceedings of the Symposium held at the Fire Research Station, Borehamwood, Herts (England), January 1967.
(26) Gross, D., and A. F. Robertson. "Experimental Fires in Enclosures," Tenth Symposium (International) on Combustion, The Combustion Institute, 1965, pp. 931–942.
(27) Harmathy, T. Z. "Performance of Building Elements in Spreading Fire," DBR Paper No. 752, National Research Council of Canada, NRCC 16437, Fire Research, Vol. 1, 1977/1978, pp. 119–132.

Annex C Informational References

C.1 Referenced Publications. The documents or portions thereof listed in this annex are referenced within the informational sections of this standard and are not part of the requirements of this document unless also listed in Chapter 2 for other reasons.

C.1.1 NFPA Publications. National Fire Protection Association, 1 Batterymarch Park, Quincy, MA 02169-7471.

NFPA 80, *Standard for Fire Doors and Other Opening Protectives*, 2007 edition.

C.1.2 Other Publications.

C.1.2.1 ASTM Publications. ASTM International, 100 Barr Harbor Drive, P.O. Box C700, West Conshohocken, PA 19428-2959.

ASTM E 152, *Standard Methods of Fire Tests of Door Assemblies*, 1981.

C.2 Informational References. (Reserved)

C.3 References for Extracts in Informational Sections. (Reserved)

Copyright National Fire Protection Association
Provided by IHS under license with NFPA
No reproduction or networking permitted without license from IHS
Not for Resale

Index

Copyright © 2007 National Fire Protection Association. All Rights Reserved.

The copyright in this index is separate and distinct from the copyright in the document that it indexes. The licensing provisions set forth for the document are not applicable to this index. This index may not be reproduced in whole or in part by any means without the express written permission of NFPA.

-A-

Access-type doors 5.2.4
Application of standard 1.3, B.2
Astragals 7.2.3, 7.2.4, 7.3.6, 7.3.8

-C-

Chute-type doors 5.2.4
Commentary on standard ..... Annex B

-D-

Definitions ..... Chap. 3
Door assemblies (definition) ..... 3.3.1; *see also* Fire door assemblies
Doors, types of ..... 5.1.1, 5.2, B.4.1; *see also* Sliding doors; Swinging doors
Dumbwaiter doors 5.2.5, 7.3.7

-E-

Elevator doors 5.2.3, 5.3.4, 7.3.9, 7.3.10

-F-

Fire door assemblies ..... Chap. 5, B.10
Clearances 5.3
Construction and size 5.1
Definition 3.3.1.1
Installation B.2.3
Mounting 5.2
Fire-exit devices 5.2.7
Fire protection ratings ..... 8.1.3, B.4.2 to B.4.4
Fire test 6.1, 7.1.1
Control of ..... Chap. 4
Duration 6.1.1
Furnace pressure 6.1.2
Report ..... Chap. 8
Floor structures 5.1.2
Frames, evaluation of 5.2.6, 7.2.6
Furnace B.6
Furnace control B.8
Furnace pressures ..... 6.1.2, 8.1.2(4), B.12
Furnace temperatures ..... 4.2, 8.1.2(2), 8.1.2(3)

-G-

Glazing material 7.1.3.1

-H-

Hardware ..... 5.2.7, 7.1.7, 8.1.2(8), 8.1.2(9)
Historical aspects of standard B.3
Horizontal sliding doors ..... 5.3.2, 5.3.4, 7.3.4 to 7.3.6, 7.3.9, 7.3.10
Hose stream test .... 6.2, 7.1.1, 8.1.2(5), 8.1.4, A.6.2.1 to A.6.2.6, B.13

-I-

Installation B.2.3

-L-

Limitations of methods B.5

-O-

Openings 5.2.3, 5.2.5, 5.2.8, 7.1.2, 7.1.3, B.2.1, B.2.2
Definition 3.3.2

-P-

Performance criteria ..... Chap. 7, B.14
Purpose of standard 1.2

-R-

References ..... Chap. 2, B.15, Annex C
Report of test results ..... Chap. 8
Rolling doors 5.2.2, 7.3.3, B.4.1

-S-

Scope of standard 1.1, B.4
Sectional doors 5.1.1, 5.3.4.1, 7.3.9, B.4.1
Service-counter doors 5.2.5, 7.3.7
Shall (definition) 3.2.1
Should (definition) 3.2.2
Significance of methods B.4
Sliding doors ..... B.4.1; *see also* Horizontal sliding doors; Vertical sliding doors
Clearances ..... 5.3.2 to 5.3.4
Mounting 5.2.2, 5.2.3
Performance criteria 7.3
Standard (definition) 3.2.3
Swinging doors B.4.1
Clearances 5.3.1
Mounting 5.2.1
Performance criteria 7.2

-T-

Temperatures
Furnace ..... 4.2, 8.1.2(2), 8.1.2(3), 8.1.3.2.1, 8.1.3.2.3
Unexposed surface 4.3, B.9
Temperature–time curve ..... 4.1, Fig. 4.1.1, 8.1.2(2), 8.1.3.2.1 to 8.1.3.2.3, A.4.1.1, B.7
Tests, conduct of .... Chap. 6, B.11; *see also* Fire test; Hose stream test
Test walls ..... 5.4, 8.1.2(1); *see also* Openings
Thermocouple pads 4.3.2, 4.3.4

-U-

Unexposed surface temperatures 4.3, B.9

-V-

Ventilation louvers B.2.2
Vertical sliding doors 5.3.3, 7.3.4, 7.3.5
Vision panels 7.1.3.1, B.2.2
Definition 3.3.3

-W-

Walls, test ..... 5.4, 8.1.2(1); *see also* Openings

Copyright National Fire Protection Association
Provided by IHS under license with NFPA
No reproduction or networking permitted without license from IHS
Not for Resale

Sequence of Events Leading to Issuance of an NFPA Committee Document

Step 1: Call for Proposals

- Proposed new Document or new edition of an existing Document is entered into one of two yearly revision cycles, and a Call for Proposals is published.

Step 2: Report on Proposals (ROP)

- Committee meets to act on Proposals, to develop its own Proposals, and to prepare its Report.
- Committee votes by written ballot on Proposals. If two-thirds approve, Report goes forward. Lacking two-thirds approval, Report returns to Committee.
- Report on Proposals (ROP) is published for public review and comment.

Step 3: Report on Comments (ROC)

- Committee meets to act on Public Comments to develop its own Comments, and to prepare its report.
- Committee votes by written ballot on Comments. If two-thirds approve, Report goes forward. Lacking two-thirds approval, Report returns to Committee.
- Report on Comments (ROC) is published for public review.

Step 4: Technical Report Session

- "*Notices of intent to make a motion"* are filed, are reviewed, and valid motions are certified for presentation at the Technical Report Session. ("Consent Documents" that have no certified motions bypass the Technical Report Session and proceed to the Standards Council for issuance.)
- NFPA membership meets each June at the Annual Meeting Technical Report Session and acts on Technical Committee Reports (ROP and ROC) for Documents with "certified amending motions."
- Committee(s) vote on any amendments to Report approved at NFPA Annual Membership Meeting.

Step 5: Standards Council Issuance

- Notification of intent to file an appeal to the Standards Council on Association action must be filed within 20 days of the NFPA Annual Membership Meeting.
- Standards Council decides, based on all evidence, whether or not to issue Document or to take other action, including hearing any appeals.

Committee Membership Classifications

The following classifications apply to Technical Committee members and represent their principal interest in the activity of the committee.

M *Manufacturer:* A representative of a maker or marketer of a product, assembly, or system, or portion thereof, that is affected by the standard.

U *User:* A representative of an entity that is subject to the provisions of the standard or that voluntarily uses the standard.

I/M *Installer/Maintainer:* A representative of an entity that is in the business of installing or maintaining a product, assembly, or system affected by the standard.

L *Labor:* A labor representative or employee concerned with safety in the workplace.

R/T *Applied Research/Testing Laboratory:* A representative of an independent testing laboratory or independent applied research organization that promulgates and/or enforces standards.

E *Enforcing Authority:* A representative of an agency or an organization that promulgates and/or enforces standards.

I *Insurance:* A representative of an insurance company, broker, agent, bureau, or inspection agency.

C *Consumer:* A person who is, or represents, the ultimate purchaser of a product, system, or service affected by the standard, but who is not included in the *User* classification.

SE *Special Expert:* A person not representing any of the previous classifications, but who has a special expertise in the scope of the standard or portion thereof.

NOTES;
1. "Standard" connotes code, standard, recommended practice, or guide.
2. A representative includes an employee.
3. While these classifications will be used by the Standards Council to achieve a balance for Technical Committees, the Standards Council may determine that new classifications of members or unique interests need representation in order to foster the best possible committee deliberations on any project. In this connection, the Standards Council may make appointments as it deems appropriate in the public interest, such as the classification of "Utilities" in the National Electrical Code Committee.
4. Representatives of subsidiaries of any group are generally considered to have the same classification as the parent organization.

Copyright National Fire Protection Association
Provided by IHS under license with NFPA
No reproduction or networking permitted without license from IHS
Not for Resale

NFPA Technical Committee Document Proposal Form

NOTE: All Proposals must be received by 5:00 pm EST/EDST on the published Proposal Closing Date.

For further information on the standards-making process, please contact the Codes and Standards Administration at 617-984-7249 or visit www.nfpa.org/codes.

For technical assistance, please call NFPA at 1-888-344-3555.

FOR OFFICE USE ONLY

Log #:

Date Rec'd:

Please indicate in which format you wish to receive your ROP/ROC ☐ **electronic** ☐ **paper** ☒ **download**
(Note: If choosing the download option, you must view the ROP/ROC from our website; no copy will be sent to you.)

Date April 1, 200X **Name** John J. Doe **Tel. No.** 716-555-1234

Company Air Canada Pilot's Association

Street Address 123 Summer Street Lane **City** Lewiston **State** NY **Zip** 14092

Please indicate organization represented (if any)

1. (a) NFPA Document Title National Fuel Gas Code **NFPA No. & Year** 54, 200X Edition

(b) Section/Paragraph 3.3

2. Proposal Recommends (check one): ☐ new text ☒ revised text ☐ deleted text

3. Proposal (include proposed new or revised wording, or identification of wording to be deleted): [Note: Proposed text should be in legislative format; i.e., use underscore to denote wording to be inserted (inserted wording) and strike-through to denote wording to be deleted (~~deleted wording~~).]

Revise definition of effective ground-fault current path to read:

3.3.78 Effective Ground-Fault Current Path. An intentionally constructed, permanent, low impedance electrically conductive path designed and intended to carry ~~underground~~ electric fault current ~~conditions~~ from the point of a ground fault on a wiring system to the electrical supply source.

4. Statement of Problem and Substantiation for Proposal: (Note: State the problem that would be resolved by your recommendation; give the specific reason for your Proposal, including copies of tests, research papers, fire experience, etc. If more than 200 words, it may be abstracted for publication.)

Change uses proper electrical terms.

5. Copyright Assignment

(a) ☐ **I am the author of the text or other material (such as illustrations, graphs) proposed in this Proposal.**

(b) ☒ **Some or all of the text or other material proposed in this Proposal was not authored by me. Its source is as follows** (please identify which material and provide complete information on its source)**:**

ABC Co.

I agree that any material that I author, either individually or with others, in connection with work performed by an NFPA Technical Committee shall be considered to be works made for hire for the NFPA. To the extent that I retain any rights in copyright as to such material, or as to any other material authored by me that I submit for the use of an NFPA Technical Committee in the drafting of an NFPA code, standard, or other NFPA document, I hereby grant and assign all and full rights in copyright to the NFPA. I further agree and acknowledge that I acquire no rights in any publication of the NFPA and that copyright and all rights in materials produced by NFPA Technical Committees are owned by the NFPA and that the NFPA may register copyright in its own name.

Signature (Required)

PLEASE USE SEPARATE FORM FOR EACH PROPOSAL • NFPA Fax: (617) 770-3500

Mail to: Secretary, Standards Council, National Fire Protection Association, 1 Batterymarch Park, Quincy, MA 02169-7471

6/8/2007

SAMPLE

Copyright National Fire Protection Association
Provided by IHS under license with NFPA
No reproduction or networking permitted without license from IHS
Not for Resale

NFPA Technical Committee Document Proposal Form

NOTE: All Proposals must be received by 5:00 pm EST/EDST on the published Proposal Closing Date.

For further information on the standards-making process, please contact the Codes and Standards Administration at 617-984-7249 or visit www.nfpa.org/codes.

For technical assistance, please call NFPA at 1-888-344-3555.

FOR OFFICE USE ONLY

Log #: _____

Date Rec'd: _____

Please indicate in which format you wish to receive your ROP/ROC ☐ electronic ☐ paper ☐ download
(Note: If choosing the download option, you must view the ROP/ROC from our website; no copy will be sent to you.)

Date _____ **Name** _____ **Tel. No.** _____

Company _____

Street Address _____ **City** _____ **State** _____ **Zip** _____

Please indicate organization represented (if any) _____

1. (a) NFPA Document Title _____ **NFPA No. & Year** _____

(**b) Section/Paragraph** _____

2. Proposal Recommends (check one): ☐ new text ☐ revised text ☐ deleted text

3. Proposal (include proposed new or revised wording, or identification of wording to be deleted): [Note: Proposed text should be in legislative format; i.e., use underscore to denote wording to be inserted (inserted wording) and strike-through to denote wording to be deleted (~~deleted wording~~).]

4. Statement of Problem and Substantiation for Proposal: (Note: State the problem that would be resolved by your recommendation; give the specific reason for your Proposal, including copies of tests, research papers, fire experience, etc. If more than 200 words, it may be abstracted for publication.)

5. Copyright Assignment

(a) ☐ I am the author of the text or other material (such as illustrations, graphs) proposed in this Proposal.

(b) ☐ Some or all of the text or other material proposed in this Proposal was not authored by me. Its source is as follows (please identify which material and provide complete information on its source)**:**

_____

I agree that any material that I author, either individually or with others, in connection with work performed by an NFPA Technical Committee shall be considered to be works made for hire for the NFPA. To the extent that I retain any rights in copyright as to such material, or as to any other material authored by me that I submit for the use of an NFPA Technical Committee in the drafting of an NFPA code, standard, or other NFPA document, I hereby grant and assign all and full rights in copyright to the NFPA. I further agree and acknowledge that I acquire no rights in any publication of the NFPA and that copyright and all rights in materials produced by NFPA Technical Committees are owned by the NFPA and that the NFPA may register copyright in its own name.

Signature (Required) _____

PLEASE USE SEPARATE FORM FOR EACH PROPOSAL • NFPA Fax: (617) 770-3500

Mail to: Secretary, Standards Council, National Fire Protection Association, 1 Batterymarch Park, Quincy, MA 02169-7471

6/8/2007

--`,,```,,,,````-`-`,,`,,`,`,,`---

Copyright National Fire Protection Association
Provided by IHS under license with NFPA
No reproduction or networking permitted without license from IHS

Not for Resale