NFPA 251

Standard Methods of Tests of Fire Resistance of Building Construction and Materials

2006 Edition

NFPA, 1 Batterymarch Park, Quincy, MA 02169-7471
An International Codes and Standards Organization

--`,,```,,-`-`,,`,,`,`,,`---

Copyright National Fire Protection Association
Provided by IHS under license with NFPA
No reproduction or networking permitted without license from IHS

Not for Resale

IMPORTANT NOTICES AND DISCLAIMERS CONCERNING NFPA DOCUMENTS

NOTICE AND DISCLAIMER OF LIABILITY CONCERNING THE USE OF NFPA DOCUMENTS

NFPA codes, standards, recommended practices, and guides, of which the document contained herein is one, are developed through a consensus standards development process approved by the American National Standards Institute. This process brings together volunteers representing varied viewpoints and interests to achieve consensus on fire and other safety issues. While the NFPA administers the process and establishes rules to promote fairness in the development of consensus, it does not independently test, evaluate, or verify the accuracy of any information or the soundness of any judgments contained in its codes and standards.

The NFPA disclaims liability for any personal injury, property or other damages of any nature whatsoever, whether special, indirect, consequential or compensatory, directly or indirectly resulting from the publication, use of, or reliance on this document. The NFPA also makes no guaranty or warranty as to the accuracy or completeness of any information published herein.

In issuing and making this document available, the NFPA is not undertaking to render professional or other services for or on behalf of any person or entity. Nor is the NFPA undertaking to perform any duty owed by any person or entity to someone else. Anyone using this document should rely on his or her own independent judgment or, as appropriate, seek the advice of a competent professional in determining the exercise of reasonable care in any given circumstances.

The NFPA has no power, nor does it undertake, to police or enforce compliance with the contents of this document. Nor does the NFPA list, certify, test or inspect products, designs, or installations for compliance with this document. Any certification or other statement of compliance with the requirements of this document shall not be attributable to the NFPA and is solely the responsibility of the certifier or maker of the statement.

--`,,```,,,-`-`,,`,,`,`,,`---

Copyright National Fire Protection Association
Provided by IHS under license with NFPA
No reproduction or networking permitted without license from IHS

Not for Resale

ADDITIONAL NOTICES AND DISCLAIMERS

Updating of NFPA Documents

Users of NFPA codes, standards, recommended practices, and guides should be aware that these documents may be superseded at any time by the issuance of new editions or may be amended from time to time through the issuance of Tentative Interim Amendments. An official NFPA document at any point in time consists of the current edition of the document together with any Tentative Interim Amendments and any Errata then in effect. In order to determine whether a given document is the current edition and whether it has been amended through the issuance of Tentative Interim Amendments or corrected through the issuance of Errata, consult appropriate NFPA publications such as the National Fire Codes® Subscription Service, visit the NFPA website at www.nfpa.org, or contact the NFPA at the address listed below.

Interpretations of NFPA Documents

A statement, written or oral, that is not processed in accordance with Section 6 of the Regulations Governing Committee Projects shall not be considered the official position of NFPA or any of its Committees and shall not be considered to be, nor be relied upon as, a Formal Interpretation.

Patents

The NFPA does not take any position with respect to the validity of any patent rights asserted in connection with any items which are mentioned in or are the subject of NFPA codes, standards, recommended practices, and guides, and the NFPA disclaims liability for the infringement of any patent resulting from the use of or reliance on these documents. Users of these documents are expressly advised that determination of the validity of any such patent rights, and the risk of infringement of such rights, is entirely their own responsibility.

NFPA adheres to applicable policies of the American National Standards Institute with respect to patents. For further information contact the NFPA at the address listed below.

Law and Regulations

Users of these documents should consult applicable federal, state, and local laws and regulations. NFPA does not, by the publication of its codes, standards, recommended practices, and guides, intend to urge action that is not in compliance with applicable laws, and these documents may not be construed as doing so.

Copyrights

This document is copyrighted by the NFPA. It is made available for a wide variety of both public and private uses. These include both use, by reference, in laws and regulations, and use in private self-regulation, standardization, and the promotion of safe practices and methods. By making this document available for use and adoption by public authorities and private users, the NFPA does not waive any rights in copyright to this document.

Use of NFPA documents for regulatory purposes should be accomplished through adoption by reference. The term "adoption by reference" means the citing of title, edition, and publishing information only. Any deletions, additions, and changes desired by the adopting authority should be noted separately in the adopting instrument. In order to assist NFPA in following the uses made of its documents, adopting authorities are requested to notify the NFPA (Attention: Secretary, Standards Council) in writing of such use. For technical assistance and questions concerning adoption of NFPA documents, contact NFPA at the address below.

For Further Information

All questions or other communications relating to NFPA codes, standards, recommended practices, and guides and all requests for information on NFPA procedures governing its codes and standards development process, including information on the procedures for requesting Formal Interpretations, for proposing Tentative Interim Amendments, and for proposing revisions to NFPA documents during regular revision cycles, should be sent to NFPA headquarters, addressed to the attention of the Secretary, Standards Council, NFPA, 1 Batterymarch Park, P.O. Box 9101, Quincy, MA 02269-9101.

For more information about NFPA, visit the NFPA website at www.nfpa.org.

Copyright National Fire Protection Association
Provided by IHS under license with NFPA
No reproduction or networking permitted without license from IHS
Not for Resale

Copyright © 2005, National Fire Protection Association, All Rights Reserved

NFPA 251

Standard Methods of Tests of

Fire Resistance of Building Construction and Materials

2006 Edition

This edition of NFPA 251, *Standard Methods of Tests of Fire Resistance of Building Construction and Materials*, was prepared by the Technical Committee on Fire Tests and acted on by NFPA at its June Association Technical Meeting held June 6–10, 2005, in Las Vegas, NV. It was issued by the Standards Council on July 29, 2005, with an effective date of August 18, 2005, and supersedes all previous editions.

This edition of NFPA 251 was approved as an American National Standard on August 18, 2005.

Origin and Development of NFPA 251

NFPA 251 originated in the recommendations of the International Fire Prevention Congress in London in 1903. It was presented to the NFPA by the Committee on Fire-Resistive Construction in 1914. It was adopted officially in a revised form in 1918. Successive editions were published in 1926, 1934, 1941, 1955, 1958, 1959, 1960, 1961, 1963, 1969, 1979, 1985, and 1990. It was overseen, in succession, by the Technical Committee on Fire-Resistive Construction, the Technical Committee on Building Construction, and, for the last three editions, by the Technical Committee on Fire Tests.

The 1995 edition of this document was a reconfirmation of the earlier edition with only a few items being addressed. Substantial investigation and record research was done on the topic of the hose stream application on test specimens. The findings of the committee did not support modification of the provision that permits a test assembly to be tested for one-half the time required for an hourly rating and then to be tested by a hose stream.

The committee also modified the title of this document in response to the research done to convey a truer sense of the standard's proper application.

The 1999 edition was a reconfirmation of the 1995 edition with minor editorial modifications.

The 2006 edition includes a complete editorial rewrite for compliance with the *Manual of Style for NFPA Technical Committee Documents*. The title of the document was revised to more accurately reflect the subject matter, and further organizational and editorial changes were made to improve the application of the test method. Technical changes include the addition of definitions of *fire resistance* and *fire resistance rating* and modifications to the hose stream test requirements.

--`,,```,-`-`,,`,,`,`,,`---

Copyright National Fire Protection Association
Provided by IHS under license with NFPA
No reproduction or networking permitted without license from IHS
Not for Resale

Technical Committee on Fire Tests

William E. Fitch, *Chair*
Omega Point Laboratories Inc., TX [RT]

Jesse J. Beitel, Hughes Associates, Inc., MD [SE]
April L. Berkol, Starwood Hotels and Resorts Worldwide, Inc., NY [U]
Rep. American Hotel and Lodging Association
Robert G. Bill, Jr., FM Global, MA [I]
John A. Blair, The DuPont Company, DE [M]
Rep. Society of the Plastics Industry, Inc.
Gordon H. Damant, Inter-City Testing and Consulting Corp. of California, CA [SE]
Thomas W. Fritz, Armstrong World Industries, Inc., PA [M]
Pravinray D. Gandhi, Underwriters Laboratories Inc., IL [RT]
James R. Griffith, Southwest Research Institute, TX [RT]
Gordon E. Hartzell, Hartzell Consulting, Inc., TX [SE]
Marcelo M. Hirschler, GBH International, CA [SE]
Alfred J. Hogan, Reedy Creek Improvement District, FL [E]
Rep. International Fire Marshals Association
William E. Koffel, Koffel Associates, Inc., MD [SE]
James R. Lawson, U.S. National Institute of Standards and Technology, MD [RT]
Rodney A. McPhee, Canadian Wood Council, Canada [M]
Frederick W. Mowrer, University of Maryland, MD [SE]
David T. Sheppard, U.S. Department of Justice, MD [RT]
Kuma Sumathipala, American Forest & Paper Association, DC [M]
T. Hugh Talley, Hugh Talley Company, TN [M]
Rep. Upholstered Furniture Action Council
Rick Thornberry, The Code Consortium, Inc., CA [SE]
William A. Webb, Schirmer Engineering Corporation, IL [I]
Robert A. Wessel, Gypsum Association, DC [M]
Robert J. Wills, American Iron and Steel Institute, AL [M]
Peter J. Willse, GE Global Asset Protection Services, CT [I]

Alternates

Robert M. Berhinig, Underwriters Laboratories Inc., IL [RT]
(Alt. to P. D. Gandhi)
Delbert F. Boring, Jr., American Iron and Steel Institute, OH [M]
(Alt. to R. J. Wills)
Richard J. Davis, FM Global, MA [I]
(Alt. to R. G. Bill)
Sam W. Francis, American Forest & Paper Association, PA [M]
(Alt. to K. Sumathipala)
Richard G. Gann, U.S. National Institute of Standards and Technology, MD [RT]
(Alt. to J. R. Lawson)
Paul A. Hough, Armstrong World Industries, Inc., PA [M]
(Alt. to T. W. Fritz)
Marc L. Janssens, Southwest Research Institute, TX [RT]
(Alt. to J. R. Griffith)
James K. Lathrop, Koffel Associates, Inc., CT [SE]
(Alt. to W. E. Koffel)
James A. Milke, University of Maryland, MD [SE]
(Alt. to F. W. Mowrer)
Arthur J. Parker, Hughes Associates, Inc., MD [SE]
(Alt. to J. J. Beitel)
Ronald A. Schulz, GE Global Asset Protection Services, MI [I]
(Alt. to P. J. Willse)
Ineke Van Zeeland, Canadian Wood Council, Canada [M]
(Alt. to R. A. McPhee)
Joe Ziolkowski, American Furniture Manufacturers Association, NC [M]
(Alt. to T. H. Talley)

Nonvoting

Robert H. Barker, American Fiber Manufacturers Association, VA [M]
(Alt. to Nonvoting Principal)
Tod L. Jilg, Hoechst Celanese Corporation, NC [M]
Rep. American Fiber Manufacturers Association
Rohit Khanna, U.S. Consumer Product Safety Commission, MD [C]

Milosh T. Puchovsky, NFPA Staff Liaison

This list represents the membership at the time the Committee was balloted on the final text of this edition. Since that time, changes in the membership may have occurred. A key to classifications is found at the back of the document.

NOTE: Membership on a committee shall not in and of itself constitute an endorsement of the Association or any document developed by the committee on which the member serves.

Committee Scope: This Committee shall have primary responsibility for documents on fire testing procedures, for reviewing existing fire test standards and recommending appropriate action to NFPA, for recommending the application of and advising on the interpretation of acceptable test standards for fire problems of concern to NFPA technical committees and members, and for acting in a liaison capacity between NFPA and the committees of other organizations writing fire test standards. This Committee does not cover fire tests that are used to evaluate extinguishing agents, devices, or systems.

--`,,```,-`-`,,`,,`,`,,`---

Copyright National Fire Protection Association
Provided by IHS under license with NFPA
No reproduction or networking permitted without license from IHS
Not for Resale

Contents

Chapter 1 Administration **251–** 5
1.1 Scope **251–** 5
1.2 Purpose **251–** 5
1.3 Application **251–** 5
1.4 Units **251–** 5

Chapter 2 Referenced Publications **251–** 5
2.1 General **251–** 5
2.2 NFPA Publications. (Reserved) **251–** 5
2.3 Other Publications **251–** 5
2.4 References for Extracts in Mandatory Sections. (Reserved) **251–** 5

Chapter 3 Definitions **251–** 6
3.1 General **251–** 6
3.2 NFPA Official Definitions **251–** 6
3.3 General Definitions **251–** 6

Chapter 4 Control of Fire Tests **251–** 6
4.1 Temperature–Time Curve **251–** 6
4.2 Furnace Temperatures **251–** 6
4.3 Temperatures of Unexposed Surfaces of Floors, Roofs, Walls, and Partitions **251–** 6
4.4 Furnace Pressure **251–** 7

Chapter 5 Test Specimen **251–** 8
5.1 Specimen **251–** 8
5.2 Protection and Conditioning of Test Specimen **251–** 8

Chapter 6 Conduct of Fire Tests **251–** 9
6.1 Fire Resistance Test **251–** 9
6.2 Hose Stream Test **251–** 9

Chapter 7 Tests of Bearing Walls and Partitions ... **251–** 9
7.1 Size and Restraint of Specimen **251–** 9
7.2 Loading **251–** 9
7.3 Conditions of Acceptance **251–** 9

Chapter 8 Tests of Nonbearing Walls and Partitions **251–** 9
8.1 Size and Restraint of Specimen **251–** 9
8.2 Conditions of Acceptance **251–** 9

Chapter 9 Tests of Columns **251–**10
9.1 Size and Connections of Specimen **251–**10
9.2 Loading **251–**10
9.3 Conditions of Acceptance **251–**10

Chapter 10 Alternative Test of Protection for Structural Steel Columns **251–**10
10.1 Application **251–**10
10.2 Size and Character of Specimen **251–**10
10.3 Temperature Measurement **251–**10
10.4 Exposure to Fire **251–**10
10.5 Conditions of Acceptance **251–**10

Chapter 11 Tests of Floor and Roof Assemblies ... **251–**10
11.1 Application **251–**10
11.2 Size and Characteristics of Specimen **251–**10
11.3 Loading **251–**11
11.4 Temperature Measurement **251–**11
11.5 Conditions of Acceptance — Restrained Assembly **251–**11
11.6 Conditions of Acceptance — Unrestrained Assembly **251–**12

Chapter 12 Tests of Loaded Restrained Beams **251–**12
12.1 Application **251–**12
12.2 Size and Characteristics of Specimen **251–**12
12.3 Loading **251–**12
12.4 Conditions of Acceptance **251–**12

Chapter 13 Alternative Procedure for Loaded Beams **251–**12
13.1 Application **251–**12
13.2 Temperature Measurement **251–**12
13.3 Conditions of Acceptance **251–**13

Chapter 14 Alternative Test of Protection for Solid Structural Steel Beams and Girders **251–**13
14.1 Application **251–**13
14.2 Size and Character of Specimen **251–**13
14.3 Temperature Measurement **251–**13
14.4 Conditions of Acceptance **251–**13

Chapter 15 Performance of Protective Membranes in Wall, Partition, Floor, or Roof Assemblies **251–**13
15.1 Application **251–**13
15.2 Characteristics and Size of Sample **251–**13
15.3 Temperature Performance of Protective Membranes **251–**13
15.4 Conditions of Performance **251–**14

Chapter 16 Report of Results **251–**14
16.1 Fire Resistance Rating as Determined by Test **251–**14
16.2 Test of Floor and Roof Assemblies **251–**14
16.3 Performance of Protective Membranes **251–**14
16.4 Tests of Load-Bearing Assemblies **251–**15

Annex A Explanatory Material **251–**15

Annex B Operating Criteria for Fire Tests **251–**16

Annex C Recommendations for Thermocouple Pads **251–**18

--`,,```,-`-`,,`,,`,`,,`---

Copyright National Fire Protection Association
Provided by IHS under license with NFPA
No reproduction or networking permitted without license from IHS
Not for Resale

Annex D Report Information **251**–18

Annex E Guide for Determining Conditions of Restraint for Floor and Roof Assemblies and for Individual Beams **251**–19

Annex F Method of Correcting Fire Endurance for Concrete Slabs Determined by Unexposed Surface Temperature Rise for Nonstandard Moisture Content **251**–20

Annex G Commentary **251**–22

Annex H Informational References **251**–26

Index **251**–28

Copyright National Fire Protection Association
Provided by IHS under license with NFPA
No reproduction or networking permitted without license from IHS
Not for Resale

NFPA 251

Standard Methods of Tests of

Fire Resistance of Building Construction and Materials

2006 Edition

IMPORTANT NOTE: This NFPA document is made available for use subject to important notices and legal disclaimers. These notices and disclaimers appear in all publications containing this document and may be found under the heading "Important Notices and Disclaimers Concerning NFPA Documents." They can also be obtained on request from NFPA or viewed at www.nfpa.org/disclaimers.

NOTICE: An asterisk (*) following the number or letter designating a paragraph indicates that explanatory material on the paragraph can be found in Annex A.

Information on referenced publications can be found in Chapter 2 and Annex H.

Chapter 1 Administration

1.1* Scope. This standard provides methods of fire tests for the fire-resistive properties of building members and assemblies.

1.2 Purpose.

1.2.1 This standard describes methods to evaluate the duration for which the types of assemblies noted in 1.3.1 contain a fire, retain their structural integrity, or exhibit both properties, depending on the type of assembly involved during a predetermined test exposure.

1.2.2 It is the intention of this standard that fire resistance ratings be based on performance during the period of exposure and not be used to determine suitability for use after fire exposure.

1.2.3* The results of these tests are one factor in assessing fire performance of building construction and assemblies.

1.3 Application.

1.3.1 These methods of fire tests apply to assemblies of masonry units and to composite assemblies of structural materials for buildings, including bearing and other walls and partitions, columns, girders, beams, slabs, and composite slab and beam assemblies for floors and roofs.

1.3.2 They also apply to other assemblies and structural units that constitute permanent integral parts of a finished building.

1.3.3 This standard requires a specimen to be exposed to a standard fire exposure that is controlled to achieve specified temperatures throughout a specific time period.

1.3.4 In some instances, the fire exposure is followed by the application of a specified standard fire hose stream.

1.3.5 The exposure is not to be considered representative of all fire conditions, which vary with changes in the amount, nature, and distribution of fire loading, ventilation, compartment size and configuration, and heat sink characteristics of the compartment.

1.3.6 The test provides a relative measure of fire performance of comparable assemblies under specified fire exposure conditions.

1.3.7 Variations in the construction or conditions (e.g., size, method of assembly, and materials) that are tested substantially vary the performance characteristics of the assembly.

1.3.8 The standard provides methods to measure the following:

(1) In walls, partitions, and floor or roof assemblies:
   (a) Transmission of heat
   (b) Transmission of hot gases through the assembly sufficient to ignite cotton waste
   (c) Load-carrying ability of the test specimen during the test exposure where load-bearing elements are included
(2) For individual load-bearing assemblies such as beams and columns, a load-carrying ability under the test exposure with some consideration for the end support conditions (i.e., restrained or unrestrained)

1.3.9 The standard does not provide the following:

(1) Full information on the performance of assemblies constructed with components or lengths other than those tested
(2) Evaluation of the degree to which the assembly contributes to the fire hazard by generation of smoke, toxic gases, or other products of combustion
(3) Measurement of the degree of control or limitation of the passage of smoke or products of combustion through the assembly
(4) Simulation of the fire behavior of joints between building elements, such as floor-to-wall or wall-to-wall connections
(5) Measurement of flame spread over the surface of the tested element
(6) Effect on fire endurance of conventional openings in the assembly (e.g., electrical receptacle outlets, plumbing pipe) unless specifically provided for in the construction tested

1.4 Units. The U.S. customary (inch-pound) value for a measurement and the International System of Units (SI) value given in parentheses shall each be acceptable for use as primary units for satisfying the requirements of this standard.

Chapter 2 Referenced Publications

2.1 General. The documents or portions thereof listed in this chapter are referenced within this standard and shall be considered part of the requirements of this document.

2.2 NFPA Publications. (Reserved)

2.3 Other Publications.

2.3.1 ASTM Publications. American Society for Testing and Materials, 100 Barr Harbor Drive, West Conshohocken, PA 19428-2959.

ASTM C 569, *Test for Indentation Hardness of Preformed Thermal Insulations*, 1989.

ASTM E 2226, *Standard Practice for Application of Hose Stream*, 2002.

2.3.2 Other Publication. *Merriam-Webster's Collegiate Dictionary*, 11th edition, Merriam-Webster, Inc., Springfield, MA, 2003.

2.4 References for Extracts in Mandatory Sections. (Reserved)

--`,,```,-`-`,,`,,`,`,,`---
Copyright National Fire Protection Association
Provided by IHS under license with NFPA
No reproduction or networking permitted without license from IHS
Not for Resale

Chapter 3 Definitions

3.1 General. The definitions contained in this chapter shall apply to the terms used in this standard. Where terms are not defined in this chapter or within another chapter, they shall be defined using their ordinarily accepted meanings within the context in which they are used. *Merriam-Webster's Collegiate Dictionary*, 11th edition, shall be the source for the ordinarily accepted meaning.

3.2 NFPA Official Definitions.

3.2.1 Shall. Indicates a mandatory requirement.

3.2.2 Should. Indicates a recommendation or that which is advised but not required.

3.2.3 Standard. A document, the main text of which contains only mandatory provisions using the word "shall" to indicate requirements and which is in a form generally suitable for mandatory reference by another standard or code or for adoption into law. Nonmandatory provisions shall be located in an appendix or annex, footnote, or fine-print note and are not to be considered a part of the requirements of a standard.

3.3 General Definitions.

3.3.1* Fire Resistance. The measure of the ability of a material, product, or assembly to withstand fire or give protection from it.

3.3.2* Fire Resistance Rating. The time, in minutes or hours, that materials or assemblies have withstood a standard fire exposure. The rating should be determined in accordance with the test procedures of this standard.

Chapter 4 Control of Fire Tests

4.1 Temperature–Time Curve.

4.1.1* The conduct of fire tests of materials and construction shall be controlled by the standard temperature–time curve shown in Figure 4.1.1.

4.1.2 The temperature inside the furnace shall be ambient when the test begins.

4.2* Furnace Temperatures.

4.2.1* The temperature fixed by the curve shall be the average temperature obtained from the readings of no fewer than nine thermocouples for a floor, roof, wall, or partition and no fewer than eight thermocouples for a structural column.

4.2.1.1 The thermocouples shall be symmetrically disposed and distributed to show the temperature near all parts of the sample and shall be enclosed in protection tubes of such materials and dimensions that the time constant of the protected thermocouple assembly lies within the range of 5.0 minutes to 7.2 minutes.

4.2.1.2 The exposed length of the pyrometer tube and the thermocouple in the furnace chamber shall be not less than 12 in. (305 mm).

4.2.1.3 Other types of protecting tubes or pyrometers shall be permitted to be used that, under test conditions, provide the time range of 5.0 minutes to 7.2 minutes within the accuracy requirement that applies for the measurement of furnace temperature.

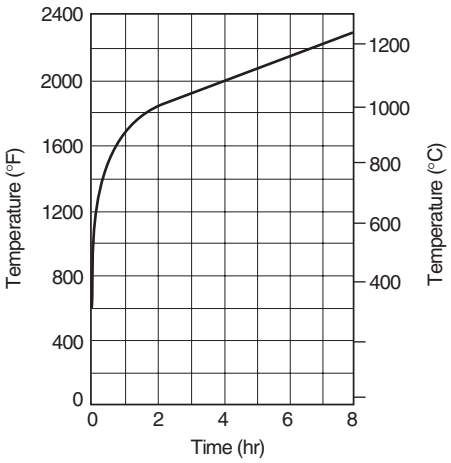

1000°F (538°C) . . . . . at 5 minutes
1300°F (704°C) . . . . . at 10 minutes
1550°F (843°C) . . . . . at 30 minutes
1700°F (927°C) . . . . . at 1 hour
1850°F (1010°C) . . . . . at 2 hours
2000°F (1093°C) . . . . . at 4 hours
2300°F (1260°C) . . . . . at 8 hours or over

FIGURE 4.1.1 Temperature–Time Curve.

4.2.1.4 For floors and columns, the junction of the thermocouples shall be placed 12 in. (305 mm) away from the exposed face of the specimen at the beginning of the test and, during the test, shall not touch the sample as a result of its deflection.

4.2.1.5 In the case of walls and partitions, the thermocouples shall be placed 6 in. (152 mm) away from the exposed face of the specimen at the beginning of the test and shall not touch the specimen during the test in the event of deflection.

4.2.2 The temperatures shall be measured at intervals not exceeding 1 minute during the test period.

4.2.3 The accuracy of the furnace control shall be such that the area under the temperature–time curve, obtained by averaging the results from the pyrometer readings, is within the following percentages of the corresponding area under the standard temperature–time curve shown in Figure 4.1.1:

(1) 10 percent for fire tests of 1 hour or less
(2) 7.5 percent for fire tests over 1 hour and not more than 2 hours
(3) 5 percent for fire tests exceeding 2 hours

4.3 Temperatures of Unexposed Surfaces of Floors, Roofs, Walls, and Partitions.

4.3.1* Temperatures of unexposed surfaces shall be measured with thermocouples or thermometers placed under thermocouple pads.

4.3.1.1 Thermocouple pads shall meet the following requirements or otherwise shall be demonstrated to be equivalent by comparative NFPA 251 tests:

(1) Length and width, 6 in. ± ⅛ in. (1.52 mm ± 3.2 mm)
(2) Thickness, 0.40 in. ± 0.05 in. (10.2 mm ± 1.3 mm)
(3) Thermal conductivity [at 150°F (65°C)], 0.38 ± 0.027 Btu·in./hr·ft^2·°F (0.55 ± 0.039 W/m·K)

Copyright National Fire Protection Association
Provided by IHS under license with NFPA
No reproduction or networking permitted without license from IHS
Not for Resale

(4) Dry weight, 0.147 lb ± 0.053 lb (67 g ± 24 g)
(5)*Hardness indentation on soft face, 0.075 in. ± 0.025 in. (1.9 mm ± 0.6 mm), with indentation determined in accordance with ASTM C 569, *Test for Indentation Hardness of Preformed Thermal Insulations*

4.3.1.2 The wire leads of the thermocouple or the stem of the thermometer shall have an immersion under the pad and shall be in contact with the unexposed surface for not less than 3½ in. (90 mm).

4.3.1.3 The hot junction of the thermocouple or the bulb of the thermometer shall be placed under the approximate center of the pad.

4.3.1.4 The outside diameter of protecting or insulating tubes and of thermometer stems shall be not more than 5/16 in. (8 mm).

4.3.1.5 The pad shall be held firmly against the surface and shall fit closely about the thermocouples or thermometer stems.

4.3.1.6 Thermometers shall be of the partial-immersion type, with a length of stem between the end of the bulb and the immersion mark of 3 in. (76 mm).

4.3.1.7 The wires for the thermocouple in the length covered by the pad shall be not heavier than No. 18 B&S gauge [0.04 in. (1.02 mm)] and shall be electrically insulated with heat-resistant and moisture-resistant coatings.

4.3.2 Temperature measurements shall be obtained from at least nine points on the surface, as follows:

(1) Five thermocouples shall be symmetrically disposed as follows:
   (a) One located approximately at the center of the specimen
   (b) Four located approximately at the center of each quadrant
(2) The other four thermocouples shall be located at the discretion of the testing authority to obtain representative information on the performance of the construction under test.
(3) All the thermocouples shall be located at a distance at least 1½ times the thickness of the construction or 12 in. (305 mm) from the edges of the test specimen.
(4) The distance requirements specified in 4.3.2(3) shall not apply where an element of the assembly is located near the edge only.
(5) None of the thermocouples shall be located opposite or on top of beams, girders, pilasters, or other structural members if temperatures at such points are lower than at more representative locations.
(6) None of the thermocouples shall be located opposite or on top of fasteners such as screws, nails, or staples that are higher or lower in temperature than at more representative locations if the aggregate area of any part of such fasteners projected to the unexposed surface is less than 1 percent of the area within any 6 in. (152 mm) diameter circle.
(7) The fasteners specified in 4.3.2(6) shall not be required to extend through the assembly.

4.3.3 Temperature readings shall be measured at intervals not exceeding 1 minute.

4.3.4 Where the conditions of acceptance place a limitation on the rise of the temperature of the unexposed surface, the temperature end point of the fire resistance period shall be determined by the average of the measurements taken at individual points.

4.3.5 Where a temperature rise of 30 percent in excess of the specified limit occurs at any one of the individual measurement points, all other points shall be ignored, and the fire endurance period shall be judged as ended.

4.4 Furnace Pressure.

4.4.1 The pressure-sensing probes shall be as shown in Figure 4.4.1(a) or Figure 4.4.1(b).

4.4.2 The pressure shall be measured using a differential pressure instrument capable of reading in increments no coarser than 0.01 in. wg (2.5 Pa) with a precision of not less than ±0.005 in. wg (±1.25 Pa).

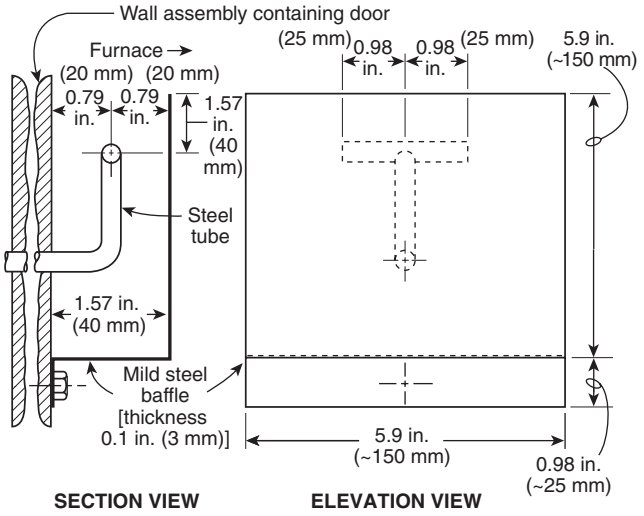

FIGURE 4.4.1(a) Static Pressure-Sensing Probe Dimensions.

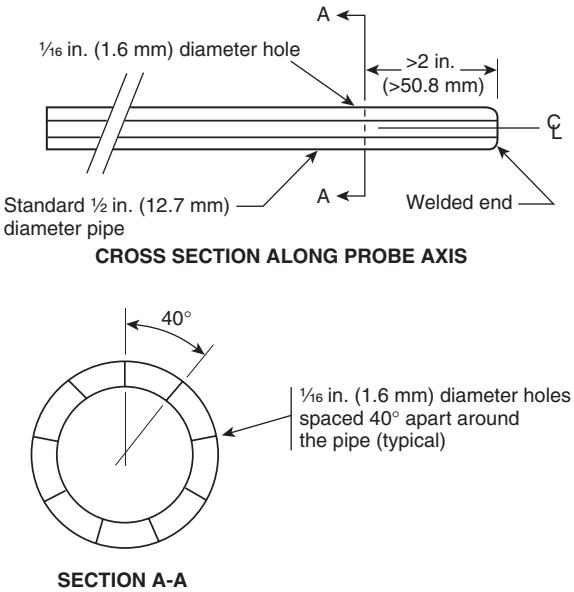

FIGURE 4.4.1(b) Pressure-Sensing Probe.

Copyright National Fire Protection Association
Provided by IHS under license with NFPA
No reproduction or networking permitted without license from IHS
Not for Resale

4.4.3 The differential pressure measurement instrument(s) shall be located to minimize stack effects caused by vertical runs of pressure tubing between the furnace probe(s) and instrument locations.

4.4.4 The furnace pressure(s) shall be measured and recorded at intervals not exceeding 1 minute throughout the test.

4.4.5 Control of the furnace pressure shall be established no later than 10 minutes after the start of the test and shall be maintained throughout the remainder of the test.

4.4.5.1 For vertical specimens, the vertical pressure distribution within the furnace shall be measured by at least two probes separated by a vertical distance [minimum of 6 ft (1.8 m)] within the furnace.

4.4.5.1.1 A calculation of the location of the neutral plane (zero differential pressure) shall be made based on the vertical separation of the probes and their pressure differences.

4.4.5.1.2 The pressure measurements made inside the furnace, along with the calculation showing the position of the neutral plane with respect to the top of the vertical assembly during the test, shall be reported.

4.4.5.2* For horizontal specimens, the following criteria shall be met:

(1) The pressure shall be measured at two locations along the centerline of the specimen and 12 in. (305 mm) below the specimen.
(2) The pressure (the average of the two readings) during the test shall be reported.

Chapter 5 Test Specimen

5.1 Specimen.

5.1.1 The test specimen shall be a true representation of the construction for which the fire resistance rating is to be determined with respect to materials, workmanship, and details such as dimension of parts.

5.1.1.1 The specimen shall be built under conditions representative of those properties that are applied in actual building construction and operation.

5.1.1.2 The physical properties of the materials and ingredients used in the test specimen shall be determined and recorded.

5.1.2 The following shall apply to the size and dimensions of the test specimen:

(1) They shall be recognized as being intended to apply in rating constructions of dimensions within the normal general range used in buildings.
(2) Where the conditions of use limit the construction to smaller dimensions, a proportionate reduction shall be permitted to be made in the dimensions of the specimens for a test used to qualify them for such restricted use.

5.1.3 Where it is desired to include a built-up roof covering, the following criteria shall be met:

(1) The test specimen shall have a roof covering of 3-ply, 15 lb (6.8 kg) type felt not in excess of 120 lb (54.4 kg) per 100 ft^2 (9.3 m^2) of hot mopping asphalt without gravel surfacing.
(2) Tests of assemblies with such roof covering shall not preclude the field use of other built-up roof coverings.

5.2 Protection and Conditioning of Test Specimen. The test specimen shall be protected during and after fabrication to ensure its quality and condition when tested.

5.2.1 The specimen shall not be tested until close to its full strength, and if it contains moisture, it shall not be tested until the excess moisture has been removed to achieve an air-dry condition in accordance with the requirements of 5.2.2 through 5.2.5.

5.2.2 The testing equipment and sample undergoing the fire test shall be protected from any condition of wind or weather that might lead to abnormal results.

5.2.3 The ambient air temperature at the beginning of the test shall be within the range of 50°F to 90°F (10°C to 32°C).

5.2.4 The velocity of air across the unexposed surface of the sample, measured immediately before the test begins, shall not exceed 4.4 ft/sec (1.3 m/sec) as determined by an anemometer placed at a right angle to the unexposed surface.

5.2.5 If mechanical ventilation is used during the test, an airstream shall not be directed across the surface of the specimen.

5.2.6* Prior to the fire test, the construction shall be conditioned with the objective of providing a moisture condition in the specimen representative of that likely to exist in similar construction in buildings.

5.2.6.1 For purposes of standardization, the moisture condition shall be considered to be that which would exist at equilibrium as a result of drying in an ambient atmosphere of 50 percent relative humidity at 73°F (23°C).

5.2.6.2 Where it is difficult or impossible to achieve such a condition within a reasonable time, specimens shall be permitted to be tested when the dampest portion of the structure [i.e., the portion at 6 in. (152 mm) depth below the surface of massive constructions] has achieved a moisture content corresponding to drying to equilibrium with air in the range of 50 percent to 75 percent relative humidity at 73°F ± 5°F (23°C ± 3°C).

5.2.6.3 The following also shall apply to the requirements for conditioning of the test specimen:

(1) In the event that specimens dried in a heated building fail to meet the requirements of Section 5.2 through 5.2.6.2 after a 12-month conditioning period or in the event that the nature of the construction is such that it is evident that drying of the specimen interior is prevented by hermetic sealing, these requirements shall be permitted to be waived.
(2) The requirement for testing of the specimen only after nearing its full strength shall not be permitted to be waived.

5.2.7 If during the conditioning of the specimen it appears desirable or is necessary to use accelerated drying techniques, it shall be the responsibility of the laboratory conducting the test to avoid procedures that significantly alter the structural or fire endurance characteristics of the specimen, or both, from those produced as the result of drying in accordance with the procedures in 5.2.1.

5.2.8* Within 72 hours prior to the fire test, information on the actual moisture content and distribution within the specimen shall be obtained and included in the test report.

Copyright National Fire Protection Association
Provided by IHS under license with NFPA
No reproduction or networking permitted without license from IHS
Not for Resale

Chapter 6 Conduct of Fire Tests

6.1 Fire Resistance Test.

6.1.1 A fire resistance test on the specimen, including its applied load, if any, shall be continued until failure occurs or until the specimen has withstood the test conditions for a period equal to that herein specified in the conditions of acceptance for the given type of construction.

6.1.2 For the purpose of obtaining additional performance data, the test shall be permitted to be continued beyond the time the fire endurance classification is determined.

6.2 Hose Stream Test.

6.2.1 Where required by the conditions of acceptance specified in Section 7.3 or Section 8.2 for walls or partitions having a fire resistance rating of not less than 1 hour, a hose stream test shall be conducted in accordance with Section 6.2.

6.2.2 Unless otherwise provided for in 6.2.3, the hose stream test shall be conducted on a duplicate test specimen immediately after it has been subjected to the fire resistance test for a period equal to one-half of the period indicated as the fire resistance rating, but for not more than 1 hour.

6.2.3 It shall be permitted to conduct the hose stream test on the original test specimen.

6.2.4 The test equipment and test procedures for conducting the hose stream test shall be as described in ASTM E 2226, *Standard Practice for Application of Hose Stream.*

6.2.5 The water pressure and duration of application shall be as specified in Table 6.2.5.

Table 6.2.5 Hose Stream Test

	Water Pressure at Base of Nozzle		Duration of Application to Exposed Area	
Resistance Period	psi	kPa	min/ 100 ft^2	min/ 9.3 m^2
8 hr and over	45	310	6	0.65
4 hr and over, if less than 8 hr	45	310	5	0.54
2 hr and over, if less than 4 hr	30	207	2½	0.27
1½ hr and over, if less than 2 hr	30	207	1½	0.16
1 hr and over, if less than 1½ hr	30	207	1	0.11
Less than 1 hr, if desired	30	207	1	0.11

Chapter 7 Tests of Bearing Walls and Partitions

7.1 Size and Restraint of Specimen.

7.1.1 The area exposed to fire shall be not less than 100 ft^2 (9.3 m^2), with neither dimension less than 9 ft (2.7 m).

7.1.2 The test specimen shall not be restrained on its vertical edges.

7.2* Loading. Throughout the fire endurance and fire and hose stream tests, a constant superimposed load shall be applied to simulate a maximum load condition.

7.2.1 The applied load shall be, as nearly as practicable, the maximum load permitted by design under nationally recognized structural design criteria.

7.2.2 The tests also shall be permitted to be conducted by applying to the specimen a load less than the maximum and shall be identified in the test report as having been conducted under restricted load conditions.

7.2.3 The applied load and the applied load expressed as a percentage of the maximum permitted design load shall be included in the report.

7.2.4 A double-wall assembly shall be loaded during the test to simulate field-use conditions, with either side loaded separately or both sides loaded together and the method used reported.

7.3 Conditions of Acceptance. The test shall be regarded as valid if the following conditions are met:

(1) The wall or partition shall have sustained the applied load during the fire endurance test without passage of flame or gases hot enough to ignite cotton waste for a period equal to that required for the fire resistance rating desired.
(2) The wall or partition shall have sustained the applied load during the fire and hose stream test, as specified in Section 6.2, without passage of flame, gases hot enough to ignite cotton waste, or the hose stream.
(3) The wall or partition shall be considered to have failed the hose stream test specified in Section 6.2 if an opening develops that allows a projection of water from the stream beyond the unexposed surface during the hose stream test.
(4) Transmission of heat through the wall or partition during the fire endurance test shall not be sufficient to raise the temperature on the unexposed surface more than 250°F (140°C) above the assembly's initial temperature.

Chapter 8 Tests of Nonbearing Walls and Partitions

8.1 Size and Restraint of Specimen.

8.1.1 The area exposed to fire shall be not less than 100 ft^2 (9.3 m^2), with neither dimension less than 9 ft (2.7 m).

8.1.2 The test specimen shall be restrained on all four edges.

8.2 Conditions of Acceptance. The test shall be regarded as valid if the following conditions are met:

(1) The wall or partition shall have withstood the fire endurance test without passage of flame or gases hot enough to ignite cotton waste for a period equal to that required for the fire resistance rating desired.
(2) The wall or partition shall have withstood the fire and hose stream tests, as specified in Section 6.2, without passage of flame, gases hot enough to ignite cotton waste, or the hose stream.
(3) The wall or partition shall be considered to have failed the hose stream test specified in Section 6.2 if an opening develops that allows a projection of water from the stream beyond the unexposed surface during the hose stream test.
(4) Transmission of heat through the wall or partition during the fire endurance test shall not be sufficient to raise the temperature on the assembly's unexposed surface more than 250°F (140°C) above the assembly's initial temperature.

Copyright National Fire Protection Association
Provided by IHS under license with NFPA
No reproduction or networking permitted without license from IHS
Not for Resale

Chapter 9 Tests of Columns

9.1 Size and Connections of Specimen.

9.1.1 The length of the column exposed to fire shall, where practicable, approximate the maximum clear length contemplated by the design and, for building columns, shall be not less than 9 ft (2.7 m).

9.1.2 The contemplated details of connections and their protection, if any, shall be applied according to the methods of standard field practice.

9.2 Loading.

9.2.1 Throughout the fire endurance test, the column shall be exposed to fire on all sides and shall be loaded in a manner calculated to develop as nearly as practicable, in theory, the working stresses contemplated by the design.

9.2.2 Provision shall be made for transmitting the load to the exposed portion of the column without unduly increasing the effective column length.

9.2.3 If the submitter and the testing body jointly so decide, the column shall be permitted to be subjected to 1¾ times its designed working load before the fire endurance test is undertaken.

9.2.4 Where the test permitted by 9.2.3 has been performed, it shall not be construed as having had a deleterious effect on the fire endurance test performance.

9.3 Conditions of Acceptance. The test shall be regarded as valid if the column sustains the applied load during the fire endurance test for a period equal to that required for the fire resistance rating desired.

Chapter 10 Alternative Test of Protection for Structural Steel Columns

10.1 Application. This test procedure shall not require column loading at any time and shall be permitted to be used at the discretion of the testing laboratory to evaluate steel column protection that is not required by design to carry any of the column load.

10.2 Size and Character of Specimen.

10.2.1 The size of the steel column used as a specimen shall be a true representation of the design, materials, and workmanship required for the fire resistance rating desired.

10.2.1.1 The protection shall be applied in accordance with the methods of standard field practice.

10.2.1.2 The length of the protected column shall be at least 8 ft (2.4 m).

10.2.1.3 The column shall be vertical during application of the protection and during the fire exposure.

10.2.2 The applied protection shall be restrained against longitudinal temperature expansion greater than that of the steel column by rigid steel plates or reinforced concrete attached to the ends of the steel column before the protection is applied.

10.2.3 The size of the plates or amount of concrete required by 10.2.2 shall be adequate to provide direct bearing for the entire transverse area of the protection.

10.2.4 The ends of the specimen, including the means for restraint, shall be provided with sufficient thermal insulation to prevent appreciable direct heat transfer from the furnace.

10.3 Temperature Measurement. The temperature of the steel in the column shall be measured by at least three thermocouples located at each of four levels as follows:

(1) The upper and lower levels shall be 2 ft (0.6 m) from the ends of the steel column
(2) The two intermediate levels shall be spaced equally.
(3) The thermocouples at each level shall be placed to measure significant temperatures of the component elements of the steel section.

10.4 Exposure to Fire. Throughout the fire endurance test, the specimen shall be exposed to fire on all sides for its full length.

10.5 Conditions of Acceptance. The test shall be considered to be valid if the transmission of heat through the protection during the period of fire exposure required for the fire resistance rating desired meets one of the following criteria:

(1) It does not raise the average (arithmetical) temperature of the steel at any one of the four levels above 1000°F (530°C).
(2) It does not raise the temperature above 1200°F (649°C) at any one of the measured points.

Chapter 11 Tests of Floor and Roof Assemblies

11.1 Application.

11.1.1 This test procedure shall apply to floor and roof assemblies with or without attached, furred, or suspended ceilings, and the underside of the specimen under test shall be exposed to fire.

11.1.2* The following two fire resistance ratings shall be determined for assemblies restrained against thermal expansion:

(1) A restrained assembly fire resistance rating based on the conditions of acceptance specified in Section 11.5(1) through (8)
(2) An unrestrained assembly fire resistance rating based on the conditions of acceptance specified in Section 11.6(1) and (2), in addition to Section 11.6(3), (4), (5), or (6)

11.1.3 One fire resistance rating shall be determined from tests of assemblies not restrained against thermal expansion based on the conditions of acceptance specified in Section 11.6(1) and (2).

11.1.4 Individual unrestrained fire resistance ratings shall be permitted to be determined for beams tested in accordance with this test method using the conditions of acceptance specified in Section 13.3(1), (2), or (3).

11.2 Size and Characteristics of Specimen.

11.2.1 The area exposed to fire shall be not less than 180 ft^2 (16.7 m^2), with neither dimension less than 12 ft (3.6 m).

11.2.2 Structural members, if a part of the construction under test, shall lie within the combustion chamber and shall have a side clearance of not less than 8 in. (203 mm) from the combustion chamber walls.

Copyright National Fire Protection Association
Provided by IHS under license with NFPA
No reproduction or networking permitted without license from IHS
Not for Resale

11.2.3 The specimen shall be installed in accordance with recommended fabrication procedures for the type of construction and shall be representative of the design for which a fire resistance rating is desired.

11.2.4 Where a restrained fire resistance rating is desired, specimens representing forms of construction in which restraint to thermal expansion occurs shall be reasonably restrained in the furnace.

11.3 Loading. Throughout the fire resistance test, a superimposed load shall be applied to the specimen to simulate a maximum load condition.

11.3.1 The maximum load condition shall be, as nearly as practicable, the maximum load allowed by the limiting condition of design under nationally recognized structural design criteria.

11.3.2 A fire endurance test shall be permitted to be conducted by application of a restricted load condition to the specimen that shall be identified for a specific load condition other than the maximum permitted load condition.

11.4 Temperature Measurement.

11.4.1 For specimens using structural members (e.g., beams, open-web steel joists) spaced at more than 4 ft (1.2 m) on center, the following criteria shall be met:

(1) The temperature of the steel in the structural members shall be measured by thermocouples at three or more sections spaced along the length of the members, with one section preferably located at midspan.
(2) In cases where the cover thickness is not uniform along the specimen length, at least one of the sections at which temperatures are measured shall include the point of minimum cover.

11.4.2 For specimens using structural members (e.g., beams, open-web steel joists) spaced at 4 ft (1.2 m) on center or less, the temperature of the steel in the structural members shall be measured by four thermocouples placed on each member, and the following criteria also shall be met:

(1) No more than four members shall be so instrumented.
(2) The thermocouples shall be placed at significant locations, such as at midspan, over joints in the ceiling, and over light fixtures.

11.4.3 For reinforced or prestressed concrete structural members, thermocouples shall be located on each of the tension-reinforcing elements unless there are more than eight such elements, in which case thermocouples shall be placed on eight elements selected to obtain representative temperatures of all the elements.

11.4.4* For steel structural members, four thermocouples shall be located at each section.

11.4.4.1 Where only four thermocouples are required on a member, the thermocouples shall be permitted to be distributed along the member at significant locations as specified in 11.4.2.

11.4.4.2 Two thermocouples shall be located on the bottom of the bottom flange or chord, one on the web at the center, and one on the top flange or chord.

11.4.5* For steel floor or roof units, four thermocouples shall be located as follows on each section, which shall equal the width of one unit:

(1) One located on the bottom plane of the unit at an edge joint
(2) One located on the bottom plane of the unit remote from the edge
(3) One located on a sidewall of the unit
(4) One located on the top plane of the unit

11.4.5.1 The thermocouples shall be applied, where practicable, to the surface of the units that are remote from fire and shall be spaced across the width of the unit.

11.4.5.2 Not more than four nor fewer than two sections shall be required to be instrumented as specified in 11.4.5 and 11.4.5.1 in each representative span.

11.4.5.3 The groups of four thermocouples shall be placed in representative locations.

11.5 Conditions of Acceptance — Restrained Assembly. In obtaining a restrained assembly fire resistance rating, the following conditions shall be met:

(1) The specimen shall sustain the applied load during the fire test exposure period without developing unexposed surface conditions that ignite cotton waste.
(2) The transmission of heat through the specimen during the fire test exposure period shall not raise the average temperature on its unexposed surface more than 250°F (140°C) above its initial temperature.
(3) For specimens using steel structural members (e.g., beams, open-web steel joists) spaced more than 4 ft (1.2 m) on center, the beams shall achieve a fire resistance rating on the basis of the temperature criteria specified in Section 11.6(3), (4), (5), or (6) for assembly ratings up to and including 1 hour.
(4) For specimens using steel structural members, as specified in Section 11.5(3) and tested for classifications greater than 1 hour, the temperature criteria of Section 11.6(3), (4), (5), or (6) shall apply for a period equal to one-half the period for the fire resistance rating of the assembly or 1 hour, whichever is greater.
(5) For specimens using steel structural members (e.g., beams, open-web steel joists) spaced 4 ft (1.2 m) or less on center, the assembly shall achieve a fire resistance rating on the basis of the temperature criteria specified in Section 11.6(4) for assembly fire resistance ratings up to and including 1 hour.
(6) For specimens using steel structural members, as specified in Section 11.5(5) and tested for fire resistance ratings greater than 1 hour, the temperature criteria of Section 11.6(4) shall apply for a period equal to one-half the period for the fire resistance rating of the assembly or 1 hour, whichever is greater.
(7) For specimens using conventionally designed concrete beams spaced more than 4 ft (1.2 m) on center, the assembly shall achieve a fire resistance rating on the basis of the temperature criteria specified in Section 11.6(5) for assembly fire resistance rating up to and including 1 hour.
(8) For specimens using conventionally designed concrete beams, as specified in Section 11.5(7) and tested for fire resistance rating greater than 1 hour, the temperature criteria of Section 11.6(5) shall apply for a period equal to one-half the period for the fire resistance rating of the assembly or 1 hour, whichever is greater.

Copyright National Fire Protection Association
Provided by IHS under license with NFPA
No reproduction or networking permitted without license from IHS
Not for Resale

11.6 Conditions of Acceptance — Unrestrained Assembly. In obtaining an unrestrained assembly fire resistance rating, the following conditions shall be met:

(1) The specimen shall sustain the applied load during the fire test exposure period without developing unexposed surface conditions that ignite cotton waste.
(2) The transmission of heat through the specimen during the fire test exposure period shall not raise the average temperature on its unexposed surface more than 250°F (140°C) above the specimen's initial temperature.
(3) For specimens using steel structural members (e.g., beams, open-web steel joists) spaced more than 4 ft (1.2 m) on center, the following criteria shall be met:
   (a) The temperature of the steel shall not exceed 1300°F (704°C) at any location during the fire test exposure period.
   (b) The average temperature recorded by four thermocouples at any section shall not exceed 1100°F (593°C) during the fire test exposure period.
(4) For specimens using steel structural members (e.g., beams, open-web steel joists) spaced 4 ft (1.2 m) or less on center, the average temperature recorded by all joist or beam thermocouples shall not exceed 1100°F (593°C) during the fire test exposure period.
(5) For specimens using conventionally designed concrete structural members (excluding cast-in-place concrete slabs having spans equal to or less than those tested), the average temperature of the tension steel at any section during the fire test exposure period shall not exceed the following:
   (a) 800°F (426°C) for cold-drawn prestressing steel
   (b) 1100°F (593°C) for reinforcing steel
(6) For specimens using steel floor or roof units intended for use in spans greater than those tested, the average temperature recorded by all thermocouples located on any one span of the floor or roof unit shall not exceed 1100°F (593°C) during the fire test exposure period.

Chapter 12 Tests of Loaded Restrained Beams

12.1 Application. An individual fire resistance rating of a restrained beam shall be permitted to be determined by this test procedure and shall be based on the conditions of acceptance specified in Section 12.4.

12.1.1 This fire resistance rating shall apply to a beam used with a floor or roof construction that has a comparable or greater capacity for heat dissipation from the beam than the floor or roof with which it is tested.

12.1.2 The fire resistance rating determined by this method shall not apply to beams smaller than those tested.

12.2 Size and Characteristics of Specimen. The test specimen shall be installed in accordance with the recommended fabrication procedures for the type of construction and shall be representative of the design for which the fire resistance rating is to be determined.

12.2.1 The length of beam exposed to the fire shall be not less than 12 ft (3.7 m), and the member shall be tested in its normal horizontal position.

12.2.2 A section of a representative floor or roof construction not more than 7 ft (2.1 m) wide, symmetrically located with reference to the beam, shall be permitted to be included with the test specimen and exposed to the fire from below.

12.2.3 The beam, including that part of the floor or roof element forming the complete beam as designed (such as composite steel or concrete construction), shall be restrained against longitudinal thermal expansion in a manner simulating the restraint in the construction represented.

12.2.4 Only that part of the perimeter of the floor or roof element specimen that forms part of a beam as designed shall be supported or restrained.

12.3 Loading.

12.3.1 Throughout the fire endurance test, a superimposed load shall be applied to the specimen.

12.3.2 The superimposed load, together with the weight of the specimen, shall be, as nearly as practicable, the maximum theoretical dead and live loads permitted by nationally recognized design standards.

12.4 Conditions of Acceptance. The following conditions shall be met:

(1) The specimen shall sustain the applied load during the fire test exposure period.
(2) The specimen shall achieve a fire resistance rating on the basis of the temperature criteria specified in Section 11.6(3), (4), or (5) equal to one-half the period for the fire resistance rating of the assembly or 1 hour, whichever is greater.

Chapter 13 Alternative Procedure for Loaded Beams

13.1 Application. Individual unrestrained fire resistance ratings shall be permitted to be determined for beams tested as part of a floor or roof assembly as described in Sections 11.1 through 11.4 (except 11.1.3) or for restrained beams tested in accordance with the procedure described in Sections 12.1 through 12.3.

13.1.1 These fire resistance ratings shall apply to a beam used with a floor or roof construction that has a comparable or greater capacity for heat dissipation from the beam than the floor or roof with which it is tested.

13.1.2 The fire resistance ratings determined by this method shall not apply to beams smaller than those tested.

13.2 Temperature Measurement.

13.2.1 The temperature of the steel in structural members shall be measured by thermocouples at three or more sections spaced along the length of the members, with one section preferably located at midspan.

13.2.2 In cases where cover thickness is not uniform along the specimen length, at least one of the sections at which temperatures are measured shall include the point of minimum cover.

13.2.3 For steel beams, four thermocouples shall be located at each section as follows:

(1) Two located on the bottom of the bottom flange
(2) One located on the web at the center
(3) One located on the bottom of the top flange

--`,,```,,-`-`,,`,,`,`,,`---

Copyright National Fire Protection Association
Provided by IHS under license with NFPA
No reproduction or networking permitted without license from IHS
Not for Resale

13.2.4 For reinforced or prestressed concrete structural members, thermocouples shall be located on each of the tension-reinforcing elements unless there are more than eight such elements, in which case thermocouples shall be placed on eight elements selected to obtain representative temperatures of all the elements.

13.3 Conditions of Acceptance. In obtaining an unrestrained beam fire resistance rating, the following conditions shall be met:

(1) The specimen shall sustain the applied load during the fire test exposure period.
(2) For steel beams, the following criteria shall be met:
   (a) The temperature of the steel shall not exceed 1300°F (704°C) at any location during the fire test exposure period.
   (b) The average temperature recorded by four thermocouples at any section shall not exceed 1100°F (593°C) during the exposure period.
(3) For conventionally designed concrete beams, the average temperature of the tension steel at any section during the fire test exposure shall not exceed the following:
   (a) 800°F (426°C) for cold-drawn prestressing steel
   (b) 1100°F (593°C) for reinforcing steel

Chapter 14 Alternative Test of Protection for Solid Structural Steel Beams and Girders

14.1 Application.

14.1.1 Where the loading required in Section 11.3 is not feasible, this alternative test procedure shall be permitted to be used to evaluate the protection of steel beams and girders without application of design load, provided that the protection is not required by design to function structurally in resisting applied loads.

14.1.2 The conditions of acceptance of this alternative test shall not apply to tests performed under design load as provided in tests for floors and roofs in Sections 11.2, 11.5, and 11.6.

14.2 Size and Character of Specimen.

14.2.1 The size of the steel beam or girder shall be a true representation of the design, materials, and workmanship required for the fire resistance rating desired.

14.2.1.1 The protection shall be applied in accordance with the methods of field practice, and the projection below the ceiling, if any, shall be representative of the conditions of intended use.

14.2.1.2 The length of the beam or girder exposed to the fire shall be not less than 12 ft (3.7 m), and the member shall be tested in a horizontal position.

14.2.1.3 A section of a representative floor construction not less than 5 ft (1.5 m) wide, symmetrically located with reference to the beam or girder and extending its full length, shall be included in the test assembly and exposed to fire from below.

14.2.1.4 The rating of performance shall not apply to beams or girders smaller than those tested.

14.2.2 The applied protection shall be restrained against longitudinal expansion greater than that of the steel beam or girder by rigid steel plates or reinforced concrete attached to the ends of the specimen before the protection is applied.

14.2.3 The ends of the specimen, including the means for restraint, shall be provided with sufficient thermal insulation to prevent appreciable direct heat transfer from the furnace to the unexposed ends of the specimen or from the ends of the specimen to the outside of the furnace.

14.3 Temperature Measurement. The temperature of the steel in the beam or girder shall be measured with not less than four thermocouples.

14.3.1 The thermocouples shall be located at each of four sections equally spaced along the length of the beam, symmetrically disposed, and not nearer than 2 ft (0.6 m) from the inside face of the furnace.

14.3.2 The thermocouples at each section shall be placed symmetrically so as to measure significant temperatures of the component elements of the steel section.

14.4 Conditions of Acceptance. The test shall be accepted as valid if the transmission of heat through the protection during the period of fire exposure required for the fire resistance rating desired meets one of the following:

(1) It does not raise the average (arithmetical) temperature of the steel at any one of the four sections above 1000°F (538°C).
(2) It does not raise the temperature above 1200°F (649°C) at any one of the measured points.

Chapter 15 Performance of Protective Membranes in Wall, Partition, Floor, or Roof Assemblies

15.1 Application.

15.1.1 Where the thermal protection afforded by membrane elements in wall, partition, floor, or roof assemblies is to be determined, the nonstructural performance of protective membranes shall be obtained by following the procedure outlined in Sections 15.2 through 15.4.

15.1.2 The performance of protective membranes is supplementary information only and shall not be used as a substitute for the fire resistance rating determined by Chapters 7 through 14.

15.2 Characteristics and Size of Sample.

15.2.1 The characteristics of the sample shall conform to 5.1.1.

15.2.2 The size of the sample shall conform to one of the following:

(1) Section 7.1, for bearing walls and partitions
(2) Section 8.1, for nonbearing walls and partitions
(3) Subsection 11.2.1, for floors or roofs

15.3 Temperature Performance of Protective Membranes.

15.3.1 The temperature performance of protective membranes shall be measured with thermocouples, the measuring junctions of which shall be in intimate contact with the exposed surface of the elements being protected.

15.3.1.1 The diameter of the wires used to form the thermojunction shall not be greater than the thickness of sheet metal framing or panel members to which they are attached, and in no case shall they be greater than 18 AWG gauge [0.040 in. (1.02 mm)].

Copyright National Fire Protection Association
Provided by IHS under license with NFPA
No reproduction or networking permitted without license from IHS
Not for Resale

15.3.1.2 The lead shall be electrically insulated with heat-resistant and moisture-resistant coatings.

15.3.2 For each class of elements protected, temperature readings shall be taken at not fewer than five representative points.

15.3.2.1 None of the thermocouples shall be located nearer to the edges of the test assembly than 12 in. (305 mm).

15.3.2.2 In those cases in which there exists an element or feature of the construction that is not otherwise represented in the test assembly, thermocouples shall be permitted to be located closer to the edges of the test assembly than 12 in. (305 mm).

15.3.2.3 None of the thermocouples shall be located opposite, on top of, or adjacent to fasteners such as screws, nails, or staples where such locations are excluded for thermocouple placement on the unexposed surface of the test assembly as detailed in 4.3.2.

15.3.3 Thermocouples shall be located to obtain representative information on the temperature of the interface between the exposed membrane and the substratum or element being protected.

15.3.4 Temperature readings shall be taken at intervals not exceeding 1 minute for the duration of the test.

15.4 Conditions of Performance. Unless otherwise specified, the performance of protective membranes shall be considered to be the time at which the following conditions occur:

(1) The average temperature rise of any set of thermocouples for each class of element protected is more than 250°F (140°C) above the initial temperature.
(2) The temperature rise of any one thermocouple of the set for each class of element protected is more than 325°F (180°C) above the initial temperature.

Chapter 16 Report of Results

16.1 Fire Resistance Rating as Determined by Test.

16.1.1 Results shall be reported in accordance with the performance specifications in the tests prescribed in these methods.

16.1.1.1 The time of resistance shall be expressed as the nearest integral minute.

16.1.1.2 Reports shall include observations of significant details of the behavior of the material or construction during the test and after the furnace fire is cut off, including information on the following:

(1) Deformation
(2) Spalling
(3) Cracking
(4) Burning of the specimen or its component parts
(5) Continued flaming
(6) Production of smoke

16.1.2 Reports of tests involving wall, floor, beam, or ceiling constructions in which restraint is provided against expansion, contraction, or rotation of the construction shall describe the method used to provide this restraint.

16.1.3 Reports of tests in which other than maximum load conditions *(see Section 11.3)* are imposed shall fully define the conditions of loading used in the test and shall be designated in the title of the test report as a restricted load condition.

16.1.4* Where the indicated resistance period is ½ hour or more, as determined by the average or maximum temperature rise on the unexposed surface or within the test specimen or by failure under load, an adjustment shall be made for variation of the furnace exposure from that prescribed.

16.1.4.1 In those cases where the adjustment will affect the fire resistance rating, it shall be made using the following two consecutive steps:

(1) Multiplying the indicated resistance period by two-thirds of the difference in the area between the curve of the average furnace temperature and the standard curve for the first three-fourths of the period
(2) Dividing the product determined in 16.1.4.1(1) by the area between the standard curve and a baseline of 68°F (20°C) for the same portion of the indicated period

16.1.4.2 The area specified in 16.1.4.1(2) shall be increased by 54°F-hr or 30°C-hr (3240°F-min or 1800°C-min) to compensate for the thermal lag of the furnace thermocouples during the first part of the test.

16.1.4.3 For fire exposure that occurs during the test that is higher than standard, the indicated resistance period shall be increased by the amount of the correction and shall similarly be decreased for fire exposure below standard.

16.1.5 Asymmetrical wall assemblies shall be permitted to be tested as follows:

(1) Either side exposed to the fire, with the report indicating the side so exposed
(2) Both sides tested, with the report indicating the fire resistance rating applicable to each side

16.2 Test of Floor and Roof Assemblies.

16.2.1 The fire resistance rating of a restrained assembly shall be reported as that developed by applying the conditions of acceptance specified in Section 11.5(1) through (5).

16.2.2 The fire resistance rating of an unrestrained assembly shall be reported as that determined by applying the conditions of acceptance to a specimen tested in accordance with this test procedure as specified in Section 11.6(1) and (2) and, where applicable, Section 11.6(3) through (5), or Section 11.6(6).

16.3 Performance of Protective Membranes.

16.3.1 The protective membrane performance for each class of element being protected shall be reported to the nearest integral minute.

16.3.2 The test report shall identify each class of element being protected and shall show the location of each thermocouple.

16.3.3 The test report shall show the temperature–time data recorded for each thermocouple and the average temperature for the set of thermocouples on each element being protected.

16.3.4 The test report shall record any visual observations that are pertinent to the performance of the protective membrane.

Copyright National Fire Protection Association
Provided by IHS under license with NFPA
No reproduction or networking permitted without license from IHS
Not for Resale

16.4 Tests of Load-Bearing Assemblies. Reports of tests in which loading is used shall describe the following:

(1) How the applied load was calculated
(2) Design standard used
(3) Governing stress in each structural member (e.g., bending, shear)
(4) Details of the system used to apply the load
(5) Time of load application relative to the start and finish of the test

Annex A Explanatory Material

Annex A is not a part of the requirements of this NFPA document but is included for informational purposes only. This annex contains explanatory material, numbered to correspond with the applicable text paragraphs.

A.1.1 The performance of walls, columns, floors, and other building members under fire exposure conditions is an issue of major importance in ensuring construction that is safe and not a menace to neighboring structures or the public. This factor is recognized by the codes of many authorities, municipal and otherwise.

It is important to create a balance among the many units in a single building and in buildings of like character and use in a community and to promote uniformity in the requirements of the various authorities throughout the country. Therefore, it is necessary that the fire-resistive properties of materials and assemblies be measured and specified in accordance with a common standard and expressed in terms that are applicable to a wide variety of materials, situations, and conditions of exposure.

These test methods are such a standard. They prescribe a uniform exposing fire of controlled extent and severity. Performance is defined as the period of resistance to standard exposure that elapses before the first critical point in behavior is observed. Results are reported in units in which field exposures can be judged and expressed.

The methods are cited as the "Standard Fire Tests," and the performance or exposure is expressed as "2 hr," "6 hr," "½ hr," and so forth. Where a factor of safety exceeding that inherent in the test conditions is desired, a proportional increase should be made in the specified fire resistance rating.

A.1.2.3 These methods prescribe a standard fire exposure for comparing the performance of building construction assemblies. Application of these test results to predict the performance of actual building construction requires careful evaluation of test conditions.

A.3.3.1 Fire Resistance. As applied to elements of buildings, fire resistance is characterized by the ability to confine a fire or to continue to perform a given structural function or both. More specific examples of this ability include retention of stability, integrity, or thermal insulation. The term *fire endurance* is often used with the same meaning as *fire resistance*.

A.3.3.2 Fire Resistance Rating. Once a measure of time is obtained for fire resistance using NFPA 251, that result is the fire resistance rating. The term *fire endurance classification* has been used with the same meaning as *fire resistance rating*.

A.4.1.1 For a more precise definition of the temperature–time curve, see Annex B.

A.4.2 The following paragraphs provide guidance on the desired characteristics of instrumentation for recording the flow of fuel to the furnace burners. Fuel flow data are useful for a furnace heat balance analysis, for measuring the effect of furnace or control changes, and for comparing the performance of assemblies of different properties in the fire endurance test.

The integrated (cumulative) flow of gas (or other fuel) to the furnace burners should be recorded at 10 minutes, 20 minutes, 30 minutes, and at least every 30 minutes thereafter. The total gas (or other fuel) consumed during the test period also should be determined. A recording flowmeter has advantages over periodic readings on an instantaneous or totalizing flowmeter. A measuring and recording system should be selected to provide flow rate readings accurate to within ±5 percent.

The type of fuel, its higher (gross) heating value, and the fuel flow [corrected to standard conditions of 60°F (16°C) and 30.0 in. Hg] as a function of time should be reported.

A.4.2.1 A typical thermocouple assembly that meets specified time constant requirements can be fabricated by fusion-welding the twisted ends of 18 AWG Chromel®-Alumel® wires, mounting the leads in porcelain insulators, and inserting the assembly so the thermocouple bead is ½ in. (13 mm) from the sealed end of a standard weight nominal ½ in. (13 mm) iron, steel, or Inconel® pipe. The time constants for this assembly and for several other thermocouple assemblies were measured in 1976. The time constant is also calculated from knowledge of the thermocouple assembly's physical and thermal properties.

A.4.3.1 Under certain conditions, it is unsafe or impracticable to use thermometers.

For the purpose of testing roof assemblies, the unexposed surface is defined as the surface exposed to ambient air.

Additional information on refractory pads can be found in Section C.1.

A.4.3.1.1(5) Modified Brinell values of hardness are obtained from the following equation:

$$\text{Hardness} = \frac{2.24}{y}$$

where:
y = the measured indentation in inches

A.4.4.5.2 This is equivalent to a 3-minute running average.

A.5.2.6 A recommended method for determining the relative humidity in a hardened concrete specimen with electric sensing elements is described in Annex I of Menzel, "A Method for Determining the Moisture Condition of Hardened Concrete in Terms of Relative Humidity." A similar procedure with electric sensing elements can be used to determine the relative humidity in fire test specimens made with other materials.

With wood constructions, the moisture meter based on the electrical resistance method can be used, where appropriate, as an alternative to the relative humidity method to indicate when wood has attained the proper moisture control. Electrical methods are described in the U.S. Department of Agriculture's "Wood Handbook of the Forest Products Laboratory" (pp. 320, 321).

Copyright National Fire Protection Association
Provided by IHS under license with NFPA
No reproduction or networking permitted without license from IHS
Not for Resale

The relationships between relative humidity and moisture content are illustrated by graphs in the "Wood Handbook of the Forest Products Laboratory" (Figure 23, p. 327). They indicate that wood has a moisture content of 13 percent at a relative humidity of 70 percent for temperatures of 70°F to 80°F (21°C to 27°C).

A.5.2.8 If the moisture condition of the fire test assembly is likely to change drastically from the sample taken 72 hours prior to this test, the sample should be taken not later than 24 hours prior to the test.

A.7.2 The choice of loading depends on the intended use and whether the load on the exposed side will be transferred to the unexposed side after the exposed side has failed.

If in the intended use the load from the structure above is supported by both walls as a unit and would be or is transferred to the unexposed side in the event of collapse of the exposed side, both walls should be loaded for the test by a single unit.

If in the intended use the load from the structure above each wall is supported by each wall separately, the walls should be loaded separately for the test by separate load sources.

In tests conducted with the walls loaded separately, the condition of acceptance requiring the walls to maintain the applied load is based on the time at which the first wall fails to sustain the load.

If the intended use of the construction system being tested involves situations of both loading conditions described above, the walls should be loaded separately for the test by separate load sources.

A.11.1.2 Annex E should be consulted for guidance in determining the conditions of thermal restraint that apply to floor and roof constructions and individual beams in actual building construction.

A.11.4.4 Figure A.11.4.4 provides two examples of thermocouple distribution at each section.

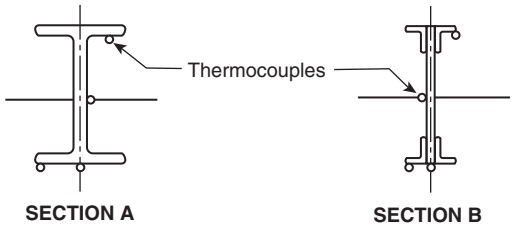

FIGURE A.11.4.4 Examples of Thermocouple Distribution.

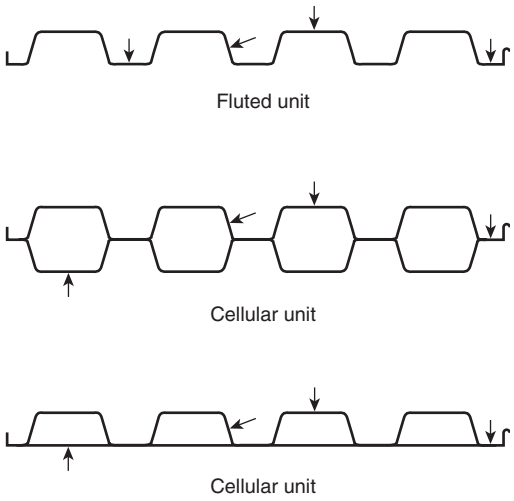

FIGURE A.11.4.5 Typical Locations of Thermocouples.

A.11.4.5 Figure A.11.4.5 provides examples of typical thermocouple locations for a unit section.

A.16.1.4 The correction can be expressed by the following formula:

$$C = \frac{2I(A - A_S)}{3(A_S + L)}$$

where:

C = correction in the same units as I
I = indicated fire resistance period
A = area under the curve of the indicated average furnace temperature for the first three-fourths of the indicated period
A_s = area under the standard furnace curve for the same part of the indicated period
L = lag correction in the same units as A and A_s [54°F-hr or 30°C-hr (3240°F-min or 1800°C-min)]

Annex B Operating Criteria for Fire Tests

This annex is not a part of the requirements of this NFPA document but is included for informational purposes only.

B.1 Temperature–Time Curve. Control of fire tests for testing of fire-rated assemblies should be in done as demonstrated by the standard temperature–time curve as highlighted in Table B.1.

--`,,```,,-`-`,,`,,`,`,,`---

Copyright National Fire Protection Association
Provided by IHS under license with NFPA
No reproduction or networking permitted without license from IHS
Not for Resale

Table B.1 Standard Temperature–Time Curve for Control of Fire Tests

Time (hr:min)	Temperature (°F)	Area Above 68°F Base		Temperature (°C)	Area Above 20°C Base	
		°F-min	°F-hr		°C-min	°C-hr
0:00	68	0	0	20	0	0
0:05	1,000	2,330	39	538	1,290	22
0:10	1,300	7,740	129	704	4,300	72
0:15	1,399	14,150	236	760	7,860	131
0:20	1,462	20,970	350	795	11,650	194
0:25	1,510	28,050	468	821	15,590	260
0:30	1,550	35,360	589	843	19,650	328
0:35	1,584	42,860	714	862	23,810	397
0:40	1,613	50,510	842	878	28,060	468
0:45	1,638	58,300	971	892	32,390	540
0:50	1,661	66,200	1,103	905	36,780	613
0:55	1,681	74,220	1,287	916	41,230	687
1:00	1,700	82,330	1,372	927	45,740	762
1:05	1,718	90,540	1,509	937	50,300	838
1:10	1,735	98,830	1,647	946	54,910	915
1:15	1,750	107,200	1,787	955	59,560	993
1:20	1,765	115,650	1,928	963	64,250	1,071
1:25	1,779	124,180	2,070	971	68,990	1,150
1:30	1,792	132,760	2,213	978	73,760	1,229
1:35	1,804	141,420	2,357	985	78,560	1,309
1:40	1,815	150,120	2,502	991	83,400	1,390
1:45	1,826	158,890	2,648	996	88,280	1,471
1:50	1,835	167,700	2,795	1,001	93,170	1,553
1:55	1,843	176,550	2,942	1,006	98,080	1,635
2:00	1,850	185,440	3,091	1,010	103,020	1,717
2:10	1,862	203,330	3,389	1,017	112,960	1,882
2:20	1,875	221,330	3,689	1,024	122,960	2,049
2:30	1,888	239,470	3,991	1,031	133,040	2,217
2:40	1,900	257,720	4,295	1,038	143,180	2,386
2:50	1,912	276,110	4,602	1,045	153,390	2,556
3:00	1,925	294,610	4,910	1,052	163,670	2,728
3:10	1,938	313,250	5,221	1,059	174,030	2,900
3:20	1,950	332,000	5,533	1,066	184,450	3,074
3:30	1,962	350,890	5,848	1,072	194,940	3,249
3:40	1,975	369,890	6,165	1,079	205,500	3,425
3:50	1,988	389,030	6,484	1,086	216,130	3,602
4:00	2,000	408,280	6,805	1,093	226,820	3,780
4:10	2,012	427,670	7,128	1,100	237,590	3,960
4:20	2,025	447,180	7,453	1,107	248,430	4,140
4:30	2,038	466,810	7,780	1,114	259,340	4,322
4:40	2,050	486,560	8,110	1,121	270,310	4,505
4:50	2,062	506,450	8,441	1,128	281,360	4,689
5:00	2,075	526,450	8,774	1,135	282,470	4,874
5:10	2,088	546,580	9,110	1,142	303,660	5,061
5:20	2,100	566,840	9,447	1,149	314,910	5,248
5:30	2,112	587,220	9,787	1,156	326,240	5,437
5:40	2,125	607,730	10,129	1,163	337,630	5,627
5:50	2,138	628,360	10,473	1,170	349,090	5,818
6:00	2,150	649,120	10,819	1,177	360,620	6,010
6:10	2,162	670,000	11,167	1,184	372,230	6,204
6:20	2,175	691,010	11,517	1,191	383,900	6,398
6:30	2,188	712,140	11,869	1,198	395,640	6,594
6:40	2,200	733,400	12,223	1,204	407,450	6,791
6:50	2,212	754,780	12,580	1,211	419,330	6,989

(continues)

Copyright National Fire Protection Association
Provided by IHS under license with NFPA
No reproduction or networking permitted without license from IHS
Not for Resale

Table B.1 *Continued*

Time (hr:min)	Temperature (°F)	Area Above 68°F Base		Temperature (°C)	Area Above 20°C Base	
		°F-min	°F-hr		°C-min	°C-hr
7:00	2,225	776,290	12,938	1,218	431,270	7,188
7:10	2,238	797,920	13,299	1,225	443,290	7,388
7:20	2,250	819,680	13,661	1,232	455,380	7,590
7:30	2,262	841,560	14,026	1,239	467,540	7,792
7:40	2,275	863,570	14,393	1,246	479,760	7,996
7:50	2,288	885,700	14,762	1,253	492,060	8,201
8:00	2,300	907,960	15,133	1,260	504,420	8,407

Annex C Recommendations for Thermocouple Pads

This annex is not a part of the requirements of this NFPA document but is included for informational purposes only.

C.1 Refractory Fiber Pads. Specific product information is provided in this annex for informational purposes only and has not been independently verified, certified, or endorsed by NFPA or any of its technical committees.

C.1.1 Comparative fire tests have demonstrated that a refractory fiber material designated Ceraform 126®, placed with the softer surfaces in contact with the thermocouple, can be substituted for the previously specified asbestos pad where the distortion of the unexposed face of the sample is minimal. Ceraform 126® is a registered trade name of Manville Specialty Products Group, P.O. Box 5108, Denver, CO 80217.

C.1.2 The pads are relatively rigid and should not be used on surfaces subject to sharp distortions or discontinuities during the test.

C.2 Properties of Ceraform 126. The properties of Ceraform 126® material are as follows:

(1) Length and width, 6 in. ± ⅛ in. (152 mm ± 3 mm)
(2) Thickness, 0.375 in. ± 0.063 in. (9.5 mm ± 1.6 mm), with measurement made under the light load of a ½ in. (13 mm) diameter pad of a dial micrometer gauge
(3) Thermal conductivity [at 150°F (66°C)], 0.37 Btu·in./hr·ft^2·°F ± 0.03 Btu·in./hr·ft^2·°F (0.053 W/m·K ± 0.004 W/m·K)
(4) Pads shaped by wetting, forming, and then drying to constant weight to provide complete contact on sharply contoured surfaces

C.3 Supporting Data. Supporting data are available from the American Society for Testing and Materials, 100 Barr Harbor Drive, West Conshohocken, PA 19428-2959. Request RR:E05-1004.

Annex D Report Information

This annex is not a part of the requirements of this NFPA document but is included for informational purposes only.

D.1 Sample Report Form. See Figure D.1 for a sample of a report form cover sheet.

D.2 Description of Laboratory Test Facility. Describe items such as the furnace, restraining frame, and details of end conditions, including wedges, and bearing.

NFPA 251 (2006 edition)
Standard Fire Endurance Test

Laboratory: _____

Project number: _____

Fire endurance time: _____

Construction: _____

Date tested: _____

Sponsor: _____

Material: _____

Material: _____

Maximum load condition or restricted load conditions (as the conditions of the test dictate): _____

[Identify if test is part of a research program]

[Add table of contents]

FIGURE D.1 Sample Report Cover Sheet.

D.2.1 If construction is to be tested under load, indicate how the load is applied and controlled (provide loading diagram). Indicate whether the load is a maximum load condition or a restricted load condition, and, for either condition, report the specific loads and the basis for limitation, such as bending stress, and shear. A restricted load condition is reported as a percentage of the maximum load condition.

D.2.2 If construction is to be tested as non-load-bearing, indicate whether the frame is rigid or moves during the test, or whether the test is for temperature rise only.

D.3 Description of All Materials. Describe type, size, class, strength, densities, trade name, and any additional data necessary to define materials. The testing laboratory should indicate whether materials meet NFPA standards by markings, by statement of sponsor, or by physical or chemical test by the testing laboratory.

D.4 Description of Test Assembly. The following information should be provided:

(1) Size of test specimen
(2) Details of structural design, including safety factors of all structural members in test assembly
(3) Plan, elevation, principal cross section, and other sections as needed for clarity
(4) Details of attachment of test panel in frame

--`,,```,-`-`,,`,,`,`,,`---
Copyright National Fire Protection Association
Provided by IHS under license with NFPA
No reproduction or networking permitted without license from IHS
Not for Resale

(5) Location of thermocouples, deflection points, and other items for test
(6) Description of general ambient conditions for all of the following times:
  (a) Time of construction
  (b) During curing (time from construction to test)
  (c) Time of test

D.5 Description of Test. The following information should be reported:

(1) Temperature at start of test and every 1 minute thereafter
(2) If charts are included in report, clear indications of time and temperature for all of the following:
  (a) Furnace space
  (b) Unexposed surface
  (c) Protected framing members as stipulated in this standard
(3) Temperature observations that are useful but not required by this standard, documented in the annex to the report and including the following:
  (a) Temperatures on the face of framing members in back of protection
  (b) Other temperatures required by various building codes
(4) Furnace pressure at start of test and every 1 minute thereafter
(5) Deflections every 5 minutes for the first 15 minutes of the test and during the last hour with a report every 10 minutes in between
(6) Appearance of exposed face as follows:
  (a) Every 15 minutes
  (b) When any noticeable development occurs, including cracking, buckling, flaming, smoking, and loss of material, with details and time
  (c) At end of the test, including items such as amount of dropout, condition of fasteners, and sag
(7) Appearance of unexposed face as follows:
  (a) Every 15 minutes
  (b) When any noticeable development occurs, including cracking, smoking, and buckling, with details and time
  (c) At end of test
(8) Time of failure caused by the following:
  (a) Temperature rise
  (b) Failure to carry load
  (c) Passage of flame, heat, and smoke

D.6 Hose Stream Test. If a hose stream test is required, repeat appropriate parts of Sections D.2 and D.4. If failure occurs in the hose stream test, provide a description.

D.7 Official Comments. The following information should be included:

(1) Statement to the effect that the construction is a true representation of field construction or, where construction does not represent typical field construction, notation of deviations
(2) If construction is asymmetrical (different details on each face), specification of which face is exposed to the fire, with comments on fire resistance from opposite side
(3) Comments on fire test

D.8 Summary of Results. A summary of results should include the following:

(1) Endurance time
(2) Nature of failure
(3) Hose stream test results

D.9 List of Official Observers. Provide names, titles, and signatures of responsible persons.

D.10 Annex. Include in the annex all data not specifically required by the test standard but useful to a better understanding of the test results. Special observations for building code approvals should be included in the annex.

D.11 Photographs. Photographs should be used to show items not covered in a report or to clarify information and should include the following:

(1) Assembly in construction
(2) Exposed face prior to fire test
(3) Unexposed face at start of endurance test, including recording equipment where possible
(4) Unexposed face at end of fire endurance test
(5) Exposed face at end of fire endurance test
(6) Unexposed face at end of fire exposure before hose test
(7) Exposed face at end of fire exposure before hose test
(8) Exposed face after hose stream test
(9) Unexposed face after hose stream test

D.12 Other Pertinent Information. The following should be included:

(1) Detailed drawing of test assembly
(2) Photographs *[see Section D.11(1), (4), (8), and (9)]* for every test report

Annex E Guide for Determining Conditions of Restraint for Floor and Roof Assemblies and for Individual Beams

This annex is not a part of the requirements of this NFPA document but is included for informational purposes only.

E.1 Introduction. The revisions adopted in 1970 introduced, for the first time in the history of this standard, the concept of fire resistance ratings based on two conditions of support: restrained and unrestrained. As a result, most specimens are fire tested in a manner that seeks to derive those two fire resistance ratings.

E.1.1 A restrained condition in fire tests, as used in this method, is one in which expansion at the supports of a load-carrying element resulting from the effects of fire is resisted by forces external to the element. An unrestrained condition is one in which the load-carrying element is free to expand and rotate at its supports.

E.1.2 It is recognized that there can be some difficulty in determining the condition of restraint that is to be anticipated at elevated temperatures in actual structures. Until a more satisfactory method is developed, it is recommended that all construction be classified temporarily as either restrained or unrestrained. This fire resistance rating enables the architect, engineer, or building official to correlate the fire resistance rating, based on conditions of restraint, with the construction type under consideration.

E.1.3 For the purpose of this annex, restraint in buildings is defined as follows: Floor and roof assemblies and individual beams in buildings are considered restrained where the surrounding or supporting structure is capable of resisting substantial thermal expansion throughout the range of

Copyright National Fire Protection Association
Provided by IHS under license with NFPA
No reproduction or networking permitted without license from IHS
Not for Resale

anticipated elevated temperatures. Construction not complying with this definition is assumed to be free to rotate and expand and therefore is considered unrestrained.

E.1.4 The definition of restraint in buildings specified in E.1.3 necessitates the exercise of engineering judgment to determine what constitutes restraint to substantial thermal expansion. Restraint can be provided by the lateral stiffness of supports for floor and roof assemblies and intermediate beams forming part of the assembly. In order to develop restraint, connections have to adequately transfer thermal thrusts to such supports. The rigidity of adjoining panels or structures should be considered in assessing the capability of a structure to resist thermal expansion. Continuity, such as that occurring in beams acting continuously over more than two supports, induces rotational restraint, which usually adds to the fire resistance of structural members.

E.1.5 Table E.1.5 lists the common types of constructions and whether they are restrained or unrestrained. These fire resistance ratings, as well as the philosophy expressed in A.1.1, are helpful in determining the less common types of construction.

Table E.1.5 Construction Classifications, Restrained and Unrestrained

Classification	Restrained or Unrestrained
I. Wall Bearing	
Single span and simply supported end spans of multiple bays*:	
(1) Open-web steel joists or steel beams supporting concrete slab, precast units, or metal decking	Unrestrained
(2) Concrete slabs, precast units, metal decking	Unrestrained
Interior spans of multiple bays:	
(1) Open-web steel joists, steel beams, or metal decking supporting continuous concrete slab	Restrained
(2) Open-web steel joists or steel beams supporting precast units or metal decking	Unrestrained
(3) Cast-in-place concrete slab systems	Restrained
(4) Precast concrete where potential thermal expansion is resisted by adjacent construction†	Restrained
II. Steel Framing	
(1) Steel beams welded, riveted, or bolted to the framing members	Restrained
(2) All types of cast-in-place floor and roof systems (such as beams-and-slabs, flat slabs, pan joists, and waffle slabs) in which floor or roof system is secured to framing members	Restrained
(3) All types of prefabricated floor or roof systems in which structural members are secured to framing members and potential thermal expansion of the floor or roof system is resisted by framing system or adjoining floor or roof construction†	Restrained
III. Concrete Framing	
(1) Beams securely fastened to the framing members	Restrained
(2) All types of cast-in-place floor or roof systems (such as beams-and-slabs, flat slabs, pan joists, and waffle slabs) where floor system is cast with framing members	Restrained
(3) Interior and exterior spans of precast systems with cast-in-place joints resulting in restraint equivalent to that which exists in III(1)	Restrained
(4) All types of prefabricated floor or roof systems in which structural members are secured to such systems and the potential thermal expansion of floor or roof system is resisted by framing system or adjoining floor or roof construction†	Restrained
IV. Wood Construction	
All types	Unrestrained

*Floor and roof systems can be considered restrained where they are tied to walls with or without tie beams, the walls being designed and detailed to resist thermal thrust from the floor or roof system.

†Resistance to potential thermal expansion is considered to be achieved where the following criteria are met:

(1) Continuous structural concrete topping is used.

(2) The space between the ends of precast units or between the ends of the units and the vertical face of supports is filled with concrete or mortar.

(3) The space between the ends of precast units and the vertical faces of supports or between the ends of solid or hollow core slab units does not exceed 0.25 percent of the length for normal-weight concrete members or 0.1 percent of the length for structural lightweight concrete members.

E.1.6 The foregoing methods of establishing the presence or absence of restraint according to type and detail of construction are considered to be temporary but necessary for the determination of dual fire resistance ratings. It is anticipated that methods for realistically predetermining the degree of restraint applicable to a particular fire resistance rating will be developed soon.

Annex F Method of Correcting Fire Endurance for Concrete Slabs Determined by Unexposed Surface Temperature Rise for Nonstandard Moisture Content

This annex is not a part of the requirements of this NFPA document but is included for informational purposes only.

F.1 Scope.

F.1.1 The standard fire endurance is the time determined by the unexposed surface temperature rise of a test specimen at a standard moisture level.

F.1.2 This annex provides a procedure for correction of the fire endurance of unprotected vertical or horizontal slabs (solid or hollow) made from essentially inorganic building materials and

Copyright National Fire Protection Association
Provided by IHS under license with NFPA
No reproduction or networking permitted without license from IHS
Not for Resale

conditioned on both sides, where moisture content at the time of test is other than at a standard moisture level.

F.1.3 Among the common inorganic building materials, only the hydrated Portland cement products can hold (after due conditioning in accordance with Section 5.2) sufficient amounts of moisture to affect the result of the fire test significantly. Consequently, correcting the experimental fire endurance of constructions containing less than 5 percent volume of Portland cement paste is not necessary.

F.2 Symbols. The symbols used in this annex are defined as follows:

A = factor characterizing the drying conditions *[see Table F.2(a)]*
b = factor characterizing the permeability of the specimen *[see Table F.2(b)]*
FE = fire endurance of specimen (hr)
m = moisture content in volume fraction [ft^3/ft^3 (cm^3/cm^3)]
m_a = average moisture content of test specimen [ft^3/ft^3 (cm^3/cm^3)]
m_c = average moisture content of cement paste [ft^3/ft^3 (cm^3/cm^3)]
m_e = nominal equilibrium moisture content of cement paste for a given relative humidity [ft^3/ft^3 (cm^3/cm^3)] *[see Table F.2(c)]*
m_{es} = equilibrium moisture content of cement paste at the standard relative humidity level [ft^3/ft^3 (cm^3/cm^3)] *[see Table F.2(c)]*
m_s = average moisture content of a standard conditioned concrete specimen of same concrete and cement paste volume as the test specimen (%)
RH = relative humidity (%)
v = volume fraction of cement paste [ft^3/ft^3 (cm^3/cm^3)]

F.3 Calculation of Moisture Content.

F.3.1 The average moisture content *(m_a)* is the volume fraction of moisture [ft^3/ft^3 (cm^3/cm^3)] in the material relative to its dry condition, where *dry condition* is defined as the condition resulting when the material is heated in an oven at 221°F ± 1°F (105°C ± 0.5°C) until no further weight loss occurs.

F.3.2 The average moisture content of the cement paste can be estimated from the known value of *RH* at mid-depth (assuming the material has never been subject to rewetting) by calculating first the moisture content in the cement paste as follows:

$$m_c = A \cdot m_c$$

F.3.3 The average moisture content of the test specimen then is calculated as follows:

$$m_a = v \cdot m_a$$

F.3.4 The average moisture content of a standard conditioned specimen is calculated as follows:

$$m_s = v \cdot m_{es}$$

where m_{es} is the value of m_e in Table F.2(c) pertaining to the standard *RH* level.

Table F.2(a) Factor Characterizing Drying Conditions

Conditioning Environment	Mid-Depth *RH* of Test Specimen (%)	Factor *A* for Portland Cement	
		Normal-Weight Concrete	Lightweight Concrete
60°F–80°F (15.6°C–26.7°C), atmospheric conditions	Any	1.0	1.0
120°F–160°F (48.9°C–71.1°C), 20–35% *RH*	70–75	0.7	0.7
190°F–200°F (87.8°C–93.3°C), 0–5% *RH*	70–75	0.45	0
120°F–200°F (48.9°C–93.3°C), 5–35% *RH*	Less than 70	0	0

Table F.2(b) Factor Characterizing Permeability of Test Specimen

Material	*b*
Normal-weight and gun-applied concrete [dry unit weight greater than 135 lb/ft^3 (2162 kg/m^3)]	5.5
Lightweight concrete [dry unit weight 85 lb/ft^3–115 lb/ft^3 (1361 kg/m^3–1841 kg/m^3)]	8.0
Lightweight insulating concrete [dry unit weight less than 50 lb/ft^3 (801 kg/m^3)]	10.0

Table F.2(c) Equilibrium Moisture Content (Desorption) of Cement Paste at Given Relative Humidity

RH at Mid-Depth (%)	m_e
90	0.30
85	0.274
80	0.255
75	0.24
70	0.225
65	0.21
60	0.195
55	0.185
50	0.175
45	0.16
40	0.15

F.4 Correction Procedure. The correction procedure begins with the selection of an empirical factor to reflect the permeability of the material as suggested in Table F.2(b). The known values of m_a and m_s are used to calculate the products bm_a and bm_s. On the nomograph *(see Figure F.4),* lines are drawn from

Copyright National Fire Protection Association
Provided by IHS under license with NFPA
No reproduction or networking permitted without license from IHS
Not for Resale

point *R* to values of bm_a and bm_s on the right scale. From the point representing the actual fire endurance time (*FE*) on the left scale, a line is drawn parallel to *R*-bm_a to intersect the curve. From that point on the curve, a line is drawn parallel to *R*-bm_s, and the corrected fire endurance is determined from the *FE* scale.

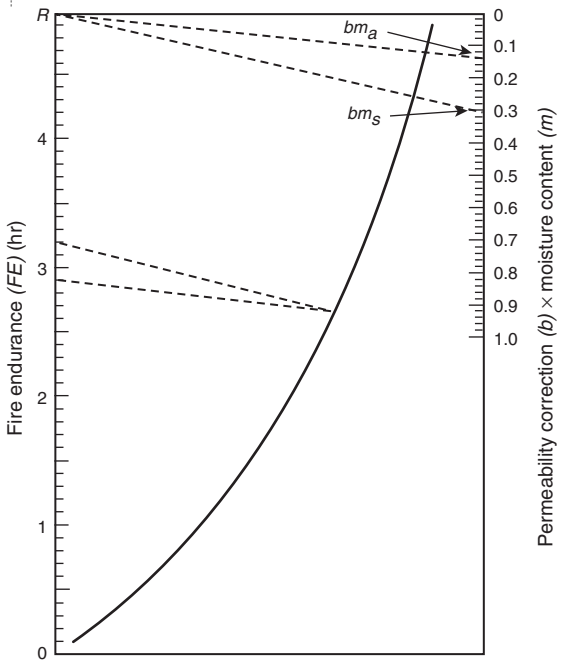

FIGURE F.4 Nomograph for Correcting Fire Endurance for Nonstandard Moisture Content.

F.5 Example. A wall made from normal weight concrete having 23.2 volume percent of paste is conditioned at 200°F (93°C) and 5 percent *RH* until the *RH* at its mid-depth is reduced to 70 percent. It has a 2.90-hour fire endurance. The adjusted fire endurance is calculated as shown in F.5.1 through F.5.6.

F.5.1 Calculate m_a as follows:

For 70 percent *RH*,

$$m_e = 0.225 \quad \textit{[see Table F.2(c).]}$$

For 200°F (93°C) and 5 percent *RH* conditioning, for normal weight concrete,

$$A = 0.45 \quad \textit{[see Table F.2(a)]}$$
$$m_e = 0.45 \times 0.225 = 0.101 \quad \textit{(see F.3.2)}$$

For $v = 0.232$

$$m_a = 0.232 \times 0.101 = 0.0234 \quad \textit{(see F.3.3)}$$

that is, the concrete contains 2.34 volume percent moisture at time of test.

F.5.2 Calculate m_s as follows:

Example: If the standard moisture level is assumed to correspond to a mid-depth *RH* of 75 percent, $m_e = 0.24$, then

$$m_s = 0.232 \times 0.24 = 0.0557 \quad \textit{(see F.3.4)}$$

that is, the standard moisture level is 5.57 volume percent.

F.5.3 Calculate *bm* as follows:

$$b = 5.5 \quad \textit{[see Table F.2(b)]}$$
$$bm_a = 5.5 \times 0.0234 = 0.129$$
$$bm_s = 5.5 \times 0.0557 = 0.306$$

F.5.4 Draw lines on the nomogram from point *R* to bm_a and bm_s *(see Figure F.4).*

F.5.5 Draw a line from the *FE* ordinate, 2.90, parallel to line *R*-bm_a to intersect the curve.

F.5.6 Draw a line parallel to *R*-bm_s from a point on the curve to intersect the *FE* ordinate scale. The value, 3.19, is the adjusted fire endurance, that is, the fire endurance if the specimen had been tested at the standard moisture level, which is assumed in this example to correspond to 75 percent *RH* at mid-depth.

Annex G Commentary

This annex is not a part of the requirements of this NFPA document but is included for informational purposes only.

G.1 Introduction.

G.1.1 This commentary has been prepared to provide the user of this standard with background information on the development of the standard and its application in the fire protection of buildings. It also provides guidance in the planning and performance of fire tests and in the reporting of results. No attempt has been made to incorporate into this commentary all the available information on fire testing. The serious student of fire testing is strongly urged to consult the referenced documents for a better appreciation of the history of fire-resistant design and the intricate problems associated with testing and with interpretation of test results.[1, 2]

G.1.2 Floors and walls designed as fire separations have been recognized for many years as efficient tools for restricting fires to the area of origin or limiting their spread.[3–11] Prior to 1900, relative fire safety was achieved by mandating use of specific materials. By the year 1900, the appearance of a multitude of new materials and innovative designs and constructions accelerated the demand for performance standards. The British Fire Prevention Committee, established in 1894, was the first to produce tables that provided fire-resistive floors, ceilings, doors, and partitions.[5] Test furnaces in the United States were constructed shortly after 1900 at the Underwriters Laboratories Inc., Columbia University, and the National Bureau of Standards (NBS).[1, 12] These early furnaces eventually led to the development of ASTM E 119, *Standard Test Methods for Fire Tests of Building Construction and Materials*, and its counterpart, NFPA 251.

G.2 Historical Aspects. ASTM E 119, *Standard Test Methods for Fire Tests of Building Construction and Materials*, was first published as ASTM C 19 in 1918. A number of refinements have been made to the standard since that time. However, several provisions, including the temperature–time curve, the major apparatus, and the acceptance criteria have remained essentially unchanged. The roots of fire testing as defined today can be traced back to about 1800. A comprehensive review of early fire testing has been published.[1]

Copyright National Fire Protection Association
Provided by IHS under license with NFPA
No reproduction or networking permitted without license from IHS
Not for Resale

G.3 Fire Load Concept.

G.3.1 Specifications for fire resistance in regulatory documents continue to be based largely on the fire load concept developed by NBS in the 1920s and reported by S. H. Ingberg in 1928 in NFPA *Quarterly*. The concept incorporates the premise that the duration of a fire is proportional to the fire loading (i.e., the mass of combustible materials per unit floor area). The relationship between the mass of combustible materials and fire duration was established on the basis of burnout tests in structures incorporating materials having calorific or potential heat values equivalent to wood and paper [i.e., 7000 Btu/lb to 8000 Btu/lb (16.3 MJ/kg to 18.6 MJ/kg)]. The fire loads of noncellulosic materials, such as oils, waxes, and flammable liquids, were interpreted on the basis of their equivalent calorific content.[5, 13–15] In the simplest terms, the calorific content premise means that 10 lb (50 kg) of combustible materials per ft^2 (m^2) of floor area produce a fire of 1-hour duration.

G.3.2 Increasing sophistication in the understanding of materials and the fire process is the result of numerous research activities.[9, 11, 13–27] It is now generally conceded that fire severity as well as the temperature–time relationship of a fire depends on several factors, including the following:

(1) Amount and type of the fire load
(2) Distribution of the fire load
(3) Specific surface characteristics of the fire load[5, 27]
(4) Ventilation, as determined by the size and shape of openings [17–19, 21, 27–29]
(5) Geometry (the size and shape) of the fire compartment
(6) Thermal characteristics of the enclosure boundaries
(7) Relative humidity of the atmosphere

G.3.3 For the purposes of this annex, fire severity is defined in terms of temperature (one measure of an effect of fire intensity) and fire duration. It is expressed in terms of minutes or hours of fire exposure and, in NFPA 251, is assumed to be equivalent to that defined by the standard temperature–time (*T-t*) curve (i.e., the area under the *T-t* curve).[27]

G.4 Scope and Significance.

G.4.1 This standard is intended to evaluate, in terms of endurance time, the ability of an assembly to contain a fire or to retain its structural integrity, or both, during the test conditions imposed by the standard. It also contains standard conditions for measuring heat transfer through membrane elements protecting combustible framing or surfaces.

G.4.2 The end-point criteria by which the test result is assessed are related to the following:

(1) Transmission of heat through the test assembly
(2) Ability of the test assembly to withstand the transmission of flames or gases hot enough to ignite combustible material
(3) Ability of the assembly to carry the load and withstand restraining forces during the fire test period
(4) Temperature of the steel under some conditions

G.4.3 Fire resistance ratings should reflect performance during the period of exposure, and performance should not be construed as having determined suitability for use after the exposure.

G.4.4 This standard, although specific regarding the assembly to be tested, enables the testing laboratory to determine whether the specimen is a true representation of the assembly intended for evaluation. This is necessary because of the wide variation in assemblies. For instance, wall test specimens generally do not contain electric switches and outlets, which in some designs can affect test results. Floor test specimens might or might not contain electrical raceways and outlets or pull boxes for power and communications wiring. Cover plates over trench headers also are present in some designs. The testing laboratory is in the best position to judge the effects of such components.

G.5 Test Furnaces. This standard does not provide specific construction details for the furnace. Users are urged to consult reference documents for a more comprehensive review of furnace design and performance.[25]

G.6 Temperature–Time Curve.

G.6.1 A specific temperature–time relationship for the test fire is defined in the standard and in Table B.1. The actual recorded temperatures in the furnace are required to be within specified percentages of those of the standard curve. Accuracy in measuring temperature generally is easier to achieve after 1 hour due to stabilizing of the furnace and the slope of the *T-t* curve. The number and type of temperature-measuring devices are outlined in the standard. Specific standard practices for location and use of these temperature-measuring devices also are outlined in the standard. However, no uniformity of the temperatures within the fire chamber is specified.

G.6.2 The standard *T-t* curve used in this standard represents a severe building fire.[5] The curve was adopted in 1918 as a result of several conferences by 11 technical organizations, including testing laboratories, insurance underwriters, fire protection associations, and technical societies.[1, 16, 30] The *T-t* relationship of these test methods represents only one fire situation. Data are available to evaluate the performance of assemblies under fire exposure conditions that are more representative of particular fire situations (i.e., using different *T-t* relationships to simulate specific fire conditions).[9, 11, 16, 19, 22, 23, 27, 29, 31, 32]

G.6.3 Furnace pressure is not specified and is generally slightly negative. The pressure can have an effect on the test results, and the test conditions always should be controlled carefully.

G.7 Test Specimen.

G.7.1 The test specimen is required to represent as closely as possible the actual construction in the field subject to the limits imposed by the test facilities.

G.7.2 All specimens are required to be conditioned so as to attain a moisture content comparable to that in the field prior to testing. For uniformity, the standard moisture content is defined as that in equilibrium with an atmosphere of 50 percent relative humidity at 73°F (23°C). Massive concrete units that need unusually long drying periods can be fire-tested after a 12-month conditioning period. Annex F describes how the test result should be corrected to account for any variation from the standard moisture condition.[33]

G.7.3 With few exceptions, only the interior face of exterior wall assemblies and the ceiling portion or underside of floor or roof assemblies are exposed to the standard fire.[24, 25] The rationale for this practice is based on the assumption that the outside face of exterior walls is not usually subjected to the same fire exposure as the interior face and that the fire exposure of the upper side of a floor or roof assembly is seldom as intense as that of the underside.

Copyright National Fire Protection Association
Provided by IHS under license with NFPA
No reproduction or networking permitted without license from IHS
Not for Resale

G.7.4 Although this standard does not contain specific criteria for judging the impact of through-joints or poke-through devices, such as electrical or telephone outlets, it should be recognized that these components should be evaluated with respect to structural performance and temperature-rise criteria if they constitute a significant part of the tested assembly.

G.7.5 For obvious reasons, symmetrical walls and partitions are tested only on one side. Asymmetrical walls and partitions might be required to be tested with either or both sides individually exposed to the fire. If both sides are exposed, the report should indicate the fire endurance classification for each case.

G.8 Loading.

G.8.1 Floors and roofs generally are loaded during tests to provide a maximum load condition determined by the applicable nationally recognized design criteria. This practice is intended to accommodate those designs that are loaded to maximum design conditions in actual intended use. Through the application of engineering principles, those fire endurance ratings developed can be applied to assemblies having spans greater than those tested.

G.8.2 Where a floor or roof assembly is designed for a specific use, such as in prefabricated housing units, the assembly can be tested with a restricted load condition. The loading condition used for such tests is to be defined in the test report. This standard does not require specific loading devices. Some laboratories use large containers of water; others use a system of hydraulic rams for floor and roof assemblies. Where a uniformly distributed load is simulated by point-loading (several small-area loads), it is recommended that the load at any such area not exceed 25 percent of the total load and that the individual load have a width at least equal to the depth of the floor. Wall furnaces generally are equipped with hydraulic rams.

G.8.3 This standard requires that load-bearing walls and partitions sustain the applied test load during the fire endurance and hose stream tests. A former provision that required load-bearing walls and partitions to sustain twice the specified superimposed test load after cooling but within 72 hours of the test period has been deleted from the method as being unrealistic. Nonbearing walls and partitions are not loaded during the test but are restrained on all sides. This restraint could impose more stress than a load on top. The ASTM Committee E-5 has reviewed the loading procedures for framed walls and partitions several times. It was the committee's unanimous decision that such a wall be tested either with calculated maximum design load or with a load expected to occur in practice. The method used to compute the design loads should be reported.

G.8.4 Some important stresses, such as those caused by creep and shrinkage in the wall itself and its supporting frame, are present, and the designer should recognize these stresses in the analysis. The ASTM Committee E-5 has investigated the possibility of openings occurring in joints at the corners of non-load-bearing enclosures due to differential movement. While the possibility exists that this will occur, the committee has not found it feasible to amend the test based on available data.

G.8.5 Double walls pose a unique problem for load application. Which wall should be loaded? Should both walls be loaded simultaneously? The ASTM Committee E-5 has devoted considerable time to debating this problem and recommends that the decision be made by the user after an analysis of the loading conditions anticipated in service both before and after a fire. Such loading conditions are to be reported.

G.9 Integrity. All walls and partitions that qualify for a fire endurance classification of 1 hour or more are required to be subjected to the cooling impact and erosion effects of a stream of water from a 2½ in. (63.5 mm) hose discharging through a standard play pipe equipped with a 1⅛ in. (28.6 mm) tip under specified pressures. In this hose stream test, the ability of the construction to resist disintegration under adverse conditions is examined. The requirement for a hose stream test was removed from the test procedure for columns and floor or roof assemblies because of impracticality and the possibility of excessive damage to the furnace.

G.10 Conditions of Tests.

G.10.1 Columns generally are tested with all four sides exposed to the test fire. However, it is possible to test a column with three sides exposed (with the fourth side against a wall). This standard requires that specimens be tested under conditions contemplated in the design. The former general practice of testing columns with pin connection at the top and bottom to simulate the most critical condition is no longer a criterion.

G.10.2 Columns are required to sustain successfully the design load during the test period. This standard also permits columns to be loaded up to 1¾ times the design load prior to the fire test, if desired by the submitter. Such loading, however, should not be construed as having had a deleterious effect on the fire endurance test performance. Instead of loading, steel columns, whose protective covering does not carry a load, can be assigned a fire resistance classification on the basis of the temperature of the steel only. With such columns, the protective cover should be restrained against longitudinal expansion. Wood columns are tested for load-carrying ability only.

G.10.3 Test results have established that variations of restraint conditions can influence the time of fire resistance for a structure or a structural element considerably. Restraints generally are beneficial to fire resistance; however, there are conditions under which restraint can have a detrimental effect on the performance of a specimen during a fire resistance test.[34, 35] The users of test results are advised to study the reference documents as well as Annex E and Table E.1.5.

G.10.4 An unrestrained fire resistance rating for a steel beam or a reinforced concrete beam used as part of an assembly tested in restrained condition can be assessed from the temperature records obtained for the steel or the reinforcing steel, respectively *(see Chapter 13)*. It is also possible to evaluate the protective cover of steel beams by measuring the temperature of the steel that is protected *(see Chapter 14)*. The fire resistance rating determined under the provisions of Chapter 13 is applicable only to beams used with a floor or roof construction that has a comparable or greater capacity for heat dissipation from the beam than the floor or roof with which the beam is tested.

G.11 Other Observations.

G.11.1 No limitation is imposed on the deformation of the specimen during or after the test period. It is assumed that the deflection or deformation of an assembly is limited only by its ability to stay in place (under load, where specified) during the test period.

G.11.2 A complete record of deformation during the endurance test is helpful in the application of test results and should be reported.

Copyright National Fire Protection Association
Provided by IHS under license with NFPA
No reproduction or networking permitted without license from IHS
Not for Resale

G.11.3 Other observations, such as the evolution of unusual quantities of visible smoke, vapors, or gases that could affect the proper decision regarding use of the test results, should be reported.

G.12 Protective Membranes. This standard provides criteria for evaluating the protection that membrane elements can offer to combustible framing and paneling (e.g., joists, wall studs, and paneling or boards on the unexposed side of an assembly and other combustible materials). The results of these tests are reported as protective membrane ratings.

G.13 References.

(1) Babrauskas, V., and R. B. Williamson, "The Historical Basis of Fire Resistance Testing," Part I and Part II, *Fire Technology*, Vol. 14, No. 3, 1978, pp. 184–194, and Vol. 14, No. 4, 1978, pp. 304–316.

(2) Shoub, H., "Early History of Fire Endurance Testing in the United States," *Symposium on Fire Test Methods*, ASTM STP 301, American Society for Testing and Materials, 1961, pp. 1–9.

(3) Dilam, C. H., et al., *Modern Building Inspection*, Los Angeles: R. C. Colling and Associates, 1942.

(4) *Facts About Fires*, Quincy, MA: National Fire Protection Association, 1971.

(5) Bird, E. L., and S. J. Docking, *Fire in Buildings*, New York: Van-Nostrand, 1949.

(6) Ferguson, R. S., "Principles of Fire Protection," Technical Paper No. 272, Division of Building Research, National Research Council of Canada, Ottawa, March 1970.

(7) Konicek, L., and T. T. Lie, "Temperature Tables for Ventilation Controlled Fires," Building Research Note No. 94, National Research Council of Canada, Ottawa, September 1974.

(8) Gordon, C., "Considerations of Life Safety and Building Use," DBR Paper No. 699, National Research Council of Canada, Ottawa, January 1977.

(9) Shorter, G. W., "The Fire Protection Engineer and Modern Building Design," *Fire Technology*, Vol. 4, No. 3, August 1968, pp. 206–213.

(10) Harmathy, T. Z., "Performance of Building Elements in Spreading Fire," DBR Paper No. 752, National Research Council of Canada, NRCC 16477, *Fire Research,* Vol. 1, 1977/1978, pp. 119–132.

(11) Harmathy, T. Z., "Design Approach to Fire Safety in Buildings," *Progressive Architecture*, NRCC 14076, National Research Council of Canada, Ottawa, April 1974, pp. 82–87.

(12) "Rule 508 — Industrial Code," New York State Labor Law, *New York City Building Code*, 1934 edition, p. 513.

(13) Robertson, A. E., and D. Gross, "Fire Load, Fire Severity, and Fire Endurance," *Fire Test Performances*, ASTM STP 464, American Society for Testing and Materials, 1970, pp. 3–29.

(14) BMS 92, *Building Materials and Standards*, Washington, DC: National Bureau of Standards, October 1942.

(15) Ingberg, S. H., et al., "Combustible Contents in Buildings," BMS 149, Washington, DC: National Bureau of Standards, July 1957.

(16) Seigel, L. G., "The Severity of Fires in Steel Framed Buildings," London: Her Majesty's Stationery Office, 1968. Proceedings of symposium held at the Fire Research Station, Borehamwood, Herts. (England), January 24, 1967, pp. 59–63.

(17) Gross, D., "Field Burnout Tests of Apartment Dwelling Units," Building Science Series 10, Washington, DC: U.S. Dept. of Commerce, National Bureau of Standards, September 29, 1967.

(18) Law, M., "Radiation from Fires in a Compartment," Fire Research Technical Paper No. 20, London: Her Majesty's Stationery Office, 1968.

(19) Heselden, A. J. M., "Parameters Determining the Severity of Fire," Symposium No. 2, London: Her Majesty's Stationery Office, 1968. Proceedings of symposium held at the Fire Research Station, Borehamwood, Herts. (England), January 24, 1967, pp. 19–27.

(20) Sfintesco, D., "Furnace Tests and Fire Resistance," Building Science Series 10, Washington, DC: U.S. Dept. of Commerce, National Bureau of Standards, September 29, 1967.

(21) Gross, D., and A. F. Robertson, "Experimental Fires in Enclosures," Tenth Symposium (International) on Combustion, Pittsburgh: The Combustion Institute, 1965, pp. 931–942.

(22) Odeen, Kai, "Theoretical Study of Fire Characteristics in Enclosed Spaces," Division of Building Construction, Stockholm: Royal Institute of Technology, 1965.

(23) Ryan, J. E., "Perspective on Methods of Assessing Fire Hazards in Buildings," *Ignition, Heat Release, and Noncombustibility of Materials*, ASTM STP 502, American Society for Testing and Materials, 1972, pp. 11–23.

(24) Harmathy, T. Z., "Performance of Building Elements in Spreading Fire," DBR Paper No. 752, National Research Council of Canada, NRCC 16477, *Fire Research,* Vol. 1, 1977/1978, pp. 119–132.

(25) Harmathy, T. Z., "Design of Fire Test Furnaces," *Fire Technology*, Vol. 5, No. 2, May 1969, pp. 146–160.

(26) Harmathy, T. Z., "Fire Resistance versus Flame Spread Resistance," *Fire Technology*, Vol. 12, No. 4, November 1976, pp. 290–302, 330.

(27) Harmathy, T. Z., "A New Look at Compartment Fires," Part I and Part II, *Fire Technology*, Vol. 8, No. 3, August 1972, pp. 196–217, and Vol. 8, No. 4, November 1972, pp. 326–351.

(28) Satsberg, F., Illinois Institute of Technology Research Institute Limited release on research data conducted for U.S. Dept. of Civil Defense.

(29) Harmathy, T. Z., "Designers Option Fire Resistance or Ventilation," Technical Paper No. 436, Division of Building Research, National Research Council of Canada, Ottawa, NRCC 14746, 1974.

(30) *Fire Protection Handbook*, 16th edition, Quincy, MA: National Fire Protection Association, 1986.

(31) Magusson, S.-E., and O. Petersson, ISO/TE-WG5 Report, March 9–10, 1967, Copenhagen (Sweden-B) — Exhibit 14. Preliminary report on some theoretical studies for structural elements of the effect on their fire resistance of variations of *T-t* curve for cooling down period.

(32) Ryan, J. E., and A. F. Robertson, "Proposed Criteria for Defining Load Failure of Beams, Floors, and Roof Construction During Fire Tests," *Journal of Research of the National Bureau of Standards*, Vol. 63C, No. 2, 1959.

(33) Harmathy, T. Z., "Experimental Study on Moisture and Fire-Endurance," *Fire Technology*, Vol. 2, No. 1, February 1966.

(34) Carlson, C. C., S. L. Selvaggio, and A. H. Gustaferro, *A Review of Studies of the Effects of Restraint on the Fire-Resistance of Prestressed Concrete*, Feuerwider-stansfahigkeit

--`,,```,,-`-`,,`,,`,`,,`---

Copyright National Fire Protection Association
Provided by IHS under license with NFPA
No reproduction or networking permitted without license from IHS

Not for Resale

von Spannbeton, Ergebnisse einer Tagung der F.I.P. in Braunschweig, June 1965, Wiesbaden-Berlin, 1966, p. 32.

(35) Issen, L. A., A. H. Gustaferro, and C. C. Carlson, "Fire Tests of Concrete Members: An Improved Method for Estimating Thermal Restraint Forces," *Fire Test Performance*, ASTM STP 464, American Society for Testing and Materials, 1970, pp. 153–185.

G.14 Additional References.

Castle, G. K., "The Nature of Various Fire Environments and the Application of Modern Material Approaches for Fire Protection of Exterior Structural Steel," presented at American Institute of Chemical Engineers Loss Prevention Symposium, Philadelphia, PA, November 1973.

Crowley, D., et al., "Test Facilities for Measuring the Thermal Response of Materials to the Fire Environment," *Journal of Testing and Evaluation*, Vol. 1, No. 5.

Ingberg, S. H., "Tests of the Severity of Building Fires," *NFPA Quarterly*, Vol. 22, No. 1, July 1928, pp 43–61.

Ingberg, S. H., "The Hose-Stream Test as a Part of Fire-Testing Procedure," Symposium on Fire Test Methods 1962, ASTM STP 344, American Society for Testing and Materials, 1963, pp. 57–68.

Stone, Richard, "Danger—Flammable," *Wall Street Journal*, December 8, 1970.

Warren, J. H., and A. A. Corona, "This Method Tests Fire Protective Coatings," *Hydrocarbon Processing*, January 1975.

Annex H Informational References

H.1 Referenced Publications. The following documents or portions thereof are referenced within this standard for informational purposes only and are thus not part of the requirements of this document unless also listed in Chapter 2.

H.1.1 NFPA Publication. National Fire Protection Association, 1 Batterymarch Park, Quincy, MA 02169-7471.

Ingberg, S. S., "Tests of the Severity of Building Fires," *NFPA Quarterly*, Vol. 22, No. 1, July 1928.

H.1.2 Other Publications.

H.1.2.1 ASTM Publications. American Society for Testing and Materials, 100 Barr Harbor Drive, West Conshohocken, PA 19428-2959.

ASTM C 569, *Test for Indentation Hardness of Preformed Thermal Insulations*, 1989.

ASTM E 119, *Standard Test Methods for Fire Tests of Building Construction and Materials*, 1997.

H.1.2.2 Other Publications.

Babrauskas, Vytenis, and Robert Brady Williamson, "The Historical Basis of Fire Resistance Testing," Part I and Part II, *Fire Technology*, Vol. 14, No. 3 and No. 4, 1978, pp. 184–194, 304–316.

Bird, E. L. and S. J. Docking, *Fire in Buildings*, D. Van-Nostrand Co., Inc., New York, 1949.

BMS 92, *Building Materials and Standards*, National Bureau of Standards, Washington, DC, October 1942.

Carlson, C. C., Selvaggio S. L., and Gustaferro A. H., *A Review of Studies of the Effects of Restraint on the Fire-Resistance of Prestressed Concrete*, Feuerwider-stansfahigkeit von Spannbeton, Ergebnisse einer Tagung der F.I.P. in Braunschweig, June 1965, Wiesbaden-Berlin, 1966, p. 32.

Dilam, C. H., et al., *Modern Building Inspection*, R. C. Colling and Associates, Los Angeles, CA, 1942.

Facts About Fires, National Fire Protection Assn., Quincy, MA, 1971.

Ferguson, R. S., "Principles of Fire Protection," Technical Paper No. 272, Division of Building Research, National Research Council of Canada, Ottawa, March 1970.

Fire Protection Handbook, 16th edition, National Fire Protection Association, Quincy, MA, 1986.

Gordon, C., "Considerations of Life Safety and Building Use," DBR Paper No. 699, National Research Council of Canada, Ottawa, January 1977.

Gross, D., "Field Burnout Tests of Apartment Dwelling Units," Building Science Series 10, U. S. Dept. of Commerce, National Bureau of Standards, September 29, 1967.

Gross, Daniel and A. F. Robertson, "Experimental Fires in Enclosures," Tenth Symposium (International) on Combustion, The Combustion Institute, 1965, pp. 931–942.

Harmathy, T. Z., "Design Approach to Fire Safety in Buildings," *Progressive Architecture*, NRCC 14076, National Research Council of Canada, Ottawa, April 1974, pp. 82–87.

Harmathy, T. Z., "Design of Fire Test Furnaces," *Fire Technology*, Vol. 5, No. 2, May 1969, pp. 146–160.

Harmathy, T. Z., "Designers Option Fire Resistance or Ventilation," Technical Paper No. 436, Division of Building Research, National Research Council of Canada, Ottawa, NRCC 14746, 1974.

Harmathy, T. Z., "Experimental Study on Moisture and Fire-Endurance," *Fire Technology*, Vol. 2, No. 1, February 1966.

Harmathy, T. Z., "Fire Resistance versus Flame Spread Resistance," *Fire Technology*, Vol. 12, No. 4, November 1976, pp. 290–302, 330.

Harmathy, T. Z., "A New Look at Compartment Fires," Part I and Part II, *Fire Technology*, Vol. 8, No. 3 and No. 4, August and November 1972, pp. 196–217; 326–351.

Harmathy, T. Z., "Performance of Building Elements in Spreading Fire", DBR Paper No. 752, National Research Council of Canada, NRCC 16477, *Fire Research,* Vol. 1, 1977/1978, pp. 119–132.

Heselden, A. J. M., "Parameters Determining the Severity of Fire," Symposium No. 2, Her Majesty's Stationery Office, 1968, London. Proceedings of the Symposium held at the Fire Research Station, Borehamwood, Herts. (England), January 24, 1967, pp. 19–27.

Ingberg, S. H., et al., "Combustible Contents in Buildings," BMS 149, National Bureau of Standards, Washington, DC, July 1957.

Issen, L. A., Gustaferro A. H., and Carlson C. C., "Fire Tests of Concrete Members; An Improved Method for Estimating Thermal Restraint Forces," *Fire Test Performance*, ASTM STP 464, American Society for Testing and Materials, 1970, pp. 153–185.

Konicek, L., and T. T. Lie, "Temperature Tables for Ventilation Controlled Fires," Building Research Note No. 94, National Research Council of Canada, September 1974.

Law, Margaret, "Radiation from Fires in a Compartment," Fire Research Technical Paper No. 20, Her Majesty's Stationery Office, London, 1968.

Copyright National Fire Protection Association
Provided by IHS under license with NFPA
No reproduction or networking permitted without license from IHS
Not for Resale

Magusson, Sven-Erik, and Ove Petersson, ISO/TE-WG5 Report, March 9–10, 1967, Copenhagen, Denmark (Sweden-B)—Exhibit 14. Preliminary report on some theoretical studies for structural elements of the effect on their fire resistance of variations of *T-t* curve for cooling down period.

Menzel, Carl A., "A Method for Determining the Moisture Condition of Hardened Concrete in Terms of Relative Humidity," Proceedings, American Society for Testing and Materials, Vol. 55, 1955, p. 1085.

Odeen, Kai, "Theoretical Study of Fire Characteristics in Enclosed Spaces," Division of Building Construction, Royal Institute of Technology, Stockholm, Sweden, 1965.

Robertson, A. E., and Daniel Gross, "Fire Load, Fire Severity, and Fire Endurance," *Fire Test Performances*, ASTM STP 464, American Society for Testing and Materials, 1970, pp. 3–29.

"Rule 508 — Industrial Code," New York State Labor Law, *New York City Building Code*, p. 513, 1934 Edition.

Ryan, J. E., "Perspective on Methods of Assessing Fire Hazards in Buildings," *Ignition, Heat Release, and Noncombustibility of Materials*, ASTM STP 502, American Society for Testing and Materials, 1972, pp. 11–23.

Ryan, J. E. and A. F. Robertson, "Proposed Criteria for Defining Load Failure of Beams, Floors, and Roof Construction During Fire Tests," *Journal of Research of the National Bureau of Standards*, Washington, DC, Vol. 63C, No. 2, 1959.

Satsberg, F., Illinois Institute of Technology Research Institute Limited release on research data conducted for U.S. Dept. of Civil Defense.

Seigel, L. G., "The Severity of Fires in Steel Framed Buildings," Her Majesty's Stationery Office, 1968, London. Proceedings of the Symposium held at the Fire Research Station, Borehamwood, Herts. (England), January 24, 1967, pp. 59–63.

Sfintesco, D., "Furnace Tests and Fire Resistance," Building Science Series 10, U.S. Dept. of Commerce, National Bureau of Standards, September 29, 1967.

Shorter, G. W., "The Fire Protection Engineer and Modern Building Design," *Fire Technology*, Vol. 4, No. 3, August 1968, pp. 206–213.

Shoub, H., "Early History of Fire Endurance Testing in the United States," *Symposium on Fire Test Methods*, ASTM STP 301, American Society for Testing and Materials, 1961, pp. 1–9.

U.S. Department of Agriculture, *Wood Handbook of the Forest Products Laboratory*, 1955, pp. 320–321, 327.

H.2 Informational References. The following documents or portions thereof are listed here as informational resources only. They are not a part of the requirements of this document.

H.2.1 NFPA Publication. National Fire Protection Association, 1 Batterymarch Park, Quincy, MA 02169-7471.

NFPA 255, *Standard Method of Test of Surface Burning Characteristics of Building Materials*, 2006 edition.

H.2.2 UL Publication. Underwriters Laboratories Inc., 333 Pfingsten Road, Northbrook, IL 60062-2096.

ANSI/UL 385, *Standard for Play Pipes for Water Supply Testing in Fire Protection Service*, 2005.

H.2.3 Other Publications.

Castle, G. K., "The Nature of Various Fire Environments and the Application of Modern Material Approaches for Fire Protection of Exterior Structural Steel," presented at American Institute of Chemical Engineers Loss Prevention Symposium, November 1973, Philadelphia, PA.

Crowley, D., et al., "Test Facilities for Measuring the Thermal Response of Materials to the Fire Environment," *Journal of Testing and Evaluation*, Vol. 1, No. 5.

Ingberg, S. H., "The Hose-Stream Test as a Part of Fire-Testing Procedure," Symposium on Fire Test Methods 1962, ASTM STP 344, American Society for Testing and Materials, 1963, pp. 57–68.

Stone, Richard, "Danger — Flammable," *Wall Street Journal*, New York, NY, December 8, 1970.

Warren, J. H., and A. A. Corona, "This Method Tests Fire Protective Coatings," *Hydrocarbon Processing*, January 1975.

H.3 References for Extracts in Informational Sections. (Reserved)

Copyright National Fire Protection Association
Provided by IHS under license with NFPA
No reproduction or networking permitted without license from IHS
Not for Resale

Index

© 2005 National Fire Protection Association. All Rights Reserved.

The copyright in this index is separate and distinct from the copyright in the document that it indexes. The licensing provisions set forth for the document are not applicable to this index. This index may not be reproduced in whole or in part by any means without the express written permission of NFPA.

-A-

Acceptance, conditions of
- Beams
  - Loaded, alternative procedure for 13.3
  - Loaded restrained 12.4
  - Solid structural steel, alternative test of protection for 14.4
- Columns 9.3
  - Structural steel, alternative test of protection for 10.5
- Floor and roof assemblies
  - Protective membranes 15.4
  - Restrained assembly 11.5
  - Unrestrained assembly 11.6
- Walls and partitions
  - Bearing 7.3
  - Nonbearing 8.2
  - Protective membranes 15.4

Application of standard 1.3

-B-

Beams .....*see also* Restrained beams
- Loaded, alternative procedure for ..... Chap. 13
- Loaded restrained, tests of ..... Chap. 12
- Report of results 16.4
- Solid structural steel, alternative test of protection for ..... Chap. 14, G.10.4
- Unrestrained ..... Chap. 13, G.10.4

Bearing walls and partitions, tests of ..... Chap. 7, 16.4, G.8.3

-C-

Columns, tests of ..... Chap. 9, G.10.1
- Furnace temperatures 4.2.1, A.4.21
- Loading 9.2, G.10.2
- Report of results 16.4
- Structural steel, alternative test of protection for ..... Chap. 10, G.10.1, G.10.2

Commentary on standard ..... Annex G
Concrete slabs, method of correcting fire endurance for ..... Annex F
Conditions of acceptance .....*see* Acceptance, conditions of
Conditions of tests G.10
Conduct of tests ..... Chap. 6
- Fire resistance test 6.1
- Hose stream test 6.2

Control of fire tests ..... Chap. 4

-D-

Definitions ..... Chap. 3

-F-

Fire resistance (definition) 3.3.1, A.3.3.1
Fire resistance rating (definition) 3.3.2, A.3.3.2
Fire tests, conduct of ..... Chap. 5
Fire tests, control of ..... Chap. 4
Floor and roof assemblies, tests of .... Chap. 11, G.1.2, G.7.3; *see also* Restrained floor and roof assemblies
- Furnace temperatures 4.2.1, A.4.2.1
- Loading 11.3, G.8.1, G.8.2
- Performance of protective membranes ..... Chap. 15
- Report of results 16.2, 16.4
- Unexposed surfaces, temperatures of 4.3, A.4.3.1
- Unrestrained assembly, conditions of acceptance of 11.6

Furnaces
- Burners, recording fuel flow to A.4.2
- Pressure 4.4, A.4.4.5.2, G.6.3
- Temperatures 4.2, A.4.2
- Test G.5

-G-

Girders, solid structural steel, alternative test of protection for ..... Chap. 14

-H-

Hose stream test 6.2, 7.3, 8.2, D.6, G.8.3, G.9

-I-

Integrity, test of G.9

-L-

Loaded beams
- Alternative procedure for ..... Chap. 13
- Report of results 16.4
- Restrained, tests of ..... Chap. 12

Loading ..... G.3, G.8; *see also* Loaded beams
- Bearing walls and partitions, tests of ..... 7.2, 7.3(2), A.7.2, G.8.3 to G.8.5
- Columns, tests of 9.2, G.10.2
- Floor and roof assemblies, tests of 11.3, G.8.1, G.8.2
- Loaded restrained beams, tests of 12.3
- Report of results 16.4

-M-

Measurement, units of 1.4
Membranes, protective, in wall, partition, floor, or roof assemblies ..... Chap. 15, 16.3, G.12

-N-

Nonbearing walls and partitions, tests of ..... Chap. 8

-O-

Operating criteria, fire tests ..... Annex B

-P-

Partitions .....*see* Walls and partitions
Pressure, furnace 4.4, A.4.4.5.2, G.6.3
Protective membranes .....*see* Membranes, protective
Purpose of standard 1.2, A.1.2.3

-R-

References ..... Chap. 2, Annex H
Report of results ..... Chap. 16, Annex D, G.11.2, G.11.3
- Fire resistance rating as determined by test 16.1, A.16.1.4
- Floor and roof assemblies, test of 16.2
- Load-bearing assemblies, tests of 16.4
- Protective membranes, performance of 16.3

Copyright National Fire Protection Association
Provided by IHS under license with NFPA
No reproduction or networking permitted without license from IHS
Not for Resale

Restrained beams
Alternative procedure for 13.1
Guide for determining conditions of restraint ..... A.11.1.2, Annex E
Loaded restrained, tests of ..... Chap. 12
Steel beams, alternative test of protection for 14.2.2, 14.2.3
Restrained floor and roof assemblies
Guide for determining conditions of restraint ..... A.11.1.2, Annex E
Tests 11.1.2, 11.2.4, 11.5
Restraint conditions ..... 16.2.1, G.10.3, G.10.4; *see also* Restrained beams; Restrained floor and roof assemblies
Columns ..... 10.2.2 to 10.2.4
Common types of construction ..... E.1.5, Table E.1.5
Girders 14.2.2, 14.2.3
Guide for determining conditions of ..... A.11.1.2, Annex E
Walls and partitions, bearing 7.1.2
Roof assemblies .....*see* Floor and roof assemblies, tests of
Roof coverings 5.1.3

-S-

Scope of standard 1.1, A.1.1, G.4
Shall (definition) 3.2.1
Should (definition) 3.2.2
Significance of standard G.4
Specimens, test ..... Chap. 5, G.7
Protection and conditioning 5.2, A.5.2.6, A.5.2.8, G.7.2
Size and characteristics 5.1, G.7.1
Bearing walls and partitions, tests of 7.1
Columns, tests of 9.1
Floor and roof assemblies, tests of 11.2
Loaded restrained beams, tests of 12.2
Membranes, protective 15.2
Nonbearing walls and partitions, tests of 8.1
Steel columns and beams, alternative tests of protection for 10.2, 14.2
Standard (definition) 3.2.3
Steel, structural, alternative tests of protection for
Beams and girders ..... Chap. 14
Columns ..... Chap. 10
Exposure to Fire 10.4

-T-

Temperature .....*see also* Temperature–time curve
Fire severity defined by G.3.2
Furnace 4.2, A.4.2
Measurement
Beams 13.2, 14.3
Floor and roof assemblies, tests of 11.4, A.11.4.4, A.11.4.5
Steel columns and beams, alternative tests of protection for 10.3, 14.3
Membranes, protective, performance of 15.3
Unexposed surfaces of floors, roofs, walls, and partitions 4.3, A.4.3.1
Temperature–time curve 4.1, A.4.1.1, B.1, G.6
Test specimens .....*see* Specimens, test
Thermocouple pads, recommendations for ..... Annex C

-U-

Units of measurement 1.4

-W-

Walls and partitions G.1.2
Bearing, tests of ..... Chap. 7, 16.4, G.8.3
Double G.8.5
Exterior G.7.3
Fire resistance test 6.1, 7.3, 8.2, 16.1, G.8.3
Furnace temperatures 4.2.1, A.4.2.1
Hose stream test 6.2, 7.3, 8.2, D.6, G.8.3, G.9
Loading .....*see* Loading
Nonbearing, tests of ..... Chap. 8
Performance of protective membranes ..... Chap. 15, 16.3
Report of results 16.1, 16.3, 16.4
Symmetrical/asymmetrical G.7.5
Through-joints, effect of G.7.4
Unexposed surfaces, temperature of 4.3, A.4.3.1

Copyright National Fire Protection Association
Provided by IHS under license with NFPA
No reproduction or networking permitted without license from IHS
Not for Resale

Sequence of Events Leading to Publication of an NFPA Committee Document

Call goes out for proposals to amend existing document or for recommendations on new document.

▼

Committee meets to act on proposals, to develop its own proposals, and to prepare its report.

▼

Committee votes on proposals by letter ballot. If two-thirds approve, report goes forward. Lacking two-thirds approval, report returns to committee.

▼

Report — *Report on Proposals* (ROP) — is published for public review and comment.

▼

Committee meets to act on each public comment received.

▼

Committee votes on comments by letter ballot. If two-thirds approve, supplementary report goes forward. Lacking two-thirds approval, supplementary report returns to committee.

▼

Supplementary report — *Report on Comments* (ROC) — is published for public review.

▼

NFPA membership meets (Annual or Fall Meeting) and acts on committee report (ROP or ROC).

▼

Committee votes on any amendments to report approved at NFPA Annual or Fall Meeting.

▼

Appeals to Standards Council on Association action must be filed within 20 days of the NFPA Annual or Fall Meeting.

▼

Standards Council decides, based on all evidence, whether or not to issue standard or to take other action, including upholding any appeals.

Committee Membership Classifications

The following classifications apply to Technical Committee members and represent their principal interest in the activity of the committee.

M *Manufacturer:* A representative of a maker or marketer of a product, assembly, or system, or portion thereof, that is affected by the standard.

U *User:* A representative of an entity that is subject to the provisions of the standard or that voluntarily uses the standard.

I/M *Installer/Maintainer:* A representative of an entity that is in the business of installing or maintaining a product, assembly, or system affected by the standard.

L *Labor:* A labor representative or employee concerned with safety in the workplace.

R/T *Applied Research/Testing Laboratory:* A representative of an independent testing laboratory or independent applied research organization that promulgates and/or enforces standards.

E *Enforcing Authority:* A representative of an agency or an organization that promulgates and/or enforces standards.

I *Insurance:* A representative of an insurance company, broker, agent, bureau, or inspection agency.

C *Consumer:* A person who is, or represents, the ultimate purchaser of a product, system, or service affected by the standard, but who is not included in the *User* classification.

SE *Special Expert:* A person not representing any of the previous classifications, but who has a special expertise in the scope of the standard or portion thereof.

NOTES:

1. "Standard" connotes code, standard, recommended practice, or guide.
2. A representative includes an employee.
3. While these classifications will be used by the Standards Council to achieve a balance for Technical Committees, the Standards Council may determine that new classifications of members or unique interests need representation in order to foster the best possible committee deliberations on any project. In this connection, the Standards Council may make such appointments as it seems appropriate in the public interest, such as the classification of "Utilities" in the National Electrical Code Committee.
4. Representatives of subsidiaries of any group are generally considered to have the same classification as the parent organization.

Copyright National Fire Protection Association
Provided by IHS under license with NFPA
No reproduction or networking permitted without license from IHS
Not for Resale

NFPA Technical Committee Document Proposal Form

Note: All proposals must be received by 5:00 p.m. EST/EDST on the published proposal closing date.

For further information on the standards-making process, please contact Codes and Standards Administration at 617-984-7249. For technical assistance, please call NFPA at 617-770-3000.

FOR OFFICE USE ONLY
Log #: _____
Date Rec'd: _____

Please indicate in which format you wish to receive your ROP/ROC: ☐ **CD ROM** ☐ **paper** ☐ **download**
(Note: In choosing the download option you intend to view the ROP/ROC from our Website. No copy will be sent to you.)

Date 12/18/02 **Name** John B. Smith **Telephone** 617-555-1212
Company _____
Address 9 Seattle St. **City** Seattle **State** WA **Zip** 02255
Please indicate organization represented (if any) Fire Marshals Assn. of North America

1. **a) NFPA Document Title** National Fire Alarm Code
   b) NFPA No. & Edition NFPA 72, 2002 ed. **c) Section/Paragraph** 4.4.7.1.1

2. **Proposal Recommends:** *(check one)* ☐ **new text** ☐ **revised text** ☒ **deleted text**

3. **Proposal.** *(Include proposed new or revised wording, or identification of wording to be deleted.)* Note: Proposed text should be in legislative format, that is, use underscore to denote wording to be inserted (inserted wording) and strike-through to denote wording to be deleted (~~deleted wording~~). Delete exception.

4. **Statement of Problem and Substantiation for Proposal.** Note: State the problem that will be resolved by your recommendation. Give the specific reason for your proposal including copies of tests, research papers, fire experience, etc. If more than 200 words, it may be abstracted for publication. A properly installed and maintained system should be free of ground faults. The occurrence of one or more ground faults should be required to cause a "trouble" signal because it indicates a condition that could contribute to future malfunction of the system. Ground fault protection has been widely available on these systems for years and its cost is negligible. Requiring it on all systems will promote better installations, maintenance and reliability.

5. ☒ **This Proposal is Original Material.** Note: Original material is considered to be the submitter's own idea based on or as a result of his/her own experience, thought, or research and, to the best of his/her knowledge, is not copied from another source.

   ☐ **This Proposal is Not Original Material; Its Source** ***(if known)*** **is as Follows:** _____

Sample

I hereby grant the NFPA all and full rights in copyright to this proposal, and I understand that I acquire no rights in any publication of NFPA in which this proposal in this or another similar or analogous form is used.

Signature ***(Required)*** John B. Smith

PLEASE USE SEPARATE FORM FOR EACH PROPOSAL • NFPA FAX (617) 770-3500

Mail to: Secretary, Standards Council • NFPA • 1 Batterymarch Park • PO Box 9101 • Quincy, MA 02269-9101

Copyright National Fire Protection Association
Provided by IHS under license with NFPA
No reproduction or networking permitted without license from IHS
Not for Resale

NFPA Technical Committee Document Proposal Form

Note: All proposals must be received by 5:00 p.m. EST/EDST on the published proposal closing date.

For further information on the standards-making process, please contact Codes and Standards Administration at 617-984-7249. For technical assistance, please call NFPA at 617-770-3000.

FOR OFFICE USE ONLY
Log #: _____
Date Rec'd: _____

Please indicate in which format you wish to receive your ROP/ROC: ☐ **CD ROM** ☐ **paper** ☐ **download**
(Note: In choosing the download option you intend to view the ROP/ROC from our Website. No copy will be sent to you.)

Date _____ **Name** _____ **Telephone** _____
Company _____
Address _____ **City** _____ **State** _____ **Zip** _____
Please indicate organization represented (if any) _____

1. **a) NFPA Document Title** _____
   b) NFPA No. & Edition _____ **c) Section/Paragraph** _____
2. **Proposal Recommends:** *(check one)* ☐ **new text** ☐ **revised text** ☐ **deleted text**
3. **Proposal.** *(Include proposed new or revised wording, or identification of wording to be deleted.)* Note: Proposed text should be in legislative format, that is, use underscore to denote wording to be inserted (inserted wording) and strike-through to denote wording to be deleted (~~deleted wording~~). _____
4. **Statement of Problem and Substantiation for Proposal.** Note: State the problem that will be resolved by your recommendation. Give the specific reason for your proposal including copies of tests, research papers, fire experience, etc. If more than 200 words, it may be abstracted for publication. _____
5. ☐ **This Proposal is Original Material.** Note: Original material is considered to be the submitter's own idea based on or as a result of his/her own experience, thought, or research and, to the best of his/her knowledge, is not copied from another source.

   ☐ **This Proposal is Not Original Material; Its Source *(if known)* is as Follows:** _____

I hereby grant the NFPA all and full rights in copyright to this proposal, and I understand that I acquire no rights in any publication of NFPA in which this proposal in this or another similar or analogous form is used.

Signature *(Required)* _____

PLEASE USE SEPARATE FORM FOR EACH PROPOSAL • NFPA FAX (617) 770-3500

Mail to: Secretary, Standards Council • NFPA • 1 Batterymarch Park • PO Box 9101 • Quincy, MA 02269-9101

--`,,```,,-`-`,,`,,`,`,,`---

Copyright National Fire Protection Association
Provided by IHS under license with NFPA
No reproduction or networking permitted without license from IHS

Not for Resale