NFPA® 25

Standard for the Inspection, Testing, and Maintenance of Water-Based Fire Protection Systems

2008 Edition

NFPA, 1 Batterymarch Park, Quincy, MA 02169-7471
An International Codes and Standards Organization

Copyright National Fire Protection Association
Provided by IHS under license with NFPA
No reproduction or networking permitted without license from IHS
Not for Resale

IMPORTANT NOTICES AND DISCLAIMERS CONCERNING NFPA DOCUMENTS

NOTICE AND DISCLAIMER OF LIABILITY CONCERNING THE USE OF NFPA DOCUMENTS

NFPA codes, standards, recommended practices, and guides, of which the document contained herein is one, are developed through a consensus standards development process approved by the American National Standards Institute. This process brings together volunteers representing varied viewpoints and interests to achieve consensus on fire and other safety issues. While the NFPA administers the process and establishes rules to promote fairness in the development of consensus, it does not independently test, evaluate, or verify the accuracy of any information or the soundness of any judgments contained in its codes and standards.

The NFPA disclaims liability for any personal injury, property or other damages of any nature whatsoever, whether special, indirect, consequential or compensatory, directly or indirectly resulting from the publication, use of, or reliance on this document. The NFPA also makes no guaranty or warranty as to the accuracy or completeness of any information published herein.

In issuing and making this document available, the NFPA is not undertaking to render professional or other services for or on behalf of any person or entity. Nor is the NFPA undertaking to perform any duty owed by any person or entity to someone else. Anyone using this document should rely on his or her own independent judgment or, as appropriate, seek the advice of a competent professional in determining the exercise of reasonable care in any given circumstances.

The NFPA has no power, nor does it undertake, to police or enforce compliance with the contents of this document. Nor does the NFPA list, certify, test or inspect products, designs, or installations for compliance with this document. Any certification or other statement of compliance with the requirements of this document shall not be attributable to the NFPA and is solely the responsibility of the certifier or maker of the statement.

--`,,```,,,,````-`-`,,`,,`,`,,`---

Copyright National Fire Protection Association
Provided by IHS under license with NFPA
No reproduction or networking permitted without license from IHS

Not for Resale

ADDITIONAL NOTICES AND DISCLAIMERS

Updating of NFPA Documents

Users of NFPA codes, standards, recommended practices, and guides should be aware that these documents may be superseded at any time by the issuance of new editions or may be amended from time to time through the issuance of Tentative Interim Amendments. An official NFPA document at any point in time consists of the current edition of the document together with any Tentative Interim Amendments and any Errata then in effect. In order to determine whether a given document is the current edition and whether it has been amended through the issuance of Tentative Interim Amendments or corrected through the issuance of Errata, consult appropriate NFPA publications such as the National Fire Codes® Subscription Service, visit the NFPA website at www.nfpa.org, or contact the NFPA at the address listed below.

Interpretations of NFPA Documents

A statement, written or oral, that is not processed in accordance with Section 6 of the Regulations Governing Committee Projects shall not be considered the official position of NFPA or any of its Committees and shall not be considered to be, nor be relied upon as, a Formal Interpretation.

Patents

The NFPA does not take any position with respect to the validity of any patent rights asserted in connection with any items which are mentioned in or are the subject of NFPA codes, standards, recommended practices, and guides, and the NFPA disclaims liability for the infringement of any patent resulting from the use of or reliance on these documents. Users of these documents are expressly advised that determination of the validity of any such patent rights, and the risk of infringement of such rights, is entirely their own responsibility.

NFPA adheres to applicable policies of the American National Standards Institute with respect to patents. For further information contact the NFPA at the address listed below.

Law and Regulations

Users of these documents should consult applicable federal, state, and local laws and regulations. NFPA does not, by the publication of its codes, standards, recommended practices, and guides, intend to urge action that is not in compliance with applicable laws, and these documents may not be construed as doing so.

Copyrights

This document is copyrighted by the NFPA. It is made available for a wide variety of both public and private uses. These include both use, by reference, in laws and regulations, and use in private self-regulation, standardization, and the promotion of safe practices and methods. By making this document available for use and adoption by public authorities and private users, the NFPA does not waive any rights in copyright to this document.

Use of NFPA documents for regulatory purposes should be accomplished through adoption by reference. The term "adoption by reference" means the citing of title, edition, and publishing information only. Any deletions, additions, and changes desired by the adopting authority should be noted separately in the adopting instrument. In order to assist NFPA in following the uses made of its documents, adopting authorities are requested to notify the NFPA (Attention: Secretary, Standards Council) in writing of such use. For technical assistance and questions concerning adoption of NFPA documents, contact NFPA at the address below.

For Further Information

All questions or other communications relating to NFPA codes, standards, recommended practices, and guides and all requests for information on NFPA procedures governing its codes and standards development process, including information on the procedures for requesting Formal Interpretations, for proposing Tentative Interim Amendments, and for proposing revisions to NFPA documents during regular revision cycles, should be sent to NFPA headquarters, addressed to the attention of the Secretary, Standards Council, NFPA, 1 Batterymarch Park, P.O. Box 9101, Quincy, MA 02269-9101.

For more information about NFPA, visit the NFPA website at www.nfpa.org.

--`,,```,,,,````-`-`,,`,,`,`,,`---
Copyright National Fire Protection Association
Provided by IHS under license with NFPA
No reproduction or networking permitted without license from IHS
Not for Resale

Copyright © 2007 National Fire Protection Association®. All Rights Reserved.

NFPA® 25

Standard for the

Inspection, Testing, and Maintenance of Water-Based Fire Protection Systems

2008 Edition

This edition of NFPA 25, *Standard for the Inspection, Testing, and Maintenance of Water-Based Fire Protection Systems*, was prepared by the Technical Committee on Inspection, Testing, and Maintenance of Water-Based Systems and acted on by NFPA at its June Association Technical Meeting held June 3–7, 2007, in Boston, MA. It was issued by the Standards Council on July 26, 2007, with an effective date of August 15, 2007, and supersedes all previous editions.

This edition of NFPA 25 was approved as an American National Standard on August 15, 2007.

Origin and Development of NFPA 25

The first edition of NFPA 25 was a collection of inspection, testing, and maintenance provisions that helped ensure the successful operation of water-based fire protection systems. NFPA 25 was developed as an extension of existing documents such as NFPA 13A, *Recommended Practice for the Inspection, Testing, and Maintenance of Sprinkler Systems,* and NFPA 14A, *Recommended Practice for the Inspection, Testing, and Maintenance of Standpipe and Hose Systems,* which have successfully assisted authorities having jurisdiction and property owners with routine inspections of sprinkler systems and standpipes. These documents have since been withdrawn from the NFPA standards system. NFPA 25 became the main document governing sprinkler systems as well as related systems, including underground piping, fire pumps, storage tanks, water spray systems, and foam-water sprinkler systems.

This document provides instruction on how to conduct inspection, testing, and maintenance activities. It also stipulates how often such activities are required to be completed. Requirements are provided for impairment procedures, notification processes, and system restoration. This type of information, where incorporated into a building maintenance program, enhances the demonstrated favorable experience of all water-based fire protection systems.

The second edition incorporated several improvements that reflected the initial experience with the standard. A new chapter was added that addresses obstructions in pipe as well as appropriate corrective actions.

The third edition refined testing requirements and frequencies and provided additional guidance for preplanned impairment programs. The document scope was expanded to include marine systems.

The fourth edition continued to refine testing frequencies for water-flow devices and evaluation of the annual fire pump test data. This edition also included additional information regarding evaluation and test methods for microbiologically influenced corrosion (MIC).

This fifth edition increased the requirement for record retention from one year to five years in order to establish sufficient performance, data to determine a performance trend with particular concern for degradation in system or component performance. A section permitting performance-based testing was added, providing guidance on alternative means for determining testing frequencies based on system/component failure rates. Component replacement testing tables were introduced in this edition to provide guidance for the appropriate tests to be performed following replacement of system components. Inspection, testing, and maintenance requirements for water mist systems were extracted from NFPA 750 and were inserted into a new chapter. This action consolidates inspection, testing, and maintenance requirements for all water-based fire protection systems into one document.

NFPA and National Fire Protection Association are registered trademarks of the National Fire Protection Association, Quincy, Massachusetts, 02169.

--`,,```,,,,````-`-`,,`,,`,`,,`---

Copyright National Fire Protection Association
Provided by IHS under license with NFPA
No reproduction or networking permitted without license from IHS

Not for Resale

Technical Committee on Inspection, Testing, and Maintenance of Water-Based Systems

Kenneth W. Linder, *Chair*
Swiss Re, Global Asset Protection Services, CT [I]

Clement J. Adams, Chubb Group of Insurance Companies, PA [I]
Gary S. Andress, Liberty Mutual Property, MA [I]
Kerry M. Bell, Underwriters Laboratories Incorporated, IL [RT]
Michael J. Bosma, The Viking Corporation, MI [M]
Rep. National Fire Sprinkler Association
John K. Bouchard, Wachovia Insurance Services, MA [I]
Eugene A. Cable, U.S. Department of Veterans Affairs, NY [U]
James M. Fantauzzi, North East Fire Protection Systems Incorporated, NY [IM]
Rep. American Fire Sprinkler Association
James M. Feld, Feld Engineering, CA [SE]
Gary R. Field, Automatic Protection Systems Corporation, OK [IM]
Rep. National Association of Fire Equipment Distributors
David B. Fuller, FM Global, MA [I]
Gary Gagnon, Alcan, Inc., Canada [U]
Stephen R. Hoover, Stephen R. Hoover Associates, IL [SE]
Daniel P. Jaugstetter, Kidde Fire Fighting USA, GA [M]
Rep. Fire Equipment Manufacturers' Association
Larry Keeping, Vipond Fire Protection, Canada [IM]
Rep. Canadian Automatic Sprinkler Association
John Lake, Marion County Fire Rescue, FL [E]
Russell B. Leavitt, TVA Fire & Life Safety, Incorporated, AZ [U]
Rep. The Home Depot
Frank L. Moore, Moore Pump and Equipment, Inc., MS [IM]
John D. Munno, Dominion Resources Inc., VA [U]
Rep. Edison Electric Institute
Miles Myers, Myers Risk Services, Inc., PA [SE]
Richard Oliver, Oliver Sprinkler Company, Inc., PA [IM]
Rep. National Fire Sprinkler Association
Eric Packard, Local 669 JATC Education Fund, MD [L]
Rep. United Association of Journeymen and Apprentices of the Plumbing and Pipe Fitting Industry of the United States and Canada
Gayle Pennel, Schirmer Engineering Corporation, IL [I]
Rep. TC on Fire Pumps
John F. Saidi, University of California, CA [U]
Bill Sheppard, General Motors Corporation, MI [U]
Rep. NFPA Industrial Fire Protection Section
Gregory R. "Chip" Stein, Tank Industry Consultants, IN [SE]
Terry L. Victor, Tyco/Simplex Grinnell Fire Protection, MD [M]
John Whitney, Clarke Fire Protection Products, Incorporated, OH [M]
Rep. Engine Manufacturers Association

Alternates

John A. Beukema, Reliable Automatic Sprinkler Company, NY [M]
(Alt. to M. J. Bosma)
Bruce H. Clarke, Swiss Re, Global Asset Protection Services, NC [I]
(Alt. to K. W. Linder)
Matthew G. Drysdale, E. I. duPont de Nemours & Company, Incorporated, DE [U]
(Alt. to B. Sheppard)
Russell P. Fleming, National Fire Sprinkler Association, NY [IM]
(Alt. to R. Oliver)
Ronald J. Huggins, American Fire Sprinkler Association, Inc., TX [IM]
(Alt. to J. M. Fantauzzi)
Peter A. Larrimer, U.S. Department of Veterans Affairs, PA [U]
(Alt. to E. A. Cable)
George E. Laverick, Underwriters Laboratories Incorporated, IL [RT]
(Alt. to K. M. Bell)
Matthew Osburn, Canadian Automatic Sprinkler Association, Canada [IM]
(Alt. to L. Keeping)
Ronald Rispoli, Entergy Corporation, AR [U]
(Alt. to J. D. Munno)
Peter W. Thomas, Tyco Fire Products, RI [M]
(Alt. to T. L. Victor)
Ralph Tiede, Liberty Mutual Property, MA [I]
(Alt. to G. S. Andress)
Barry J. Waterman, Acme Sprinkler Service Co., IL [M]
(Alt. to IFPA Rep.)

Nonvoting

Rohit Khanna, U.S. Consumer Product Safety Commission, MD [C]
Thomas F. Norton, Norel Service Company, Inc., MA [M]
Rep. National Fire Alarm Code Committee

David R. Hague, NFPA Staff Liaison

This list represents the membership at the time the Committee was balloted on the final text of this edition. Since that time, changes in the membership may have occurred. A key to classifications is found at the back of the document.

NOTE: Membership on a committee shall not in and of itself constitute an endorsement of the Association or any document developed by the committee on which the member serves.

Committee Scope: This Committee shall have primary responsibility for documents on inspection, testing, and maintenance of systems utilizing water as a method of extinguishment. These include sprinkler systems, standpipe and hose systems, fire service piping and appurtenances, fire pumps, water storage tanks, fixed water spray systems, foam-water systems, valves, and allied equipment. This Committee shall also develop procedures for the conduct and reporting of routine system impairments.

Copyright National Fire Protection Association
Provided by IHS under license with NFPA
No reproduction or networking permitted without license from IHS
Not for Resale

Contents

Chapter 1 Administration **25–** 5
1.1 Scope **25–** 5
1.2 Purpose **25–** 5
1.3 Application **25–** 5
1.4 Units **25–** 5

Chapter 2 Referenced Publications **25–** 5
2.1 General **25–** 5
2.2 NFPA Publications **25–** 5
2.3 Other Publications **25–** 6
2.4 References for Extracts in Mandatory Sections **25–** 6

Chapter 3 Definitions **25–** 6
3.1 General **25–** 6
3.2 NFPA Official Definitions **25–** 6
3.3 General Definitions **25–** 6
3.4 Deluge Foam-Water Sprinkler and Foam-Water Spray Systems Definitions **25–** 9
3.5 Valve Definitions **25–** 9
3.6 Water-Based Fire Protection System Definitions **25–** 9

Chapter 4 General Requirements **25–**10
4.1 Responsibility of the Property Owner or Occupant **25–**10
4.2 Impairments **25–**11
4.3 Corrective Action **25–**11
4.4 Records **25–**11
4.5 Inspection **25–**11
4.6 Testing **25–**11
4.7 Maintenance **25–**11
4.8 Safety **25–**11
4.9 Electrical Safety **25–**11

Chapter 5 Sprinkler Systems **25–**11
5.1 General **25–**11
5.2 Inspection **25–**12
5.3 Testing **25–**13
5.4 Maintenance **25–**14
5.5 Component Action Requirements **25–**15

Chapter 6 Standpipe and Hose Systems **25–**17
6.1 General **25–**17
6.2 Inspection **25–**17
6.3 Testing **25–**17
6.4 Maintenance **25–**19
6.5 Component Action Requirements **25–**19

Chapter 7 Private Fire Service Mains **25–**20
7.1 General **25–**20
7.2 Inspection **25–**20
7.3 Testing **25–**21
7.4 Maintenance **25–**22
7.5 Component Action Requirements **25–**22

Chapter 8 Fire Pumps **25–**23
8.1 General **25–**23
8.2 Inspection **25–**23
8.3 Testing **25–**24
8.4 Reports **25–**25
8.5 Maintenance **25–**25
8.6 Component Replacement Testing Requirements **25–**26

Chapter 9 Water Storage Tanks **25–**29
9.1 General **25–**29
9.2 Inspection **25–**29
9.3 Testing **25–**31
9.4 Maintenance **25–**31
9.5 Automatic Tank Fill Valves **25–**31
9.6 Component Action Requirements **25–**31

Chapter 10 Water Spray Fixed Systems **25–**32
10.1 General **25–**32
10.2 Inspection and Maintenance Procedures **25–**34
10.3 Operational Tests **25–**35
10.4 Ultra-High-Speed Water Spray System (UHSWSS) Operational Tests **25–**35
10.5 Component Action Requirements **25–**36

Chapter 11 Foam-Water Sprinkler Systems **25–**37
11.1 General **25–**37
11.2 Inspection **25–**38
11.3 Operational Tests **25–**39
11.4 Maintenance **25–**40
11.5 Component Action Requirements **25–**41

Chapter 12 Water Mist Systems **25–**42
12.1 Responsibility of the Owner or Occupant **25–**42
12.2 Inspection and Testing **25–**42
12.3 Maintenance **25–**45
12.4 Training **25–**45

Chapter 13 Valves, Valve Components, and Trim **25–**45
13.1 General **25–**45
13.2 General Provisions **25–**47
13.3 Control Valves in Water-Based Fire Protection Systems **25–**47
13.4 System Valves **25–**48
13.5 Pressure Reducing Valves and Relief Valves **25–**50
13.6 Backflow Prevention Assemblies **25–**51
13.7 Fire Department Connections **25–**51

Copyright National Fire Protection Association
Provided by IHS under license with NFPA
No reproduction or networking permitted without license from IHS
Not for Resale

Chapter 14 Obstruction Investigation **25**–52
14.1 General **25**–52
14.2 Obstruction Investigation and Prevention **25**–52
14.3 Ice Obstruction **25**–52

Chapter 15 Impairments **25**–52
15.1 General **25**–52
15.2 Impairment Coordinator **25**–52
15.3 Tag Impairment System **25**–52
15.4 Impaired Equipment **25**–52
15.5 Preplanned Impairment Programs **25**–53
15.6 Emergency Impairments **25**–53
15.7 Restoring Systems to Service **25**–53

Annex A Explanatory Material **25**–53

Annex B Forms for Inspection, Testing, and Maintenance **25**–80

Annex C Possible Causes of Pump Troubles **25**–80

Annex D Obstruction Investigation **25**–83

Annex E Informational References **25**–90

Index **25**–92

Copyright National Fire Protection Association
Provided by IHS under license with NFPA
No reproduction or networking permitted without license from IHS
Not for Resale

NFPA 25

Standard for the

Inspection, Testing, and Maintenance of Water-Based Fire Protection Systems

2008 Edition

IMPORTANT NOTE: This NFPA document is made available for use subject to important notices and legal disclaimers. These notices and disclaimers appear in all publications containing this document and may be found under the heading "Important Notices and Disclaimers Concerning NFPA Documents." They can also be obtained on request from NFPA or viewed at www.nfpa.org/disclaimers.

NOTICE: An asterisk (*) following the number or letter designating a paragraph indicates that explanatory material on the paragraph can be found in Annex A.

Changes other than editorial are indicated by a vertical rule beside the paragraph, table, or figure in which the change occurred. These rules are included as an aid to the user in identifying changes from the previous edition. Where one or more complete paragraphs have been deleted, the deletion is indicated by a bullet (•) between the paragraphs that remain.

A reference in brackets [ ] following a section or paragraph indicates material that has been extracted from another NFPA document. As an aid to the user, the complete title and edition of the source documents for extracts in mandatory sections of the document are given in Chapter 2 and those for extracts in informational sections are given in Annex E. Editorial changes to extracted material consist of revising references to an appropriate division in this document or the inclusion of the document number with the division number when the reference is to the original document. Requests for interpretations or revisions of extracted text shall be sent to the technical committee responsible for the source document.

Information on referenced publications can be found in Chapter 2 and Annex E.

Chapter 1 Administration

1.1* Scope. This document establishes the minimum requirements for the periodic inspection, testing, and maintenance of water-based fire protection systems, including land-based and marine applications.

1.1.1 This standard does not address all of the inspection, testing, and maintenance of the electrical components of the automatic fire detection equipment for preaction and deluge systems that are addressed by *NFPA 72, National Fire Alarm Code*. The inspection, testing, and maintenance required by this standard and *NFPA 72, National Fire Alarm Code*, shall be coordinated so that the system operates as intended.

1.1.2 The types of systems addressed by this standard include, but are not limited to, sprinkler, standpipe and hose, fixed water spray, and foam water. Included are the water supplies that are part of these systems, such as private fire service mains and appurtenances, fire pumps and water storage tanks, and valves that control system flow. The document also addresses impairment handling and reporting. This standard applies to fire protection systems that have been properly installed in accordance with generally accepted practices. Where a system has not been installed in accordance with generally accepted practices, the corrective action is beyond the scope of this standard. The corrective action to ensure that the system performs in a satisfactory manner shall be in accordance with the appropriate installation standard.

1.1.3 This standard shall not apply to sprinkler systems designed and installed in accordance with NFPA 13D, *Standard for the Installation of Sprinkler Systems in One- and Two-Family Dwellings and Manufactured Homes*.

1.2* Purpose. The purpose of this document is to provide requirements that ensure a reasonable degree of protection for life and property from fire through minimum inspection, testing, and maintenance methods for water-based fire protection systems. In those cases where it is determined that an existing situation involves a distinct hazard to life or property, the authority having jurisdiction shall be permitted to require inspection, testing, and maintenance methods in excess of those required by the standard.

1.3* Application. It is not the intent of this document to limit or restrict the use of other inspection, testing, or maintenance programs that provide an equivalent level of system integrity and performance to that detailed in this document. The authority having jurisdiction shall be consulted and approval obtained for such alternative programs.

1.4* Units. Metric units of measurement in this standard are in accordance with the modernized metric system known as the International System of Units (SI).

1.4.1 If a value for measurement as given in this standard is followed by an equivalent value in other units, the first stated shall be regarded as the requirement. A given equivalent value shall be considered to be approximate.

1.4.2 SI units have been converted by multiplying the quantity by the conversion factor and then rounding the result to the appropriate number of significant digits. Where nominal or trade sizes exist, the nominal dimension has been recognized in each unit.

Chapter 2 Referenced Publications

2.1 General. The documents or portions thereof listed in this chapter are referenced within this standard and shall be considered part of the requirements of this document.

2.2 NFPA Publications. National Fire Protection Association, 1 Batterymarch Park, Quincy, MA 02169-7471.

NFPA 11, *Standard for Low-, Medium-, and High-Expansion Foam,* 2005 edition.

NFPA 13, *Standard for the Installation of Sprinkler Systems,* 2007 edition.

NFPA 13D, *Standard for the Installation of Sprinkler Systems in One- and Two-Family Dwellings and Manufactured Homes,* 2007 edition.

NFPA 14, *Standard for the Installation of Standpipe and Hose Systems,* 2007 edition.

NFPA 15, *Standard for Water Spray Fixed Systems for Fire Protection,* 2007 edition.

NFPA 16, *Standard for the Installation of Foam-Water Sprinkler and Foam-Water Spray Systems,* 2007 edition.

NFPA 20, *Standard for the Installation of Stationary Pumps for Fire Protection,* 2007 edition.

Copyright National Fire Protection Association
Provided by IHS under license with NFPA
No reproduction or networking permitted without license from IHS
Not for Resale

NFPA 22, *Standard for Water Tanks for Private Fire Protection,* 2003 edition.

NFPA 24, *Standard for the Installation of Private Fire Service Mains and Their Appurtenances,* 2007 edition.

NFPA 72®, National Fire Alarm Code®, 2007 edition.

NFPA 110, *Standard for Emergency and Standby Power Systems,* 2005 edition.

NFPA 307, *Standard for the Construction and Fire Protection of Marine Terminals, Piers, and Wharves,* 2006 edition.

NFPA 409, *Standard on Aircraft Hangars,* 2004 edition.

NFPA 750, *Standard on Water Mist Fire Protection Systems,* 2006 edition.

NFPA 1962, *Standard for the Inspection, Care, and Use of Fire Hose, Couplings, and Nozzles and the Service Testing of Fire Hose,* 2003 edition.

2.3 Other Publications.

2.3.1 ASTM Publications. ASTM International, 100 Barr Harbor Drive, P.O. Box C700, West Conshohocken, PA 19428-2959.

ASTM D 3359, *Standard Test Methods for Measuring Adhesion by Tape Test*, 1997.

2.3.2 Other Publications. *Merriam-Webster's Collegiate Dictionary*, 11th edition, Merriam-Webster, Inc., Springfield, MA, 2003.

2.4 References for Extracts in Mandatory Sections.

NFPA 11, *Standard for Low-, Medium-, and High-Expansion Foam,* 2005 edition.

NFPA 13, *Standard for the Installation of Sprinkler Systems,* 2007 edition.

NFPA 14, *Standard for the Installation of Standpipe and Hose Systems,* 2007 edition.

NFPA 15, *Standard for Water Spray Fixed Systems for Fire Protection,* 2007 edition.

NFPA 16, *Standard for the Installation of Foam-Water Sprinkler and Foam-Water Spray Systems,* 2007 edition.

NFPA 20, *Standard for the Installation of Stationary Pumps for Fire Protection,* 2007 edition.

NFPA 24, *Standard for the Installation of Private Fire Service Mains and Their Appurtenances,* 2007 edition.

NFPA 96, *Standard for Ventilation Control and Fire Protection of Commercial Cooking Operations,* 2008 edition.

NFPA 750, *Standard on Water Mist Fire Protection Systems,* 2006 edition.

NFPA 820, *Standard for Fire Protection in Wastewater Treatment and Collection Facilities,* 2008 edition.

NFPA 1071, *Standard for Emergency Vehicle Technician Professional Qualifications,* 2006 edition.

NFPA 1141, *Standard for Fire Protection Infrastructure for Land Development in Suburban and Rural Areas,* 2008 edition.

Chapter 3 Definitions

3.1 General. The definitions contained in this chapter shall apply to the terms used in this standard. Where terms are not defined in this chapter or within another chapter, they shall be defined using their ordinarily accepted meanings within the context in which they are used. *Merriam-Webster's Collegiate Dictionary*, 11th edition, shall be the source for the ordinarily accepted meaning.

3.2 NFPA Official Definitions.

3.2.1* Approved. Acceptable to the authority having jurisdiction.

3.2.2* Authority Having Jurisdiction (AHJ). An organization, office, or individual responsible for enforcing the requirements of a code or standard, or for approving equipment, materials, an installation, or a procedure.

3.2.3* Listed. Equipment, materials, or services included in a list published by an organization that is acceptable to the authority having jurisdiction and concerned with evaluation of products or services, that maintains periodic inspection of production of listed equipment or materials or periodic evaluation of services, and whose listing states that either the equipment, material, or service meets appropriate designated standards or has been tested and found suitable for a specified purpose.

3.2.4 Shall. Indicates a mandatory requirement.

3.2.5 Should. Indicates a recommendation or that which is advised but not required.

3.2.6 Standard. A document, the main text of which contains only mandatory provisions using the word "shall" to indicate requirements and which is in a form generally suitable for mandatory reference by another standard or code or for adoption into law. Nonmandatory provisions shall be located in an appendix or annex, footnote, or fine-print note and are not to be considered a part of the requirements of a standard.

3.3 General Definitions.

3.3.1 Alarm Receiving Facility. The place where alarm or supervisory signals are received. This can include proprietary supervising stations, central supervising stations, remote supervising stations, or public fire service communications centers.

3.3.2* Automatic Detection Equipment. Equipment that automatically detects heat, flame, products of combustion, flammable gases, or other conditions likely to produce fire or explosion and cause other automatic actuation of alarm and protection equipment.

3.3.3 Automatic Operation. Operation without human intervention. This operation includes, but is not limited to, heat, rate of heat rise, smoke, or pressure change.

3.3.4 Deficiency. A condition in which the application of the component is not within its designed limits or specifications. [**1071,** 2006]

3.3.5 Discharge Device. A device designed to discharge water or foam-water solution in a predetermined, fixed, or adjustable pattern. Examples include, but are not limited to, sprinklers, spray nozzles, and hose nozzles. [**16,** 2003]

3.3.6 Double Check Valve Assembly (DCVA). This assembly consists of two internally loaded check valves, either spring-loaded or internally weighted, installed as a unit between two tightly closing resilient-seated shutoff valves as an assembly, and fittings with properly located resilient-seated test cocks.

3.3.7 Drain.

3.3.7.1 ***Main Drain.*** The primary drain connection located on the system riser and also utilized as a flow test connection.

3.3.7.2 ***Sectional Drain.*** A drain located beyond a sectional control valve that drains only a portion of the system (e.g., a drain located beyond a floor control valve on a multi-story building).

Copyright National Fire Protection Association
Provided by IHS under license with NFPA
No reproduction or networking permitted without license from IHS
Not for Resale

3.3.8 Fire Department Connection. A connection through which the fire department can pump supplemental water into the sprinkler system, standpipe, or other system furnishing water for fire extinguishment to supplement existing water supplies.

3.3.9* Fire Hydrant. A valved connection on a water supply system having one or more outlets and that is used to supply hose and fire department pumpers with water. [**1141,** 2008]

3.3.9.1* ***Dry Barrel Hydrant (Frostproof Hydrant).*** This is the most common type of hydrant; it has a control valve below the frost line between the footpiece and the barrel. A drain is located at the bottom of the barrel above the control valve seat for proper drainage after operation.

3.3.9.2* ***Monitor Nozzle Hydrant.*** A hydrant equipped with a monitor nozzle capable of delivering more than 250 gpm (946 L/min).

3.3.9.3* ***Wall Hydrant.*** A hydrant mounted on the outside of a wall of a building, fed from interior piping, and equipped with control valves located inside the building that normally are key-operated from the building's exterior.

3.3.9.4* ***Wet Barrel Hydrant.*** A type of hydrant that sometimes is used where there is no danger of freezing weather. Each outlet on a wet barrel hydrant is provided with a valved outlet threaded for fire hose.

3.3.10* Foam Concentrate. A concentrated liquid foaming agent as received from the manufacturer. [**11,** 2005]

3.3.11 Foam Discharge Device. Any device that, when fed with a foam-water solution, produces foam. These devices shall be permitted to be non-air-aspirating (e.g., sprinklers, water nozzles) or air-aspirating (e.g., foam-water sprinklers, directional foam-water nozzles, foam nozzles). All discharge devices have a special pattern of distribution peculiar to the particular device.

3.3.12 Hose Connection. A combination of equipment provided for connection of a hose to the standpipe system that includes a hose valve with a threaded outlet. [**14,** 2007]

3.3.13* Hose House. An enclosure located over or adjacent to a hydrant or other water supply designed to contain the necessary hose nozzles, hose wrenches, gaskets, and spanners to be used in fire fighting in conjunction with and to provide aid to the local fire department.

3.3.14 Hose Nozzle. A device intended for discharging water for manual suppression or extinguishment of a fire.

3.3.15 Hose Station. A combination of a hose rack, hose nozzle, hose, and hose connection. [**14,** 2007]

3.3.16 Hose Storage Devices.

3.3.16.1* ***Conventional Pin Rack.*** A hose rack where the hose is folded vertically and attached over the pins.

3.3.16.2* ***Horizontal Rack.*** A hose rack where the hose is connected to the valve, then stack-folded horizontally to the top of the rack.

3.3.16.3* ***Hose Reel.*** A circular device used to store hose.

3.3.16.4* ***Semiautomatic Hose Rack Assembly.*** The same as a "conventional" pin rack or hose reel except that, after the valve is opened, a retaining device holds the hose and water until the last few feet are removed.

3.3.17* Impairment. A condition where a fire protection system or unit or portion thereof is out of order, and the condition can result in the fire protection system or unit not functioning in a fire event.

3.3.17.1 ***Emergency Impairment.*** A condition where a water-based fire protection system or portion thereof is out of order due to an unexpected occurrence, such as a ruptured pipe, an operated sprinkler, or an interruption of the water supply to the system.

3.3.17.2 ***Preplanned Impairment.*** A condition where a water-based fire protection system or a portion thereof is out of service due to work that has been planned in advance, such as revisions to the water supply or sprinkler system piping.

3.3.18 Inspection. A visual examination of a system or portion thereof to verify that it appears to be in operating condition and is free of physical damage. [**820,** 2008]

3.3.19 Inspection, Testing, and Maintenance Service. A service program provided by a qualified contractor or qualified property owner's representative in which all components unique to the property's systems are inspected and tested at the required times and necessary maintenance is provided. This program includes logging and retention of relevant records.

3.3.20 Maintenance. In water-based fire protection systems, work performed to keep equipment operable or to make repairs.

3.3.21 Manual Operation. Operation of a system or its components through human action.

3.3.22 Nozzles.

3.3.22.1* ***Monitor Nozzle.*** A device specifically designed with large, clear waterways to provide a powerful, far-reaching stream for the protection of large amounts of combustible materials, aircraft, tank farms, and any other special hazard locations where large amounts of water need to be instantly available without the delay of laying hose lines. The nozzle is normally fitted with one of three interchangeable tips that measure 1½ in., 1¾ in., and 2 in. (40 mm, 45 mm, and 50 mm) in diameter.

3.3.22.2* ***Water Spray Nozzle.*** An open or automatic water discharge device that, when discharging water under pressure, will distribute the water in a specific, directional pattern.

3.3.23 Orifice Plate Proportioning. This system utilizes an orifice plate(s) through which passes a specific amount of foam concentrate at a specific pressure drop across the orifice plate(s).

3.3.24* Pressure Regulating Device. A device designed for the purpose of reducing, regulating, controlling, or restricting water pressure. [**14,** 2007]

3.3.25 Pressure Restricting Device. A valve or device designed for the purpose of reducing the downstream water pressure under flowing (residual) conditions only. [**14,** 2007]

3.3.26* Pressure Vacuum Vent. A venting device mounted on atmospheric foam concentrate storage vessels to allow for concentrate expansion and contraction and for tank breathing during concentrate discharge or filling. At rest (static condition), this device is closed to prevent free breathing of the foam concentrate storage tank.

Copyright National Fire Protection Association
Provided by IHS under license with NFPA
No reproduction or networking permitted without license from IHS
Not for Resale

3.3.27* Proportioners.

3.3.27.1* *Bladder Tank Proportioner.* This system is similar to a standard pressure proportioner, except the foam concentrate is contained inside a diaphragm bag that is contained inside a pressure vessel. Operation is the same as a standard pressure proportioner, except that, because of the separation of the foam concentrate and water, this system can be used with all foam concentrates, regardless of specific gravity.

3.3.27.2* *In-Line Balanced Pressure Proportioner.* This system is similar to a standard balanced pressure system, except the pumped concentrate pressure is maintained at a fixed preset value. Balancing of water and liquid takes place at individual proportioners located in the system riser or in segments of multiple systems.

3.3.27.3* *Line Proportioner.* This system uses a venturi pickup-type device where water passing through the unit creates a vacuum, thereby allowing foam concentrate to be picked up from an atmospheric storage container.

3.3.27.4* *Standard Balanced Pressure Proportioner.* This system utilizes a foam concentrate pump. Foam concentrate is drawn from an atmospheric storage tank, is pressurized by the pump, and passes back through a diaphragm balancing valve to the storage tank. Water- and foam concentrate-sensing lines are directed to the balancing valve and maintain the foam liquid at a pressure equal to that of the water pressure. The two equal pressures are fed to the proportioner proper and are mixed at a predetermined rate.

3.3.27.5* *Standard Pressure Proportioner.* This system uses a pressure vessel containing foam concentrate. Water is supplied to the proportioner, which directs an amount of the supply downward onto the contained concentrate, thereby pressurizing the tank. Pressurized concentrate then is forced through an orifice back into the flowing water stream. This type of system is applicable for use with foam concentrates having a specific gravity substantially higher than water. It is not applicable for use with foam concentrates with a specific gravity at or near that of water.

3.3.28 Qualified. A competent and capable person or company that has met the requirements and training for a given field acceptable to the AHJ. [**96,** 2008]

3.3.29 Reduced-Pressure Principle Backflow Prevention Assembly (RPBA). Two independently acting check valves together with a hydraulically operating, mechanically independent pressure differential relief valve located between the check valves and below the first check valve. These units are located between two tightly closed resilient-seated shutoff valves, as an assembly, and are equipped with properly located resilient-seated test cocks.

3.3.30 Sprinklers.

3.3.30.1 *Corrosion-Resistant Sprinkler.* A sprinkler fabricated with corrosion-resistant material, or with special coatings or platings, to be used in an atmosphere that would normally corrode sprinklers. [**13,** 2007]

3.3.30.2 *Dry Sprinkler.* A sprinkler secured in an extension nipple that has a seal at the inlet end to prevent water from entering the nipple until the sprinkler operates. [**13,** 2007]

3.3.30.3 *Early Suppression Fast-Response (ESFR) Sprinkler.* A type of fast-response sprinkler that meets the criteria of 3.6.1(a)(1) of NFPA 13, *Standard for the Installation of Sprinkler Systems*, and is listed for its capability to provide fire suppression of specific high-challenge fire hazards. [**13,** 2007]

3.3.30.4 *Extended Coverage Sprinkler.* A type of spray sprinkler with maximum coverage areas as specified in Sections 8.8 and 8.9 of NFPA 13. [**13,** 2007]

3.3.30.5 *Large Drop Sprinkler.* A type of specific application control mode sprinkler that is capable of producing characteristic large water droplets and that is listed for its capability to provide fire control of specific high-challenge fire hazards. [**13,** 2007]

3.3.30.6 *Nozzles.* A device for use in applications requiring special water discharge patterns, directional spray, or other unusual discharge characteristics. [**13,** 2007]

3.3.30.7 *Old-Style/Conventional Sprinkler.* A sprinkler that directs from 40 percent to 60 percent of the total water initially in a downward direction and that is designed to be installed with the deflector either upright or pendent. [**13,** 2007]

3.3.30.8 *Open Sprinkler.* A sprinkler that does not have actuators or heat-responsive elements. [**13,** 2007]

3.3.30.9 *Ornamental/Decorative Sprinkler.* A sprinkler that has been painted or plated by the manufacturer. [**13,** 2007]

3.3.30.10 *Pendent Sprinkler.* A sprinkler designed to be installed in such a way that the water stream is directed downward against the deflector. [**13,** 2007]

3.3.30.11 *Quick-Response Early Suppression (QRES) Sprinkler.* A type of quick-response sprinkler that meets the criteria of 3.6.1(a)(1) of NFPA 13 and is listed for its capability to provide fire suppression of specific fire hazards. [**13,** 2007]

3.3.30.12 *Quick-Response Extended Coverage Sprinkler.* A type of quick-response sprinkler that meets the criteria of 3.6.1(a)(1) of NFPA 13 and complies with the extended protection areas defined in Chapter 8 of NFPA 13. [**13,** 2007]

3.3.30.13 *Quick-Response (QR) Sprinkler.* A type of spray sprinkler that meets the fast response criteria of 3.6.1(a)(1) of NFPA 13 and is listed as a quick-response sprinkler for its intended use. [**13,** 2007]

3.3.30.14 *Recessed Sprinkler.* A sprinkler in which all or part of the body, other than the shank thread, is mounted within a recessed housing. [**13,** 2007]

3.3.30.15 *Residential Sprinkler.* A type of fast-response sprinkler that meets the criteria of 3.6.1(a)(1) of NFPA 13 that has been specifically investigated for its ability to enhance survivability in the room of fire origin and is listed for use in the protection of dwelling units. [**13,** 2007]

3.3.30.16 *Special Sprinkler.* A sprinkler that has been tested and listed as prescribed in 8.4.8 of NFPA 13. [**13,** 2007]

3.3.30.17 *Spray Sprinkler.* A type of sprinkler listed for its capability to provide fire control for a wide range of fire hazards. [**13,** 2007]

3.3.30.18 *Standard Spray Sprinkler.* A spray sprinkler with maximum coverage areas as specified in Sections 8.6 and 8.7 of NFPA 13. [**13,** 2007]

3.3.30.19 *Upright Sprinkler.* A sprinkler designed to be installed in such a way that the water spray is directed upwards against the deflector. [**13,** 2007]

Copyright National Fire Protection Association
Provided by IHS under license with NFPA
No reproduction or networking permitted without license from IHS
Not for Resale

3.3.31* Standpipe System. An arrangement of piping, valves, hose connections, and allied equipment installed in a building or structure, with the hose connections located in such a manner that water can be discharged in streams or spray patterns through attached hose and nozzles, for the purpose of extinguishing a fire, thereby protecting a building or structure and its contents in addition to protecting the occupants. [**14,** 2007]

3.3.31.1 ***Dry Standpipe.*** A standpipe system designed to have piping contain water only when the system is being utilized.

3.3.31.1.1 ***Class I System.*** A system that provides 2½ in. (65 mm) hose connections to supply water for use by fire departments and those trained in handling heavy fire streams. [**14,** 2007]

3.3.31.1.2 ***Class II System.*** A system that provides 1½ in. (40 mm) hose stations to supply water for use primarily by trained personnel or by the fire department during initial response. [**14,** 2007]

3.3.31.1.3 ***Class III System.*** A system that provides 1½ in. (40 mm) hose stations to supply water for use by trained personnel and 2½ in. (65 mm) hose connections to supply a larger volume of water for use by fire departments and those trained in handling heavy fire streams. [**14,** 2007]

3.3.31.2 ***Manual Standpipe.*** Standpipe system that relies exclusively on the fire department connection to supply the system demand.

3.3.31.3 ***Wet Standpipe System.*** A standpipe system having piping containing water at all times. [**14,** 2007]

3.3.32* Strainer. A device capable of removing from the water all solids of sufficient size that are obstructing water spray nozzles.

3.3.33 Supervision. In water-based fire protection systems, a means of monitoring system status and indicating abnormal conditions.

3.3.34 Testing. A procedure used to determine the status of a system as intended by conducting periodic physical checks on waterbased fire protection systems such as waterflow tests, fire pump tests, alarm tests, and trip tests of dry pipe, deluge, or preaction valves. These tests follow up on the original acceptance test at intervals specified in the appropriate chapter of this standard.

3.3.35* Water Spray. Water in a form having a predetermined pattern, particle size, velocity, and density discharge from specially designed nozzles or devices. [**15,** 2007]

3.3.36 Water Supply. A source of water that provides the flows [gal/min (L/min)] and pressures [psi (bar)] required by the water-based fire protection system.

3.4 Deluge Foam-Water Sprinkler and Foam-Water Spray Systems Definitions.

3.4.1 Foam-Water Spray System. A special system that is pipe-connected to a source of foam concentrate and to a water supply. The system is equipped with foam-water spray nozzles for extinguishing agent discharge (foam followed by water or in reverse order) and for distribution over the area to be protected. System operation arrangements parallel those for foam-water sprinkler systems as described in the definition of Foam-Water Sprinkler System. [**16,** 2003]

3.4.2 Foam-Water Sprinkler System. A special system that is pipe-connected to a source of foam concentrate and to a water supply. The system is equipped with appropriate discharge devices for extinguishing agent discharge and for distribution over the area to be protected. The piping system is connected to the water supply through a control valve that usually is actuated by operation of automatic detection equipment that is installed in the same areas as the sprinklers. When this valve opens, water flows into the piping system, foam concentrate is injected into the water, and the resulting foam solution discharging through the discharge devices generates and distributes foam. Upon exhaustion of the foam concentrate supply, water discharge follows and continues until shut off manually. Systems can be used for discharge of water first, followed by discharge of foam for a specified period, and then followed by water until manually shut off. Existing deluge sprinkler systems that have been converted to the use of aqueous film-forming foam or film-forming fluoroprotein foam are classified as foam-water sprinkler systems. [**16,** 2003]

3.5 Valve Definitions.

3.5.1* Control Valve. A valve controlling flow to water-based fire protection systems. Control valves do not include hose valves, inspector's test valves, drain valves, trim valves for dry pipe, preaction and deluge valves, check valves, or relief valves.

3.5.2 Deluge Valve. A water supply control valve intended to be operated by actuation of an automatic detection system that is installed in the same area as the discharge devices. Each deluge valve is intended to be capable of automatic and manual operation.

3.5.3 Hose Valve. The valve to an individual hose connection. [**14,** 2007]

3.5.4 Pressure Control Valve. A pilot-operated pressure-reducing valve designed for the purpose of reducing the downstream water pressure to a specific value under both flowing (residual) and nonflowing (static) conditions. [**14,** 2007]

3.5.5 Pressure-Reducing Valve. A valve designed for the purpose of reducing the downstream water pressure under both flowing (residual) and nonflowing (static) conditions. [**14,** 2007]

3.5.5.1* ***Master Pressure Reducing Valve.*** A pressure reducing valve installed to regulate pressures in an entire fire protection system and/or standpipe system zone.

3.6 Water-Based Fire Protection System Definitions.

3.6.1 Combined Standpipe and Sprinkler System. A system where the water piping services both 2½ in. (65 mm) outlets for fire department use and outlets for automatic sprinklers.

3.6.2 Fire Pump. A pump that is a provider of liquid flow and pressure dedicated to fire protection. [**20,** 2007]

3.6.3* Private Fire Service Main. Private fire service main, as used in this standard, is that pipe and its appurtenances on private property (1) between a source of water and the base of the system riser for water-based fire protection systems, (2) between a source of water and inlets to foam-making systems, (3) between a source of water and the base elbow of private hydrants or monitor nozzles, and (4) used as fire pump suction and discharge piping, (5) beginning at the inlet side of the check valve on a gravity or pressure tank. [**24,** 2007]

3.6.4* Sprinkler System. For fire protection purposes, an integrated system of underground and overhead piping designed in accordance with fire protection engineering standards. The installation includes at least one automatic water supply which supplies one or more systems. The portion of the sprinkler system above ground is a network of specially sized or hydraulically

Copyright National Fire Protection Association
Provided by IHS under license with NFPA
No reproduction or networking permitted without license from IHS
Not for Resale

designed piping installed in a building, structure, or area, generally overhead, and to which sprinklers are attached in a systematic pattern. Each system has a control valve located in the system riser or its supply piping. Each sprinkler system includes a device for actuating an alarm when the system is in operation. The system is usually activated by heat from a fire and discharges water over the fire area. [**13,** 2007]

3.6.4.1 ***Antifreeze Sprinkler System.*** A wet pipe sprinkler system employing automatic sprinklers that are attached to a piping system that contains an antifreeze solution and that are connected to a water supply. The antifreeze solution is discharged, followed by water, immediately upon operation of sprinklers opened by heat from a fire. [**13,** 2007]

3.6.4.2 ***Deluge Sprinkler System.*** A sprinkler system employing open sprinklers that are attached to a piping system that is connected to a water supply through a valve that is opened by the operation of a detection system installed in the same areas as the sprinklers. When this valve opens, water flows into the piping system and discharges from all sprinklers attached thereto. [**13,** 2007]

3.6.4.3 ***Dry Pipe Sprinkler System.*** A sprinkler system employing automatic sprinklers that are attached to a piping system containing air or nitrogen under pressure, the release of which (as from the opening of a sprinkler) permits the water pressure to open a valve known as a dry pipe valve, and the water then flows into the piping system and out the opened sprinklers. [**13,** 2007]

3.6.4.4 ***Preaction Sprinkler System.*** A sprinkler system employing automatic sprinklers that are attached to a piping system that contains air that might or might not be under pressure, with a supplemental detection system installed in the same areas as the sprinklers. [**13,** 2007]

3.6.4.5* ***Wet Pipe Sprinkler System.*** A sprinkler system employing automatic sprinklers attached to a piping system containing water and connected to a water supply so that water discharges immediately from sprinklers opened by heat from a fire. [**13,** 2007]

3.6.5 Water Spray Fixed System. A special fixed pipe system connected to a reliable fire protection water supply and equipped with water spray nozzles for specific water discharge and distribution over the surface or area to be protected. The piping system is connected to the water supply through an automatically or manually actuated valve that initiates the flow of water. An automatic valve is actuated by operation of automatic detection equipment installed in the same areas as the water spray nozzles. (In special cases, the automatic detection system also is located in another area.)

3.6.6 Water Tank. A tank supplying water for water-based fire protection systems.

Chapter 4 General Requirements

4.1 Responsibility of the Property Owner or Occupant.

4.1.1* Responsibility for Inspection, Testing, and Maintenance. The property owner or occupant shall provide ready accessibility to components of water-based fire protection systems that require inspection, testing, or maintenance.

4.1.2* Accessibility. The responsibility for properly maintaining a water-based fire protection system shall be that of the owner of the property.

4.1.2.1 Inspection, testing, and maintenance shall be implemented in accordance with procedures meeting those established in this document and in accordance with the manufacturer's instructions.

4.1.2.2 These tasks shall be performed by personnel who have developed competence through training and experience.

4.1.2.3 Where the property owner is not the occupant, the property owner shall be permitted to pass on the authority for inspecting, testing, and maintaining the fire protection systems to the occupant, management firm, or managing individual through specific provisions in the lease, written use agreement, or management contract.

4.1.2.4 Where an occupant, management firm, or managing individual has received the authority for inspection, testing, and maintenance, the occupant, management firm, or managing individual shall comply with the requirements identified for the owner or occupant throughout this standard.

4.1.3 Notification of System Shutdown. The property owner or occupant shall notify the authority having jurisdiction, the fire department, if required, and the alarm-receiving facility before testing or shutting down a system or its supply.

4.1.3.1 The notification of system shutdown shall include the purpose for the shutdown, the system or component involved, and the estimated time of shutdown.

4.1.3.2 The authority having jurisdiction, the fire department, and the alarm-receiving facility shall be notified when the system, supply, or component is returned to service.

4.1.4* Corrections and Repairs. The property owner or occupant shall promptly correct or repair deficiencies, damaged parts, or impairments found while performing the inspection, test, and maintenance requirements of this standard.

4.1.4.1* Corrections and repairs shall be performed by qualified maintenance personnel or a qualified contractor.

4.1.5* Changes in Occupancy, Use, Process, or Materials. The property owner or occupant shall not make changes in the occupancy, the use or process, or the materials used or stored in the building without evaluation of the fire protection systems for their capability to protect the new occupancy, use, or materials.

4.1.5.1 The evaluation shall consider factors that include, but are not limited to, the following:

(1) Occupancy changes such as converting office or production space into warehousing
(2) Process or material changes such as metal stamping to molded plastics
(3) Building revisions such as relocated walls, added mezzanines, and ceilings added below sprinklers
(4) Removal of heating systems in spaces with piping subject to freezing

4.1.6 Addressing Changes in Hazard. Where changes in the occupancy, hazard, water supply, storage commodity, storage arrangement, building modification, or other condition that affects the installation criteria of the system are identified, the property owner or occupant shall promptly take steps, such as contacting a qualified contractor, consultant, or engineer, and

Copyright National Fire Protection Association
Provided by IHS under license with NFPA
No reproduction or networking permitted without license from IHS
Not for Resale

the authority having jurisdiction, to evaluate the adequacy of the installed system in order to protect the building or hazard in question.

4.1.6.1 Where the evaluation reveals a deficiency causing a threat to life or property, the property owner shall make appropriate corrections. All requirements of the authority having jurisdiction shall be followed.

4.1.7 Valve Location. The property owner shall ensure that responsible occupants are made aware of the location of the shutoff valves and the procedures for shutting down the system.

4.1.8 Information Sign. A permanently marked metal or rigid plastic information sign shall be placed at the system control riser supplying an antifreeze loop, dry system, preaction system, or auxiliary system control valve. Each sign shall be secured with a corrosion-resistant wire, chain, or other acceptable means and shall indicate the following information:

(1) Location of the area served by the system
(2) Location of auxiliary drains and low-point drains
(3) The presence and location of antifreeze or other auxiliary systems

4.2 Impairments.

4.2.1 Where an impairment to a water-based fire protection system occurs, the procedures outlined in Chapter 15 of this standard shall be followed, including the attachment of a tag to the impaired system.

4.2.2 Where a water-based fire protection system is returned to service following an impairment, the system shall be verified to be working properly by means of an appropriate inspection or test.

4.3 Corrective Action. Manufacturers shall be permitted to make modifications to their own listed product in the field with listed devices that restore the original performance as intended by the listing, where acceptable to the authority having jurisdiction.

4.4 Records.

4.4.1* Records shall be made for all inspections, tests, and maintenance of the system and its components and shall be made available to the authority having jurisdiction upon request.

4.4.2 Records shall indicate the procedure performed (e.g., inspection, test, or maintenance), the organization that performed the work, the results, and the date.

4.4.3* Records shall be maintained by the property owner.

4.4.4 As-built system installation drawings, hydraulic calculations, original acceptance test records, and device manufacturer's data sheets shall be retained for the life of the system.

4.4.5 Subsequent records shall be retained for a period of 1 year after the next inspection, test, or maintenance of that type required by the standard.

4.5* Inspection. System components shall be inspected at intervals specified in the appropriate chapters.

4.6 Testing.

4.6.1* All components and systems shall be tested to verify that they function as intended.

4.6.1.1 The frequency of tests shall be in accordance with this standard.

4.6.1.1.1* As an alternative means of compliance, subject to the authority having jurisdiction, components and systems shall be permitted to be inspected, tested and maintained under a performance-based program.

4.6.2 Fire protection system components shall be restored to full operational condition following testing, including reinstallation of plugs and caps for auxiliary drains and test valves.

4.6.3 During testing and maintenance, water supplies, including fire pumps, shall remain in service unless under constant attendance by qualified personnel or impairment procedures in Chapter 15 are followed.

4.6.4* Test results shall be compared with those of the original acceptance test (if available) and with the most recent test results.

4.6.5* When a major component or subsystem is rebuilt or replaced, the subsystem shall be tested in accordance with the original acceptance test required for that subsystem.

4.7* Maintenance. Maintenance shall be performed to keep the system equipment operable or to make repairs.

4.8 Safety. Inspection, testing, and maintenance activities shall be conducted in a safe manner.

4.8.1 Confined Spaces. Legally required precautions shall be taken prior to entering confined spaces such as tanks, valve pits, or trenches.

4.8.2 Fall Protection. Legally required equipment shall be worn or used to prevent injury from falls to personnel.

4.8.3 Hazards. Precautions shall be taken to address any hazards, such as protection against drowning where working on the top of a filled embankment or a supported, rubberized fabric tank, or over open water or other liquids.

4.8.4* Hazardous Materials.

4.8.4.1 Legally required equipment shall be used where working in an environment with hazardous materials present.

4.8.4.2 The property owner shall advise anyone performing inspection, testing, and maintenance on any system under the scope of this document, with regard to hazardous materials stored on the premises.

4.9* Electrical Safety. Legally required precautions shall be taken when testing or maintaining electric controllers for motor-driven fire pumps.

Chapter 5 Sprinkler Systems

5.1 General. This chapter shall provide the minimum requirements for the routine inspection, testing, and maintenance of sprinkler systems. Table 5.1 shall be used to determine the minimum required frequencies for inspection, testing, and maintenance.

5.1.1 Valves and Connections. Valves and fire department connections shall be inspected, tested, and maintained in accordance with Chapter 13.

5.1.2 Impairments. The procedures outlined in Chapter 15 shall be followed where an impairment to protection occurs.

Copyright National Fire Protection Association
Provided by IHS under license with NFPA
No reproduction or networking permitted without license from IHS
Not for Resale

Table 5.1 Summary of Sprinkler System Inspection, Testing, and Maintenance

Item	Frequency	Reference
Inspection		
Gauges (dry, preaction, and deluge systems)	Weekly/monthly	5.2.4.2, 5.2.4.3
Control valves	Weekly/monthly	Table 13.1
Waterflow devices	Quarterly	5.2.6
Valve supervisory devices	Quarterly	5.2.6
Supervisory signal devices (except valve supervisory switches)	Quarterly	5.2.6
Gauges (wet pipe systems)	Monthly	5.2.4.1
Hydraulic nameplate	Quarterly	5.2.7
Buildings	Annually (prior to freezing weather)	5.2.5
Hanger/seismic bracing	Annually	5.2.3
Pipe and fittings	Annually	5.2.2
Sprinklers	Annually	5.2.1
Spare sprinklers	Annually	5.2.1.3
Fire department connections	Quarterly	Table 13.1
Valves (all types)		Table 13.1
Obstruction	5 years	14.2.2
Test		
Waterflow devices	Quarterly/semiannually	5.3.3
Valves supervisory devices	Semiannually	Table 13.1
Supervisory signal devices (except valve supervisory switches)	Semiannually	Table 13.1
Main drain	Annually	Table 13.1
Antifreeze solution	Annually	5.3.4
Gauges	5 years	5.3.2
Sprinklers — extra-high temperature	5 years	5.3.1.1.1.3
Sprinklers — fast-response	At 20 years and every 10 years thereafter	5.3.1.1.1.2
Sprinklers	At 50 years and every 10 years thereafter	5.3.1.1.1
Maintenance		
Valves (all types)	Annually or as needed	Table 13.1
Obstruction investigation	5 years or as needed	13.2.1, 13.2.2
Low-point drains (dry pipe system)	Annually prior to freezing and as needed	13.4.4.3.2
Investigation		
Obstruction	As needed	14.2.1

5.1.3 Notification to Supervisory Service. To avoid false alarms where a supervisory service is provided, the alarm receiving facility shall be notified by the property owner or designated representative as follows:

(1) Before conducting any test or procedure that could result in the activation of an alarm
(2) After such tests or procedures are concluded

5.1.4 Hose connections shall be inspected, tested, and maintained in accordance with Chapters 6 and 13.

5.2* Inspection.

5.2.1 Sprinklers.

5.2.1.1* Sprinklers shall be inspected from the floor level annually.

5.2.1.1.1* Sprinklers shall not show signs of leakage; shall be free of corrosion, foreign materials, paint, and physical damage; and shall be installed in the proper orientation (e.g., upright, pendent, or sidewall).

5.2.1.1.2 Any sprinkler shall be replaced that has signs of leakage; is painted, other than by the sprinkler manufacturer, corroded, damaged, or loaded; or in the improper orientation.

5.2.1.1.3 Glass bulb sprinklers shall be replaced if the bulbs have emptied.

5.2.1.1.4* Sprinklers installed in concealed spaces such as above suspended ceilings shall not require inspection.

5.2.1.1.5 Sprinklers installed in areas that are inaccessible for safety considerations due to process operations shall be inspected during each scheduled shutdown.

5.2.1.1.6 Sprinklers that are subject to recall shall be replaced per the manufacturer's requirements.

5.2.1.2* The minimum clearance required by the installation standard shall be maintained below all sprinklers. Stock, furnishings, or equipment closer to the sprinkler than the clearance rules allow shall be corrected.

5.2.1.3 The supply of spare sprinklers shall be inspected annually for the following:

Copyright National Fire Protection Association
Provided by IHS under license with NFPA
No reproduction or networking permitted without license from IHS
Not for Resale

(1) The proper number and type of sprinklers
(2) A sprinkler wrench for each type of sprinkler

5.2.2* Pipe and Fittings. Sprinkler pipe and fittings shall be inspected annually from the floor level.

5.2.2.1 Pipe and fittings shall be in good condition and free of mechanical damage, leakage, and corrosion.

5.2.2.2 Sprinkler piping shall not be subjected to external loads by materials either resting on the pipe or hung from the pipe.

5.2.2.3* Pipe and fittings installed in concealed spaces such as above suspended ceilings shall not require inspection.

5.2.2.4 Pipe installed in areas that are inaccessible for safety considerations due to process operations shall be inspected during each scheduled shutdown.

5.2.3* Hangers and Seismic Braces. Sprinkler pipe hangers and seismic braces shall be inspected annually from the floor level.

5.2.3.1 Hangers and seismic braces shall not be damaged or loose.

5.2.3.2 Hangers and seismic braces that are damaged or loose shall be replaced or refastened.

5.2.3.3* Hangers and seismic braces installed in concealed spaces such as above suspended ceilings shall not require inspection.

5.2.3.4 Hangers installed in areas that are inaccessible for safety considerations due to process operations shall be inspected during each scheduled shutdown.

5.2.4 Gauges.

5.2.4.1* Gauges on wet pipe sprinkler systems shall be inspected monthly to ensure that they are in good condition and that normal water supply pressure is being maintained.

5.2.4.2 Gauges on dry, preaction, and deluge systems shall be inspected weekly to ensure that normal air and water pressures are being maintained.

5.2.4.3 Where air pressure supervision is connected to a constantly attended location, gauges shall be inspected monthly.

5.2.4.4* For dry pipe or preaction systems protecting freezers, in accordance with Figure A.5.2.4.4 the air pressure gauge near the compressor shall be compared weekly to the pressure gauge above the dry pipe or preaction valve. When the gauge near the compressor is reading higher than the gauge near the dry pipe valve, the air line in service shall be taken out of service, and the alternate air line opened to equalize the pressure. The air line taken out of service shall be internally inspected, shall have all ice blockage removed, and shall be reassembled for use as a future alternate air line.

5.2.5 Buildings. Annually, prior to the onset of freezing weather, buildings with wet pipe systems shall be inspected to verify that windows, skylights, doors, ventilators, other openings and closures, blind spaces, unused attics, stair towers, roof houses, and low spaces under buildings do not expose water-filled sprinkler piping to freezing and to verify that adequate heat [minimum 40°F (4.4°C)] is available.

5.2.6 Alarm Devices. Alarm devices shall be inspected quarterly to verify that they are free of physical damage.

5.2.7* Hydraulic Nameplate. The hydraulic nameplate for hydraulically designed systems shall be inspected quarterly to verify that it is attached securely to the sprinkler riser and is legible.

5.3 Testing.

5.3.1* Sprinklers.

5.3.1.1* Where required by this section, sample sprinklers shall be submitted to a recognized testing laboratory acceptable to the authority having jurisdiction for field service testing.

5.3.1.1.1 Where sprinklers have been in service for 50 years, they shall be replaced or representative samples from one or more sample areas shall be tested. Test procedures shall be repeated at 10-year intervals.

5.3.1.1.1.1 Sprinklers manufactured prior to 1920 shall be replaced.

5.3.1.1.1.2 Sprinklers manufactured using fast-response elements that have been in service for 20 years shall be replaced, or representative samples shall be tested. They shall be retested at 10-year intervals.

5.3.1.1.1.3* Representative samples of solder-type sprinklers with a temperature classification of extra high 325°F (163°C) or greater that are exposed to semicontinuous to continuous maximum allowable ambient temperature conditions shall be tested at 5-year intervals.

5.3.1.1.1.4 Where sprinklers have been in service for 75 years, they shall be replaced or representative samples from one or more sample areas shall be submitted to a recognized testing laboratory acceptable to the authority having jurisdiction for field service testing. Test procedures shall be repeated at 5-year intervals.

5.3.1.1.1.5* Dry sprinklers that have been in service for 10 years shall be replaced, or representative samples shall be tested. They shall be retested at 10-year intervals.

5.3.1.1.2* Where sprinklers are subjected to harsh environments, including corrosive atmospheres and corrosive water supplies, on a 5-year basis, sprinklers shall either be replaced or representative sprinkler samples shall be tested.

5.3.1.1.3 Where historical data indicate, longer intervals between testing shall be permitted.

5.3.1.2* A representative sample of sprinklers for testing per 5.3.1.1.1 shall consist of a minimum of not less than four sprinklers or 1 percent of the number of sprinklers per individual sprinkler sample, whichever is greater.

5.3.1.3 Where one sprinkler within a representative sample fails to meet the test requirement, all sprinklers within the area represented by that sample shall be replaced.

5.3.1.3.1 Manufacturers shall be permitted to make modifications to their own sprinklers in the field with listed devices that restore the original performance as intended by the listing, where acceptable to the authority having jurisdiction.

5.3.2* Gauges. Gauges shall be replaced every 5 years or tested every 5 years by comparison with a calibrated gauge. Gauges not accurate to within 3 percent of the full scale shall be recalibrated or replaced.

5.3.3 Alarm Devices.

5.3.3.1 Mechanical waterflow devices including, but not limited to, water motor gongs, shall be tested quarterly.

5.3.3.2* Vane-type and pressure switch–type waterflow devices shall be tested semiannually.

Copyright National Fire Protection Association
Provided by IHS under license with NFPA
No reproduction or networking permitted without license from IHS
Not for Resale

5.3.3.3 Testing the waterflow alarms on wet pipe systems shall be accomplished by opening the inspector's test connection.

5.3.3.3.1 Where freezing weather conditions or other circumstances prohibit use of the inspector's test connection, the bypass connection shall be permitted to be used.

5.3.3.4 Fire pumps shall not be turned off during testing unless all impairment procedures contained in Chapter 15 are followed.

5.3.3.5* Testing the waterflow alarm on dry pipe, preaction, or deluge systems shall be accomplished by using the bypass connection.

5.3.4* Antifreeze Systems. The freezing point of solutions in antifreeze shall be tested annually by measuring the specific gravity with a hydrometer or refractometer and adjusting the solutions if necessary.

5.3.4.1* Solutions shall be in accordance with Table 5.3.4.1(a) and Table 5.3.4.1(b).

5.3.4.2 The use of antifreeze solutions shall be in accordance with any state or local health regulations.

5.3.4.3 The antifreeze solution shall be tested at its most remote portion and where it interfaces with the wet-pipe system. When antifreeze systems have a capacity larger than 150 gal (568 L), tests at one additional point for every 100 gal (379 L) shall be made. If the test results indicate an incorrect freeze point at any point in the system, the system shall be drained, the solution adjusted, and the systems refilled. For premixed solutions, the manufacturer's instructions shall be permitted to be used with regard to the number of test points and refill procedure.

5.4 Maintenance.

5.4.1 Sprinklers.

5.4.1.1* Replacement sprinklers shall have the proper characteristics for the application intended. These shall include the following:

(1) Style
(2) Orifice size and *K*-factor
(3) Temperature rating
(4) Coating, if any
(5) Deflector type (e.g., upright, pendent, sidewall)
(6) Design requirements

5.4.1.1.1* Spray sprinklers shall be permitted to replace old-style sprinklers.

5.4.1.1.2 Replacement sprinklers for piers and wharves shall comply with NFPA 307, *Standard for the Construction and Fire Protection of Marine Terminals, Piers, and Wharves.*

Table 5.3.4.1(a) Antifreeze Solutions To Be Used If Nonpotable Water Is Connected to Sprinklers

Material	Solution (by volume)	Specific Gravity at 60°F (15.6°C)	Freezing Point °F	Freezing Point °C
Glycerine*				
Diethylene glycol	50% water	1.078	–25.0	–13
	45% water	1.081	–32.8	–27
	40% water	1.086	–41.1	–42
	Hydrometer scale 1.000 to 1.120 (subdivisions 0.002)			
Ethylene glycol	61% water	1.056	–23.3	–10
	56% water	1.063	–28.9	–20
	51% water	1.069	–34.4	–30
	47% water	1.073	–40.0	–40
	Hydrometer scale 1.000 to 1.120 (subdivisions 0.002)			
Propylene glycol*				
Calcium chloride 80% "flake"	lb $CaCl_2$/gal of water			
Fire protection grade**				
Add corrosion inhibitor of sodium bichromate ¾ oz/gal water	2.83	1.183	–17.8	0
	3.38	1.212	–23.3	–10
	3.89	1.237	–28.9	–20
	4.37	1.258	–34.4	–30
	4.73	1.274	–40.0	–40
	4.93	1.283	–45.6	–50

*If used, see Table 5.3.4.1(b).
**Free from magnesium chloride and other impurities.

Copyright National Fire Protection Association
Provided by IHS under license with NFPA
No reproduction or networking permitted without license from IHS
Not for Resale

Table 5.3.4.1(b) Antifreeze Solutions To Be Used If Potable Water Is Connected to Sprinklers

Material	Solution (by volume)	Specific Gravity at 60°F (15.6°C)	Freezing Point °F	Freezing Point °C
Glycerine C.P. or U.S.P. grade*	50% water	1.145	–29.4	–20.9
	40% water	1.171	–44.1	–47.3
	30% water	1.197	–30.1	–22.2
	Hydrometer scale 1.000 to 1.200			
Propylene glycol	70% water	1.027	–12.8	+9
	60% water	1.034	–21.2	–6
	50% water	1.041	–32.2	–26
	40% water	1.045	–51.1	–60
	Hydrometer scale 1.000 to 1.200 (subdivisions 0.0002)			

*C.P. = Chemically pure; U.S.P. = United States Pharmacopoeia 96.9%.

5.4.1.2 Only new, listed sprinklers shall be used to replace existing sprinklers.

5.4.1.3* Special and quick-response sprinklers as defined by NFPA 13, *Standard for the Installation of Sprinkler Systems*, shall be replaced with sprinklers of the same orifice, size, temperature range and thermal response characteristics, and *K*-factor.

5.4.1.4* A supply of spare sprinklers (never fewer than six) shall be maintained on the premises so that any sprinklers that have operated or been damaged in any way can be promptly replaced.

5.4.1.4.1 The sprinklers shall correspond to the types and temperature ratings of the sprinklers in the property.

5.4.1.4.2 The sprinklers shall be kept in a cabinet located where the temperature in which they are subjected will at no time exceed 100°F (38°C).

5.4.1.4.2.1 Where dry sprinklers of different lengths are installed, spare dry sprinklers shall not be required, provided that a means of returning the system to service is furnished.

5.4.1.5 The stock of spare sprinklers shall include all types and ratings installed and shall be as follows:

(1) For protected facilities having under 300 sprinklers — no fewer than 6 sprinklers
(2) For protected facilities having 300 to 1000 sprinklers — no fewer than 12 sprinklers
(3) For protected facilities having over 1000 sprinklers — no fewer than 24 sprinklers

5.4.1.6* A special sprinkler wrench shall be provided and kept in the cabinet to be used in the removal and installation of sprinklers. One sprinkler wrench shall be provided for each type of sprinkler installed.

5.4.1.7 Sprinklers protecting spray coating areas shall be protected against overspray residue.

5.4.1.7.1 Sprinklers subject to overspray accumulations shall be protected using plastic bags having a maximum thickness of 0.003 in. (0.076 mm) or shall be protected with small paper bags.

5.4.1.7.2 Coverings shall be replaced when deposits or residue accumulate.

5.4.1.8* Sprinklers shall not be altered in any respect or have any type of ornamentation, paint, or coatings applied after shipment from the place of manufacture.

5.4.1.9 Sprinklers and automatic spray nozzles used for protecting commercial-type cooking equipment and ventilating systems shall be replaced annually.

5.4.1.9.1 Where automatic bulb-type sprinklers or spray nozzles are used and annual examination shows no buildup of grease or other material on the sprinklers or spray nozzles, such sprinklers and spray nozzles shall not be required to be replaced.

5.4.2* Dry Pipe Systems. Dry pipe systems shall be kept dry at all times.

5.4.2.1 During nonfreezing weather, a dry pipe system shall be permitted to be left wet if the only other option is to remove the system from service while waiting for parts or during repair activities.

5.4.2.2 Air driers shall be maintained in accordance with the manufacturer's instructions.

5.4.2.3 Compressors used in conjunction with dry pipe sprinkler systems shall be maintained in accordance with the manufacturer's instructions.

5.4.3* Installation and Acceptance Testing. Where maintenance or repair requires the replacement of sprinkler system components affecting more than 20 sprinklers, those components shall be installed and tested in accordance with NFPA 13, *Standard for the Installation of Sprinkler Systems.*

5.4.4* Marine Systems. Sprinkler systems that are normally maintained using fresh water as a source shall be drained and refilled, then drained and refilled again with fresh water following the introduction of raw water into the system.

5.5 Component Action Requirements.

5.5.1 Whenever a component in a sprinkler system is adjusted, repaired, reconditioned, or replaced, the actions required in Table 5.5.1 shall be performed.

5.5.1.1 Where the original installation standard is different from the cited standard, the use of the appropriate installing standard shall be permitted.

--`,,```,,,,````-`-`,,`,,`,`,,`---

Copyright National Fire Protection Association
Provided by IHS under license with NFPA
No reproduction or networking permitted without license from IHS
Not for Resale

Table 5.5.1 Summary of Component Replacement Action Requirements

Component	Adjust	Repair/ Recondition	Replace	Required Action
Water Delivery Components				
Pipe and fittings affecting less than 20 sprinklers	X	X	X	Check for leaks at system working pressure
Pipe and fittings affecting more than 20 sprinklers	X	X	X	Hydrostatic test in conformance with NFPA 13, *Standard for the Installation of Sprinkler Systems*
Sprinklers, less than 20	X		X	Check for leaks at system working pressure
Sprinklers, more than 20	X		X	Hydrostatic test in conformance with NFPA 13
Fire department connections	X	X	X	See Chapter 13
Antifreeze solution	X		X	Check freezing point of solution Check for leaks at system working pressure
Valves				See Chapter 13
Fire pump				See Chapter 8
Alarm and Supervisory Components				
Vane-type waterflow	X	X	X	Operational test using inspector's test connection
Pressure switch–type waterflow	X	X	X	Operational test using inspector's test connection
Water motor gong	X	X	X	Operational test using inspector's test connection
High and low air pressure switch	X	X	X	Operational test of high and low settings
Valve supervisory device	X	X	X	Test for conformance with NFPA 13 and/or *NFPA 72, National Fire Alarm Code*
Detection system (for deluge or preaction system)	X	X	X	Operational test for conformance with NFPA 13 and/or *NFPA 72*
Status-Indicating Components				
Gauges			X	Verify at 0 bar (0 psi) and system working pressure
Testing and Maintenance Components				
Air compressor	X	X	X	Operational test for conformance with NFPA 13
Automatic air maintenance device	X	X	X	Operational test for conformance with NFPA 13
Main drain	X	X	X	Main drain test
Auxiliary drains	X	X	X	Check for leaks at system working pressure Main drain test
Inspector's test connection	X	X	X	Check for leaks at system working pressure Main drain test

--`,,```,,,,````-`-`,,`,,`,`,,`---

Copyright National Fire Protection Association
Provided by IHS under license with NFPA
No reproduction or networking permitted without license from IHS
Not for Resale

5.5.1.2 A main drain test shall be required if the system control or other upstream valve was operated in accordance with 13.3.3.4.

5.5.1.3 These actions shall not require a design review, which is outside the scope of this standard.

Chapter 6 Standpipe and Hose Systems

6.1 General. This chapter shall provide the minimum requirements for the routine inspection, testing, and maintenance of standpipe and hose systems. Table 6.1 shall be used to determine the minimum required frequencies for inspection, testing, and maintenance.

6.1.1 Valves and Connections. Valves and fire department connections shall be inspected, tested, and maintained in accordance with Chapter 13.

6.1.2 Impairments. Where the inspection, testing, and maintenance of standpipe and hose systems results or involves a system that is out of service, the procedures outlined in Chapter 15 shall be followed.

6.2 Inspection.

6.2.1 Components of standpipe and hose systems shall be visually inspected annually or as specified in Table 6.1.

6.2.2 Table 6.2.2 shall be used for the inspection, testing, and maintenance of all classes of standpipe and hose systems.

6.2.3 Checkpoints and corrective actions outlined in Table 6.2.2 shall be followed to determine that components are free of corrosion, foreign material, physical damage, tampering, or other conditions that adversely affect system operation.

6.3 Testing. Where water damage is a possibility, an air test shall be conducted on the system at 25 psi (1.7 bar) prior to introducing water to the system.

6.3.1 Flow Tests.

6.3.1.1* A flow test shall be conducted every 5 years at the hydraulically most remote hose connections of each zone of an automatic standpipe system to verify the water supply still provides the design pressure at the required flow.

6.3.1.2 Where a flow test of the hydraulically most remote outlet(s) is not practical, the authority having jurisdiction shall be consulted for the appropriate location for the test.

6.3.1.3 All systems shall be flow tested and pressure tested at the requirements for the design criteria in effect at the time of the installation.

6.3.1.3.1 The actual test method(s) and performance criteria shall be discussed in advance with the authority having jurisdiction.

Table 6.1 Summary of Standpipe and Hose Systems Inspection, Testing, and Maintenance

Item	Frequency	Reference
Inspection		
Control valves	Weekly/monthly	Table 13.1
Pressure regulating devices	Quarterly	Table 13.1
Piping	Annually	6.2.1
Hose connections	Annually	Table 13.1
Cabinet	Annually	NFPA 1962, *Standard for the Inspection, Care, and Use of Fire Hose, Couplings, and Nozzles and the Service Testing of Fire Hose*
Hose	Annually	NFPA 1962
Hose storage device	Annually	NFPA 1962
Hose nozzle	Annually and after each use	NFPA 1962
Test		
Waterflow devices	Quarterly/semiannually	Table 13.1
Valve supervisory devices	Semiannually	Table 13.1
Supervisory signal devices (except valve supervisory switches)	Semiannually	Table 13.1
Hose storage device	Annually	NFPA 1962
Hose	5 years/3 years	NFPA 1962
Pressure control valve	5 years	Table 13.1
Pressure reducing valve	5 years	Table 13.1
Hydrostatic test	5 years	6.3.2
Flow test	5 years	6.3.1
Main drain test	Annually	Table 13.1
Maintenance		
Hose connections	Annually	Table 6.2.2
Valves (all types)	Annually/as needed	Table 13.1

Copyright National Fire Protection Association
Provided by IHS under license with NFPA
No reproduction or networking permitted without license from IHS
Not for Resale

Table 6.2.2 Standpipe and Hose Systems

Component/Checkpoint	Corrective Action
Hose Connections	
Cap missing	Replace
Fire hose connection damaged	Repair
Valve handles missing	Replace
Cap gaskets missing or deteriorated	Replace
Valve leaking	Close or repair
Visible obstructions	Remove
Restricting device missing	Replace
Manual, semiautomatic, or dry standpipe — valve does not operate smoothly	Lubricate or repair
Piping	
Damaged piping	Repair
Control valves damaged	Repair or replace
Missing or damaged pipe support device	Repair or replace
Damaged supervisory devices	Repair or replace
Hose	
Inspect	Remove and inspect the hose, including gaskets, and rerack or rereel at intervals in accordance with NFPA 1962, *Standard for the Care, Use, and Service Testing of Fire Hose Including Couplings and Nozzles*
Mildew, cuts, abrasions, and deterioration evident	Replace with listed lined, jacketed hose
Coupling damaged	Replace or repair
Gaskets missing or deteriorated	Replace
Incompatible threads on coupling	Replace or provide thread adapter
Hose not connected to hose rack nipple or valve	Connect
Hose test outdated	Retest or replace in accordance with NFPA 1962
Hose Nozzle	
Hose nozzle missing	Replace with listed nozzle
Gasket missing or deteriorated	Replace
Obstructions	Remove
Nozzle does not operate smoothly	Repair or replace
Hose Storage Device	
Difficult to operate	Repair or replace
Damaged	Repair or replace
Obstruction	Remove
Hose improperly racked or rolled	Remove
Nozzle clip in place and nozzle correctly contained?	Replace if necessary
If enclosed in cabinet, will hose rack swing out at least 90 degrees?	Repair or remove any obstructions
Cabinet	
Check overall condition for corroded or damaged parts	Repair or replace parts; replace entire cabinet if necessary
Difficult to open	Repair
Cabinet door will not open fully	Repair or move obstructions
Door glazing cracked or broken	Replace
If cabinet is break-glass type, is lock functioning properly?	Repair or replace
Glass break device missing or not attached	Replace or attach
Not properly identified as containing fire equipment	Provide identification
Visible obstructions	Remove
All valves, hose, nozzles, fire extinguisher, etc., easily accessible	Remove any material not related

--`,,```,,,,````-`-`,,`,,`,`,,`---

Copyright National Fire Protection Association
Provided by IHS under license with NFPA
No reproduction or networking permitted without license from IHS
Not for Resale

6.3.1.4 Standpipes, sprinkler connections to standpipes, or hose stations equipped with pressure reducing valves or pressure regulating valves shall have these valves inspected, tested, and maintained in accordance with the requirements of Chapter 13.

6.3.1.5 A main drain test shall be performed on all standpipe systems with automatic water supplies in accordance with the requirements of Chapter 13.

6.3.1.5.1 The test shall be performed at the low point drain for each standpipe or the main drain test connection where the supply main enters the building (when provided).

6.3.1.5.2 Pressure gauges shall be provided for the test and shall be maintained in accordance with 5.3.2.

6.3.2 Hydrostatic Tests.

6.3.2.1 Hydrostatic tests of not less than 200 psi (13.8 bar) pressure for 2 hours, or at 50 psi (3.4 bar) in excess of the maximum pressure, where maximum pressure is in excess of 150 psi (10.3 bar), shall be conducted every 5 years on manual standpipe systems and automatic-dry standpipe systems, including piping in the fire department connection.

6.3.2.2* Hydrostatic tests shall be conducted in accordance with 6.3.2.1 on any system that has been modified or repaired.

6.3.2.2.1 Manual wet standpipes that are part of a combined sprinkler/standpipe system shall not be required to be tested in accordance with 6.3.2.1.

6.3.2.3 The hydrostatic test pressure shall be measured at the low elevation point of the individual system or zone being tested. The inside standpipe piping shall show no leakage.

6.3.3 Alarm Devices. Where provided, waterflow alarm and supervisory devices shall be tested in accordance with 13.2.6 and 13.3.3.5.

6.3.3.1 Where freezing conditions necessitate a delay in testing, tests shall be performed as soon as weather allows.

6.4 Maintenance. Maintenance and repairs shall be in accordance with 6.2.3 and Table 6.2.2.

6.4.1 Equipment that does not pass the inspection or testing requirements shall be repaired and tested again or replaced.

6.5 Component Action Requirements.

6.5.1 Whenever a component in a standpipe and hose system is adjusted, repaired, reconditioned or replaced, the action required in Table 6.5.1, Summary of Component Replacement Action Requirements, shall be performed.

Table 6.5.1 Summary of Component Replacement Action Requirements

Component	Adjust	Repair	Replace	Required Action
Water Delivery Components				
Control valves	X	X	X	See Chapter 13
Hose valve pressure regulating devices	X	X	X	See Chapter 13
System pressure regulating devices	X	X	X	See Chapter 13
Piping	X	X	X	Hydrostatic test in conformance with NFPA 14, *Standard for the Installation of Standpipe and Hose Systems*
Fire hose			X	
Hose valve	X	X	X	See Chapter 13
Fire department connections	X	X	X	See Chapter 13
Backflow prevention device	X	X	X	See Chapter 13
Valves				See Chapter 13
Fire pump				See Chapter 8
Alarm and Supervisory Components				
Vane-type waterflow	X	X		Operational test using inspector's test connection
Vane-type waterflow			X	Operational test using inspector's test connection
Pressure switch–type waterflow	X	X	X	Operational test using inspector's test connection
Water motor gong	X	X	X	Operational test using inspector's test connection
Valve supervisory device	X	X	X	Operational test for receipt of alarms and verification of conformance with NFPA 14 and/or *NFPA 72, National Fire Alarm Code*
Status-Indicating Components				
Gauges			X	Verify at 0 psi and system working pressure
System Housing and Protection Components				
Cabinet	X	X	X	Verify compliance with NFPA 14
Hose storage rack	X	X	X	Verify compliance with NFPA 14
Testing and Maintenance Components				
Drain riser	X	X	X	Check for leaks while flowing from connection above the repair
Auxiliary drains	X	X	X	Check for leaks at system working pressure
Main drain	X	X	X	Check for leaks and residual pressure during main drain test
Structural Components				
Hanger/seismic bracing	X	X	X	Verify conformance with NFPA 14
Pipe stands	X	X	X	Verify conformance with NFPA 14
Informational Components				
Identification signs	X	X	X	Verify conformance with NFPA 14
Hydraulic placards	X	X	X	Verify conformance with NFPA 14

Copyright National Fire Protection Association
Provided by IHS under license with NFPA
No reproduction or networking permitted without license from IHS
Not for Resale

6.5.1.1 Where the original installation standard is different from the cited standard, the use of the appropriate installing standard shall be permitted.

6.5.1.2 A main drain test shall be required if the control valve or other upstream valve was operated in accordance with 13.3.3.4.

6.5.1.3 These actions shall not require a design review, which is outside the scope of this standard.

Chapter 7 Private Fire Service Mains

7.1 General. This chapter shall provide the minimum requirements for the routine inspection, testing, and maintenance of private fire service mains and their appurtenances. Table 7.1 shall be used to determine the minimum required frequencies for inspection, testing, and maintenance.

7.1.1 Valves and Connections. Valves and fire department connections shall be inspected, tested, and maintained in accordance with Chapter 13.

7.1.2 Fire Hose. Fire hose shall be maintained in accordance with NFPA 1962, *Standard for the Inspection, Care, and Use of Fire Hose, Couplings, and Nozzles and the Service Testing of Fire Hose.*

7.1.3 Impairments. The procedures outlined in Chapter 15 shall be followed wherever such an impairment to protection occurs.

7.1.4 Notification to Supervisory Service. To avoid false alarms where a supervisory service is provided, the alarm receiving facilities always shall be notified by the property owner or designated representative as follows:

(1) Before conducting any test or procedure that could result in the activation of an alarm
(2) After such tests or procedures are concluded

7.2 Inspection.

7.2.1 General. Private fire service mains and their appurtenances shall be inspected at the intervals specified in Table 7.1.

7.2.2* Procedures. All procedures shall be carried out in accordance with the manufacturer's instructions, where applicable.

7.2.2.1 Exposed Piping.

7.2.2.1.1 Exposed piping shall be inspected annually.

7.2.2.1.2 Piping shall be inspected, and the necessary corrective action shall be taken as shown in Table 7.2.2.1.2.

Table 7.2.2.1.2 Exposed Piping

Condition	Corrective Action
Leaks	Repair
Physical damage	Repair or replace
Corrosion	Clean or replace and coat with corrosion protection
Restraint methods	Repair or replace

7.2.2.1.3 Piping installed in areas that are inaccessible for safety considerations due to process operations shall be inspected during each scheduled shutdown.

7.2.2.2 Underground Piping. Generally, underground piping cannot be inspected on a routine basis. However, flow testing can reveal the condition of underground piping and shall be conducted in accordance with Section 7.3.

Table 7.1 Summary of Private Fire Service Main Inspection, Testing, and Maintenance

Item	Frequency	Reference
Inspection		
Hose houses	Quarterly	7.2.2.7
Hydrants (dry barrel and wall)	Annually and after each operation	7.2.2.4
Monitor nozzles	Semiannually	7.2.2.6
Hydrants (wet barrel)	Annually and after each operation	7.2.2.5
Mainline strainers	Annually and after each significant flow	7.2.2.3
Piping (exposed)	Annually	7.2.2.1
Piping (underground)	See 7.2.2.2	7.2.2.2
Test		
Monitor nozzles	Flow, annually (range and operation)	7.3.3
Hydrants	Flow, annually	7.3.2
Piping (exposed and underground) (flow test)	5 years	7.3.1
Maintenance		
Mainline strainers	Annually and after each operation	7.2.2.3
Hose houses	Annually	7.2.2.7
Hydrants	Annually	7.4.2
Monitor nozzles	Annually	7.4.3

Copyright National Fire Protection Association
Provided by IHS under license with NFPA
No reproduction or networking permitted without license from IHS
Not for Resale

7.2.2.3* Mainline Strainers. Mainline strainers shall be inspected and cleaned after each system flow exceeding that of a nominal 2 in. (50 mm) orifice and shall be removed and inspected annually for failing, damaged, and corroded parts with the necessary corrective action taken as shown in Table 7.2.2.3.

7.2.2.4 Dry Barrel and Wall Hydrants. Dry barrel and wall hydrants shall be inspected annually and after each operation with the necessary corrective action taken as shown in Table 7.2.2.4.

7.2.2.5 Wet Barrel Hydrants. Wet barrel hydrants shall be inspected annually and after each operation with the necessary corrective action taken as shown in Table 7.2.2.5.

Table 7.2.2.3 Mainline Strainers

Condition	Corrective Action
Plugging or fouling	Clean
Corrosion	Replace or repair

Table 7.2.2.4 Dry Barrel and Wall Hydrants

Condition	Corrective Action
Inaccessible	Make accessible
Barrel contains water or ice (presence of water or ice could indicate a faulty drain, a leaky hydrant valve, or high groundwater table)	Repair and drain; for high groundwater it could be necessary to plug the drain and pump out the barrel after each use
Improper drainage from barrel	Repair drain
Leaks in outlets or at top of hydrant	Repair or replace gaskets, packing, or parts as necessary
Cracks in hydrant barrel	Repair or replace
Tightness of outlet caps	Lubricate if necessary; tighten if necessary
Worn outlet threads	Repair or replace
Worn hydrant operating nut	Repair or replace
Availability of operating wrench	Make sure wrench is available

Table 7.2.2.5 Wet Barrel Hydrants

Condition	Corrective Action
Inaccessible	Make accessible
Leaks in outlets or at top of hydrant	Repair or replace gaskets, packing, or parts as necessary
Cracks in hydrant barrel	Repair or replace
Tightness of outlet caps	Lubricate if necessary; tighten if necessary
Worn outlet threads	Repair or replace
Worn hydrant operating nut	Repair or replace
Availability of operating wrench	Make sure wrench is available

7.2.2.6 Monitor Nozzles. Monitor nozzles shall be inspected semiannually with the necessary corrective action taken as shown in Table 7.2.2.6.

7.2.2.7 Hose Houses. Hose houses shall be inspected quarterly with the necessary corrective action taken as shown in Table 7.2.2.7.

Table 7.2.2.6 Monitor Nozzles

Condition	Corrective Action
Leakage	Repair
Physical damage	Repair or replace
Corrosion	Clean or replace, and lubricate or protect as necessary

Table 7.2.2.7 Hose Houses

Condition	Corrective Action
Inaccessible	Make accessible
Physical damage	Repair or replace
Missing equipment	Replace equipment

7.3 Testing.

7.3.1* Underground and Exposed Piping Flow Tests. Underground and exposed piping shall be flow tested to determine the internal condition of the piping at minimum 5-year intervals.

7.3.1.1 Flow tests shall be made at flows representative of those expected during a fire, for the purpose of comparing the friction loss characteristics of the pipe with those expected for the particular type of pipe involved, with due consideration given to the age of the pipe and to the results of previous flow tests.

7.3.1.2 Any flow test results that indicate deterioration of available waterflow and pressure shall be investigated to the complete satisfaction of the authority having jurisdiction to ensure that the required flow and pressure are available for fire protection.

7.3.1.3 Where underground piping supplies individual fire sprinkler, standpipe, water spray, or foam-water sprinkler systems and there are no means to conduct full flow tests, tests generating the maximum available flows shall be permitted.

7.3.2 Hydrants. Hydrants shall be tested annually to ensure proper functioning.

7.3.2.1 Each hydrant shall be opened fully and water flowed until all foreign material has cleared.

7.3.2.2 Flow shall be maintained for not less than 1 minute.

7.3.2.3 After operation, dry barrel and wall hydrants shall be observed for proper drainage from the barrel.

7.3.2.4 Full drainage shall take no longer than 60 minutes.

7.3.2.5 Where soil conditions or other factors are such that the hydrant barrel does not drain within 60 minutes, or where the groundwater level is above that of the hydrant drain, the hydrant drain shall be plugged and the water in the barrel shall be pumped out.

Copyright National Fire Protection Association
Provided by IHS under license with NFPA
No reproduction or networking permitted without license from IHS
Not for Resale

7.3.2.6 Dry barrel hydrants that are located in areas subject to freezing weather and that have plugged drains shall be identified clearly as needing pumping after operation.

7.3.3 Monitor Nozzles.

7.3.3.1 Monitor nozzles that are mounted on hydrants shall be tested as specified in 7.3.2.

7.3.3.2 All monitor nozzles shall be oscillated and moved throughout their full range annually to ensure proper operability.

7.4 Maintenance.

7.4.1 General. All equipment shall be maintained in proper working condition, consistent with the manufacturer's recommendations.

7.4.2 Hydrants.

7.4.2.1 Hydrants shall be lubricated annually to ensure that all stems, caps, plugs, and threads are in proper operating condition.

7.4.2.2* Hydrants shall be kept free of snow, ice, or other materials and protected against mechanical damage so that free access is ensured.

7.4.3 Monitor Nozzles. Monitor nozzles shall be lubricated annually to ensure proper operating condition.

7.5 Component Action Requirements.

7.5.1 Whenever a component in a private fire service system is adjusted, repaired, reconditioned, or replaced, the action required in Table 7.5.1 shall be performed.

7.5.1.1 Where the original installation standard is different from the cited standard, the use of the appropriate installing standard shall be permitted.

7.5.1.2 A main drain test shall be required if the system control or other upstream valve was operated in accordance with 13.3.3.4.

7.5.1.3 These actions shall not require a design review, which is outside the scope of this standard.

Table 7.5.1 Summary of Component Replacement Action Requirements

Component	Adjust	Repair/ Recondition	Replace	Test Criteria
Water Delivery Components				
Pipe and fittings (exposed and underground)	X	X	X	Hydrostatic test in conformance with NFPA 24, *Standard for the Installation of Private Fire Service Mains and Their Appurtenances*
Hydrants	X	X	X	Hydrostatic test in conformance with NFPA 24 Water flow in conformance with NFPA 24 Check for proper drainage
Monitor nozzles	X	X	X	Hydrostatic test in conformance with NFPA 24 Flush in conformance with NFPA 24
Mainline strainers	X	X	X	Flow test downstream of strainer
Fire department connection	X	X	X	See Chapter 13
Valves				See Chapter 13
Fire pump				See Chapter 8
Alarm and Supervisory Components				
Valve supervisory device	X	X	X	Operational test for conformance with NFPA 24 and/or NFPA 72, *National Fire Alarm Code*
System-Indicating Components				
Gauges			X	Verify at 0 psi and system working pressure
System Housing and Protection Components				
Hose houses	X	X	X	Verify integrity of hose and hose house components
Structural Components				
Thrust blocks	X	X	X	Test at system working pressure
Tie rods	X	X	X	Test at system working pressure
Retainer glands	X	X	X	Test at system working pressure
Informational Components				
Identification signs	X	X	X	Verify conformance with NFPA 24

Copyright National Fire Protection Association
Provided by IHS under license with NFPA
No reproduction or networking permitted without license from IHS
Not for Resale

Chapter 8 Fire Pumps

8.1* General. This chapter shall provide the minimum requirements for the routine inspection, testing, and maintenance of fire pump assemblies. Table 8.1 shall be used to determine the minimum required frequencies for inspection, testing, and maintenance.

8.1.1 Valves and Connections. Valves and fire department connections shall be inspected, tested, and maintained in accordance with Chapter 13.

8.1.2* Auxiliary Equipment. The pump assembly auxiliary equipment shall include the following:

(1) Pump accessories as follows:
   (a) Pump shaft coupling
   (b) Automatic air release valve
   (c) Pressure gauges
   (d) Circulation relief valve (not used in conjunction with diesel engine drive with heat exchanger)
(2) Pump test device(s)
(3) Pump relief valve and piping (where maximum pump discharge pressure exceeds the rating of the system components or the driver is of variable speed)
(4) Alarm sensors and indicators
(5) Right-angle gear sets (for engine-driven vertical shaft turbine pumps)
(6) Pressure maintenance (jockey) pump and accessories

8.1.3 Water Supply to Pump Suction. The suction supply for the fire pump shall provide the required flow at a gauge pressure of zero (0) psi [zero (0) bar] or higher at the pump suction flange to meet the system demand.

8.1.3.1 Those installations for which NFPA 20, *Standard for the Installation of Stationary Pumps for Fire Protection*, permitted negative suction gauge pressures at the time of pump installation, where the system demand still can be met by the pump and water supply, shall be considered to be in compliance with 8.1.3.

8.1.4 Energy Source. The energy sources for the pump driver shall supply the necessary brake horsepower of the driver so that the pump meets system demand.

8.1.5 Driver. The pump driver shall not overload beyond its rating (including any service factor allowance) when delivering the necessary brake horsepower.

8.1.6* Controller. Automatic and manual controllers for applying the energy source to the driver shall be capable of providing this operation for the type of pump used.

8.1.7 Impairments. The procedures outlined in Chapter 15 shall be followed where an impairment to protection occurs.

8.1.8 Notification to Supervisory Service. To avoid false alarms where a supervisory service is provided, the alarm receiving facility always shall be notified by the property owner or designated representative as follows:

(1) Before conducting any test or procedure that could result in the activation of an alarm
(2) After such tests or procedures are concluded

8.2 Inspection.

8.2.1 The purpose of inspection shall be to verify that the pump assembly appears to be in operating condition and is free from physical damage.

8.2.2* The pertinent visual observations specified in the following checklists shall be performed weekly:

(1) Pump house conditions:
   (a) Heat is adequate, not less than 40°F (4.4°C) [70°F (21°C)] for pump room with diesel pumps without engine heaters.
   (b) Ventilating louvers are free to operate.
(2) Pump system conditions:
   (a) Pump suction and discharge and bypass valves are fully open.
   (b) Piping is free of leaks.
   (c) Suction line pressure gauge reading is within acceptable range.
   (d) System line pressure gauge reading is within acceptable range.

Table 8.1 Summary of Fire Pump Inspection, Testing, and Maintenance

Item	Frequency	Reference
Inspection		
Pump house, heating ventilating louvers	Weekly	8.2.2(1)
Fire pump system	Weekly	8.2.2(2)
Test		
Pump operation		
No-flow condition	Weekly	8.3.1
Flow condition	Annually	8.3.3.1
Maintenance		
Hydraulic	Annually	8.5
Mechanical transmission	Annually	8.5
Electrical system	Varies	8.5
Controller, various components	Varies	8.5
Motor	Annually	8.5
Diesel engine system, various components	Varies	8.5

Copyright National Fire Protection Association
Provided by IHS under license with NFPA
No reproduction or networking permitted without license from IHS
Not for Resale

(e) Suction reservoir is full.
(f) Wet pit suction screens are unobstructed and in place.

(3) Electrical system conditions:
(a) Controller pilot light (power on) is illuminated.
(b) Transfer switch normal pilot light is illuminated.
(c) Isolating switch is closed — standby (emergency) source.
(d) Reverse phase alarm pilot light is off, or normal phase rotation pilot light is on.
(e) Oil level in vertical motor sight glass is within acceptable range.

(4) Diesel engine system conditions:
(a) Fuel tank is two-thirds full.
(b) Controller selector switch is in auto position.
(c) Batteries' (2) voltage readings are within acceptable range.
(d) Batteries' (2) charging current readings are within acceptable range.
(e) Batteries' (2) pilot lights are on or battery failure (2) pilot lights are off.
(f) All alarm pilot lights are off.
(g) Engine running time meter is reading.
(h) Oil level in right angle gear drive is within acceptable range.
(i) Crankcase oil level is within acceptable range.
(j) Cooling water level is within acceptable range.
(k) Electrolyte level in batteries is within acceptable range.
(l) Battery terminals are free from corrosion.
(m) Water-jacket heater is operating.

(5)*Steam system conditions: Steam pressure gauge reading is within acceptable range.

8.3* Testing.

8.3.1 A weekly test of fire pump assemblies shall be conducted without flowing water.

8.3.1.1 The weekly test shall be conducted by starting the pump automatically.

8.3.1.2 The electric pump shall run a minimum of 10 minutes.

8.3.1.3 The diesel pump shall run a minimum of 30 minutes.

8.3.1.4 A valve installed to open as a safety feature shall be permitted to discharge water.

8.3.1.5 The automatic weekly test timer shall be permitted to be substituted for the starting procedure.

8.3.2 Weekly Tests.

8.3.2.1 Qualified operating personnel shall be in attendance during the weekly pump operation.

8.3.2.2* The pertinent visual observations or adjustments specified in the following checklists shall be conducted while the pump is running:

(1) Pump system procedure:
(a) Record the system suction and discharge pressure gauge readings.
(b) Check the pump packing glands for slight discharge.
(c) Adjust gland nuts if necessary.
(d) Check for unusual noise or vibration.
(e) Check packing boxes, bearings, or pump casing for overheating.
(f) Record the pump starting pressure.

(2) Electrical system procedure:
(a) Observe the time for motor to accelerate to full speed.
(b) Record the time controller is on first step (for reduced voltage or reduced current starting).
(c) Record the time pump runs after starting (for automatic stop controllers).

(3) Diesel engine system procedure:
(a) Observe the time for engine to crank.
(b) Observe the time for engine to reach running speed.
(c) Observe the engine oil pressure gauge, speed indicator, water, and oil temperature indicators periodically while engine is running.
(d) Record any abnormalities.
(e) Check the heat exchanger for cooling waterflow.

(4) Steam system procedure:
(a) Record the steam pressure gauge reading.
(b) Observe the time for turbine to reach running speed.

8.3.3 Annual Tests.

8.3.3.1* An annual test of each pump assembly shall be conducted under minimum, rated, and peak flows of the fire pump by controlling the quantity of water discharged through approved test devices.

8.3.3.1.1 If available suction supplies do not allow flowing of 150 percent of the rated pump capacity, the fire pump shall be permitted to operate at maximum allowable discharge.

8.3.3.1.2* The annual test shall be conducted as described in 8.3.3.1.2.1, 8.3.3.1.2.2, or 8.3.3.1.2.3.

8.3.3.1.2.1 Use of the Pump Discharge via the Hose Streams. Pump suction and discharge pressures and the flow measurements of each hose stream shall determine the total pump output. Care shall be taken to prevent water damage by verifying there is adequate drainage for the high-pressure water discharge from hoses.

8.3.3.1.2.2 Use of the Pump Discharge via the Bypass Flowmeter to Drain or Suction Reservoir. Pump suction and discharge pressures and the flowmeter measurements shall determine the total pump output.

8.3.3.1.2.3 Use of the Pump Discharge via the Bypass Flowmeter to Pump Suction (Closed-Loop Metering). Pump suction and discharge pressures and the flowmeter measurements shall determine the total pump output.

8.3.3.1.3 Where the annual test is conducted periodically in accordance with 8.3.3.1.2.3, a test shall be conducted every 3 years in accordance with 8.3.3.1.2.1 or 8.3.3.1.2.2 in lieu of the method described in 8.3.3.1.2.3.

8.3.3.1.4 Where 8.3.3.1.2.2 or 8.3.3.1.2.3 is used, the flow meter shall be adjusted immediately prior to conducting the test in accordance with the manufacturer's instructions. If the test results are not consistent with the previous annual test, 8.3.3.1.2.1 shall be used. If testing in accordance with 8.3.3.1.2.1 is not possible, a flowmeter calibration shall be performed and the test shall be repeated.

8.3.3.2 The pertinent visual observations, measurements, and adjustments specified in the following checklists shall be conducted annually while the pump is running and flowing water under the specified output condition:

Copyright National Fire Protection Association
Provided by IHS under license with NFPA
No reproduction or networking permitted without license from IHS
Not for Resale

(1) At no-flow condition (churn):
   (a) Check the circulation relief valve for operation to discharge water.
   (b) Check the pressure relief valve (if installed) for proper operation.
   (c) Continue the test for ½ hour.
(2) At each flow condition:
   (a) Record the electric motor voltage and current (all lines).
   (b) Record the pump speed in rpm.
   (c) Record the simultaneous (approximately) readings of pump suction and discharge pressures and pump discharge flow.

8.3.3.3* For installations having a pressure relief valve, the operation of the relief valve shall be closely observed during each flow condition to determine whether the pump discharge pressure exceeds the normal operating pressure of the system components.

8.3.3.3.1* The pressure relief valve shall also be observed during each flow condition to determine whether the pressure relief valve closes at the proper pressure.

8.3.3.3.2 The pressure relief valve shall be closed during flow conditions if necessary to achieve minimum rated characteristics for the pump, and reset to normal position at the conclusion of the pump test.

8.3.3.4 For installations having an automatic transfer switch, the following test shall be performed to ensure that the overcurrent protective devices (i.e., fuses or circuit breakers) do not open:

(1) Simulate a power failure condition while the pump is operating at peak load.
(2) Verify that the transfer switch transfers power to the alternate power source.
(3) Verify that the pump continues to perform at peak load.
(4) Remove the power failure condition, and verify that, after a time delay, the pump is reconnected to the normal power source.

8.3.3.5 Alarm conditions shall be simulated by activating alarm circuits at alarm sensor locations, and all such local or remote alarm indicating devices (visual and audible) shall be observed for operation.

8.3.3.6 Safety. Section 4.8 shall be followed for safety requirements while working near electric motor-driven fire pumps.

8.3.3.7* Suction Screens. After the waterflow portions of the annual test or fire protection system activations, the suction screens shall be inspected and cleared of any debris or obstructions.

8.3.3.8* Where engines utilize electronic fuel management control systems, the backup electronic control module (ECM), and the primary and redundant sensors for the ECM, shall be tested annually.

8.3.4 Other Tests.

8.3.4.1 Engine generator sets supplying emergency or standby power to fire pump assemblies shall be tested routinely in accordance with NFPA 110, *Standard for Emergency and Standby Power Systems.*

8.3.4.2 Automatic transfer switches shall be tested routinely and exercised in accordance with NFPA 110, *Standard for Emergency and Standby Power Systems.*

8.3.4.3 Tests of appropriate environmental pump room space conditions (e.g., heating, ventilation, illumination) shall be made to ensure proper manual or automatic operation of the associated equipment.

8.3.4.4* Parallel and angular alignment of the pump and driver shall be checked during the annual test. Any misalignment shall be corrected.

8.3.5 Test Results and Evaluation.

8.3.5.1* Interpretation.

8.3.5.1.1 The interpretation of the test results shall be the basis for determining performance of the pump assembly.

8.3.5.1.2 Qualified individuals shall interpret the test results.

8.3.5.2 Engine Speed.

8.3.5.2.1 Theoretical factors for correction to the rated speed shall be applied where determining the compliance of the pump per the test.

8.3.5.2.2 Increasing the engine speed beyond the rated speed of the pump at rated condition is not an acceptable method for meeting the rated pump performance.

8.3.5.3 The fire pump assembly shall be considered acceptable if either of the following conditions is shown during the test:

(1)*The test is no less than 95 percent of the pressure at rated flow and rated speed of the initial unadjusted field acceptance test curve, provided that the original acceptance test curve matches the original certified pump curve by using theoretical factors.
(2) The fire pump is no less than 95 percent of the performance characteristics as indicated on the pump nameplate.

8.3.5.4* Degradation in excess of 5 percent of the pressure of the initial unadjusted acceptance test curve or nameplate shall require an investigation to reveal the cause of degraded performance.

8.3.5.5 Current and voltage readings whose product does not exceed the product of the rated voltage and rated full-load current multiplied by the permitted motor service factor shall be considered acceptable.

8.3.5.6 Voltage readings at the motor within 5 percent below or 10 percent above the rated (i.e., nameplate) voltage shall be considered acceptable.

8.4 Reports.

8.4.1 Any abnormality observed during inspection or testing shall be reported promptly to the person responsible for correcting the abnormality.

8.4.2* Test results shall be recorded and retained for comparison purposes in accordance with Section 4.4.

8.4.2.1 All time delay intervals associated with the pump's starting, stopping, and energy source transfer shall be recorded.

8.5 Maintenance.

8.5.1* A preventive maintenance program shall be established on all components of the pump assembly in accordance with the manufacturer's recommendations.

Copyright National Fire Protection Association
Provided by IHS under license with NFPA
No reproduction or networking permitted without license from IHS
Not for Resale

8.5.2 Records shall be maintained on all work performed on the pump, driver, controller, and auxiliary equipment.

8.5.3 In the absence of manufacturer's recommendations for preventive maintenance, Table 8.5.3 shall be used for alternative requirements.

8.5.4 The preventive maintenance program shall be initiated immediately after the pump assembly has passed acceptance tests.

8.6 Component Replacement Testing Requirements.

8.6.1 Whenever a component in a fire pump is adjusted, repaired, rebuilt, or replaced, the tests required to restore the system to service shall be performed in accordance with Table 8.6.1.

8.6.2 NFPA 20, *Standard for the Installation of Stationary Pumps for Fire Protection*, shall be consulted for the minimum requirements for design and installation, including acceptance testing.

Table 8.5.3 Summary of Fire Pump Inspection, Testing, and Maintenance

Complete as Applicable	Visual Inspection	Check	Change	Clean	Test	Frequency
Pump System						
Lubricate pump bearings			X			Annually
Check pump shaft end play		X				Annually
Check accuracy of pressure gauges and sensors		X	X			Annually (change or recalibrate when 5% out of calibration)
Check pump coupling alignment		X				Annually
Wet pit suction screens		X		X		After each pump operation
Mechanical Transmission						
Lubricate coupling			X			Annually
Lubricate right-angle gear drive			X			Annually
Electrical System						
Exercise isolating switch and circuit breaker					X	Monthly
Trip circuit breaker (if mechanism provided)					X	Annually
Operate manual starting means (electrical)					X	Semiannually
Inspect and operate emergency manual starting means (without power)	X				X	Annually
Tighten electrical connections as necessary		X				Annually
Lubricate mechanical moving parts (excluding starters and relays)		X				Annually
Calibrate pressure switch settings		X				Annually
Grease motor bearings			X			Annually
Diesel Engine System						
Fuel						
Tank level	X	X				Weekly
Tank float switch	X				X	Weekly
Solenoid valve operation	X				X	Weekly
Strainer, filter, or dirt leg, or combination thereof				X		Quarterly
Water and foreign material in tank				X		Annually
Water in system		X		X		Weekly
Flexible hoses and connectors	X					Weekly
Tank vents and overflow piping unobstructed		X			X	Annually
Piping	X					Annually

Copyright National Fire Protection Association
Provided by IHS under license with NFPA
No reproduction or networking permitted without license from IHS
Not for Resale

Table 8.5.3 *Continued*

Complete as Applicable	Visual Inspection	Check	Change	Clean	Test	Frequency
Lubrication system						
Oil level	X	X				Weekly
Oil change			X			50 hours or annually
Oil filter(s)			X			50 hours or annually
Lube oil heater		X				Weekly
Crankcase breather	X		X	X		Quarterly
Cooling system						
Level	X	X				Weekly
Antifreeze protection level					X	Semiannually
Antifreeze		X				Annually
Adequate cooling water to heat exchanger		X				Weekly
Rod out heat exchanger				X		Annually
Water pump(s)	X					Weekly
Condition of flexible hoses and connections	X	X				Weekly
Jacket water heater		X				Weekly
Inspect duct work, clean louvers (combustion air)	X	X	X			Annually
Water strainer				X		Quarterly
Exhaust system						
Leakage	X	X				Weekly
Drain condensate trap		X				Weekly
Insulation and fire hazards	X					Quarterly
Excessive back pressure					X	Annually
Exhaust system hangers and supports	X					Annually
Flexible exhaust section	X					Semiannually
Battery system						
Electrolyte level		X				Weekly
Terminals clean and tight	X	X				Quarterly
Case exterior clean and dry	X	X				Monthly
Specific gravity or state of charge					X	Monthly
Charger and charge rate	X					Monthly
Equalize charge		X				Monthly
Clean terminals				X		Annually
Electrical system						
General inspection	X					Weekly
Tighten control and power wiring connections		X				Annually
Wire chafing where subject to movement	X	X				Quarterly
Operation of safeties and alarms		X			X	Semiannually
Boxes, panels, and cabinets				X		Semiannually
Circuit breakers or fuses	X	X				Monthly
Circuit breakers or fuses			X			Biennially

Copyright National Fire Protection Association
Provided by IHS under license with NFPA
No reproduction or networking permitted without license from IHS
Not for Resale

Table 8.6.1 Summary of Component Replacement Testing Requirements

Component	Adjust	Repair	Rebuild	Replace	Test Criteria
Fire Pump System					
Entire pump assembly				X	Perform acceptance test in accordance with NFPA 20, *Standard for the Installation of Stationary Pumps for Fire Protection*
Impeller/rotating assembly		X		X	Perform acceptance test in accordance with NFPA 20
Casing		X		X	Perform acceptance test in accordance with NFPA 20
Bearings				X	Perform annual test in accordance with NFPA 25
Sleeves				X	Perform annual test in accordance with NFPA 25
Wear rings				X	Perform annual test in accordance with NFPA 25
Main shaft		X		X	Perform annual test in accordance with NFPA 25
Packing	X			X	Perform weekly test in accordance with NFPA 25
Mechanical Transmission					
Gear right angle drives		X	X	X	Perform acceptance test in accordance with NFPA 20
Drive coupling	X	X	X	X	Perform weekly test in accordance with NFPA 25
Electrical System/Controller					
Entire controller		X	X	X	Perform acceptance test in accordance with NFPA 20
Isolating switch				X	Perform weekly test in accordance with NFPA 25 and exercise 6 times
Circuit breaker	X				Perform six momentary starts in accordance with NFPA 20
Circuit breaker				X	Perform a one-hour full-load current test
Electrical connections	X				Perform weekly test in accordance with NFPA 25
Main contactor			X		Perform weekly test in accordance with NFPA 25
Main contactor				X	Perform acceptance test in accordance with NFPA 20
Power monitor				X	Perform weekly test in accordance with NFPA 25
Start relay				X	Perform weekly test in accordance with NFPA 25
Pressure switch	X			X	Perform acceptance test in accordance with NFPA 20
Pressure transducer	X			X	Perform acceptance test in accordance with NFPA 20
Manual start or stop switch				X	Perform six operations under load
Transfer switch — load carrying parts		X	X	X	Perform a one-hour full-load current test, and transfer from normal power to emergency power and back one time
Transfer switch — non-load parts		X	X	X	Perform six no-load operations of transfer of power
Electric Motor Driver					
Electric motor		X	X	X	Perform acceptance test in accordance with NFPA 20
Motor bearings				X	Perform annual test in accordance with NFPA 25
Incoming power conductors				X	Perform a one-hour full-load current test
Diesel Engine Driver					
Entire engine			X	X	Perform annual test in accordance with NFPA 25
Fuel transfer pump	X		X	X	Perform weekly test in accordance with NFPA 25
Fuel injector pump	X			X	Perform weekly test in accordance with NFPA 25
Fuel system filter		X		X	Perform weekly test in accordance with NFPA 25
Combustion air intake system		X		X	Perform weekly test in accordance with NFPA 25
Fuel tank		X		X	Perform weekly test in accordance with NFPA 25
Cooling system		X	X	X	Perform weekly test in accordance with NFPA 25
Batteries		X		X	Perform a start/stop sequence in accordance with NFPA 25
Battery charger		X		X	Perform weekly test in accordance with NFPA 25
Electric system		X		X	Perform weekly test in accordance with NFPA 25
Lubrication filter/oil service		X		X	Perform weekly test in accordance with NFPA 25
Steam Turbines					
Steam turbine		X		X	Perform annual test in accordance with NFPA 20
Steam regulator or source upgrade		X		X	Perform annual test in accordance with NFPA 20

Copyright National Fire Protection Association
Provided by IHS under license with NFPA
No reproduction or networking permitted without license from IHS
Not for Resale

Table 8.6.1 *Continued*

Component	Adjust	Repair	Rebuild	Replace	Test Criteria
Positive Displacement Pumps					
Entire pump				X	Perform annual test in accordance with NFPA 20
Rotors				X	Perform annual test in accordance with NFPA 25
Plungers				X	Perform annual test in accordance with NFPA 25
Shaft				X	Perform annual test in accordance with NFPA 25
Driver		X	X	X	Perform annual test in accordance with NFPA 25
Bearings				X	Perform weekly test in accordance with NFPA 25
Seals				X	Perform weekly test in accordance with NFPA 25
Pump House and Miscellaneous Components					
Base plate		X		X	Perform weekly test in accordance with NFPA 25 with alignment check
Foundation		X	X	X	Perform weekly test in accordance with NFPA 25 with alignment check
Suction/discharge pipe		X		X	Perform visual inspection in accordance with NFPA 25
Suction/discharge fittings		X		X	Perform visual inspection in accordance with NFPA 25
Suction/discharge valves		X	X	X	Perform operational test in accordance with NFPA 25

Chapter 9 Water Storage Tanks

9.1* General. This chapter shall provide the minimum requirements for the routine inspection, testing, and maintenance of water storage tanks dedicated to fire protection use. Table 9.1 shall be used to determine the minimum required frequencies for inspection, testing, and maintenance.

9.1.1 Valves and Connections. Valves and fire department connections shall be inspected, tested, and maintained in accordance with Chapter 13.

9.1.2 Impairments. The procedures outlined in Chapter 15 shall be followed where an impairment to protection occurs.

9.1.3* Notification to Supervisory Service. To avoid false alarms where a supervisory service is provided, the alarm receiving facility always shall be notified by the property owner or designated representative as follows:

(1) Before conducting any test or procedure that could result in the activation of an alarm
(2) After such tests or procedures are concluded

9.2 Inspection.

9.2.1 Water Level.

9.2.1.1* Tanks equipped with supervised water level alarms that are connected to a constantly attended location shall be inspected quarterly.

9.2.1.2 Tanks not equipped with supervised water level alarms connected to a constantly attended location shall be inspected monthly.

9.2.2 Air Pressure.

9.2.2.1 Pressure tanks that have their air pressure source supervised in accordance with *NFPA 72, National Fire Alarm Code*, shall be inspected quarterly.

9.2.2.2 The air pressure in pressure tanks with a nonsupervised air pressure source shall be inspected monthly.

9.2.3 Heating System.

9.2.3.1 Tank heating systems installed on tanks equipped with a supervised low water temperature alarm that are connected to a constantly attended location shall be inspected weekly.

9.2.3.2 Tank heating systems without a supervised low temperature alarm connected to a constantly attended location shall be inspected daily during the heating season.

9.2.4 Water Temperature.

9.2.4.1 The temperature of water tanks shall not be less than 40°F (4.4°C).

9.2.4.2 The temperature of water in tanks with low temperature alarms connected to a constantly attended location shall be inspected and recorded monthly during the heating season when the mean temperature is less than 40°F (4.4°C).

9.2.4.3 The temperature of water in tanks without low temperature alarms connected to a constantly attended location shall be inspected and recorded weekly during the heating season when the mean temperature is less than 40°F (4.4°C).

9.2.5 Exterior Inspection.

9.2.5.1* The exterior of the tank, supporting structure, vents, foundation, and catwalks or ladders, where provided, shall be inspected quarterly for signs of obvious damage or weakening.

9.2.5.2 The area surrounding the tank and supporting structure, where provided, shall be inspected quarterly to ensure that the following conditions are met:

(1) The area is free of combustible storage, trash, debris, brush, or material that could present a fire exposure hazard.
(2) The area is free of the accumulation of material on or near parts that could result in accelerated corrosion or rot.
(3) The tank and support are free of ice buildup.
(4) The exterior sides and top of embankments supporting coated fabric tanks are free of erosion.

Copyright National Fire Protection Association
Provided by IHS under license with NFPA
No reproduction or networking permitted without license from IHS
Not for Resale

Table 9.1 Summary of Water Storage Tank Inspection, Testing, and Maintenance

Item	Frequency	Reference
Inspection		
Condition of water in tank	Monthly/quarterly*	9.2.1
Water temperature	Daily/weekly*	9.2.4
Heating system	Daily/weekly*	9.2.6.6
Control valves	Weekly/monthly	Table 13.1
Water — level	Monthly/quarterly	9.2.1
Air pressure	Monthly/quarterly	9.2.2
Tank — exterior	Quarterly	9.2.5.1
Support structure	Quarterly	9.2.5.1
Catwalks and ladders	Quarterly	9.2.5.1
Surrounding area	Quarterly	9.2.5.2
Hoops and grillage	Annually	9.2.5.4
Painted/coated surfaces	Annually	9.2.5.5
Expansion joints	Annually	9.2.5.3
Interior	5 years/3 years	9.2.6
Check valves	5 years	Table 13.1
Test		
Temperature alarms	Quarterly*	9.2.4.2, 9.2.4.3
High temperature limit switches	Monthly*	9.3.4
Water level alarms	Semiannually	9.3.5
Level indicators	5 years	9.3.1
Pressure gauges	5 years	9.3.6
Maintenance		
Water level	—	9.4.1
Drain silt	Semiannually	9.4.5
Control valves	Annually	Table 13.1
Embankment-supported coated fabric (ESCF)	—	9.4.6
Check valves	—	13.4.2.2

*Cold weather/heating season only.

9.2.5.3 Expansion joints, where provided, shall be inspected annually for leaks and cracks.

9.2.5.4 The hoops and grillage of wooden tanks shall be inspected annually.

9.2.5.5 Exterior painted, coated, or insulated surfaces of the tank and supporting structure, where provided, shall be inspected annually for signs of degradation.

9.2.6 Interior Inspection.

9.2.6.1 Frequency.

9.2.6.1.1* The interior of steel tanks without corrosion protection shall be inspected every 3 years.

9.2.6.1.2 The interior of all other types of tanks shall be inspected every 5 years.

9.2.6.2 Where interior inspection is made by means of underwater evaluation, silt shall first be removed from the tank floor.

9.2.6.3 The tank interior shall be inspected for signs of pitting, corrosion, spalling, rot, other forms of deterioration, waste materials and debris, aquatic growth, and local or general failure of interior coating.

9.2.6.4 Steel tanks exhibiting signs of interior pitting, corrosion, or failure of coating shall be tested in accordance with 9.2.7.

9.2.6.5* Tanks on ring-type foundations with sand in the middle shall be inspected for evidence of voids beneath the floor.

9.2.6.6 The heating system and components including piping shall be inspected.

9.2.6.7 The anti-vortex plate shall be inspected for deterioration or blockage.

9.2.7 Interior Inspection. Where a drained interior inspection of a steel tank is conducted in accordance with 9.2.6.4, the following tests shall be conducted:

(1) Evaluation of tank coatings shall be made in accordance with the adhesion test of ASTM D 3359, *Standard Test Methods for Measuring Adhesion by Tape Test*, generally referred to as the "cross-hatch test."

Copyright National Fire Protection Association
Provided by IHS under license with NFPA
No reproduction or networking permitted without license from IHS
Not for Resale

(2) Dry film thickness measurements shall be taken at random locations to determine the overall coating thickness.
(3) Nondestructive ultrasonic readings shall be taken to evaluate the wall thickness where there is evidence of pitting or corrosion.
(4) Interior surfaces shall be spot wet-sponge tested to detect pinholes, cracks, or other compromises in the coating. Special attention shall be given to sharp edges such as ladder rungs, nuts, and bolts.
(5) Tank bottoms shall be tested for metal loss and/or rust on the underside by use of ultrasonic testing where there is evidence of pitting or corrosion. Removal, visual inspection, and replacement of random floor coupons shall be an acceptable alternative to ultrasonic testing.
(6) Tanks with flat bottoms shall be vacuum-box tested at bottom seams in accordance with test procedures found in NFPA 22, *Standard for Water Tanks for Private Fire Protection.*

9.3 Testing.

9.3.1* Level indicators shall be tested every 5 years for accuracy and freedom of movement.

9.3.2 The tank heating system, where provided, shall be tested prior to the heating season to make certain it is in the proper working order.

9.3.3 Low water temperature alarms, where provided, shall be tested monthly (cold weather only).

9.3.4* High water temperature limit switches on tank heating systems, where provided, shall be tested monthly whenever the heating system is in service.

9.3.5* High and low water level alarms shall be tested semiannually.

9.3.6 Pressure gauges shall be tested every 5 years with a calibrated gauge in accordance with the manufacturer's instructions. Gauges not accurate to within 3 percent of the scale of the gauge being tested shall be recalibrated or replaced.

9.4 Maintenance.

9.4.1 Voids discovered beneath the floors of tanks shall be filled by pumping in grout or accessing the sand and replenishing.

9.4.2 The tank shall be maintained full or at the designed water level.

9.4.3 The hatch covers in the roofs and the door at the top of the frostproof casing shall always be kept securely fastened with substantial catches as a protection against freezing and windstorm damage.

9.4.4 No waste materials, such as boards, paint cans, trim, or loose material, shall be left in the tank or on the surface of the tank.

9.4.5 Silt shall be removed during interior inspections or more frequently as needed to avoid accumulation to the level of the tank outlet.

9.4.6 Maintenance of Embankment-Supported Coated Fabric (ESCF) Suction Tanks.

9.4.6.1 The maintenance of ESCF tanks shall be completed in accordance with this section and the tank manufacturer's instructions.

9.4.6.2 The exposed surfaces of embankment-supported coated fabric (ESCF) tanks shall be cleaned and painted every 2 years or in accordance with the manufacturer's instructions.

9.5 Automatic Tank Fill Valves.

9.5.1 Inspection.

9.5.1.1 Automatic tank fill valves shall be inspected weekly to ensure that the OS&Y isolation valves are in the normal open position in accordance with Table 9.5.1.1.

Table 9.5.1.1 Summary of Automatic Tank Fill Valve Inspection and Testing

Item	Frequency	Reference
Inspection		
Strainers, filters, orifices (inspect /clean)	Quarterly	13.4.1.2
Enclosure (during cold weather)	Daily/weekly	13.4.3.1.1
Exterior	Monthly	13.4.3.1.6
Interior	Annually/5 years	13.4.3.1.7
Test		
Automatic tank fill valve	Annually	

9.5.1.2 Valves secured with locks or electrically supervised in accordance with applicable NFPA standards shall be inspected monthly.

9.5.1.3 The enclosure shall be inspected to verify that it is heated and secured.

9.5.2 Maintenance.

9.5.2.1 Maintenance of all automatic tank fill valves shall be conducted by a qualified person following the manufacturer's instructions in accordance with the procedure and policies of the authority having jurisdiction.

9.5.2.2 Rubber parts shall be replaced in accordance with the frequency required by the authority having jurisdiction and the manufacturer's instructions.

9.5.2.3 Strainers shall be cleaned quarterly.

9.5.3 Testing. All automatic tank fill valves shall be tested yearly in accordance with the following:

(1) The valve shall be actuated automatically by lowering the water level in the tank.
(2) The refill rate shall be measured and recorded.

9.6 Component Action Requirements.

9.6.1 Whenever a component in a water storage tank is adjusted, repaired, reconditioned, or replaced, the action required in Table 9.6.1, Summary of Component Replacement Action Requirements, shall be performed.

9.6.1.1 Where the original installation standard is different from the cited standard, the use of the appropriate installing standard shall be permitted.

9.6.1.2 A main drain test shall be required if the system control or other upstream valve was operated in accordance with 13.3.3.4.

9.6.1.3 These actions shall not require a design review, which is outside the scope of this standard.

--`,,```,,,,````-`-`,,`,,`,`,,`---
Copyright National Fire Protection Association
Provided by IHS under license with NFPA
No reproduction or networking permitted without license from IHS
Not for Resale

Table 9.6.1 Summary of Component Replacement Action Requirements

Component	Adjust	Repair/ Recondition	Replace	Test Criteria
Tank Components				
Tank interior		X	X	Remove debris Verify integrity in conformance with NFPA, *Standard for Water Tanks for Private Fire Protection*
Tank exterior		X	X	Verify integrity in conformance with NFPA 22
Support structure		X	X	Verify integrity in conformance with NFPA 22
Heating system	X	X	X	Verify heating system is in conformance with NFPA 22
Catwalks and ladders	X	X	X	Verify integrity in conformance with NFPA 22
Hoops and grillage	X	X	X	Verify integrity in conformance with NFPA 22
Expansion joints	X	X	X	Verify integrity in conformance with NFPA 22
Overflow piping	X	X	X	Verify integrity in conformance with NFPA 22
Insulation		X	X	Verify integrity in conformance with NFPA 22
Valves				See Chapter 13
Alarm and Supervisory Components				
High and low water level	X	X	X	Operational test for conformance with NFPA 22 and/or NFPA 72, *National Fire Alarm Code,* and the design water levels
Water temperature	X	X	X	Operational test for conformance with NFPA 22 and/or NFPA 72
Enclosure temperature	X	X	X	Operational test for conformance with NFPA 22 and/or NFPA 72
Valve supervision	X	X	X	Operational test for conformance with NFPA 22, and/or NFPA 72
Fill and Discharge Components				
Automatic fill valves				See Chapter 13
Valves	X	X	X	See Chapter 13
Status Indicators				
Level indicators	X	X	X	Verify conformance with NFPA 22
Pressure gauges			X	Verify at 0 psi (0 bar) and at system working pressure

Chapter 10 Water Spray Fixed Systems

10.1* General. This chapter shall provide the minimum requirements for the routine inspection, testing, and maintenance of water spray protection from fixed nozzle systems only. Table 10.1 shall be used to determine the minimum required frequencies for inspection, testing, and maintenance.

10.1.1 This chapter shall not cover water spray protection from portable nozzles, sprinkler systems, monitor nozzles, or other means of application.

10.1.2* NFPA 15, *Standard for Water Spray Fixed Systems for Fire Protection*, shall be consulted to determine the requirements for design and installation, including acceptance testing.

10.1.3 Valves and Connections. Valves and fire department connections shall be inspected, tested, and maintained in accordance with Chapter 13.

10.1.4* Impairments. The procedures outlined in Chapter 15 shall be followed where an impairment to protection occurs.

10.1.4.1 When a water spray fixed system or any portion thereof is out of service for any reason, notice shall be given to facility management, the local fire department, the on-site fire brigade, and other authorities having jurisdiction, as applicable.

10.1.4.2 A sign shall be posted at each fire department connection or system control valve indicating which portion of the system is out of service.

Copyright National Fire Protection Association
Provided by IHS under license with NFPA
No reproduction or networking permitted without license from IHS
Not for Resale

Table 10.1 Summary of Water Spray Fixed System Inspection, Testing, and Maintenance

Item	Frequency	Reference
Inspection		
Backflow preventer		Chapter 13
Check valves		Chapter 13
Control valves	Weekly (sealed)	Chapter 13
Control valves	Monthly (locked, supervised)	Chapter 13
Deluge valve		10.2.2, Chapter 13
Detection systems		NFPA 72, *National Fire Alarm Code*
Detector check valves		Chapter 13
Drainage	Quarterly	10.2.8
Electric motor		10.2.9, Chapter 8
Engine drive		10.2.9, Chapter 8
Fire pump		10.2.9, Chapter 8
Fittings	Quarterly	10.2.4, 10.2.4.1
Fittings (rubber-gasketed)	Quarterly	10.2.4.1, A.10.2.4.1
Gravity tanks		10.2.10, Chapter 9
Hangers	Annually and after each system activation	10.2.4.2
Heat (deluge valve house)	Daily/weekly	10.2.1.5, Chapter 13
Nozzles	Annually and after each system activation	10.2.1.1, 10.2.1.2, 10.2.1.6, 10.2.5.1, 10.2.5.2
Pipe	Annually and after each system activation	10.2.1.1, 10.2.1.2, 10.2.4, 10.2.4.1
Pressure tank		10.2.10, Chapter 9
Steam driver		10.2.9, Chapter 8
Strainers	Mfg. instruction	10.2.7
Suction tanks		10.2.10, Chapter 9
Supports	Quarterly	10.2.1.1, 10.2.1.2, 10.2.4.2
Water supply piping		10.2.6.1, 10.2.6.2
UHSWSS — detectors	Monthly	10.4.2
UHSWSS — controllers	Each shift	10.4.3
UHSWSS — valves	Each shift	10.4.4
Operational Test		
Backflow preventer		Chapter 13
Check valves		Chapter 13
Control valves	Annually	13.3.3.1
Deluge valve		10.2.2, Chapter 13
Detection systems		*NFPA 72*
Detector check valve		Chapter 13
Electric motor		10.2.9, Chapter 8
Engine drive		10.2.9, Chapter 8
Fire pump		10.2.9, Chapter 8
Flushing	Annually	10.2.1.3, Section 10.3 (flushing of connection to riser, part of annual test)
Gravity tanks		10.2.10, Chapter 9
Main drain test	Annually	13.3.3.4
Manual release	Annually	10.2.1.3, 10.3.6
Nozzles	Annually	10.2.1.3, 10.2.1.6, Section 10.3
Pressure tank		Section 10.2, Chapter 9
Steam driver		10.2.9, Chapter 8
Strainers	Annually	10.2.1.3, 10.2.1.7, 10.2.7
Suction tanks		10.2.10, Chapter 9
Water-flow alarm	Quarterly	Chapter 5
Water spray system test	Annually	Section 10.3, Chapter 13
Water supply flow test		7.3.2
UHSWSS	Annually	Section 10.4
Maintenance		
Backflow preventer		Chapter 13
Check valves		Chapter 13
Control valves	Annually	10.2.1.4, Chapter 13
Deluge valve		10.2.2, Chapter 13

(continued)

Copyright National Fire Protection Association
Provided by IHS under license with NFPA
No reproduction or networking permitted without license from IHS
Not for Resale

Table 10.1 *Continued*

Item	Frequency	Reference
Maintenance ***(continued)***		
Detection systems		*NFPA 72*
Detector check valve		Chapter 13
Electric motor		10.2.9, Chapter 8
Engine drive		10.2.9, Chapter 8
Fire pump		10.2.9, Chapter 8
Gravity tanks		10.2.10, Chapter 9
Pressure tank		10.2.6, Chapter 9
Steam driver		10.2.9, Chapter 8
Strainers	Annually	10.2.1.4, 10.2.1.7, 10.2.7
Strainers (baskets/screen)	5 years	10.2.1.4, 10.2.1.8, A.10.2.7
Suction tanks		10.2.10, Chapter 9
Water spray system	Annually	10.2.1.4, Chapter 13

10.2 Inspection and Maintenance Procedures.

10.2.1 The components described in this section shall be inspected and maintained at the frequency specified in Table 10.1 and in accordance with this standard and the manufacturer's instructions.

10.2.1.1 Items in areas that are inaccessible for safety considerations due to factors such as continuous process operations and energized electrical equipment shall be inspected during each scheduled shutdown but not more than every 18 months.

10.2.1.2 Inspections shall not be required for items in areas with no provision for access and that are not subject to the conditions noted in 10.2.4.1, 10.2.4.2, and 10.2.5.1.

10.2.1.3 Items in areas that are inaccessible for safety considerations shall be tested at longer intervals in accordance with 13.4.3.2.2.2.

10.2.1.4 Other maintenance intervals shall be permitted, depending on the results of the visual inspection and operating tests.

10.2.1.5 Deluge valve enclosures shall be inspected in accordance with the provisions of Chapter 13.

10.2.1.6 Nozzle strainers shall be removed, inspected, and cleaned during the flushing procedure for the mainline strainer.

10.2.1.7 Mainline strainers shall be removed and inspected every 5 years for damaged and corroded parts.

10.2.2 Deluge Valves. Deluge valves shall be inspected, tested, and maintained in accordance with Chapter 13.

10.2.3 Automatic Detection Equipment.

10.2.3.1 Automatic detection equipment shall be inspected, tested, and maintained in accordance with *NFPA 72, National Fire Alarm Code*.

10.2.3.2 Automatic fire detection equipment not covered by *NFPA 72, National Fire Alarm Code*, shall be inspected, tested, and maintained to ensure that the detectors are in place, securely fastened, and protected from corrosion, weather, and mechanical damage and that the communication wiring, control panels, or tubing system is functional.

10.2.4* System Components. System piping, fittings, hangers, and supports shall be inspected and maintained to ensure continuity of water delivery to the spray nozzles at full waterflow and design pressure.

10.2.4.1* Piping and Fittings. System piping and fittings shall be inspected for the following:

(1) Mechanical damage (e.g., broken piping or cracked fittings)
(2) External conditions (e.g., missing or damaged paint or coatings, rust, and corrosion)
(3) Misalignment or trapped sections
(4) Low-point drains (automatic or manual)
(5) Location of rubber-gasketed fittings

10.2.4.2* Hangers and Supports. Hangers and supports shall be inspected for the following and repaired or replaced as necessary:

(1) Condition (e.g., missing or damaged paint or coating, rust, and corrosion)
(2) Secure attachment to structural supports and piping
(3) Damaged or missing hangers

10.2.5* Water Spray Nozzles.

10.2.5.1 Water spray nozzles shall be inspected and maintained to ensure that they are in place, continue to be aimed or pointed in the direction intended in the system design, and are free from external loading and corrosion.

10.2.5.2 Where caps or plugs are required, the inspection shall confirm they are in place and free to operate as intended.

10.2.5.3 Misaligned water spray nozzles shall be adjusted (aimed) by visual means, and the discharge patterns shall be checked at the next scheduled flow test.

10.2.6 Water Supply.

10.2.6.1 The dependability of the water supply shall be ensured by regular inspection and maintenance, whether furnished by a municipal source, on-site storage tanks, a fire pump, or private underground piping systems.

10.2.6.2* Water supply piping shall be maintained free of internal obstructions.

10.2.7* Strainers.

10.2.7.1 Mainline strainers (basket or screen) shall be flushed until clear after each operation or flow test.

10.2.7.2 Individual water spray nozzle strainers shall be removed, cleaned, and inspected after each operation or flow test.

Copyright National Fire Protection Association
Provided by IHS under license with NFPA
No reproduction or networking permitted without license from IHS
Not for Resale

10.2.7.3 All strainers shall be inspected and cleaned in accordance with the manufacturer's instructions.

10.2.7.4 Damaged or corroded parts shall be replaced or repaired.

10.2.8 Drainage. The area beneath and surrounding a water spray fixed system shall be inspected visually on a quarterly basis to ensure that drainage facilities, such as trap sumps and drainage trenches, are not blocked and retention embankments or dikes are in good repair.

10.2.9 Fire Pumps. Chapter 8 shall be followed for inspection and maintenance requirements.

10.2.10 Water Tanks (Gravity, Pressure, or Suction Tanks, or Reservoirs). Chapter 9 shall be followed for inspection and maintenance requirements.

10.3 Operational Tests.

10.3.1 Performance. Water spray fixed systems shall require competent and effective care and maintenance to ensure they perform as designed.

10.3.1.1 Frequency of system tests shall be in accordance with Table 10.1.

10.3.1.2 Water spray fixed systems shall be serviced in accordance with this standard and with the manufacturer's instructions.

10.3.2 Notification.

10.3.2.1 To avoid false alarms where a supervisory service is provided, the alarm receiving facility always shall be notified by the property owner or designated representative as follows:

(1) Before conducting any test or procedure that could result in the actuation of an alarm
(2) After such tests or procedures are concluded

10.3.2.2 All personnel whose operations could be affected by the system operation shall be notified.

10.3.3* Test Preparation. Precautions shall be taken to prevent damage to property during the test.

10.3.4 Operational Test Performance. Operational tests shall be conducted to ensure that the water spray fixed systems respond as designed, both automatically and manually.

10.3.4.1* Response Time.

10.3.4.1.1 Under test conditions, the heat detection systems, where exposed to a heat test source, shall operate within 40 seconds.

10.3.4.1.2 Under test conditions, the flammable gas detection system, where exposed to a standard test gas concentration, shall operate within the time frame specified in the system design.

10.3.4.1.3 These response times shall be recorded.

10.3.4.2 Discharge Time. The time lapse between operation of detection systems and water delivery time to the protected area shall be recorded.

10.3.4.3* Discharge Patterns.

10.3.4.3.1* The water discharge patterns from all of the open spray nozzles shall be observed to ensure that patterns are not impeded by plugged nozzles, to ensure that nozzles are correctly positioned, and to ensure that obstructions do not prevent discharge patterns from wetting surfaces to be protected.

10.3.4.3.1.1 Where the nature of the protected property is such that water cannot be discharged, the nozzles shall be inspected for proper orientation and the system tested with air to ensure that the nozzles are not obstructed.

10.3.4.3.2 Where obstructions occur, the piping and nozzles shall be cleaned and the system retested.

10.3.4.4 Pressure Readings.

10.3.4.4.1 Pressure readings shall be recorded at the hydraulically most remote nozzle to ensure the waterflow has not been impeded by partially closed valves or by plugged strainers or piping.

10.3.4.4.2 A second pressure reading shall be recorded at the deluge valve to ensure the water supply is adequate.

10.3.4.4.3 Readings shall be compared to the hydraulic design pressures to ensure the original system design requirements are met and the water supply is adequate to meet the design requirements.

10.3.4.4.3.1 Where the hydraulically most remote nozzle is inaccessible, nozzles shall be permitted to be checked visually without taking a pressure reading on the most remote nozzle.

10.3.4.4.3.2 Where the reading taken at the riser indicates that the water supply has deteriorated, a gauge shall be placed on the hydraulically most remote nozzle and the results compared with the required design pressure.

10.3.5 Multiple Systems. The maximum number of systems expected to operate in case of fire shall be tested simultaneously to check the adequacy of the water supply.

10.3.6 Manual Operation. Manual actuation devices shall be operated annually.

10.3.7 Return to Service. After the full flow test, the water spray system shall be maintained and returned to service in accordance with the manufacturer's instructions.

10.3.7.1 Main Drain Tests.

10.3.7.1.1 Main drain tests shall be conducted at the main riser to determine whether there has been any change in the condition of the water supply piping and controlling valves.

10.3.7.1.2 Static and residual water pressures shall be recorded respectively before, during, and after the operation of the fully opened drain valve.

10.3.7.1.3 Readings shall be compared with those made at the time of the original acceptance tests or with those made at the time of the last test to determine whether there has been any deterioration of the water supply.

10.3.7.2 Low Point Drains.

10.3.7.2.1 To prevent freezing and corrosion, all low point drains in aboveground piping shall be opened, the pipe drained, and the valves closed and plugs replaced.

10.3.7.2.2 Where weep holes are provided in lieu of low-point drains, they shall be inspected to ensure they are clear and unobstructed.

10.4 Ultra-High-Speed Water Spray System (UHSWSS) Operational Tests.

10.4.1 A full operational test, including measurements of response time, shall be conducted at intervals not exceeding 1 year.

--`,,```,,,,````-`-`,,`,,`,`,,`---

Copyright National Fire Protection Association
Provided by IHS under license with NFPA
No reproduction or networking permitted without license from IHS
Not for Resale

10.4.1.1 Systems out of service shall be tested before being placed back in service.

10.4.2 All detectors shall be tested and inspected monthly for physical damage and accumulation of deposits on the lenses of optical detectors.

10.4.3 Controllers shall be inspected for faults at the start of each working shift.

10.4.4 Valves.

10.4.4.1 Valves on the water supply line shall be inspected at the start of each working shift to verify they are open.

10.4.4.2 Valves secured in the open position with a locking device or monitored by a signaling device that sounds a trouble signal at the deluge system control panel or other central location shall not require inspection.

10.4.5 Response Time.

10.4.5.1 The response time shall be verified during the operational test.

10.4.5.2 The response time shall be in accordance with the requirements of the system but not more than 100 milliseconds.

10.5 Component Action Requirements.

10.5.1 Whenever a component in a water spray fixed system is adjusted, repaired, reconditioned, or replaced, the action required in Table 10.5.1 shall be performed.

10.5.1.1 Where the original installation standard is different from the cited standard, the use of the appropriate installing standard shall be permitted.

10.5.1.2 A main drain test shall be required if the system control or other upstream valve was operated in accordance with 13.3.3.4.

10.5.1.3 These actions shall not require a design review, which is outside the scope of this standard.

Table 10.5.1 Summary of Component Replacement Action Requirements

Component	Adjust	Repair/ Recondition	Replace	Required Action
Water Delivery Components				
Pipe and fittings	X	X	X	(1) Operational flow test
Nozzles	X	X	X	(1) Operational flow test
Manual release	X	X	X	(1) Operational test (2) Check for leaks at system working pressure (3) Test all alarms
Fire department connections				See Chapter 13
Valves	X	X	X	See Chapter 13
Fire pump	X	X	X	See Chapter 8
Alarm and Supervisory Components				
Pressure switch–type waterflow	X	X	X	(1) Operational test using inspector's test connection
Water motor gong	X	X	X	(1) Operational test using inspector's test connection
Valve supervisory device	X	X	X	Test for conformance with NFPA 15, *Standard for Water Spray Fixed Systems for Fire Protection*, and/or *NFPA 72, National Fire Alarm Code*
Detection system	X	X	X	Operational test for conformance with NFPA 15 and/or NFPA 72
Status-Indicating Components				
Gauges			X	Verify at 0 psi (0 bar) and system working pressure
Testing and Maintenance Components				
Main drain	X	X	X	Full flow main drain test
Auxiliary drains	X	X	X	(1) Check for leaks at system working pressure (2) Main drain test 2
Structural Components				
Hanger/seismic bracing	X	X	X	Check for conformance with NFPA 15 and/or NFPA 13, *Standard for the Installation of Sprinkler Systems*
Pipe stands	X	X	X	Check for conformance with NFPA 15 and /or NFPA 13
Informational Components				
Identification signs	X	X	X	Check for conformance with NFPA 15

Copyright National Fire Protection Association
Provided by IHS under license with NFPA
No reproduction or networking permitted without license from IHS
Not for Resale

Chapter 11 Foam-Water Sprinkler Systems

11.1 General. This chapter shall provide the minimum requirements for the routine inspection, testing, and maintenance of foam-water systems. Table 11.1 shall be used to determine the minimum required frequencies for inspection, testing, and maintenance.

11.1.1 Fire pumps, water storage tanks, and valves common to other types of water-based fire protection systems shall be inspected, tested, and maintained in accordance with Chapters 8, 9, and 13, respectively, and as specified in Table 11.1.

11.1.2 Foam-Water Systems.

11.1.2.1 This section shall apply to foam-water systems as specified in NFPA 16, *Standard for the Installation of Foam-Water Sprinkler and Foam-Water Spray Systems.*

11.1.2.2 This section shall not include systems detailed in NFPA 11, *Standard for Low-, Medium-, and High-Expansion Foam.*

Table 11.1 Summary of Foam-Water Sprinkler System Inspection, Testing, and Maintenance

System/Component	Frequency	Reference
Inspection		
Discharge device location (sprinkler)	Annually	11.2.5
Discharge device location (spray nozzle)	Monthly	11.2.5
Discharge device position (sprinkler)	Annually	11.2.5
Discharge device position (spray nozzle)	Monthly	11.2.5
Foam concentrate strainer(s)	Quarterly	11.2.7.2
Drainage in system area	Quarterly	11.2.8
Proportioning system(s) — all	Monthly	11.2.9
Pipe corrosion	Annually	11.2.3
Pipe damage	Annually	11.2.3
Fittings corrosion	Annually	11.2.3
Fittings damage	Annually	11.2.3
Hangers/supports	Annually	11.2.4
Waterflow devices	Quarterly	11.2.1
Water supply tank(s)		Chapter 9
Fire pump(s)		Chapter 8
Water supply piping		11.2.6.1
Control valve(s)	Weekly/monthly	—
Deluge/preaction valve(s)		11.2.1, Chapter 13
Detection system	See *NFPA 72, National Fire Alarm Code*	11.2.2
Test		
Discharge device location	Annually	11.3.3.6
Discharge device position	Annually	11.3.3.6
Discharge device obstruction	Annually	11.3.3.6
Foam concentrate strainer(s)	Annually	11.2.7.2
Proportioning system(s) — all	Annually	11.2.9
Complete foam-water system(s)	Annually	11.3.3
Foam-water solution	Annually	11.3.6
Manual actuation device(s)	Annually	11.3.5
Backflow preventer(s)	Annually	Chapter 13
Fire pump(s)	See Chapter 8	—
Waterflow devices	Quarterly/Semi-annually	11.3.1
Water supply piping	Annually	Chapter 10
Control valve(s)	See Chapter 13	—
Strainer(s) — mainline	See Chapter 10	11.2.7.1
Deluge/preaction valve(s)	See Chapter 13	11.2.1
Detection system	See *NFPA 72*	11.2.2
Backflow preventer(s)	See Chapter 13	—
Water supply tank(s)	See Chapter 9	—
Water supply flow test	See Chapter 4	11.2.6
Maintenance		
Foam concentrate pump operation	Monthly	11.4.6.1, 11.4.7.1
Foam concentrate strainer(s)	Quarterly	Section 11.4
Foam concentrate samples	Annually	11.2.10
Proportioning system(s) standard pressure type		
Ball drip (automatic type) drain valves	5 years	11.4.3.1
Foam concentrate tank — drain and flush	10 years	11.4.3.2
Corrosion and hydrostatic test	10 years	11.4.3.3

(continued)

--`,,```,,,,````-`-`,,`,,`,`,,`---

Copyright National Fire Protection Association
Provided by IHS under license with NFPA
No reproduction or networking permitted without license from IHS

Not for Resale

Table 11.1 *Continued*

System/Component	Frequency	Reference
Maintenance ***(continued)***		
Bladder tank type		
Sight glass	10 years	11.4.4.1
Foam concentrate tank — hydrostatic test	10 years	11.4.4.2
Line type		
Foam concentrate tank — corrosion and pickup pipes	10 years	11.4.5.1
Foam concentrate tank — drain and flush	10 years	11.4.5.2
Standard balanced pressure type		
Foam concentrate pump(s)	5 years *(see Note)*	11.4.6.2
Balancing valve diaphragm	5 years	11.4.6.3
Foam concentrate tank	10 years	11.4.6.4
In-line balanced pressure type		
Foam concentrate pump(s)	5 years *(see Note)*	11.4.7.2
Balancing valve diaphragm	5 years	11.4.7.3
Foam concentrate tank	10 years	11.4.7.4
Pressure vacuum vents	5 years	11.4.8
Water supply tank(s)	See Chapter 9	—
Fire pump(s)	See Chapter 8	—
Water supply	Annually	11.2.6.1
Backflow preventer(s)	See Chapter 13	—
Detector check valve(s)	See Chapter 13	—
Check valve(s)	See Chapter 13	—
Control valve(s)	See Chapter 13	—
Deluge/preaction valves	See Chapter 13	11.2.1
Strainer(s) — mainline	See Chapter 10	—
Detection system	See *NFPA 72*	11.2.2

Note: Also refer to manufacturer's instructions and frequency. Maintenance intervals other than preventive maintenance are not provided, as they depend on the results of the visual inspections and operational tests. For foam-water systems in aircraft hangars, refer to the inspection, test, and maintenance requirements of NFPA 409, *Standard on Aircraft Hangars*, Table 11.1.1.

11.1.3 Foam-Water System.

11.1.3.1 If during routine inspection and testing it is determined that the foam-water system has been altered or changed (e.g., equipment replaced, relocated, or foam concentrate replaced), it shall be determined whether the design intent has been altered and whether the system operates properly.

11.1.3.1.1 Mechanical waterflow devices, including but not limited to water motor gongs, shall be tested quarterly.

11.1.3.1.2 Valve-type and pressure switch–type waterflow devices shall be tested semiannually.

11.1.3.1.3 Waterflow Devices. Waterflow devices shall be inspected quarterly to verify that they are free of physical damage.

11.1.3.2 The inspection shall verify that all components, including foam concentrate discharge devices and proportioning equipment, are installed in accordance with their listing.

11.1.4 Impairments. The procedures outlined in Chapter 15 shall be followed where an impairment to protection occurs.

11.1.5 Notification to Supervisory Service. To avoid false alarms where a supervisory service is provided, the alarm receiving facility shall be notified by the property owner or designated representative as follows:

(1) Before conducting any test or procedure that could result in the activation of an alarm
(2) After such tests or procedures are concluded

11.2 Inspection. Systems shall be inspected in accordance with the frequency specified in Table 11.1.

11.2.1 Deluge Valves. Deluge valves shall be inspected in accordance with the provisions of Chapter 13.

11.2.2 Automatic Detection Equipment. Automatic detection equipment shall be inspected, tested, and maintained in accordance with *NFPA 72*, *National Fire Alarm Code*, to ensure that the detectors are in place, securely fastened, and protected from corrosion, weather, and mechanical damage and that the communication wiring, control panels, or pneumatic tubing system is functional.

11.2.3 System Piping and Fittings. System piping and fittings shall be inspected for the following:

(1) Mechanical damage (e.g., broken piping or cracked fittings)
(2) External conditions (e.g., missing or damaged paint or coatings, rust, and corrosion)
(3) Misalignment or trapped sections
(4) Low-point drains (automatic or manual)
(5) Location and condition of rubber-gasketed fittings

11.2.4 Hangers and Supports. Hangers and supports shall be inspected for the following and repaired or replaced as necessary:

(1) Condition (e.g., missing or damaged paint or coating, rust, and corrosion)
(2) Secure attachment to structural supports and piping
(3) Damaged or missing hangers

11.2.5* Foam-Water Discharge Devices.

11.2.5.1 Foam-water discharge devices shall be inspected visually and maintained to ensure that they are in place, continue to be aimed or pointed in the direction intended in the system design, and are free from external loading and corrosion.

Copyright National Fire Protection Association
Provided by IHS under license with NFPA
No reproduction or networking permitted without license from IHS
Not for Resale

11.2.5.2 Where caps or plugs are required, the inspection shall confirm they are in place and free to operate as intended.

11.2.5.3 Misaligned discharge devices shall be adjusted (aimed) by visual means, and the discharge patterns shall be checked at the next scheduled flow test.

11.2.5.4* Inspection shall verify that unlisted combinations of discharge devices and foam concentrate have not been substituted.

11.2.6 Water Supply.

11.2.6.1 The dependability of the water supply shall be ensured by regular inspection and maintenance, whether furnished by a municipal source, on-site storage tanks, a fire pump, or private underground piping systems.

11.2.6.2* Water supply piping shall be maintained free of internal obstructions.

11.2.7 Strainers.

11.2.7.1 Mainline and individual discharge device strainers (basket or screen) shall be inspected in accordance with the provisions of Chapter 10.

11.2.7.2 Foam concentrate strainers shall be inspected visually to ensure the blow-down valve is closed and plugged.

11.2.7.2.1 Baskets or screens shall be removed and inspected after each operation or flow test.

11.2.8 Drainage. The area beneath and surrounding a foam-water spray system shall be inspected to ensure that drainage facilities, such as trap sumps and drainage trenches, are not blocked and retention embankments or dikes are in good repair.

11.2.9* Proportioning Systems.

11.2.9.1 The components of the various proportioning systems described in 11.2.9 shall be inspected in accordance with the frequency specified in Table 11.1.

11.2.9.2 Valves specified to be checked shall be permitted to be open or closed, depending on specific functions within each foam-water system.

11.2.9.3 The position (open or closed) of valves shall be verified in accordance with specified operating conditions.

11.2.9.4* Inspection of the concentrate tank shall include verification that the quantity of foam concentrate satisfies the requirements of the original design.

11.2.9.5 Additional inspection requirements shall be performed as detailed for the proportioning systems specified in 11.2.9.

11.2.9.5.1* Standard Pressure Proportioner. The pressure shall be removed before the inspection to prevent injury. The inspection shall verify the following:

(1) Ball drip valves (automatic drains) are free and opened.
(2) External corrosion on foam concentrate storage tanks is not present.

11.2.9.5.2* Bladder Tank Proportioner. The pressure shall be removed before the inspection to prevent injury. The inspection shall include the following:

(1) Water control valves to foam concentrate tank
(2) A check for external corrosion on foam concentrate storage tanks
(3) A check for the presence of foam in the water surrounding the bladder (annual)

11.2.9.5.3 Line Proportioner. The inspection shall include the following:

(1)*Strainers
(2)*Verification that pressure vacuum vent is operating freely
(3) A check for external corrosion on foam concentrate storage tanks

11.2.9.5.4 Standard Balanced Pressure Proportioner. The inspection shall include the following:

(1)*Strainers
(2)*Verification that pressure vacuum vent is operating freely
(3) Verification that gauges are in good operating condition
(4) Verification that sensing line valves are open
(5) Verification that power is available to foam liquid pump

11.2.9.5.5 In-Line Balanced Pressure Proportioner. The inspection shall include the following:

(1)*Strainers
(2)*Verification that pressure vacuum vent is operating freely
(3) Verification that gauges are in good working condition
(4) Verification that sensing line valves at pump unit and individual proportioner stations are open
(5) Verification that power is available to foam liquid pump

11.2.9.5.6 Orifice Plate Proportioner. The inspection shall include the following:

(1)*Strainers
(2)*Verification that pressure vacuum vent is operating freely
(3) Verification that gauges are in good working condition
(4) Verification that power is available to foam liquid pump

11.2.10 Foam Concentrate Samples. Samples shall be submitted in accordance with the manufacturer's recommended sampling procedures.

11.3* Operational Tests. Frequency of system tests shall be in accordance with Table 11.1.

11.3.1* Test Preparation. Precautions shall be taken to prevent damage to property during the test.

11.3.1.1 Mechanical waterflow devices, including but not limited to water motor gongs, shall be tested quarterly.

11.3.1.2 Vane-type and pressure switch–type waterflow devices shall be tested semiannually.

11.3.1.3 Waterflow Devices. Waterflow devices shall be inspected quarterly to verify that they are free of physical damage.

11.3.2* Operational Test Performance.

11.3.2.1 Operational tests shall be conducted to ensure that the foam-water system(s) responds as designed, both automatically and manually.

11.3.2.2 The test procedures shall simulate anticipated emergency events so the response of the foam-water system(s) can be evaluated.

11.3.2.3 Where discharge from the system discharge devices would create a hazardous condition or conflict with local requirements, an approved alternate method to achieve full flow conditions shall be permitted.

11.3.2.4 Response Time. Under test conditions, the automatic fire detection systems, when exposed to a test source, shall operate within the requirements of *NFPA 72, National Fire Alarm Code*, for the type of detector provided, and the response time shall be recorded.

Copyright National Fire Protection Association
Provided by IHS under license with NFPA
No reproduction or networking permitted without license from IHS
Not for Resale

11.3.2.5 Discharge Time. The time lapse between operation of detection systems and water delivery time to the protected area shall be recorded for open discharge devices.

11.3.2.6 Discharge Patterns.

11.3.2.6.1 The discharge patterns from all of the open spray devices shall be observed to ensure that patterns are not impeded by plugged discharge devices and to ensure that discharge devices are correctly positioned and that obstructions do not prevent discharge patterns from covering surfaces to be protected.

11.3.2.6.2 Where obstructions occur, the piping and discharge devices shall be cleaned and the system retested.

11.3.2.6.3 Discharge devices shall be permitted to be of different orifice sizes and types.

11.3.2.7* Pressure Readings.

11.3.2.7.1 Pressure readings shall be recorded at the highest, most remote discharge device.

11.3.2.7.2 A second pressure reading shall be recorded at the main control valve.

11.3.2.7.3 Readings shall be compared to the hydraulic design pressures to ensure the original system design requirements are met.

11.3.3 Multiple Systems. The maximum number of systems expected to operate in case of fire shall be tested simultaneously to check the adequacy of the water supply and concentrate pump.

11.3.4 Manual Actuation Devices. Manual actuation devices shall be tested annually.

11.3.5 Concentration Testing.

11.3.5.1 During the full flow foam test, a foam sample shall be taken.

11.3.5.2 The foam sample shall be checked by refractometric or other methods to verify concentration of the solution.

11.3.5.3 Concentration shall be within 10 percent of the acceptance test results but in no case more than 10 percent below minimum design standards.

11.3.6 Return to Service. After the full flow test, the foam-water system shall be returned to service and the foam concentrate tank shall be replenished to design level.

11.4* Maintenance.

11.4.1 Maintenance of foam-water systems shall be in accordance with the requirements of those chapters covering the specific component parts.

11.4.2 Maintenance of specific foam components shall be in accordance with 11.4.3 through 11.4.7.

11.4.3 Standard Pressure Proportioner.

11.4.3.1 The ball drip (automatic type) drain valves shall be disassembled, cleaned, and reassembled.

11.4.3.2* The foam liquid storage tank shall be drained of foam liquid and flushed. (Foam liquid shall be permitted to be salvaged and reused.)

11.4.3.3 The foam liquid tank shall be inspected for internal and external corrosion and hydrostatically tested to the specified working pressure.

11.4.4 Bladder Tank Proportioner.

11.4.4.1 Sight glass, where provided, shall be removed and cleaned.

11.4.4.2* The foam concentrate tank shall be hydrostatically tested to the specified working pressure.

11.4.5 Line Proportioner.

11.4.5.1 The foam concentrate tank shall be inspected for internal corrosion. Pickup pipes inside the tank shall be inspected for corrosion, separation, or plugging.

11.4.5.2 The foam concentrate tank shall be drained and flushed. (Foam concentrate shall be permitted to be salvaged and reused.)

11.4.6 Standard Balanced Pressure Proportioner.

11.4.6.1 The foam concentrate pump shall be operated. Foam concentrate shall be circulated back to the tank.

11.4.6.2 Foam pumps, drive train, and drivers shall be serviced in accordance with the manufacturer's instructions and frequency, but not at intervals of more than 5 years.

11.4.6.3 The diaphragm balancing valve shall be flushed through the diaphragm section with water or foam concentrate until fluid appears clear or new.

11.4.6.4 The foam concentrate tank shall be inspected internally for corrosion and sediment. Excessive sediment shall require draining and flushing of the tank.

11.4.7 In-Line Balanced Pressure Proportioner.

11.4.7.1 The foam concentrate pump shall be operated. Foam concentrate shall be circulated back to the tank.

11.4.7.2 Foam pumps, drive train, and drivers shall be serviced in accordance with the manufacturer's instructions and frequency, but not at intervals of more than 5 years.

11.4.7.3 The diaphragm balancing valve shall be flushed through the diaphragm section with water or foam concentrate until fluid appears clear or new.

11.4.7.4 The foam concentrate tank shall be inspected internally for corrosion and sediment. Excessive sediment shall require draining and flushing of the tank.

11.4.8 Pressure Vacuum Vents. The procedures specified in 11.4.8.1 through 11.4.8.8 shall be performed on pressure vacuum vents every 5 years.

11.4.8.1 The vent shall be removed from the expansion dome. While the vent is removed, it shall be ensured that the opening is not blocked and that dirt or other foreign objects do not enter the tank.

11.4.8.2 The vest bonnet shall be removed. The vacuum valve and pressure valve shall be lifted out.

11.4.8.3 The vent body shall be flushed internally, and the vacuum valve and the pressure valve shall be washed thoroughly. It shall be ensured that the screen is not clogged, and the use of any hard, pointed objects to clear the screen shall be avoided.

11.4.8.4 If the liquid has become excessively gummy or solidified, the vent body and parts shall be soaked in hot soapy water.

11.4.8.5 The vent body shall be turned upside down and drained thoroughly. Parts shall be dried by placing them in a warm and dry area or by using an air hose.

Copyright National Fire Protection Association
Provided by IHS under license with NFPA
No reproduction or networking permitted without license from IHS
Not for Resale

11.4.8.6 Parts shall be sprayed with a light Teflon® coating, and the vent shall be reassembled. The use of any type of oil for lubrication purposes shall be avoided, as oil is harmful to the foam liquid.

11.4.8.7 The vent bonnet shall be replaced, and the vent shall be turned upside down slowly a few times to ensure proper freedom of the movable parts.

11.4.8.8 The vent shall be attached to the liquid storage tank expansion dome.

• **11.5 Component Action Requirements.**

11.5.1 Whenever a component in a foam-water sprinkler system is adjusted, repaired, reconditioned, or replaced, the action required in Table 11.5.1 shall be performed.

Table 11.5.1 Summary of Component Replacement Action Requirements

Component	Adjust	Repair/ Recondition	Replace	Required Action
Water Delivery Components				
Pipe and fittings on open head system	X	X	X	(1) Operational flow test
Pipe and fittings on closed head system	X	X	X	(1) Hydrostatic test in conformance with NFPA 16, *Standard for the Installation of Foam-Water Sprinkler and Foam-Water Spray Systems*
Discharge devices	X		X	(1) Check for leaks at system working pressure (2) Check for impairments at orifice
Fire department connections	X	X	X	See Chapter 13
Manual release	X	X	X	(1) Operational test (2) Check for leaks at system working pressure (3)Test all alarms
Valves	X	X	X	See Chapter 13
Fire pump	X	X	X	See Chapter 8
Foam Components				
Foam concentrate strainer(s)				See Chapter 13
Proportioning system(s)	X	X	X	Conduct flow test and check proportioning by refractometer test or equivalent
Water supply tank(s)				See Chapter 9
Foam concentrate	X		X	Submit 1 pint (473 mL) sample for laboratory analysis for conformance with manufacturer's specifications
Foam concentrate pump				See Chapter 8
Ball drip (automatic type) drain valves				See Chapter 13
Foam concentrate tank	X	X	X	Inspect for condition, repair as appropriate
Bladder tank	X	X	X	Check water jacket for presence of foam concentrate
Alarm and Supervisory Components				
Vane-type waterflow	X	X	X	(1) Operational test using inspector's test connection
Pressure switch–type waterflow	X	X	X	(1) Operational test using inspector's test connection
Water motor gong			X	(1) Operational test using inspector's test connection
Valve supervisory device			X	Test for conformance with NFPA 16 and/or *NFPA 72, National Fire Alarm Code*
Detection system	X	X	X	Operational test for conformance with NFPA 16 and/or *NFPA 72*
Status-Indicating Components				
Gauges			X	Verify at 0 psi (0 bar) and system working pressure
Testing and Maintenance Components				
Main drain	X	X	X	Full flow main drain test
Auxiliary drains	X	X	X	(1) Check for leaks at system working pressure
Inspector's test connection	X	X	X	(1) Check for leaks at system working pressure
Structural Components				
Hanger/seismic bracing	X	X	X	Check for conformance with NFPA 16 and /or NFPA 13, *Standard for the Installation of Sprinkler Systems*
Pipe stands	X	X	X	Check for conformance with NFPA 16 and /or NFPA 13
Informational Components				
Valve signs	X	X	X	Check for conformance with NFPA 16 and /or NFPA 13
Hydraulic placards	X	X	X	Check for conformance with NFPA 16 and /or NFPA 13

Copyright National Fire Protection Association
Provided by IHS under license with NFPA
No reproduction or networking permitted without license from IHS
Not for Resale

11.5.2 Where the original installation standard is different from the cited standard, the use of the appropriate installing standard shall be permitted.

11.5.3 A main drain test shall be required if the system control or other upstream valve was operated in accordance with 13.3.3.4.

11.5.4 The actions of 11.5.1 through 11.5.3 shall not require a design review, which is outside the scope of this standard.

Chapter 12 Water Mist Systems

12.1 Responsibility of the Owner or Occupant. [**750:13.1**]

12.1.1 General. [750:13.1.1]

12.1.1.1 The responsibility for properly maintaining a water mist fire protection system shall be the obligation of the property owner. [**750:13.1.1.1**]

12.1.1.2 By means of periodic inspection, tests, and maintenance, in accordance with the standard and manufacturers' requirements, either this equipment shall be shown to be in good operating condition or that defects or impairments exist. [**750:13.1.1.2**]

12.1.1.3 Inspection, testing, and maintenance activities shall be implemented in accordance with procedures meeting or exceeding those established in this document and in accordance with the manufacturer's instructions. [**750:13.1.1.3**]

12.1.1.4 These tasks shall be performed by personnel who have developed competence through training and experience. [**750:13.1.1.4**]

12.1.2 Notification. [750:13.1.2]

12.1.2.1 The owner or occupant shall notify the authority having jurisdiction, the fire department (if required), and the alarm receiving facility before shutting down a system or its supply. [**750:13.1.2.1**]

12.1.2.2 The notification shall include the purpose of the shutdown, the system or component involved, and the estimated time needed. [**750:13.1.2.2**]

12.1.2.3 The authority having jurisdiction, the fire department, and the alarm receiving facility shall be notified when the system, supply, or component is returned to service. [**750:13.1.2.3**]

12.1.3 Correction or Repair. [750:13.1.3]

12.1.3.1 The owner or occupant shall promptly correct or repair deficiencies, damaged parts, or impairments found while performing the inspection, test, and maintenance requirements of this standard. [**750:13.1.3.1**]

12.1.3.2 Corrections and repairs shall be performed by qualified maintenance personnel or a qualified contractor. [**750:13.1.3.2**]

12.1.4 System Reevaluation. [750:13.1.4]

12.1.4.1 The owner or occupant shall give special attention to factors that might alter the requirements for a continued approved installation. [**750:13.1.4.1**]

12.1.4.2 Such factors shall include, but shall not be limited to, the following:

(1) Occupancy changes
(2) Process or material changes
(3) Structural revisions such as relocated walls, added horizontal or vertical obstructions, or ventilation changes
(4) Removal of heating systems in spaces with piping subject to freezing [**750:13.1.4.2**]

12.1.5 Changes of Occupancy. [750:13.1.5]

12.1.5.1 Where changes in the occupancy, hazard, water supply, storage arrangement, structural modification, or other condition that affect the installation criteria of the system are identified, the owner or occupant shall promptly take steps to evaluate the adequacy of the installed system to protect the hazard in question, such as contacting a qualified contractor, consultant, or engineer. [**750:13.1.5.1**]

12.1.5.2 Where the evaluation reveals a deficiency, the owner shall notify the insurance underwriter, the authority having jurisdiction, and the local fire department. [**750:13.1.5.2**]

12.1.6 Return to Service. [750:13.1.6]

12.1.6.1 Where a water mist system is returned to service following an impairment, it shall be verified that it is working properly. [**750:**13.1.6.1]

12.1.6.2 Chapter 12 of NFPA 750 shall be referenced to provide guidance on the type of inspection or test, or both, that is required. [**750:**13.1.6.2]

12.2 Inspection and Testing. [750:13.2]

12.2.1 Components and Systems. [750:13.2.1]

12.2.1.1 All components and systems shall be inspected and tested to verify that they function as intended. [**750:**13.2.1.1]

12.2.1.2 Water mist systems that are equipped with an additive system shall be tested with the specific additive system engaged or used during the acceptance testing. [**750:**13.2.1.2]

12.2.2 Requirements. The components of typical water mist systems to be inspected and tested are provided in Table 12.2.2. [**750:**13.2.2]

12.2.3 Frequencies. The frequency of inspections and tests shall be in accordance with Table 12.2.2 or as specified in the manufacturer's listing, whichever is more frequent. [**750:**13.2.3]

12.2.4* Restoration. Following tests of components or portions of water mist systems that require valves to be opened or closed, the system shall be returned to service, with verification that all valves are restored to their normal operating position, that the water has been drained from all low points, that screens and filters have been checked and cleaned, and that plugs or caps for auxiliary drains or test valves have been replaced. [**750:**13.2.4]

12.2.5 Specialized Equipment. Specialized equipment required for testing shall be in accordance with the manufacturer's specifications. [**750:**13.2.5]

12.2.6 High Pressure Cylinders. High pressure cylinders used in water mist systems shall not be recharged without a hydrostatic test (and remarking) if more than 5 years have elapsed from the date of the last test. Cylinders that have been in continuous service without discharging shall be permitted to be retained in service for a maximum of 12 years, after which they shall be discharged and retested before being returned to service. [**750:**13.2.6]

Copyright National Fire Protection Association
Provided by IHS under license with NFPA
No reproduction or networking permitted without license from IHS
Not for Resale

Table 12.2.2 Maintenance of Water Mist Systems

Item	Task	Weekly	Monthly	Quarterly	Semi-annually	Annually	Other
Water supply (general)	Check source pressure.			X			
	Check source quality (*first year).				X*	X	
	Test source pressure, flow, quantity, duration.					X	
Water storage tanks	Check water level (unsupervised).	X					
	Check water level (supervised).			X			
	Check sight glass valves are open.		X				
	Check tank gauges, pressure.			X			
	Check all valves, appurtenances.				X		
	Drain tank, inspect interior, and refill.					X	
	Inspect tank condition (corrosion).					X	
	Check water quality.					X	
	Check water temperature						Extreme weather
Water storage cylinder (high pressure)	Check water level (load cells).				X		
	Check water level (unsupervised).			X			
	Check support frame/restraints.					X	
	Check vent plugs at refilling.					X	
	Check cylinder pressure on discharge.					X	
	Inspect filters on refill connection					X	
Additive storage cylinders	Inspect general condition, corrosion.			X			
	Check quantity of additive agent.				X		
	Test quality of additive agent.					X	
	Test additive injection, full discharge test.					X	
Water recirculation tank	Check water level (unsupervised).		X				
	Check water level (supervised).			X			
	Inspect supports, attachments.					X	
	Test low water level alarm.					X	
	Check water quality, drain, flush and refill.					X	
	Test operation of float operated valve.					X	
	Test pressure at outlet during discharge.					X	
	Test backflow prevention device (if present).					X	
	Inspect and clean filters, strainers, cyclone separator.					X	
Compressed gas cylinders	Inspect support frame and cylinder restraints.			X			
	Check cylinder pressure (unsupervised).		X				
	Check cylinder pressure (supervised).			X			
	Check cylinder control valve is open.		X				
	Check cylinder capacity and pressure rating.					X	
	Check cylinder compliance specification.					X	
	Confirm compressed gas meets specifications (moisture, cylinder pressure).					X	
	Hydrostatic test cylinders						5–12 years
Plant air, compressors, and receivers	Check air pressure (unsupervised).	X					
	Check air pressure (supervised).		X				

(continued)

Copyright National Fire Protection Association
Provided by IHS under license with NFPA
No reproduction or networking permitted without license from IHS
Not for Resale

Table 12.2.2 *Continued*

Item	Task	Weekly	Monthly	Quarterly	Semi-annually	Annually	Other
Plant air, compressors, and receivers *(continued)*	Start compressor.	X					
	Check compressor/receiver capacity, changes.				X		
	Check compressed air moisture content.					X	
	Clean filters, moisture traps.				X		
	Test full capacity, duration, and any changes in other demands.					X	
Pumps and drivers	Inspection, testing, and maintenance shall be in accordance with the requirements of NFPA 20, *Standard for the Installation of Stationary Pumps for Fire Protection*, and NFPA 25.	X	X	X	X	X	
Standby pump	Inspect moisture trap, oil injection (pneumatic).			X			
	Check compressed gas supply, inlet air pressure.		X				
	Check outlet water (standby) pressure.		X				
	Test start/stop pressure settings for standby pressure.			X			
Pneumatic valves	Check cylinder valves, master release valves.		X				
	Inspect all tubing associated with release valves.			X			
	Test solenoid release of master release valve.					X	
	Test manual release of master release valve.					X	
	Test operation of slave valves.					X	
	Reset all pneumatic cylinder release valves.					X	
	Test on-off cycling of valves intended to cycle.					X	
System control valves	Inspection, testing, and maintenance shall be in accordance with the requirements of NFPA 25.	X	X	X	X	X	
Control equipment	Inspection, testing, and maintenance shall be in accordance with the requirements of *NFPA 72, National Fire Alarm Code*.						
Water mist system piping and nozzles	Inspection, testing, and maintenance shall be in accordance with NFPA 25. Inspect sample of nozzle screens and strainers (see 10.3.7).	X	X	X	X	X	After discharge
Enclosure features, interlocks	Inspect enclosure integrity.				X		
Ventilation	Test interlocked systems (e.g., ventilation shutdown).					X	
	Test shutdown of fuel/lubrication systems.					X	

[**750:** Table 13.2.2]

Copyright National Fire Protection Association
Provided by IHS under license with NFPA
No reproduction or networking permitted without license from IHS
Not for Resale

12.3 Maintenance. [750:13.3]

12.3.1 Maintenance shall be performed to keep the system equipment operable or to make repairs. [**750:**13.3.1]

12.3.1.1 Mechanical waterflow devices including but not limited to water motor gongs shall be tested quarterly.

12.3.1.2 Vane-type and pressure switch–type waterflow devices shall be tested semi-annually.

12.3.1.3 Waterflow devices shall be inspected quarterly to verify that they are free of physical damage.

12.3.2 As-built system installation drawings, original acceptance test records, and device manufacturer's maintenance bulletins shall be retained to assist in the proper care of the system and its components. [**750:**13.3.2]

12.3.3 Preventive maintenance includes, but is not limited to, lubricating control valve stems, adjusting packing glands on valves and pumps, bleeding moisture and condensation from air compressors and air lines, and cleaning strainers. [**750:**13.3.3]

12.3.4 Scheduled maintenance shall be performed as outlined in Table 12.3.4. [**750:**13.3.4]

12.3.5 Corrective maintenance includes, but is not limited to, replacing loaded, corroded, or painted nozzles, replacing missing or loose pipe hangers, cleaning clogged fire pumps, replacing valve seats and gaskets, and restoring heat in areas subject to freezing temperatures where water-filled piping is installed. [**750:**13.3.5]

Table 12.3.4 Maintenance Frequencies

Item	Activity	Frequency
Water tank	Drain and refill	Annually
System	Flushing	Annually
Strainers and filters	Clean or replace as required	After system operation

[**750:**13.3.4]

12.3.6 Emergency maintenance includes, but is not limited to, repairs due to piping failures caused by freezing or impact damage, repairs to broken water mains, and replacement of frozen or fused nozzles, defective electric power, or alarm and detection system wiring. [**750:**13.3.6]

12.3.7 Specific maintenance activities, where applicable to the type of water mist system, shall be performed in accordance with the schedules in Table 12.3.4. [**750:**13.3.7]

12.3.8 Replacement components shall be in accordance with the manufacturer's specifications and the original system design. [**750:**13.3.8]

12.3.9 Spare components shall be accessible and shall be stored in a manner to prevent damage or contamination. [**750:**13.3.9]

12.3.10* After each system operation, a representative sample of operated water mist nozzles in the activated zone shall be inspected. [**750:**13.3.10]

12.3.11 After each system operation due to fire, the system filters and strainers shall be cleaned or replaced. [**750:**13.3.11]

12.4 Training.

12.4.1 All persons who might be expected to inspect, test, maintain, or operate water mist systems shall be trained thoroughly in the functions they are expected to perform. [**750:**13.4.1]

12.4.2 Refresher training shall be provided as recommended by the manufacturer or by the authority having jurisdiction. [**750:**13.4.2]

Chapter 13 Valves, Valve Components, and Trim

13.1* General. This chapter shall provide the minimum requirements for the routine inspection, testing, and maintenance of valves, valve components, and trim. Table 13.1 shall be used to determine the minimum required frequencies for inspection, testing, and maintenance.

Table 13.1 Summary of Valves, Valve Components, and Trim Inspection, Testing, and Maintenance

Item	Frequency	Reference
Inspection		
Control Valves		
Sealed	Weekly	13.3.2.1
Locked	Monthly	13.3.2.1.1
Tamper switches	Monthly	13.3.2.1.1
Alarm Valves		
Exterior	Monthly	13.4.1.1
Interior	5 years	13.4.1.2
Strainers, filters, orifices	5 years	13.4.1.2
Check Valves		
Interior	5 years	13.4.2.1
Preaction/Deluge Valves		
Enclosure (during cold weather)	Daily/weekly	13.4.3.1
Exterior	Monthly	13.4.3.1.6

(continued)

Copyright National Fire Protection Association
Provided by IHS under license with NFPA
No reproduction or networking permitted without license from IHS
Not for Resale

Table 13.1 *Continued*

Item	Frequency	Reference
Inspection *(continued)*		
Interior	Annually/5 years	13.4.3.1.7
Strainers, filters, orifices	5 years	13.4.3.1.8
Dry Pipe Valves/ Quick-Opening Devices		
Enclosure (during cold weather)	Daily/weekly	13.4.4.1.1
Exterior	Monthly	13.4.4.1.4
Interior	Annually	13.4.4.1.5
Strainers, filters, orifices	5 years	13.4.4.1.6
Pressure Reducing and Relief Valves		
Sprinkler systems	Annually	13.5.1.1
Hose connections	Annually	13.5.2.1
Hose racks	Annually	13.5.3.1
Fire pumps		
Casing relief valves	Weekly	13.5.6.1, 13.5.6.1.1
Pressure relief valves	Weekly	13.5.6.2, 13.5.6.2.1
Backflow Prevention Assemblies		
Reduced pressure	Weekly/monthly	13.6.1
Reduced pressure detectors	Weekly/monthly	13.6.1
Fire Department Connections	Quarterly	13.7.1
Test		
Main Drains	Annually/quarterly	13.2.6, 13.2.6.1, 13.3.3.4
Waterflow Alarms	Quarterly/semiannually	13.2.6
Control Valves		
Position	Annually	13.3.3.1
Operation	Annually	13.3.3.1
Supervisory	Semiannually	13.3.3.5
Preaction/Deluge Valves		
Priming water	Quarterly	13.4.3.2.1
Low air pressure alarms	Quarterly	13.4.3.2.10
Full flow	Annually	13.4.3.2.2
Dry Pipe Valves/ Quick-Opening Devices		
Priming water	Quarterly	13.4.4.2.1
Low air pressure alarm	Quarterly	13.4.4.2.6
Quick-opening devices	Quarterly	13.4.4.2.4
Trip test	Annually	13.4.4.2.2
Full flow trip test	3 years	13.4.4.2.2.2
Pressure Reducing and Relief Valves		
Sprinkler systems	5 years	13.5.1.2
Circulation relief	Annually	13.5.6.1.2
Pressure relief valves	Annually	13.5.6.2.2
Hose connections	5 years	13.5.2.2
Hose racks	5 years	13.5.3.2
Backflow Prevention Assemblies	Annually	13.6.2
Maintenance		
Control Valves	Annually	13.3.4
Preaction/Deluge Valves	Annually	13.4.3.3.2
Dry Pipe Valves/ Quick-Opening Devices	Annually	13.4.4.3.2

Copyright National Fire Protection Association
Provided by IHS under license with NFPA
No reproduction or networking permitted without license from IHS
Not for Resale

13.2 General Provisions.

13.2.1 The property owner shall have manufacturers' literature available to provide specific instructions for inspecting, testing, and maintaining the valves and associated equipment.

13.2.2 All pertinent personnel, departments, authorities having jurisdiction, or agencies shall be notified that testing or maintenance of the valve and associated alarms is to be conducted.

13.2.3* All system valves shall be protected from physical damage and shall be accessible.

13.2.4 Before opening a test or drain valve, it shall be verified that adequate provisions have been made for drainage.

13.2.5* Main Drain Test. A main drain test shall be conducted annually at each water-based fire protection system riser to determine whether there has been a change in the condition of the water supply piping and control valves. *(See also 13.3.3.4.)*

13.2.5.1 Systems where the sole water supply is through a backflow preventer and/or pressure reducing valves, the main drain test of at least one system downstream of the device shall be conducted on a quarterly basis.

13.2.5.2 When there is a 10 percent reduction in full flow pressure when compared to the original acceptance test or previously performed tests, the cause of the reduction shall be identified and corrected if necessary.

13.2.6 Alarm Devices.

13.2.6.1 Mechanical waterflow devices, including but not limited to water motor gongs, shall be tested quarterly.

13.2.6.2 Vane-type and pressure switch–type waterflow devices shall be tested semiannually.

13.2.7 Gauges.

13.2.7.1 Gauges shall be inspected monthly to verify that they are in good condition and that normal pressure is being maintained.

13.2.7.1.1 Where other sections of this standard have different frequency requirements for specific gauges, those requirements shall be used.

13.2.7.2 Gauges shall be replaced every 5 years or tested every 5 years by comparison with a calibrated gauge.

13.2.7.3 Gauges not accurate to within 3 percent of the full scale shall be recalibrated or replaced.

13.2.8 Records. Records shall be maintained in accordance with Section 4.4.

13.3 Control Valves in Water-Based Fire Protection Systems.

13.3.1* Each control valve shall be identified and have a sign indicating the system or portion of the system it controls.

13.3.1.1 Systems that have more than one control valve that must be closed to work on a system shall have a sign on each affected valve referring to the existence and location of other valves.

13.3.1.2* When a normally open valve is closed, the procedures established in Chapter 15 shall be followed.

13.3.1.2.1 When the valve is returned to service, a drain test (either main or sectional drain, as appropriate) shall be conducted to determine that the valve is open.

13.3.1.3 Each normally open valve shall be secured by means of a seal or a lock or shall be electrically supervised in accordance with the applicable NFPA standards.

13.3.1.4 Normally closed valves shall be secured by means of a seal or shall be electrically supervised in accordance with the applicable NFPA standard.

13.3.1.4.1 Sealing or electrical supervision shall not be required for hose valves.

13.3.2 Inspection.

13.3.2.1 All valves shall be inspected weekly.

13.3.2.1.1 Valves secured with locks or supervised in accordance with applicable NFPA standards shall be permitted to be inspected monthly.

13.3.2.1.2 After any alterations or repairs, an inspection shall be made by the property owner to ensure that the system is in service and all valves are in the normal position and properly sealed, locked, or electrically supervised.

13.3.2.2* The valve inspection shall verify that the valves are in the following condition:

(1) In the normal open or closed position
(2)*Properly sealed, locked, or supervised
(3) Accessible
(4) Provided with appropriate wrenches
(5) Free from external leaks
(6) Provided with appropriate identification

13.3.3 Testing.

13.3.3.1 Each control valve shall be operated annually through its full range and returned to its normal position.

13.3.3.2* Post indicator valves shall be opened until spring or torsion is felt in the rod, indicating that the rod has not become detached from the valve.

13.3.3.2.1 This test shall be conducted every time the valve is closed.

13.3.3.3 Post indicator and outside screw and yoke valves shall be backed a one-quarter turn from the fully open position to prevent jamming.

13.3.3.4 A main drain test shall be conducted any time the control valve is closed and reopened at system riser.

13.3.3.5* Supervisory Switches.

13.3.3.5.1 Valve supervisory switches shall be tested semiannually.

13.3.3.5.2 A distinctive signal shall indicate movement from the valve's normal position during either the first two revolutions of a hand wheel or when the stem of the valve has moved one-fifth of the distance from its normal position.

13.3.3.5.3 The signal shall not be restored at any valve position except the normal position.

13.3.4 Maintenance.

13.3.4.1 The operating stems of outside screw and yoke valves shall be lubricated annually.

13.3.4.2 The valve then shall be completely closed and reopened to test its operation and distribute the lubricant.

Copyright National Fire Protection Association
Provided by IHS under license with NFPA
No reproduction or networking permitted without license from IHS
Not for Resale

13.4 System Valves.

13.4.1 Inspection of Alarm Valves. Alarm valves shall be inspected as described in 13.4.1.1 and 13.4.1.2.

13.4.1.1* Alarm valves and system riser check valves shall be externally inspected monthly and shall verify the following:

(1) The gauges indicate normal supply water pressure is being maintained.
(2) The valve is free of physical damage.
(3) All valves are in the appropriate open or closed position.
(4) The retarding chamber or alarm drains are not leaking.

13.4.1.2* Alarm valves and their associated strainers, filters, and restriction orifices shall be inspected internally every 5 years unless tests indicate a greater frequency is necessary.

13.4.1.3 Maintenance.

13.4.1.3.1 Internal components shall be cleaned/repaired as necessary in accordance with the manufacturer's instructions.

13.4.1.3.2 The system shall be returned to service in accordance with the manufacturer's instructions.

13.4.2 Check Valves.

13.4.2.1 Inspection. Valves shall be inspected internally every 5 years to verify that all components operate correctly, move freely, and are in good condition.

13.4.2.2 Maintenance. Internal components shall be cleaned, repaired, or replaced as necessary in accordance with the manufacturer's instructions.

13.4.3 Preaction Valves and Deluge Valves.

13.4.3.1 Inspection.

13.4.3.1.1 Valve enclosure heating equipment for preaction and deluge valves subject to freezing shall be inspected daily during cold weather for its ability to maintain a minimum temperature of at least 40°F (4.4°C).

13.4.3.1.1.1 Valve enclosures equipped with low temperature alarms shall be inspected weekly.

13.4.3.1.2 Low temperature alarms, if installed in valve enclosures, shall be inspected annually at the beginning of the heating season.

13.4.3.1.3 Gauges shall be inspected weekly.

13.4.3.1.3.1 The gauge on the supply side of the preaction or deluge valve shall indicate that the normal supply water pressure is being maintained.

13.4.3.1.4 The gauge monitoring the preaction system supervisory air pressure, if provided, shall be inspected monthly to verify that it indicates that normal pressure is being maintained.

13.4.3.1.5 The gauge monitoring the detection system pressure, if provided, shall be tested monthly to verify that it indicates that normal pressure is being maintained.

13.4.3.1.6 The preaction or deluge valve shall be externally inspected monthly to verify the following:

(1) The valve is free from physical damage.
(2) All trim valves are in the appropriate open or closed position.
(3) The valve seat is not leaking.
(4) Electrical components are in service.

13.4.3.1.7 The interior of the preaction or deluge valve and the condition of detection devices shall be inspected annually when the trip test is conducted.

13.4.3.1.7.1 Internal inspection of valves that can be reset without removal of a faceplate shall be permitted to be conducted every 5 years.

13.4.3.1.8 Strainers, filters, restricted orifices, and diaphragm chambers shall be inspected internally every 5 years unless tests indicate a greater frequency is necessary.

13.4.3.2 Testing.

13.4.3.2.1* The priming water level in supervised preaction systems shall be tested quarterly for compliance with the manufacturer's instructions.

13.4.3.2.2* Each deluge valve shall be trip tested annually at full flow in warm weather and in accordance with the manufacturer's instructions. Protection shall be provided for any devices or equipment subject to damage by system discharge during tests.

13.4.3.2.2.1* Where the nature of the protected property is such that water cannot be discharged for test purposes, the trip test shall be conducted in a manner that does not necessitate discharge in the protected area.

13.4.3.2.2.2 Where the nature of the protected property is such that water cannot be discharged unless protected equipment is shut down (e.g., energized electrical equipment), a full flow system test shall be conducted at the next scheduled shutdown. In all cases, the test frequency shall not exceed 3 years.

13.4.3.2.2.3 The water discharge patterns from all of the open spray nozzles or sprinklers shall be observed to ensure that patterns are not impeded by plugged nozzles, that nozzles are correctly positioned, and that obstructions do not prevent discharge patterns from wetting surfaces to be protected.

(A) Where the nature of the protected property is such that water cannot be discharged, the nozzles or open sprinklers shall be inspected for proper orientation and the system tested with air to ensure that the nozzles are not obstructed.

(B) Where obstructions occur, the piping and sprinklers or nozzles shall be cleaned and the system retested.

13.4.3.2.3 Except for preaction systems covered by 13.4.3.2.5, every 3 years the preaction valve shall be trip tested with the control valve fully open.

13.4.3.2.4 During those years when full flow testing in accordance with 13.4.3.2.3 is required, the preaction valve shall be trip tested with the control valve partially open.

13.4.3.2.5 Preaction or deluge valves protecting freezers shall be trip tested in a manner that does not introduce moisture into the piping in the freezer.

13.4.3.2.6 Pressure Readings.

13.4.3.2.6.1 Pressure readings shall be recorded at the hydraulically most remote nozzle or sprinkler.

13.4.3.2.6.2 A second pressure reading shall be recorded at the deluge valve.

13.4.3.2.6.3 These readings shall be compared to the hydraulic design pressures to ensure the original system design requirements are met by the water supply.

Copyright National Fire Protection Association
Provided by IHS under license with NFPA
No reproduction or networking permitted without license from IHS
Not for Resale

13.4.3.2.6.4 Where the hydraulically most remote nozzle or sprinkler is inaccessible, nozzles or sprinklers in other than foam-water systems shall be permitted to be checked visually without taking a pressure reading on the most remote nozzle or sprinkler.

13.4.3.2.6.5 Where the reading taken at the riser indicates that the water supply has deteriorated, a gauge shall be placed on the hydraulically most remote nozzle or sprinkler and the results compared with the required design pressure.

13.4.3.2.7 Multiple Systems. The maximum number of systems expected to operate in case of fire shall be tested simultaneously to check the adequacy of the water supply.

13.4.3.2.8 Manual Operation. Manual actuation devices shall be operated annually.

13.4.3.2.9 Return to Service. After the full flow test, the system shall be returned to service in accordance with the manufacturer's instructions.

13.4.3.2.10 Grease or other sealing materials shall not be applied to the seating surfaces of preaction or deluge valves.

13.4.3.2.11* Records indicating the date the preaction or deluge valve was last tripped and the tripping time, as well as the individual and organization conducting the test, shall be maintained at a location or in a manner readily available for review by the authority having jurisdiction.

13.4.3.2.12 Low air pressure alarms, if provided, shall be tested quarterly in accordance with the manufacturer's instructions.

13.4.3.2.13 Low temperature alarms, if installed in valve enclosures, shall be tested annually at the beginning of the heating season.

13.4.3.2.14 Automatic air pressure maintenance devices, if provided, shall be tested yearly at the time of the annual preaction or deluge valve trip test, in accordance with the manufacturer's instructions.

13.4.3.3 Maintenance.

13.4.3.3.1 Leaks causing drops in supervisory pressure sufficient to sound warning alarms, and electrical malfunctions causing alarms to sound, shall be located and repaired.

13.4.3.3.2 During the annual trip test, the interior of the preaction or deluge valve shall be cleaned thoroughly and the parts replaced or repaired as necessary.

13.4.3.3.2.1 Interior cleaning and parts replacement or repair shall be permitted every 5 years for valves that can be reset without removal of a faceplate.

13.4.3.3.3* Auxiliary drains in preaction or deluge systems shall be operated after each system operation and before the onset of freezing conditions.

13.4.3.3.4 Additional maintenance as required by the manufacturer's instructions shall be provided.

13.4.4 Dry Pipe Valves/Quick-Opening Devices.

13.4.4.1 Inspection.

13.4.4.1.1 Valve enclosure heating equipment shall be inspected daily during cold weather for its ability to maintain a minimum temperature of at least 40°F (4°C).

13.4.4.1.1.1 Valve enclosures equipped with low temperature alarms shall be inspected weekly.

13.4.4.1.1.2 Low temperature alarms, if installed in valve enclosures, shall be inspected annually at the beginning of the heating season.

13.4.4.1.2 Gauges shall be inspected weekly.

13.4.4.1.2.1 The gauge on the supply side of the dry pipe valve shall indicate that the normal supply water pressure is being maintained.

13.4.4.1.2.2 The gauge on the system side of the dry pipe valve shall indicate that the proper ratio of air or nitrogen pressure to water supply pressure is being maintained in accordance with the manufacturer's instructions.

13.4.4.1.2.3* The gauge on the quick-opening device, if provided, shall indicate the same pressure as the gauge on the system side of the dry pipe valve.

13.4.4.1.3 Systems with auxiliary drains shall require a sign at the dry or preaction valve indicating the number of auxiliary drains and location of each individual drain.

13.4.4.1.4 The dry pipe valve shall be externally inspected monthly to verify the following:

(1) The valve is free of physical damage.
(2) All trim valves are in the appropriate open or closed position.
(3) The intermediate chamber is not leaking.

13.4.4.1.5 The interior of the dry pipe valve shall be inspected annually when the trip test is conducted.

13.4.4.1.6 Strainers, filters, and restricted orifices shall be inspected internally every 5 years unless tests indicate a greater frequency is necessary.

13.4.4.2 Testing.

13.4.4.2.1* The priming water level shall be tested quarterly.

13.4.4.2.2* Each dry pipe valve shall be trip tested annually during warm weather.

13.4.4.2.2.1 Dry pipe valves protecting freezers shall be trip tested in a manner that does not introduce moisture into the piping in the freezers.

13.4.4.2.2.2* Every 3 years and whenever the system is altered, the dry pipe valve shall be trip tested with the control valve fully open and the quick-opening device, if provided, in service.

13.4.4.2.2.3* During those years when full flow testing in accordance with 13.4.4.2.2.2 is not required, each dry pipe valve shall be trip tested with the control valve partially open.

13.4.4.2.3 Grease or other sealing materials shall not be applied to the seating surfaces of dry pipe valves.

13.4.4.2.4* Quick-opening devices, if provided, shall be tested quarterly.

13.4.4.2.5 A tag or card that shows the date on which the dry pipe valve was last tripped, and the name of the person and organization conducting the test, shall be attached to the valve.

13.4.4.2.5.1 Separate records of initial air and water pressure, tripping air pressure, and dry pipe valve operating conditions shall be maintained on the premises for comparison with previous test results.

--`,,```,,,,````-`-`,,`,,`,`,,`---
Copyright National Fire Protection Association
Provided by IHS under license with NFPA
No reproduction or networking permitted without license from IHS
Not for Resale

13.4.4.2.5.2 Records of tripping time shall be maintained for full flow trip tests.

13.4.4.2.6 Low air pressure alarms, if provided, shall be tested quarterly in accordance with the manufacturer's instructions.

13.4.4.2.7 Low temperature alarms, if installed in valve enclosures, shall be tested annually at the beginning of the heating season.

13.4.4.2.8 Automatic air pressure maintenance devices, if provided, shall be tested annually during the dry pipe valve trip test in accordance with the manufacturer's instructions.

13.4.4.2.9 Dry pipe systems shall be tested once every three years for air leakage, using one of the following test methods:

(1) A pressure test at 40 psi for two hours. The system shall be permitted to lose up to 3 psi (0.2 bar) during the duration of the test. Air leaks shall be addressed if the system loses more than 3 psi (0.2 bar) during this test.
(2) With the system at normal system pressure, shut off the air source (compressor or shop air) for 4 hours. If the low air pressure alarm goes off within this period, the air leaks shall be addressed.

13.4.4.3 Maintenance.

13.4.4.3.1 During the annual trip test, the interior of the dry pipe valve shall be cleaned thoroughly, and parts replaced or repaired as necessary.

13.4.4.3.2* Auxiliary drains in dry pipe sprinkler systems shall be drained after each operation of the system, before the onset of freezing weather conditions, and thereafter as needed.

13.5 Pressure Reducing Valves and Relief Valves.

13.5.1 Inspection and Testing of Sprinkler Pressure Reducing Valves. Sprinkler pressure reducing valves shall be inspected and tested as described in 13.5.1.1 and 13.5.1.2.

13.5.1.1 All valves shall be inspected quarterly to verify that the valves are in the following condition:

(1) In the open position
(2) Not leaking
(3) Maintaining downstream pressures in accordance with the design criteria
(4) In good condition, with handwheels installed and unbroken

13.5.1.2* A full flow test shall be conducted on each valve at 5-year intervals and shall be compared to previous test results.

13.5.1.2.1 Adjustments shall be made in accordance with the manufacturer's instructions.

13.5.1.3 A partial flow test adequate to move the valve from its seat shall be conducted annually.

13.5.2 Hose Connection Pressure Reducing Valves.

13.5.2.1 All valves shall be inspected annually to verify the following:

(1) The handwheel is not broken or missing.
(2) The outlet hose threads are not damaged.
(3) No leaks are present.
(4) The reducer and the cap are not missing.

13.5.2.2* A full flow test shall be conducted on each valve at 5-year intervals and shall be compared to previous test results.

13.5.2.2.1 Adjustments shall be made in accordance with the manufacturer's instructions.

13.5.2.3 A partial flow test adequate to move the valve from its seat shall be conducted annually.

13.5.3 Hose Rack Assembly Pressure Reducing Valves.

13.5.3.1 All valves shall be inspected annually to verify the following:

(1) The handwheel is not missing or broken.
(2) No leaks are present.

13.5.3.2 A full flow test shall be conducted on each valve at 5-year intervals and compared to previous test results.

13.5.3.2.1 Adjustments shall be made in accordance with the manufacturer's instructions.

13.5.3.3 A partial flow test adequate to move the valve from its seat shall be conducted annually.

13.5.4 Master Pressure Reducing Valves.

13.5.4.1* Valves shall be inspected weekly to verify that the valves are in the following condition:

(1)*The downstream pressures are maintained in accordance with the design criteria.
(2) The supply pressure is in accordance with the design criteria.
(3) The valves are not leaking.
(4) The valve and trim are in good condition.

13.5.4.2* A partial flow test adequate to move the valve from its seat shall be conducted quarterly.

13.5.4.3* A full flow test shall be conducted on each valve annually and shall be compared to previous test results.

13.5.4.4 When valve adjustments are necessary, they shall be made in accordance with the manufacturer's instructions.

13.5.5 Pressure Reducing Valves.

13.5.5.1 All pressure reducing valves installed on fire protection systems not covered by 13.5.1, 13.5.2, 13.5.3, or 13.5.4 shall be inspected in accordance with 13.5.1.1.

13.5.5.2 All pressure reducing valves installed on fire protection systems not covered by 13.5.1, 13.5.2, 13.5.3, or 13.5.4 shall be tested in accordance with 13.5.1.2.

13.5.6 Hose Valves.

13.5.6.1 Inspection.

13.5.6.1.1 Hose valves shall be inspected quarterly.

13.5.6.1.2 Hose valves shall be inspected to ensure that hose caps are in place and not damaged.

13.5.6.1.3 Hose threads shall be inspected for damage.

13.5.6.1.4 Valve handles shall be present and not damaged.

13.5.6.1.5 Gaskets shall be inspected for damage or deterioration.

13.5.6.1.6 Hose valves shall be inspected for leaks.

13.5.6.1.7 Hose valves shall be inspected to ensure no obstructions are present.

13.5.6.1.8 Hose valves shall be inspected to ensure that restricting devices are present.

Copyright National Fire Protection Association
Provided by IHS under license with NFPA
No reproduction or networking permitted without license from IHS
Not for Resale

13.5.6.2 Testing.

13.5.6.2.1* Class I and Class III standpipe system hose valves shall be tested annually by opening and closing the valves.

13.5.6.2.1.1 Hose valves that are difficult to operate or leak shall be repaired or replaced.

13.5.6.2.2* Hose valves on hose stations attached to sprinkler systems and Class II standpipe systems shall be tested every 3 years by opening and closing the valves.

13.5.6.2.2.1 Hose valves that are difficult to operate or that leak shall be repaired or replaced.

13.5.6.3 Maintenance. Hose valves that do not operate smoothly or open fully shall be lubricated, repaired, or replaced.

13.5.7 Fire Pump Pressure Relief Valves.

13.5.7.1 All circulation relief valves shall be inspected weekly.

13.5.7.1.1 The inspection shall verify that water flows through the valve when the fire pump is operating at shutoff pressure (i.e., churn), to prevent the pump from overheating.

13.5.7.1.2 During the annual fire pump test, the closure of the circulation relief valve shall be verified to be in accordance with the manufacturer's specifications.

13.5.7.2 All pressure relief valves shall be inspected weekly.

13.5.7.2.1 The inspection shall verify that the pressure downstream of the relief valve fittings in the fire pump discharge piping does not exceed the pressure for which the system components are rated.

13.5.7.2.2 During the annual fire pump flow test, the pressure relief valve shall be verified to be correctly adjusted and set to relieve at the correct pressure and to close below that pressure setting.

13.5.8 Maintenance. All damaged or missing components noted during the inspections specified in 13.5.6.1 through 13.5.6.2.2 shall be repaired or replaced in accordance with the manufacturer's instructions.

13.6 Backflow Prevention Assemblies.

13.6.1 Inspection. Inspection of backflow prevention assemblies shall be as described in 13.6.1.1 through 13.6.1.2.2.

13.6.1.1 The double check assembly (DCA) valves and double check detector assembly (DCDA) valves shall be inspected weekly to ensure that the OS&Y isolation valves are in the normal open position.

13.6.1.1.1 Valves secured with locks or electrically supervised in accordance with applicable NFPA standards shall be inspected monthly.

13.6.1.2* Reduced pressure assemblies (RPA) and reduced pressure detector assemblies (RPDA) shall be inspected weekly to ensure that the differential-sensing valve relief port is not continuously discharging and the OS&Y isolation valves are in the normal open position.

13.6.1.2.1 Valves secured with locks or electrically supervised in accordance with applicable NFPA standards shall be inspected monthly.

13.6.1.2.2 After any testing or repair, an inspection by the property owner shall be made to ensure that the system is in service and all isolation valves are in the normal open position and properly locked or electrically supervised.

13.6.2 Testing.

13.6.2.1* All backflow preventers installed in fire protection system piping shall be tested annually in accordance with the following:

(1) A forward flow test shall be conducted at the designed flow rate, including hose stream demand, of the system, where hydrants or inside hose stations are located downstream of the backflow preventer.
(2) A backflow performance test, as required by the authority having jurisdiction, shall be conducted at the completion of the forward flow test.

13.6.2.1.1 For backflow preventers sized 2 in. (50 mm) and under, the forward flow test shall be acceptable to conduct without measuring flow, where the test outlet is of a size to flow the system demand.

13.6.2.1.2 Where water rationing is enforced during shortages lasting more than 1 year, an internal inspection of the backflow preventer to ensure the check valves will fully open shall be acceptable in lieu of conducting the annual forward flow test.

13.6.2.1.3 Where connections do not permit a full flow test, tests shall be completed at the maximum flow rate possible.

13.6.2.1.4 The forward flow test shall not be required where annual fire pump testing causes the system demand to flow through the backflow preventer device.

13.6.2.2 Where connections do not permit a full flow test, tests shall be conducted at the maximum flow rate possible.

13.6.3 Maintenance.

13.6.3.1 Maintenance of all backflow prevention assemblies shall be conducted by a trained individual following the manufacturer's instructions in accordance with the procedure and policies of the authority having jurisdiction.

13.6.3.2 Rubber parts shall be replaced in accordance with the frequency required by the authority having jurisdiction and the manufacturer's instructions.

13.7 Fire Department Connections.

13.7.1 Fire department connections shall be inspected quarterly. The inspection shall verify the following:

(1) The fire department connections are visible and accessible.
(2) Couplings or swivels are not damaged and rotate smoothly.
(3) Plugs or caps are in place and undamaged.
(4) Gaskets are in place and in good condition.
(5) Identification signs are in place.
(6) The check valve is not leaking.
(7) The automatic drain valve is in place and operating properly.
(8) The fire department connection clapper(s) is in place and operating properly.

13.7.2 If fire department connection plugs or caps are not in place, the interior of the connection shall be inspected for obstructions, and it shall be verified that the fire department connection clapper is operational over its full range.

13.7.3 Components shall be repaired or replaced as necessary in accordance with the manufacturer's instructions. Any obstructions that are present shall be removed.

Copyright National Fire Protection Association
Provided by IHS under license with NFPA
No reproduction or networking permitted without license from IHS
Not for Resale

Chapter 14 Obstruction Investigation

14.1 General. This chapter shall provide the minimum requirements for conducting investigations of fire protection system piping for possible sources of materials that could cause pipe blockage.

14.2* Obstruction Investigation and Prevention.

14.2.1 An inspection of piping and branch line conditions shall be conducted every 5 years by opening a flushing connection at the end of one main and by removing a sprinkler toward the end of one branch line for the purpose of inspecting for the presence of foreign organic and inorganic material.

14.2.1.1 Alternative nondestructive examination methods shall be permitted.

14.2.1.2 Tubercules or slime, if found, shall be tested for indications of microbiologically influenced corrosion (MIC).

14.2.2* An obstruction investigation shall be conducted for system or yard main piping wherever any of the following conditions exist:

(1) Defective intake for fire pumps taking suction from open bodies of water
(2) The discharge of obstructive material during routine water tests
(3) Foreign materials in fire pumps, in dry pipe valves, or in check valves
(4) Foreign material in water during drain tests or plugging of inspector's test connection(s)
(5) Plugged sprinklers
(6) Plugged piping in sprinkler systems dismantled during building alterations
(7) Failure to flush yard piping or surrounding public mains following new installations or repairs
(8) A record of broken public mains in the vicinity
(9) Abnormally frequent false tripping of a dry pipe valve(s)
(10) A system that is returned to service after an extended shutdown (greater than 1 year)
(11) There is reason to believe that the sprinkler system contains sodium silicate or highly corrosive fluxes in copper systems
(12) A system has been supplied with raw water via the fire department connection
(13) Pinhole leaks
(14) A 50 percent increase in the time it takes water to travel to the inspector's test connection from the time the valve trips during a full flow trip test of a dry pipe sprinkler system when compared to the original system acceptance test

14.2.3* Systems shall be examined for internal obstructions where conditions exist that could cause obstructed piping.

14.2.3.1 If the condition has not been corrected or the condition is one that could result in obstruction of the piping despite any previous flushing procedures that have been performed, the system shall be examined for internal obstructions every 5 years.

14.2.3.2 Internal inspections shall be accomplished by examining the interior of the following four points:

(1) System valve
(2) Riser
(3) Cross main
(4) Branch line

14.2.3.3 Alternative nondestructive examination methods shall be permitted.

14.2.4* If an obstruction investigation carried out in accordance with 14.2.1 indicates the presence of sufficient material to obstruct sprinklers, a complete flushing program shall be conducted by qualified personnel.

14.3 Ice Obstruction. Dry pipe or preaction sprinkler system piping that protects or passes through freezers or cold storage rooms shall be inspected internally on an annual basis for ice obstructions at the point where the piping enters the refrigerated area.

14.3.1 Alternative nondestructive examinations shall be permitted.

14.3.2 All penetrations into the cold storage areas shall be inspected and, if an ice obstruction is found, additional pipe shall be examined to ensure no ice blockage exists.

Chapter 15 Impairments

15.1 General. This chapter shall provide the minimum requirements for a water-based fire protection system impairment program. Measures shall be taken during the impairment to ensure that increased risks are minimized and the duration of the impairment is limited.

15.2 Impairment Coordinator.

15.2.1 The property owner shall assign an impairment coordinator to comply with the requirements of this chapter.

15.2.2 In the absence of a specific designee, the property owner shall be considered the impairment coordinator.

15.2.3 Where the lease, written use agreement, or management contract specifically grants the authority for inspection, testing, and maintenance of the fire protection system(s) to the tenant, management firm, or managing individual, the tenant, management firm, or managing individual shall assign a person as impairment coordinator.

15.3 Tag Impairment System.

15.3.1* A tag shall be used to indicate that a system, or part thereof, has been removed from service.

15.3.2* The tag shall be posted at each fire department connection and system control valve, indicating which system, or part thereof, has been removed from service.

15.3.3 The authority having jurisdiction shall specify where the tag is to be placed.

15.4 Impaired Equipment.

15.4.1 The impaired equipment shall be considered to be the water-based fire protection system, or part thereof, that is removed from service.

15.4.2 The impaired equipment shall include, but shall not be limited to, the following:

(1) Sprinkler systems
(2) Standpipe systems
(3) Fire hose systems
(4) Underground fire service mains
(5) Fire pumps
(6) Water storage tanks

Copyright National Fire Protection Association
Provided by IHS under license with NFPA
No reproduction or networking permitted without license from IHS
Not for Resale

(7) Water spray fixed systems
(8) Foam-water systems
(9) Fire service control valves

15.5* Preplanned Impairment Programs.

15.5.1 All preplanned impairments shall be authorized by the impairment coordinator.

15.5.2 Before authorization is given, the impairment coordinator shall be responsible for verifying that the following procedures have been implemented:

(1) The extent and expected duration of the impairment have been determined.
(2) The areas or buildings involved have been inspected and the increased risks determined.
(3) Recommendations have been submitted to management or the property owner/manager. Where a required fire protection system is out of service for more than 10 hours in a 24-hour period, the impairment coordinator shall arrange for one of the following:
   (a) Evacuation of the building or portion of the building affected by the system out of service
   (b)*An approved fire watch
   (c)*Establishment of a temporary water supply
   (d)*Establishment and implementation of an approved program to eliminate potential ignition sources and limit the amount of fuel available to the fire
(4) The fire department has been notified.
(5) The insurance carrier, the alarm company, property owner/manager, and other authorities having jurisdiction have been notified.
(6) The supervisors in the areas to be affected have been notified.
(7) A tag impairment system has been implemented. *(See Section 15.3.)*
(8) All necessary tools and materials have been assembled on the impairment site.

15.6 Emergency Impairments.

15.6.1 Emergency impairments include but are not limited to system leakage, interruption of water supply, frozen or ruptured piping, and equipment failure.

15.6.2 When emergency impairments occur, emergency action shall be taken to minimize potential injury and damage.

15.6.3 The coordinator shall implement the steps outlined in Section 15.5.

15.7 Restoring Systems to Service. When all impaired equipment is restored to normal working order, the impairment coordinator shall verify that the following procedures have been implemented:

(1) Any necessary inspections and tests have been conducted to verify that affected systems are operational. The appropriate chapter of this standard shall be consulted for guidance on the type of inspection and test required.
(2) Supervisors have been advised that protection is restored.
(3) The fire department has been advised that protection is restored.
(4) The property owner/manager, insurance carrier, alarm company, and other authorities having jurisdiction have been advised that protection is restored.
(5) The impairment tag has been removed.

Annex A Explanatory Material

Annex A is not a part of the requirements of this NFPA document but is included for informational purposes only. This annex contains explanatory material, numbered to correspond with the applicable text paragraphs.

A.1.1 Generally accepted NFPA installation practices for water-based fire protection systems relevant to this standard are found in the following:

NFPA 13, *Standard for the Installation of Sprinkler Systems.*

NFPA 13R, *Standard for the Installation of Sprinkler Systems in Residential Occupancies up to and Including Four Stories in Height.*

NFPA 14, *Standard for the Installation of Standpipe and Hose Systems.*

NFPA 15, *Standard for Water Spray Fixed Systems for Fire Protection.*

NFPA 16, *Standard for the Installation of Foam-Water Sprinkler and Foam-Water Spray Systems.*

NFPA 20, *Standard for the Installation of Stationary Pumps for Fire Protection.*

NFPA 22, *Standard for Water Tanks for Private Fire Protection.*

NFPA 24, *Standard for the Installation of Private Fire Service Mains and Their Appurtenances.*

NFPA 750, *Standard on Water Mist Fire Protection Systems.*

For systems originally installed in accordance with one of these standards, the repair, replacement, alteration or extension of such systems should also be performed in accordance with that same standard. When original installations are based on other applicable codes or standards, repair, replacement, alteration, or extension practices should be conducted in accordance with those other applicable codes or standards.

A.1.2 History has shown that the performance reliability of a water-based fire protection system under fire-related conditions increases where comprehensive inspection, testing, and maintenance procedures are enforced. Diligence during an inspection is important. The inspection, testing, and maintenance of some items in the standard might not be practical or possible, depending on existing conditions. The inspector should use good judgment when making inspections.

A.1.3 An entire program of quality control includes, but is not limited to, maintenance of equipment, inspection frequency, testing of equipment, on-site fire brigades, loss control provisions, and personnel training. Personnel training can be used as an alternative even if a specific frequency differs from that specified in this standard.

A.1.4 The liter and bar units, which are not part of but are recognized by SI, commonly are used in international fire protection. These units are provided in Table A.1.4 with their conversion factors.

A.3.2.1 Approved. The National Fire Protection Association does not approve, inspect, or certify any installations, procedures, equipment, or materials; nor does it approve or evaluate testing laboratories. In determining the acceptability of installations, procedures, equipment, or materials, the authority having jurisdiction may base acceptance on compliance with NFPA or other appropriate standards. In the absence of such standards, said authority may require evidence of proper installation, procedure, or use. The authority having jurisdiction may also refer to the listings or labeling practices of an organization that is concerned with product evaluations and is thus in a position to determine compliance with appropriate standards for the current production of listed items.

Copyright National Fire Protection Association
Provided by IHS under license with NFPA
No reproduction or networking permitted without license from IHS
Not for Resale

Table A.1.4 Metric Conversions

Name of Unit	Unit Symbol	Conversion Factor
liter	L	1 gal = 3.785 L
liter per minute per square meter	$L/min \cdot m^2$	1 gpm/ft^2 = 40.746 $L/min \cdot m^2$
cubic decimeter	dm^3	1 gal = 3.785 dm^3
pascal	Pa	1 psi = 6894.757 Pa
bar	bar	1 psi = 0.0689 bar
bar	bar	1 bar = 10^5 Pa

Note: For additional conversions and information, see IEEE/ASTM-SI-10, *American National Standard for Use of the International System of Units (SI): The Modern Metric System.*

A.3.2.2 Authority Having Jurisdiction (AHJ). The phrase "authority having jurisdiction," or its acronym AHJ, is used in NFPA documents in a broad manner, since jurisdictions and approval agencies vary, as do their responsibilities. Where public safety is primary, the authority having jurisdiction may be a federal, state, local, or other regional department or individual such as a fire chief; fire marshal; chief of a fire prevention bureau, labor department, or health department; building official; electrical inspector; or others having statutory authority. For insurance purposes, an insurance inspection department, rating bureau, or other insurance company representative may be the authority having jurisdiction. In many circumstances, the property owner or his or her designated agent assumes the role of the authority having jurisdiction; at government installations, the commanding officer or departmental official may be the authority having jurisdiction.

A.3.2.3 Listed. The means for identifying listed equipment may vary for each organization concerned with product evaluation; some organizations do not recognize equipment as listed unless it is also labeled. The authority having jurisdiction should utilize the system employed by the listing organization to identify a listed product.

A.3.3.2 Automatic Detection Equipment. Water spray systems can use fixed temperature, rate-of-rise, rate-compensation fixed temperature, optical devices, flammable gas detectors, or products of combustion detectors.

A.3.3.9 Fire Hydrant. See Figure A.3.3.9(a) and Figure A.3.3.9(b).

A.3.3.9.1 Dry Barrel Hydrant (Frostproof Hydrant). See Figure A.3.3.9.1.

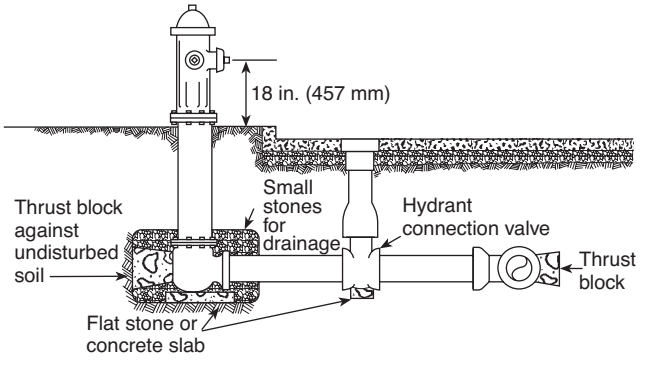

FIGURE A.3.3.9(a) Typical Fire Hydrant Connection.

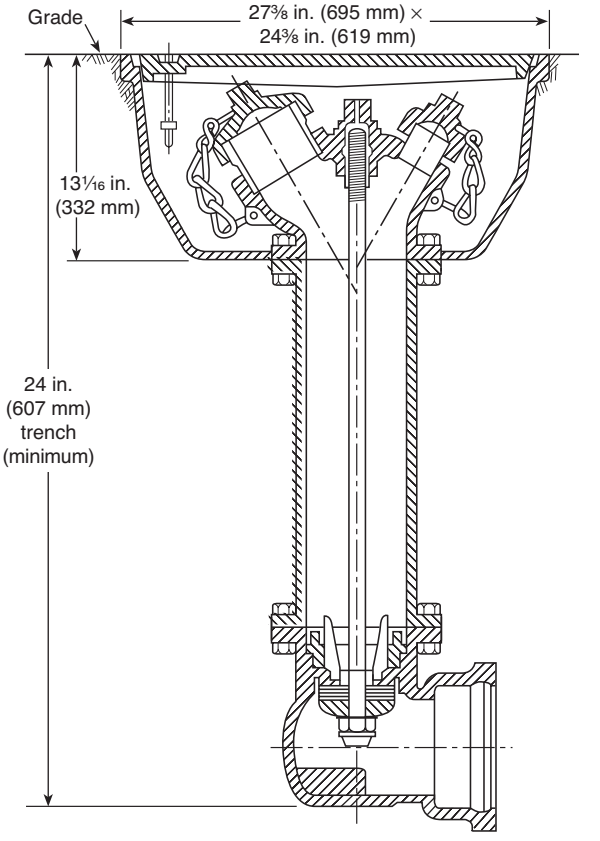

FIGURE A.3.3.9(b) Flush-Type Hydrant.

A.3.3.9.2 Monitor Nozzle Hydrant. See Figure A.3.3.9.2.

A.3.3.9.3 Wall Hydrant. See Figure A.3.3.9.3.

A.3.3.9.4 Wet Barrel Hydrant. See Figure A.3.3.9.4.

A.3.3.10 Foam Concentrate. For the purpose of this document, "foam concentrate" and "concentrate" are used interchangeably.

A.3.3.13 Hose House. See Figure A.3.3.13(a) through Figure A.3.3.13(c).

A.3.3.16.1 Conventional Pin Rack. See Figure A.3.3.16.1.

A.3.3.16.2 Horizontal Rack. See Figure A.3.3.16.2.

A.3.3.16.3 Hose Reel. See Figure A.3.3.16.3.

A.3.3.16.4 Semiautomatic Hose Rack Assembly. See Figure A.3.3.16.4.

A.3.3.17 Impairment. Temporarily shutting down a system as part of performing the routine inspection, testing, and maintenance on that system while under constant attendance by qualified personnel, and where the system can be restored to service quickly, should not be considered an impairment. Good judgment should be considered for the hazards presented.

A.3.3.22.1 Monitor Nozzle. See Figure A.3.3.22.1(a) and Figure A.3.3.22.1(b).

Copyright National Fire Protection Association
Provided by IHS under license with NFPA
No reproduction or networking permitted without license from IHS
Not for Resale

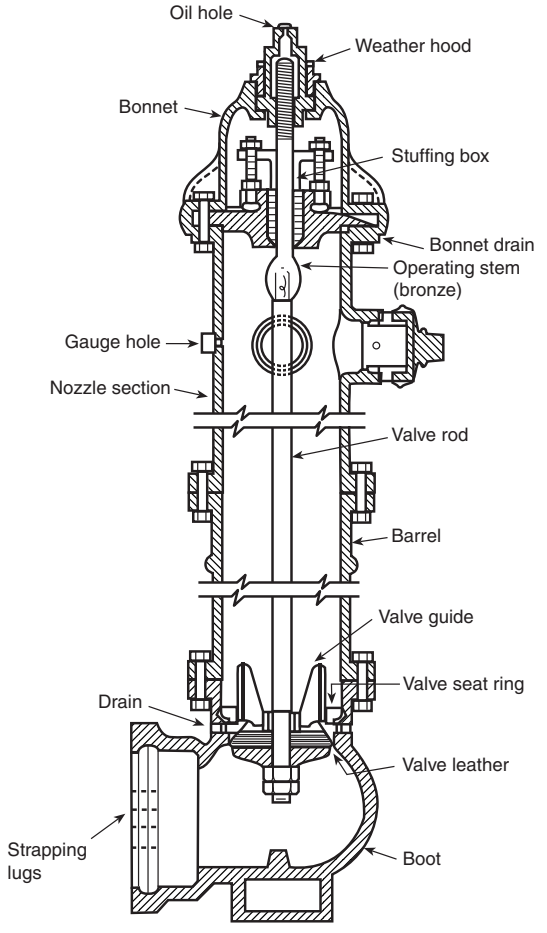

FIGURE A.3.3.9.1 Dry Barrel Hydrant.

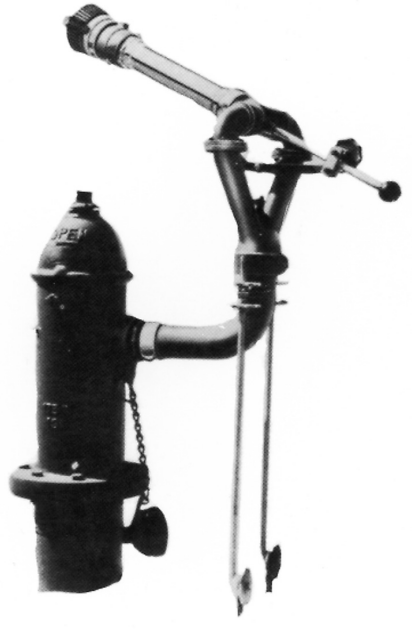

FIGURE A.3.3.9.2 Hydrant with Monitor Nozzle.

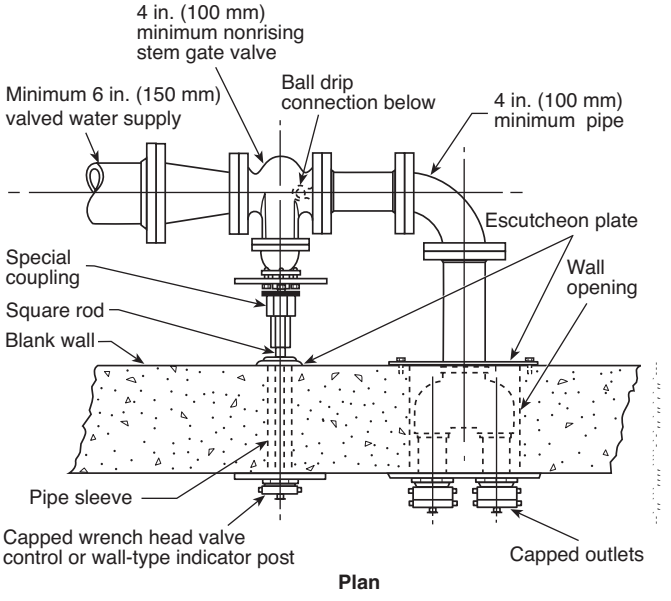

FIGURE A.3.3.9.3 Wall Hydrant.

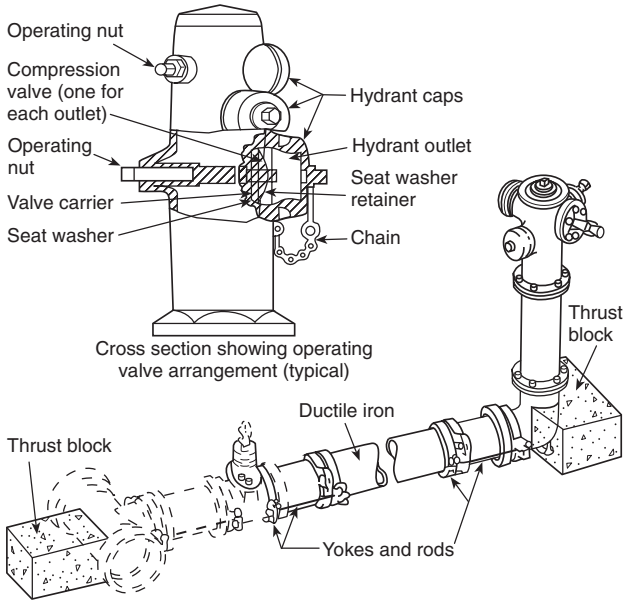

FIGURE A.3.3.9.4 Wet Barrel Hydrant. ***(Courtesy of the Los Angeles Department of Water and Power.)***

A.3.3.22.2 Water Spray Nozzle. The selection of the type and size of spray nozzles should have been made with proper consideration given to such factors as physical character of the hazard involved, draft or wind conditions, material likely to be burning, and the general purpose of the system.

High-velocity spray nozzles, generally used in piped installations, discharge in the form of a spray-filled cone. Low-velocity spray nozzles usually deliver a much finer spray in the form of either a spray-filled spheroid or cone. Due to differences in the size of orifices or waterways in the various nozzles and the range of water particle sizes produced by each type, nozzles of one type

Copyright National Fire Protection Association
Provided by IHS under license with NFPA
No reproduction or networking permitted without license from IHS
Not for Resale

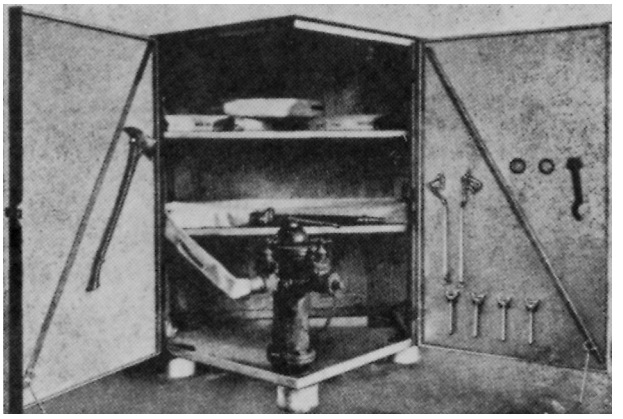

FIGURE A.3.3.13(a) Hose House of Five-Sided Design for Installation over a Private Hydrant.



FIGURE A.3.3.13(b) Steel Hose House of Compact Dimensions for Installation over a Private Hydrant. House is shown closed; top lifts up, and doors on front side open for complete accessibility.

-

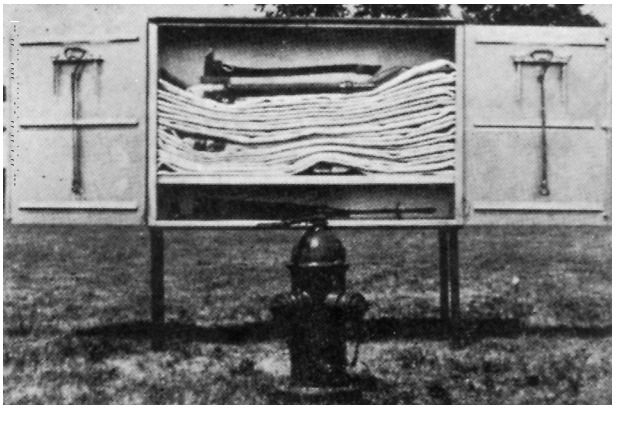

FIGURE A.3.3.13(c) Hose House That Can Be Installed on Legs, As Pictured, or on a Wall Near, but Not Directly over, a Private Hydrant.

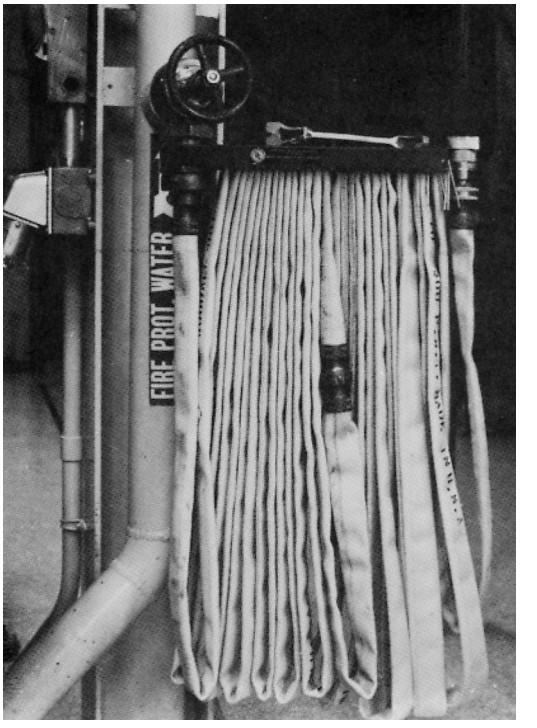

FIGURE A.3.3.16.1 Conventional Pin Rack.

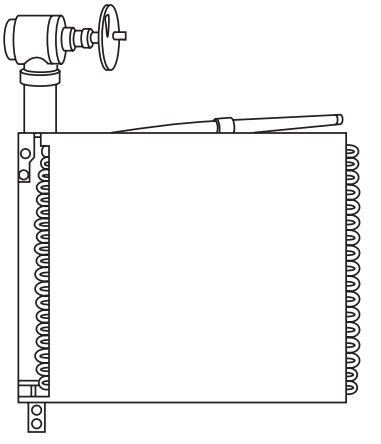

FIGURE A.3.3.16.2 Horizontal Rack.

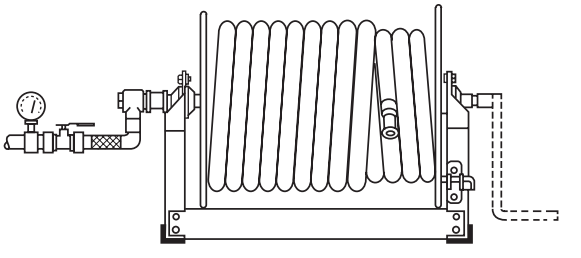

FIGURE A.3.3.16.3 Constant Flow Hose Reel.

Copyright National Fire Protection Association
Provided by IHS under license with NFPA
No reproduction or networking permitted without license from IHS
Not for Resale



FIGURE A.3.3.16.4 Semiautomatic Hose Rack Assembly.

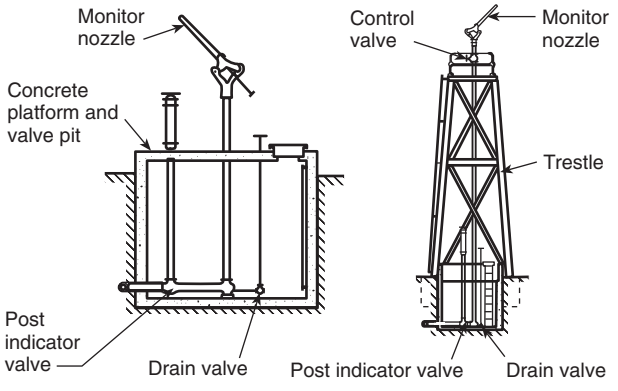

FIGURE A.3.3.22.1(a) Standard Monitor Nozzles; Gear Control Nozzles Also Are Permitted.

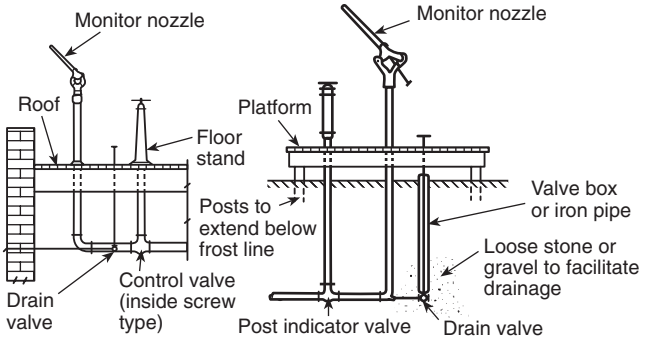

FIGURE A.3.3.22.1(b) Alternative Arrangement of Standard Monitor Nozzles.

cannot ordinarily be substituted for those of another type in an individual installation without seriously affecting fire extinguishment. In general, the higher the velocity and the coarser the size of the water droplets, the greater the effective "reach" or range of the spray.

Another type of water spray nozzle uses the deflector principle of the standard sprinkler. The angle of the spray discharge cones is governed by the design of the deflector. Some manufacturers make spray nozzles of this type individually automatic by constructing them with heat-responsive elements as used in standard automatic sprinklers.

A.3.3.24 Pressure Regulating Device. Examples include pressure reducing valves, pressure control valves, and pressure restricting devices.

A.3.3.26 Pressure Vacuum Vent. See Figure A.3.3.26.

A.3.3.27 Proportioners. See Figure A.3.3.27.

A.3.3.27.1 Bladder Tank Proportioner. See Figure A.3.3.27.1.

A.3.3.27.2 In-Line Balanced Pressure Proportioner. See Figure A.3.3.27.2.

A.3.3.27.3 Line Proportioner. See Figure A.3.3.27.3.

A.3.3.27.4 Standard Balanced Pressure Proportioner. See Figure A.3.3.27.4.

A.3.3.27.5 Standard Pressure Proportioner. See Figure A.3.3.27.5.

A.3.3.31 Standpipe System. This is accomplished by means of connections to water supply systems or by means of pumps, tanks, and other equipment necessary to provide an adequate supply of water to the hose connections.

A.3.3.32 Strainer. There are two types of strainers. Pipeline strainers are used in water supply connections. These are capable of removing from the water all solids of sufficient size to obstruct the spray nozzles [⅛ in. (3.2 mm) perforations usually are suitable]. Pipeline strainer designs should incorporate a flushout connection or should be capable of flushing through the main drain.

Individual strainers for spray nozzles, where needed, are capable of removing from the water all solids of sufficient size to obstruct the spray nozzle that they serve.

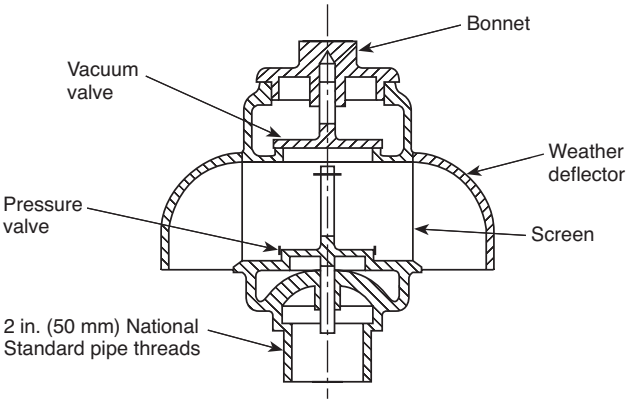

FIGURE A.3.3.26 Pressure Vacuum Vent.

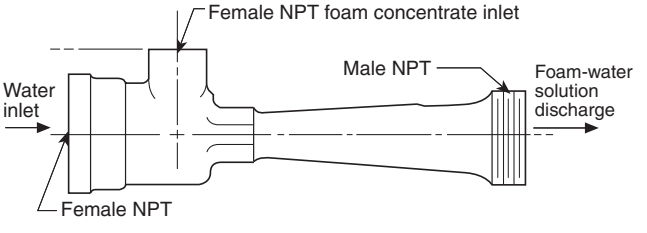

FIGURE A.3.3.27 Proportioner.

Copyright National Fire Protection Association
Provided by IHS under license with NFPA
No reproduction or networking permitted without license from IHS
Not for Resale

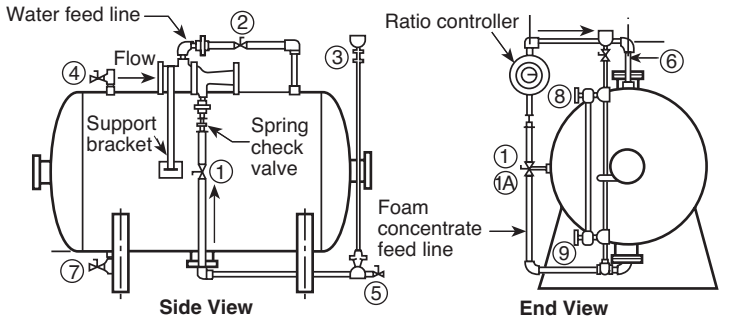

Valve description		Normal position	
Valve no.	Description	Manual system	Auto system
1	Concentrate shutoff	Closed	Closed
1A	Auto. conc. shutoff	N/A	Closed
2	Water pres. shutoff	Open	Open
3	Fill cup shutoff	Closed	Closed
4	Tank water vent	Closed	Closed
5	Diaph. conc. vent	Closed	Closed
6	Water fill	Closed	Closed
7	Concentrate drain/fill	Closed	Closed
8	Upr. sight gauge (opt.)	Closed	Closed
9	Lwr. sight gauge (opt.)	Closed	Closed

FIGURE A.3.3.27.1 Bladder Tank Proportioner.

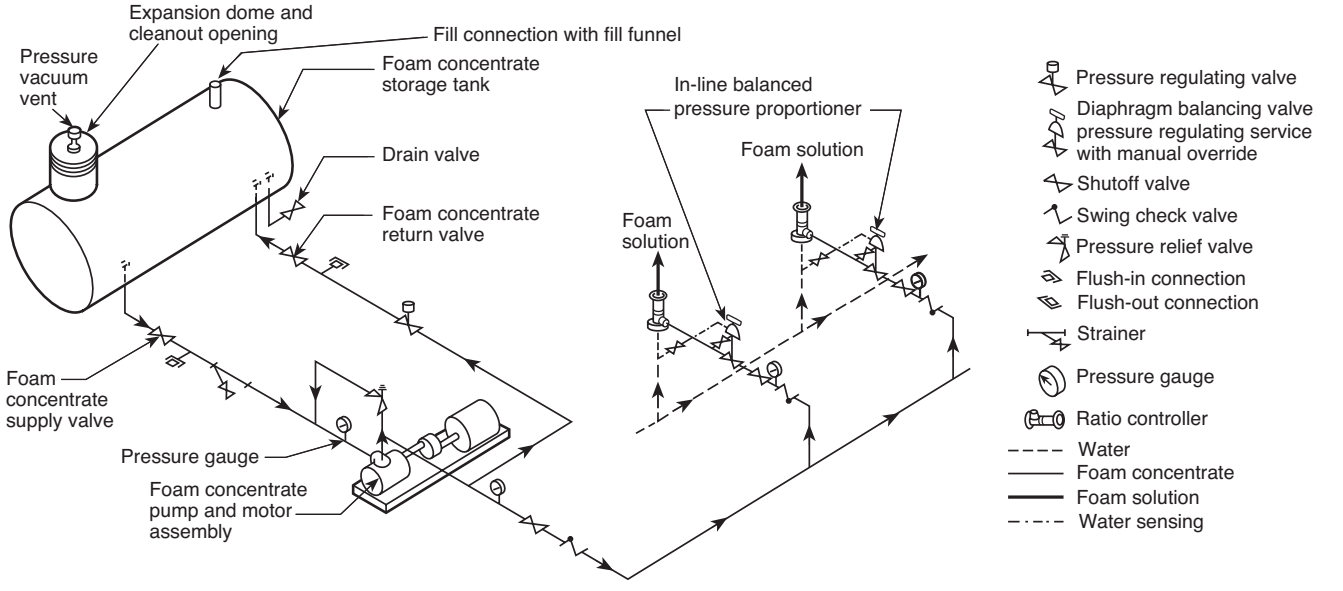

FIGURE A.3.3.27.2 In-Line Balanced Pressure Proportioner.

A.3.3.35 Water Spray. Water spray fixed systems are usually applied to special fire protection problems, since the protection can be specifically designed to provide for fire control, extinguishment, or exposure protection. Water spray fixed systems are permitted to be independent of, or supplementary to, other forms of protection.

A.3.5.1 Control Valve. Experience has shown that closed valves are the primary cause of failure of water-based fire protection systems in protected occupancies.

A.3.5.5.1 Master Pressure Reducing Valve. Master PRVs are typically found downstream of a fire pump's discharge.

A.3.6.3 Private Fire Service Main. See Figure A.3.6.3.

A.3.6.4 Sprinkler System. A sprinkler system is considered to have a single system riser control valve. The design and installation of water supply facilities such as gravity tanks, fire pumps, reservoirs, or pressure tanks are covered by NFPA 20, *Standard for the Installation of Stationary Pumps for Fire Protection,* and NFPA 22, *Standard for Water Tanks for Private Fire Protection.*

A.3.6.4.5 Wet Pipe Sprinkler System. Hose connections [1½ in. (40 mm) hose, valves, and nozzles] supplied by sprinkler system piping are considered components of the sprinkler system.

A.4.1.1 The components are not required to be open or exposed. Doors, removable panels, or valve pits can be permitted to satisfy the need for accessibility. Such equipment should not be obstructed by features such as walls, ducts, columns, direct burial, or stock storage.

A.4.1.2 Inspection, testing, and maintenance can be permitted to be contracted with an inspection, testing, and maintenance service.

A.4.1.4 Recalled products should be replaced or remedied. Remedies include entrance into a program for scheduled replacement. Such replacement or remedial product should be installed in accordance with the manufacturer's instructions and the appropriate NFPA installation standards. A recalled product is a product subject to a statute or administrative regulation specifically requiring the manufacturer, importer, distributor, wholesaler, or retailer of a product, or any combination of such entities, to recall the product, or a product voluntarily recalled by a combination of such entities.

A.4.1.4.1 System deficiencies not explained by normal wear and tear, such as hydraulic shock, can often be indicators of system problems and should be investigated and evaluated by a qualified person or engineer. Failure to address these issues

Copyright National Fire Protection Association
Provided by IHS under license with NFPA
No reproduction or networking permitted without license from IHS
Not for Resale

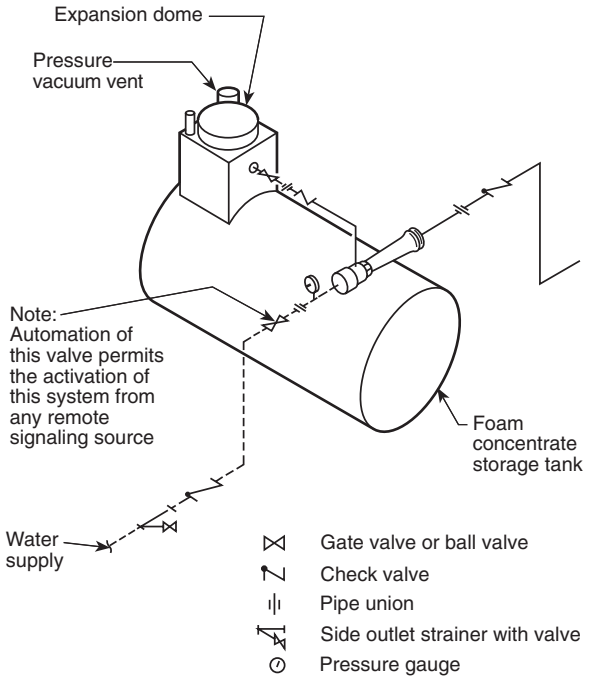

FIGURE A.3.3.27.3 Line Proportioner.

could lead to catastrophic failure. Examples of deficiencies that can be caused by issues beyond normal wear and tear are as follows:

Pressure Gauge

(1) Gauge not returning to zero
(2) Gauge off scale
(3) Gauge with bent needle

Support Devices

(1) Bent hangers and/or rods
(2) Hangers pulled out/off structure
(3) Indication of pipe or hanger movement such as the following:
   (a) Hanger scrape marks on pipe, exposed pipe surface where pipe and hangers are painted
   (b) Fire stop material damaged at pipe penetration of fire rated assembly

Unexplained System Damage

(1) Unexplained system damage beyond normal wear and tear
(2) Bent or broken shafts on valves
(3) Bent or broken valve clappers
(4) Unexplained leakage at branch lines, cross main, or feed main piping
(5) Unexplained leakage at close nipples
(6) Loose bolts on flanges and couplings

Fire Pump

(1) Fire pump driver out of alignment
(2) Vibration of fire pump and/or driver
(3) Unusual sprinkler system piping noises (sharp report, loud bang)

A.4.1.5 Fire protection systems should not be removed from service when the building is not in use; however, where a system that has been out of service for a prolonged period (such as in the case of idle or vacant properties) is returned to service, it is recommended that a responsible and experienced contractor be retained to perform all inspections and tests.

A.4.4.1 Typical records include, but are not limited to, valve inspections; flow, drain, and pump tests; and trip tests of dry pipe, deluge, and preaction valves.

Computer programs that file inspection and test results should provide a means of comparing current and past results and should indicate the need for corrective maintenance or further testing.

Acceptance test records should be retained for the life of the system or its special components. Subsequent test records should be retained for a period of 1 year after the next test. The comparison determines deterioration of system performance or condition and the need for further testing or maintenance.

A.4.4.3 See Section B.2 for information regarding sample forms.

A.4.5 Inspection and periodic testing determine what, if any, maintenance actions are required to maintain the operability of a water-based fire protection system. The standard establishes minimum inspection/testing frequencies, responsibilities, test routines, and reporting procedures but does not define precise limits of anomalies where maintenance actions are required.

Substandard conditions, such as a closed valve, subnormal water pressure, loss of building heat or power, or obstruction of sprinklers, nozzles, detectors, or hose stations, can delay or prevent system actuation and impede manual fire-fighting operations.

A.4.6.1 As referred to in 4.4.4, original records should include, at a minimum, the contractor's material and test certificate, "as-built" drawings and calculations, and any other required or pertinent test reports. These documents establish the conditions under which the systems were first installed and offer some insight to the design intent, installation standards used, and water supply present at the time of installation. Original records are instrumental in determining any subsequent changes or modifications to the building or system.

A.4.6.1.1.1 Paragraph 4.6.1.1.1 provides the option to adopt a performance-based test and inspection method as an alternative means of compliance with 4.6.1.1. The prescriptive test and requirements contained in this standard are essentially qualitative. Equivalent or superior levels of performance can be demonstrated through quantitative performance-based analyses. This section provides a basis for implementing and monitoring a performance-based program acceptable under this option (providing approval is obtained by the AHJ).

The concept of a performance-based testing and inspection program is to establish the requirements and frequencies at which inspection must be performed to demonstrate an acceptable level of operational reliability. The goal is to balance the inspection/test frequency with proven reliability of the system or component. The goal of a performance-based inspection program is also to adjust test/inspection frequencies commensurate with historical documented equipment performance and desired reliability. Frequencies of test/inspection under a performance-based program can be extended or reduced from the prescriptive test requirements contained in this standard when continued testing has been

Copyright National Fire Protection Association
Provided by IHS under license with NFPA
No reproduction or networking permitted without license from IHS
Not for Resale

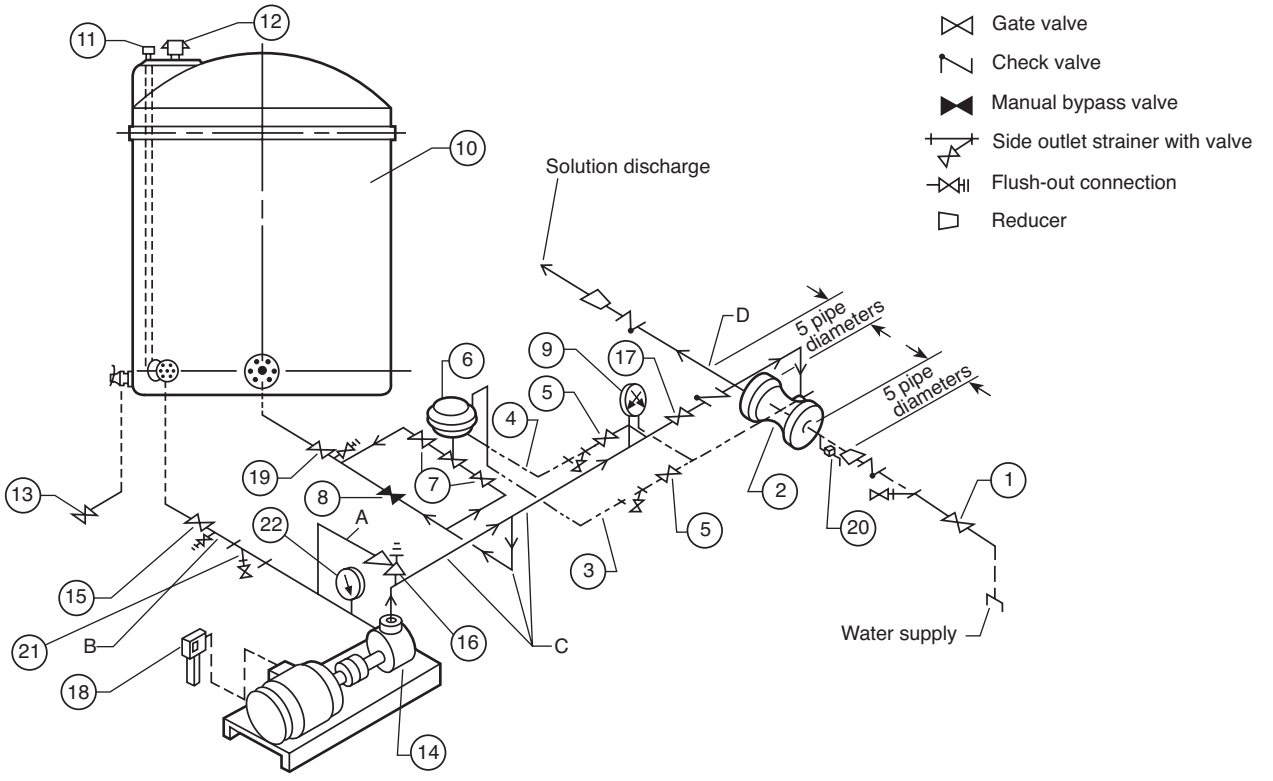

Legend:

1 Water supply valve (normally closed)
2 Ratio controller
3 Water balance line — minimum 3/16 in. (5 mm) I.D. pipe or tubing recommended
4 Concentrate balance line — minimum 3/16 in. (5 mm) I.D. pipe or tubing recommended
5 Sensing line valves (normally open)
6 Diaphragm control valve — automatic pressure balance — must be in vertical position
7 Block valves (normally open)
8 Manual bypass valve (normally open)
9 Water and concentrate pressure gauge (duplex)
10 Foam concentrate storage tank
11 Concentrate storage tank fill connection
12 Pressure vacuum vent
13 Concentrate storage tank drain valve (normally closed)
14 Foam concentrate pump and motor
15 Concentrate pump supply valve (normally open)
16 Pressure relief valve (setting as required by system)
17 Concentrate pump discharge valve (normally open)
18 Electric motor starter and switch
19 Concentrate return line valve (normally open)
20 Ball drip valve — 3/4 in. (20 mm) (install in horizontal position)
21 Strainer with valved side outlet
22 Compound gauge

Operation:

Start concentrate pump (18). Open water supply valve (1). Open concentrate pump discharge valve (17). Equal gauge readings then maintained at (9) by the automatic valve (6). For manual operation, valves (7) can be closed and equal gauge readings maintained by regulating valve (8) manually.

System Automation:

By automating certain valves, the balanced pressure proportioning system can be activated from any remote signaling source.

- Water supply valve (1), normally closed, to be automatically operated;
- Concentrate pump discharge valve (17), normally closed, to be automatically operated;
- Electric motor starter switch (18) to be automatically operated.

FIGURE A.3.3.27.4 Standard Balanced Pressure Proportioner.

documented indicating a higher or lower degree of reliability compared to the AHJ's expectations of performance. Additional program attributes that should be considered when adjusting test/inspection frequencies include the following:

(1) System/component preventive maintenance programs
(2) Consequences of system maloperation
(3) System/component repair history
(4) Building/service conditions

Fundamental to implementing a performance-based program is that adjusted test and inspection frequencies must be technically defensible to the AHJ and supported by evidence of higher or lower reliability. Data collection and retention must be established so that the data utilized to alter frequencies are representative, statistically valid, and evaluated against firm criteria. Frequencies should not arbitrarily be extended or reduced without a suitable basis and rationale. It must be noted that transitioning to a performance-based program might require additional expenditures of resources in order to collect and analyze failure data, coordinate review efforts, change program documents, and seek approval from the AHJ. The following factors should be considered in determining whether a transition to a performance-based test program as permitted in 4.6.1.1.1 is appropriate:

Copyright National Fire Protection Association
Provided by IHS under license with NFPA
No reproduction or networking permitted without license from IHS
Not for Resale

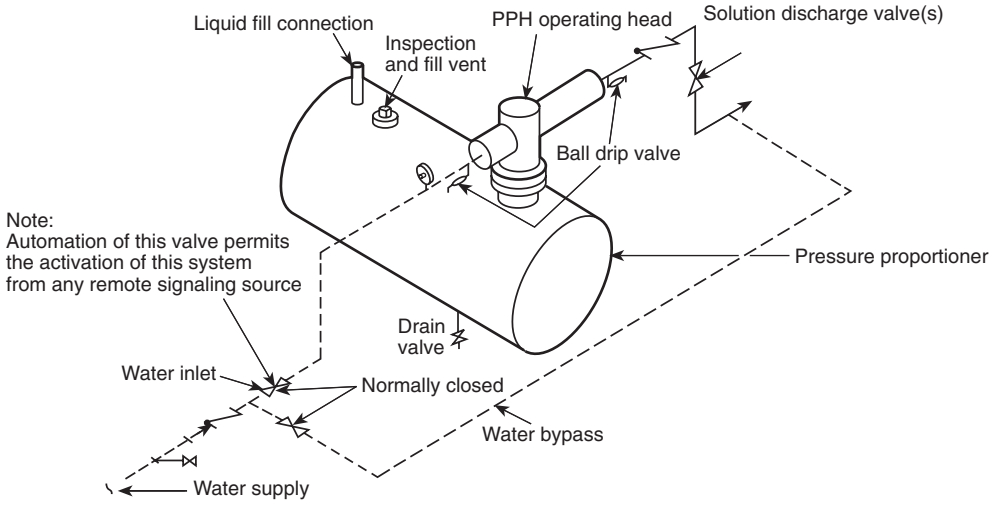

FIGURE A.3.3.27.5 Standard Pressure Proportioner.

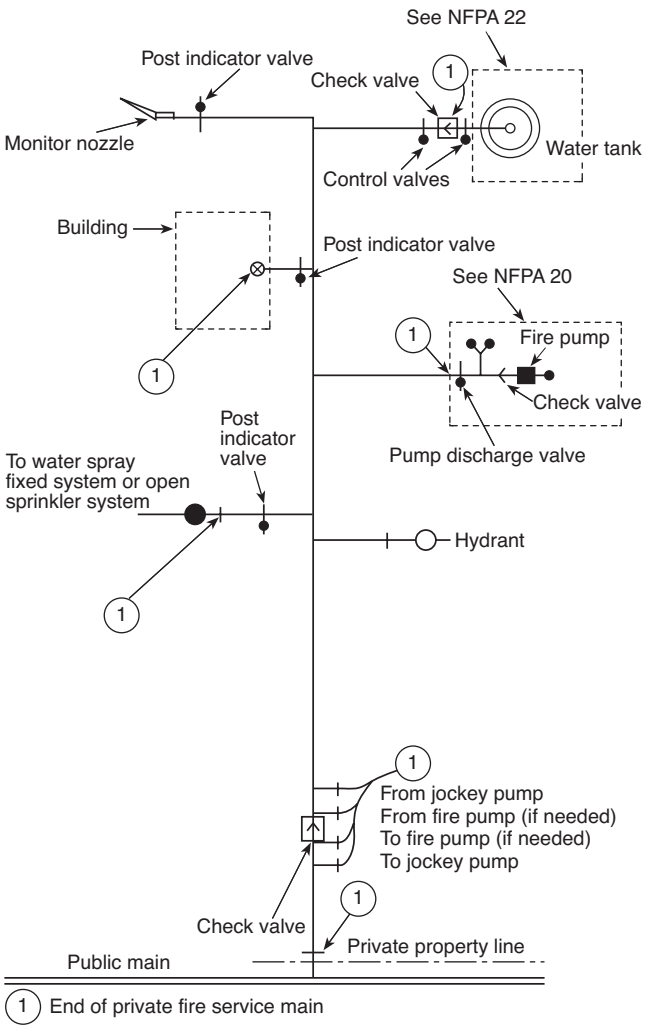

FIGURE A.3.6.3 Typical Private Fire Service Main. [24:Figure A.3.3.11]

(1) Past system/component reliability — have problems routinely been identified during the performance of the prescriptive test requirements of 4.6.1.1, or have systems consistently performed with minimal discrepancies noted?
(2) Do the recurring resource expenditures necessary to implement the prescriptive test requirements in 4.6.1.1 justify conducting the detailed analysis needed to support a performance-based testing program?
(3) Is the increased administrative burden of implementing, documenting, and monitoring a performance-based program worthwhile?

Failure Rate Calculation

A performance-based program requires that a maximum allowable failure rate be established and approved by the AHJ in advance of implementation. The use of historical system/component fire system inspection records can be utilized to determine failure rates. One method of calculating the failure rate of a fire system is based on the following equation:

$$FSFR(t) = \frac{NF}{(NC)(t)}$$

where:
FSFR(t) = fire system failure rate (failures per year)
NF = number of failures
NC = total number of fire systems inspected or tested
t = time interval of review in years

Example

Data are collected for 50 fire pump weekly tests over a 5-year period. The testing is conducted weekly, as described in 8.3.1. A review of the data has identified five failures:

Total components: 280
Data collection period: 5 years
Total failures: 5

$$FSFR = \frac{5}{280 \times 5} = 0.003/\text{year}$$

A fundamental requirement of a performance-based program is the continual monitoring of fire system/component failure rates and determining whether they exceed the maximum

Copyright National Fire Protection Association
Provided by IHS under license with NFPA
No reproduction or networking permitted without license from IHS
Not for Resale

allowable failure rates as agreed upon with the AHJ. The process used to complete this review should be documented and repeatable.

Coupled with this ongoing review is a requirement for a formalized method of increasing or decreasing the frequency of testing/inspection when systems exhibit either a higher than expected failure rate or an increase in reliability as a result of a decrease in failures, or both.

A formal process for reviewing the failure rates and increasing or decreasing the frequency of testing must be well documented. Concurrence of the AHJ on the process used to determine test frequencies should be obtained in advance of any alterations to the test program. The frequency required for future tests might be reduced to the next inspection frequency and maintained there for a period equaling the initial data review or until the ongoing review indicates that the failure rate is no longer being exceeded — for example, going from annual to semiannual testing when the failure rate exceeds the AHJ's expectations or from annual to every 18 months when the failure trend indicates an increase in reliability.

References

Edward K. Budnick, P.E., "Automatic Sprinkler System Reliability," *Fire Protection Engineering*, Society of Fire Protection Engineers, Winter 2001.

Fire Protection Equipment Surveillance Optimization and Maintenance Guide, Electric Power Research Institute, July 2003.

William E. Koffel, P.E., *Reliability of Automatic Sprinkler Systems, Alliance for Fire Safety.*

NFPA's Future in Performance Based Codes and Standards, July 1995.

NFPA Performance Based Codes and Standards Primer, December 1999.

A.4.6.4 The types of tests required for each protection system and its components, and the specialized equipment required for testing, are detailed in the appropriate chapter.

A.4.6.5 Examples of components or subsystems are fire pumps, drivers or controllers, pressure regulating devices, detection systems and controls, alarm check, and dry pipe, deluge, and preaction valves.

A.4.7 Preventive maintenance includes, but is not limited to, lubricating control valve stems; adjusting packing glands on valves and pumps; bleeding moisture and condensation from air compressors, air lines, and dry pipe system auxiliary drains; and cleaning strainers. Frequency of maintenance is indicated in the appropriate chapter.

Corrective maintenance includes, but is not limited to, replacing loaded, corroded, or painted sprinklers; replacing missing or loose pipe hangers; cleaning clogged fire pump impellers; replacing valve seats and gaskets; restoring heat in areas subject to freezing temperatures where water-filled piping is installed; and replacing worn or missing fire hose or nozzles.

Emergency maintenance includes, but is not limited to, repairs due to piping failures caused by freezing or impact damage; repairs to broken underground fire mains; and replacement of frozen or fused sprinklers, defective electric power, or alarm and detection system wiring.

A.4.8.4 Most places using or storing hazardous materials have stations set up for employees where material safety data sheets (MSDSs) are stored. The inspector should be familiar with the types of materials present and the appropriate actions to take in an emergency.

A.4.9 WARNING: NFPA 20, *Standard for the Installation of Stationary Pumps for Fire Protection*, includes electrical requirements that discourage the installation of a disconnect means in the power supply to electric motor-driven fire pumps. This is intended to ensure the availability of power to the fire pumps. Where equipment connected to those circuits is serviced or maintained, the service person could be subject to unusual exposure to electrical and other hazards. It could be necessary to establish special safe work practices and to use safeguards or personal protective clothing, or both.

A.5.2 The provisions of the standard are intended to apply to routine inspections. In the event of a fire, a post-fire inspection should be made of all sprinklers within the fire area. In situations where the fire was quickly controlled or extinguished by one or two sprinklers, it might be necessary only to replace the activated sprinklers. Care should be taken that the replacement sprinklers are of the same make and model or that they have compatible performance characteristics (*see 5.4.1.1*). Soot-covered sprinklers should be replaced because deposits can result in corrosion of operating parts. In the event of a substantial fire, special consideration should be given to replacing the first ring of sprinklers surrounding the operated sprinklers because of the potential for excessive thermal exposure, which could weaken the response mechanisms.

A.5.2.1.1 The conditions described in this section can have a detrimental effect on the performance of sprinklers by affecting water distribution patterns, insulating thermal elements, delaying operation, or otherwise rendering the sprinkler inoperable or ineffectual.

Severely loaded or corroded sprinklers should be rejected as part of the visual inspection. Such sprinklers could be affected in their distribution or other performance characteristics not addressed by routine sample testing. Lightly loaded or corroded sprinklers could be permitted for continued use if samples are selected for testing based on worst-case conditions and the samples successfully pass the tests.

A.5.2.1.1.1 Sprinkler orientation includes the position of the deflector in relation to the ceiling slope. The deflector is generally required to be parallel to the slope of the ceiling. The inspection should identify any corrections made where deficiencies are noted, for example, pipe with welded outlets and flexible grooved couplings that have "rolled" out of position.

A.5.2.1.1.4 Examples include some floor/ceiling or roof/ceiling assemblies, areas under theater stages, pipe chases, and other inaccessible areas.

A.5.2.1.2 NFPA 13, *Standard for the Installation of Sprinkler Systems*, allows stock furnishings and equipment to be as close as 18 in. (457 mm) to standard spray sprinklers or as close as 36 in. (914 mm) to other types of sprinklers such as ESFR and large drop sprinklers. Objects against walls are permitted to ignore the minimum spacing rules as long as the sprinkler is not directly above the object. Other obstruction rules are impractical to enforce under this standard. However, if obstructions that might cause a concern are present, the owner is advised to have an engineering evaluation performed.

A.5.2.2 The conditions described in 5.2.2 can have a detrimental effect on the performance and life of pipe by affecting corrosion rates or pipe integrity or otherwise rendering the pipe ineffectual.

A.5.2.2.3 Examples include some floor/ceiling or roof/ceiling assemblies, areas under theater stages, pipe chases, and other inaccessible areas.

Copyright National Fire Protection Association
Provided by IHS under license with NFPA
No reproduction or networking permitted without license from IHS
Not for Resale

A.5.2.3 The conditions described in this section can have a detrimental effect on the performance of hangers and braces by allowing failures if the components become loose.

A.5.2.3.3 Examples of hangers and seismic braces installed in concealed areas include some floor/ceiling or roof/ceiling assemblies, areas under theater stages, pipe chases, and other inaccessible areas.

A.5.2.4.1 Due to the high probability of a buildup of excess pressure, gridded wet pipe systems should be provided with a relief valve not less than ¼ in. (6.3 mm) in accordance with NFPA 13, *Standard for the Installation of Sprinkler Systems.*

It is normal, though, that the pressure above the alarm or system check valve is typically higher than that of the water supply as a result of trapped pressure surges.

A.5.2.4.4 See Figure A.5.2.4.4.

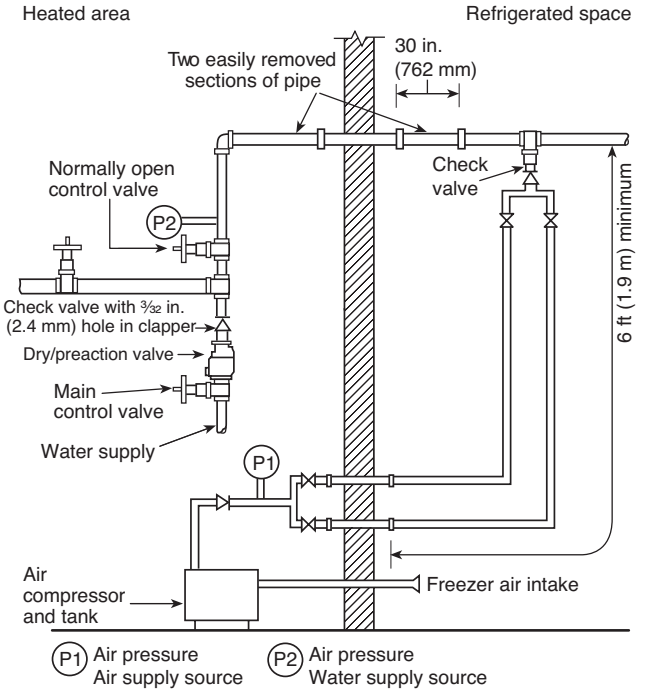

Notes:
1. Check valve with 3/32 in. (2.4 mm) hole in clapper not required if prime water not used.
2. Supply air to be connection to top or side of system pipe.
3. Each removable air line shall be a minimum of 1 in. (25 mm) diameter and minimum of 6 ft (1.9 m) long.

FIGURE A.5.2.4.4 Refrigerator Area Sprinkler System Used to Minimize the Chances of Developing Ice Plugs.

A.5.2.7 The hydraulic nameplate should be secured to the riser with durable wire, chain, or equivalent. *(See Figure A.5.2.7.)*

A.5.3.1 The sprinkler field service testing described in this section is considered routine testing. Non-routine testing should be conducted to address unusual conditions not associated with the routine test cycles mandated within this standard. Due to the nature of non-routine testing, specific tests cannot be identified in this standard. The type of tests to be conducted and the number and location of samples to be submitted should be appropriate to the problem discovered or being investigated and based on consultation with the manufacturer, listing agency, and the authority having jurisdiction.

This system as shown on _____ company
print no _____ dated _____
for _____
at _____ contract no _____
is designed to discharge at a rate of _____
Gpm per ft^2 (L/min per m^2) of floor area over a maximum
area of _____ ft^2 (m^2) when supplied
with water at a rate of _____ gpm (L/min)
at _____ psi (bar) at the base of the riser.
Hose stream allowance of _____
gpm (L/min) is included in the above.

FIGURE A.5.2.7 Sample Hydraulic Nameplate.

Where documentation of the installation date is not available, the start date for the in-service interval should be based upon the sprinkler's manufacture date.

A.5.3.1.1 Sprinklers should be first given a visual inspection for signs of mechanical damage, cleaning, painting, leakage in service, or severe loading or corrosion, all of which are considered causes for immediate replacement. Devices that have passed the visual inspection should then be laboratory tested for sensitivity and functionality. The waterway should clear when sensitivity/functionality tested at 5 psi (0.4 bar) or the minimum listed operating pressure for dry sprinklers.

Thermal sensitivity should be not less than that permitted in post-corrosion testing of new sprinklers of the same type.

Sprinklers that have been in service for a number of years should not be expected to have all of the performance qualities of a new sprinkler. However, if there is any question about their continued satisfactory performance, the sprinklers should be replaced.

See Figure A.5.3.1.1.

A.5.3.1.1.1.3 Due to solder migration caused by the high temperatures to which these devices are exposed, it is important to test them every 5 years. Because of this phenomenon, the operating temperature can vary over a wide range.

A.5.3.1.1.1.5 See 3.3.30.3.

A.5.3.1.1.2 Examples of these environments are paper mills, packing houses, tanneries, alkali plants, organic fertilizer plants, foundries, forge shops, fumigation areas, pickle and vinegar works, stables, storage battery rooms, electroplating rooms, galvanizing rooms, steam rooms of all descriptions including moist vapor dry kilns, salt storage rooms, locomotive sheds or houses, driveways, areas exposed to outside weather, around bleaching equipment in flour mills, all portions of cold storage areas, and portions of any area where corrosive vapors prevail. Harsh water environments include water supplies that are chemically reactive.

Copyright National Fire Protection Association
Provided by IHS under license with NFPA
No reproduction or networking permitted without license from IHS
Not for Resale



FIGURE A.5.3.1.1 Sprinkler Operating Element Identification.

A.5.3.1.2 Within an environment, similar sidewall, upright, and pendent sprinklers produced by the same manufacturer could be considered part of the same sample, but additional sprinklers would be included within the sample if produced by a different manufacturer.

A.5.3.2 The normal life expectancy of a gauge is between 10 and 15 years. A gauge can be permitted to have a reading with an error of ±3 percent of the maximum (full scale) gauge reading. For example, a gauge having 200 psi (13.8 bar) maximum radius installed on a system with 60 psi (4.1 bar) normal pressure can be permitted if the gauge reads from 54 psi to 66 psi (3.7 bar to 4.5 bar).

A.5.3.3.2 Data concerning reliability of electrical waterflow switches indicate no appreciable change in failure rates for those tested quarterly and those tested semiannually. Mechanical motor gongs, however, have additional mechanical and environmental failure modes and need to be tested more often.

A.5.3.3.5 Opening the inspector's test connection can cause the system to trip accidentally.

A.5.3.4 Listed CPVC sprinkler pipe and fittings should be protected from freezing with glycerin only. The use of diethylene, ethylene, or propylene glycols is specifically prohibited. Where inspecting antifreeze systems employing listed CPVC piping, the solution should be verified to be glycerin based.

Many refractometers are calibrated for a single type of antifreeze solution and will not provide accurate readings for the other types of solutions.

A.5.3.4.1 See Figure A.5.3.4.1.

A.5.4.1.1 To help in the replacement of like sprinklers, unique sprinkler identification numbers (SINs) are provided on all sprinklers manufactured after January 1, 2001. The SIN accounts for differences in orifice size, deflector characteristics, pressure rating, and thermal sensitivity.

A.5.4.1.1.1 Old-style sprinklers are permitted to replace existing old-style sprinklers. Old-style sprinklers should not be used to replace standard sprinklers without a complete engineering review of the system. The old-style sprinkler is the type manufactured before 1953. It discharges approximately 40 percent of the water upward to the ceiling, and it can be installed in either the upright or pendent position.

A.5.4.1.3 It is imperative that any replacement sprinkler have the same characteristics as the sprinkler being replaced. If the same temperature range, response characteristics, spacing requirements, flow rates, and *K*-factors cannot be obtained, a sprinkler with similar characteristics should be used, and the system should be evaluated to verify the sprinkler is appropriate for the intended use. With regard to response characteristics, matching identical Response Time Index (RTI) and conductivity factors is not necessary unless special design considerations are given for those specific values.

A.5.4.1.4 A minimum of two sprinklers of each type and temperature rating installed should be provided.

A.5.4.1.6 Other types of wrenches could damage the sprinklers.

A.5.4.1.8 Corrosion-resistant or specially coated sprinklers should be installed in locations where chemicals, moisture, or other corrosive vapors exist.

A.5.4.2 Conversion of dry pipe systems to wet pipe systems on a seasonal basis causes corrosion and accumulation of foreign matter in the pipe system and loss of alarm service.

A.5.4.3 Where pressure testing listed CPVC piping, the sprinkler systems should be filled with water and air should be bled from the highest and farthest sprinkler before test pressure is applied. Air or compressed gas should never be used for pressure testing.

For repairs affecting the installation of less than 20 sprinklers, a test for leakage should be made at normal system working pressure.

A.5.4.4 Certain sprinkler systems, such as those installed aboard ships, are maintained under pressure by a small freshwater supply but are supplied by a raw water source following system activation. In these systems, the effects of raw water are minimized by draining and refilling with freshwater. For systems on ships, flushing within 45 days or the vessel's next port of call, whichever is longer, is considered acceptable.

A.6.3.1.1 The hydraulically most remote hose connections in a building are generally at a roof manifold, if provided, or at the top of a stair leading to the roof. In a multizone system, the testing means is generally at a test header at grade or at a suction tank on higher floors.

A.6.3.2.2 The intent of 6.3.2.2 is to ascertain whether the system retains its integrity under fire conditions. Minimum leakage existing only under test pressure is not cause for repair.

A.7.2.2 The requirements in 7.2.2 outline inspection intervals, conditions to be inspected, and corrective actions necessary for private fire service mains and associated equipment.

A.7.2.2.3 Any flow in excess of the flow through the main drain connection should be considered significant.

Copyright National Fire Protection Association
Provided by IHS under license with NFPA
No reproduction or networking permitted without license from IHS
Not for Resale

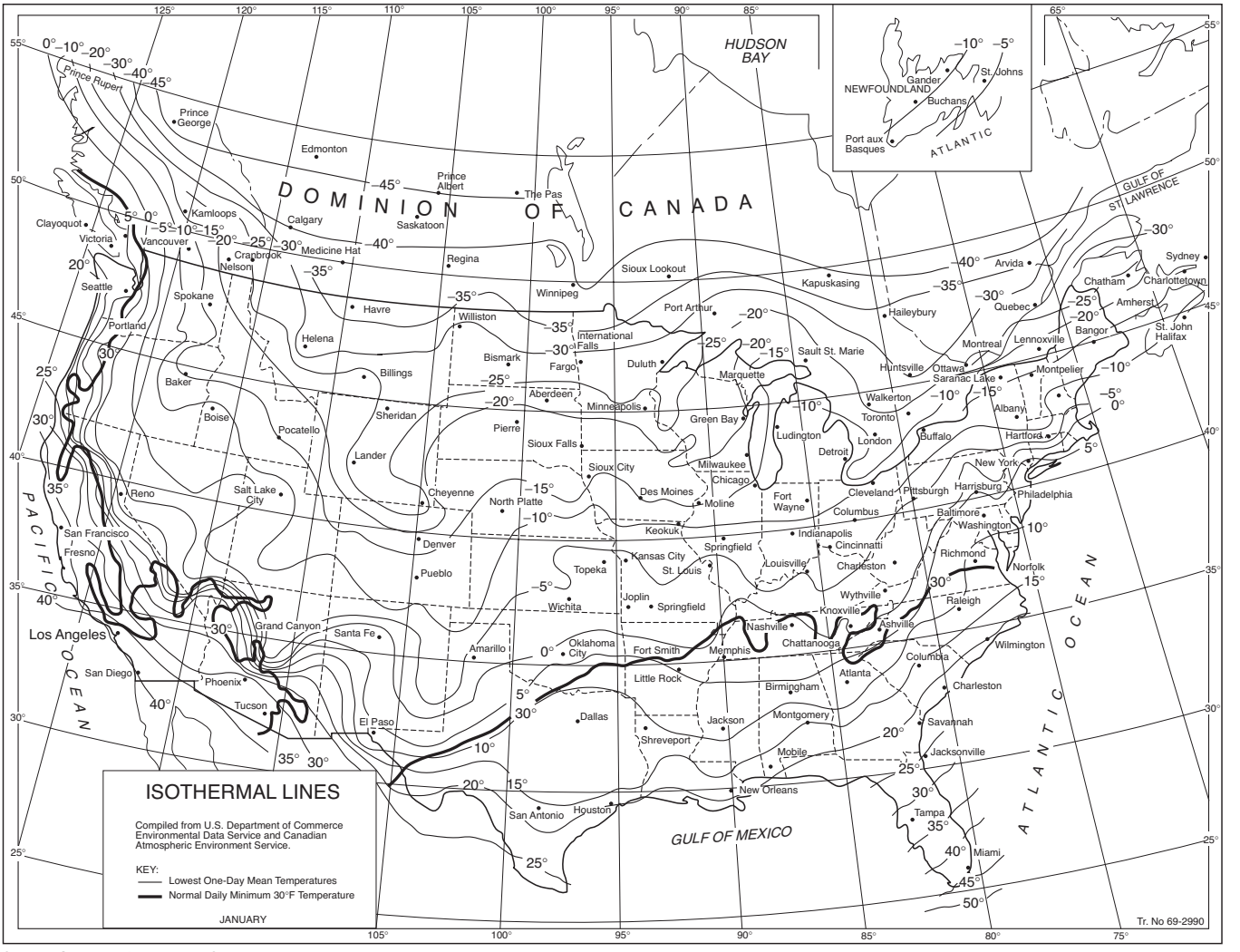

Source: Compiled from United States Weather Bureau records.
For SI units, °C = ⅝ (°F −32); 1 mi = 1.609 km.

FIGURE A.5.3.4.1 Isothermal Lines — Lowest One-Day Mean Temperature (°F). [24:Figure A.10.5.1]

A.7.3.1 Full flow tests of underground piping can be accomplished by methods including, but not limited to, flow through yard hydrants, fire department connections once the check valve has been removed, main drain connections, and hose connections.

A.7.4.2.2 The intent of 7.4.2.2 is to maintain adequate space for use of hydrants during a fire emergency. The amount of space needed depends on the configuration as well as the type and size of accessory equipment, such as hose, wrenches, and other devices that could be used.

A.8.1 A fire pump assembly provides waterflow and pressure for private fire protection. The assembly includes the water supply suction and discharge piping and valving; pump; electric, diesel, or steam turbine driver and control; and the auxiliary equipment appurtenant thereto.

A.8.1.2 Types of centrifugal fire pumps include single and multistage units of horizontal or vertical shaft design. Listed fire pumps have rated capacities of 25 gpm to 5000 gpm (95 L/min to 18,925 L/min), with a net pressure range from approximately 40 psi to 400 psi (2.75 bar to 27.6 bar).

(1) *Horizontal Split Case.* This pump has a double suction impeller with an inboard and outboard bearing and is used with a positive suction supply. A variation of this design can be mounted with the shaft in a vertical plane. *[See Figure A.8.1.2(a).]*

(2) *End Suction and Vertical In-Line.* This pump can have either a horizontal or vertical shaft with a single suction impeller and a single bearing at the drive end. *[See Figure A.8.1.2(b).]*

(3) *Vertical Shaft, Turbine Type.* This pump has multiple impellers and is suspended from the pump head by a column pipe that also serves as a support for the shaft and bearings. This pump is necessary where a suction lift is needed, such as from an underground reservoir, well, river, or lake. *[See Figure A.8.1.2(c).]*

A.8.1.6 Controllers include air-, hydraulic-, or electric-operated units. These units can take power from the energy source for

--`,,```,,,,````-`-`,,`,,`,`,,`---
Copyright National Fire Protection Association
Provided by IHS under license with NFPA
No reproduction or networking permitted without license from IHS
Not for Resale

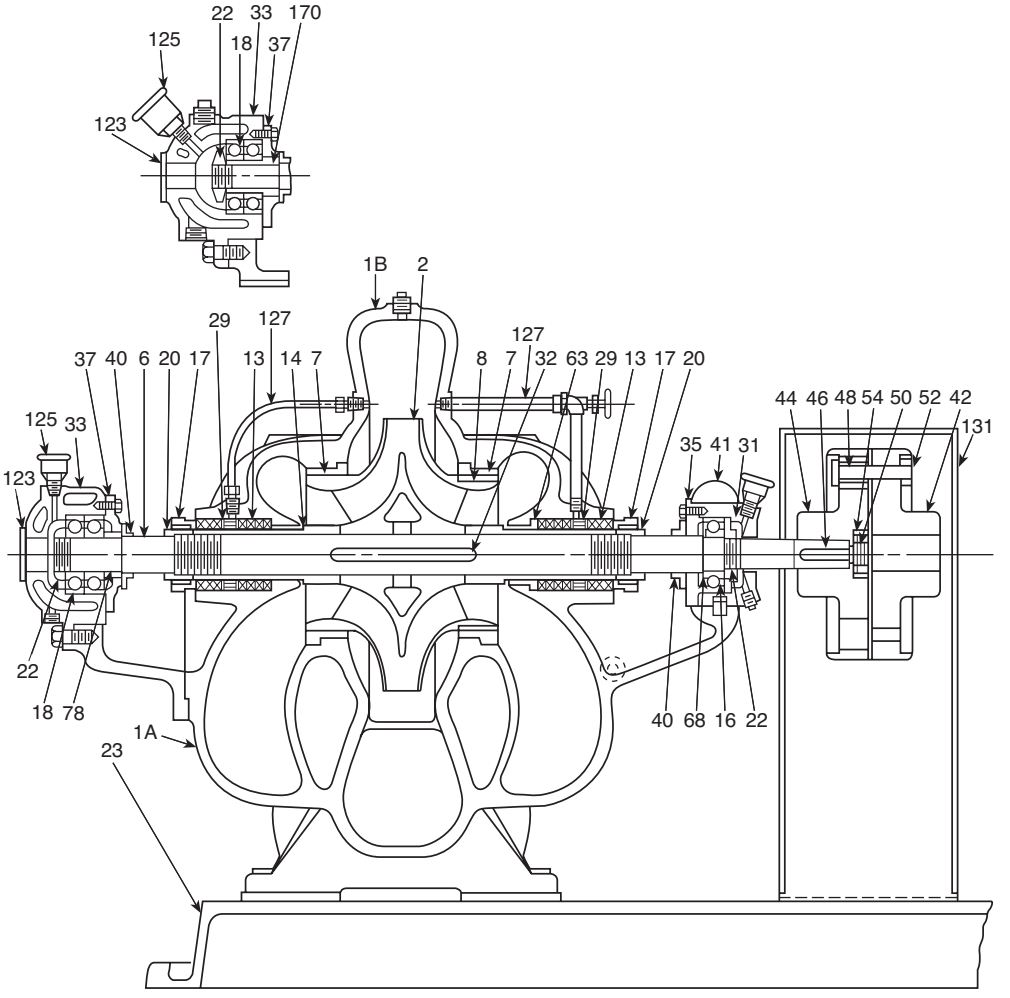

1A Casing, lower half
1B Casing, upper half
2 Impeller
6 Shaft, pump
7 Ring, casing
8 Ring, impeller
13 Packing
14 Sleeve, shaft
16 Bearing, inboard
17 Gland
18 Bearing, outboard
20 Nut, shaft sleeve
22 Locknut
23 Base plate
29 Ring, lantern
31 Housing, bearing, inboard
32 Key, impeller
33 Housing, bearing, outboard
35 Cover, bearing, inboard
37 Cover, bearing, outboard
40 Deflector
41 Cap, bearing, inboard
42 Coupling half driver
44 Coupling half, pump
46 Key, coupling
48 Bushing, coupling
50 Locknut, coupling
52 Pin, coupling
54 Washer, coupling
63 Bushing, stuffing box
68 Collar, shaft
78 Spacer, bearing
123 Cover, bearing end
125 Cup, grease
127 Piping, seal
131 Guard, coupling
170 Adapter, bearing

The numbers used in this figure do not necessarily represent standard part numbers used by any manufacturer.

FIGURE A.8.1.2(a) Impeller Between Bearings, Separately Coupled, Single-Stage Axial (Horizontal) Split Case. ***(Courtesy of Hydraulic Institute Standard for Centrifugal, Rotary and Reciprocating Pumps.)***

their operation, or the power can be obtained elsewhere. Controllers used with electric power sources can apply the source to the driver in one (across-the-line) or two (reduced voltage or current) steps. Controllers can be used with automatic and manual transfer switches to select the available electric power source where more than one is provided.

A.8.2.2 See Table A.8.2.2 and Figure A.8.2.2.

A.8.2.2(5) Visual indicators other than pilot lights can be used for the same purpose.

A.8.3 The purpose of testing the pump assembly is to ensure automatic or manual operation upon demand and continuous delivery of the required system output. An additional purpose is to detect deficiencies of the pump assembly not evident by inspection.

A.8.3.2.2 See Table A.8.3.2.2.

A.8.3.3.1 Peak flow for a fire pump is 150 percent of the rated flow. Minimum flow for a pump is the churn pressure.

A.8.3.3.1.2 The method described in 8.3.3.1.2.3 is not considered as complete as those in 8.3.3.1.2.1 and 8.3.3.1.2.2, because it does not test the adequacy of the water supply for compliance with the requirements of 8.1.3 at the suction flange.

A.8.3.3.3 A pressure relief valve that opens during a flow condition is discharging water that is not measured by the recording device(s). It can be necessary to temporarily close the pressure relief valve to achieve favorable pump test results. At the conclusion of the pump test, the pressure relief valve must be readjusted to relieve pressures in excess of the normal operating pressure of the system components.

If the pressure relief valve is open during the flowing conditions due to the fact that the pressure is too high for the components in the fire protection system, the discharge control valve should be closed prior to closing the pressure relief valve to make sure that the fire protection system is not overpressurized. After the test, the valve must be opened again.

Copyright National Fire Protection Association
Provided by IHS under license with NFPA
No reproduction or networking permitted without license from IHS
Not for Resale

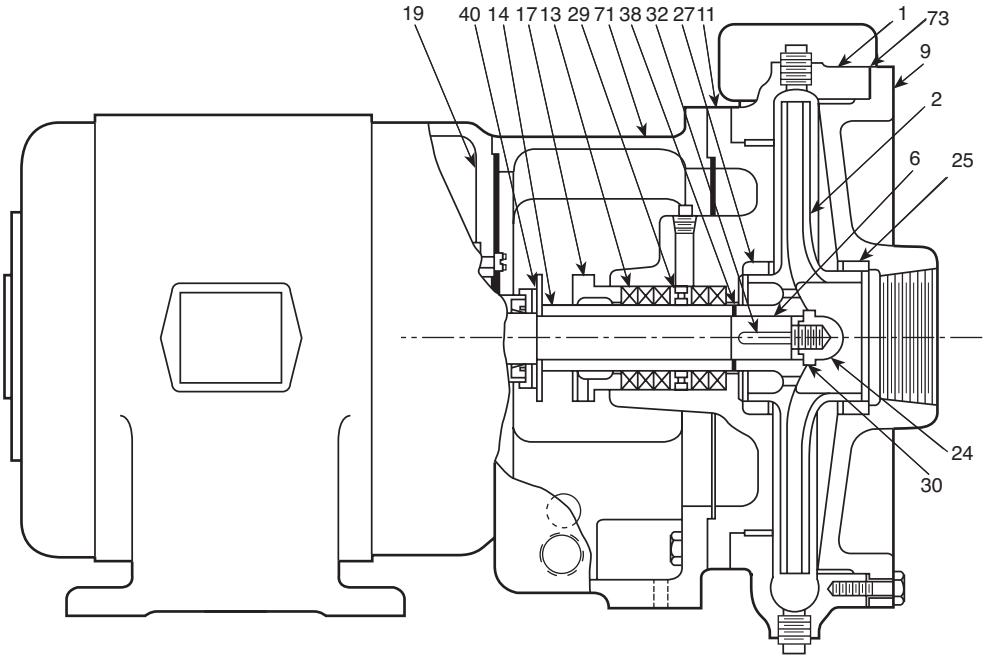

1 Casing
2 Impeller
6 Shaft
9 Cover, suction
11 Cover, stuffing box
13 Packing
14 Sleeve, shaft
17 Gland
19 Frame
24 Nut, impeller
25 Ring, suction cover
27 Ring, stuffing box cover
29 Ring, lantern
30 Gasket, impeller nut
32 Key, impeller
38 Gasket, shaft sleeve
40 Deflector
71 Adapter
73 Gasket

The numbers used in this figure do not necessarily represent standard part numbers used by any manufacturer.

FIGURE A.8.1.2(b) Overhung Impeller, Close-Coupled, Single-Stage, End Suction. ***(Courtesy of Hydraulic Institute Standard for Centrifugal, Rotary and Reciprocating Pumps.)***

A.8.3.3.3.1 A pressure relief valve that is open during a flow condition will affect test results.

A.8.3.3.7 During periods of unusual water supply conditions such as floods, inspection should be on a daily basis.

A.8.3.3.8 *ECM and Sensor Testing.* To verify the operation of the alternate ECM with the stop, the ECM selector switch should be moved to the alternate ECM position. Repositioning of this should cause an alarm on the fire pump controller. Then the engine is started; it should operate normally with all functions. Next, the engine is shut down, switched back to the primary ECM, and restarted briefly to verify that correct switchback has been accomplished.

To verify the operation of the redundant sensor, with the engine running, the wires are disconnected from the primary sensor. There should be no change in the engine operation. The wires are then reconnected to the sensor, then disconnected from the redundant sensor. There should be no change in the engine operation. The wires should next be reconnected to the sensor. This process is repeated for all primary and redundant sensors on the engines. It should be noted whether disconnecting and reconnecting of wires to the sensors can be done while the engine is not running, then starting the engine after each disconnecting and reconnecting of the wires to verify engine operation.

A.8.3.4.4 If pumps and drivers were shipped from the factory with both machines mounted on a common base plate, they were accurately aligned before shipment. All base plates are flexible to some extent and, therefore, must not be relied on to maintain the factory alignment. Realignment is necessary after the complete unit has been leveled on the foundation and again after the grout has set and foundation bolts have been tightened. The alignment should be checked after the unit is piped and rechecked periodically. To facilitate accurate field alignment, most manufacturers either do not dowel the pumps or drivers on the base plates before shipment or, at most, dowel the pump only.

After the pump and driver unit has been placed on the foundation, the coupling halves should be disconnected. The coupling should not be reconnected until the alignment operations have been completed.

The purpose of the flexible coupling is to compensate for temperature changes and to permit end movement of the shafts without interference with each other while transmitting power from the driver to the pump.

There are two forms of misalignment between the pump shaft and the driver shaft:

(1) *Angular misalignment.* Shafts with axes concentric but not parallel
(2) *Parallel misalignment.* Shafts with axes parallel but not concentric

The faces of the coupling halves should be spaced within the manufacturer's recommendations and far enough apart so that they cannot strike each other when the driver rotor is moved hard over toward the pump. Due allowance should be made for wear of the thrust bearings. The necessary tools for an approximate check of the alignment of a flexible coupling are a straight edge and a taper gauge or a set of feeler gauges.

A check for angular alignment is made by inserting the taper gauge or feelers at four points between the coupling faces and comparing the distance between the faces at four points spaced at 90 degree intervals around the coupling [*see Figure A.8.3.4.4(a)*]. The unit will be in angular alignment when the measurements show that the coupling faces are the same distance apart at all points.

A check for parallel alignment is made by placing a straight edge across both coupling rims at the top, bottom, and at both

Copyright National Fire Protection Association
Provided by IHS under license with NFPA
No reproduction or networking permitted without license from IHS
Not for Resale

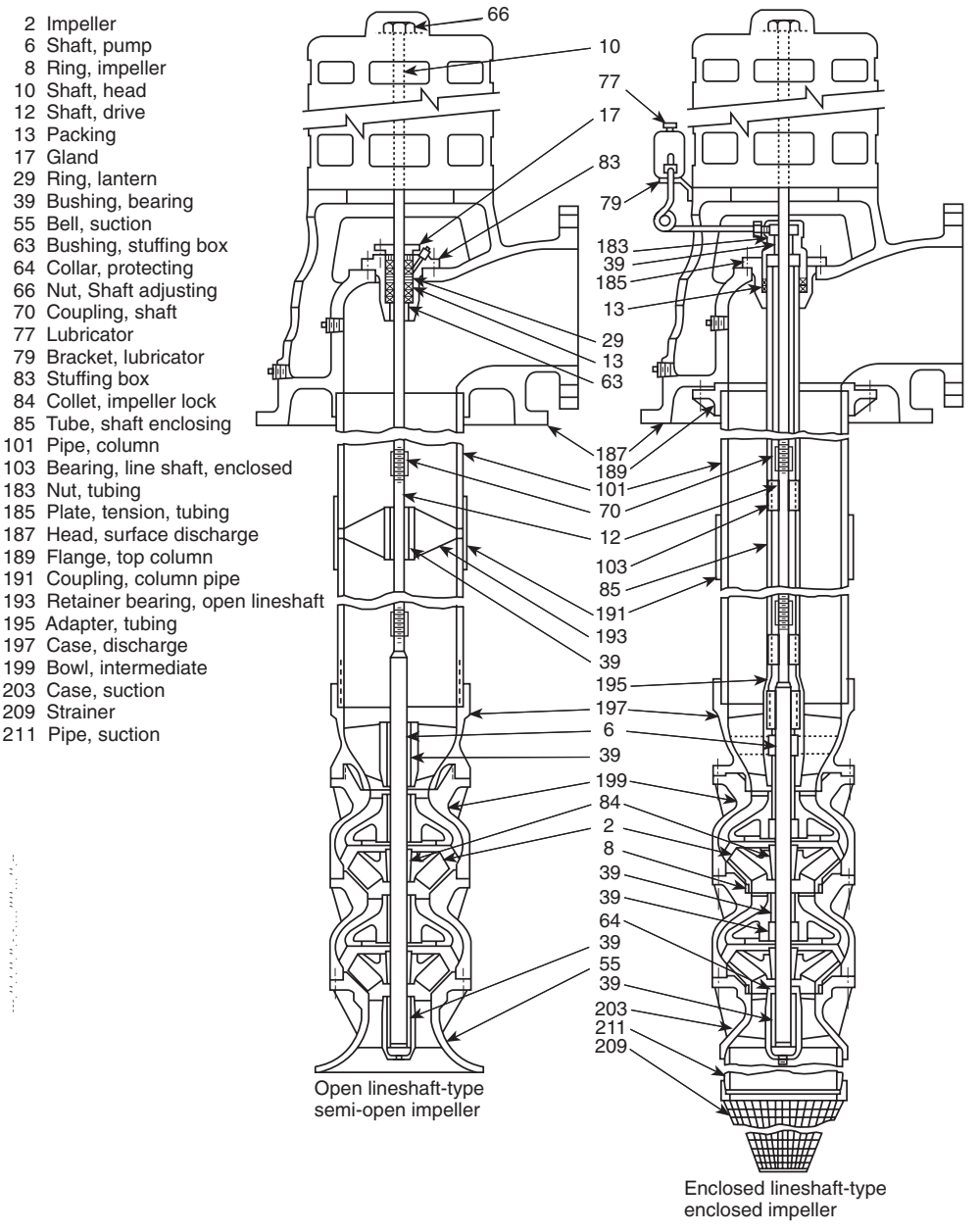

The cross-sectional views illustrate the largest possible number of parts in their proper relationship and some construction modifications but do not necessarily represent recommended design.

FIGURE A.8.1.2(c) Turbine-Type, Vertical, Multistage, Deep Well. ***(Courtesy of Hydraulic Institute Standard for Centrifugal, Rotary and Reciprocating Pumps.)***

sides [*see Figure A.8.3.4.4(b)*]. The unit will be in parallel alignment when the straight edge rests evenly on the coupling rim at all positions. Allowance may be necessary for temperature changes and for coupling halves that are not of the same outside diameter. Care must be taken to have the straight edge parallel to the axes of the shafts.

Angular and parallel misalignment are corrected by means of shims under the motor mounting feet. After each change, it is necessary to recheck the alignment of the coupling halves. Adjustment in one direction may disturb adjustments already made in another direction. It should not be necessary to adjust the shims under the pump.

The permissible amount of misalignment will vary with the type of pump and driver; and coupling manufacturer, model, and size. [**20:** A.6.5]

A.8.3.5.1 Where the information is available, the test plot should be compared with the original acceptance test plot. It should be recognized that the acceptance test plot could exceed the minimum acceptable pump requirements as indicated by the

Copyright National Fire Protection Association
Provided by IHS under license with NFPA
No reproduction or networking permitted without license from IHS
Not for Resale

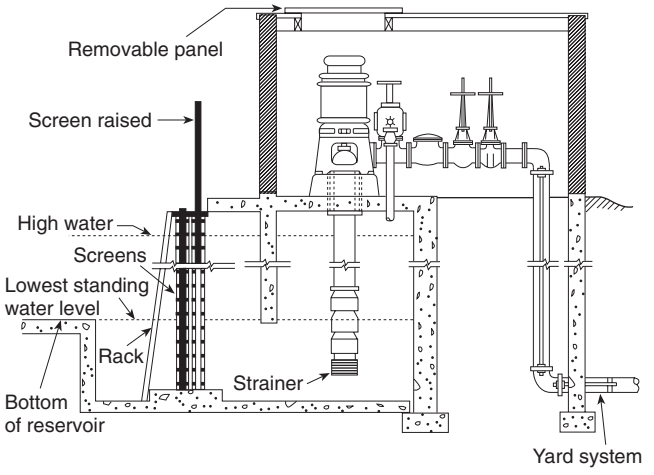

FIGURE A.8.2.2 Wet Pit Suction Screen Installation.

Table A.8.2.2 Weekly Observations — Before Pumping

Item	Before Pump Is Operated
Horizontal pumps	1. Check drip pockets under packing glands for proper drainage. Standing water in drip pockets is the most common cause of bearing failure. 2. Check packing adjustment — approximately one drop per second is necessary to keep packing lubricated. 3. Observe suction and discharge gauges. Readings higher than suction pressure indicate leakage back from system pressure through either the fire pump or jockey pump.

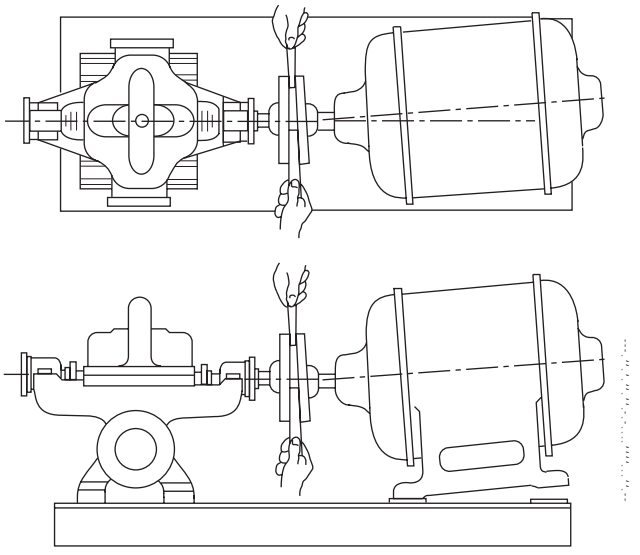

FIGURE A.8.3.4.4(a) Checking Angular Alignment. ***(Courtesy of Hydraulic Institute Standard for Centrifugal, Rotary and Reciprocating Pumps.)***

rated characteristics for the pump. While a reduction in output is a matter of concern, this condition should be evaluated in light of meeting the rated characteristics for the pump. [*See Figure A.8.3.5.3(1).*]

The test equipment should be of high quality and accuracy. All equipment should have been calibrated within the last 12 months by an approved calibration facility. Where possible, the calibration facility should provide documentation indicating the instrument reading against the calibrated reading. Instruments that pass the calibration test should be labeled by the calibration facility with the name of the facility and the date of the test.

Table A.8.3.2.2 Weekly Observations — While Pumping

Item	While Pump Is Operating
Horizontal pumps	1. Read suction and discharge gauges — difference between these readings indicates churn pressure, which should match churn pressure as shown on fire pump nameplate. 2. Observe packing glands for proper leakage for cooling of packing. 3. Observe discharge from casing relief valve — adequate flow keeps pump case from overheating.
Vertical pumps	1. Read discharge gauge — add distance to water level in feet (or meters) and divide by 2.31 to compute psi (30.47 to compute bar). This total must match churn pressure as shown on fire pump nameplate. 2. Observe packing glands for proper leakage for cooling of packing. 3. Observe discharge from casing relief valve — adequate flow keeps pump case from overheating.
Diesel engines	1. Observe discharge of cooling water from heat exchanger — if not adequate, check strainer in cooling system for obstructions. If still not adequate, adjust pressure reducing valve for correct flow. 2. Check engine instrument panel for correct speed, oil pressure, water temperature, and ammeter charging rate. 3. Check battery terminal connections for corrosion and clean if necessary. 4. After pump has stopped running, check intake screens, if provided; change diesel system pressure recorder chart and rewind if necessary.

Copyright National Fire Protection Association
Provided by IHS under license with NFPA
No reproduction or networking permitted without license from IHS
Not for Resale

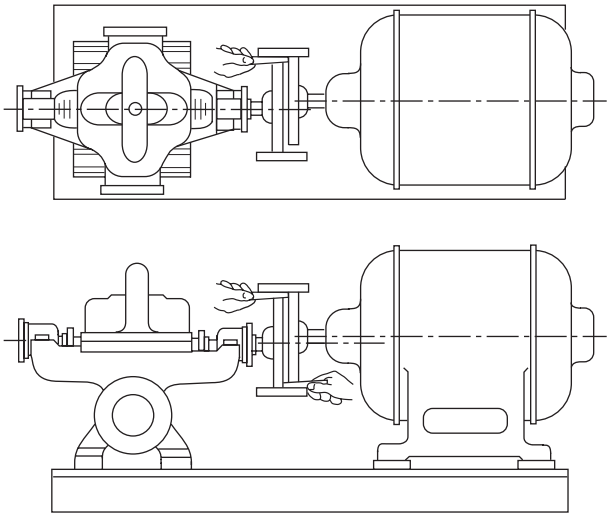

FIGURE A.8.3.4.4(b) Checking Parallel Alignment. ***(Courtesy of Hydraulic Institute Standard for Centrifugal, Rotary and Reciprocating Pumps.)***

Pressure gauges should have an accuracy not greater than 1 percent of full scale. To prevent damage to a pressure gauge utilizing a Bourdon tube mechanism, it should not be used where the expected test pressure is greater than 75 percent of the test gauge scale. Some digital gauges can be subjected to twice the full scale pressure without damage. The manufacturer's recommendations should be consulted for the proper use of the gauge. To be able to easily read an analog gauge, the diameter of the face of the analog gauge should be greater than 3 in. (76 mm). Pressure snubbers should be used for all gauges to minimize needle fluctuation. All gauges used in the test should be such that a gauge with the lowest full scale pressure is used. For example, a 300 psi (20.7 bar) gauge should not be used to measure a 20 psi (1.4 bar) pitot pressure.

Equipment other than pressure gauges, such as volt/ammeters, tachometers, and flowmeters, should be calibrated to the manufacturer's specifications. The readings from equipment with this level of accuracy and calibration can be used without adjustment for accuracy.

A.8.3.5.3(1) See Figure A.8.3.5.3(1).

A.8.3.5.4 See Annex C.

A.8.4.2 See 8.3.3.4.

A.8.5.1 It is important to provide proper bearing lubrication and to keep bearings clean. Some bearings are the sealed type and need no relubrication. Couplings with rubber drive parts do not need lubrication; other types generally do. The following practices are recommended:

(1) Lubricant fittings should be cleaned before relubricating with grease.
(2) The proper amount of lubricant should be used. Too much lubricant results in churning, causing excessive power loss and overheating.
(3) The correct lubricant should be used.

Engine Maintenance. Engines should be kept clean, dry, and well lubricated. The proper oil level in the crankcase should be maintained.

Battery Maintenance. Only distilled water should be used in battery cells. Plates should be kept submerged at all times. An automatic battery charger is not a substitute for proper maintenance of the battery and charger. Periodic inspection ensures that the charger is operating correctly, the water level in the battery is adequate, and the battery is holding its proper charge.

Fuel Supply Maintenance. The fuel storage tank should be kept at least two-thirds full. Fuel should be maintained free of

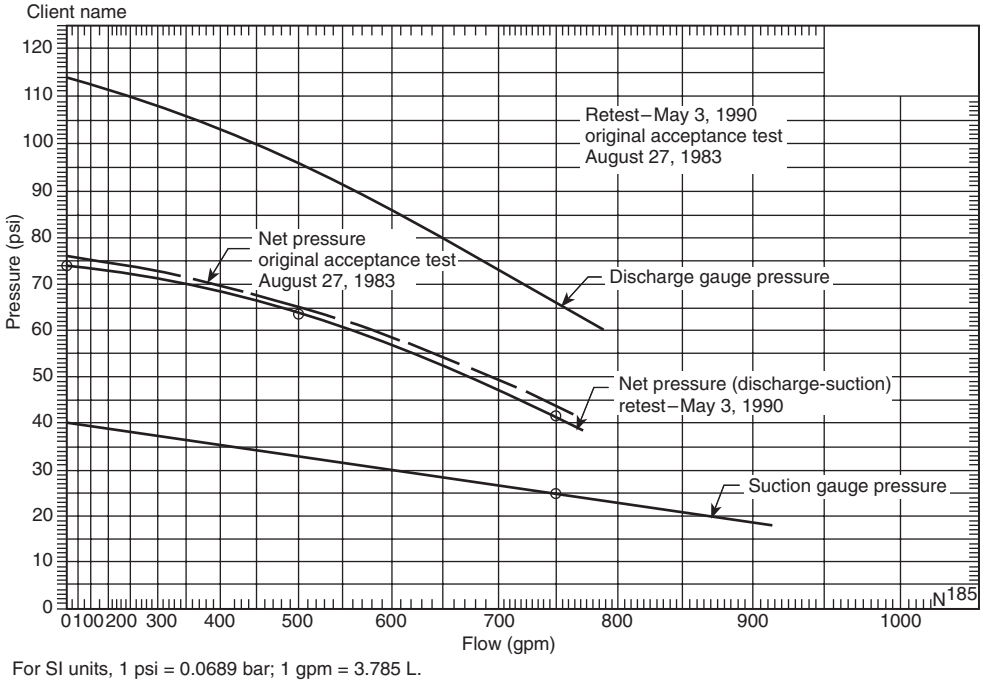

For SI units, 1 psi = 0.0689 bar; 1 gpm = 3.785 L.

FIGURE A.8.3.5.3(1) Fire Pump Retest.

Copyright National Fire Protection Association
Provided by IHS under license with NFPA
No reproduction or networking permitted without license from IHS
Not for Resale

water and foreign material by draining water and foreign material from the tank sump annually. This necessitates draining approximately 5 gal (19 L).

Temperature Maintenance. The temperature of the pump room, pump house, or area where engines are installed should never be less than the minimum recommended by the engine manufacturer. The manufacturer's temperature recommendations for water and oil heaters should be followed.

A.9.1 One source of information on the inspection and maintenance of steel gravity and suction tanks is the AWWA *Manual of Water Supply Practices — M42 Steel Water-Storage Tanks*, Part III and Annex C.

A.9.1.3 The inspection, testing, and maintenance of water storage tanks can involve or result in a system that is out of service. In cases where a tank is the sole source of supply to a fire protection system, it is recommended that an alternate water supply be arranged while maintenance is performed on the tank.

A.9.2.1.1 More frequent inspections should be made where extreme conditions, such as freezing temperatures or arid climate, can increase the probability of adversely affecting the stored water.

Supervisory water level alarms installed on tanks provide notification that the tank water level is above or below an acceptable level. The water level of the tank is the main concern as opposed to the condition of the water. For convenience, inspection of the condition of the water can take place concurrently with the water level inspection.

A.9.2.5.1 Lightning protection systems, where provided, should be inspected, tested, and maintained in accordance with NFPA 780, *Standard for the Installation of Lightning Protection Systems.*

A.9.2.6.1.1 To aid in the inspection and evaluation of test results, it is a good idea for property owners to stencil the last known date of an interior paint job on the exterior of the tank in a conspicuous place. A typical place is near one of the manways at eye level.

A.9.2.6.5 This inspection can be performed by looking for dents on the tank floor. Additionally, walking on the tank floor and looking for buckling of the floor will identify problem areas.

A.9.3.1 The testing procedure for listed mercury gauges is as follows.

To determine that the mercury gauge is accurate, the gauge should be tested every 5 years as follows [steps (1) through (7) coincide with Figure A.9.3.1]:

(1) Overflow the tank.
(2) Close valve F. Open test cock D. The mercury will drop quickly into the mercury pot. If it does not drop, there is an obstruction that needs to be removed from the pipe or pot between the test cock and the gauge glass.
(3) If the mercury does lower at once, close cock D and open valve F. If the mercury responds immediately and comes to rest promptly opposite the "FULL" mark on the gauge board, the instrument is functioning properly.
(4) If the mercury column does not respond promptly and indicate the correct reading during the test, there probably are air pockets or obstructions in the water connecting pipe. Open cock D. Water should flow out forcibly. Allow water to flow through cock D until all air is expelled and rusty water from the tank riser appears. Close cock D. The gauge now likely will read correctly. If air separates from the water in the 1 in. (25 mm) pipe due to being enclosed in a buried tile conduit with steam pipes, the air can be removed automatically by installing a ¾ in. (20 mm) air trap at the high point of the piping. The air trap usually can be installed most easily in a tee connected by a short piece of pipe at E, with a plug in the top of the tee so that mercury can be added in the future, if necessary, without removing the trap. If there are inaccessible pockets in the piping, as where located below grade or under concrete floors, the air can be removed only through petcock D.
(5) If, in step (4), the water does not flow forcibly through cock D, there is an obstruction that needs to be removed from the outlet of the test cock or from the water pipe between the test cock and the tank riser.
(6) If there is water on top of the mercury column in the gauge glass, it will provide inaccurate readings and should be removed. First, lower the mercury into the pot as in step (2). Close cock D and remove plug G. Open valve F very slowly, causing the mercury to rise slowly and the water above it to drain through plug G. Close valve F quickly when mercury appears at plug G, but have a receptacle

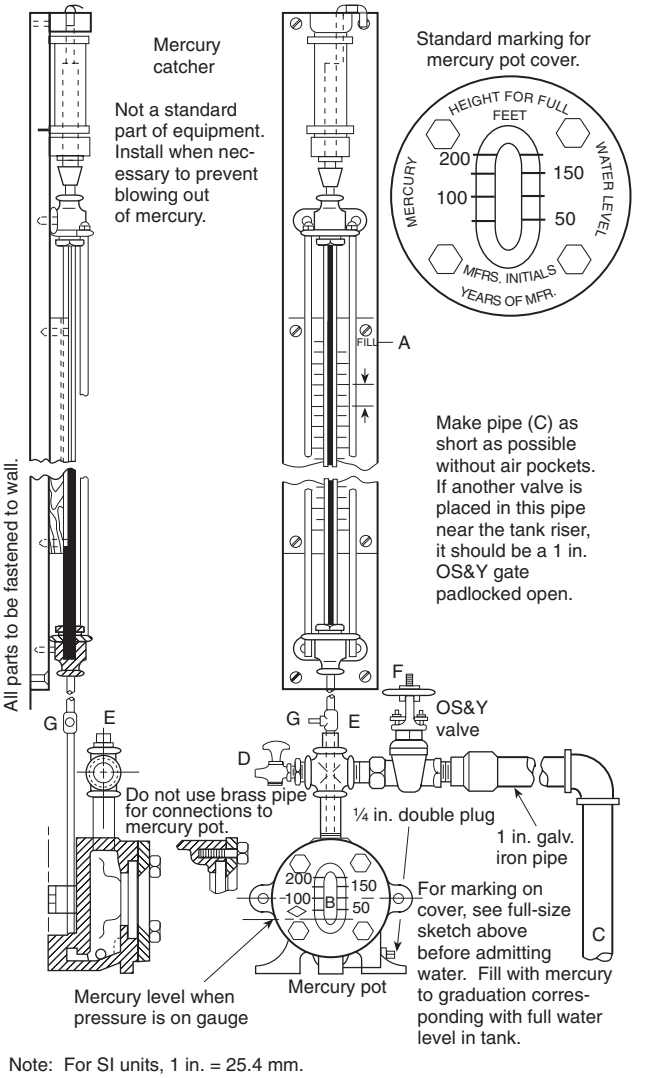

Note: For SI units, 1 in. = 25.4 mm.

FIGURE A.9.3.1 Mercury Gauge.

Copyright National Fire Protection Association
Provided by IHS under license with NFPA
No reproduction or networking permitted without license from IHS
Not for Resale

ready to catch any mercury that drains out. Replace plug G. Replace any escaped mercury in the pot.

(7) After testing, leave valve F open, except under the following conditions: If it is necessary to prevent forcing mercury and water into the mercury catcher, the controlling valve F can be permitted to be closed when filling the tank but should be left open after the tank is filled. In cases where the gauge is subjected to continual fluctuation of pressure, it could be necessary to keep the gauge shut off except when it needs to be read. Otherwise, it could be necessary to remove water frequently from the top of the mercury column as in step (5).

A.9.3.4 The manufacturer's instructions should be consulted for guidance on testing. In some situations, it might not be possible to test the actual initiating device. In such cases, only the circuitry should be tested.

A.9.3.5 See A.9.3.4.

A.10.1 The effectiveness and reliability of water spray fixed systems depends on maintenance of the integrity of hydraulic characteristics, water control valves, deluge valves and their fire detection/actuation systems, pipe hangers, and prevention of obstructions to nozzle discharge patterns.

Water spray fixed systems are most commonly used to protect processing equipment and structures, flammable liquid and gas vessels, piping, and equipment such as transformers, oil switches, and motors. They also have been shown to be effective on many combustible solids.

Many of the components and subsystems found in a water spray system require the same inspection, test, and maintenance procedures where they are used in automatic sprinkler systems and other fixed water-based fire protection systems. Other chapters of this standard should be consulted for particulars on required inspection and maintenance.

A.10.1.2 Insulation acting in lieu of water spray protection is expected to protect a vessel or structure for the duration of the exposure. The insulation is to prevent the temperature from exceeding 850°F (454°C) for structural members and 650°F (393°C) for vessels. If the insulation is missing, the structure or vessel is not considered to be protected, regardless of water spray protection or insulation on other surfaces. To reestablish the proper protection, the insulation should be replaced or the water spray protection should be extended, using the appropriate density.

A.10.1.4 The inspection, testing, and maintenance of water spray fixed systems can involve or result in a system that is out of service. Also see Chapter 15.

A.10.2.4 The operation of the water spray system is dependent on the integrity of the piping, which should be kept in good condition and free of mechanical damage. The pipe should not be used for support of ladders, stock, or other material. Where piping is subject to a corrosive atmosphere, a protective corrosion-resistant coating should be provided and maintained. Where the age or service conditions warrant, an internal examination of the piping should be made. Where it is necessary to flush all or part of the piping system, this work should be done by sprinkler contractors or other qualified workers.

A.10.2.4.1 Rubber-gasketed fittings in the fire areas are inspected to determine whether they are protected by the water spray or other approved means. Unless properly protected, fire could cause loss of the rubber gasket following excessive leakage in a fire situation.

A.10.2.4.2 Hangers and supports are designed to support and restrain the piping from severe movement when the water supply operates and to provide adequate pipe slope for drainage of water from the piping after the water spray system is shut down. Hangers should be kept in good repair. Broken or loose hangers can put undue strain on piping and fittings, cause pipe breaks, and interfere with proper drainage of the pipe. Broken or loose hangers should be replaced or refastened.

A.10.2.5 Systems need inspection to ensure water spray nozzles effectively discharge water unobstructed onto surfaces to be protected from radiant heat (exposure protection) or onto flaming surfaces to extinguish or control combustion. Factors affecting the proper placement of water spray nozzles include the following:

(1) Changes or additions to the protected area that obstruct existing nozzles or require additional coverage for compliance
(2) Removal of equipment from the protected area that results in nozzle placement at excessive distances from the hazard
(3) Mechanical damage or previous flow tests that have caused nozzles to be misdirected
(4) A change in the hazard being protected that requires more or different nozzles to provide adequate coverage for compliance

Spray nozzles can be permitted to be placed in any position necessary to obtain proper coverage of the protected area. Positioning of nozzles with respect to surfaces to be protected, or to fires to be controlled or extinguished, should be guided by the particular nozzle design and the character of water spray produced. In positioning nozzles, care should be taken that the water spray does not miss the targeted surface and reduce the efficiency or calculated discharge rate.

A.10.2.6.2 Water supply piping should be free of internal obstructions that can be caused by debris (e.g., rocks, mud, tubercles) or by closed or partially closed control valves. See Chapter 5 for inspection and maintenance requirements.

A.10.2.7 Mainline strainers should be removed and inspected for damaged and corroded parts every 5 years.

A.10.3.3 The property owner's representative should take care to prevent damage to equipment or the structure during the test. Damage could be caused by the system discharge or by runoff from the test site. It should be verified that there is adequate and unobstructed drainage. Equipment should be removed or covered as necessary to prevent damage. Means such as curbing or sandbagging should be used to prevent entry of the water.

A.10.3.4.1 Test methods are as follows:

(1) Some detection circuits can be permitted to be deliberately desensitized in order to override unusual ambient conditions. In such cases, the response required in 10.3.4.1 can be permitted to be exceeded.
(2) Testing of integrating tubing systems can be permitted to be related to this test by means of a standard pressure impulse test specified by the listing laboratory.
(3) One method of testing heat detection uses a radiant heat surface at a temperature of 300°F (149°C) and a capacity of 350 watts at a distance of 1 in. (25 mm) but not more than 2 in. (50 mm) from the nearest part of the detector. This method of testing with an electric test set should not be used in hazardous locations. Other test methods can be permitted to be employed, but the results should be obtained under these conditions.

Copyright National Fire Protection Association
Provided by IHS under license with NFPA
No reproduction or networking permitted without license from IHS
Not for Resale

A.10.3.4.3 Spray nozzles can be of different sizes and types. Some are more subject to internal obstructions than others.

A.10.3.4.3.1 See 13.4.3.2.2.1.

A.11.2.5 Directional-type foam-water discharge devices are quite often located in heavy traffic areas and are more apt to be dislocated compared to ordinary sprinkler locations. Of particular concern are low-level discharge devices in loading racks in and around low-level tankage and monitor-mounted devices that have been pushed out of the way for convenience. Inspection frequency might have to be increased accordingly.

A.11.2.5.4 Discharge devices are listed or approved for particular foam concentrates.

A.11.2.6.2 Water supply piping should be free of internal obstructions that can be caused by debris (e.g., rocks, mud, tubercles) or by closed or partially closed control valves. See Chapter 5 for inspection and maintenance requirements.

A.11.2.9 Proportioning systems might or might not include foam concentrate pumps. If pumps are part of the proportioning system, the driver, pump, and gear reducer should be checked in accordance with the manufacturer's recommendations, and the check can include items such as lubrication, fuel, filters, oil levels, and clutches.

A.11.2.9.4 In some cases, an adequate supply of foam liquid is available without a full tank. This is particularly true of foam liquid stored in nonmetallic tanks. If liquid is stored in metallic tanks, the proper liquid level should be one-half the distance into the expansion dome.

A.11.2.9.5.1 The standard pressure proportioner is a pressure vessel. Although under normal standby conditions this type of proportioning system should not be pressurized, some installations allow for inadvertent pressurization. Pressure should be removed before inspection.

A.11.2.9.5.2 The bladder tank proportioner is a pressure vessel. Where inspecting for a full liquid tank, the manufacturer's instructions should be followed. If checked incorrectly, the tank sight gauges could indicate a full tank when the tank actually is empty of foam liquid. Some foam liquids, due to their viscosity, might not indicate true levels of foam liquid in the tank where checked via the sight glass.

> **CAUTION:** Depending on system configuration, this type of proportioner system might be pressurized or nonpressurized under normal conditions. Pressure should be removed before inspection.

A.11.2.9.5.3(1) See 11.2.7.1.

A.11.2.9.5.3(2) See Figure A.3.3.26.

A.11.2.9.5.4(1) See 11.2.7.1.

A.11.2.9.5.4(2) See Figure A.3.3.26.

A.11.2.9.5.5(1) See 11.2.7.1.

A.11.2.9.5.5(2) See Figure A.3.3.26.

A.11.2.9.5.6(1) See 11.2.7.1.

A.11.2.9.5.6(2) See Figure A.3.3.26.

A.11.3 Operational tests generally should be comprised of the following:

(1) A detection/actuation test with no flow to verify that all components such as automated valves, foam and water pumps, and alarms operate properly
(2) A water-only flow test to check piping continuity, discharge patterns, pressures, and line flushing
(3) A foam flow test to verify solution concentration
(4) Resetting of system to its normal standby condition, including draining of lines and filling of foam liquid tank

A.11.3.1 The property owner's representative should take care to prevent damage to equipment or the structure during the test. Damage could be caused by the system discharge or by runoff from the test site. It should be verified that there is adequate and unobstructed drainage. Equipment should be removed or covered as necessary to prevent damage. Means such as curbing or sandbagging should be used to prevent entry of the foam-water solution.

A.11.3.2 An alternative method for achieving flow can be permitted to be an installation as shown in Figure A.11.3.2. This type of testing does not verify system pipe conditions or discharge device performance but only the water supply, foam concentrate supply, and proportioning accuracy.

A.11.3.2.7 Specific foam concentrates typically are listed or approved with specific sprinklers. Part of the approval and listing is a minimum sprinkler operating pressure. Sprinkler operating pressure affects foam quality, discharge patterns, and fire extinguishment (control) capabilities. Discharge pressures less than this specified minimum pressure should be corrected immediately; therefore, it is necessary to test under full flow conditions.

A.11.4 The maintenance items specified in the body of this standard are in addition to the typical inspection and test procedures indicated. Foam-water systems are, as are all fire protection systems, designed to be basically maintenance free. There are, however, some areas that need special attention. Foam concentrate shelf life varies between liquids and is affected by factors such as heat, cold, dilution, contamination, and many others. As with all systems, common sense dictates those maintenance-sensitive areas that should be given attention. Routine testing and inspection generally dictate the need for additional maintenance items. Those maintenance items specified are key procedures that should be performed routinely.

A.11.4.3.2 Foam concentrates tend to settle out over time. Depending on the specific characteristics of the foam concentrate, sedimentation accumulates in the bottom of the storage vessel. This sediment can affect proportioning and foam concentrate integrity. Some concentrates tend to settle out more rapidly than others. If the annual samples indicate excessive sediment, flushing the tank could be required more frequently.

A.11.4.4.2 Where hydrostatically testing bladder tanks, the generation of a pressure differential across the diaphragm should not be allowed. The manufacturer should be consulted for specific procedures.

A.12.2.4 If differences indicate a significant change or deterioration in performance, appropriate maintenance actions should be taken to restore the component or system to its original performance. [**750:**13.2.4]

Copyright National Fire Protection Association
Provided by IHS under license with NFPA
No reproduction or networking permitted without license from IHS
Not for Resale

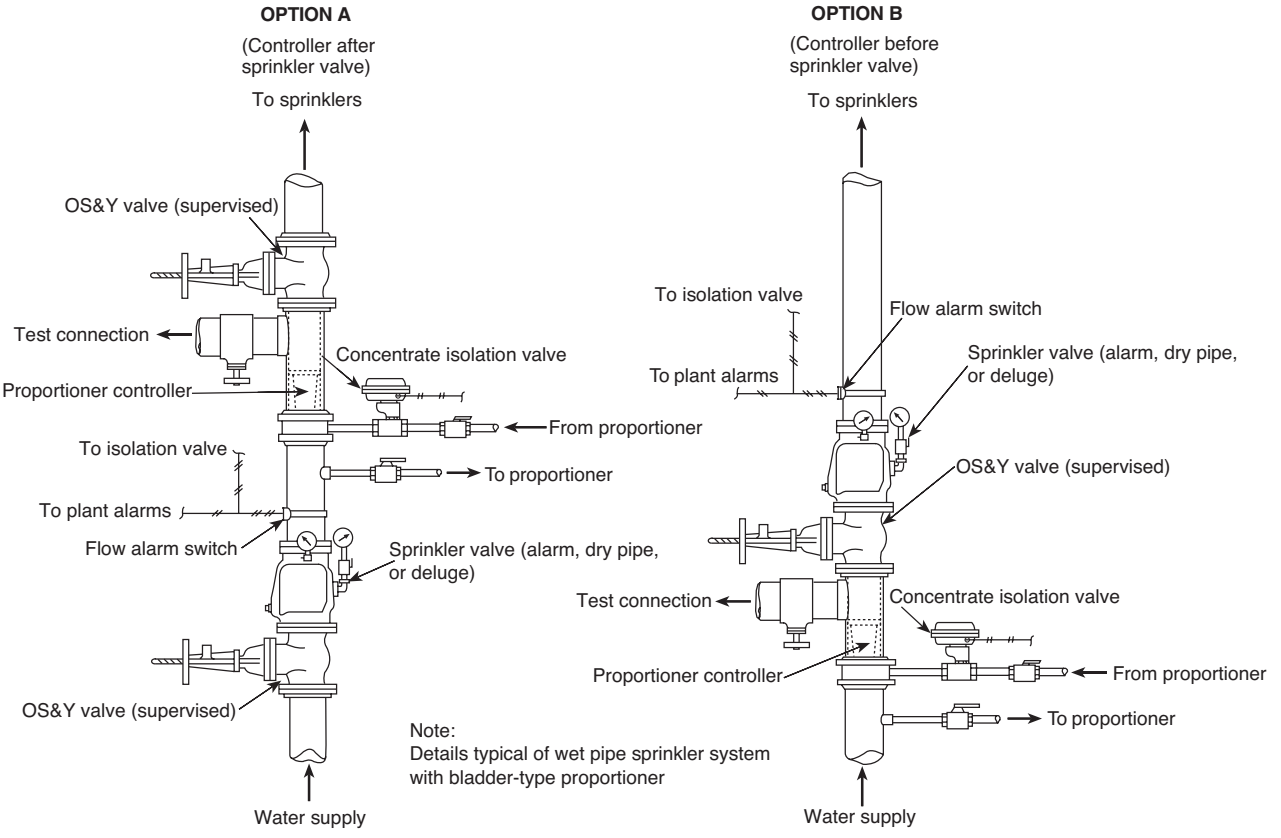

FIGURE A.11.3.2 Foam System/Test Header Combination.

A.12.3.10 The representative sample should include 10 percent of the water mist nozzles in the activated zone. If contamination of filters or strainers is found on inspection, it is recommended that all nozzles within the activated zone be inspected. [**750:** A.13.3.10]

A.13.1 *Alarm Valves.* Alarm valves are installed in water-based fire protection systems to sound a fire alarm when a flow of water from the system equals or exceeds the flow of a single discharge device. A retarding chamber, which minimizes false alarms due to surges and fluctuating water supply pressure, can be supplied with the alarm valve.

Backflow Prevention Devices. Backflow prevention devices are used to prevent water in a fire protection system from entering the public water supply due to a reverse flow of water, thermal expansion, hydraulic shock, back pressure, or back siphonage. *[See Figure A.13.1(a).]*

Ball Valves. Ball valves are manually operated through their full range of open to closed positions with a one-quarter turn.

Butterfly Valves. Butterfly valves are water supply control valves with gear operators to assist in opening and closing. Butterfly valves can be of the wafer or grooved-end type. *[See Figure A.13.1(b).]*

Check Valves. Check valves allow water flow in one direction only. *[See Figure A.13.1(c).]*

DCA. A double check assembly (DCA) consists of two independently operating spring-loaded check valves. The assembly includes two resilient-seated isolation valves and four test cocks required for testing.

DCDA. A double check detector assembly (DCDA) is hydraulically balanced to include a metered bypass assembly to detect system leakage. The main valve assembly and bypass assembly afford equal levels of backflow prevention and are each equipped with two resilient-seated isolation valves and four test cocks required for testing.

Deluge Valves. Deluge valves hold water at the valve until actuated by the operation of a detection system or manual release. *[See Figure A.13.1(d).]*

Drip Valves. Drip valves automatically drain condensation or small amounts of water that have leaked into system piping or valves. Drip valves close when exposed to system pressure.

Dry Pipe Valves. Dry pipe valves control the flow of water to areas that could be exposed to freezing conditions. Water is held at the valve by air pressure in the system piping. When the air pressure is reduced, the valve operates and floods the system. *[See Figure A.13.1(e) and Figure A.13.1(f).]*

Indicating Valves. Indicating valves provide a dependable, visible indication of the open position, even at a distance.

Indicator Posts. Indicator posts include wall and underground types and are intended for use in operating inside screwed pattern gate valves and for indicating the position of the gates in the valves. *[See Figure A.13.1(g).]*

--`,,```,,,,````-`-`,,`,,`,`,,`---

Copyright National Fire Protection Association
Provided by IHS under license with NFPA
No reproduction or networking permitted without license from IHS
Not for Resale

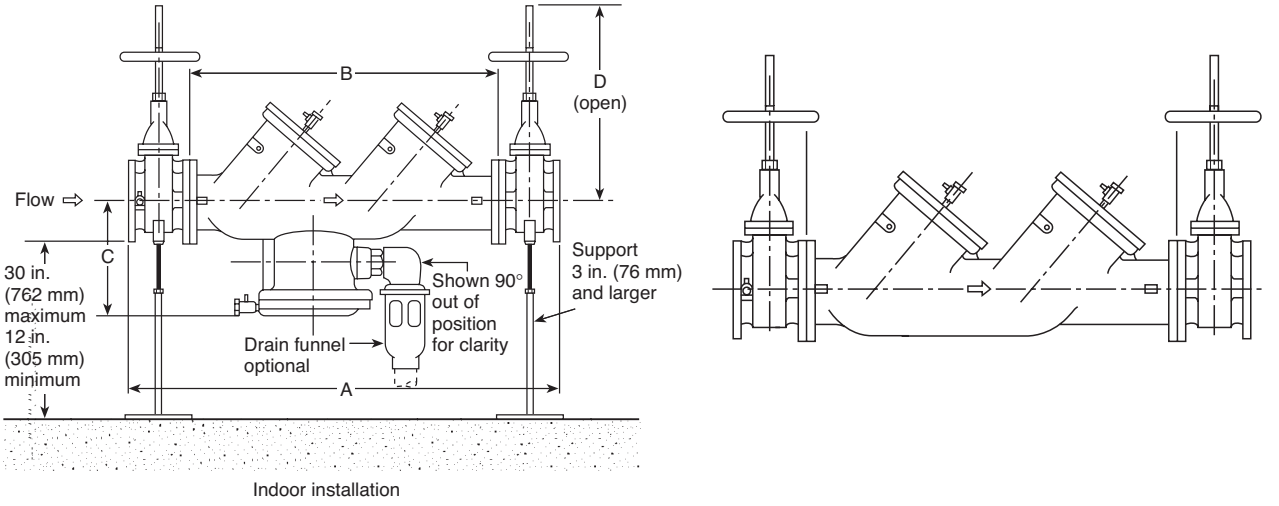

FIGURE A.13.1(a) Reduced Pressure Backflow Preventers (left) and Double Check Valve Assemblies (right).



FIGURE A.13.1(b) Butterfly Post Indicator Valve. ***(Courtesy of Henry Pratt Co.)***

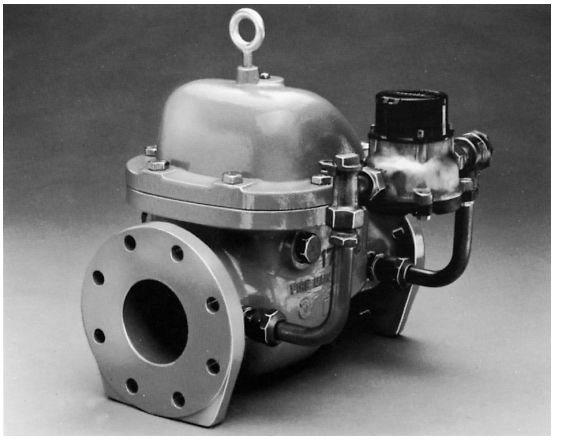

FIGURE A.13.1(c) Detector Check Valve.

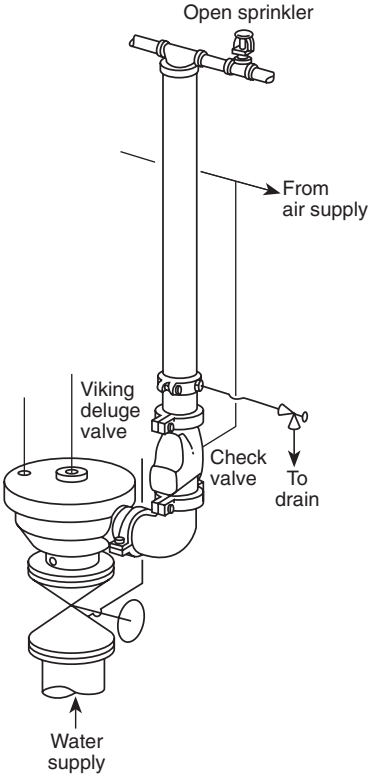

FIGURE A.13.1(d) Deluge Valve.

Copyright National Fire Protection Association
Provided by IHS under license with NFPA
No reproduction or networking permitted without license from IHS
Not for Resale

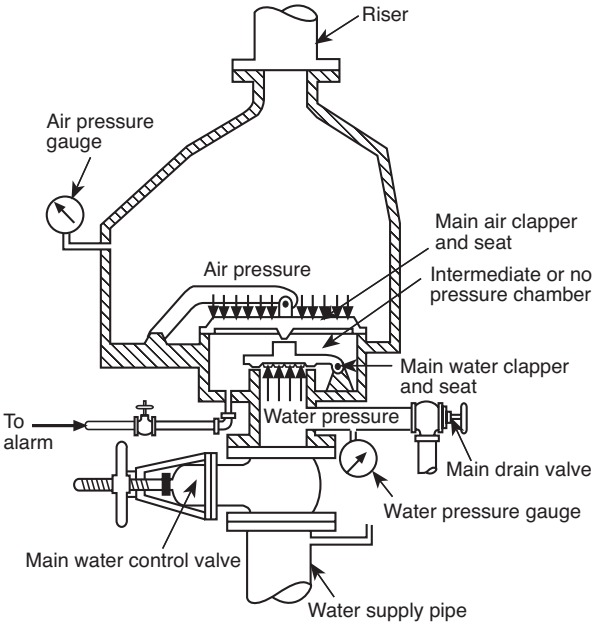

FIGURE A.13.1(e) Dry Pipe Valve.

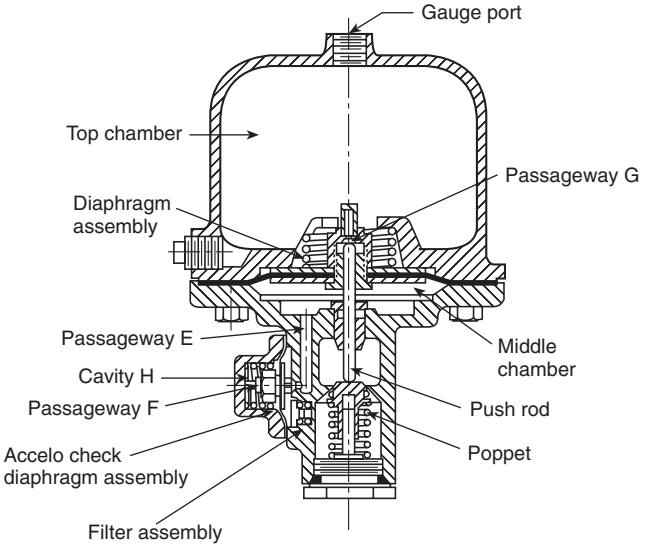

FIGURE A.13.1(f) Dry Pipe System Accelerator. ***(Courtesy of Reliable Automatic Sprinkler Co.)***

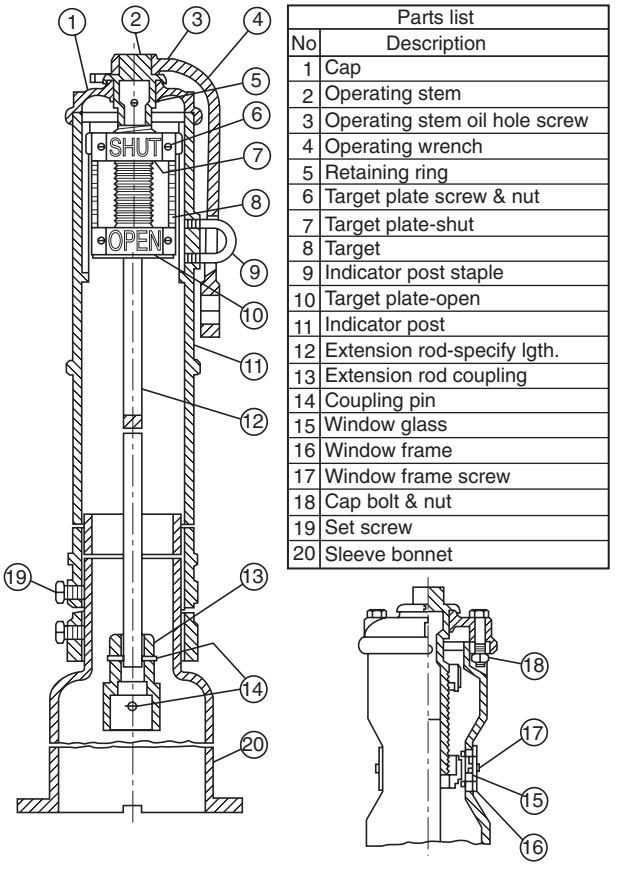

Parts list	
No	Description
1	Cap
2	Operating stem
3	Operating stem oil hole screw
4	Operating wrench
5	Retaining ring
6	Target plate screw & nut
7	Target plate-shut
8	Target
9	Indicator post staple
10	Target plate-open
11	Indicator post
12	Extension rod-specify lgth.
13	Extension rod coupling
14	Coupling pin
15	Window glass
16	Window frame
17	Window frame screw
18	Cap bolt & nut
19	Set screw
20	Sleeve bonnet

FIGURE A.13.1(g) Vertical Indicator Post.

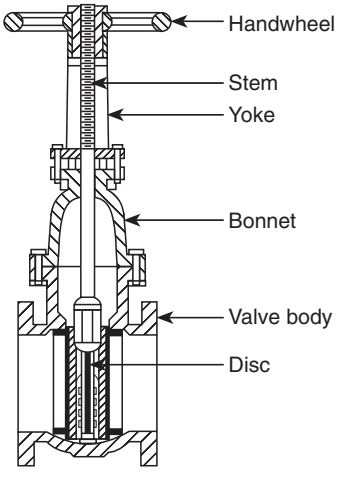

FIGURE A.13.1(h) OS&Y Gate Valve.

NRS Gate Valves, OS&Y Gate Valves. Nonrising stem (NRS) gate valves are used underground with indicator posts attached or as roadway box valves (curb-box installation). Outside screw and yoke (OS&Y) gate valves are used indoors and in pits outdoors. The valve stem moves out when the valve is open and moves in when it is closed. The stem indicates the position of the valve. *[See Figure A.13.1(h) and Figure A.13.1(i).]*

RPA. A reduced-pressure zone principle assembly (RPA) consists of two independently spring-loaded check valves separated by a differential-sensing valve. The differential-sensing valve includes a relief port to atmosphere that discharges excess water resulting from supply system fluctuations. The assembly includes two resilient-seated isolation valves and four test cocks required for testing.

RPDA. A reduced-pressure detector assembly (RPDA) is hydraulically balanced to include a metered bypass assembly to detect system leakage. The main valve assembly and bypass assembly afford equal levels of backflow prevention, and each

Copyright National Fire Protection Association
Provided by IHS under license with NFPA
No reproduction or networking permitted without license from IHS
Not for Resale

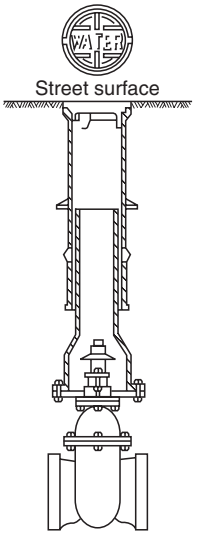

FIGURE A.13.1(i) Nonindicating-Type Gate Valve.

assembly is equipped with two resilient-seated isolation valves and four test cocks required for testing.

Strainers. Strainers are used for protection against clogging of water discharge openings.

Waterflow Detector Check Valves. Detector-type check valves allow flow in one direction only and have provisions for the connection of a bypass meter around the check valve. *[See Figure A.13.1(c).]*

A.13.2.3 The valves are not required to be exposed. Doors, removable panels, or valve pits can be permitted to satisfy this requirement. Such equipment should not be obstructed by features such as walls, ducts, columns, direct burial, or stock storage.

A.13.2.5 Main drains are installed on system risers for one principal reason: to drain water from the overhead piping after the system is shut off. This allows the contractor or plant maintenance department to perform work on the system or to replace nozzles after a fire or other incident involving system operation.

The test for standpipe systems should be done at the low-point drain for each standpipe or the main drain test connection where the supply main enters the building.

These drains also are used to determine whether there is a major reduction in waterflow to the system, such as could be caused by a major obstruction, a dropped gate, a valve that is almost fully closed, or a check valve clapper stuck to the valve seat.

A large drop in the full flow pressure of the main drain (as compared to previous tests) normally is indicative of a dangerously reduced water supply caused by a valve in an almost fully closed position or other type of severe obstruction. After closing the drain, a slow return to normal static pressure is confirmation of the suspicion of a major obstruction in the waterway and should be considered sufficient reason to determine the cause of the variation.

A satisfactory drain test (i.e., one that reflects the results of previous tests) does not necessarily indicate an unobstructed passage, nor does it prove that all valves in the upstream flow of water are fully opened. The performance of drain tests is not a substitute for a valve check on 100 percent of the fire protection valving.

The main drain test is conducted in the following manner:

(1) Record the pressure indicated by the supply water gauge.
(2) Close the alarm control valve on alarm valves.
(3) Fully open the main drain valve.
(4) After the flow has stabilized, record the residual (flowing) pressure indicated by the water supply gauge.
(5) Close the main drain valve slowly.
(6) Record the time taken for the supply water pressure to return to the original static (nonflowing) pressure.
(7) Open the alarm control valve.

A.13.3.1 Signs identifying underground fire service main control valves in roadway boxes should indicate the direction of valve opening, the distance and direction of the valve from the sign location (if the valve is subject to being covered by snow or ice), and the location of the wrench if not located with the sign.

A.13.3.1.2 Valves that normally are closed during cold weather should be removed and replaced with devices that provide continuous fire protection service.

A.13.3.2.2 Valves should be kept free of snow, ice, storage, or other obstructions so that access is ensured.

A.13.3.2.2(2) The purpose of the valve sealing program is as follows:

(1) The presence of a seal on a control valve is a deterrent to closing a valve indiscriminately without obtaining the proper authority.
(2) A broken or missing seal on a valve is cause for the plant inspector to verify that protection is not impaired and to notify superiors of the fact that a valve could have been closed without following procedures.

A.13.3.3.2 These "spring tests" are made to verify that a post indicator valve is fully open. If an operator feels the valve is fully open, he or she should push in the "open" direction. The handle usually moves a short distance (approximately a one-quarter turn) and "springs" back toward the operator in a subtle move when released. This spring occurs when the valve gate pulls up tight against the top of its casting and the valve shaft (being fairly long) twists slightly. The spring indicates that the valve is fully opened and that the gate is attached to the handle. If the gate is jammed due to a foreign particle, the handle is not likely to spring back. If the gate is loose from the handle, the handle continues to turn in the "open" direction with little resistance.

A.13.3.3.5 For further information, see *NFPA 72, National Fire Alarm Code.*

A.13.4.1.1 A higher pressure reading on the system gauge is normal in variable pressure water supplies. Pressure over 175 psi (12.1 bar) can be caused by fire pump tests or thermal expansion and should be investigated and corrected.

A.13.4.1.2 The system should be drained for internal inspection of valve components as follows:

(1) Close the control valve.
(2) Open the main drain valve.
(3) Open the inspector's test valve.
(4) Wait for the sound of draining water to cease and for all gauges to indicate 0 psi (0 bar) before removing the handhole cover or dismantling any component.

A.13.4.3.2.1 High priming water levels can adversely affect the operation of supervisory air. Test the water level as follows:

Copyright National Fire Protection Association
Provided by IHS under license with NFPA
No reproduction or networking permitted without license from IHS
Not for Resale

(1) Open the priming level test valve.
(2) If water flows, drain it.
(3) Close the valve when water stops flowing and air discharges.
(4) If air discharges when the valve is opened, the priming water level could be too low. To add priming water, refer to the manufacturer's instructions.

A.13.4.3.2.2 Preaction and deluge valves in areas subject to freezing should be trip tested in the spring to allow time before the onset of cold weather for all water that has entered the system or condensation to drain to low points or back to the valve.

A.13.4.3.2.2.1 Full flow tests should incorporate full functionality of the system as a unit, including automatic detection and manual activation.

A.13.4.3.2.11 Methods of recording maintenance include tags attached at each riser, records retained at each building, and records retained at one building in a complex.

A.13.4.3.3.3 Suitable facilities should be provided to dispose of drained water. Low points equipped with a single valve should be drained as follows:

(1) Open the low-point drain valve slowly.
(2) Close the drain valve as soon as water ceases to discharge, and allow time for additional accumulation above the valve.
(3) Repeat this procedure until water ceases to discharge.
(4) Replace plug or nipple and cap as necessary.

Low points equipped with dual valves should be drained as follows:

(1) Close the upper valve.
(2) Open the lower valve, and drain the accumulated water.
(3) Close the lower valve, open the upper valve, and allow time for additional water accumulation.
(4) Repeat this procedure until water ceases to discharge.
(5) Replace plug or nipple and cap in lower valve.

A.13.4.4.1.2.3 A conflict in pressure readings could indicate an obstructed orifice or a leak in the isolated chamber of the quick-opening device, either of which could make the quick-opening device inoperative.

A.13.4.4.2.1 High priming water levels can affect the operation of supervisory air or nitrogen pressure maintenance devices. Test the water level as follows:

(1) Open the priming level test valve.
(2) If water flows, drain it.
(3) Close the valve when water stops flowing and air discharges.
(4) If air discharges when the valve is opened, the priming water level could be too low. To add priming water, refer to the manufacturer's instructions.

A.13.4.4.2.2 Dry pipe valves should be trip tested in the spring to allow time before the onset of cold weather for all water that has entered the system or condensation to drain to low points or back to the valve.

A.13.4.4.2.2.2 A full flow trip test generally requires at least two individuals, one of whom is situated at the dry pipe valve while the other is at the inspector's test. If possible, they should be in communication with each other. A full flow trip test is conducted as follows:

(1) The main drain valve is fully opened to clean any accumulated scale or foreign material from the supply water piping. The main drain valve then is closed.
(2) The system air or nitrogen pressure and the supply water pressure are recorded.
(3) The system air or nitrogen pressure is relieved by opening the inspector's test valve completely. Concurrent with opening the valve, both testers start their stopwatches. If two-way communication is not available, the tester at the dry valve is to react to the start of downward movement on the air pressure gauge.
(4) Testers at the dry pipe valve note the air pressure at which the valve trips and note the tripping time.
(5) Testers at the inspector's test note the time at which water flows steadily from the test connection. This time is noted for comparison purposes to previous tests and is not meant to be a specific pass/fail criterion. Note that NFPA 13, *Standard for the Installation of Sprinkler Systems*, does not require water delivery in 60 seconds for all systems.
(6) When clean water flows, the test is terminated by closing the system control valve.
(7) The air or nitrogen pressure and the time elapsed are to be recorded as follows:
    (a) From the complete opening of the test valve to the tripping of the valve
    (b) From the complete opening of inspector's valve to the start of steady flow from the test connection
(8) All low-point drains are opened and then closed when water ceases to flow.
(9) The dry pipe valve and quick-opening device are reset, if installed, in accordance with the manufacturer's instructions, and the system is returned to service.

For dry pipe systems that were designed and installed using either a manual demonstration or a computer calculation to simulate multiple openings to predict water delivery time, a full flow trip test from a single inspector's test connection should have been conducted during the original system acceptance and a full flow trip test from the single inspector's test should continue to be conducted every 3 years. The system is not required to achieve water delivery to the inspector's test connection in 60 seconds, but comparison to the water delivery time during the original acceptance will determine if there is a problem with the system.

A.13.4.4.2.2.3 A partial flow trip test is conducted in the following manner:

(1) Fully open the main drain valve to clean any accumulated scale or foreign material from the supply water piping.
(2) Close the control valve to the point where additional closure cannot provide flow through the entire area of the drain outlet.
(3) Close the valve controlling flow to the device if a quick-opening device is installed.
(4) Record the system air or nitrogen pressure and the supply water pressure.
(5) Relieve system air or nitrogen pressure by opening the priming level test valve.
(6) Note and record the air or nitrogen pressure and supply water pressure when the dry pipe valve trips.
(7) Immediately close the system control valve, and open the main drain valve to minimize the amount of water entering the system piping.
(8) Trip test the quick-opening device, if installed, in accordance with the manufacturer's instructions.

Copyright National Fire Protection Association
Provided by IHS under license with NFPA
No reproduction or networking permitted without license from IHS
Not for Resale

(9) Open all low point drains; close when water ceases to flow.
(10) Reset the dry pipe valve and quick-opening device, if installed, in accordance with the manufacturer's instructions and return the system to service.

CAUTION: A partial flow trip test does not provide a high enough rate of flow to latch the clappers of some model dry pipe valves in the open position. When resetting such valves, check that the latching equipment is operative.

A.13.4.4.2.4 Except when a full flow trip test is conducted in accordance with A.13.4.4.2.2.2, a quick-opening device should be tested in the following manner:

(1) Close the system control valve.
(2) Open the main drain valve, and keep it in the open position.
(3) Verify that the quick-opening device control valve is open.
(4) Open the inspector's test valve. A burst of air from the device indicates that it has tripped.
(5) Close the device's control valve.
(6) Return the device to service in accordance with the manufacturer's instructions, and return the system to service.

A.13.4.4.3.2 A quick-opening device, if installed, should be removed temporarily from service prior to draining low points.

A.13.5.1.2 The sectional drain valve should be opened to compare the results with the original installation or acceptance tests.

A.13.5.2.2 PRV devices can be bench tested in accordance with the manufacturer's instructions or tested in place. To test in place, a gauge is connected on both the inlet side and the outlet side of the device, and flow readings are taken using a Pitot tube or a flowmeter. Water is discharged through a roof manifold, if available, or through hose to the exterior of the building. Another acceptable method for systems having at least two risers is to take one standpipe out of service and use it as a drain by removing PRV devices and attaching hoses at the outlets near the ground floor level. When testing in this manner, a flowmeter should be used and a hose line utilized to connect the riser being tested and the drain riser.

Readings are to be compared to the system's hydraulic demands at the test location. Field-adjustable valves are to be reset in accordance with manufacturer's instructions. Nonadjustable valves should be replaced. Extreme caution should be exercised because of the high pressure involved when testing.

A.13.5.4.1 When the PRV is located in or immediately downstream of the fire pump discharge, the weekly inspection of the master PRV can be performed during the weekly fire pump operating test.

A.13.5.4.1(1) Pressures downstream of the master PRV should not exceed the maximum pressure rating of the system components.

A.13.5.4.2 The partial flow test of the master PRV can be performed during the quarterly main drain test. *(See 13.2.5.1.)*

A.13.5.4.3 When the PRV is located in the fire pump discharge, the full flow test of the master PRV can be performed during the annual fire pump flow test.

A.13.5.6.2.1 Hose valves can be tested without a full flow if the cap is left on the hose threads. The purpose of this requirement is to exercise the valve so it can be operated easily.

A.13.5.6.2.2 See A.13.5.6.2.1.

A.13.6.1.2 Intermittent discharge from a differential-sensing valve relief port is normal. Continuous discharge is a sign of malfunction of either or both of the check valves, and maintenance is necessary.

A.13.6.2.1.1 The full flow test of the backflow prevention valve can be performed with a test header or other connections downstream of the valve. A bypass around the check valve in the fire department connection line with a control valve in the normally closed position can be an acceptable arrangement. When flow to a visible drain cannot be accomplished, closed loop flow can be acceptable if a flowmeter or sight glass is incorporated into the system to ensure flow.

The tests required by 13.6.2 typically test only for operation of the device under backflow conditions. Forward-flow test conditions are required by other portions of this standard.

A.14.2 For obstruction investigation and prevention, see Annex D.

A.14.2.2 For obstruction investigation procedures, see Section D.3. The type of obstruction investigation should be appropriately selected based on the observed condition. For instance, ordering an internal obstruction investigation would be inappropriate where the observed condition was broken public mains in the vicinity. On the other hand, such an investigation would be appropriate where foreign materials are observed in the dry pipe valve.

A.14.2.3 For obstruction prevention program recommendations, see Section D.4.

A.14.2.4 For obstruction investigation flushing procedures, see Section D.5.

A.15.3.1 A clearly visible tag alerts building occupants and the fire department that all or part of the water-based fire protection system is out of service. The tag should be weather resistant, plainly visible, and of sufficient size [typically 4 in. × 6 in. (100 mm × 150 mm)]. The tag should identify which system is impaired, the date and time impairment began, and the person responsible. Figure A.15.3.1 illustrates a typical impairment tag.

A.15.3.2 An impairment tag should be placed on the fire department connection to alert responding fire fighters of an abnormal condition. An impairment tag that is located on the system riser only could go unnoticed for an extended period if fire fighters encounter difficulty in gaining access to the building or sprinkler control room.

A.15.5 The need for temporary fire protection, termination of all hazardous operations, and frequency of inspections in the areas involved should be determined. All work possible should be done in advance to minimize the length of the impairment. Where possible, temporary feedlines should be used to maintain portions of systems while work is completed.

Water-based fire protection systems should not be removed from service when the building is not in use. Where a system that has been out of service for a prolonged period, such as in the case of idle or vacant properties, is returned to service, qualified personnel should be retained to inspect and test the systems.

A.15.5.2(3)(b) A fire watch should consist of trained personnel who continuously patrol the affected area. Ready access to fire extinguishers and the ability to promptly notify the fire department are important items to consider. During the patrol of the area, the person should not only be looking for fire, but making sure that the other fire protection features of the building such as egress routes and alarm systems are available and functioning properly.

Copyright National Fire Protection Association
Provided by IHS under license with NFPA
No reproduction or networking permitted without license from IHS
Not for Resale

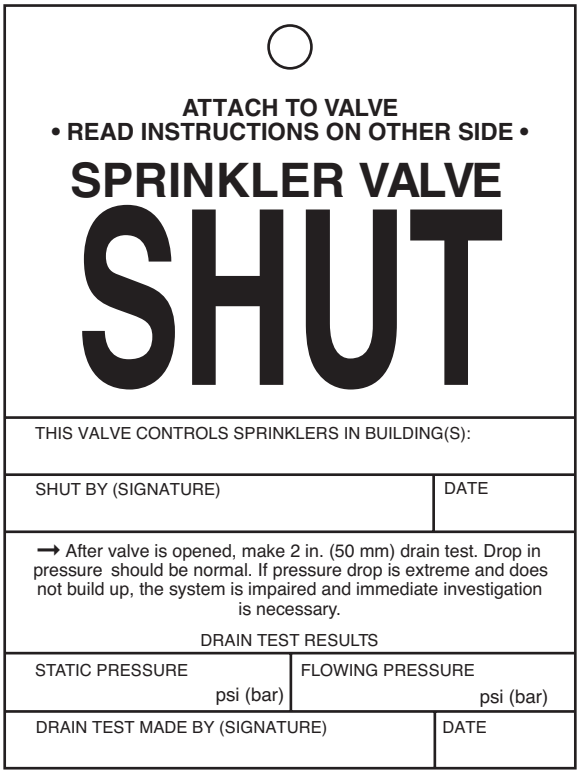

FIGURE A.15.3.1 Sample Impairment Tag.

A.15.5.2(3)(c) Temporary water supplies are possible from a number of sources including use of a large-diameter hose from a fire hydrant to a fire department connection, use of a portable tank and a portable pump, or use of a standby fire department pumper and/or tanker.

A.15.5.2(3)(d) Depending on the use and occupancy of the building, it could be enough in some circumstances to stop certain processes in the building or to cut off the flow of fuel to some machines. It is also helpful to implement "No Smoking" and "No Hot Work" (cutting, grinding, or welding) policies while the system is out of service because these activities are responsible for many fire ignitions.

Annex B Forms for Inspection, Testing, and Maintenance

This annex is not a part of the requirements of this NFPA document but is included for informational purposes only.

B.1 Forms need to be complete with respect to the requirements of NFPA 25 for the system being inspected, tested, or maintained, or any combination thereof. Because water-based fire protection systems are comprised of many components, it could be necessary to complete more than one form for each system.

Authorities having jurisdiction are legitimately concerned that the forms used are comprehensive. Therefore, they could develop their own forms or utilize those already developed and reviewed by their jurisdiction.

At least five formats can be used and are described as follows:

(1) One form in which all requirements for NFPA 25 are specified and large sections of information do not apply to most systems
(2) Individual forms that provide requirements corresponding to each chapter of NFPA 25 and address the following:
   (a) Sprinkler systems
   (b) Standpipe systems
   (c) Private fire service mains
   (d) Fire pumps
   (e) Storage tanks
   (f) Water spray systems
   (g) Foam-water sprinkler systems
(3) Forms that include information from the specific system chapter: Chapter 1, Chapter 13, and Chapter 14
(4) A series of forms similar to option (2) but with a more detailed breakdown of system types. For example, fire sprinkler systems are divided into five separate forms such as:
   (a) Wet pipe fire sprinkler systems
   (b) Dry pipe fire sprinkler systems
   (c) Preaction fire sprinkler systems
   (d) Deluge fire sprinkler systems
   (e) Foam-water sprinkler systems
(5) Separate forms for each individual component of each fire protection system

B.2 Sample forms are available for downloading at www.nfpa.org, www.nfsa.org, and www.sprinklernet.org.

Annex C Possible Causes of Pump Troubles

This annex is not a part of the requirements of this NFPA document but is included for informational purposes only.

This annex is extracted from NFPA 20, *Standard for the Installation of Stationary Pumps for Fire Protection.*

C.1 Causes of Pump Troubles. This annex contains a partial guide for locating pump troubles and their possible causes *(see Figure C.1)*. It also contains a partial list of suggested remedies. *(For other information on this subject, see Hydraulic Institute Standard for Centrifugal, Rotary and Reciprocating Pumps.)* The causes listed here are in addition to possible mechanical breakage that would be obvious on visual inspection. In case of trouble, it is suggested that those troubles that can be checked easily should be corrected first or eliminated as possibilities.

C.1.1 Air Drawn into Suction Connection Through Leak(s). Air drawn into suction line through leaks causes a pump to lose suction or fail to maintain its discharge pressure. Uncover suction pipe and locate and repair leak(s).

C.1.2 Suction Connection Obstructed. Examine suction intake, screen, and suction pipe and remove obstruction. Repair or provide screens to prevent recurrence.

C.1.3 Air Pocket in Suction Pipe. Air pockets cause a reduction in delivery and pressure similar to an obstructed pipe. Uncover suction pipe and rearrange to eliminate pocket.

C.1.4 Well Collapsed or Serious Misalignment. Consult a reliable well drilling company and the pump manufacturer regarding recommended repairs.

C.1.5 Stuffing Box Too Tight or Packing Improperly Installed, Worn, Defective, Too Tight, or of Incorrect Type. Loosen gland swing bolts and remove stuffing box gland halves. Replace packing.

C.1.6 Water Seal or Pipe to Seal Obstructed. Loosen gland swing bolt and remove stuffing box gland halves along with the water seal ring and packing. Clean the water passage to

Copyright National Fire Protection Association
Provided by IHS under license with NFPA
No reproduction or networking permitted without license from IHS
Not for Resale

Fire pump troubles	Suction				Pump															Driver and/or Pump					Driver						
	Air drawn into suction connection through leak(s)	Suction connection obstructed	Air pocket in suction pipe	Well collapsed or serious misalignment	Stuffing box too tight or packing improperly installed, worn, defective, too tight, or incorrect type	Water seal or pipe to seal obstructed	Air leak into pump through stuffing boxes	Impeller obstructed	Wearing rings worn	Impeller damaged	Wrong diameter impeller	Actual net head lower than rated	Casing gasket defective, permitting internal leakage (single-stage and multistage pumps)	Pressure gauge is on top of pump casing	Incorrect impeller adjustment (vertical shaft turbine-type pump only)	Impellers locked	Pump is frozen	Pump shaft or shaft sleeve scored, bent, or worn	Pump not primed	Seal ring improperly located in stuffing box, preventing water from entering space to form seal	Excess bearing friction due to lack of lubrication, wear, dirt, rusting, failure, or improper installation	Rotating element binds against stationary element	Pump and driver misaligned	Foundation not rigid	Engine-cooling system obstructed	Faulty driver	Lack of lubrication	Speed too low	Wrong direction of rotation	Speed too high	Rated motor voltage different from line voltage	Faulty electrical circuit, obstructed fuel system obstructed steam pipe, or dead battery
	1	2	3	4	5	6	7	8	9	10	11	12	13	14	15	16	17	18	19	20	21	22	23	24	25	26	27	28	29	30	31	32
Excessive leakage at stuffing box					X													X					X								
Pump or driver overheats				X	X	X		X			X				X			X	X	X	X	X	X	X	X		X		X	X	X	
Pump unit will not start				X	X										X	X	X				X					X	X					X
No water discharge	X	X	X					X											X													
Pump is noisy or vibrates				X	X			X		X								X			X	X	X	X			X					
Too much power required				X	X			X	X		X		X		X			X			X	X	X	X			X		X	X	X	
Discharge pressure not constant for same gpm	X				X	X	X																									
Pump loses suction after starting	X	X	X			X	X													X												
Insufficient water discharge	X	X	X			X	X	X	X	X	X	X	X		X													X	X		X	
Discharge pressure too low for gpm discharge	X	X	X		X	X	X	X	X	X	X	X	X	X														X	X		X	

FIGURE C.1 Possible Causes of Fire Pump Troubles.

and in the water seal ring. Replace water seal ring, packing gland, and packing in accordance with manufacturer's instructions.

C.1.7 Air Leak into Pump Through Stuffing Boxes. Same as possible cause in C.1.6.

C.1.8 Impeller Obstructed. Does not show on any one instrument, but pressures fall off rapidly when an attempt is made to draw a large amount of water.

For horizontal split-case pumps, remove upper case of pump and remove obstruction from impeller. Repair or provide screens on suction intake to prevent recurrence.

For vertical shaft turbine-type pumps, lift out column pipe and pump bowls from wet pit or well and disassemble pump bowl to remove obstruction from impeller.

For close-coupled, vertical in-line pumps, lift motor on top pull-out design and remove obstruction from impeller.

C.1.9 Wearing Rings Worn. Remove upper case and insert feeler gauge between case wearing ring and impeller wearing ring. Clearance when new is 0.0075 in. (0.19 mm). Clearances of more than 0.015 in. (0.38 mm) are excessive.

C.1.10 Impeller Damaged. Make minor repairs or return to manufacturer for replacement. If defect is not too serious, order new impeller and use damaged one until replacement arrives.

C.1.11 Wrong Diameter Impeller. Replace with impeller of proper diameter.

C.1.12 Actual Net Head Lower Than Rated. Check impeller diameter and number and pump model number to make sure correct head curve is being used.

Copyright National Fire Protection Association
Provided by IHS under license with NFPA
No reproduction or networking permitted without license from IHS
Not for Resale

C.1.13 Casing Gasket Defective, Permitting Internal Leakage (Single-Stage and Multistage Pumps). Replace defective gasket. Check manufacturer's drawing to see whether gasket is required.

C.1.14 Pressure Gauge Is on Top of Pump Casing. Place gauges in correct location.

C.1.15 Incorrect Impeller Adjustment (Vertical Shaft Turbine-Type Pump Only). Adjust impellers according to manufacturer's instructions.

C.1.16 Impellers Locked. For vertical shaft turbine-type pumps, raise and lower impellers by the top shaft adjusting nut. If this adjustment is not successful, follow the manufacturer's instructions.

For horizontal split-case pumps, remove upper case and locate and eliminate obstruction.

C.1.17 Pump Is Frozen. Provide heat in the pump room. Disassemble pump and remove ice as necessary. Examine parts carefully for damage.

C.1.18 Pump Shaft or Shaft Sleeve Scored, Bent, or Worn. Replace shaft or shaft sleeve.

C.1.19 Pump Not Primed. If a pump is operated without water in its casing, the wearing rings are likely to seize. The first warning is a change in pitch of the sound of the driver. Shut down the pump.

For vertical shaft turbine-type pumps, check water level to determine whether pump bowls have proper submergence.

C.1.20 Seal Ring Improperly Located in Stuffing Box, Preventing Water from Entering Space to Form Seal. Loosen gland swing bolt and remove stuffing box gland halves along with the water-seal ring and packing. Replace, putting seal ring in proper location.

C.1.21 Excess Bearing Friction Due to Lack of Lubrication, Wear, Dirt, Rusting, Failure, or Improper Installation. Remove bearings and clean, lubricate, or replace as necessary.

C.1.22 Rotating Element Binds Against Stationary Element. Check clearances and lubrication and replace or repair the defective part.

C.1.23 Pump and Driver Misaligned. Shaft running off center because of worn bearings or misalignment. Align pump and driver according to manufacturer's instructions. Replace bearings according to manufacturer's instructions.

C.1.24 Foundation Not Rigid. Tighten foundation bolts or replace foundation if necessary.

C.1.25 Engine-Cooling System Obstructed. Heat exchanger or cooling water systems too small. Cooling pump faulty. Remove thermostats. Open bypass around regulator valve and strainer. Check regulator valve operation. Check strainer. Clean and repair if necessary. Disconnect sections of cooling system to locate and remove possible obstruction. Adjust engine-cooling water-circulating pump belt to obtain proper speed without binding. Lubricate bearings of this pump.

If overheating still occurs at loads up to 150 percent of rated capacity, contact pump or engine manufacturer so that necessary steps can be taken to eliminate overheating.

C.1.26 Faulty Driver. Check electric motor, internal combustion engine, or steam turbine, in accordance with manufacturer's instructions, to locate reason for failure to start.

C.1.27 Lack of Lubrication. If parts have seized, replace damaged parts and provide proper lubrication. If not, stop pump and provide proper lubrication.

C.1.28 Speed Too Low. For electric motor drive, check that rated motor speed corresponds to rated speed of pump, voltage is correct, and starting equipment is operating properly.

Low frequency and low voltage in the electric power supply prevent a motor from running at rated speed. Low voltage can be due to excessive loads and inadequate feeder capacity or (with private generating plants) low generator voltage. The generator voltage of private generating plants can be corrected by changing the field excitation. When low voltage is from the other causes mentioned, it can be necessary to change transformer taps or increase feeder capacity.

Low frequency usually occurs with a private generating plant and should be corrected at the source. Low speed can result in older type squirrel-cage-type motors if fastenings of copper bars to end rings become loose. The remedy is to weld or braze these joints.

For steam turbine drive, check that valves in steam supply pipe are wide open; boiler steam pressure is adequate; steam pressure is adequate at the turbine; strainer in the steam supply pipe is not plugged; steam supply pipe is of adequate size; condensate is removed from steam supply pipe, trap, and turbine; turbine nozzles are not plugged; and setting of speed and emergency governor is correct.

For internal combustion engine drive, check that setting of speed governor is correct; hand throttle is opened wide; and there are no mechanical defects such as sticking valves, timing off, or spark plugs fouled, and so forth. The latter can require the services of a trained mechanic.

C.1.29 Wrong Direction of Rotation. Instances of an impeller turning backward are rare but are clearly recognizable by the extreme deficiency of pump delivery. Wrong direction of rotation can be determined by comparing the direction in which the flexible coupling is turning with the directional arrow on the pump casing.

With polyphase electric motor drive, two wires must be reversed; with dc driver, the armature connections must be reversed with respect to the field connections. Where two sources of electrical current are available, the direction of rotation produced by each should be checked.

C.1.30 Speed Too High. See that pump- and driver-rated speed correspond. Replace electric motor with one of correct rated speed. Set governors of variable-speed drivers for correct speed. Frequency at private generating stations can be too high.

C.1.31 Rated Motor Voltage Different from Line Voltage. For example, a 220 or 440 V motor on 208 or 416 V line. Obtain motor of correct rated voltage or a larger size motor.

C.1.32 Faulty Electric Circuit, Obstructed Fuel System, Obstructed Steam Pipe, or Dead Battery. Check for break in wiring open switch, open circuit breaker, or dead battery. If circuit breaker in controller trips for no apparent reason, make sure oil is in dash pots in accordance with manufacturer's specifications. Make sure fuel pipe is clear, strainers are clean, and control valves open in fuel system to internal combustion engine. Make sure all valves are open and strainer is clean in steam line to turbine.

C.2 Warning. Chapters 6 and 7 of NFPA 20, *Standard for the Installation of Stationary Pumps for Fire Protection*, include electrical requirements that discourage the installation of discon-

Copyright National Fire Protection Association
Provided by IHS under license with NFPA
No reproduction or networking permitted without license from IHS
Not for Resale

nect means in the power supply to electric motor–driven fire pumps. This requirement is intended to ensure the availability of power to the fire pumps. When equipment connected to those circuits is serviced or maintained, the employee can have unusual exposure to electrical and other hazards. It can be necessary to require special safe work practices and special safeguards, personal protective clothing, or both.

C.3 Maintenance of Fire Pump Controllers After a Fault Condition.

C.3.1 Introduction. In a fire pump motor circuit that has been properly installed, coordinated, and in service prior to the fault, tripping of the circuit breaker or the isolating switch indicates a fault condition in excess of operating overload.

It is recommended that the following general procedures be observed by qualified personnel in the inspection and repair of the controller involved in the fault. These procedures are not intended to cover other elements of the circuit, such as wiring and motor, which can also require attention.

C.3.2 Caution. All inspections and tests are to be made on controllers that are de-energized at the line terminal, disconnected, locked out, and tagged so that accidental contact cannot be made with live parts and so that all plant safety procedures will be observed.

C.3.2.1 Enclosure. Where substantial damage to the enclosure, such as deformation, displacement of parts, or burning has occurred, replace the entire controller.

C.3.2.2 Circuit Breaker and Isolating Switch. Examine the enclosure interior, circuit breaker, and isolating switch for evidence of possible damage. If evidence of damage is not apparent, the circuit breaker and isolating switch can continue to be used after the door is closed.

If there is any indication that the circuit breaker has opened several short-circuit faults, or if signs of possible deterioration appear within either the enclosure, circuit breaker, or isolating switch (e.g., deposits on surface, surface discoloration, insulation cracking, or unusual toggle operation), replace the components. Verify that the external operating handle is capable of opening and closing the circuit breaker and isolating switch. If the handle fails to operate the device, this would also indicate the need for adjustment or replacement.

C.3.2.3 Terminals and Internal Conductors. Where there are indications of arcing damage, overheating, or both, such as discoloration and melting of insulation, replace the damaged parts.

C.3.2.4 Contactor. Replace contacts showing heat damage, displacement of metal, or loss of adequate wear allowance of the contacts. Replace the contact springs where applicable. If deterioration extends beyond the contacts, such as binding in the guides or evidence of insulation damage, replace the damaged parts or the entire contactor.

C.3.2.5 Return to Service. Before returning the controller to service, check for the tightness of electrical connections and for the absence of short circuits, ground faults, and leakage current.

Close and secure the enclosure before the controller circuit breaker and isolating switch are energized. Follow operating procedures on the controller to bring it into standby condition.

Annex D Obstruction Investigation

This annex is not a part of the requirements of this NFPA document but is included for informational purposes only.

D.1 For effective control and extinguishment of fire, automatic sprinklers should receive an unobstructed flow of water. Although the overall performance record of automatic sprinklers has been very satisfactory, there have been numerous instances of impaired efficiency because sprinkler piping or sprinklers were plugged with pipe scale, corrosion products, including those produced by microbiologically influenced corrosion, mud, stones, or other foreign material. If the first sprinklers to open in a fire are plugged, the fire in that area cannot be extinguished or controlled by prewetting of adjacent combustibles. In such a situation, the fire can grow to an uncontrollable size, resulting in greater fire damage and excessive sprinkler operation and even threatening the structural integrity of the building, depending on the number of plugged sprinklers and fire severity.

Keeping the inside of sprinkler system piping free of scale, silt, or other obstructing material is an integral part of an effective loss prevention program.

D.2 Obstruction Sources.

D.2.1 Pipe Scale. Loss studies have shown that dry pipe sprinkler systems are involved in the majority of obstructed sprinkler fire losses. Pipe scale was found to be the most frequent obstructing material (it is likely that some of the scale was composed of corrosion products, including those produced by microbiologically influenced corrosion). Dry pipe systems that have been maintained wet and then dry alternately over a period of years are particularly susceptible to the accumulation of scale. Also, in systems that are continuously dry, condensation of moisture in the air supply can result in the formation of a hard scale, microbiological materials, and corrosion products along the bottom of the piping. When sprinklers open, the scale is broken loose and carried along the pipe, plugging some of the sprinklers or forming obstructions at the fittings.

D.2.2 Careless Installation or Repair. Many obstructions are caused by careless workers during installation or repair of yard or public mains and sprinkler systems. Wood, paint brushes, buckets, gravel, sand, and gloves have been found as obstructions. In some instances, with welded sprinkler systems and systems with holes for quick-connect fittings, the cutout discs or coupons have been left within the piping, obstructing flow to sprinklers.

D.2.3 Raw Water Sources. Materials can be sucked up from the bottoms of rivers, ponds, or open reservoirs by fire pumps with poorly arranged or inadequately screened intakes and then forced into the system. Sometimes floods damage intakes. Obstructions include fine, compacted materials such as rust, mud, and sand. Coarse materials, such as stones, cinders, cast-iron tubercles, chips of wood, and sticks, also are common.

D.2.4 Biological Growth. Biological growth has been known to cause obstructions in sprinkler piping. The Asiatic clam has been found in fire protection systems supplied by raw river or lake water. With an available food supply and sunlight, these clams grow to approximately ⅜ in. to 7⁄16 in. (9 mm to 11 mm) across the shell in 1 year and up to 2⅛ in. (54 mm) and larger by the sixth year. However, once in fire mains and sprinkler piping, the growth rate is much slower. The clams get into the

Copyright National Fire Protection Association
Provided by IHS under license with NFPA
No reproduction or networking permitted without license from IHS
Not for Resale

fire protection systems in the larval stage or while still small clams. They then attach themselves to the pipe and feed on bacteria or algae that pass through.

Originally brought to Washington state from Asia in the 1930s, the clams have spread throughout at least 33 states and possibly are present in every state. River areas reported to be highly infested include the Ohio River, Tennessee River Valley, Savannah River (S. Carolina), Altamaha River (Georgia), Columbia River (Washington), and Delta-Mendota Canal (California).

D.2.5 Sprinkler Calcium Carbonate Deposits. Natural freshwaters contain dissolved calcium and magnesium salts in varying concentrations, depending on the sources and location of the water. If the concentration of these salts is high, the water is considered hard. A thin film composed largely of calcium carbonate, $CaCO_3$, affords some protection against corrosion where hard water flows through the pipes. However, hardness is not the only factor to determine whether a film forms. The ability of $CaCO_3$ to precipitate on the metal pipe surface also depends on the water's total acidity or alkalinity, the concentration of dissolved solids in the water, and its pH. In soft water, no such film can form.

In automatic sprinkler systems, the calcium carbonate scale formation tends to occur on the more noble metal in the electrochemical series, which is copper, just as corrosion affects the less noble metal, iron. Consequently, scale formation naturally forms on sprinklers, often plugging the orifice. The piping itself could be relatively clear. This type of sprinkler obstruction cannot be detected or corrected by normal flushing procedures. It can be found only by inspection of sprinklers in suspected areas and then removed.

Most public water utilities in very hard water areas soften their water to reduce consumer complaints of scale buildup in water heaters. Thus, the most likely locations for deposits in sprinkler systems are where sprinklers are not connected to public water but supplied without treatment directly from wells or surface water in areas that have very hard water. These areas generally include the Mississippi basin west of the Mississippi River and north of the Ohio River, the rivers of Texas and the Colorado basin, and other white areas in Figure D.2.5(a). (The water of the Great Lakes is only moderately hard.)

Within individual plants, the sprinklers most likely to have deposits are located as follows:

(1) In wet systems only.
(2) In high temperature areas, except where water has unusually high pH *[see Figure D.2.5(b)]*. High temperature areas include those near dryers, ovens, and skylights or at roof peaks.
(3) In old sprinkler systems that are frequently drained and refilled.
(4) In pendent sprinklers that are located away from air pockets and near convection currents.

D.2.6 Forms of Corrosion. Corrosion is defined as the deterioration of a material, usually a metal, resulting from a chemical or electrochemical reaction. The eight main forms of corrosion include: (1) uniform corrosion, (2) pitting, (3) galvanic corrosion, (4) crevice corrosion, (5) selective leaching (parting), (6) erosion corrosion, (7) environmental cracking, and (8) intergranular corrosion. Microbiologically influenced corrosion (MIC) is included herein as a ninth form of corrosion, although it is usually a secondary factor that accelerates or exacerbates the rate of another form of corrosion. Definitions of the different forms of corrosion are discussed next.

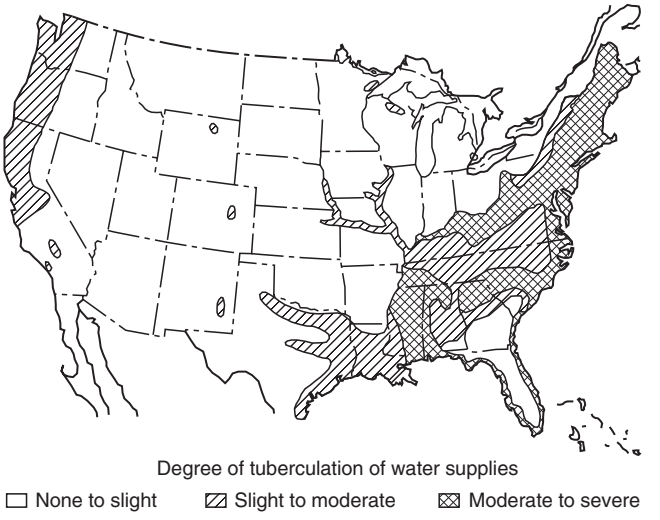

FIGURE D.2.5(a) Map of Hard Water Areas. ***(Courtesy of Cast Iron Pipe Research Association.)***

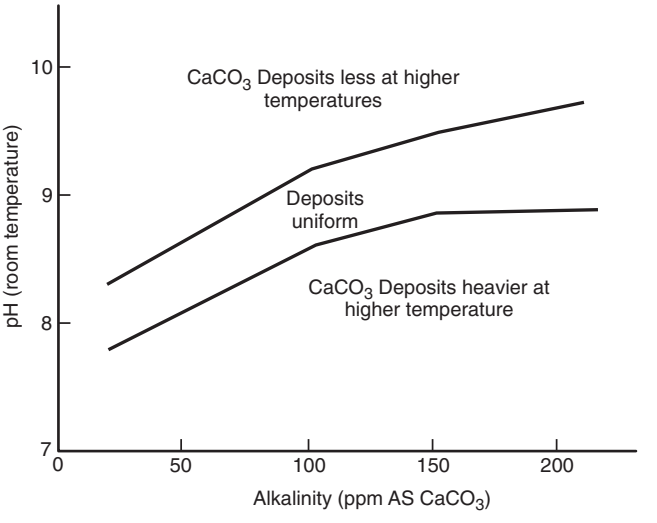

FIGURE D.2.5(b) Scale Deposition as a Function of the Alkalinity/pH Ratio.

(1) *Uniform (or general) corrosion:* A regular loss of a small quantity of metal over the entire area or over a large section of the total area, which is evenly distributed within a pipe(s).
(2) *Pitting:* A localized form of corrosion that results in holes or cavities in the metal. Pitting is considered to be one of the more destructive forms of corrosion and is often difficult to detect. Pits may be covered or open and normally grow in the direction of gravity — for example, at the bottom of a horizontal surface.
(3) *Galvanic corrosion:* An electric potential exists between dissimilar metals in a conductive (corrosive) solution. The contact between the two materials allows electrons to transfer from one metal to the other. One metal acts as a cathode and the other as an anode. Corrosion usually occurs at anodic metal only.

Copyright National Fire Protection Association
Provided by IHS under license with NFPA
No reproduction or networking permitted without license from IHS
Not for Resale

(4) *Crevice corrosion:* A localized form of corrosion that occurs within crevices and other shielded areas on metal surfaces exposed to a stagnant corrosive solution. This form of corrosion usually occurs beneath gaskets, in holes, surface deposits, in thread and groove joints. Crevice corrosion is also referred to as gasket corrosion, deposit corrosion, and under-deposit corrosion.
(5) *Selective leaching:* The selective removal of one element from an alloy by corrosion. A common example is dezincification (selective removal of zinc) of unstabilized brass, resulting in a porous copper structure.
(6) *Erosion corrosion:* Corrosion resulting from the cumulative damage of electrochemical reactions and mechanical effects. Erosion corrosion is the acceleration or increase in the rate of corrosion created by the relative movement of a corrosive fluid and a metal surface. Erosion corrosion is observed as grooves, gullies, waves, rounded holes, or valleys in a metal surface.
(7) *Environmental cracking:* An acute form of localized corrosion caused by mechanical stresses, embrittlement, or fatigue.
(8) *Integranular corrosion:* Corrosion caused by impurities at grain boundaries, enrichment of one alloying element, or depletion of one of the elements in the grain boundary areas.
(9) *Microbiologically influenced corrosion (MIC):* Corrosion initiated or accelerated by the presence and activities of microorganisms, including bacteria and fungi. Colonies (also called bio-films and slimes) are formed in the surface of pipes among a variety of types of microbes. Microbes deposit iron, manganese, and various salts into the pipe surfaces, forming nodules, tubercles, and carbuncles. The formation of these deposits can cause obstruction to flow and dislodge, causing blockage (plugging) of system piping, valves, and sprinklers.

D.2.7 Microbiologically Influenced Corrosion (MIC). The most common biological growths in sprinkler system piping are those formed by microorganisms, including bacteria and fungi. These microbes produce colonies (also called biofilms, slimes) containing a variety of types of microbes. Colonies form on the surface of wetted pipe in both wet and dry systems. Microbes also deposit iron, manganese, and various salts onto the pipe surface, forming discrete deposits (also termed nodules, tubercles, and carbuncles). These deposits can cause obstruction to flow and dislodge, causing plugging of fire sprinkler components. Subsequent under-deposit pitting can also result in pinhole leaks.

Microbiologically influenced corrosion (MIC) is corrosion influenced by the presence and activities of microorganisms. MIC almost always occurs with other forms of corrosion (oxygen corrosion, crevice corrosion, and under-deposit corrosion). MIC starts as microbial communities (also called biofilms, slimes) growing on the interior surface of the wetted sprinkler piping components in both wet and dry systems. The microbial communities contain many types of microbes, including slime formers, acid-producing bacteria, iron-depositing bacteria, and sulfate-reducing bacteria, and are most often introduced into the sprinkler system from the water source. The microbes deposit iron, manganese, and various salts onto the pipe surface, forming discrete deposits (also termed nodules, tubercles, and carbuncles). These deposits can cause obstruction to flow and dislodge, causing plugging of fire sprinkler components. MIC is most often seen as severe pitting corrosion occurring under deposits. Pitting is due to microbial activities such as acid production, oxygen consumption, and accumulation of salts. Oxygen and salts, especially chloride, can greatly increase the severity of MIC and other forms of corrosion.

In steel pipe, MIC is most often seen as deposits on the interior surface of the pipes. The deposits can be orange, red, brown, black, and white (or combinations thereof), depending on local conditions and water chemistry. The brown, orange, and red forms are most common in oxygenated portions of the system and often contain oxidized forms of iron and other materials on the outside, with reduced (blacker) corrosion products on the inside. Black deposits are most often in smaller diameter piping farther from the water source and contain reduced forms (those with less oxygen) of corrosion products. White deposits often contain carbonate scales.

MIC of copper and copper alloys occurs as discrete deposits of smaller size, which are green to blue in color. Blue slimes can also be produced in copper piping or copper components (e.g., brass heads).

MIC is often first noticed as a result of pinhole leaks after only months to a few years of service. Initial tests for the presence of MIC should involve on-site testing for microbes and chemical species (iron, pH, oxygen) important in MIC. This information is also very important in choosing treatment methods. These tests can be done on water samples from source waters and various locations in the sprinkler system (e.g., main drain, inspector's test valve). Confirmation of MIC can be made by examination of interior of pipes for deposits and under-deposit corrosion with pit morphology consistent with MIC (cup-like pits within pits and striations).

The occurrence and severity of MIC is enhanced by the following:

(1) Using untreated water to test and fill sprinkler piping. This is made worse by leaving the water in the system for long periods of time.
(2) Introduction of new and untreated water containing oxygen, microbes, salts, and nutrients into the system on a frequent basis (during repair, renovation, and/or frequent flow tests).
(3) Leaving dirt, debris, and especially oils, pipe joint compound, and so forth in the piping. These provide nutrients and protection for the microbes, often preventing biocides and corrosion inhibitors from reaching the microbes and corrosion sites.

Once the presence of MIC has been confirmed, the system should be assessed to determine the extent and severity of MIC. Severely affected portions should be replaced or cleaned to remove obstructions and pipe not meeting minimal mechanical specifications.

D.3 Investigation Procedures. If unsatisfactory conditions are observed as outlined in Section 14.2, investigations should be made to determine the extent and severity of the obstructing material. From the fire protection system plan, determine the water supply sources, age of underground mains and sprinkler systems, types of systems, and general piping arrangement. Consider the possible sources of obstruction material.

Examine the fire pump suction supply and screening arrangements. If necessary, have the suction cleaned before using the pump in tests and flushing operations. Gravity tanks should be inspected internally, with the exception of steel tanks that have been recently cleaned and painted. If possible, have the tank drained and determine whether loose scale is on the shell or if sludge or other obstructions are on the tank bottom. Cleaning and repainting could be in order, particularly if it has not been done within the previous 5 years.

Copyright National Fire Protection Association
Provided by IHS under license with NFPA
No reproduction or networking permitted without license from IHS
Not for Resale

Investigate yard mains first, then sprinkler systems.

Where fire protection control valves are closed during investigation procedures, the fire protection impairment precautions outlined in Chapter 15 should be followed.

Large quantities of water are needed for investigation and for flushing. It is important to plan the safest means of disposal in advance. Cover stock and machinery susceptible to water damage and keep equipment on hand for mopping up any accidental discharge of water.

D.3.1 Investigating Yard Mains. Flow water through yard hydrants, preferably near the extremes of selected mains, to determine whether mains contain obstructive material. It is preferable to connect two lengths of 2½ in. (65 mm) hose to the hydrant. Attach burlap bags to the free ends of the hose from which the nozzles have been removed to collect any material flushed out, and flow water long enough to determine the condition of the main being investigated. If there are several water supply sources, investigate each independently, avoiding any unnecessary interruptions to sprinkler protection. In extensive yard layouts, repeat the tests at several locations, if necessary, to determine general conditions.

If obstructive material is found, all mains should be flushed thoroughly before investigating the sprinkler systems. *(See Section D.5.)*

D.3.2 Investigating Sprinkler Systems. Investigate dry systems first. Tests on several carefully selected, representative systems usually are sufficient to indicate general conditions throughout the plant. If, however, preliminary investigations indicate the presence of obstructing material, this justifies investigating all systems (both wet and dry) before outlining needed flushing operations. Generally, the system can be considered reasonably free of obstructing material, provided the following conditions apply:

(1) Less than ½ cup of scale is washed from the cross mains.
(2) Scale fragments are not large enough to plug a sprinkler orifice.
(3) A full, unobstructed flow is obtained from each branch line checked.

Where other types of foreign material are found, judgment should be used before considering the system unobstructed. Obstruction potential is based on the physical characteristics and source of the foreign material.

In selecting specific systems or branch lines for investigation, the following should be considered:

(1) Lines found obstructed during a fire or during maintenance work
(2) Systems adjacent to points of recent repair to yard mains, particularly if hydrant flow shows material in the main

Tests should include flows through 2½ in. (65 mm) fire hose directly from cross mains *[see Figure D.3.2(a) and Figure D.3.2(b)]* and flows through 1½ in. (40 mm) hose from representative branch lines. Two or three branch lines per system is a representative number of branch lines where investigating for scale accumulation. If significant scale is found, investigation of additional branch lines is warranted. Where investigating for foreign material (other than scale), the number of branch lines needed for representative sampling is dependent on the source and characteristic of the foreign material.

If provided, fire pumps should be operated for the large line flows, since maximum flow is desirable. Burlap bags should be used to collect dislodged material as is done in the investigation of yard mains. Each flow should be continued until the water clears (i.e., a minimum of 2 to 3 minutes at full flow for sprinkler mains). This is likely to be sufficient to indicate the condition of the piping interior.

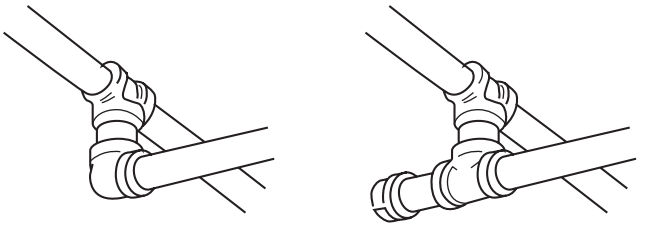

FIGURE D.3.2(a) Replacement of Elbow at End of Cross Main with a Flushing Connection Consisting of a 50 mm (2 in.) Nipple and Cap.

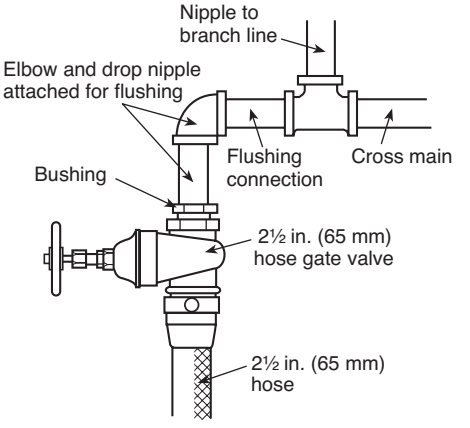

FIGURE D.3.2(b) Connection of 65 mm (2½ in.) Hose Gate Valve with a 50 mm (2 in.) Bushing and Nipple and Elbow to 50 mm (2 in.) Cross Main.

D.3.3 Investigating Dry Pipe Systems. Flood dry pipe systems one or two days before obstruction investigations to soften pipe scale and deposits. After selecting the test points of a dry pipe system, close the main control valve and drain the system. Check the piping visually with a flashlight while it is being dismantled. Attach hose valves and 1½ in. (40 mm) hose to the ends of the lines to be tested, shut the valves, have air pressure restored on the system, and reopen the control valve. Open the hose valve on the end branch line, allowing the system to trip in simulation of normal action. Any obstructions should be cleared from the branch line before proceeding with further tests.

After flowing the small end line, shut its hose valve and test the feed or cross main by discharging water through a 2½ in. (65 mm) fire hose, collecting any foreign material in a burlap bag.

After the test, the dry pipe valve should be cleaned internally and reset. Its control valve should be locked open and a drain test performed.

D.3.4 Investigating Wet Pipe Systems. Testing of wet systems is similar to that of dry systems, except that the system should be drained after closing the control valve to permit

Copyright National Fire Protection Association
Provided by IHS under license with NFPA
No reproduction or networking permitted without license from IHS
Not for Resale

installation of hose valves for the test. Slowly reopen the control valve and make a small hose flow as specified for the branch line, followed by the 2½ in. (65 mm) hose flow for the cross main.

In any case, if lines become plugged during the tests, piping should be dismantled and cleaned, the extent of plugging noted, and a clear flow obtained from the branch line before proceeding further.

Perform similar tests on representative systems to indicate the general condition of the wet systems throughout the plant, keeping a detailed record of the procedures performed.

D.3.5 Other Obstruction Investigation Methods. Other obstruction investigation methods, such as technically proven ultrasonic and X-ray examination, have been evaluated and if applied correctly, are successful at detecting obstructions.

The sources of the obstructing material should be determined and steps taken to prevent further entrance of such material. This entails work such as inspection and cleaning of pump suction screening facilities or cleaning of private reservoirs. If recently laid public mains appear to be the source of the obstructing material, waterworks authorities should be requested to flush their system.

D.4 Obstruction Prevention Program.

D.4.1 Dry Pipe and Preaction Systems — Scale.

(1) Dry pipe and preaction systems using noncoated ferrous piping should be thoroughly investigated for obstruction from corrosion after they have been in service for 15 years, for 25 years, and every 5 years thereafter.
(2) Dry pipe systems with noncoated ferrous piping should be kept on air year-round, rather than on air and water alternately, to inhibit formation of rust and scale.
(3) Piping that has been galvanized internally for new dry pipe and preaction sprinkler system installations should be used. Fittings, couplings, hangers, and other appurtenances are not required to be galvanized. Copper or stainless steel piping also is permitted.

D.4.2 Flushing Connections. Sprinkler systems installed in accordance with recent editions of NFPA 13, *Standard for the Installation of Sprinkler Systems*, should have provisions for flushing each cross main. Similarly, branch lines on gridded systems should be capable of being readily "broken" at a simple union or flexible joint. Property owners of systems installed without these provisions should be encouraged to provide them when replacement or repair work is being done.

D.4.3 Suction Supplies.

(1) Screen pump suction supplies and screens should be maintained. Connections from penstocks should be equipped with strainers or grids, unless the penstock inlets themselves are so equipped. Pump suction screens of copper or brass wire tend to promote less aquatic growth.
(2) Extreme care should be used to prevent material from entering the suction piping when cleaning tanks and open reservoirs. Materials removed from the interior of gravity tanks during cleaning should not be allowed to enter the discharge pipe.
(3) Small mill ponds could need periodic dredging where weeds and other aquatic growth are inherent.

D.4.4 Asian Clams. Effective screening of larvae and small-size, juvenile Asian clams from fire protection systems is very difficult. To date, no effective method of total control has been found. Such controls can be difficult to achieve in fire protection systems.

D.4.5 Calcium Carbonate. For localities suspected of having hard water, sample sprinklers should be removed and inspected yearly. Section D.2.5 outlines sprinkler locations prone to the accumulation of deposits where hard water is a problem. Sprinklers found with deposits should be replaced, and adjacent sprinklers should be checked.

D.4.6 Zebra Mussels. Several means of controlling the zebra mussel are being studied, including molluscicides, chlorines, ozone, shell strainers, manual removal, robotic cleaning, water jetting, line pigging, sonic pulses, high-voltage electrical fields, and thermal backwashing. It is believed that these controls might need to be applied only during spawning periods when water temperatures are 57°F to 61°F (14°C to 16°C) and veligers are present. Several silicon grease-based coatings also are being investigated for use within piping systems.

While it appears that the use of molluscicides could provide the most effective means of controlling the mussel, these chemicals are costly. It is believed that chlorination is the best available short-term treatment, but there are problems associated with the use of chlorine, including strict Environmental Protection Agency regulations on the release of chlorine into lakes and streams. The use of nonselective poison, such as chlorine, in the amounts necessary to kill the mussels in large bodies of water could be devastating to entire ecosystems.

To provide an effective means of control against zebra mussels in fire protection systems, control measures should be applied at the water source, instead of within the piping system. Effective controls for growth of the zebra mussel within fire protection systems include the following:

(1) Selecting a water source that is not subject to infestation. This could include well water or potable or pretreated water.
(2) Implementing a water treatment program that includes biocides or elevated pH, or both.
(3) Implementing a water treatment program to remove oxygen, to ensure control of biological growth within piping.
(4) Relying on a tight system approach to deny oxygen and nutrients that are necessary to support growth.

D.5 Flushing Procedures.

D.5.1 Yard Mains. Yard mains should be flushed thoroughly before flushing any interior piping. Flush yard piping through hydrants at dead ends of the system or through blow-off valves, allowing the water to run until clear. If the water is supplied from more than one direction or from a looped system, close divisional valves to produce a high-velocity flow through each single line. A velocity of at least 10 ft/sec (3 m/sec) is necessary for scouring the pipe and for lifting foreign material to an aboveground flushing outlet. Use the flow specified in Table D.5.1 or the maximum flow available for the size of the yard main being flushed.

Connections from the yard piping to the sprinkler riser should be flushed. These are usually 6 in. (150 mm) mains. Although flow through a short, open-ended 2 in. (50 mm) drain can create sufficient velocity in a 6 in. (150 mm) main to move small obstructing material, the restricted waterway of the globe valve usually found on a sprinkler drain might not allow stones and other large objects to pass. If the presence of large size material is suspected, a larger outlet is needed to pass such material and to create the flow necessary to move it. Fire department connections on sprinkler risers can be used

Copyright National Fire Protection Association
Provided by IHS under license with NFPA
No reproduction or networking permitted without license from IHS
Not for Resale

as flushing outlets by removing the clappers. Yard mains also can be flushed through a temporary Siamese fitting attached to the riser connection before the sprinkler system is installed. *[See Figure D.5.1.]*

D.5.2 Sprinkler Piping. Two methods commonly are used for flushing sprinkler piping:

(1) The hydraulic method
(2) The hydropneumatic method

The hydraulic method consists of flowing water from the yard mains, sprinkler risers, feed mains, cross mains, and branch lines, respectively, in the same direction in which water would flow during a fire.

The hydropneumatic method uses special equipment and compressed air to blow a charge of about 30 gal (114 dm^3) of water from the ends of branch lines back into feed mains and down the riser, washing the foreign material out of an opening at the base of the riser.

The choice of method depends on conditions at the individual plant and the type of material installed. If examination indicates the presence of loose sand, mud, or moderate amounts of pipe scale, the piping generally can be flushed satisfactorily by the hydraulic method. Where the material is more difficult to remove and available water pressures are too low for effective scouring action, the hydropneumatic method generally is more satisfactory. The hydropneumatic method should not be used with listed CPVC sprinkler piping.

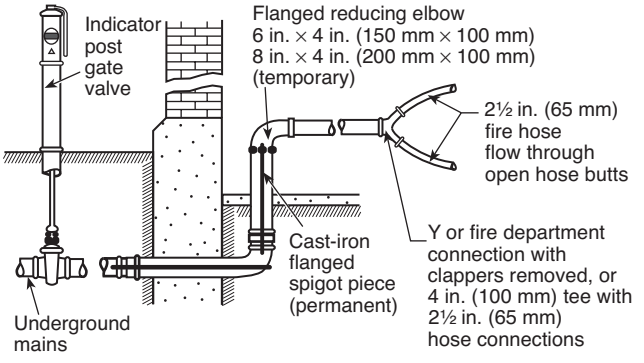

FIGURE D.5.1 Arrangement for Flushing Branches from Underground Mains to Sprinkler Risers.

In some cases, where obstructive material is solidly packed or adheres tightly to the walls of the piping, the pipe needs to be dismantled and cleaned by rodding or other means.

Dry pipe systems should be flooded one or two days before flushing to soften pipe scale and deposits.

Successful flushing by either the hydraulic or hydropneumatic method is dependent on establishing sufficient velocity of flow in the pipes to remove silt, scale, and other obstructive material. With the hydraulic method, water should be moved through the pipe at least at the rate of flow indicated in Table D.5.1.

Where flushing a branch line through the end pipe, sufficient water should be discharged to scour the largest pipe in the branch line. Lower rates of flow can reduce the efficiency of the flushing operation. To establish the recommended flow, remove the small end piping and connect the hose to a larger section, if necessary.

Where pipe conditions indicate internal or external corrosion, a section of the pipe affected should be cleaned thoroughly to determine whether the walls of the pipe have seriously weakened. Hydrostatic testing should be performed as outlined in NFPA 13, *Standard for the Installation of Sprinkler Systems.*

Pendent sprinklers should be removed and inspected until it is reasonably certain that all are free of obstruction material.

Painting the ends of branch lines and cross mains is a convenient method for keeping a record of those pipes that have been flushed.

D.5.3 Hydraulic Method. After the yard mains have been thoroughly cleaned, flush risers, feed mains, cross mains, and finally the branch lines. In multistory buildings, systems should be flushed by starting at the lowest story and working up. Branch line flushing in any story can immediately follow the flushing of feed and cross mains in that story, allowing one

Table D.5.1 Flushing Rates to Accomplish Flow of 10 ft/sec (3 m/sec)

	Steel			Copper				Polybutylene	
Pipe Size	SCH 10 (gpm)	SCH 40 (gpm)	XL (gpm)	K (gpm)	L (gpm)	M (gpm)	CPVC (gpm)	CTS (gpm)	IPS (gpm)
¾	—	—	—	14	15	16	19	12	17
1	29	24	30	24	26	27	30	20	27
1¼	51	47	52	38	39	41	48	30	43
1½	69	63	70	54	55	57	63	42	57
2	114	105	114	94	96	99	98	72	90
2½	170	149	163	145	149	152	144	—	—
3	260	230	251	207	212	217	213	—	—
4	449	396	—	364	373	379	—	—	—
5	686	623	—	565	582	589	—	—	—
6	989	880	—	807	836	846	—	—	—
8	1665	1560	—	1407	1460	1483	—	—	—
10	2632	2440	—	2185	2267	2303	—	—	—
12	—	3520	—	—	—	—	—	—	—

For SI units: 1 gpm = 3.785 L/min.

Copyright National Fire Protection Association
Provided by IHS under license with NFPA
No reproduction or networking permitted without license from IHS
Not for Resale

story to be completed at a time. Following this sequence prevents drawing obstructing material into the interior piping.

To flush risers, feed mains, and cross mains, attach 2½ in. (65 mm) hose gate valves to the extreme ends of these lines *[see Figure D.5.3]*. Such valves usually can be procured from the manifold of fire pumps or hose standpipes. As an alternative, an adapter with 2½ in. (65 mm) hose thread and standard pipe thread can be used with a regular gate valve. A length of fire hose without a nozzle should be attached to the flushing connection. To prevent kinking of the hose and to obtain maximum flow, an elbow usually should be installed between the end of the sprinkler pipe and the hose gate valve. Attach the valve and hose so that no excessive strain will be placed on the threaded pipe and fittings. Support hose lines properly.

Where feed and cross mains and risers contain pipe 4 in., 5 in., and 6 in. (100 mm, 125 mm, and 150 mm) in diameter, it could be necessary to use a Siamese with two hose connections to obtain sufficient flow to scour this larger pipe.

Flush branch lines after feed and cross mains have been thoroughly cleared. Equip the ends of several branch lines with gate valves, and flush individual lines of the group consecutively. This eliminates the need for shutting off and draining the sprinkler system to change a single hose line. The hose should be 1½ in. (40 mm) in diameter and as short as practicable. Branch lines can be permitted to be flushed in any order that expedites the work.

Branch lines also may be permitted to be flushed through pipe 1½ in. (40 mm) in diameter or larger while extended through a convenient window. If pipe is used, 45 degree fittings should be provided at the ends of branch lines. Where flushing branch lines, hammering the pipes is an effective method of moving obstructions.

Figure D.5.3 shows a typical gridded piping arrangement prior to flushing. The flushing procedure is as follows:

(1) Disconnect all branch lines and cap all open ends.
(2) Remove the cap from the east end of the south cross main, flush the main, and replace the cap.
(3) Remove the cap from branch line 1, flush the line, and replace the cap.
(4) Repeat step (3) for the remaining branch lines.
(5) Reconnect enough branch lines at the west end of the system so that the aggregate cross-sectional area of the branch lines approximately equals the area of the north cross main. For example, three 1¼ in. (32 mm) branch lines approximately equal a 2½ in. (65 mm) cross main. Remove the cap from the east end of the north cross main, flush the main, and replace the cap.
(6) Disconnect and recap the branch lines. Repeat step (5), but reconnect branch lines at the east end of the system and flush the north cross main through its west end.
(7) Reconnect all branch lines and recap the cross main. Verify that the sprinkler control valve is left in the open and locked position.

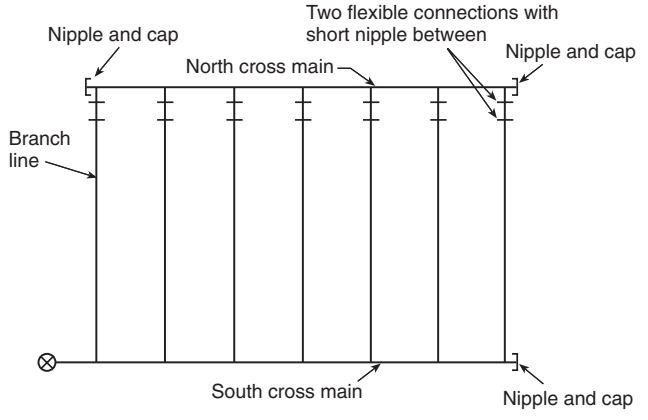

FIGURE D.5.3 Gridded Sprinkler System Piping.

D.5.4 Hydropneumatic Method. The apparatus used for hydropneumatic flushing consists of a hydropneumatic machine, a source of water, a source of compressed air, 1 in. (25 mm) rubber hose for connecting to branch lines, and 2½ in. (65 mm) hose for connecting to cross mains.

The hydropneumatic machine *[see Figure D.5.4(a)]* consists of a 30 gal (114 dm^3) (4 ft^3) water tank mounted over a 185 gal (700 dm^3) (4 ft^3) compressed air tank. The compressed air tank is connected to the top of the water tank through a 2 in. (50 mm) lubricated plug cock. The bottom of the water tank is connected through hose to a suitable water supply. The compressed air tank is connected through suitable air hose to either the plant air system or a separate air compressor.

To flush the sprinkler piping, the water tank is filled with water, the pressure is raised to 100 psi (6.9 bar) in the compressed air tank, and the plug cock between tanks is opened to put air pressure on the water. The water tank is connected by hose to the sprinkler pipe to be flushed. The lubricated plug cock on the discharge outlet at the bottom of the water tank then is snapped open, allowing the water to be "blown" through the hose and sprinkler pipe by the compressed air.

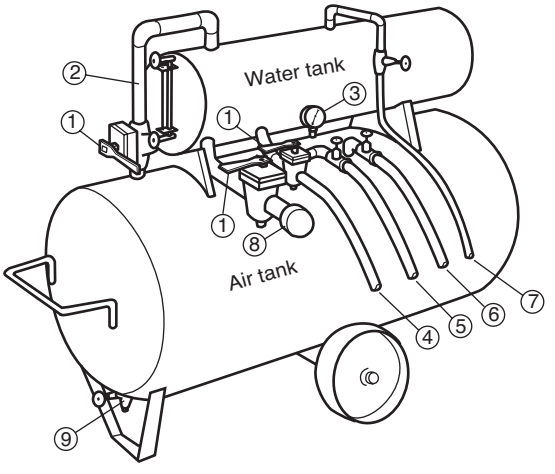

1 Lubricated plug cocks
2 Pipe connection between air and water tanks (This connection is open when flushing sprinkler system.)
3 Air pressure gauge
4 1 in. (25 mm) rubber hose (air type) (Used to flush sprinkler branch lines.)
5 Hose connected to source of water (Used to fill water tank.)
6 Hose connected to ample source of compressed air (Used to supply air tank.)
7 Water tank overflow hose
8 2½ in. (65 mm) pipe connection [Where flushing large interior piping, connect woven jacket fire hose here and close 1 in. (25 mm) plug cock hose connection (4) used for flushing sprinkler branch lines.]
9 Air tank drain valve

FIGURE D.5.4(a) Hydropneumatic Machine.

Copyright National Fire Protection Association
Provided by IHS under license with NFPA
No reproduction or networking permitted without license from IHS
Not for Resale

The water tank and air tank should be recharged after each blow.

Outlets for discharging water and obstructing material from the sprinkler system should be arranged. With the clappers of dry pipe valves and alarm check valves on their seats and cover plates removed, sheet metal fittings can be used for connection to 2½ in. (65 mm) hose lines or for discharge into a drum [maximum capacity per blow is approximately 30 gal (114 dm^3)]. If the 2 in. (50 mm) riser drain is to be used, the drain valve should be removed and a direct hose connection made. For wet pipe systems with no alarm check valves, the riser should be taken apart just below the drain opening and a plate inserted to prevent foreign material from dropping to the base of the riser. Where dismantling of a section of the riser for this purpose is impractical, the hydropneumatic method should not be used.

Before starting a flushing job, each sprinkler system to be cleaned should be studied and a schematic plan prepared showing the order of the blows.

To determine that the piping is clear after it has been flushed, representative branch lines and cross mains should be investigated, using both visual examination and sample flushings.

(1) *Branch Lines.* With the yard mains already flushed or known to be clear, the sprinkler branch lines should be flushed next. The order of cleaning individual branch lines should be laid out carefully if an effective job is to be done. In general, the branch lines should be flushed, starting with the branch closest to the riser and working toward the dead end of the cross main. *[See Figure D.5.4(b).]* The order for flushing the branch lines is shown by the circled numerals. In this example, the southeast quadrant is flushed first, then the southwest, followed by the northeast, and, finally, the northwest. Air hose 1 in. (25 mm) in diameter is used to connect the machine with the end of the branch line being flushed. This hose air pressure should be allowed to drop to 85 psi (5.9 bar) before the valve is closed. The resulting short slug of water experiences less friction loss and a higher velocity and, therefore, cleans more effectively than if the full 30 gal (114 dm^3) of water were to be used. One blow is made for each branch line.

(2) *Large Piping.* Where flushing cross mains, fill the water tank completely and raise the pressure in the air receiver to 100 psi (6.9 bar) (690 kPa). Connect the machine to the end of the cross main to be flushed with no more than 50 ft (15.2 m) of 2½ in. (65 mm) hose. After opening the valve, allow air pressure in the machine to drop to zero (0). Two to six blows are necessary at each location, depending on the size and length of the main. In Figure D.5.4(b), the numerals in squares indicate the location and order of the cross main blows. Because the last branch line blows performed were located west of the riser, clean the cross main located east of the riser first. Where large cross mains are to be cleaned, it is best, if practical, to make one blow at 38, one at 39, the next again at 38, then again at 39, alternating in this manner until the required number of blows has been made at each location.

(3) Where flushing cross mains and feed mains, arrange the work so that the water passes through a minimum of right-angle bends. In Figure D.5.4(b), blows at 38 should be adequate to flush the cross mains back to the riser. Do not attempt to clean the cross main from location A to the riser by backing out branch line 16 and connecting the hose to the open side of the tee. If this were to be done, a considerable portion of the blow would pass northward up the 3 in. (76 mm) line supplying branches 34 to 37, and the portion passing eastward to the riser could be ineffective. Where the size, length, and condition of cross mains necessitate blowing from a location corresponding to location A, the connection should be made directly to the cross main corresponding to the 3½ in. (90 mm) pipe so that the entire flow travels to the riser. Where flushing through a tee, always flush the run of the tee after flushing the branch. Note the location of blows 35, 36, and 37 in Figure D.5.4(b). Gridded systems can be flushed in a similar fashion. With branch lines disconnected and capped, begin flushing the branch line closest to the riser (branch line 1 in Figure D.5.3), working toward the most remote line. Then flush the south cross main in Figure D.5.3 by connecting the hose to the east end. Flushing the north cross main involves connecting the hose to one end while discharging to a safe location from the other end.

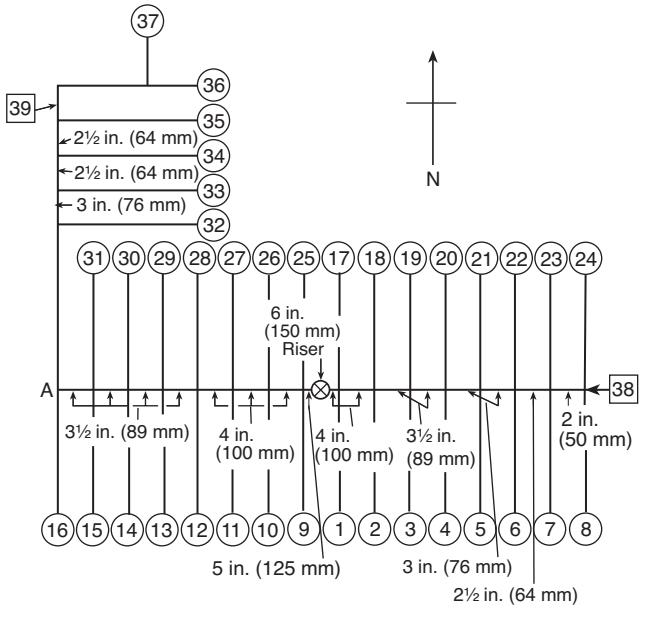

FIGURE D.5.4(b) Schematic Diagram of Sprinkler System Showing Sequence To Be Followed Where Hydropneumatic Method Is To Be Utilized.

Annex E Informational References

E.1 Referenced Publications. The documents or portions thereof listed in this annex are referenced within the informational sections of this standard and are not part of the requirements of this document unless also listed in Chapter 2 for other reasons.

E.1.1 NFPA Publications. National Fire Protection Association, 1 Batterymarch Park, Quincy, MA 02169-7471.

NFPA 13, *Standard for the Installation of Sprinkler Systems*, 2007 edition.

NFPA 13R, *Standard for the Installation of Sprinkler Systems in Residential Occupancies up to and Including Four Stories in Height*, 2007 edition.

NFPA 14, *Standard for the Installation of Standpipe and Hose Systems*, 2007 edition.

Copyright National Fire Protection Association
Provided by IHS under license with NFPA
No reproduction or networking permitted without license from IHS
Not for Resale

NFPA 15, *Standard for Water Spray Fixed Systems for Fire Protection*, 2007 edition.

NFPA 16, *Standard for the Installation of Foam-Water Sprinkler and Foam-Water Spray Systems*, 2007 edition.

NFPA 20, *Standard for the Installation of Stationary Pumps for Fire Protection*, 2007 edition.

NFPA 22, *Standard for Water Tanks for Private Fire Protection*, 2003 edition.

NFPA 24, *Standard for the Installation of Private Fire Service Mains and Their Appurtenances*, 2007 edition.

NFPA 72®, *National Fire Alarm Code®*, 2007 edition.

NFPA 750, *Standard on Water Mist Fire Protection Systems*, 2006 edition.

NFPA 780, *Standard for the Installation of Lightning Protection Systems*, 2008 edition.

E.1.2 Other Publications.

E.1.2.1 ASTM Publications. ASTM International, 100 Barr Harbor Drive, P.O. Box C700, West Conshohocken, PA 19428-2959.

IEEE/ASTM-SI-10, *American National Standard for Use of the International System of Units (SI): The Modern Metric System*, 2002.

E.1.2.2 AWWA Publications. American Water Works Association, 6666 West Quincy Avenue, Denver, CO 80235.

AWWA, *Manual of Water Supply Practices — M42 Steel Water-Storage Tanks*, 1998.

E.1.2.3 Hydraulic Institute Publications. Hydraulic Institute, 9 Sylvan Way, Parsippany, NJ 07054.

Hydraulic Institute Standards for Centrifugal, Rotary and Reciprocating Pumps, 14th edition, 1983.

E.2 Informational References. The following documents or portions thereof are listed here as informational resources only. They are not a part of the requirements of this document.

E.2.1 NFPA Publications. National Fire Protection Association, 1 Batterymarch Park, Quincy, MA 02169-7471.

NFPA 1, *Uniform Fire Code™*, 2006 edition.

E.2.2 Other Publications.

E.2.2.1 AWWA Publications. American Water Works Association, 6666 West Quincy Avenue, Denver, CO 80235.

AWWA D101, *Inspecting and Repairing Steel Water Tanks, Standpipes, Reservoirs, and Elevated Tanks, for Water Storage*, 1986.

E.2.2.2 SSPC Publications. Society of Protective Coatings, 40 24th Street, 6th Floor, Pittsburgh, PA 15222.

SSPC Chapter 3, "Special Pre-Paint Treatments," 1993.

SSPC-PA 1, *Shop, Field, and Maintenance Painting*, 1991.

SSPC Paint 8, *Aluminum Vinyl Paint*, 1991.

SSPC Paint 9, *White (or Colored) Vinyl Paint*, 1995.

SSPC-SP 6, *Commercial Blast Cleaning*, 1994.

SSPC-SP 8, *Pickling*, 1991.

SSPC-SP 10, *Near-White Blast Cleaning*, 1994.

E.2.2.3 U.S. Government Publications. U.S. Government Printing Office, Washington, DC 20402.

Bureau of Reclamation Specification VR-3.

Federal Specification TT- P-86, *Specifications for Vinyl Resin Paint*, M-54, 1995.

E.2.2.4 Other Publications.

Edward K. Budnick, P.E., "Automatic Sprinkler System Reliability," *Fire Protection Engineering*, Society of Fire Protection Engineers, Winter 2001.

Fire Protection Equipment Surveillance Optimization and Maintenance Guide, Electric Power Research Institute, July 2003.

William E. Koffel, P.E., *Reliability of Automatic Sprinkler Systems*, Alliance for Fire Safety.

NFPA's Future in Performance Based Codes and Standards, July 1995.

NFPA Performance Based Codes and Standards Primer, December 1999.

E.3 References for Extracts in Informational Sections.

NFPA 20, *Standard for the Installation of Stationary Pumps for Fire Protection*, 2007 edition.

NFPA 24, *Standard for the Installation of Private Fire Service Mains and Their Appurtenances*, 2007 edition.

NFPA 750, *Standard on Water Mist Fire Protection Systems*, 2006 edition.

Copyright National Fire Protection Association
Provided by IHS under license with NFPA
No reproduction or networking permitted without license from IHS
Not for Resale

Index

Copyright © 2007 National Fire Protection Association. All Rights Reserved.

The copyright in this index is separate and distinct from the copyright in the document that it indexes. The licensing provisions set forth for the document are not applicable to this index. This index may not be reproduced in whole or in part by any means without the express written permission of NFPA.

-A-

Accessibility 4.1.1, A.4.1.1
Adjustments .....*see* Repairs, reconditioning, replacements, or adjustments
Alarm devices .....*see also* Waterflow alarms
False alarms .....*see* Supervisory service, notification to
Fire pumps 8.1.2, A.8.1.2
Foam-water sprinkler systems ..... Table 11.5.1
Inspection ..... Table 5.1
Private fire service mains ..... Table 7.5.1
Sprinkler systems ..... 5.2.6, 5.3.3, Table 5.5.1, A.5.3.3.2, A.5.3.3.5
Standpipe and hose systems ..... 6.3.3, Table 6.5.1
Valves 13.2.6
Water mist systems 12.3.6
Water spray fixed systems ..... Table 10.5.1
Water tanks .....*see* Water tanks
Alarm receiving facility (definition) 3.3.1
Alarm valves ..... Table 13.1, 13.4.1, A.13.1, A.13.4.1.1, A.13.4.1.2
Antifreeze sprinkler systems 5.3.4, A.5.3.4
Antifreeze solution ..... Table 5.1, 5.3.4, Table 5.5.1, A.5.3.4
Control valve information sign .....*see* Signs, information
Definition 3.6.4.1
Application of standard 1.3, A.1.3
Approved (definition) 3.2.1, A.3.2.1
Asian clams, obstruction by D.2.4, D.4.4
Authority having jurisdiction (definition) 3.2.2, A.3.2.2
Automatic detection equipment ..... Table 10.1, 10.2.3, 10.3.4.1, 10.3.4.2, 10.4.2, Table 11.1, 11.2.2, 11.3.2.4, 12.3.6, A.10.3.4.1
Component replacement action requirements ..... Table 5.5.1, Table 10.5.1, Table 11.5.1
Definition 3.3.2, A.3.3.2
Automatic operation (definition) 3.3.3

-B-

Backflow prevention assemblies ..... Table 13.1, 13.6, A.13.1, A.13.6.1.2, A.13.6.2.1; *see also* Reduced-pressure principle backflow prevention assemblies (RPBA)
Ball valves ..... Table 11.5.1, A.13.1
Biological growth, obstruction caused by ..... D.2.4; *see also* Microbiologically influenced corrosion (MIC)
Bladder tank proportioners ..... Table 11.1, 11.2.9.5.2, 11.4.4, Table 11.5.1, A.11.2.9.5.2, A.11.4.4.2
Definition ..... 3.3.27.1, Fig. A.3.3.27.1
Buildings, inspection of ..... Table 5.1, 5.2.5

-C-

Calcium carbonate, obstruction by D.2.5, D.4.5
Changes
In hazard 4.1.6, 12.1.5
In occupancy, use, process, or materials 4.1.5, 12.1.5, A.4.1.5
Check valves ..... Table 9.1, Table 13.1, 13.4.2, A.13.1; *see also* Double check valve assembly (DCVA)
Combined standpipe and sprinkler systems (definition) 3.6.1
Commercial-type cooking equipment, sprinklers and nozzles for 5.4.1.9
Concealed spaces, sprinklers in 5.2.1.1.4, 5.2.2.3, A.5.2.1.1.4, A.5.2.2.3
Confined spaces, entry to 4.8.1
Connections
Fire department .....*see* Fire department connections
Flushing D.5.1
Hose .....*see* Hose connections
Controllers, pump 8.1.6, A.8.1.6, C.3
Control valves ..... 13.3, A.13.3.1 to A.13.3.3.5
Component action requirements 5.5.1.2, 6.5.1.2, 7.5.1.2, 9.6.1.2, 10.5.1.2, 11.5.3
Definition 3.5.1, A.3.5.1
Impairments, signs indicating 10.1.4.2
Information signs .....*see* Signs, information
Inspection ..... Table 5.1, Table 6.1, Table 9.1, Table 13.1, 13.3.2, 13.5.2.1, A.13.3.2.2
Maintenance ..... Table 9.1, 12.3.3, 13.3.4
Obstruction investigations, closure during D.3
Testing 13.3.3, A.13.3.3.2, A.13.3.3.5
Conventional pin rack (definition) ..... 3.3.16.1, Fig. A.3.3.16.1
Corrective action 4.1.4, 4.3, A.4.1.4
Corrosion ..... 5.2.2.1, 6.2.3, 10.2.4.2, 10.2.4.1, 10.3.7.2.1, Table 11.1; *see also* Microbiologically influenced corrosion (MIC)
Corrosion-resistant sprinklers A.5.4.1.8
Definition 3.3.30.1
Corrosive atmospheres or water supplies 5.3.1.1.2, A.5.3.1.1.2
Obstruction due to corrosion products D.1, D.2.1, D.2.6, D.5.2

-D-

Deficiency (definition) 3.3.4
Definitions ..... Chap. 3
Deluge sprinkler systems ..... Table 5.1, 5.2.4.2
Definition 3.6.4.2
Foam-water sprinkler and foam-water spray systems (definitions) ... 3.4; *see also* Foam-water sprinkler systems
Deluge valves ..... Table 13.1, 13.4.3, A.13.1, A.13.4.3.2.1 to A.13.4.3.3.3
Definition 3.5.2
Foam-water sprinkler systems 11.2.1
Water spray fixed systems ..... Table 10.1, 10.2.1.5, 10.2.2
Detection equipment, automatic .....*see* Automatic detection equipment
Discharge devices
Definition 3.3.5
Foam-water ..... Table 11.1, 11.2.5, Table 11.5.1, A.11.2.5
Discharge patterns
Deluge and preaction systems 13.4.3.2.2.3
Foam-water sprinkler systems 11.3.2.6
Water spray fixed systems 10.3.4.3, A.10.3.4.3
Discharge time
Foam-water sprinkler systems 11.3.2.5
Water spray fixed systems 10.3.4.2
Double check detector assembly (DCDA) 13.6.1.1, A.13.1
Double check valve assembly (DCVA) 13.6.1.1, A.13.1
Definition 3.3.6
Drainage
Foam-water sprinkler systems ..... Table 11.1, 11.2.8
Water spray fixed systems 10.2.8, 10.3.7.2
Drains
Component replacement action requirements ..... Table 5.5.1, Table 6.5.1, Table 10.5.1, Table 11.5.1
Low point ..... Table 5.1, 10.3.7.2
Main .....*see* Main drains
Sectional (definition) 3.3.7.2

--`,,```,,,,````-`-`,,`,,`,`,,`---

Copyright National Fire Protection Association
Provided by IHS under license with NFPA
No reproduction or networking permitted without license from IHS
Not for Resale

Drip valves ..... Table 11.5.1, A.13.1
Driver, pump 8.1.5
Dry barrel hydrants ..... Table 7.1, 7.2.2.4, 7.3.2.3, 7.3.2.6
Definition ..... 3.3.9.1, Fig. A.3.3.9.1
Dry pipe sprinkler systems
Control valve information sign .....*see* Signs, information
Definition 3.6.4.3
Gauges ..... Table 5.1, 5.2.4.2, 5.2.4.4, A.5.2.4.4
Inspection ..... Table 5.1
Maintenance 5.4.2, A.5.4.2
Obstructions 14.2.2, A.14.2.2, D.3.2, D.3.3, D.4.1, D.5.2, D.5.4
Dry pipe valves ..... Table 13.1, 13.4.4, A.13.1, A.13.4.4.1.2.3 to A.13.4.4.3.2
Dry sprinklers 5.3.1.1.1.5, 5.4.1.4.2.1, A.5.3.1.1.1.5
Definition 3.3.30.2

-E-

Early suppression fast-response (EFSR) sprinkler (definition) 3.3.30.3
Electrical safety 4.9, A.4.9
Emergency impairments 15.6
Definition 3.3.17.1
Exposed piping, private fire service mains
Inspection ..... Table 7.1, 7.2.2.1
Testing ..... Table 7.1, 7.3.1, A.7.3.1
Extended coverage sprinkler (definition) 3.3.30.4

-F-

Fall protection 4.8.2
False alarms .....*see* Supervisory service, notification to
Fire department connections ..... Table 5.1, 5.1.1, 6.3.2.1, 9.1.1, Table 13.1, 13.7
Component replacement action requirements ..... Table 10.5.1, Table 11.5.1
Definition 3.3.8
Flushing outlets, used as D.5.1
Impairments, signs indicating 10.1.4.2
Fire hose, maintenance of ..... 7.1.2; *see also* Standpipe and hose systems
Fire hydrants ..... Table 7.5.1
Definition 3.3.9, A.3.3.9
Dry barrel .....*see* Dry barrel hydrants
Maintenance ..... Table 7.1, 7.4.2, A.7.4.2.2
Monitor nozzle (definition) ..... 3.3.9.2, Fig. A.3.3.9.2
Testing ..... Table 7.1, 7.3.2
Wall .....*see* Wall hydrants
Wet barrel .....*see* Wet barrel hydrants
Fire pumps ..... Chap. 8
Auxiliary equipment 8.1.2, A.8.1.2
Component replacement action requirements ..... Table 10.5.1
Controllers ..... 8.1.6, Table 8.1, Table 8.6.1, A.8.1.6, C.3
Definition 3.6.2
Diesel engine systems ..... Table 8.1, 8.2.2(4), 8.3.1.3, 8.3.2.2(3), Table 8.5.3, Table 8.6.1
Driver ..... 8.1.5, Table 8.6.1, Table 10.1
Electrical system ..... Table 8.1, 8.2.2(3), 8.3.1.2, 8.3.2.2(2), Table 8.5.3, Table 8.6.1, Table 10.1
Energy source 8.1.4, 8.3.4.1
Impairments 5.3.3.4, 8.1.7
Inspection .... 8.1, 8.2, 8.4.1, Table 8.5.3, Table 10.1, A.8.1, A.8.2.2
Maintenance ..... 8.1, 8.5, Table 10.1, 12.3.3, 12.3.5, A.8.1, A.8.5.1
Obstruction investigation 14.2.2, A.14.2.2, D.3
Problems, possible causes of ..... Annex C
Reports 8.4, A.8.4.2
Steam systems ..... 8.2.2(5), 8.3.2.2(4), Table 8.6.1, Table 10.1, A.8.2.2(5)
Supervisory service, notification to 8.1.8
Testing ..... 4.6.3, 8.1, 8.3, 8.4, Table 8.5.3, Table 10.1, A.8.1, A.8.3, A.8.4.2
Annual ..... 8.3.3, A.8.3.3.1 to A.8.3.3.8
Component replacement testing requirements 8.6
At each flow condition ... Table 8.1, 8.3.3.1, 8.3.3.2(2), A.8.3.3.1
At no-flow condition (churn) ..... Table 8.1, 8.3.1, 8.3.3.2(1)
Results and evaluation ..... 8.3.5, A.8.3.5.1 to A.8.3.5.4
Weekly 8.3.2, A.8.3.2.2
Fire watch ..... 15.5.2(3)(b), A.15.5.2(3)(b)
Fittings .....*see* Piping
Fixed nozzle systems .....*see* Water spray fixed systems
Flow tests ... Table 6.1, 6.3.1, Table 7.1, 7.3.1, 7.3.2, 13.5.1.2, 13.5.2.2, 13.5.2.3, 13.5.3.2, 13.5.3.3, 13.5.4.2, A.6.3.1.1, A.7.3.1, A.13.5.1.2, A.13.5.2.2, A.13.5.4.2
Flushing procedures ..... Table 10.1, 14.2.2, 14.2.3.1, 14.2.4, A.14.2.2, A.14.2.4, D.4.2, D.5
Foam concentrates
Definition 3.3.10
Samples 11.2.10
Testing 11.3.5
Foam discharge devices 11.2.5, A.11.2.5
Definition 3.3.11
Foam-water spray system (definition) ..... 3.4.1; *see also* Foam-water sprinkler systems
Foam-water sprinkler systems ..... Chap. 11
Component action requirements 11.5
Definition 3.4.2
Impairments 11.1.4
Inspection ..... 11.1, 11.2, A.11.2.5 to A.11.2.9.5.6(2)
Tanks 11.2.9.4, A11.2.9.4
Maintenance 11.1, 11.4, A.11.4
Proportioners .....*see* Proportioners
Return to service after testing 11.3.6
Supervisory service, notification to 11.1.5
Testing 11.1, 11.3, A.11.3
Freezers, systems protecting .....*see* Ice obstruction prevention

-G-

Gauges
Component replacement action requirements ..... Table 5.5.1, Table 6.5.1, Table 7.5.1, Table 10.5.1, Table 11.5.1
Fire pumps .... 8.1.2, 8.2.2(5), 8.3.2.2, A.8.1.2, A.8.2.2(5), A.8.3.2.2
Sprinkler systems ..... Table 5.1, 5.2.4, 5.3.2, A.5.2.4.1, A.5.2.4.4, A.5.3.2
Standpipe and hose systems 6.3.1.5.2
Valves 13.2.7
Water tanks ..... Table 9.1, 9.3.6, Table 9.6.1

-H-

Hangers
Component replacement action requirements ..... Table 10.5.1
Foam-water sprinkler systems ..... Table 11.1, 11.2.4, Table 11.5.1
Sprinkler systems ..... Table 5.1, 5.2.3, A.5.2.3
Standpipe and hose systems ..... Table 6.5.1
Water mist systems 12.3.5
Water spray fixed systems 10.2.4.2, A.10.2.4.2
Hazardous materials 4.8.4, A.4.8.4
Hazards 4.1.6, 4.8.3
Horizontal rack (hose storage) (definition) 3.3.16.2, A.3.3.16.2
Hose .....*see* Fire hose; Standpipe and hose systems
Hose connections 5.1.4
Definition 3.3.12
Pressure-reducing valves ..... Table 13.1, 13.5.2, A.13.5.2.2
Standpipe and hose systems ..... Table 6.1, Table 6.2.2
Hose houses ..... Table 6.5.1, Table 7.1, 7.2.2.7, Table 7.5.1
Definition ..... 3.3.13, Figs. A.3.3.13(a) to (c)
Hose nozzles ..... Table 6.1, Table 6.2.2
Definition 3.3.14
Hose reel (definition) 3.3.16.3, A.3.3.16.3
Hose station (definition) 3.3.15

Copyright National Fire Protection Association
Provided by IHS under license with NFPA
No reproduction or networking permitted without license from IHS
Not for Resale

Hose storage devices ..... Table 6.1, Table 6.2.2, Table 6.5.1
Conventional pin rack (definition) 3.3.16.1
Horizontal rack (definition) 3.3.16.2
Hose reel (definition) 3.3.16.3
Semiautomatic hose rack assembly (definition) 3.3.16.4
Hose valves 13.5.6, A.13.5.6.2.1
Definition 3.5.3
Hydrants, fire .....*see* Fire hydrants
Hydraulic nameplate ..... Table 5.1, 5.2.7, A.5.2.7
Hydrostatic tests ..... Table 6.1, 6.3.2, 12.2.6, A.6.3.2.2

-I-

Ice obstruction prevention 5.2.4.4, 14.3, A.5.2.4.4
Impairments ..... 4.2, Chap. 15; *see also* System shutdown
Coordinator 15.2
Definition 3.3.17, A.3.3.17
Emergency 15.6
Definition 3.3.17.1
Equipment involved 15.4
Fire pumps 5.3.3.4, 8.1.7
Foam-water sprinkler systems 11.1.4
Preplanned programs 15.5, A.15.5
Definition 3.3.17.2
Private fire service mains 7.1.3
Restoring systems to service 12.1.6, 15.7
Sprinkler systems 5.1.2, 5.3.3.4
Standpipe and hose systems 6.1.2
Tag system 15.3, A.15.3.1, A.15.3.2
Water mist systems 12.1.3.1
Water spray fixed systems 10.1.4, A.10.1.4
Water tanks 9.1.2
Information signs .....*see* Signs, information
In-line balanced pressure proportioners ..... Table 11.1, 11.2.9.5.5, 11.4.7, A.11.2.9.5.5(1), A.11.2.9.5.5(2)
Definition ..... 3.3.27.2, Fig. A.3.3.27.2
Inspection, testing, and maintenance service (definition) 3.3.19
Inspections ..... 4.5, A.4.5; *see also* Impairments; Supervisory service, notification to
Backflow prevention assemblies 13.6.1, A.13.6.1.2
Definition 3.3.18
Fire department connections 13.7
Fire pumps ..... Table 8.1, 8.2, A.8.2.2
Foam-water sprinkler systems ..... Table 11.1, 11.2, A.11.2.5 to A.11.2.9.5.6(2)
Forms for ..... Annex B
Owner/occupant responsibilities ..... 4.1.1 to 4.1.4, 4.8.4.2, A.4.1.1 to A.4.1.4
Performance- based program 4.6.1.1.1, A.4.6.1.1.1
Private fire service mains 7.2, A.7.2.2
Sprinkler systems 5.1, 5.2, A.5.2
Standpipe and hose systems ..... Table 6.1, 6.2
Steam system conditions ..... 8.2.2(5), A.8.2.2(5)
Valves ..... Table 5.1, 13.1
Alarm 13.4.1, A.13.4.1.1, A.13.4.1.2
Automatic tank fill valves 9.5.1
Check 13.4.2.1
Deluge 13.4.3.1
Dry pipe/quick-opening devices 13.4.4.1, A.13.4.4.1.2.3
Hose 13.5.6.1
Preaction 13.4.3.1
Pressure-reducing 13.5.1, 13.5.2.1, 13.5.3.1, 13.5.4.1, 13.5.5.1, A.13.5.1.2, A.13.5.4.1
Pressure relief 13.5.7
Water mist systems 12.2, A.12.2.4
Water spray fixed systems .... Table 10.1, 10.2, A.10.2.4 to A.10.2.7

-L-

Large drop sprinklers (definition) 3.3.30.5
Line proportioners ..... Table 11.1, 11.2.9.5.3, 11.4.5, A.11.2.9.5.3(1), A.11.2.9.5.3(2)
Definition ..... 3.3.27.3, Fig. A.3.3.27.3
Listed (definition) 3.2.3, A.3.2.3

-M-

Main drains
Component replacement action requirements ..... Table 5.5.1, Table 6.5.1, Table 10.5.1
Definition 3.3.7.1
Test ..... Table 5.1, 5.5.1.2, Table 6.1, 6.3.1.5, 6.5.1.2, 7.5.1.3, 9.6.1.2, 10.3.7.1, 10.5.1.2, Table 11.5.1, 11.5.3, Table 13.1,13.2.5, A.13.2.5
Mainline strainers
Foam-water sprinkler systems 11.2.7.1
Private fire service mains ..... 7.2.2.3, Table 7.5.1, A.7.2.2.3
Water spray fixed systems 10.2.1.7, 10.2.7, A.10.2.7
Mains
Private fire service .....*see* Private fire service mains
Yard 14.2.2, A.14.2.2, D.3, D.5.1
Maintenance ..... 4.6.3, 4.7, 6.4, A.4.7; *see also* Impairments
Backflow prevention assemblies 13.6.3
Definition 3.3.20
Fire pumps 8.5, A.8.5.1
Foam-water sprinkler systems 11.4, A.11.4
Forms for ..... Annex B
Owner/occupant responsibilities ..... 4.1.1 to 4.1.4, 4.8.4.2, A.4.1.1 to A.4.1.4
Performance-based program 4.6.1.1.1, A.4.6.1.1.1
Private fire service mains 7.4, A.7.4.2.2
Sprinkler systems ..... 5.1, 5.4, A.5.4.1.1 to A.5.4.4
Standpipe and hose systems ..... Table 6.1, 6.2.2, 6.2.3, 6.4
Valves ..... Table 5.1, Table 6.1, 12.3.3, 12.3.5, 13.1
Alarm 13.4.1.3
Check 13.4.2.2
Control ..... Table 6.1, 13.3.4
Deluge 13.4.3.3, A.13.4.3.3.3
Dry pipe/quick-opening devices 13.4.4.3, A.13.4.4.3.2
Hose 13.5.6.3
Preaction 13.4.3.3, A.13.4.3.3.3
Pressure relief 13.5.8
Water mist systems ..... Table 12.2.2, 12.3, A.12.3.10
Water spray fixed systems .... Table 10.1, 10.2, A.10.2.4 to A.10.2.7
Water tanks ..... Table 9.1, 9.4
Manual operation
Definition 3.3.21
Foam-water sprinkler systems ..... Table 11.1, 11.3.4, Table 11.5.1
Preaction and deluge valves 13.4.3.2.8
Standpipe and hose systems 6.3.2.1, 6.3.2.2.1
Definition 3.3.31.2
Water spray fixed systems 10.3.6
Marine sprinkler systems 5.4.4, A.5.4.4
Master pressure reducing valve ..... 13.5.4, A.13.5.4.1 to A.13.5.4.3
Definition 3.5.5.1, A.3.5.5.1
Materials, changes in 4.1.5, 12.1.4.2, A.4.1.5
Measurement, units of 1.4, A.1.4
Microbiologically influenced corrosion (MIC) D.1, D.2.1, D.2.6, D.2.7
Monitor nozzle hydrant (definition) ..... 3.3.9.2, Fig. A.3.3.9.2
Monitor nozzles
Component replacement action requirements ..... Table 7.5.1
Definition .... 3.3.22.1, A.3.3.22.1, Fig. A.3.3.22.1(a), Fig. A.3.3.22.1(b)
Inspection ..... Table 7.1, 7.2.2.6
Maintenance ..... Table 7.1, 7.4.3
Testing ..... Table 7.1, 7.3.3
Multiple systems, testing 10.3.5, 11.3.3, 13.4.3.2.7

-N-

Nameplate, hydraulic 5.2.7, A.5.2.7
Nozzles
Hose .....*see* Hose nozzles
Monitor .....*see* Monitor nozzles
Sprinkler (definition) 3.3.30.6
Water mist 12.3.5, 12.3.6, 12.3.10, A.12.3.10
Water spray .....*see* Water spray nozzles

Copyright National Fire Protection Association
Provided by IHS under license with NFPA
No reproduction or networking permitted without license from IHS
Not for Resale

-O-

Obstructions
Ice 5.2.4.4, 14.3, A.5.2.4.4
Investigation ..... Table 5.1, Chap. 14, Annex D
Procedure D.3
Sources of obstruction D.2
Prevention 10.2.6.2, 14.2, 14.3, A.10.2.6.2, A.14.2, D.4
Occupancy, changes in 4.1.5, 12.1.4.2, 12.1.5, A.4.1.5
Old-style/conventional sprinklers 5.4.1.1.1, A.5.4.1.1.1
Definition 3.3.30.7
Open sprinkler (definition) 3.3.30.8
Operation
Automatic (definition) 3.3.3
Manual ..... *see* Manual operation
Orifice plate proportioning ..... 11.2.9.5.6, A.11.2.9.5.6(1), A.11.2.9.5.6(2)
Definition 3.3.23
Ornamental/decorative sprinkler (definition) 3.3.30.9
Owner/occupant responsibilities ..... 4.1, 4.8.4.2, 12.1, A.4.1.1 to A.4.1.5

-P-

Pendent sprinklers D.2.5, D.5.2
Definition 3.3.30.10
Piers, sprinklers for 5.4.1.1.2
Piping
Flushing ..... Table 10.1, 14.2.2, 14.2.3.1, 14.2.4, A.14.2.2, A.14.2.4, D.4.2, D.5
Foam-water sprinkler systems ..... Table 11.1, 11.2.3, Table 11.5.1
Obstructions ..... *see* Obstructions
Private fire service mains ..... Table 7.5.1
Exposed ..... Table 7.1, 7.2.2.1, 7.3.1, A.7.3.1
Underground ..... Table 7.1, 7.2.2.2, 7.3.1, A.7.3.1
Sprinkler systems ..... Table 5.1, 5.2.2, Table 5.5.1, A.5.2.2, D.3 to D.5
Standpipe and hose systems ..... Table 6.1, Table 6.2.2, Table 6.5.1
Water spray fixed systems ..... Table 10.1, 10.2.4, 10.2.6, Table 10.5.1, A.10.2.4, A.10.2.6.2
Preaction sprinkler systems
Control valve information sign ..... *see* Signs, information
Definition 3.6.4.4
Gauges ..... Table 5.1, 5.2.4.2, 5.2.4.4, A.5.2.4.4
Inspection ..... Table 5.1
Obstructions D.4.1
Preaction valves ..... Table 13.1, 13.4.3, A.13.4.3.2.1 to A.13.4.3.3.3
Preplanned impairments 15.5, A.15.5
Definition 3.3.17.2
Pressure control valves
Definition 3.5.4
Standpipe and hose systems ..... Table 6.1
Pressure readings
Deluge and preaction systems 13.4.3.2.6
Foam-water sprinkler systems 11.3.2.7, A.11.3.2.7
Water spray fixed systems 10.3.4.4
Pressure-reducing valves ..... Table 6.1, Table 13.1, 13.5, 13.5.5, A.13.5.1.2 to A.13.5.6.2.2; *see also* Relief valves (fire pump)
Definition 3.5.5
Fire pumps ..... Table 13.1
Hose connection ..... Table 13.1, 13.5.2, A.13.5.2.2
Hose rack assembly ..... Table 13.1, 13.5.3
Master pressure reducing valve ..... 13.5.4, A.13.5.4.1 to A.13.5.4.3
Definition 3.5.5.1, A.3.5.5.1
Sprinkler ..... Table 13.1, 13.5.1, A.13.5.1.2
Standpipe and hose systems 6.3.1.4
Pressure regulating devices ..... Table 6.1, 6.3.1.4; *see also* Pressure control valves; Pressure-reducing valves; Relief valves (fire pump)
Definition 3.3.24, A.3.3.24
Pressure relief valves ..... *see* Relief valves
Pressure restricting devices (definition) 3.3.25
Pressure vacuum vents ..... Table 11.1, 11.4.8
Definition ..... 3.3.26, Fig. A.3.3.26
Private fire service mains ..... Chap. 7
Component action requirements 7.5
Definition 3.6.3, A.3.6.3
Impairments 7.1.3
Inspection 7.1, 7.2, A.7.2.2
Maintenance 7.1, 7.4, A.7.4.2.2
Supervisory service, notification to 7.1.4
Testing 7.1, 7.3, A.7.3.1
Process, changes in 4.1.5, 12.1.4.2, A.4.1.5
Proportioners ..... Table 11.1, 11.2.9, Table 11.5.1, A.11.2.9
Definitions ..... 3.3.27.1 to 3.3.27.5, Fig. A.3.3.27.1
Pumps ..... *see* Fire pumps
Purpose of standard 1.2, A.1.2

-Q-

Qualified (definition) 3.3.28
Quick-opening devices ..... Table 13.1, 13.4.4, A.13.4.4.1.2.3 to A.13.4.4.3.2
Quick-response early suppression (QRES) sprinklers (definition) 3.3.30.11
Quick-response extended coverage sprinklers (definition) 3.3.30.12
Quick-response (QR) sprinklers 5.4.1.3, A.5.4.1.3
Definition 3.3.30.13

-R-

Recessed sprinklers (definition) 3.3.30.14
Records 4.4, A.4.4.1, A.4.4.3
Owner/occupant responsibilities 4.4.3, A.4.4.3
Valves 13.2.8
Reduced-pressure detector assemblies (RPDA) 13.6.1.2, A.13.1
Reduced-pressure principle backflow prevention assemblies (RPBA) 13.6.1.2, A.13.1
Definition 3.3.29
References ..... Chap. 2, Annex E
Relief valves (fire pump)
Circulation relief ..... 8.3.3.2(1), Table 13.1, 13.5.7.1
Pressure relief ... 8.3.3.2(1), 8.3.3.3, Table 13.1, 13.5.7.2, A.8.3.3.3
Repairs, reconditioning, replacements, or adjustments ..... 4.1.4, A.4.1.4; *see also* Maintenance
Fire department connections 13.7.3
Fire pumps 8.6.1
Foam-water sprinkler systems 11.5.1
Private fire service mains 7.5.1
Sprinklers 5.4.1.1, A.5.4.1.1
Sprinkler systems 5.5.1
Standpipe and hose systems 6.5.1
Water mist systems 12.1.3
Water spray fixed systems 10.5.1
Water storage tanks 9.6.1
Residential sprinkler (definition) 3.3.30.15
Response time
Foam-water sprinkler systems 11.3.2.4
Water spray fixed systems 10.3.4.1, 10.4.5, A.10.3.4.1

-S-

Safety 4.8, 4.9, A.4.8.4, A.4.9
Scope of standard 1.1, A.1.1
Sectional drains (definition) 3.3.7.2
Seismic braces ..... Table 5.1, 5.2.3, Table 6.5.1, Table 10.5.1, Table 11.5.1, A.5.2.3
Semiautomatic hose rack assembly (definition) ..... 3.3.16.4, Fig. A.3.3.16.4
Shall (definition) 3.2.4
Should (definition) 3.2.5
Shutdown, system ..... *see* Impairments; System shutdown
Shutoff valves 4.1.7

Copyright National Fire Protection Association
Provided by IHS under license with NFPA
No reproduction or networking permitted without license from IHS
Not for Resale

Signs, information ..... 4.1.8, Table 6.5.1, Table 7.5.1, 10.1.4.2, Table 10.5.1, Table 11.5.1
Special sprinklers 5.4.1.3, A.5.4.1.3
Definition 3.3.30.16
Spray coating areas, sprinklers protecting 5.4.1.7
Spray sprinklers 5.4.1.1.1, A.5.4.1.1.1
Definition 3.3.30.17
Standard spray sprinkler (definition) 3.3.30.18
Sprinklers .....*see also* Dry sprinklers; Pendent sprinklers; Quick-response (QR) sprinklers
Component replacement action requirements ..... Table 5.5.1
Concealed spaces, in 5.2.1.1.4, A.5.2.1.1.4
Corrosion-resistant A.5.4.1.8
Definition 3.3.30.1
Definitions ..... 3.3.30.1 to 3.3.30.19
Inspection ..... Table 5.1, 5.2.1, A.5.2.1.1, A.5.2.1.2
Maintenance ..... 5.4.1, A.5.4.1.1 to A.5.4.4
Nozzles (definition) 3.3.30.6
Old-style 5.4.1.1.1, A.5.4.1.1.1
Definition 3.3.30.7
Spare ..... Table 5.1, 5.2.1.3, 5.4.1.4, 5.4.1.5, A.5.4.1.4
Spray 5.4.1.1.1, A.5.4.1.1.1
Definition 3.3.30.17
Testing ..... Table 5.1, 5.3.1, A.5.3.1
Upright (definition) 3.3.30.19
Sprinkler systems ..... Chap. 5; *see also* Foam-water sprinkler systems
Combined standpipe and sprinkler (definition) 3.6.1
Component action requirements 5.5
Definition 3.6.4, A.3.6.4
Flushing .....*see* Flushing procedures
Impairments 5.1.2
Inspection 5.1, 5.2, A.5.2
Installation 5.4.3, 5.5.1.1, A.5.4.3
Maintenance ..... 5.1, 5.4, A.5.4.1.1 to A.5.4.4
Marine systems 5.4.4, A.5.4.4
Obstructions 14.2.2, A.14.2.2
Piping .....*see* Piping
Supervisory service, notification to 5.1.3
Testing ..... 5.1, 5.3, 5.4.3, A.5.3.1 to A.5.3.4.1, A.5.4.3
Standard balanced pressure proportioners ..... Table 11.1, 11.2.9.5.4, 11.4.6, A.11.2.9.5.4(1), A.11.2.9.5.4(2)
Definition ..... 3.3.27.4, Fig. A.3.3.27.4
Standard (definition) 3.2.6
Standard pressure proportioners 11.2.9.5.1, 11.4.3, A.11.2.9.5.1, A.11.4.3.2
Definition ..... 3.3.27.5, Fig. A.3.3.27.5
Standard spray sprinkler (definition) 3.3.30.18
Standpipe and hose systems ..... Chap. 6
Alarm devices 6.3.3
Combined sprinkler and standpipe system (definition) 3.6.1
Component action requirements 6.5
Components ..... 6.2.1, Table 6.2.2
Definition 3.3.31, A.3.3.31
Dry standpipe system 6.3.2.1
Definition 3.3.31.1
Impairments 6.1.2
Inspection 6.1, 6.2
Maintenance 6.1, 6.2.2, 6.2.3, 6.4
Manual standpipe system 6.3.2.1, 6.3.2.2.1
Definition 3.3.31.2
System types
Class I system (definition) 3.3.31.1.1
Class II system (definition) 3.3.31.1.2
Class III system (definition) 3.3.31.1.3
Testing 6.1, 6.2.2, 6.3, A.6.3.1.1, A.6.3.2.2
Wet standpipe system 6.3.2.2.1
Definition 3.3.31.3
Storage tanks .....*see* Water tanks
Strainers
Definition 3.3.32, A.3.3.32
Foam concentrate 11.2.7.2
Foam-water sprinkler systems 11.2.7
Mainline .....*see* Mainline strainers
Nozzle 10.2.1.6
Valves ..... Table 13.1, A.13.1
Water mist systems ..... 12.3.3, Table 12.3.4, 12.3.11
Water spray fixed systems ..... Table 10.1
Water tank automatic tank fill valves 9.5.2.3
Suction screens ..... 8.2.2(2), 8.3.3.7, A.8.3.3.7, C.1.2
Obstructions D.3, D.4.3
Supervision (definition) 3.3.33
Supervisory service, notification to
Fire pumps 8.1.8
Foam-water sprinkler systems 11.1.5
Private fire service mains 7.1.4
Sprinkler systems 5.1.3
Water tanks 9.1.3, A.9.1.3
Supervisory signal devices ..... Table 5.1, Table 6.1, 6.3.3
Supports ..... 10.2.4.2, Table 11.1, 11.2.4, A.10.2.4.2
System shutdown .....*see also* Impairments
Notification of system shutdown 4.1.3
Owner/occupant responsibilities 4.1.3
Restoring systems to service 4.1.3.2
Shutdown procedures 4.1.7
Shutoff valves, location of 4.1.7
Sprinkler inspection 5.2.1.1.5, 5.2.2.4
System valves ..... 13.4, A.13.4.1.1 to A.13.4.4.3.2

-T-

Tanks, water .....*see* Water tanks
Temporary fire protection ..... 15.5.2(3)(c), A.15.5.2(3)(c)
Testing .... 4.6, A.4.6.1 to A.4.6.5; *see also* Flow tests; Hydrostatic tests; Impairments; Supervisory service, notification to
Acceptance 5.4.3, A.5.4.3
Backflow prevention assemblies 13.6.2, A.13.6.2.1
Definition 3.3.34
Fire pumps .....*see* Fire pumps
Foam-water sprinkler systems ..... Table 11.1, 11.3, A.11.3
Forms for ..... Annex B
Hydrants ..... Table 7.1, 7.3.2
Main drain test .....*see* Main drains
Owner/occupant responsibilities ..... 4.1.1 to 4.1.4, 4.8.4.2, A.4.1.1 to A.4.1.4
Performance- based program 4.6.1.1.1, A.4.6.1.1.1
Private fire service mains ..... Table 7.1, 7.3, A.7.3.1
Sprinklers ..... Table 5.1, 5.3.1, A.5.3.1
Sprinkler systems ..... 5.1, 5.3, 5.4.3, A.5.3.1 to A.5.3.4.1, A.5.4.3
Standpipe and hose systems ..... Table 6.1, 6.2.2, 6.3, A.6.3.1.1, A.6.3.2.2
Valves 13.1, 13.2.5, A.13.2.5
Control 13.3.3, A.13.3.3.2, A.13.3.3.5
Deluge ..... 13.4.3.2, A.13.4.3.2.1 to A.13.4.3.2.11
Dry pipe/quick-opening devices ..... 13.4.4.2, A.13.4.4.2.1 to A.13.4.4.2.4
Hose 13.5.6.2, A.13.5.6.2.1
Preaction ..... 13.4.3.2, A.13.4.3.2.1 to A.13.4.3.2.11
Pressure-reducing ... 13.5.1, 13.5.2.2, 13.5.2.3, 13.5.3.2, 13.5.3.3, 13.5.5.2, A.13.5.1.2, A.13.5.2.2
Pressure relief 13.5.7.2.2
Water mist systems 12.2, A.12.2.4
Water spray fixed systems ..... Table 10.1, 10.2.1.3, 10.3, 10.4, A.10.3.3 to A.10.3.4.3.1
Water tanks ..... 9.1, Table 9.1, 9.3, 9.5.3, Table 10.1, A.9.1, A.9.3.1 to A.9.3.5

-U-

Ultra-high-speed water spray systems operational tests 10.4
Underground piping, private fire service mains
Inspection 7.2.2.2
Testing 7.3.1, A.7.3.1
Units of measurement 1.4, A.1.4
Upright sprinklers (definition) 3.3.30.19
Use, changes in 4.1.5, A.4.1.5

Copyright National Fire Protection Association
Provided by IHS under license with NFPA
No reproduction or networking permitted without license from IHS
Not for Resale

-V-

Valves … Chap. 13; *see also* Alarm valves; Check valves; Control valves; Deluge valves; Dry pipe valves; Hose valves; Pressure control valves; Pressure-reducing valves; Relief valves (fire pump)
- Automatic tank fill valves ..... 9.5, Table 9.6.1
- Ball ..... Table 11.5.1, A.13.1
- Check 13.4.2
- Component action requirements ..... Table 6.5.1, Table 7.5.1, Table 9.6.1, Table 10.5.1, Table 11.5.1
- Drip ..... Table 11.5.1, A.13.1
- Flushing, used for D.5.3
- Gauges 13.2.7
- Inspection ..... *see* Inspections
- Location 4.1.7
- Maintenance ..... *see* Maintenance
- Preaction ..... 13.4.3, A.13.4.3.2.1 to A.13.4.3.3.3
- Protection of 13.2.3
- Records 13.2.8
- Return to service after testing 13.4.3.2.9
- Shutoff 4.1.7
- System ..... 13.4, A.13.4.1.1 to A.13.4.4.3.2
- Testing ..... *see* Testing

Valve supervisory devices ..... Table 5.1, Table 6.1, Table 11.5.1, 13.3.3.5, A.13.3.3.5
- Component replacement action requirements ..... Table 5.5.1, Table 6.5.1, Table 7.5.1
- Water tanks ..... Table 9.6.1

Ventilating systems, sprinklers for 5.4.1.9

Vents, pressure vacuum 11.4.8

-W-

Wall hydrants ..... Table 7.1, 7.2.2.4, 7.3.2.3
- Definition ..... 3.3.9.3, Fig. A.3.3.9.3

Waterflow alarms ..... Table 13.1, 13.2.6, A.13.1
- Foam-water sprinkler systems .... Table 11.1, 11.3.1.1, Table 11.5.1
- Sprinkler systems ..... Table 5.1, 5.3.3, Table 5.5.1, A.5.3.3.2, A.5.3.3.5
- Standpipe and hose systems ..... Table 6.1, 6.3.3, Table 6.5.1
- Water mist systems 12.3.1.3
- Water spray fixed systems ..... Table 10.5.1

Water mist systems ..... Chap. 12
- High pressure cylinders 12.2.6
- Inspection, maintenance, and testing 12.2, 12.3, A.12.2.4, A.12.3.10
- Responsibility of owner or occupant 12.1
- Training 12.4

Water spray (definition) 3.3.35, A.3.3.35

Water spray fixed systems ..... Chap. 10; *see also* Fire pumps; Water tanks
- Component action requirements 10.5
- Definition 3.6.5
- Foam-water spray system (definition) .... 3.4.1; *see also* Foam-water sprinkler systems
- Impairments 10.1.4, A.10.1.4
- Inspection and maintenance procedures ..... 10.1, 10.2, A.10.2.4 to A.10.2.7
  - Automatic detection equipment 10.2.3, 10.4.2
  - Deluge valves 10.2.1.5, 10.2.2
  - Drainage 10.2.8
  - Piping 10.2.4, 10.2.6, A.10.2.4, A.10.2.6.2
  - Strainers 10.2.7, A.10.2.7
  - Valves ..... 10.4.4, Chap. 13
  - Water supply 10.2.6, A.10.2.6.2
- Manual operations 10.3.6
- Return to service after testing 10.3.7
- Supervisory service, notification to 10.3.2.1
- Testing ..... 10.1, 10.2.1.3, 10.3, 10.4, A.10.3.3 to A.10.3.4.3.1

Water spray nozzles ..... 5.4.1.9, Table 10.1, 10.2.5, 10.3.4.3, A.10.2.5, A.10.3.4.3
- Component replacement action requirements ..... Table 10.5.1
- Definition 3.3.22.2, A.3.3.22.2

Water supply
- Definition 3.3.36
- Foam-water sprinkler systems 11.2.6, A.11.2.6.2
- Obstructions ..... Annex D
- Water spray fixed systems 10.2.6, 10.3.5, 10.3.7.1, A.10.2.6.2

Water tanks ..... Chap. 9
- Alarm devices ..... Table 9.1, 9.2.1, 9.2.3, 9.2.4.2, 9.3.3, 9.3.5, Table 9.6.1, A.9.2.1.1, A.9.3.5
- Component action requirements 9.6
- Definition 3.6.6
- ESCF, maintenance of ..... Table 9.1, 9.4.6
- Heating systems ..... Table 9.1, 9.2.3, Table 9.6.1
- Impairments 9.1.2
- Inspection ..... 9.1, 9.2, 9.5.1, Table 10.1, A.9.1, A.9.2.1.1 to A.9.2.6.5
- Maintenance ..... 9.1, 9.4, 9.5.2, Table 12.3.4, A.9.1
- Obstruction investigations D.3
- Pressure tanks ..... Table 9.1, 9.2.2, Table 10.1
- Supervisory service, notification to 9.1.3, A.9.1.3
- Testing ..... 9.1, 9.3, 9.5.3, Table 10.1, A.9.1, A.9.3.1 to A.9.3.5

Wet barrel hydrants ..... Table 7.1, 7.2.2.5
- Definition ..... 3.3.9.4, Fig. A.3.3.9.4

Wet pipe sprinkler systems
- Building inspection 5.2.5
- Definition 3.6.4.5, A.3.6.4.5
- Gauges 5.2.4.1, A.5.2.4.1
- Inspection ..... Table 5.1
- Obstructions 14.2.2, A.14.2.2, D.2.5, D.3.4, D.5.4

Wharves, sprinklers for 5.4.1.1.2

-Y-

Yard mains 14.2.2, A.14.2.2, D.3, D.5.1

-Z-

Zebra mussels, obstruction by D.4.6

--`,,```,,,,````-`-`,,`,,`,`,,`---

Copyright National Fire Protection Association
Provided by IHS under license with NFPA
No reproduction or networking permitted without license from IHS
Not for Resale

Sequence of Events Leading to Issuance of an NFPA Committee Document

Step 1: Call for Proposals

- Proposed new Document or new edition of an existing Document is entered into one of two yearly revision cycles, and a Call for Proposals is published.

Step 2: Report on Proposals (ROP)

- Committee meets to act on Proposals, to develop its own Proposals, and to prepare its Report.
- Committee votes by written ballot on Proposals. If two-thirds approve, Report goes forward. Lacking two-thirds approval, Report returns to Committee.
- Report on Proposals (ROP) is published for public review and comment.

Step 3: Report on Comments (ROC)

- Committee meets to act on Public Comments to develop its own Comments, and to prepare its report.
- Committee votes by written ballot on Comments. If two-thirds approve, Report goes forward. Lacking two-thirds approval, Report returns to Committee.
- Report on Comments (ROC) is published for public review.

Step 4: Technical Report Session

- "*Notices of intent to make a motion"* are filed, are reviewed, and valid motions are certified for presentation at the Technical Report Session. ("Consent Documents" that have no certified motions bypass the Technical Report Session and proceed to the Standards Council for issuance.)
- NFPA membership meets each June at the Annual Meeting Technical Report Session and acts on Technical Committee Reports (ROP and ROC) for Documents with "certified amending motions."
- Committee(s) vote on any amendments to Report approved at NFPA Annual Membership Meeting.

Step 5: Standards Council Issuance

- Notification of intent to file an appeal to the Standards Council on Association action must be filed within 20 days of the NFPA Annual Membership Meeting.
- Standards Council decides, based on all evidence, whether or not to issue Document or to take other action, including hearing any appeals.

Committee Membership Classifications

The following classifications apply to Technical Committee members and represent their principal interest in the activity of the committee.

M *Manufacturer:* A representative of a maker or marketer of a product, assembly, or system, or portion thereof, that is affected by the standard.

U *User:* A representative of an entity that is subject to the provisions of the standard or that voluntarily uses the standard.

I/M *Installer/Maintainer:* A representative of an entity that is in the business of installing or maintaining a product, assembly, or system affected by the standard.

L *Labor:* A labor representative or employee concerned with safety in the workplace.

R/T *Applied Research/Testing Laboratory:* A representative of an independent testing laboratory or independent applied research organization that promulgates and/or enforces standards.

E *Enforcing Authority:* A representative of an agency or an organization that promulgates and/or enforces standards.

I *Insurance:* A representative of an insurance company, broker, agent, bureau, or inspection agency.

C *Consumer:* A person who is, or represents, the ultimate purchaser of a product, system, or service affected by the standard, but who is not included in the *User* classification.

SE *Special Expert:* A person not representing any of the previous classifications, but who has a special expertise in the scope of the standard or portion thereof.

NOTES;
1. "Standard" connotes code, standard, recommended practice, or guide.
2. A representative includes an employee.
3. While these classifications will be used by the Standards Council to achieve a balance for Technical Committees, the Standards Council may determine that new classifications of members or unique interests need representation in order to foster the best possible committee deliberations on any project. In this connection, the Standards Council may make appointments as it deems appropriate in the public interest, such as the classification of "Utilities" in the National Electrical Code Committee.
4. Representatives of subsidiaries of any group are generally considered to have the same classification as the parent organization.

--`,,```,,,,````-`-`,,`,,`,`,,`---
Copyright National Fire Protection Association
Provided by IHS under license with NFPA
No reproduction or networking permitted without license from IHS
Not for Resale

NFPA Technical Committee Document Proposal Form

NOTE: All Proposals must be received by 5:00 pm EST/EDST on the published Proposal Closing Date.

For further information on the standards-making process, please contact the Codes and Standards Administration at 617-984-7249 or visit www.nfpa.org/codes.

For technical assistance, please call NFPA at 1-888-344-3555.

FOR OFFICE USE ONLY

Log #:

Date Rec'd:

Please indicate in which format you wish to receive your ROP/ROC ☐ **electronic** ☐ **paper** ☒ **download**
(Note: If choosing the download option, you must view the ROP/ROC from our website; no copy will be sent to you.)

Date April 1, 200X **Name** John J. Doe **Tel. No.** 716-555-1234

Company Air Canada Pilot's Association

Street Address 123 Summer Street Lane **City** Lewiston **State** NY **Zip** 14092

Please indicate organization represented (if any)

1. (a) NFPA Document Title National Fuel Gas Code **NFPA No. & Year** 54, 200X Edition

(b) Section/Paragraph 3.3

2. Proposal Recommends (check one): ☐ new text ☒ revised text ☐ deleted text

3. Proposal (include proposed new or revised wording, or identification of wording to be deleted): [Note: Proposed text should be in legislative format; i.e., use underscore to denote wording to be inserted (inserted wording) and strike-through to denote wording to be deleted (~~deleted wording~~).]

Revise definition of effective ground-fault current path to read:

3.3.78 Effective Ground-Fault Current Path. An intentionally constructed, permanent, low impedance electrically conductive path designed and intended to carry ~~underground~~ electric fault current ~~conditions~~ from the point of a ground fault on a wiring system to the electrical supply source.

4. Statement of Problem and Substantiation for Proposal: (Note: State the problem that would be resolved by your recommendation; give the specific reason for your Proposal, including copies of tests, research papers, fire experience, etc. If more than 200 words, it may be abstracted for publication.)

Change uses proper electrical terms.

5. Copyright Assignment

(a) ☐ **I am the author of the text or other material (such as illustrations, graphs) proposed in this Proposal.**

(b) ☒ **Some or all of the text or other material proposed in this Proposal was not authored by me. Its source is as follows** (please identify which material and provide complete information on its source)**:**

ABC Co.

I agree that any material that I author, either individually or with others, in connection with work performed by an NFPA Technical Committee shall be considered to be works made for hire for the NFPA. To the extent that I retain any rights in copyright as to such material, or as to any other material authored by me that I submit for the use of an NFPA Technical Committee in the drafting of an NFPA code, standard, or other NFPA document, I hereby grant and assign all and full rights in copyright to the NFPA. I further agree and acknowledge that I acquire no rights in any publication of the NFPA and that copyright and all rights in materials produced by NFPA Technical Committees are owned by the NFPA and that the NFPA may register copyright in its own name.

Signature (Required)

PLEASE USE SEPARATE FORM FOR EACH PROPOSAL • NFPA Fax: (617) 770-3500

Mail to: Secretary, Standards Council, National Fire Protection Association, 1 Batterymarch Park, Quincy, MA 02169-7471

6/8/2007

SAMPLE

--`,,```,,,,````-`-`,,`,,`,`,,`---

Copyright National Fire Protection Association
Provided by IHS under license with NFPA
No reproduction or networking permitted without license from IHS

Not for Resale

NFPA Technical Committee Document Proposal Form

NOTE: All Proposals must be received by 5:00 pm EST/EDST on the published Proposal Closing Date.

For further information on the standards-making process, please contact the Codes and Standards Administration at 617-984-7249 or visit www.nfpa.org/codes.

For technical assistance, please call NFPA at 1-888-344-3555.

FOR OFFICE USE ONLY

Log #: _____

Date Rec'd: _____

Please indicate in which format you wish to receive your ROP/ROC ☐ electronic ☐ paper ☐ download
(Note: If choosing the download option, you must view the ROP/ROC from our website; no copy will be sent to you.)

Date _____ **Name** _____ **Tel. No.** _____

Company _____

Street Address _____ **City** _____ **State** _____ **Zip** _____

Please indicate organization represented (if any) _____

1. (a) NFPA Document Title _____ **NFPA No. & Year** _____

(b) Section/Paragraph _____

2. Proposal Recommends (check one): ☐ new text ☐ revised text ☐ deleted text

3. Proposal (include proposed new or revised wording, or identification of wording to be deleted): [Note: Proposed text should be in legislative format; i.e., use underscore to denote wording to be inserted (inserted wording) and strike-through to denote wording to be deleted (~~deleted wording~~).]

4. Statement of Problem and Substantiation for Proposal: (Note: State the problem that would be resolved by your recommendation; give the specific reason for your Proposal, including copies of tests, research papers, fire experience, etc. If more than 200 words, it may be abstracted for publication.)

5. Copyright Assignment

(a) ☐ I am the author of the text or other material (such as illustrations, graphs) proposed in this Proposal.

(b) ☐ Some or all of the text or other material proposed in this Proposal was not authored by me. Its source is as follows (please identify which material and provide complete information on its source)**:**

_____

I agree that any material that I author, either individually or with others, in connection with work performed by an NFPA Technical Committee shall be considered to be works made for hire for the NFPA. To the extent that I retain any rights in copyright as to such material, or as to any other material authored by me that I submit for the use of an NFPA Technical Committee in the drafting of an NFPA code, standard, or other NFPA document, I hereby grant and assign all and full rights in copyright to the NFPA. I further agree and acknowledge that I acquire no rights in any publication of the NFPA and that copyright and all rights in materials produced by NFPA Technical Committees are owned by the NFPA and that the NFPA may register copyright in its own name.

Signature (Required) _____

PLEASE USE SEPARATE FORM FOR EACH PROPOSAL • NFPA Fax: (617) 770-3500

Mail to: Secretary, Standards Council, National Fire Protection Association, 1 Batterymarch Park, Quincy, MA 02169-7471

6/8/2007

Copyright National Fire Protection Association
Provided by IHS under license with NFPA
No reproduction or networking permitted without license from IHS
Not for Resale