NFPA 24

Standard for the Installation of Private Fire Service Mains and Their Appurtenances

2007 Edition

NFPA, 1 Batterymarch Park, Quincy, MA 02169-7471
An International Codes and Standards Organization

Copyright National Fire Protection Association
Provided by IHS under license with NFPA
No reproduction or networking permitted without license from IHS

Not for Resale

IMPORTANT NOTICES AND DISCLAIMERS CONCERNING NFPA DOCUMENTS

NOTICE AND DISCLAIMER OF LIABILITY CONCERNING THE USE OF NFPA DOCUMENTS

NFPA codes, standards, recommended practices, and guides, of which the document contained herein is one, are developed through a consensus standards development process approved by the American National Standards Institute. This process brings together volunteers representing varied viewpoints and interests to achieve consensus on fire and other safety issues. While the NFPA administers the process and establishes rules to promote fairness in the development of consensus, it does not independently test, evaluate, or verify the accuracy of any information or the soundness of any judgments contained in its codes and standards.

The NFPA disclaims liability for any personal injury, property or other damages of any nature whatsoever, whether special, indirect, consequential or compensatory, directly or indirectly resulting from the publication, use of, or reliance on this document. The NFPA also makes no guaranty or warranty as to the accuracy or completeness of any information published herein.

In issuing and making this document available, the NFPA is not undertaking to render professional or other services for or on behalf of any person or entity. Nor is the NFPA undertaking to perform any duty owed by any person or entity to someone else. Anyone using this document should rely on his or her own independent judgment or, as appropriate, seek the advice of a competent professional in determining the exercise of reasonable care in any given circumstances.

The NFPA has no power, nor does it undertake, to police or enforce compliance with the contents of this document. Nor does the NFPA list, certify, test or inspect products, designs, or installations for compliance with this document. Any certification or other statement of compliance with the requirements of this document shall not be attributable to the NFPA and is solely the responsibility of the certifier or maker of the statement.

Copyright National Fire Protection Association
Provided by IHS under license with NFPA
No reproduction or networking permitted without license from IHS
Not for Resale

ADDITIONAL NOTICES AND DISCLAIMERS

Updating of NFPA Documents

Users of NFPA codes, standards, recommended practices, and guides should be aware that these documents may be superseded at any time by the issuance of new editions or may be amended from time to time through the issuance of Tentative Interim Amendments. An official NFPA document at any point in time consists of the current edition of the document together with any Tentative Interim Amendments and any Errata then in effect. In order to determine whether a given document is the current edition and whether it has been amended through the issuance of Tentative Interim Amendments or corrected through the issuance of Errata, consult appropriate NFPA publications such as the National Fire Codes® Subscription Service, visit the NFPA website at www.nfpa.org, or contact the NFPA at the address listed below.

Interpretations of NFPA Documents

A statement, written or oral, that is not processed in accordance with Section 6 of the Regulations Governing Committee Projects shall not be considered the official position of NFPA or any of its Committees and shall not be considered to be, nor be relied upon as, a Formal Interpretation.

Patents

The NFPA does not take any position with respect to the validity of any patent rights asserted in connection with any items which are mentioned in or are the subject of NFPA codes, standards, recommended practices, and guides, and the NFPA disclaims liability for the infringement of any patent resulting from the use of or reliance on these documents. Users of these documents are expressly advised that determination of the validity of any such patent rights, and the risk of infringement of such rights, is entirely their own responsibility.

NFPA adheres to applicable policies of the American National Standards Institute with respect to patents. For further information contact the NFPA at the address listed below.

Law and Regulations

Users of these documents should consult applicable federal, state, and local laws and regulations. NFPA does not, by the publication of its codes, standards, recommended practices, and guides, intend to urge action that is not in compliance with applicable laws, and these documents may not be construed as doing so.

Copyrights

This document is copyrighted by the NFPA. It is made available for a wide variety of both public and private uses. These include both use, by reference, in laws and regulations, and use in private self-regulation, standardization, and the promotion of safe practices and methods. By making this document available for use and adoption by public authorities and private users, the NFPA does not waive any rights in copyright to this document.

Use of NFPA documents for regulatory purposes should be accomplished through adoption by reference. The term "adoption by reference" means the citing of title, edition, and publishing information only. Any deletions, additions, and changes desired by the adopting authority should be noted separately in the adopting instrument. In order to assist NFPA in following the uses made of its documents, adopting authorities are requested to notify the NFPA (Attention: Secretary, Standards Council) in writing of such use. For technical assistance and questions concerning adoption of NFPA documents, contact NFPA at the address below.

For Further Information

All questions or other communications relating to NFPA codes, standards, recommended practices, and guides and all requests for information on NFPA procedures governing its codes and standards development process, including information on the procedures for requesting Formal Interpretations, for proposing Tentative Interim Amendments, and for proposing revisions to NFPA documents during regular revision cycles, should be sent to NFPA headquarters, addressed to the attention of the Secretary, Standards Council, NFPA, 1 Batterymarch Park, P.O. Box 9101, Quincy, MA 02269-9101.

For more information about NFPA, visit the NFPA website at www.nfpa.org.

Copyright National Fire Protection Association
Provided by IHS under license with NFPA
No reproduction or networking permitted without license from IHS
Not for Resale

Copyright © 2006 National Fire Protection Association. All Rights Reserved.

NFPA 24

Standard for the

Installation of Private Fire Service Mains and Their Appurtenances

2007 Edition

This edition of NFPA 24, *Standard for the Installation of Private Fire Service Mains and Their Appurtenances*, was prepared by the Technical Committee on Private Water Supply Piping Systems, released by the Technical Correlating Committee on Automatic Sprinkler Systems, and acted on by NFPA at its June Association Technical Meeting held June 4–8, 2006, in Orlando, FL. It was issued by the Standards Council on July 28, 2006, with an effective date of August 17, 2006, and supersedes all previous editions.

This edition of NFPA 24 was approved as an American National Standard on August 17, 2006.

Origin and Development of NFPA 24

In 1903, the NFPA Committee on Hose and Hydrants first presented *Specifications for Mill Yard Hose Houses*, taken substantially from a standard published by the Eastern Factory Insurance Association. This text was revised and adopted in 1904. The NFPA Committee on Field Practice amended the Specifications in 1926, published as NFPA 25.

In 1925, the Committee on Field Practice prepared a *Standard on Outside Protection, Private Underground Piping Systems Supplying Water for Fire Extinguishment*, which was adopted by NFPA. It was largely taken from the 1920 edition of the NFPA *Automatic Sprinkler Standard*, Section M on Underground Pipes and Fittings. In September 1931, a revision was made, with the resulting standard designated as NFPA 24. In the 1981 edition the title was changed from *Standard for Outside Protection* to *Standard for the Installation of Private Fire Service Mains and Their Appurtenances*.

In 1953, on recommendation of the Committee on Standpipes and Outside Protection, the two standards (NFPA 24 and NFPA 25) were completely revised and adopted as NFPA 24. Amendments were made leading to separate editions in 1955, 1959, 1962, 1963, 1965, 1966, 1968, 1969, 1970, 1973, 1977, 1981, 1983, and 1987.

The 1992 edition included amendments to further delineate the point at which the water supply stops and the fixed fire protection system begins. Minor changes were made concerning special topics such as thrust restraint and equipment provisions in valve pits.

The 1995 edition clarified requirements for aboveground and buried piping. Revisions were made to provide additional information regarding listing requirements, signage, valves, valve supervision, hydrant outlets, system attachments, piping materials, and thrust blocks. User friendliness of the document was also addressed.

The 2002 edition represented a complete revision of NFPA 24. Changes included reorganization and editorial modifications to comply with the *Manual of Style for NFPA Technical Committee Documents*. Additionally, all of the underground piping requirements were relocated into a new Chapter 10.

The 2007 edition has been revised in five major areas: Chapter 10 has been editorially updated and contains minor technical changes. Additionally, Chapter 10 now contains newly established leakage test criteria, as well as updated requirements for thrust blocks and restrained joints. Two annexes are new to this edition: Annex C, *Recommended Practice for Fire Flow Testing*, and Annex D, *Recommended Practice for Marking of Hydrants*. These two annexes were developed based on the current edition of NFPA 291.

Copyright National Fire Protection Association
Provided by IHS under license with NFPA
No reproduction or networking permitted without license from IHS
Not for Resale

Technical Correlating Committee on Automatic Sprinkler Systems (AUT-AAC)

John G. O'Neill, *Chair*
The Protection Engineering Group, PC, VA [SE]

Christian Dubay, *Nonvoting Secretary*
National Fire Protection Association, MA

Jose R. Baz, International Engineered Systems Limited, Inc., FL [M]
Rep. NFPA Latin American Section
Kerry M. Bell, Underwriters Laboratories Inc., IL [RT]
Russell P. Fleming, National Fire Sprinkler Association, NY [M]
Scott T. Franson, The Viking Corporation, MI [M]
James B. Harmes, Grand Blanc Fire Department, MI [E]
Rep. International Association of Fire Chiefs
Luke Hilton, Liberty Mutual Property, NC [I]
Alex Hoffman, Viking Fire Protection Inc., Canada [IM]
Rep. Canadian Automatic Sprinkler Association
Roland J. Huggins, American Fire Sprinkler Association, Incorporated, TX [IM]
Sultan M. Javeri, SC Engineering, France [IM]
Andrew Kim, National Research Council of Canada, Canada [RT]
Donald C. Moeller, The RJA Group, Inc., CA [SE]
Joe W. Noble, Clark County Fire Department, NV [E]
Rep. International Fire Marshals Association
Eric Packard, Local 669 JATC Education Fund, MD [L]
Rep. United Association of Journeymen & Apprentices of the Plumbing & Pipe Fitting Industry of the U.S. & Canada
Chester W. Schirmer, Schirmer Engineering Corporation, NC [I]
Robert D. Spaulding, FM Global, MA [I]
Lynn K. Underwood, Axis U.S. Property, IL [I]

Alternates

Donald "Don" D. Becker, RJC & Associates, Inc., MO [IM]
(Alt. to R.J. Huggins)
Thomas C. Brown, The RJA Group, Inc., MD [SE]
(Alt. to D.C. Moeller)
George Capko, Jr., FM Global, MA [I]
(Alt. to R.D. Spaulding)
Kenneth E. Isman, National Fire Sprinkler Association, NY [M]
(Alt. to R.P. Fleming)
George E. Laverick, Underwriters Laboratories Inc., IL [RT]
(Alt. to K.M. Bell)
Garner A. Palenske, Schirmer Engineering Corporation, CA [I]
(Alt. to C.W. Schirmer)
Donato A. Pirro E., Electro Sistemas De Panama, S.A., Panama [M]
(Alt. to J.R. Baz)
J. Michael Thompson, The Protection Engineering Group, PC, VA [SE]
(Alt. to J.G. O'Neill)

Nonvoting

Antonio C. M. Braga, FM Global, CA [I]
Rep. TC on Hanging & Bracing of Water-Based Systems
Edward K. Budnick, Hughes Associates, Inc., MD [SE]
Rep. TC on Sprinkler System Discharge Criteria
Robert M. Gagnon, Gagnon Engineering, MD [SE]
Rep. TC on Foam-Water Sprinklers
William E. Koffel, Koffel Associates, Inc., MD [SE]
Rep. Safety to Life Correlating Committee
Kenneth W. Linder, GE Insurance Solutions, CT [I]
Rep. TC on Sprinkler System Installation Criteria
Daniel Madrzykowski, U.S. National Institute of Standards and Technology, MD [RT]
Rep. TC on Residential Sprinkler Systems
J. William Sheppard, General Motors Corporation, MI [U]
Rep. TC on Private Water Supply Piping Systems
John J. Walsh, UA Joint Apprenticeship Committee, MD [SE]
(Member Emeritus)

Christian Dubay, NFPA Staff Liaison

This list represents the membership at the time the Committee was balloted on the final text of this edition. Since that time, changes in the membership may have occurred. A key to classifications is found at the back of the document.

NOTE: Membership on a committee shall not in and of itself constitute an endorsement of the Association or any document developed by the committee on which the member serves.

Committee Scope: This Committee shall have overall responsibility for documents that pertain to the criteria for the design and installation of automatic, open and foam-water sprinkler systems including the character and adequacy of water supplies, and the selection of sprinklers, piping, valves, and all materials and accessories. This Committee does not cover the installation of tanks and towers, nor the installation, maintenance, and use of central station, proprietary, auxiliary, and local signaling systems for watchmen, fire alarm, supervisory service, nor the design of fire department hose connections.

Copyright National Fire Protection Association
Provided by IHS under license with NFPA
No reproduction or networking permitted without license from IHS
Not for Resale

Technical Committee on Private Water Supply Piping Systems (AUT-PRI)

J. William Sheppard, *Chair*
General Motors Corporation, MI [U]
Rep. NFPA Industrial Fire Protection Section

James B. Biggins, Marsh Risk Consulting, IL [I]
Richard W. Bonds, Ductile Iron Pipe Research Association, AL [M]
Phillip A. Brown, American Fire Sprinkler Association, Incorporated, TX [IM]
Richard R. Brown, Brown Sprinkler Corporation, KY [IM]
Rep. National Fire Sprinkler Association
Stephen A. Clark, Jr., Allianz Risk Consultants, GA [I]
Brandon W. Frakes, GE Insurance Solutions, NC [I]
Robert M. Gagnon, Gagnon Engineering, MD [SE]
Luke Hilton, Liberty Mutual Property, NC [I]
Rep. Property Casualty Insurers Association of America
Gerald Kelliher, Westinghouse Savannah River Co., SC [U]
Kevin J. Kelly, National Fire Sprinkler Association, NY [M]
Marshall A. Klein, Marshall A. Klein & Associates, Incorporated, MD [SE]
Alan R. Laguna, Merit Sprinkler Company, Incorporated, LA [IM]
John Lake, Marion County Fire Rescue, FL [E]
George E. Laverick, Underwriters Laboratories Incorporated, IL [RT]
James M. Maddry, James M. Maddry, P.E., GA [SE]
Kevin D. Maughan, Tyco Fire & Building Products, RI [M]
David S. Mowrer, HSB Professional Loss Control, TN [I]
Robert A. Panero, Pacific Gas and Electric Company, CA [U]
Rep. Edison Electric Institute
Darrin A. Parsons, Road Sprinkler Fitters Local Union 669, MD [L]
Rep. United Association of Journeymen & Apprentices of the Plumbing & Pipe Fitting Industry of the U.S. & Canada
Sam (Sat) Salwan, Environmental Systems Design, Incorporated, IL [SE]
James R. Schifiliti, Fire Safety Consultants, Incorporated, IL [IM]
Rep. Illinois Fire Prevention Association
James W. Simms, The RJA Group, Incorporated, CA [SE]

Alternates

Mark A. Bowman, GE Insurance Solutions, OH [I]
(Alt. to B.W. Frakes)
James K. Clancy, The RJA Group, Incorporated, CA [SE]
(Alt. to J.W. Simms)
David M. Hammerman, Marshall A. Klein and Associates, Incorporated, MD [SE]
(Alt. to M.A. Klein)
Charles F. Hill, Ryan Fire Protection, Incorporated, IN [M]
(Alt. to K.J. Kelly)
Peter T. Schwab, Wayne Automatic Fire Sprinklers, Incorporated, FL [IM]
(Alt. to R.R. Brown)
Blake M. Shugarman, Underwriters Laboratories Incorporated, IL [RT]
(Alt. to G.E. Laverick)
Lawrence Thibodeau, Hampshire Fire Protection Company Incorporated, NH [IM]
(Alt. to P.A. Brown)

Christian Dubay, NFPA Staff Liaison

This list represents the membership at the time the Committee was balloted on the final text of this edition. Since that time, changes in the membership may have occurred. A key to classifications is found at the back of the document.

NOTE: Membership on a committee shall not in and of itself constitute an endorsement of the Association or any document developed by the committee on which the member serves.

Committee Scope: This Committee shall have primary responsibility for documents on private piping systems supplying water for fire protection and for hydrants, hose houses, and valves. The Committee is also responsible for documents on fire flow testing and marking of hydrants.

Copyright National Fire Protection Association
Provided by IHS under license with NFPA
No reproduction or networking permitted without license from IHS
Not for Resale

Contents

Chapter 1 Administration **24**– 5
1.1 Scope **24**– 5
1.2 Purpose **24**– 5
1.3 Retroactivity **24**– 5
1.4 Equivalency **24**– 5
1.5 Units **24**– 5

Chapter 2 Referenced Publications **24**– 6
2.1 General **24**– 6
2.2 NFPA Publications **24**– 6
2.3 Other Publications **24**– 6
2.4 References for Extracts in Mandatory Sections **24**– 7

Chapter 3 Definitions **24**– 7
3.1 General **24**– 7
3.2 NFPA Official Definitions **24**– 7
3.3 General Definitions **24**– 7
3.4 Hydrant Definitions **24**– 8

Chapter 4 General Requirements **24**– 8
4.1 Plans **24**– 8
4.2 Installation Work **24**– 8

Chapter 5 Water Supplies **24**– 8
5.1 Connection to Waterworks Systems **24**– 8
5.2 Size of Fire Mains **24**– 8
5.3 Pressure-Regulating Devices and Meters **24**– 9
5.4 Connection from Waterworks Systems **24**– 9
5.5 Connections to Public Water Systems **24**– 9
5.6 Pumps **24**– 9
5.7 Tanks **24**– 9
5.8 Penstocks, Flumes, Rivers, Lakes, or Reservoirs **24**– 9
5.9 Fire Department Connections **24**– 9

Chapter 6 Valves **24**– 9
6.1 Types of Valves **24**– 9
6.2 Valves Controlling Water Supplies **24**–10
6.3 Post Indicator Valves **24**–10
6.4 Valves in Pits **24**–10
6.5 Sectional Valves **24**–10
6.6 Identifying and Securing Valves **24**–10
6.7 Check Valves **24**–11

Chapter 7 Hydrants **24**–11
7.1 General **24**–11
7.2 Number and Location **24**–11
7.3 Installation. **24**–11

Chapter 8 Hose Houses and Equipment **24**–11
8.1 General **24**–11
8.2 Location **24**–11
8.3 Construction **24**–12
8.4 Size and Arrangement **24**–12
8.5 Marking **24**–12
8.6 General Equipment **24**–12
8.7 Domestic Service Use Prohibited **24**–12

Chapter 9 Master Streams **24**–12
9.1 Master Streams **24**–12
9.2 Application and Special Considerations **24**–12

Chapter 10 Underground Piping **24**–12
10.1 Piping Materials **24**–12
10.2 Fittings **24**–13
10.3 Joining of Pipe and Fittings **24**–13
10.4 Depth of Cover **24**–14
10.5 Protection Against Freezing **24**–14
10.6 Protection Against Damage **24**–14
10.7 Requirement for Laying Pipe **24**–14
10.8 Joint Restraint **24**–14
10.9 Backfilling **24**–16
10.10 Testing and Acceptance **24**–16

Chapter 11 Hydraulic Calculations **24**–19
11.1 Calculations in English Units **24**–19
11.2 Calculations in SI Units **24**–19

Chapter 12 Aboveground Pipe and Fittings **24**–20
12.1 General **24**–20
12.2 Protection of Piping **24**–20

Chapter 13 Sizes of Aboveground and Buried Pipe **24**–20
13.1 Private Service Mains **24**–20
13.2 Mains Not Supplying Hydrants **24**–20
13.3 Mains Supplying Fire Protection Systems **24**–20

Chapter 14 System Inspection, Testing, and Maintenance **24**–20
14.1 General **24**–20

Annex A Explanatory Material **24**–20

Annex B Valve Supervision Issues **24**–34

Annex C Recommended Practice for Fire Flow Testing **24**–35

Annex D Recommended Practice for Marking of Hydrants **24**–44

Annex E Informational References **24**–46

Index **24**–47

Copyright National Fire Protection Association
Provided by IHS under license with NFPA
No reproduction or networking permitted without license from IHS
Not for Resale

NFPA 24

Standard for the

Installation of Private Fire Service Mains and Their Appurtenances

2007 Edition

IMPORTANT NOTE: This NFPA document is made available for use subject to important notices and legal disclaimers. These notices and disclaimers appear in all publications containing this document and may be found under the heading "Important Notices and Disclaimers Concerning NFPA Documents." They can also be obtained on request from NFPA or viewed at www.nfpa.org/disclaimers.

NOTICE: An asterisk (*) following the number or letter designating a paragraph indicates that explanatory material on the paragraph can be found in Annex A.

Changes other than editorial are indicated by a vertical rule beside the paragraph, table, or figure in which the change occurred. These rules are included as an aid to the user in identifying changes from the previous edition. Where one or more complete paragraphs have been deleted, the deletion is indicated by a bullet (•) between the paragraphs that remain.

A reference in brackets [ ] following a section or paragraph indicates material that has been extracted from another NFPA document. As an aid to the user, the complete title and edition of the source documents for extracts in mandatory sections of the document are given in Chapter 2 and those for extracts in informational sections are given in Annex E. Editorial changes to extracted material consist of revising references to an appropriate division in this document or the inclusion of the document number with the division number when the reference is to the original document. Requests for interpretations or revisions of extracted text shall be sent to the technical committee responsible for the source document.

Information on referenced publications can be found in Chapter 2 and Annex E.

Chapter 1 Administration

1.1 Scope.

1.1.1 This standard shall cover the minimum requirements for the installation of private fire service mains and their appurtenances supplying the following:

(1) Automatic sprinkler systems
(2) Open sprinkler systems
(3) Water spray fixed systems
(4) Foam systems
(5) Private hydrants
(6) Monitor nozzles or standpipe systems with reference to water supplies
• (7) Hose houses

1.1.2 This standard shall apply to combined service mains used to carry water for fire service and other uses.

1.2 Purpose. The purpose of this standard shall be to provide a reasonable degree of protection for life and property from fire through installation requirements for private fire service main systems based on sound engineering principles, test data, and field experience.

1.3 Retroactivity. The provisions of this standard reflect a consensus of what is necessary to provide an acceptable degree of protection from the hazards addressed in this standard at the time the standard was issued.

1.3.1 Unless otherwise specified, the provisions of this standard shall not apply to facilities, equipment, structures, or installations that existed or were approved for construction or installation prior to the effective date of the standard. Where specified, the provisions of this standard shall be retroactive.

1.3.2 In those cases where the authority having jurisdiction determines that the existing situation presents an unacceptable degree of risk, the authority having jurisdiction shall be permitted to apply retroactively any portions of this standard deemed appropriate.

1.3.3 The retroactive requirements of this standard shall be permitted to be modified if their application clearly would be impractical in the judgment of the authority having jurisdiction and only where it is clearly evident that a reasonable degree of safety is provided.

1.4 Equivalency. Nothing in this standard is intended to prevent the use of systems, methods, or devices of equivalent or superior quality, strength, fire resistance, effectiveness, durability, and safety over those prescribed by this standard. Technical documentation shall be submitted to the authority having jurisdiction to demonstrate equivalency. The system, method, or device shall be approved for the intended purpose by the authority having jurisdiction.

1.5 Units.

1.5.1 Metric units of measurement in this standard shall be in accordance with the modernized metric system known as the International System of Units (SI). Liter and bar units are not part of, but are recognized by, SI and are commonly used in international fire protection. These units are shown in Table 1.5.1 with conversion factors.

Table 1.5.1 Conversion Table for SI Units

Name of Unit	Unit Symbol	Conversion Factor
Liter	L	1 gal = 3.785 L
Liter per minute per square meter	$(L/min)/m^2$	1 gpm/ft^2 = (40.746 $L/min)/m^2$
Cubic decimeter	dm^3	1 gal = 3.785 dm^3
Pascal	Pa	1 psi = 6894.757 Pa
Bar	bar	1 psi = 0.0689 bar
Bar	bar	1 bar = 10^5 Pa

Note: For additional conversions and information, see IEEE/ASTM-SI-10.

1.5.2 If a value for measurement as given in this standard is followed by an equivalent value in other units, the first stated is to be regarded as the requirement. A given equivalent value might be approximate.

1.5.3 SI units have been converted by multiplying the quantity by the conversion factor and then rounding the result to the appropriate number of significant digits.

Copyright National Fire Protection Association
Provided by IHS under license with NFPA
No reproduction or networking permitted without license from IHS
Not for Resale

Chapter 2 Referenced Publications

2.1 General. The documents or portions thereof listed in this chapter are referenced within this standard and shall be considered part of the requirements of this document.

2.2 NFPA Publications. National Fire Protection Association, 1 Batterymarch Park, Quincy, MA 02169-7471.

NFPA 13, *Standard for the Installation of Sprinkler Systems,* 2007 edition.

NFPA 20, *Standard for the Installation of Stationary Pumps for Fire Protection,* 2007 edition.

NFPA 22, *Standard for Water Tanks for Private Fire Protection,* 2003 edition.

NFPA 25, *Standard for the Inspection, Testing, and Maintenance of Water-Based Fire Protection Systems,* 2002 edition.

NFPA 1961, *Standard on Fire Hose,* 2002 edition.

NFPA 1963, *Standard for Fire Hose Connections,* 2003 edition.

2.3 Other Publications.

2.3.1 ASME Publications. American Society of Mechanical Engineers, Three Park Avenue, New York, NY 10016-5990.

ASME B1.20.1, *Pipe Threads, General Purpose (Inch)*, 1983.

ASME B16.1, *Cast Iron Pipe Flanges and Flanged Fittings*, 1989.

ASME B16.3, *Malleable Iron Threaded Fittings, Class 150 and 300*, 1992.

ASME B16.4, *Cast Iron Threaded Fittings, Class 125 and 250*, 1992.

ASME B16.5, *Steel Pipe Flanges and Flanged Fittings*, 1996.

ASME B16.9, *Factory-Made Wrought Steel Buttweld Fittings*, 1993.

ASME B16.11, *Forged Steel Fittings, Socket Welded and Threaded*, 1996.

ASME B16.18, *Cast Bronze Solder Joint Pressure Fittings*, 1984.

ASME B16.22, *Wrought Copper and Bronze Solder Joint Pressure Fittings*, 1995.

ASME B16.25, *Buttwelding Ends for Pipe, Valves, Flanges, and Fittings*, 1997.

2.3.2 ASTM Publications. ASTM International, 100 Barr Harbor Drive, P.O. Box C700, West Conshohocken, PA 19428-2959.

ASTM A 234, *Specification for Piping Fittings of Wrought Carbon Steel and Alloy Steel for Moderate and Elevated Temperatures*, 1995.

ASTM B 75, *Specification for Seamless Copper Tube*, 1999.

ASTM B 88, *Specification for Seamless Copper Water Tube*, 1999.

ASTM B 251, *Requirements for Wrought Seamless Copper and Copper-Alloy Tube*, 1999.

ASTM F 437, *Chlorinated Polyvinyl Chloride (CPVC) Specification for Schedule 80 CPVC Threaded Fittings*, 1995.

ASTM F 438, *Specification for Schedule 40 CPVC Socket-Type Fittings*, 1993.

ASTM F 439, *Specification for Schedule 80 CPVC Socket-Type Fittings*, 1993.

IEEE/ASTM-SI-10, *Standard for Use of the International System of Units (SI): The Modern Metric System*, 1997.

2.3.3 AWWA Publications. American Water Works Association, 6666 West Quincy Avenue, Denver, CO 80235.

AWWA C104, *Cement Mortar Lining for Ductile Iron Pipe and Fittings for Water*, 2003.

AWWA C105, *Polyethylene Encasement for Ductile Iron Pipe Systems*, 1999.

AWWA C110, *Ductile Iron and Gray Iron Fittings*, 2003.

AWWA C111, *Rubber-Gasket Joints for Ductile Iron Pressure Pipe and Fittings*, 2000.

AWWA C115, *Flanged Ductile Iron Pipe with Ductile Iron or Gray Iron Threaded Flanges*, 1999.

AWWA C116, *Protective Fusion-Bonded Epoxy Coatings for the Interior and Exterior Surfaces of Ductile-Iron and Gray-Iron Fittings for Water Supply Service*, 2003.

AWWA C150, *Thickness Design of Ductile Iron Pipe*, 2002.

AWWA C151, *Ductile Iron Pipe, Centrifugally Cast for Water*, 2002.

AWWA C153, *Ductile-Iron Compact Fittings for Water Service*, 2000.

AWWA C200, *Steel Water Pipe 6 in. and Larger*, 1991.

AWWA C203, *Coal-Tar Protective Coatings and Linings for Steel Water Pipelines Enamel and Tape — Hot Applied*, 1991.

AWWA C205, *Cement-Mortar Protective Lining and Coating for Steel Water Pipe 4 in. and Larger — Shop Applied*, 1989.

AWWA C206, *Field Welding of Steel Water Pipe*, 1991.

AWWA C207, *Steel Pipe Flanges for Waterworks Service — Sizes 4 in. Through 144 in.*, 1986.

AWWA C208, *Dimensions for Fabricated Steel Water Pipe Fittings*, 1983.

AWWA C300, *Reinforced Concrete Pressure Pipe, Steel-Cylinder Type, for Water and Other Liquids*, 1989.

AWWA C301, *Prestressed Concrete Pressure Pipe, Steel-Cylinder Type, for Water and Other Liquids*, 1992.

AWWA C302, *Reinforced Concrete Pressure Pipe, Non-Cylinder Type, for Water and Other Liquids*, 1987.

AWWA C303, *Reinforced Concrete Pressure Pipe, Steel-Cylinder Type, Pretensioned, for Water and Other Liquids*, 1987.

AWWA C400, *Standard for Asbestos-Cement Distribution Pipe, 4 in. Through 16 in., for Water and Other Liquids*, 1993.

AWWA C401, *Standard Practice for the Selection of Asbestos-Cement Water Pipe*, 1993.

AWWA C600, *Installation of Ductile Iron Water Mains and Their Appurtenances*, 1999.

AWWA C602, *Cement-Mortar Lining of Water Pipe Lines 4 in. and Larger — in Place*, 1989.

AWWA C603, *Standard for the Installation of Asbestos-Cement Water Pipe*, 1990.

AWWA C900, *Polyvinyl Chloride (PVC) Pressure Pipe, 4 in. Through 12 in., for Water and Other Liquids*, 1989.

AWWA C906, *Polyethylene (PE) Pressure Pipe and Fittings, 4 in. (100 mm) Through 63 in. (1575 mm) for Water Distribution and Transport*, 1999.

AWWA M11, *A Guide for Steel Pipe Design and Installation*, 3rd edition, 1989.

Copyright National Fire Protection Association
Provided by IHS under license with NFPA
No reproduction or networking permitted without license from IHS
Not for Resale

2.3.4 Other Publications.

Merriam-Webster's Collegiate Dictionary, 11th edition, Merriam-Webster, Inc., Springfield, MA, 2003.

2.4 References for Extracts in Mandatory Sections.

NFPA 13, *Standard for the Installation of Sprinkler Systems*, 2007 edition.

Chapter 3 Definitions

3.1 General. The definitions contained in this chapter shall apply to the terms used in this standard. Where terms are not defined in this chapter or within another chapter, they shall be defined using their ordinarily accepted meanings within the context in which they are used. *Merriam-Webster's Collegiate Dictionary*, 11th edition, shall be the source for the ordinarily accepted meaning.

3.2 NFPA Official Definitions.

3.2.1* Approved. Acceptable to the authority having jurisdiction.

3.2.2* Authority Having Jurisdiction (AHJ). An organization, office, or individual responsible for enforcing the requirements of a code or standard, or for approving equipment, materials, an installation, or a procedure.

3.2.3 Labeled. Equipment or materials to which has been attached a label, symbol, or other identifying mark of an organization that is acceptable to the authority having jurisdiction and concerned with product evaluation, that maintains periodic inspection of production of labeled equipment or materials, and by whose labeling the manufacturer indicates compliance with appropriate standards or performance in a specified manner.

3.2.4* Listed. Equipment, materials, or services included in a list published by an organization that is acceptable to the authority having jurisdiction and concerned with evaluation of products or services, that maintains periodic inspection of production of listed equipment or materials or periodic evaluation of services, and whose listing states that either the equipment, material, or service meets appropriate designated standards or has been tested and found suitable for a specified purpose.

3.2.5 Shall. Indicates a mandatory requirement.

3.2.6 Should. Indicates a recommendation or that which is advised but not required.

3.2.7 Standard. A document, the main text of which contains only mandatory provisions using the word "shall" to indicate requirements and which is in a form generally suitable for mandatory reference by another standard or code or for adoption into law. Nonmandatory provisions shall be located in an appendix or annex, footnote, or fine-print note and are not to be considered a part of the requirements of a standard.

3.3 General Definitions.

3.3.1 Appurtenance. An accessory or attachment that enables the private fire service main to perform its intended function.

3.3.2 Corrosion Resistant Piping. Piping that has the property of being able to withstand deterioration of its surface or its properties when exposed to its environment.

3.3.3 Corrosion Retardant Material. A lining or coating material that when applied to piping or appurtenances has the property of reducing or slowing the deterioration of the object's surface or properties when exposed to its environment.

3.3.4 Fire Department Connection. A connection through which the fire department can pump supplemental water into the sprinkler system, standpipe, or other system, furnishing water for fire extinguishment to supplement existing water supplies.

3.3.5 Fire Pump. A pump supplying water at the flow and pressure required by water-based fire protection systems.

3.3.6 Hose House. An enclosure located over or adjacent to a hydrant or other water supply designed to contain the necessary hose nozzles, hose wrenches, gaskets, and spanners to be used in fire fighting in conjunction with and to provide aid to the local fire department.

3.3.7 Hydrant Butt. The hose connection outlet of a hydrant.

3.3.8 Hydraulically Calculated Water Demand Flow Rate. The water flow rate for a system or hose stream that has been calculated using accepted engineering practices.

3.3.9 Pressure.

3.3.9.1 ***Residual Pressure.*** The pressure that exists in the distribution system, measured at the residual hydrant at the time the flow readings are taken at the flow hydrants.

3.3.9.2 ***Static Pressure.*** The pressure that exists at a given point under normal distribution system conditions measured at the residual hydrant with no hydrants flowing.

3.3.10 Pressure Regulating Device. A device designed for the purpose of reducing, regulating, controlling, or restricting water pressure. Examples include pressure-reducing valves, pressure-control valves, and pressure-restricting devices.

3.3.11* Private Fire Service Main. Private fire service main, as used in this standard, is that pipe and its appurtenances on private property (1) between a source of water and the base of the system riser for water-based fire protection systems, (2) between a source of water and inlets to foam-making systems, (3) between a source of water and the base elbow of private hydrants or monitor nozzles, and (4) used as fire pump suction and discharge piping, (5) beginning at the inlet side of the check valve on a gravity or pressure tank. [**13:**3.8]

3.3.12 Pumper Outlet. The hydrant outlet intended for use by fire departments for taking supply from the hydrant for pumpers.

3.3.13 Rated Capacity. The flow available from a hydrant at the designated residual pressure (rated pressure) either measured or calculated.

3.3.14 Test.

3.3.14.1 ***Flow Test.*** A test performed by the flow and measurement of water from one hydrant and the static and residual pressures from an adjacent hydrant for the purpose of determining the available water supply at that location.

3.3.14.2 ***Flushing Test.*** A test of a piping system using high velocity flows to remove debris from the piping system prior to it being placed in service.

3.3.14.3 ***Hydrostatic Test.*** A test of a closed piping system and its attached appurtenances consisting of subjecting the piping to an increased internal pressure for a specified period of duration to verify system integrity and leak rates.

Copyright National Fire Protection Association
Provided by IHS under license with NFPA
No reproduction or networking permitted without license from IHS
Not for Resale

3.3.15 Valve.

3.3.15.1 ***Check Valve.*** A valve that allows flow in one direction only.

3.3.15.2 ***Indicating Valve.*** A valve that has components that show if the valve is open or closed. Examples are outside screw and yoke (OS&Y) gate valves and underground gate valves with indicator posts.

3.4 Hydrant Definitions.

3.4.1 Hydrant. An exterior valved connection to a water supply system that provides hose connections.

3.4.1.1 ***Dry Barrel Hydrant.*** This is the most common type of hydrant; it has a control valve below the frost line between the footpiece and the barrel. A drain is located at the bottom of the barrel above the control valve seat for proper drainage after operation.

3.4.1.2 ***Flow Hydrant.*** The hydrant that is used for the flow and flow measurement of water during a flow test.

3.4.1.3 ***Private Fire Hydrant.*** A valved connection on a water supply system having one or more outlets and that is used to supply hose and fire department pumpers with water on private property. Where connected to a public water system, the private hydrants are supplied by a private service main that begins at the point of service designated by the AHJ, usually at a manually operated valve near the property line.

3.4.1.4 ***Public Hydrant.*** A valved connection on a water supply system having one or more outlets and that is used to supply hose and fire department pumpers with water.

3.4.1.5 ***Residual Hydrant.*** The hydrant that is used for measuring static and residual pressures during a flow test.

3.4.1.6 ***Wet Barrel Hydrant.*** A type of hydrant that sometimes is used where there is no danger of freezing weather. Each outlet on a wet barrel hydrant is provided with a valved outlet threaded for fire hose.

Chapter 4 General Requirements

4.1* Plans.

4.1.1 Working plans shall be submitted for approval to the authority having jurisdiction before any equipment is installed or remodeled.

4.1.2 Deviation from approved plans shall require permission of the authority having jurisdiction.

4.1.3 Working plans shall be drawn to an indicated scale on sheets of uniform size, with a plan of each floor as applicable, and shall include the following items that pertain to the design of the system:

(1) Name of owner
(2) Location, including street address
(3) Point of compass
(4) A graphic representation of the scale used on all plans
(5) Name and address of contractor
(6) Size and location of all water supplies
(7) Size and location of standpipe risers, hose outlets, hand hose, monitor nozzles, and related equipment
(8) The following items that pertain to private fire service mains:
  (a) Size
  (b) Length
  (c) Location
  (d) Weight
  (e) Material
  (f) Point of connection to city main
  (g) Sizes, types, and locations of valves, valve indicators, regulators, meters, and valve pits
  (h) Depth at which the top of the pipe is laid below grade
  (i) Method of restraint
(9) The following items that pertain to hydrants:
  (a) Size and location, including size and number of outlets and whether outlets are to be equipped with independent gate valves
  (b) Whether hose houses and equipment are to be provided, and by whom
  (c) Static and residual hydrants used in flow
  (d) Method of restraint
(10) Size, location, and piping arrangement of fire department connections

4.1.4 The working plan submittal shall include the manufacturer's installation instructions for any specially listed equipment, including descriptions, applications, and limitations for any devices, piping, or fittings.

4.2 Installation Work.

4.2.1 Installation work shall be performed by fully experienced and responsible persons.

4.2.2 The authority having jurisdiction shall always be consulted before the installation or remodeling of private fire service mains.

Chapter 5 Water Supplies

5.1* Connection to Waterworks Systems.

5.1.1 A connection to a reliable waterworks system shall be an acceptable water supply source.

5.1.2 The volume and pressure of a public water supply shall be determined from waterflow test data.

5.1.3 An adjustment to the waterflow test data to account for the following shall be made, as appropriate:

(1) Daily and seasonal fluctuations
(2) Possible interruption by flood or ice conditions
(3) Large simultaneous industrial use
(4) Future demand on the water supply system
(5) Other conditions that could affect the water supply

5.2 Size of Fire Mains.

5.2.1 Private Fire Service Mains. Pipe smaller than 6 in. (152.4 mm) in diameter shall not be installed as a private service main suppling hydrants.

5.2.2 Mains Not Supplying Hydrants. For mains that do not supply hydrants, sizes smaller than 6 in. (152.4 mm) shall be permitted to be used subject to the following restrictions:

(1) The main shall supply only the following types of systems:
  (a) Automatic sprinkler systems
  (b) Open sprinkler systems
  (c) Water spray fixed systems

--`,,```,,,,````-`-`,,`,,`,`,,`---
Copyright National Fire Protection Association
Provided by IHS under license with NFPA
No reproduction or networking permitted without license from IHS
Not for Resale

(d) Foam systems
(e) Class II standpipe systems

(2) Hydraulic calculations shall show that the main is able to supply the total demand at the appropriate pressure.
(3) Systems that are not hydraulically calculated shall have a main at least as large as the riser.

5.3 Pressure-Regulating Devices and Meters.

5.3.1 No pressure-regulating valve shall be used in the water supply, except by special permission of the authority having jurisdiction.

5.3.2 Where meters are required by other authorities, they shall be listed.

5.4* Connection from Waterworks Systems.

5.4.1 The requirements of the public health authority having jurisdiction shall be determined and followed.

5.4.2 Where equipment is installed to guard against possible contamination of the public water system, such equipment and devices shall be listed for fire protection service.

5.5 Connections to Public Water Systems. Connections to public water systems shall be controlled by post indicator valves of an approved type and installed in accordance with the requirements of Section 6.3.

5.6* Pumps. A single, automatically controlled fire pump installed in accordance with NFPA 20, shall be an acceptable water supply source.

5.7 Tanks. Tanks shall be installed in accordance with NFPA 22.

5.8 Penstocks, Flumes, Rivers, Lakes, or Reservoirs. Water supply connections from penstocks, flumes, rivers, lakes, or reservoirs shall be arranged to avoid mud and sediment and shall be provided with approved, double, removable screens or approved strainers installed in an approved manner.

5.9* Fire Department Connections.

5.9.1 General. A fire department connection shall be provided as described in Section 5.9.

5.9.1.1 Fire department connections shall not be required where approved by the authority having jurisdiction.

5.9.1.2 Fire department connections shall be properly supported.

5.9.1.3 Fire department connections shall be of an approved type.

5.9.1.4 Fire department connections shall be equipped with listed plugs or caps that are secured and arranged for easy removal by fire departments.

5.9.2 Couplings.

5.9.2.1 The fire department connection(s) shall use an NH internal threaded swivel fitting(s) with an NH standard thread(s).

5.9.2.2 At least one of the connections shall be the 2.5-7.5 NH standard thread specified in NFPA 1963.

5.9.2.3 Where local fire department connections do not conform to NFPA 1963, the authority having jurisdiction shall designate the connection to be used.

5.9.2.4 The use of threadless couplings shall be permitted where required by the authority having jurisdiction and where listed for such use.

5.9.3 Valves.

5.9.3.1 A listed check valve shall be installed in each fire department connection.

5.9.3.2 No shutoff valve shall be permitted in the fire department connection piping.

5.9.4 Drainage.

5.9.4.1 The pipe between the check valve and the outside hose coupling shall be equipped with an approved automatic drip.

5.9.4.2 An automatic drip shall not be required in areas not subject to freezing.

5.9.5 Location and Signage.

5.9.5.1 Fire department connections shall be located on the street side of buildings.

5.9.5.2 Fire department connections shall be located and arranged so that hose lines can be readily and conveniently attached to the inlets without interference from any nearby objects, including buildings, fences, posts, or other fire department connections.

5.9.5.3 Each fire department connection to sprinkler systems shall be designated by a sign as follows:

(1) The sign shall have raised or engraved letters at least 1 in. (25.4 mm) in height on a plate or fitting.
(2) The sign shall indicate the service for which the connection is intended and shall read, for example, as follows:

AUTOSPKR
OPEN SPKR
AND STANDPIPE

5.9.5.4 Where the system demand pressure exceeds 150 psi (10.3 bar), the sign required by 5.9.5.3 shall indicate the required design pressure.

5.9.5.5 Where a fire department connection only supplies a portion(s) of the building, a sign shall be attached to indicate the portion(s) of the building supplied.

Chapter 6 Valves

6.1 Types of Valves.

6.1.1 All valves controlling connections to water supplies and to supply pipes to sprinklers shall be listed indicating valves.

6.1.2 Indicating valves shall not close in less than 5 seconds when operated at maximum possible speed from the fully open position.

6.1.3 A listed underground gate valve equipped with a listed indicator post shall be permitted.

6.1.4 A listed water control valve assembly with a reliable position indication connected to a remote supervisory station shall be permitted.

6.1.5 A nonindicating valve, such as an underground gate valve with approved roadway box, complete with T-wrench, and accepted by the authority having jurisdiction, shall be permitted.

Copyright National Fire Protection Association
Provided by IHS under license with NFPA
No reproduction or networking permitted without license from IHS
Not for Resale

6.2 Valves Controlling Water Supplies.

6.2.1 At least one listed indicating valve shall be installed in each source of water supply.

6.2.2 No shutoff valve shall be permitted in the fire department connection.

6.2.3 Where more than one source of water supply exists, a check valve shall be installed in each connection.

6.2.4 Where cushion tanks are used with automatic fire pumps, a check valve shall not be required in the cushion tank connection.

6.2.5* In a connection serving as one source of supply, listed indicating valves or post indicator valves shall be installed on both sides of all check valves required in 6.2.3.

6.2.6 In the discharge pipe from a pressure tank or a gravity tank of less than 15,000 gal (56.78 m^3) capacity, a control valve shall not be required to be installed on the tank side of the check valve.

6.2.7* The following requirements shall apply where a gravity tank is located on a tower in the yard:

(1) The control valve on the tank side of the check valve shall be an outside screw and yoke or a listed indicating valve.
(2) The other control valve shall be either an outside screw and yoke, a listed indicating valve, or a listed valve having a post-type indicator.

6.2.8* The following requirements shall apply where a gravity tank is located on a building:

(1) Both control valves shall be outside screw and yoke or listed indicating valves.
(2) All fittings inside the building, except the drain tee and heater connections, shall be under the control of a listed valve.

6.2.9 One of the following requirements shall be met where a pump is located in a combustible pump house or exposed to danger from fire or falling walls, or where a tank discharges into a private fire service main fed by another supply:

(1)*The check valve in the connection shall be located in a pit.
(2) The control valve shall be of the post indicator type and located a safe distance outside buildings.

6.2.10* All control valves shall be located where readily accessible and free of obstructions.

6.3 Post Indicator Valves.

6.3.1* General. Unless the requirements of 6.3.2 are met, every connection from the private fire service main to a building shall be provided with a listed post indicator valve located to control all sources of water supply.

6.3.2 Alternate Provision for Post Indicator Valves. The authority having jurisdiction shall be permitted to waive the requirement for the post indicator valves required in 6.3.1 where the provisions of Sections 6.1 and 6.4 are met.

6.3.3 Location.

6.3.3.1 Post indicator valves shall be located not less than 40 ft (12.2 m) from buildings.

6.3.3.2* Where post indicator valves cannot be located in accordance with 6.3.3.1, they shall be permitted to be located closer where approved by the authority having jurisdiction, or wall post indicator valves shall be used, provided they are set in locations near blank walls where the possibility of injury by falling walls is unlikely and from which people are not likely to be driven by smoke or heat.

6.3.4 Arrangement.

6.3.4.1 Post indicator valves shall be set so that the top of the post is 36 in. (0.9 m) above the final grade.

6.3.4.2 Post indicator valves shall be protected against mechanical damage where needed.

6.4 Valves in Pits.

6.4.1 Where it is impractical to provide a post indicator valve, valves shall be permitted to be placed in pits and shall be approved by the authority having jurisdiction.

6.4.2 Valve pits located at or near the base of the riser of an elevated tank shall be designed in accordance with Chapter 9 of NFPA 22.

6.4.3* Where used, valve pits shall be of adequate size and readily accessible for inspection, operation, testing, maintenance, and removal of equipment contained therein.

6.4.4 Valve pits shall be constructed and arranged to properly protect the installed equipment from movement of earth, freezing, and accumulation of water.

6.4.4.1 Depending on soil conditions and the size of the pit, valve pits shall be permitted to be constructed of any of the following materials:

(1) Poured-in-place or precast concrete, with or without reinforcement
(2) Brick
(3) Other approved materials

6.4.4.2 Where the water table is low and the soil is porous, crushed stone or gravel shall be permitted to be used for the floor of the pit.

6.4.5 The location of the valve shall be marked, and the cover of the pit shall be kept free of obstructions.

6.5 Sectional Valves.

6.5.1 Large, private, fire service main systems shall have sectional controlling valves at appropriate points to permit sectionalizing the system in the event of a break or to make repairs or extensions.

6.5.2 A sectional valve shall be provided at the following locations:

(1) On each bank where a main crosses water
(2) Outside the building foundation(s) where a main or a section of a main runs under a building

6.6 Identifying and Securing Valves.

6.6.1 Identification signs shall be provided at each valve to indicate its function and what it controls.

6.6.2* Valves on connections to water supplies, sectional control and isolation valves, and other valves in supply pipes to sprinklers and other fixed water-based fire suppression systems shall be supervised by one of the following methods:

(1) Central station, proprietary, or remote station signaling service
(2) Local signaling service that causes the sounding of an audible signal at a constantly attended location

Copyright National Fire Protection Association
Provided by IHS under license with NFPA
No reproduction or networking permitted without license from IHS
Not for Resale

(3) An approved procedure to ensure that valves are locked in the correct position
(4) An approved procedure to ensure that valves are located within fenced enclosures under the control of the owner, sealed in the open position, and inspected weekly

6.6.3 Supervision of underground gate valves with roadway boxes shall not be required.

6.7 Check Valves. Check valves shall be installed in a vertical or horizontal position in accordance with their listing.

Chapter 7 Hydrants

7.1 General.

7.1.1 Hydrants shall be of approved type and have not less than a 6 in. (152 mm) diameter connection with the mains.

7.1.1.1 A valve shall be installed in the hydrant connection.

7.1.1.2 The number, size, and arrangement of outlets; the size of the main valve opening; and the size of the barrel shall be suitable for the protection to be provided and shall be approved by the authority having jurisdiction.

7.1.1.3 Independent gate valves on 2½ in. (64 mm) outlets shall be permitted.

7.1.2* Hydrant outlet threads shall have NHS external threads for the size outlet(s) supplied as specified in NFPA 1963.

7.1.3 Where local fire department connections do not conform to NFPA 1963, the authority having jurisdiction shall designate the connection to be used.

7.1.4* Hydrants on private service mains shall not be equipped with pumper outlets unless the calculated demand for large hose [3½ in. (88.9 mm) and larger] is added to the attack hose and sprinkler system demands when determining the total demand on the fire protection water supply.

7.2 Number and Location.

7.2.1* Hydrants shall be provided and spaced in accordance with the requirements of the authority having jurisdiction.

7.2.2 Public hydrants shall be permitted to be recognized as meeting all or part of the requirements of Section 7.2.

7.2.3* Hydrants shall be located not less than 40 ft (12.2 m) from the buildings to be protected.

7.2.4 Where hydrants cannot be located in accordance with 7.2.3, locations closer than 40 ft (12.2 m) from the building or wall hydrants shall be permitted to be used where approved by the authority having jurisdiction.

7.2.5 Hydrants shall not be installed at less than the equivalent depth of burial from retaining walls where there is danger of frost through the walls.

7.3 Installation.

7.3.1* Hydrants shall be set on flat stones or concrete slabs and shall be provided with small stones (or the equivalent) placed about the drain to ensure drainage.

7.3.2 Where soil is of such a nature that the hydrants will not drain properly with the arrangement specified in 7.3.1, or where groundwater stands at levels above that of the drain, the hydrant drain shall be plugged at the time of installation.

7.3.2.1 If the drain is plugged, hydrants in service in cold climates shall be pumped out after usage.

7.3.2.2 Such hydrants shall be marked to indicate the need for pumping out after usage.

7.3.3* The center of a hose outlet shall be not less than 18 in. (457 mm) above final grade or, where located in a hose house, 12 in. (305 mm) above the floor.

7.3.4 Hydrants shall be fastened to piping and anchored in accordance with the requirements of NFPA 13.

7.3.5 Hydrants shall be protected if subject to mechanical damage.

7.3.6 The means of hydrant protection shall be arranged in a manner that does not interfere with the connection to, or operation of, hydrants.

7.3.7 The following shall not be installed in the service stub between a fire hydrant and private water supply piping:

(1) Check valves
(2) Detector check valves
(3) Backflow prevention valves
(4) Other similar appurtenances

Chapter 8 Hose Houses and Equipment

8.1 General.

8.1.1* A supply of hose and equipment shall be provided where hydrants are intended for use by plant personnel or a fire brigade.

8.1.1.1 The quantity and type of hose and equipment shall depend on the following:

(1) Number and location of hydrants relative to the protected property
(2) Extent of the hazard
(3) Fire-fighting capabilities of potential users

8.1.1.2 The authority having jurisdiction shall be consulted regarding quantity and type of hose.

8.1.2 Hose shall be stored so it is readily accessible and is protected from the weather by storing in hose houses or by placing hose reels or hose carriers in weatherproof enclosures.

8.1.3* Hose shall conform to NFPA 1961.

8.1.4 Hose Connections.

8.1.4.1 Hose connections shall have external national hose standard (NHS) threads, for the valve size specified, in accordance with NFPA 1963.

8.1.4.2 Hose connections shall be equipped with caps to protect the hose threads.

8.1.4.3 Where local fire department hose threads do not conform to NFPA 1963, the authority having jurisdiction shall designate the hose threads to be used.

8.2 Location.

8.2.1 Where hose houses are utilized, they shall be located over, or immediately adjacent to, the hydrant.

Copyright National Fire Protection Association
Provided by IHS under license with NFPA
No reproduction or networking permitted without license from IHS
Not for Resale

8.2.2 Hydrants within hose houses shall be as close to the front of the house as possible and still allow sufficient room in back of the doors for the hose gates and the attached hose.

8.2.3 Where hose reels or hose carriers are utilized, they shall be located so that the hose can be brought into use at a hydrant.

8.3 Construction.

8.3.1 Hose houses shall be of substantial construction on foundations.

8.3.2 The construction shall protect the hose from weather and vermin and shall be designed so that hose lines can be brought into use.

8.3.3 Clearance shall be provided for operation of the hydrant wrench.

8.3.4 Ventilation shall be provided.

8.3.5 The exterior shall be painted or otherwise protected against deterioration.

8.4* Size and Arrangement. Hose houses shall be of a size and arrangement that provide shelves or racks for the hose and equipment.

8.5 Marking. Hose houses shall be plainly identified.

8.6 General Equipment.

8.6.1* Where hose houses are used in addition to the hose, each shall be equipped with the following:

(1) Two approved adjustable spray–solid stream nozzles equipped with shutoffs for each size of hose provided
(2) One hydrant wrench (in addition to wrench on hydrant)
(3) Four coupling spanners for each size hose provided
(4) Two hose coupling gaskets for each size hose

8.6.2 Where two sizes of hose and nozzles are provided, reducers or gated wyes shall be included in the hose house equipment.

8.7 Domestic Service Use Prohibited. The use of hydrants and hose for purposes other than fire-related services shall be prohibited.

Chapter 9 Master Streams

9.1* Master Streams. Master streams shall be delivered by monitor nozzles, hydrant-mounted monitor nozzles, and similar master stream equipment capable of delivering more than 250 gpm (946 L/min).

9.2 Application and Special Considerations. Master streams shall be provided as protection for the following:

(1) Large amounts of combustible materials located in yards
(2) Average amounts of combustible materials in inaccessible locations
(3) Occupancies presenting special hazards as required by the authority having jurisdiction

Chapter 10 Underground Piping

10.1* Piping Materials.

10.1.1* Listing. Piping shall be listed for fire protection service and shall comply with the standards in Table 10.1.1.

Table 10.1.1 Manufacturing Standards for Underground Pipe

Materials and Dimensions	Standard
Ductile Iron	
Cement Mortar Lining for Ductile Iron Pipe and Fittings for Water	AWWA C104
Polyethylene Encasement for Ductile Iron Pipe Systems	AWWA C105
Ductile Iron and Gray Iron Fittings, 3-in. Through 48-in., for Water and Other Liquids	AWWA C110
Rubber-Gasket Joints for Ductile Iron Pressure Pipe and Fittings	AWWA C111
Flanged Ductile Iron Pipe with Ductile Iron or Gray Iron Threaded Flanges	AWWA C115
Protective Fusion-Bonded Epoxy Coatings for the Interior and Exterior Surfaces of Ductile-Iron and Gray-Iron Fittings for Water Supply Service	AWWA C116
Thickness Design of Ductile Iron Pipe	AWWA C150
Ductile Iron Pipe, Centrifugally Cast for Water	AWWA C151
Ductile-Iron Compact Fittings for Water Service	AWWA C153
Standard for the Installation of Ductile Iron Water Mains and Their Appurtenances	AWWA C600
Steel	
Steel Water Pipe 6 in. and Larger	AWWA C200
Coal-Tar Protective Coatings and Linings for Steel Water Pipelines Enamel and Tape — Hot Applied	AWWA C203
Cement-Mortar Protective Lining and Coating for Steel Water Pipe 4 in. and Larger — Shop Applied	AWWA C205
Field Welding of Steel Water Pipe	AWWA C206
Steel Pipe Flanges for Waterworks Service — Sizes 4 in. Through 144 in.	AWWA C207
Dimensions for Fabricated Steel Water Pipe Fittings	AWWA C208
A Guide for Steel Pipe Design and Installation	AWWA M11
Concrete	
Reinforced Concrete Pressure Pipe, Steel-Cylinder Type, for Water and Other Liquids	AWWA C300
Prestressed Concrete Pressure Pipe, Steel-Cylinder Type, for Water and Other Liquids	AWWA C301
Reinforced Concrete Pressure Pipe, Non-Cylinder Type, for Water and Other Liquids	AWWA C302
Reinforced Concrete Pressure Pipe, Steel-Cylinder Type, Pretensioned, for Water and Other Liquids	AWWA C303
Standard for Asbestos-Cement Distribution Pipe, 4 in. Through 16 in., for Water and Other Liquids	AWWA C400
Standard Practice for the Selection of Asbestos-Cement Water Pipe	AWWA C401
Cement-Mortar Lining of Water Pipe Lines 4 in. and Larger — in Place	AWWA C602
Standard for the Installation of Asbestos-Cement Water Pipe	AWWA C603
Plastic	
Polyvinyl Chloride (PVC) Pressure Pipe, 4 in. Through 12 in., for Water and Other Liquids	AWWA C900

Copyright National Fire Protection Association
Provided by IHS under license with NFPA
No reproduction or networking permitted without license from IHS
Not for Resale

Table 10.1.1 *Continued*

Materials and Dimensions	Standard
Polyethylene (PE) Pressure Pipe and Fittings, 4 in. (100 mm) Through 63 in. (1575 mm) for Water Distribution and Transport	AWWA C906
Copper	
Specification for Seamless Copper Tube	ASTM B 75
Specification for Seamless Copper Water Tube	ASTM B 88
Requirements for Wrought Seamless Copper and Copper-Alloy Tube	ASTM B 251

10.1.2 Steel Pipe. Steel piping shall not be used for general underground service unless specifically listed for such service.

10.1.3 Steel Pipe Used with Fire Department Connections. Where externally coated and wrapped and internally galvanized, steel pipe shall be permitted to be used between the check valve and the outside hose coupling for the fire department connection.

10.1.4* Pipe Type and Class. The type and class of pipe for a particular underground installation shall be determined through consideration of the following factors:

(1) Fire resistance of the pipe
(2) Maximum system working pressure
(3) Depth at which the pipe is to be installed
(4) Soil conditions
(5) Corrosion
(6) Susceptibility of pipe to other external loads, including earth loads, installation beneath buildings, and traffic or vehicle loads

10.1.5 Working Pressure. Pipe shall be designed to withstand a system working pressure of not less than 150 psi (10.3 bar).

10.1.6* Lining of Buried Pipe.

10.1.6.1 Unless the requirements of 10.1.6.2 are met, all ferrous metal pipe shall be lined in accordance with the applicable standards in Table 10.1.1.

10.1.6.2 Steel pipe utilized in fire department connections and protected in accordance with the requirements of 10.1.3 shall not be additionally required to be lined.

10.2 Fittings.

10.2.1 Standard Fittings. Fittings shall meet the standards in Table 10.2.1(a) or shall be in accordance with 10.2.2. In addition to the standards in Table 10.2.1(b), CPVC fittings shall also be in accordance with 10.2.2 and with the portions of the ASTM standards specified in Table 10.2.1(b) that apply to fire protection service.

10.2.2 Special Listed Fittings. Other types of fittings investigated for suitability in automatic sprinkler installations and listed for this service, including, but not limited to, polybutylene, CPVC, and steel differing from that provided in Table 10.2.1(a), shall be permitted when installed in accordance with their listing limitations, including installation instructions.

10.2.3 Pressure Limits. Listed fittings shall be permitted for the system pressures as specified in their listings, but not less than 150 psi (10 bar).

Table 10.2.1(a) Fittings Materials and Dimensions

Materials and Dimensions	Standard
Cast Iron	
Cast Iron Threaded Fittings, Class 125 and 250	ASME B16.4
Cast Iron Pipe Flanges and Flanged Fittings	ASME B16.1
Malleable Iron	
Malleable Iron Threaded Fittings, Class 150 and 300	ASME B16.3
Steel	
Factory-Made Wrought Steel Buttweld Fittings	ASME B16.9
Buttwelding Ends for Pipe, Valves, Flanges, and Fittings	ASME B16.25
Specification for Piping Fittings of Wrought Carbon Steel and Alloy Steel for Moderate and Elevated Temperatures	ASTM A 234
Steel Pipe Flanges and Flanged Fittings	ASME B16.5
Forged Steel Fittings, Socket Welded and Threaded	ASME B16.11
Copper	
Wrought Copper and Bronze Solder Joint Pressure Fittings	ASME B16.22
Cast Bronze Solder Joint Pressure Fittings	ASME B16.18

Table 10.2.1(b) Specially Listed Fittings Materials and Dimensions

Materials and Dimensions	Standard
Chlorinated Polyvinyl Chloride (CPVC) Specification for Schedule 80 CPVC Threaded Fittings	ASTM F 437
Specification for Schedule 40 CPVC Socket-Type Fittings	ASTM F 438
Specification for Schedule 80 CPVC Socket-Type Fittings	ASTM F 439

10.2.4* Buried Joints. Joints shall be approved.

10.2.5* Buried Fittings. Fittings shall be of an approved type with joints and pressure class ratings compatible with the pipe used.

10.3 Joining of Pipe and Fittings.

10.3.1 Threaded Pipe and Fittings. All threaded steel pipe and fittings shall have threads cut in accordance with ASME B1.20.1.

10.3.2 Groove Joining Methods. Pipes joined with grooved fittings shall be joined by a listed combination of fittings, gaskets, and grooves.

10.3.3 Brazed and Pressure Fitting Methods. Joints for the connection of copper tube shall be brazed or joined using pressure fittings as specified in Table 10.2.1(a).

10.3.4 Other Joining Methods. Other joining methods listed for this service shall be permitted where installed in accordance with their listing limitations.

Copyright National Fire Protection Association
Provided by IHS under license with NFPA
No reproduction or networking permitted without license from IHS
Not for Resale

10.3.5 Pipe Joint Assembly.

10.3.5.1 Joints shall be assembled by persons familiar with the particular materials being used and in accordance with the manufacturer's instructions and specifications.

10.3.5.2 All bolted joint accessories shall be cleaned and thoroughly coated with asphalt or other corrosion-retarding material after installation.

10.4 Depth of Cover.

10.4.1* The depth of cover over water pipes shall be determined by the maximum depth of frost penetration in the locality where the pipe is laid.

10.4.2 The top of the pipe shall be buried not less than 1 ft (0.3 m) below the frost line for the locality.

10.4.3 In those locations where frost is not a factor, the depth of cover shall be not less than 2½ ft (0.8 m) to prevent mechanical damage.

10.4.4 Pipe under driveways shall be buried at a minimum depth of 3 ft (0.9 m).

10.4.5 Pipe under railroad tracks shall be buried at a minimum depth of 4 ft (1.2 m).

10.4.6 The depth of cover shall be measured from the top of the pipe to finished grade, and due consideration shall always be given to future or final grade and nature of soil.

10.5 Protection Against Freezing.

10.5.1* Where it is impracticable to bury pipe, pipe shall be permitted to be laid aboveground, provided that the pipe is protected against freezing and mechanical damage.

10.5.2 Pipe shall be buried below the frost line where entering streams and other bodies of water.

10.5.3 Where pipe is laid in water raceways or shallow streams, care shall be taken that there will be sufficient depth of running water between the pipe and the frost line during all seasons of frost; a safer method is to bury the pipe 1 ft (0.3048 m) or more under the bed of the waterway.

10.5.4 Pipe shall be located at a distance from stream banks and embankment walls that prevents danger of freezing through the side of the bank.

10.6 Protection Against Damage.

10.6.1 Pipe shall not be run under buildings.

10.6.2 Where pipe must be run under buildings, special precautions shall be taken, including the following:

(1) Arching the foundation walls over the pipe
(2) Running pipe in covered trenches
(3) Providing valves to isolate sections of pipe under buildings

10.6.3 Fire service mains shall be permitted to enter the building adjacent to the foundation.

10.6.4 Where adjacent structures or physical conditions make it impractical to locate risers immediately inside an exterior wall, such risers shall be permitted to be located as close as practical to exterior walls to minimize underground piping under the building.

10.6.5 Where a riser is located close to building foundations, underground fittings of proper design and type shall be used to avoid locating pipe joints in or under the foundations.

10.6.6 Mains shall be subjected to an evaluation of the following specific loading conditions and protected, if necessary:

(1) Mains running under railroads carrying heavy cargo
(2) Mains running under large piles of heavy commodities
(3) Mains located in areas that subject the main to heavy shock and vibrations

10.6.7* Where it is necessary to join metal pipe with pipe of dissimilar metal, the joint shall be insulated against the passage of an electric current using an approved method.

10.6.8* In no case shall the underground piping be used as a grounding electrode for electrical systems. This does not preclude the bonding of the underground piping to the lightning protection grounding system as required by NFPA 780 in those cases where lightning protection is provided for the structure.

10.7 Requirement for Laying Pipe.

10.7.1 Pipes, valves, hydrants, gaskets, and fittings shall be inspected for damage when received and shall be inspected prior to installation. *(See Figure 10.10.1.)*

10.7.2 The torquing of bolted joints shall be checked.

10.7.3 Pipe, valves, hydrants, and fittings shall be clean inside.

10.7.4 When work is stopped, the open ends of pipe, valves, hydrants, and fittings shall be plugged to prevent stones and foreign materials from entering.

10.7.5 All pipe, fittings, valves, and hydrants shall be carefully lowered into the trench using appropriate equipment and carefully examined for cracks or other defects while suspended above the trench.

10.7.6 Plain ends shall be inspected for signs of damage prior to installation.

10.7.7 Under no circumstances shall water main materials be dropped or dumped.

10.7.8 Pipe shall not be rolled or skidded against other pipe materials.

10.7.9 Pipes shall bear throughout their full length and shall not be supported by the bell ends only or by blocks.

10.7.10 If the ground is soft or of a quicksand nature, special provisions shall be made for supporting pipe.

10.7.11 Valves and fittings used with nonmetallic pipe shall be supported and restrained in accordance with the manufacturer's specifications.

10.8 Joint Restraint.

10.8.1 General.

10.8.1.1* All tees, plugs, caps, bends, reducers, valves, and hydrant branches shall be restrained against movement by using thrust blocks in accordance with 10.8.2 or restrained joint systems in accordance with 10.8.3.

10.8.1.2 Piping with fused, threaded, grooved, or welded joints shall not require additional restraining, provided that such joints can pass the hydrostatic test of 10.10.2.2 without shifting of piping or leakage in excess of permitted amounts.

10.8.1.3 Steep Grades. On steep grades, mains shall be additionally restrained to prevent slipping.

10.8.1.3.1 Pipe shall be restrained at the bottom of a hill and at any turns (lateral or vertical).

Copyright National Fire Protection Association
Provided by IHS under license with NFPA
No reproduction or networking permitted without license from IHS
Not for Resale

10.8.1.3.2 The restraint specified in 10.8.1.3.1 shall be to natural rock or to suitable piers built on the downhill side of the bell.

10.8.1.3.3 Bell ends shall be installed facing uphill.

10.8.1.3.4 Straight runs on hills shall be restrained as determined by the design engineer.

10.8.2* Thrust Blocks.

10.8.2.1 Thrust blocks shall be considered satisfactory where soil is suitable for their use.

10.8.2.2 Thrust blocks shall be of a concrete mix not leaner than one part cement, two and one-half parts sand, and five parts stone.

10.8.2.3 Thrust blocks shall be placed between undisturbed earth and the fitting to be restrained and shall be capable of such bearing to ensure adequate resistance to the thrust to be encountered.

10.8.2.4 Wherever possible, thrust blocks shall be placed so that the joints are accessible for repair.

10.8.3* Restrained Joint Systems. Fire mains utilizing restrained joint systems shall include one or more of the following:

(1) Locking mechanical or push-on joints
(2) Mechanical joints utilizing setscrew retainer glands
(3) Bolted flange joints
(4) Heat-fused or welded joints
(5) Pipe clamps and tie rods
(6) Other approved methods or devices

10.8.3.1 Sizing Clamps, Rods, Bolts, and Washers.

10.8.3.1.1 Clamps.

10.8.3.1.1.1 Clamps shall have the following dimensions:

(1) ½ in. × 2 in. (12.7 mm × 50.8 mm) for pipe 4 in. to 6 in.
(2) ⅝ in. × 2½ in. (15.9 mm × 63.5 mm) for pipe 8 in. to 10 in.
(3) ⅝ in. × 3 in. (15.9 mm × 76.2 mm) for 12 in. pipe

10.8.3.1.1.2 The diameter of a bolt hole shall be 1⁄16 in. (1.6 mm) larger than that of the corresponding bolt.

10.8.3.1.2 Rods.

10.8.3.1.2.1 Rods shall be not less than ⅝ in. (15.9 mm) in diameter.

10.8.3.1.2.2 Table 10.8.3.1.2.2 provides the numbers of various diameter rods that shall be used for a given pipe size.

Table 10.8.3.1.2.2 Rod Number — Diameter Combinations

Nominal Pipe Size (in.)	⅝ in. (15.9 mm)	¾ in. (19.1 mm)	⅞ in. (22.2 mm)	1 in. (25.4 mm)
4	2	—	—	—
6	2	—	—	—
8	3	2	—	—
10	4	3	2	—
12	6	4	3	2
14	8	5	4	3
16	10	7	5	4

Note: This table has been derived using pressure of 225 psi (15.5 bar) and design stress of 25,000 psi (172.4 MPa).

10.8.3.1.2.3 Where using bolting rods, the diameter of mechanical joint bolts shall limit the diameter of rods to ¾ in. (19.1 mm).

10.8.3.1.2.4 Threaded sections of rods shall not be formed or bent.

10.8.3.1.2.5 Where using clamps, rods shall be used in pairs for each clamp.

10.8.3.1.2.6 Assemblies in which a restraint is made by means of two clamps canted on the barrel of the pipe shall be permitted to use one rod per clamp if approved for the specific installation by the authority having jurisdiction.

10.8.3.1.2.7 Where using combinations of rods, the rods shall be symmetrically spaced.

10.8.3.1.3 Clamp Bolts. Clamp bolts shall have the following diameters:

(1) ⅝ in. (15.9 mm) for pipe 4 in., 6 in., and 8 in.
(2) ¾ in. (19.1 mm) for pipe 10 in.
(3) ⅞ in. (22.2 mm) for 12 in. pipe

10.8.3.1.4 Washers.

10.8.3.1.4.1 Washers shall be permitted to be cast iron or steel and round or square.

10.8.3.1.4.2 Cast-iron washers shall have the following dimensions:

(1) ⅝ in. × 3 in. (15.9 mm × 76.2 mm) for 4 in., 6 in., 8 in., and 10 in. pipe
(2) ¾ in. × 3½ in. (19.1 mm × 88.9 mm) for 12 in. pipe

10.8.3.1.4.3 Steel washers shall have the following dimensions:

(1) ½ in. × 3 in. (12.7 mm × 76.2 mm) for 4 in., 6 in., 8 in., and 10 in. pipe
(2) ½ in. × 3½ in. (12.7 mm × 88.9 mm) for 12 in. pipe

10.8.3.1.4.4 The diameter of holes shall be ⅛ in. (3.2 mm) larger than that of rods.

10.8.3.2 Sizes of Restraint Straps for Tees.

10.8.3.2.1 Restraint straps for tees shall have the following dimensions:

(1) ⅝ in. (15.9 mm) thick and 2½ in. (63.5 mm) wide for 4 in., 6 in., 8 in., and 10 in. pipe
(2) ⅝ in. (15.9 mm) thick and 3 in. (76.2 mm) wide for 12 in. pipe

10.8.3.2.2 The diameter of rod holes shall be 1⁄16 in. (1.6 mm) larger than that of rods.

10.8.3.2.3 Figure 10.8.3.2.3 and Table 10.8.3.2.3 shall be used in sizing the restraint straps for both mechanical and push-on joint tee fittings.

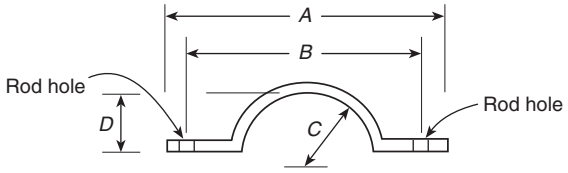

FIGURE 10.8.3.2.3 Restraint Straps for Tees.

Copyright National Fire Protection Association
Provided by IHS under license with NFPA
No reproduction or networking permitted without license from IHS
Not for Resale

Table 10.8.3.2.3 Restraint Straps for Tees

Nominal Pipe Size (in.)	A		B		C		D	
	in.	mm	in.	mm	in.	mm	in.	mm
4	12½	318	10⅛	257	2½	64	1¾	44
6	14½	368	12⅛	308	3 9/16	90	2 13/16	71
8	16¾	425	14⅜	365	4 21/32	118	3 29/32	99
10	19 1/16	484	16 11/16	424	5¾	146	5	127
12	22 5/16	567	19 3/16	487	6¾	171	5⅞	149

10.8.3.3 Sizes of Plug Strap for Bell End of Pipe.

10.8.3.3.1 The strap shall be ¾ in. (19.1 mm) thick and 2½ in. (63.5 mm) wide.

10.8.3.3.2 The strap length shall be the same as dimension *A* for tee straps as shown in Figure 10.8.3.2.3.

10.8.3.3.3 The distance between the centers of rod holes shall be the same as dimension *B* for tee straps as shown in Figure 10.8.3.2.3.

10.8.3.4 Material. Clamps, rods, rod couplings or turnbuckles, bolts, washers, restraint straps, and plug straps shall be of a material that has physical and chemical characteristics that indicate its deterioration under stress can be predicted with reliability.

10.8.3.5* Corrosion Resistance. After installation, rods, nuts, bolts, washers, clamps, and other restraining devices shall be cleaned and thoroughly coated with a bituminous or other acceptable corrosion-retarding material.

10.9 Backfilling.

10.9.1 Backfill shall be tamped in layers or puddled under and around pipes to prevent settlement or lateral movement and shall contain no ashes, cinders, refuse, organic matter, or other corrosive materials.

10.9.2 Rocks shall not be placed in trenches.

10.9.3 Frozen earth shall not be used for backfilling.

10.9.4 In trenches cut through rock, tamped backfill shall be used for at least 6 in. (150 mm) under and around the pipe and for at least 2 ft (0.6 m) above the pipe.

10.10 Testing and Acceptance.

10.10.1 Approval of Underground Piping. The installing contractor shall be responsible for the following:

(1) Notifying the authority having jurisdiction and the owner's representative of the time and date testing is to be performed
(2) Performing all required acceptance tests
(3) Completing and signing the contractor's material and test certificate(s) shown in Figure 10.10.1.

10.10.2 Acceptance Requirements.

10.10.2.1* Flushing of Piping.

10.10.2.1.1 Underground piping, from the water supply to the system riser, and lead-in connections to the system riser shall be completely flushed before the connection is made to downstream fire protection system piping.

10.10.2.1.2 The flushing operation shall be continued for a sufficient time to ensure thorough cleaning.

10.10.2.1.3 The minimum rate of flow shall be not less than one of the following:

(1) Hydraulically calculated water demand flow rate of the system, including any hose requirements
(2) Flow necessary to provide a velocity of 10 ft/sec (3.1 m/sec) in accordance with Table 10.10.2.1.3
(3) Maximum flow rate available to the system under fire conditions

Table 10.10.2.1.3 Flow Required to Produce a Velocity of 10 ft/sec (3 m/sec) in Pipes

Pipe Size		Flow Rate	
in.	mm	gpm	L/min
4	102	390	1,476
6	152	880	3,331
8	203	1,560	5,905
10	254	2,440	9,235
12	305	3,520	13,323

10.10.2.2 Hydrostatic Test.

10.10.2.2.1* All piping and attached appurtenances subjected to system working pressure shall be hydrostatically tested at 200 psi (13.8 bar) or 50 psi (3.5 bar) in excess of the system working pressure, whichever is greater, and shall maintain that pressure at ±5 psi (0.35 bar) for 2 hours.

10.10.2.2.2 Pressure loss shall be determined by a drop in gauge pressure or visual leakage.

10.10.2.2.3 The test pressure shall be read from one of the following, located at the lowest elevation of the system or the portion of the system being tested:

(1) A gauge located at one of the hydrant outlets
(2) A gauge located at the lowest point where no hydrants are provided

Copyright National Fire Protection Association
Provided by IHS under license with NFPA
No reproduction or networking permitted without license from IHS
Not for Resale

Contractor's Material and Test Certificate for Underground Piping

PROCEDURE

Upon completion of work, inspection and tests shall be made by the contractor's representative and witnessed by an owner's representative. All defects shall be corrected and system left in service before contractor's personnel finally leave the job.

A certificate shall be filled out and signed by both representatives. Copies shall be prepared for approving authorities, owners, and contractor. It is understood the owner's representative's signature in no way prejudices any claim against contractor for faulty material, poor workmanship, or failure to comply with approving authority's requirements or local ordinances.

Property name		Date
Property address		
Plans	Accepted by approving authorities (names)	
	Address	
	Installation conforms to accepted plans	❑ Yes ❑ No
	Equipment used is approved If no, state deviations	❑ Yes ❑ No
Instructions	Has person in charge of fire equipment been instructed as to location of control valves and care and maintenance of this new equipment? If no, explain	❑ Yes ❑ No
	Have copies of appropriate instructions and care and maintenance charts been left on premises? If no, explain	❑ Yes ❑ No
Location	Supplies buildings	
Underground pipes and joints	Pipe types and class	Type joint
	Pipe conforms to _____ standard Fittings conform to _____ standard If no, explain	❑ Yes ❑ No ❑ Yes ❑ No
	Joints needing anchorage clamped, strapped, or blocked in accordance with _____ standard If no, explain	❑ Yes ❑ No
Test description	Flushing: Flow the required rate until water is clear as indicated by no collection of foreign material in burlap bags at outlets such as hydrants and blow-offs. Flush at flows not less than 390 gpm (1476 L/min) for 4 in. pipe, 880 gpm (3331 L/min) for 6 in. pipe, 1560 gpm (5905 L/min) for 8 in. pipe, 2440 gpm (9235 L/min) for 10 in. pipe, and 3520 gpm (13,323 L/min) for 12 in. pipe. When supply cannot produce stipulated flow rates, obtain maximum available. Hydrostatic: All piping and attached appurtenances subjected to system working pressure shall be hydrostatically tested at 200 psi (13.8 bar) or 50 psi (3.4 bar) in excess of the system working pressure, whichever is greater, and shall maintain that pressure ± 5 psi for 2 hours. Hydrostatic Testing Allowance: Where additional water is added to the system to maintain the test pressures required by 10.10.2.2.1, the amount of water shall be measured and shall not exceed the limits of the following equation (For metric equation, see 10.10.2.2.4): $L = \frac{SD\sqrt{P}}{148{,}000}$ L = testing allowance (makeup water), in gallons per hour S = length of pipe tested, in feet D = nominal diameter of the pipe, in inches P = average test pressure during the hydrostatic test, in pounds per square inch (gauge)	
Flushing tests	New underground piping flushed according to _____ standard by (company) If no, explain	❑ Yes ❑ No
	How flushing flow was obtained ❑ Public water ❑ Tank or reservoir ❑ Fire pump	Through what type opening ❑ Hydrant butt ❑ Open pipe
	Lead-ins flushed according to _____ standard by (company) If no, explain	❑ Yes ❑ No
	How flushing flow was obtained ❑ Public water ❑ Tank or reservoir ❑ Fire pump	Through what type opening ❑ Y connection to flange and spigot ❑ Open pipe

© 2007 National Fire Protection Association

FIGURE 10.10.1 Sample of Contractor's Material and Test Certificate for Underground Piping.

Copyright National Fire Protection Association
Provided by IHS under license with NFPA
No reproduction or networking permitted without license from IHS
Not for Resale

Hydrostatic test	All new underground piping hydrostatically tested at _____ psi for _____ hours		Joints covered ❑ Yes ❑ No
Leakage test	Total amount of leakage measured _____ gallons _____ hours		
	Allowable leakage _____ gallons _____ hours		
Hydrants	Number installed	Type and make	All operate satisfactorily ❑ Yes ❑ No
Control valves	Water control valves left wide open If no, state reason		❑ Yes ❑ No
	Hose threads of fire department connections and hydrants interchangeable with those of fire department answering alarm		❑ Yes ❑ No
Remarks	Date left in service		
Signatures	Name of installing contractor		
	Tests witnessed by		
	For property owner (signed)	Title	Date
	For installing contractor (signed)	Title	Date

Additional explanation and notes

© 2007 National Fire Protection Association

FIGURE 10.10.1 ***Continued***

Copyright National Fire Protection Association
Provided by IHS under license with NFPA
No reproduction or networking permitted without license from IHS
Not for Resale

10.10.2.2.4* Hydrostatic Testing Allowance. Where additional water is added to the system to maintain the test pressures required by 10.10.2.2.1, the amount of water shall be measured and shall not exceed the limits of Table 10.10.2.2.4 which is based upon the following equation:

U.S. Customary Units:

$$L = \frac{SD\sqrt{P}}{148{,}000} \qquad [10.10.2.2.4(a)]$$

where:
L = testing allowance (makeup water), in gallons per hour
S = length of pipe tested, feet
D = nominal diameter of the pipe, in inches
P = average test pressure during the hydrostatic test, in pounds per square inch (gauge)

Metric Units:

$$L = \frac{SD\sqrt{P}}{794{,}797} \qquad [10.10.2.2.4(b)]$$

where:
L = testing allowance (makeup water), in liters per hour
S = length of pipe tested, meters
D = nominal diameter of the pipe, in millimeters
P = average test pressure during the hydrostatic test, in kPa

Table 10.10.2.2.4 Hydrostatic Testing Allowance at 200 psi per 100 Feet of Pipe

Nominal Pipe Diameter (in.)	Testing Allowance in Gallons per Hour (gph) per 100 Feet of Pipe
2	0.019
4	0.038
6	0.057
8	0.076
10	0.096
12	0.115
14	0.134
16	0.153
18	0.172
20	0.191
24	0.229

Notes:
(1) For other length, diameters, and pressures, utilize Equation 10.10.2.2.4(a) or (b) to determine the appropriate testing allowance.
(2) For test sections that contain various sizes and sections of pipe the testing allowance is the sum of the testing allowances for each size and section.

10.10.2.3 Other Means of Hydrostatic Tests. Where required by the authority having jurisdiction, hydrostatic tests shall be permitted to be completed in accordance with the requirements of AWWA C600, AWWA C602, AWWA C603, and AWWA C900.

10.10.2.4 Operating Test.

10.10.2.4.1 Each hydrant shall be fully opened and closed under system water pressure.

10.10.2.4.2 Dry barrel hydrants shall be checked for proper drainage.

10.10.2.4.3 All control valves shall be fully closed and opened under system water pressure to ensure proper operation.

10.10.2.4.4 Where fire pumps are available, the operating tests required by 10.10.2.4 shall be completed with the pumps running.

10.10.2.5 Backflow Prevention Assemblies.

10.10.2.5.1 The backflow prevention assembly shall be forward flow tested to ensure proper operation.

10.10.2.5.2 The minimum flow rate required by 10.10.2.5.1 shall be the system demand, including hose stream demand where applicable.

10.10.2.6* The trench shall be backfilled between joints before testing to prevent movement of pipe.

10.10.2.7 Where required for safety measures presented by the hazards of open trenches, the pipe and joints shall be permitted to be backfilled, provided the installing contractor takes the responsibility for locating and correcting leakage.

10.10.2.8 Provision shall be made for the proper disposal of water used for flushing or testing.

Chapter 11 Hydraulic Calculations

11.1* Calculations in English Units. Pipe friction losses shall be determined based on the Hazen–Williams formula, as follows:

$$p = \frac{4.52Q^{1.85}}{C^{1.85}d^{4.87}}$$

where:
p = frictional resistance (psi/ft of pipe)
Q = flow (gpm)
C = friction loss coefficient
d = actual internal diameter of pipe (in.)

11.2 Calculations in SI Units. Pipe friction losses shall be determined based on the Hazen–Williams formula in SI units, as follows:

$$p_m = 6.05\left(\frac{Q_m^{1.85}}{C^{1.85}d_m^{4.87}}\right)10^5$$

where:
p_m = frictional resistance (bar/m of pipe)
Q_m = flow (L/min)
C = friction loss coefficient
d_m = actual internal diameter of pipe (mm)

Copyright National Fire Protection Association
Provided by IHS under license with NFPA
No reproduction or networking permitted without license from IHS
Not for Resale

Chapter 12 Aboveground Pipe and Fittings

12.1 General. Aboveground pipe and fittings shall comply with the applicable sections of Chapters 6 and 8 of NFPA 13 that address pipe, fittings, joining methods, hangers, and installation.

12.2 Protection of Piping.

12.2.1 Aboveground piping for private fire service mains shall not pass through hazardous areas and shall be located so that it is protected from mechanical and fire damage.

12.2.2 Aboveground piping shall be permitted to be located in hazardous areas protected by an automatic sprinkler system.

12.2.3 Where aboveground water-filled supply pipes, risers, system risers, or feed mains pass through open areas, cold rooms, passageways, or other areas exposed to freezing temperatures, the pipe shall be protected against freezing by the following:

(1) Insulating coverings
(2) Frostproof casings
(3) Other reliable means capable of maintaining a minimum temperature between 40°F and 120°F (4°C and 48.9°C)

12.2.4 Where corrosive conditions exist or piping is exposed to the weather, corrosion-resistant types of pipe, fittings, and hangers or protective corrosion-resistant coatings shall be used.

12.2.5 To minimize or prevent pipe breakage where subject to earthquakes, aboveground pipe shall be protected in accordance with the seismic requirements of NFPA 13.

12.2.6 Mains that pass through walls, floors, and ceilings shall be provided with clearances in accordance with NFPA 13.

Chapter 13 Sizes of Aboveground and Buried Pipe

13.1 Private Service Mains. Pipe smaller than 6 in. (152 mm) in diameter shall not be installed as a private service main supplying hydrants.

13.2 Mains Not Supplying Hydrants. For mains that do not supply hydrants, sizes smaller than 6 in. (152 mm) shall be permitted to be used, subject to the following restrictions:

(1) The main shall supply only the following types of systems:
   (a) Automatic sprinkler systems
   (b) Open sprinkler systems
   (c) Water spray fixed systems
   (d) Foam systems
   (e) Class II standpipe systems
(2) Hydraulic calculations shall show that the main is able to supply the total demand at the appropriate pressure.
(3) Systems that are not hydraulically calculated shall have a main at least as large as the riser.

13.3 Mains Supplying Fire Protection Systems. The size of private fire service mains supplying fire protection systems shall be approved by the authority having jurisdiction, and the following factors shall be considered:

(1) Construction and occupancy of the plant
(2) Fire flow and pressure of the water required
(3) Adequacy of the water supply

Chapter 14 System Inspection, Testing, and Maintenance

14.1 General. A private fire service main and its appurtenances installed in accordance with this standard shall be properly inspected, tested, and maintained in accordance with NFPA 25 to provide at least the same level of performance and protection as designed.

Annex A Explanatory Material

Annex A is not a part of the requirements of this NFPA document but is included for informational purposes only. This annex contains explanatory material, numbered to correspond with the applicable text paragraphs.

A.3.2.1 Approved. The National Fire Protection Association does not approve, inspect, or certify any installations, procedures, equipment, or materials; nor does it approve or evaluate testing laboratories. In determining the acceptability of installations, procedures, equipment, or materials, the authority having jurisdiction may base acceptance on compliance with NFPA or other appropriate standards. In the absence of such standards, said authority may require evidence of proper installation, procedure, or use. The authority having jurisdiction may also refer to the listings or labeling practices of an organization that is concerned with product evaluations and is thus in a position to determine compliance with appropriate standards for the current production of listed items.

A.3.2.2 Authority Having Jurisdiction (AHJ). The phrase "authority having jurisdiction," or its acronym AHJ, is used in NFPA documents in a broad manner, since jurisdictions and approval agencies vary, as do their responsibilities. Where public safety is primary, the authority having jurisdiction may be a federal, state, local, or other regional department or individual such as a fire chief; fire marshal; chief of a fire prevention bureau, labor department, or health department; building official; electrical inspector; or others having statutory authority. For insurance purposes, an insurance inspection department, rating bureau, or other insurance company representative may be the authority having jurisdiction. In many circumstances, the property owner or his or her designated agent assumes the role of the authority having jurisdiction; at government installations, the commanding officer or departmental official may be the authority having jurisdiction.

A.3.2.4 Listed. The means for identifying listed equipment may vary for each organization concerned with product evaluation; some organizations do not recognize equipment as listed unless it is also labeled. The authority having jurisdiction should utilize the system employed by the listing organization to identify a listed product.

A.3.3.11 Private Fire Service Main. See Figure A.3.3.11.

A.4.1 Underground mains should be designed so that the system can be extended with a minimum of expense. Possible future plant expansion should also be considered and the piping designed so that it is not covered by buildings.

A.5.1 If possible, dead-end mains should be avoided by arranging for mains to be supplied from both directions. Where private fire service mains are connected to dead-end public mains, each situation should be examined to determine if it is practical to request the water utility to loop the mains to obtain a more reliable supply.

Copyright National Fire Protection Association
Provided by IHS under license with NFPA
No reproduction or networking permitted without license from IHS
Not for Resale

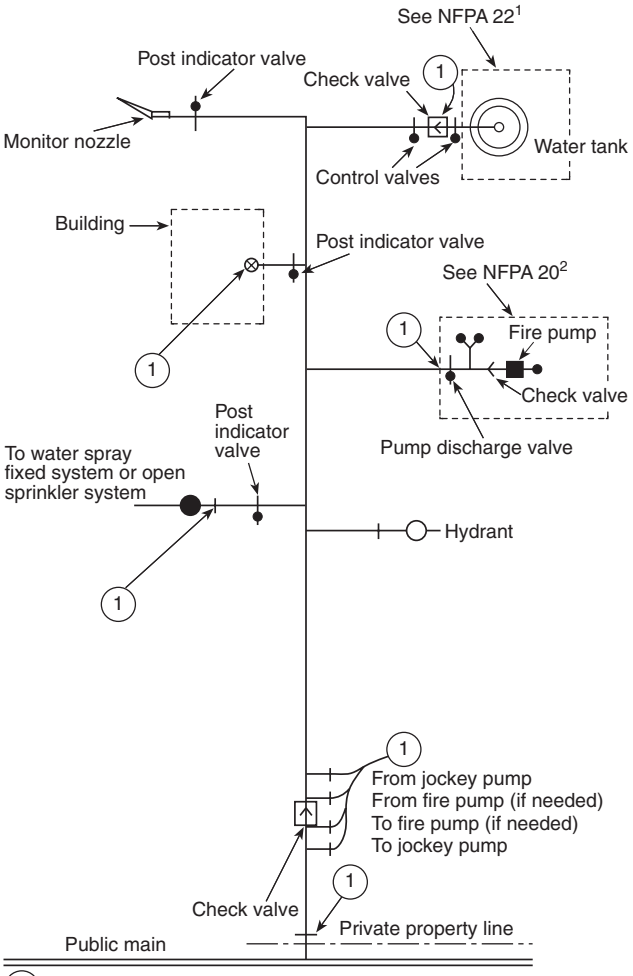

Note: The piping (aboveground or buried) shown is specific as to the end of the private fire service main, and this schematic is only for illustrative purposes beyond the end of the fire service main. Details of valves and their location requirements are covered in the specific standard involved.

1. See NFPA 22, *Standard for Water Tanks for Private Fire Protection,* 2003.
2. See NFPA 20, *Standard for the Installation of Stationary Pumps for Fire Protection,* 2007.

FIGURE A.3.3.11 Typical Private Fire Service Main.

A.5.4 Where connections are made from public waterworks systems, such systems should be guarded against possible contamination as follows (see AWWA M14):

(1) For private fire service mains with direct connections from public waterworks mains only or with booster pumps installed in the connections from the street mains, no tanks or reservoirs, no physical connection from other water supplies, no antifreeze or other additives of any kind, and with all drains discharging to atmosphere, dry well, or other safe outlets, no backflow protection is recommended at the service connection.

(2) For private fire service mains with direct connection from the public water supply main plus one or more elevated storage tanks or fire pumps taking suction from aboveground covered reservoirs or tanks (all storage facilities are filled or connected to public water only, and the water in the tanks is to be maintained in a potable condition), an approved double check valve assembly is recommended.

(3) For private fire service mains directly supplied from public mains with an auxiliary water supply, such as a pond or river on or available to the premises and dedicated to fire department use; or for systems supplied from public mains and interconnected with auxiliary supplies, such as pumps taking suction from reservoirs exposed to contamination or rivers and ponds; driven wells, mills, or other industrial water systems; or for systems or portions of systems where antifreeze or other solutions are used, an approved reduced pressure zone-type backflow preventer is recommended.

A.5.6 A fire pump installation consisting of pump, driver, and suction supply, when of adequate capacity and reliability and properly located, makes a good supply. An automatically controlled fire pump taking water from a water main of adequate capacity, or taking draft under a head from a reliable storage of adequate capacity, shall be permitted to be, under certain conditions, accepted by the authority having jurisdiction as a single supply.

A.5.9 The fire department connection should be located not less than 18 in. (457 mm) and not more than 4 ft (1.2 m) above the level of the adjacent grade or access level. Typical fire department connections are shown in Figure A.5.9(a) and Figure A.5.9(b). Fire department connections should be located and arranged so that hose lines can be readily and conveniently attached without interference from nearby objects including buildings, fences, posts, or other fire department connections. Where a hydrant is not available, other water supply sources such as a natural body of water, a tank, or reservoir should be utilized. The water authority should be consulted when a nonpotable water supply is proposed as a suction source for the fire department.

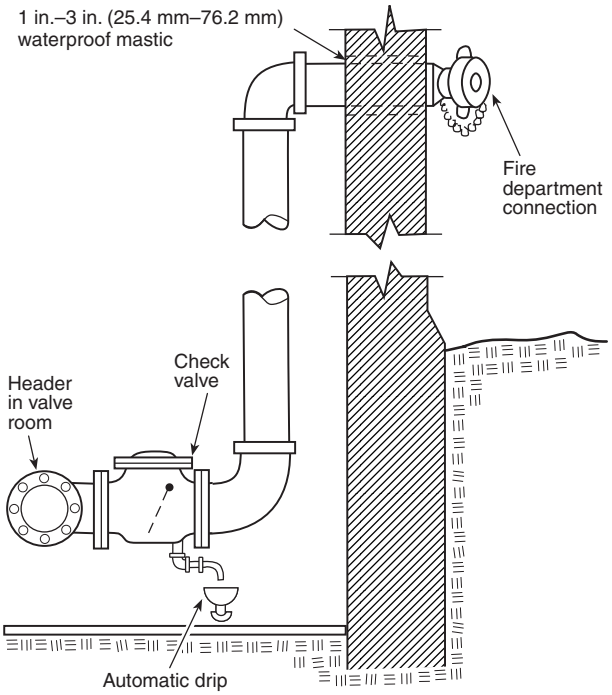

FIGURE A.5.9(a) Typical Fire Department Connection.

Copyright National Fire Protection Association
Provided by IHS under license with NFPA
No reproduction or networking permitted without license from IHS
Not for Resale

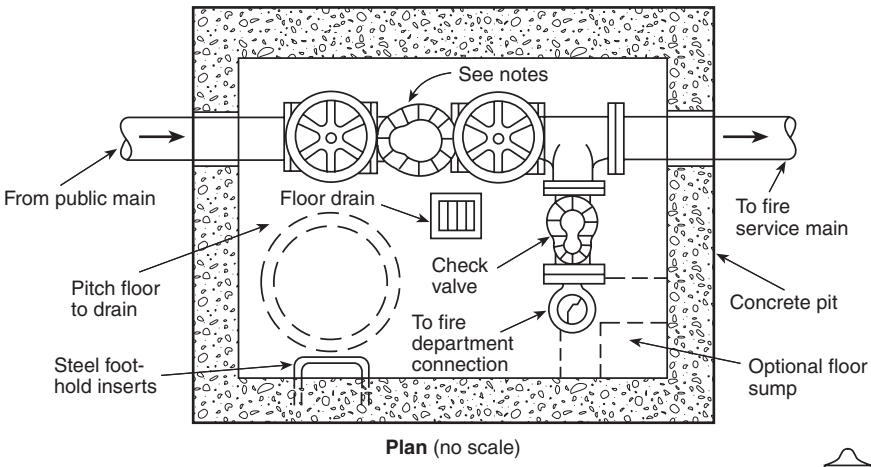

Plan (no scale)

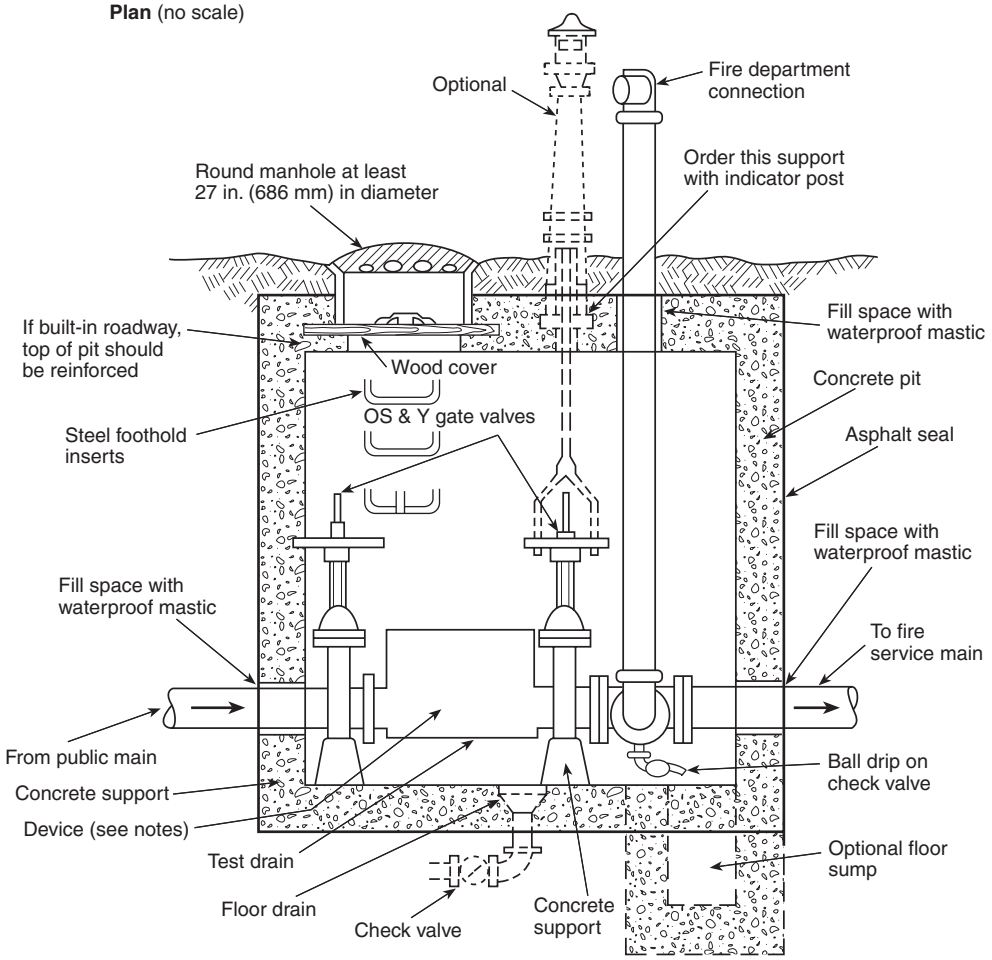

Section (no scale)

Notes:
1. Various backflow prevention regulations accept different devices at the connection between public water mains and private fire service mains.
2. The device shown in the pit could be any or a combination of the following:
   (a) Gravity check valve
   (b) Detector check valve
   (c) Double check valve assembly
   (d) Reduced pressure zone (RPZ) device
   (e) Vacuum breaker
3. Some backflow prevention regulations prohibit these devices from being installed in a pit.
4. In all cases, the device(s) in the pit should be approved or listed as necessary. The requirements of the local or municipal water department should be reviewed prior to design or installation of the connection.
5. Pressure drop should be considered prior to the installation of any backflow prevention device.

FIGURE A.5.9(b) Typical City Water Pit — Valve Arrangement.

Copyright National Fire Protection Association
Provided by IHS under license with NFPA
No reproduction or networking permitted without license from IHS
Not for Resale

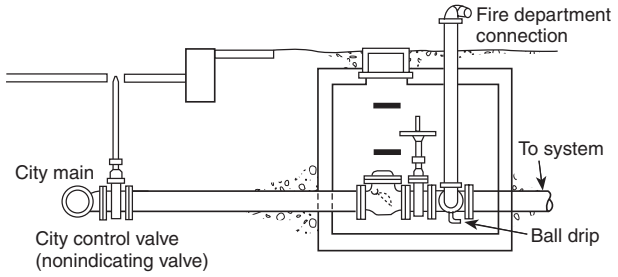

FIGURE A.6.2.5 Pit for Gate Valve, Check Valve, and Fire Department Connection.

A.6.2.5 See Figure A.6.2.5. For additional information on controlling valves, see NFPA 22.

A.6.2.7 For additional information on controlling valves, see NFPA 22.

A.6.2.8 For additional information on controlling valves, see NFPA 22.

A.6.2.9(1) Where located underground, check valves on tank or pump connections can be placed inside of buildings and at a safe distance from the tank riser or pump, except in cases where the building is entirely of one fire area. Where the building is one fire area, it is ordinarily considered satisfactory to locate the check valve overhead in the lowest level.

A.6.2.10 It might be necessary to provide valves located in pits with an indicator post extending above grade or other means so that the valve can be operated without entering the pit.

A.6.3.1 Outside control valves are recommended in the following order of preference:

(1) Listed indicating valves at each connection into the building at least 40 ft (12.2 m) from buildings if space allows
(2) Control valves installed in a cut-off stair tower or valve room accessible from outside
(3) Valves located in risers with indicating posts arranged for outside operation
(4) Key-operated valves in each connection into the building

A.6.3.3.2 Usually, in crowded plant yards, indicator valves can be placed beside low buildings, near brick stair towers, or at angles formed by substantial brick walls that are not likely to fall.

A.6.4.3 A valve wrench with a long handle should be provided at a convenient location on the premises.

A.6.6.2 See Annex B.

A.7.1.2 All barrels should be white except in cases where another color has already been adopted. The tops and nozzle caps should be painted with the following capacity-indicating color scheme to provide simplicity and consistency with colors used in signal work for safety, danger, and intermediate condition:

(1) Class AA — light blue
(2) Class A — green
(3) Class B — yellow
(4) Class C — red

For rapid identification at night, it is recommended that the capacity colors be of a reflective-type paint.

Hydrants rated at less than 20 psi (1.4 bar) should have the rated pressure stenciled in black on the hydrant top.

In addition to the painted top and nozzle caps, it can be advantageous to stencil the rated capacity of high-volume hydrants on the top.

The classification and marking of hydrants provided for in Chapter 5 anticipate determination based on an individual flow test. Where a group of hydrants can be used during a fire, some special marking designating group-flow capacity can be desirable.

A.7.1.4 Location markers for flush hydrants should carry the same color background as specified in A.7.1.2 for class indication, with other such data stenciled thereon as deemed necessary.

Marking on private hydrants within private enclosures is to be done at the owner's discretion.

When private hydrants are located on public streets, they should be painted red, or another color, to distinguish them from public hydrants.

A.7.2.1 Fire department pumpers will normally be required to augment the pressure available from public hydrants.

A.7.2.3 Where wall hydrants are used, the authority having jurisdiction should be consulted regarding the necessary water supply and arrangement of control valves at the point of supply in each individual case. *(See Figure A.7.2.3.)*

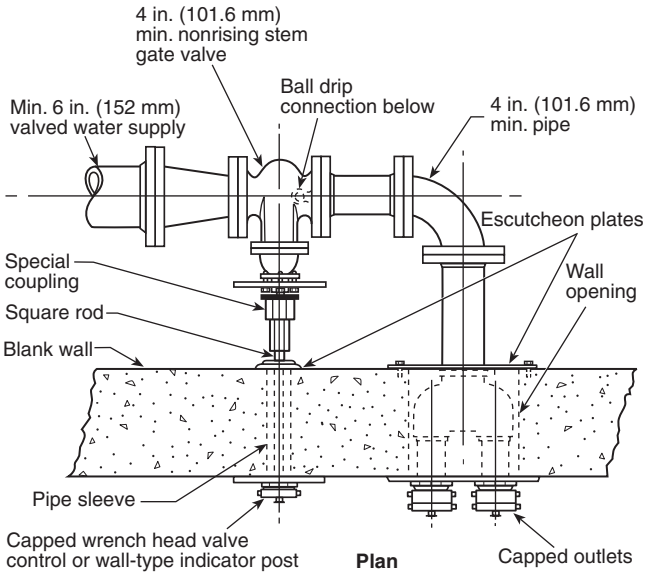

FIGURE A.7.2.3 Typical Wall Fire Hydrant Installation.

A.7.3.1 See Figure A.7.3.1(a) and Figure A.7.3.1(b).

A.7.3.3 When setting hydrants, due regard should be given to the final grade line.

A.8.1.1 All hose should not be removed from a hose house for testing at the same time, since the time taken to return the hose in case of fire could allow a fire to spread beyond control. (See NFPA 1962.)

A.8.1.3 Where hose will be subjected to acids, acid fumes, or other corrosive materials, as in chemical plants, the purchase of approved rubber-covered, rubber-lined hose is advised. For hose used in plant yards containing rough surfaces that cause heavy wear or used where working pressures are above 150 psi (10.3 bar), double-jacketed hose should be considered.

Copyright National Fire Protection Association
Provided by IHS under license with NFPA
No reproduction or networking permitted without license from IHS
Not for Resale

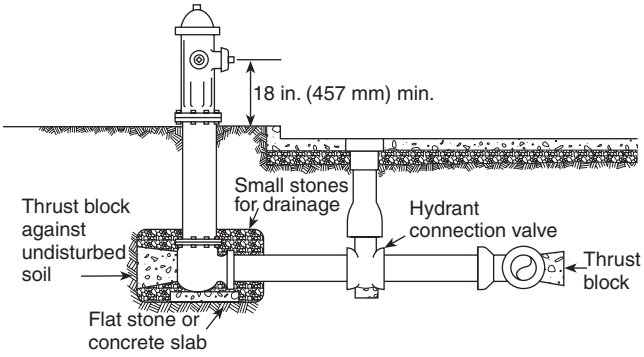

FIGURE A.7.3.1(a) Typical Hydrant Connection with a Minimum Height Requirement.

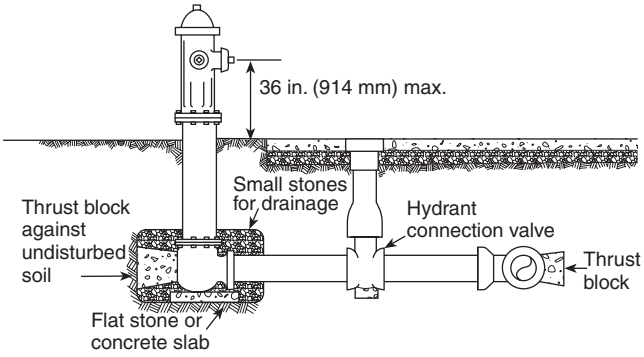

FIGURE A.7.3.1(b) Typical Hydrant Connection with Maximum Height Requirement.

A.8.4 Typical hose houses are shown in Figure A.8.4(a) through Figure A.8.4(c).

A.8.6.1 All hose should not be removed from a hose house for testing at the same time, since the time taken to return the hose in case of fire could allow a fire to spread beyond control. (See NFPA 1962.)

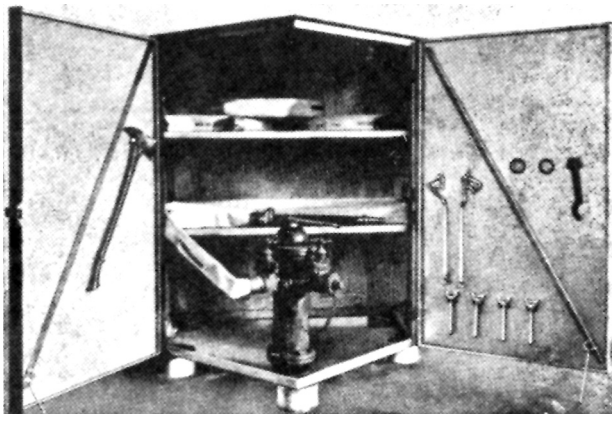

FIGURE A.8.4(a) House of Five-Sided Design for Installation over a Private Hydrant.



FIGURE A.8.4(b) Closed Steel House of Compact Dimensions for Installation over a Private Hydrant, in Which Top Lifts Up and Doors on Front Side Open for Complete Accessibility.

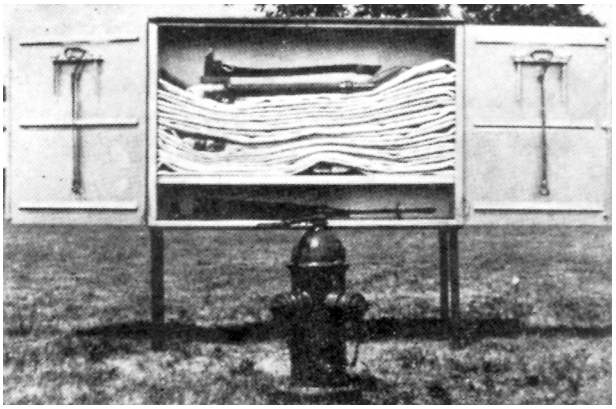

FIGURE A.8.4(c) Hose House That Can Be Installed on Legs, as Shown, or Installed on a Wall near, But Not Directly over, a Private Hydrant.

A.9.1 For typical master stream devices, see Figure A.9.1(a) and Figure A.9.1(b). Gear control nozzles are acceptable for use as monitor nozzles.

A.10.1 The term *underground* is intended to mean direct buried piping. For example, piping installed in trenches and tunnels but exposed should be treated as aboveground piping. Loop systems for yard piping are recommended for increased reliability and improved hydraulics. Loop systems should be sectionalized by placing valves at branches and at strategic locations to minimize the extent of impairments.

A.10.1.1 Copper tubing (Type K) with brazed joints conforming to Table 10.1.1 and Table 10.2.1(a) is acceptable for underground service. Listing and labeling information, along with applicable publications for reference, is as follows:

(1) *Listing and Labeling.* Testing laboratories list or label the following:
   (a) Cast-iron and ductile iron pipe (cement-lined and unlined, coated and uncoated)
   (b) Asbestos-cement pipe and couplings
   (c) Steel pipe
   (d) Copper pipe
   (e) Fiberglass filament-wound epoxy pipe and couplings

Copyright National Fire Protection Association
Provided by IHS under license with NFPA
No reproduction or networking permitted without license from IHS
Not for Resale

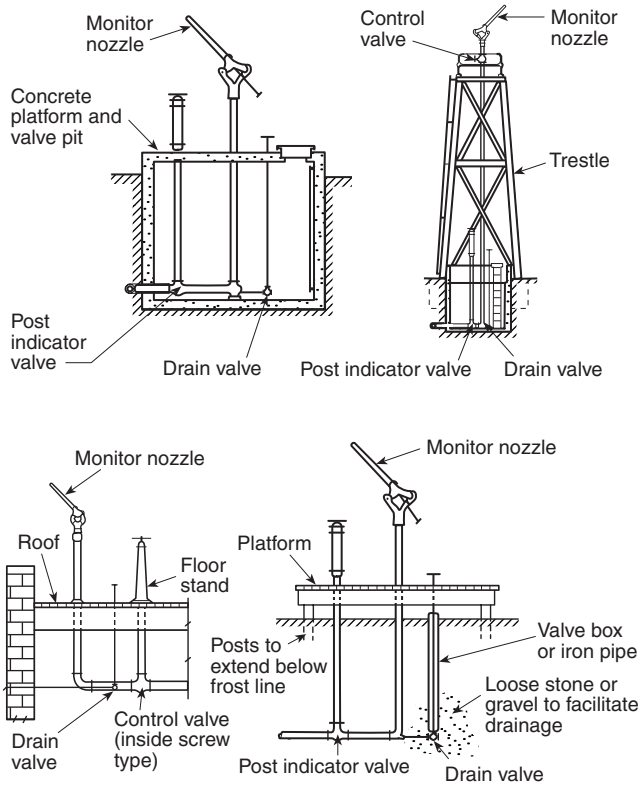

FIGURE A.9.1(a) Standard Monitor Nozzles.

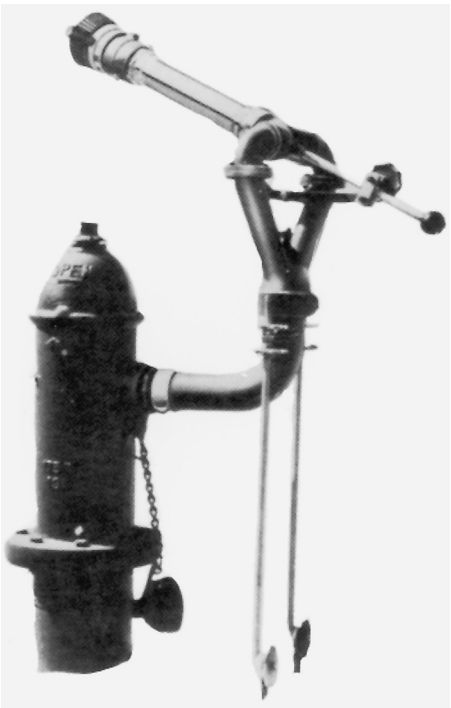

FIGURE A.9.1(b) Typical Hydrant-Mounted Monitor Nozzle.

(f) Polyethylene pipe
(g) Polyvinyl chloride (PVC) pipe and couplings
(h) Underwriters Laboratories Inc. lists, under re-examination service, reinforced concrete pipe (cylinder pipe, nonprestressed and prestressed)

(2) *Pipe Standards.* The various types of pipe are usually manufactured to one of the following standards:
(a) ASTM C296, *Standard Specification for Asbestos-Cement Pressure Pipe*
(b) AWWA C151, *Ductile Iron Pipe, Centrifugally Cast for Water*
(c) AWWA C300, *Reinforced Concrete Pressure Pipe, Steel-Cylinder Type, for Water and Other Liquids*
(d) AWWA C301, *Prestressed Concrete Pressure Pipe, Steel-Cylinder Type, for Water and Other Liquids*
(e) AWWA C302, *Reinforced Concrete Pressure Pipe, Non-Cylinder Type, for Water and Other Liquids*
(f) AWWA C303, *Reinforced Concrete Pressure Pipe, Steel-Cylinder Type, Pretensioned, for Water and Other Liquids*
(g) AWWA C400, *Standard for Asbestos-Cement Distribution Pipe, 4 in. Through 16 in., for Water and Other Liquids*
(h) AWWA C900, *Polyvinyl Chloride (PVC) Pressure Pipe, 4 in. Through 12 in., for Water and Other Liquids*

A.10.1.4 The following pipe design manuals can be used as guides:

(1) AWWA C150, *Thickness Design of Ductile Iron Pipe*
(2) AWWA C401, *Standard Practice for the Selection of Asbestos-Cement Water Pipe*
(3) AWWA M41, *Ductile Iron Pipe and Fittings*
(4) *Concrete Pipe Handbook*, American Concrete Pipe Association

A.10.1.6 The following standards apply to the application of coating and linings:

(1) AWWA C104, *Cement Mortar Lining for Ductile Iron Pipe and Fittings for Water*
(2) AWWA C105, *Polyethylene Encasement for Ductile Iron Pipe Systems*
(3) AWWA C203, *Coal-Tar Protective Coatings and Linings for Steel Water Pipelines Enamel and Tape — Hot Applied*
(4) AWWA C205, *Cement-Mortar Protective Lining and Coating for Steel Water Pipe 4 in. and Larger — Shop Applied*
(5) AWWA C602, *Cement-Mortar Lining of Water Pipe Lines 4 in. and Larger — in Place*
(6) AWWA C116, *Protective Fusion-Bonded Epoxy Coatings for the Interior and Exterior Surfaces of Ductile-Iron and Gray-Iron Fittings for Water Supply Service*

For internal diameters of cement-lined ductile iron pipe, see Table A.10.1.6.

A.10.2.4 The following standards apply to joints used with the various types of pipe:

(1) ASME B16.1, *Cast Iron Pipe Flanges and Flanged Fittings*
(2) AWWA C111, *Rubber-Gasket Joints for Ductile Iron Pressure Pipe and Fittings*
(3) AWWA C115, *Flanged Ductile Iron Pipe with Ductile Iron or Gray Iron Threaded Flanges*
(4) AWWA C206, *Field Welding of Steel Water Pipe*
(5) AWWA C606, *Grooved and Shouldered Joints*

Copyright National Fire Protection Association
Provided by IHS under license with NFPA
No reproduction or networking permitted without license from IHS
Not for Resale

Table A.10.1.6 ID for Cement-Lined Ductile Iron Pipe

Pipe Size (in.)	OD (in.)	Pressure Class	Thickness Class	Wall Thickness	Minimum Lining Thickness*	ID (in.) with Lining
3	3.96	350		0.25	1/16	3.34
3	3.96		51	0.25	1/16	3.34
3	3.96		52	0.28	1/16	3.28
3	3.96		53	0.31	1/16	3.22
3	3.96		54	0.34	1/16	3.16
3	3.96		55	0.37	1/16	3.10
3	3.96		56	0.40	1/16	3.04
4	4.80	350		0.25	1/16	4.18
4	4.80		51	0.26	1/16	4.16
4	4.80		52	0.29	1/16	4.10
4	4.80		53	0.32	1/16	4.04
4	4.80		54	0.35	1/16	3.98
4	4.80		55	0.38	1/16	3.92
4	4.80		56	0.41	1/16	3.86
6	6.90	350		0.25	1/16	6.28
6	6.90		50	0.25	1/16	6.28
6	6.90		51	0.28	1/16	6.22
6	6.90		52	0.31	1/16	6.16
6	6.90		53	0.34	1/16	6.10
6	6.90		54	0.37	1/16	6.04
6	6.90		55	0.40	1/16	5.98
6	6.90		56	0.43	1/16	5.92
8	9.05	350		0.25	1/16	8.43
8	9.05		50	0.27	1/16	8.39
8	9.05		51	0.30	1/16	8.33
8	9.05		52	0.33	1/16	8.27
8	9.05		53	0.36	1/16	8.21
8	9.05		54	0.39	1/16	8.15
8	9.05		55	0.42	1/16	8.09
8	9.05		56	0.45	1/16	8.03
10	11.10	350		0.26	1/16	10.46
10	11.10		50	0.29	1/16	10.40
10	11.10		51	0.32	1/16	10.34
10	11.10		52	0.35	1/16	10.28
10	11.10		53	0.38	1/16	10.22
10	11.10		54	0.41	1/16	10.16
10	11.10		55	0.44	1/16	10.10
10	11.10		56	0.47	1/16	10.04
12	13.20	350		0.28	1/16	12.52
12	13.20		50	0.31	1/16	12.46
12	13.20		51	0.34	1/16	12.40
12	13.20		52	0.37	1/16	12.34
12	13.20		53	0.40	1/16	12.28
12	13.20		54	0.43	1/16	12.22
12	13.20		55	0.46	1/16	12.16
12	13.20		56	0.49	1/16	12.10
14	15.30	250		0.28	3/32	14.55
14	15.30	300		0.30	3/32	14.51
14	15.30	350		0.31	3/32	14.49
14	15.30		50	0.33	3/32	14.45
14	15.30		51	0.36	3/32	14.39
14	15.30		52	0.39	3/32	14.33
14	15.30		53	0.42	3/32	14.27

Copyright National Fire Protection Association
Provided by IHS under license with NFPA
No reproduction or networking permitted without license from IHS
Not for Resale

Table A.10.1.6 *Continued*

Pipe Size (in.)	OD (in.)	Pressure Class	Thickness Class	Wall Thickness	Minimum Lining Thickness*	ID (in.) with Lining
14	15.30		54	0.45	3/32	14.21
14	15.30		55	0.48	3/32	14.15
14	15.30		56	0.51	3/32	14.09
16	17.40	250		0.30	3/32	16.61
16	17.40	300		0.32	3/32	16.57
16	17.40	350		0.34	3/32	16.53
16	17.40		50	0.34	3/32	16.53
16	17.40		51	0.37	3/32	16.47
16	17.40		52	0.40	3/32	16.41
16	17.40		53	0.43	3/32	16.35
16	17.40		54	0.46	3/32	16.29
16	17.40		55	0.49	3/32	16.23
16	17.40		56	0.52	3/32	16.17
18	19.50	250		0.31	3/32	18.69
18	19.50	300		0.34	3/32	18.63
18	19.50	350		0.36	3/32	18.59
18	19.50		50	0.35	3/32	18.61
18	19.50		51	0.35	3/32	18.61
18	19.50		52	0.41	3/32	18.49
18	19.50		53	0.44	3/32	18.43
18	19.50		54	0.47	3/32	18.37
18	19.50		55	0.50	3/32	18.31
18	19.50		56	0.53	3/32	18.25
20	21.60	250		0.33	3/32	20.75
20	21.60	300		0.36	3/32	20.69
20	21.60	350		0.38	3/32	20.65
20	21.60		50	0.36	3/32	20.69
20	21.60		51	0.39	3/32	20.63
20	21.60		52	0.42	3/32	20.57
20	21.60		53	0.45	3/32	20.51
20	21.60		54	0.48	3/32	20.45
20	21.60		55	0.51	3/32	20.39
20	21.60		56	0.54	3/32	20.33
24	25.80	200		0.33	3/32	24.95
24	25.80	250		0.37	3/32	24.87
24	25.80	300		0.40	3/32	24.81
24	25.80	350		0.43	3/32	24.75
24	25.80		50	0.38	3/32	24.85
24	25.80		51	0.41	3/32	24.79
24	25.80		52	0.44	3/32	24.73
24	25.80		53	0.47	3/32	24.67
24	25.80		54	0.50	3/32	24.61
24	25.80		55	0.53	3/32	24.55
24	25.80		56	0.56	3/32	24.49

*Note: This table is appropriate for single lining thickness only. The actual lining thickness should be obtained from the manufacturer.

A.10.2.5 Fittings generally used are cast iron with joints made to the specifications of the manufacturer of the particular type of pipe *(see the standards listed in A.10.2.4)*. Steel fittings also have some applications. The following standards apply to fittings:

(1) ASME B16.1, *Cast Iron Pipe Flanges and Flanged Fittings*
(2) AWWA C110, *Ductile Iron and Gray Iron Fittings, 3-in. Through 48-in., for Water and Other Liquids*
(3) AWWA C153, *Ductile Iron Compact Fittings, 3 in. through 24 in. and 54 in. through 64 in. for Water Service*
(4) AWWA C208, *Dimensions for Fabricated Steel Water Pipe Fittings*

A.10.4.1 The following documents apply to the installation of pipe and fittings:

(1) AWWA C603, *Standard for the Installation of Asbestos-Cement Water Pipe*

Copyright National Fire Protection Association
Provided by IHS under license with NFPA
No reproduction or networking permitted without license from IHS
Not for Resale

(2) AWWA C600, *Standard for the Installation of Ductile-Iron Water Mains and Their Appurtenances*
(3) AWWA M11, *A Guide for Steel Pipe Design and Installation*
(4) AWWA M41, *Ductile Iron Pipe and Fittings*
(5) *Concrete Pipe Handbook*, American Concrete Pipe Association
(6) *Handbook of PVC Pipe*, Uni-Bell PVC Pipe Association
(7) *Installation Guide for Ductile Iron Pipe*, Ductile Iron Pipe Research Association
(8) *Thrust Restraint Design for Ductile Iron Pipe*, Ductile Iron Pipe Research Association

As there is normally no circulation of water in private fire mains, they require greater depth of covering than do public mains. Greater depth is required in a loose gravelly soil (or in rock) than in compact soil containing large quantities of clay. The recommended depth of cover above the top of underground yard mains is shown in Figure A.10.4.1.

A.10.5.1 In determining the need to protect aboveground piping from freezing, the lowest mean temperature should be considered, as shown in Figure A.10.5.1.

A.10.6.7 Gray cast iron is not considered galvanically dissimilar to ductile iron. Rubber gasket joints (unrestrained push-on or mechanical joints) are not considered connected electrically. Metal thickness should not be considered a protection against corrosive environments. In the case of cast-iron or ductile iron pipe for soil evaluation and external protection systems, see Appendix A of AWWA C105.

A.10.6.8 Where lightning protection is provided for a structure, NFPA 780, 4.14 requires that all grounding media including underground metallic piping systems be interconnected to provide a common ground potential. These underground piping systems are not permitted to be substituted for grounding electrodes but must be bonded to the lightning protection grounding system. Where galvanic corrosion is of concern, this bond may be made via a spark gap or gas discharge tube.

A.10.8.1.1 It is a fundamental design principle of fluid mechanics that dynamic and static pressures, acting at changes in size or direction of a pipe, produce unbalanced thrust forces at locations such as bends, tees, wyes, dead ends, and reducer offsets. This design principle includes consideration of lateral soil pressure and pipe/soil friction, variables that can be reliably determined using current soil engineering knowledge. Refer to A.10.8.3 for a list of references for use in calculating and determining joint restraint systems.

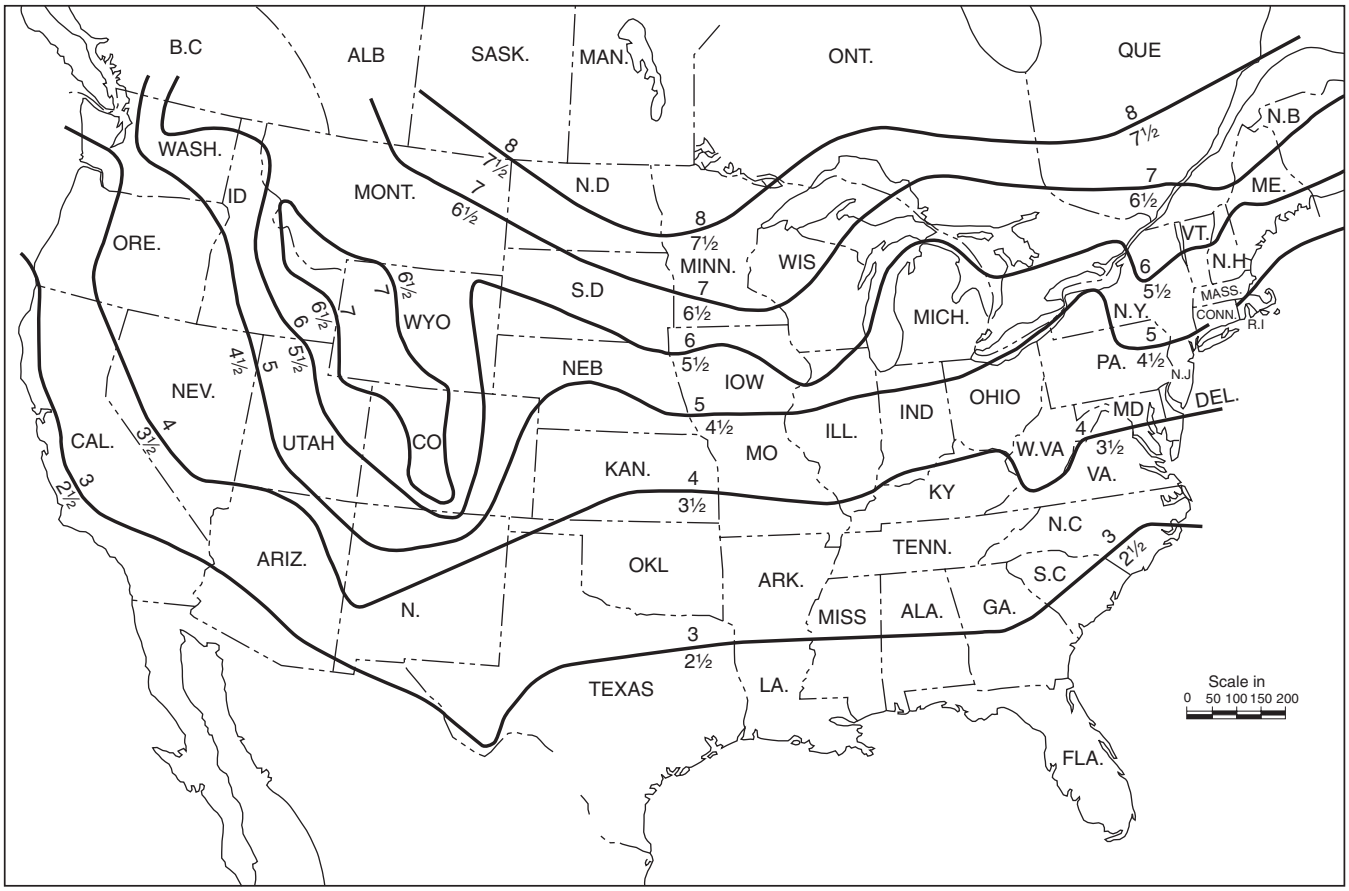

Notes:
1. For SI Units, 1 in. = 25.4 mm; 1 ft = 0.304 m.
2. Where frost penetration is a factor, the depth of cover shown averages 6 in. greater than that usually provided by the municipal waterworks. Greater depth is needed because of the absence of flow in yard mains.

FIGURE A.10.4.1 Recommended Depth of Cover (in feet) Above Top of Underground Yard Mains.

Copyright National Fire Protection Association
Provided by IHS under license with NFPA
No reproduction or networking permitted without license from IHS
Not for Resale

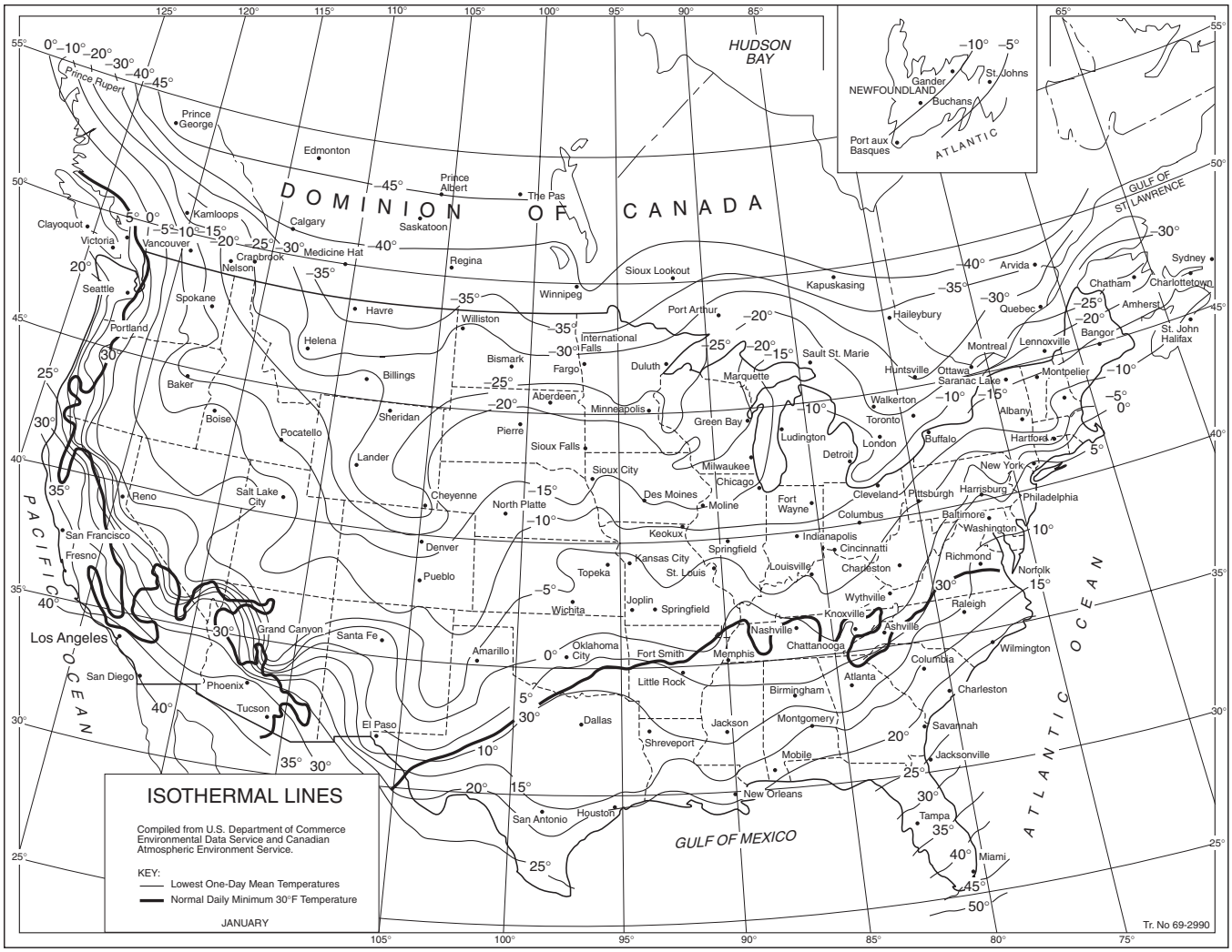

Source: Compiled from United States Weather Bureau records.
For SI units, °C = ⅝ (°F −32); 1 mi = 1.609 km.

FIGURE A.10.5.1 Isothermal Lines — Lowest One-Day Mean Temperature (°F).

Except for the case of welded joints and approved special restrained joints, such as is provided by approved mechanical joint retainer glands or locked mechanical and push-on joints, the usual joints for underground pipe are expected to be held in place by the soil in which the pipe is buried. Gasketed push-on and mechanical joints without special locking devices have limited ability to resist separation due to movement of the pipe.

A.10.8.2 Thrust Blocks. Concrete thrust blocks are one of the methods of restraint now in use, provided that stable soil conditions prevail and space requirements permit placement. Successful blocking is dependent upon factors such as location, availability and placement of concrete, and possibility of disturbance by future excavations.

Resistance is provided by transferring the thrust force to the soil through the larger bearing area of the block such that the resultant pressure against the soil does not exceed the horizontal bearing strength of the soil. The design of thrust blocks consists of determining the appropriate bearing area of the block for a particular set of conditions. The parameters involved in the design include pipe size, design pressure, angle of the bend (or configuration of the fitting involved), and the horizontal bearing strength of the soil.

Table A.10.8.2(a) gives the nominal thrust at fittings for various sizes of ductile iron and PVC piping. Figure A.10.8.2(a) shows an example of how thrust forces act on a piping bend.

Thrust blocks are generally categorized into two groups — bearing and gravity blocks. Figure A.10.8.2(b) depicts a typical bearing thrust block on a horizontal bend.

The following are general criteria for bearing block design:

(1) The bearing surface should, where possible, be placed against undisturbed soil.
(2) Where it is not possible to place the bearing surface against undisturbed soil, the fill between the bearing surface and undisturbed soil must be compacted to at least 90 percent Standard Proctor density.
(3) Block height (h) should be equal to or less than one-half the total depth to the bottom of the block (H_t) but not less than the pipe diameter (D).

Copyright National Fire Protection Association
Provided by IHS under license with NFPA
No reproduction or networking permitted without license from IHS
Not for Resale

Table A.10.8.2(a) Thrust at Fittings at 100 psi (6.9 bar) Water Pressure for Ductile Iron and PVC Pipe

Nominal Pipe Diameter (in.)	Total Pounds					
	Dead End	90 Degree Bend	45 Degree Bend	22½ Degree Bend	11¼ Degree Bend	5⅛ Degree Bend
4	1,810	2,559	1,385	706	355	162
6	3,739	5,288	2,862	1,459	733	334
8	6,433	9,097	4,923	2,510	1,261	575
10	9,677	13,685	7,406	3,776	1,897	865
12	13,685	19,353	10,474	5,340	2,683	1,224
14	18,385	26,001	14,072	7,174	3,604	1,644
16	23,779	33,628	18,199	9,278	4,661	2,126
18	29,865	42,235	22,858	11,653	5,855	2,670
20	36,644	51,822	28,046	14,298	7,183	3,277
24	52,279	73,934	40,013	20,398	10,249	4,675
30	80,425	113,738	61,554	31,380	15,766	7,191
36	115,209	162,931	88,177	44,952	22,585	10,302
42	155,528	219,950	119,036	60,684	30,489	13,907
48	202,683	286,637	155,127	79,083	39,733	18,124

Notes:
(1) For SI units, 1 lb = 0.454 kg.
(2) To determine thrust at pressure other than 100 psi (6.9 bar), multiply the thrust obtained in the table by the ratio of the pressure to 100 psi (6.9 bar). For example, the thrust on a 12 in., 90 degree bend at 125 psi (8.6 bar) is 19,353 × 125/100 = 24,191 lb.

Table A.10.8.2(b) Horizontal Bearing Strengths

Soil	Bearing Strength (S_b)	
	lb/ft^2	kN/m^2
Muck	0	0
Soft clay	1000	47.9
Silt	1500	71.8
Sandy silt	3000	143.6
Sand	4000	191.5
Sand clay	6000	287.3
Hard clay	9000	430.9

Note: Although the bearing strength values in this table have been used successfully in the design of thrust blocks and are considered to be conservative, their accuracy is totally dependent on accurate soil identification and evaluation. The ultimate responsibility for selecting the proper bearing strength of a particular soil type must rest with the design engineer.

(4) Block height (h) should be chosen such that the calculated block width (b) varies between one and two times the height.
(5) Gravity thrust blocks can be used to resist thrust at vertical down bends. In a gravity thrust block, the weight of the block is the force providing equilibrium with the thrust force. The design problem is then to calculate the required volume of the thrust block of a known density. The vertical component of the thrust force in Figure A.10.8.2(c) is balanced by the weight of the block. For required horizontal bearing block areas, see Table A.10.8.2(c).

The required block area (A_b) is as follows:

$$A_b = (h)(b) = \frac{T(S_f)}{S_b}$$

where:
A_b = required block area (ft^2)
h = block height (ft)
b = calculated block width (ft)
T = thrust force (lbf)
S_f = safety factor (usually 1.5)
S_b = bearing strength (lb/ft^2)

Then, for a horizontal bend, the following formula is used:

$$b = \frac{2(S_f)(P)(A)\sin\left(\frac{\theta}{2}\right)}{(h)(S_b)}$$

where:
b = calculated block width (ft)
S_f = safety factor (usually 1.5 for thrust block design)
P = water pressure ($lb/in.^2$)
A = cross-sectional area of the pipe based on outside diameter
h = block height (ft)
S_b = horizontal bearing strength of the soil (lb/ft^2) ($in.^2$)

A similar approach can be used to design bearing blocks to resist the thrust forces at locations such as tees and dead ends. Typical values for conservative horizontal bearing strengths of various soil types are listed in Table A.10.8.2(b).

In lieu of the values for soil bearing strength shown in Table A.10.8.2(b), a designer might choose to use calculated Rankine passive pressure (P_p) or other determination of soil bearing strength based on actual soil properties.

Copyright National Fire Protection Association
Provided by IHS under license with NFPA
No reproduction or networking permitted without license from IHS
Not for Resale

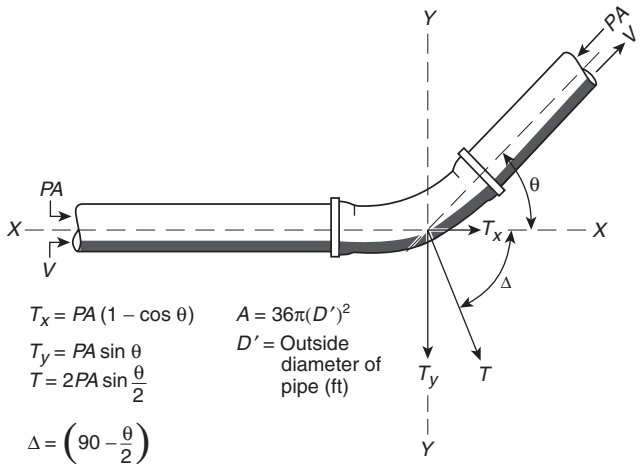

T = Thrust force resulting from change in direction of flow (lbf)
T_x = Component of the thrust force acting parallel to the original direction of flow (lbf)
T_y = Component of the thrust force acting perpendicular to the original direction of flow (lbf)
P = Water pressure (psi²)
A = Cross-sectional area of the pipe based on outside diameter (in.²)
V = Velocity in direction of flow

FIGURE A.10.8.2(a) Thrust Forces Acting on a Bend.

It can be easily shown that $T_y = PA \sin\theta$. The required volume of the block is as follows:

$$V_g = \frac{S_f PA \sin\theta}{W_m}$$

where:
V_g = block volume (ft³)
S_f = safety factor
P = water pressure (psi)
A = cross-sectional area of the pipe interior
W_m = density of the block material (lb/ft³)

In a case such as the one shown, the horizontal component of thrust force is calculated as follows:

$$T_x = PA(1 - \cos\theta)$$

where:
T_x = horizontal component of the thrust force
P = water pressure (psi)
A = cross-sectional area of the pipe interior

The horizontal component of thrust force must be resisted by the bearing of the right side of the block against the soil. Analysis of this aspect follows the same principles as the previous section on bearing blocks.

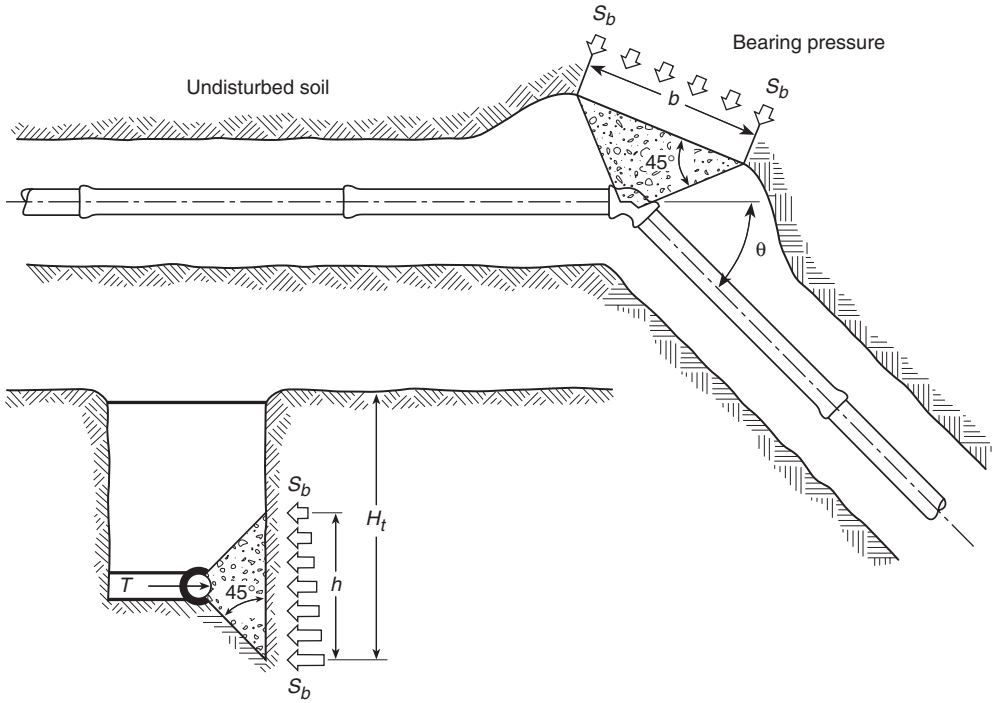

T = thrust force resulting from the change in direction of flow
S_b = horizontal bearing strength of the soil
h = block height
H_t = total depth to bottom of block

FIGURE A.10.8.2(b) Bearing Thrust Block.

Copyright National Fire Protection Association
Provided by IHS under license with NFPA
No reproduction or networking permitted without license from IHS
Not for Resale

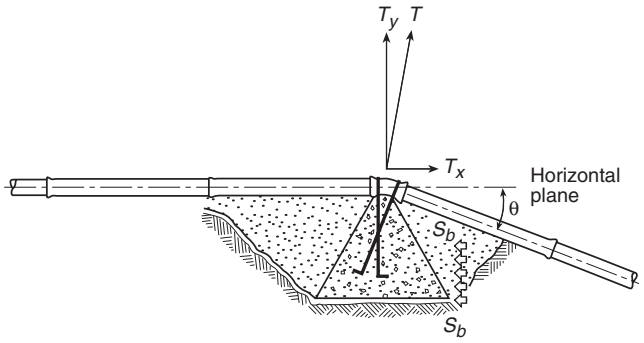

T = thrust force resulting from the change of direction of flow
T_x = horizontal component of the thrust force
T_y = vertical component of the thrust force
S_b = horizontal bearing strength of the soil

FIGURE A.10.8.2(c) Gravity Thrust Block.

A.10.8.3 Restrained Joint Systems. A method for providing thrust restraint is the use of restrained joints. A restrained joint is a special type of joint that is designed to provide longitudinal restraint. Restrained joint systems function in a manner similar to that of thrust blocks, insofar as the reaction of the entire restrained unit of piping with the soil balances the thrust forces.

The objective in designing a restrained joint thrust restraint system is to determine the length of pipe that must be restrained on each side of the focus of the thrust force. This will be a function of the pipe size, the internal pressure, the depth of cover, and the characteristics of the solid surrounding the pipe.

The following documents apply to the design, calculation, and determination of restrained joint systems:

(1) *Thrust Restraint Design for Ductile Iron Pipe*, Ductile Iron Pipe Research Association
(2) AWWA M41, *Ductile Iron Pipe and Fittings*
(3) AWWA M9, *Concrete Pressure Pipe*
(4) AWWA M11, *Steel Pipe — A Guide for Design and Installation*
(5) *Thrust Restraint Design Equations and Tables for Ductile Iron and PVC Pipe*, EBAA Iron, Inc.

Figure A.10.8.3 shows an example of a typical connection to a fire protection system riser utilizing restrained joint pipe.

Table A.10.8.2(c) Required Horizontal Bearing Block Area

Nominal Pipe Diameter (in.)	Bearing Block Area (ft^2)	Nominal Pipe Diameter (in.)	Bearing Block Area (ft^2)	Nominal Pipe Diameter (in.)	Bearing Block Area (ft^2)
3	2.6	12	29.0	24	110.9
4	3.8	14	39.0	30	170.6
6	7.9	16	50.4	36	244.4
8	13.6	18	63.3	42	329.9
10	20.5	20	77.7	48	430.0

Notes:
(1) Although the bearing strength values in this table have been used successfully in the design of thrust blocks and are considered to be conservative, their accuracy is totally dependent on accurate soil identification and evaluation. The ultimate responsibility for selecting the proper bearing strength of a particular soil type must rest with the design engineer.
(2) Values listed are based on a 90 degree horizontal bend, an internal pressure of 100 psi, a soil horizontal bearing strength of 1,000 lb/ft^2, a safety factor of 1.5, and ductile-iron pipe outside diameters.
(a) For other horizontal bends, multiply by the following coefficients: 45 degree: 0.414; 22½ degree: 0.199; 11¼ degree: 0.098
(b) For other internal pressures, multiply by ratio to 100 psi.
(c) For other soil horizontal bearing strengths, divide by ratio to 1,000 lb/ft^2.
(d) For other safety factors, multiply by ratio to 1.5.
Example: Using Table A.10.8.2(c), find the horizontal bearing block area for a 6 in. diameter, 45 degree bend with an internal pressure of 150 psi. The soil bearing strength is 3,000 lb/ft^2, and the safety factor is 1.5.

From Table A.10.8.2(c), the required bearing block area for a 6 in. diameter, 90 degree bend with an internal pressure of 100 psi and a soil horizontal bearing strength of 1,000 psi is 7.9 ft^2.

For our problem:

$$Area = \frac{7.9\ ft^2\,(0.414)\left(\frac{150}{100}\right)}{\left(\frac{3{,}000}{1{,}000}\right)} = 1.64\ ft^2$$

Copyright National Fire Protection Association
Provided by IHS under license with NFPA
No reproduction or networking permitted without license from IHS
Not for Resale

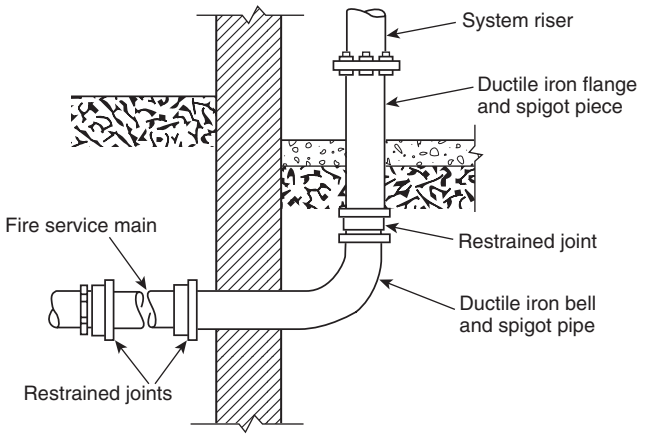

FIGURE A.10.8.3 Typical Connection to a Fire Protection System Riser Illustrating Restrained Joints.

A.10.8.3.5 Examples of materials and the standards covering these materials are as follows:

(1) Clamps, steel *(see discussion on steel in the following paragraph)*
(2) Rods, steel *(see discussion on steel in the following paragraph)*
(3) Bolts, steel (ASTM A 307)
(4) Washers, steel *(see discussion on steel in the following paragraph)*; cast iron (Class A cast iron as defined by ASTM A 126)
(5) Anchor straps and plug straps, steel *(see discussion on steel in the following paragraph)*
(6) Rod couplings or turnbuckles, malleable iron (ASTM A 197)

Steel of modified range merchant quality as defined in U.S. Federal Standard No. 66C, April 18, 1967, change notice No. 2, April 16, 1970, as promulgated by the U.S. Federal Government General Services Administration.

The materials specified in A.10.8.3.5(1) through (6) do not preclude the use of other materials that also satisfy the requirements of this section.

A.10.10.2.1 Underground mains and lead-in connections to system risers should be flushed through hydrants at dead ends of the system or through accessible aboveground flushing outlets allowing the water to run until clear. Figure A.10.10.2.1 shows acceptable examples of flushing the system. If water is supplied from more than one source or from a looped system, divisional valves should be closed to produce a high-velocity flow through each single line. The flows specified in Table 10.10.2.1.3 will produce a velocity of at least 10 ft/sec (3 m/sec), which is necessary for cleaning the pipe and for lifting foreign material to an aboveground flushing outlet.

A.10.10.2.2.1 A sprinkler system has for its water supply a connection to a public water service main. A 100 psi (6.9 bar) rated pump is installed in the connection. With a maximum normal public water supply of 70 psi (4.8 bar) at the low elevation point of the individual system or portion of the system being tested and a 120 psi (8.3 bar) pump (churn) pressure, the hydrostatic test pressure is 70 psi + 120 psi + 50 psi or 240 psi (16.5 bar).

To reduce the possibility of serious water damage in case of a break, pressure can be maintained by a small pump, the main controlling gate meanwhile being kept shut during the test.

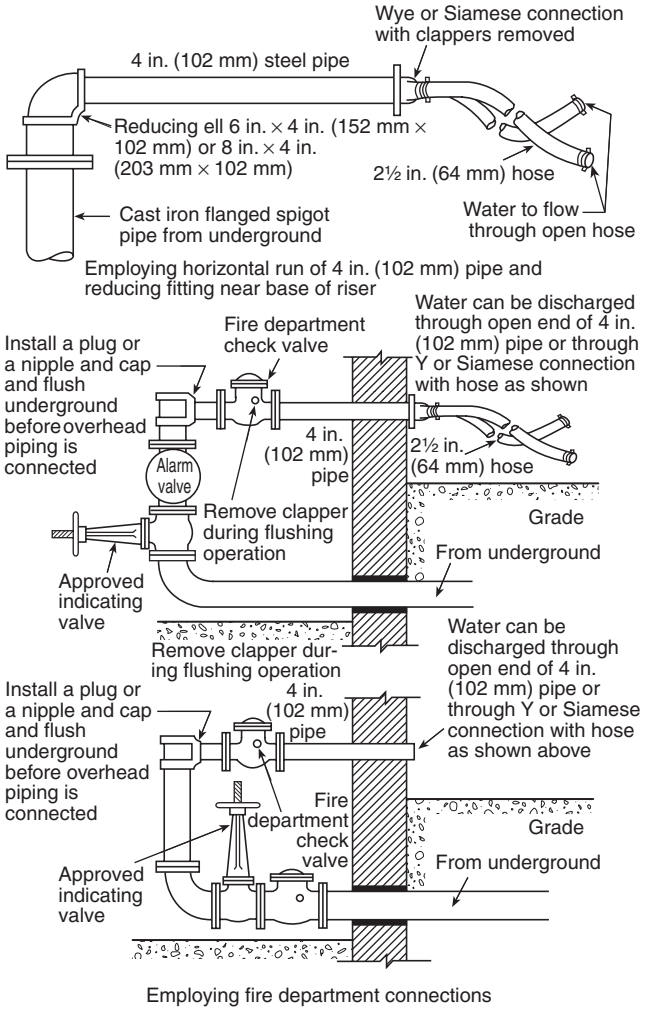

FIGURE A.10.10.2.1 Methods of Flushing Water Supply Connections.

Polybutylene pipe will undergo expansion during initial pressurization. In this case, a reduction in gauge pressure might not necessarily indicate a leak. The pressure reduction should not exceed the manufacturer's specifications and listing criteria.

When systems having rigid thermoplastic piping such as CPVC are pressure tested, the sprinkler system should be filled with water. The air should be bled from the highest and farthest sprinklers. Compressed air or compressed gas should never be used to test systems with rigid thermoplastic pipe.

A recommended test procedure is as follows: The water pressure is to be increased in 50 psi (3.4 bar) increments until the test pressure described in 10.10.2.2.1 is attained. After each increase in pressure, observations are to be made of the stability of the joints. These observations are to include such items as protrusion or extrusion of the gasket, leakage, or other factors likely to affect the continued use of a pipe in service. During the test, the pressure is not to be increased by the next increment until the joint has become stable. This applies particularly to movement of the gasket. After the pressure has been increased to the required maximum value and held for 1 hour, the pressure is to be decreased to 0 psi while

Copyright National Fire Protection Association
Provided by IHS under license with NFPA
No reproduction or networking permitted without license from IHS
Not for Resale

observations are made for leakage. The pressure is again to be slowly increased to the value specified in 10.10.2.2.1 and held for 1 more hour while observations are made for leakage and the leakage measurement is made.

A.10.10.2.2.4 One acceptable means of completing this test is to utilize a pressure pump that draws its water supply from a full container. At the completion of the 2 hour test, the amount of water to refill the container can be measured to determine the amount of makeup water. In order to minimize pressure loss, the piping should be flushed to remove any trapped air. Additionally, the piping should be pressurized for 1 day prior to the hydrostatic test to account for expansion, absorption, entrapped air, and so on.

The use of a blind flange or skillet is preferred for use when hydrostatically testing segments of new work. Metal-seated valves are susceptible to developing slight imperfections during transport, installation, and operation and thus can be likely to leak more than 1 fl oz (30 ml) per inch of valve diameter per hour. For this reason, the blind flange should be used when hydrostatically testing.

A.10.10.2.6 Hydrostatic tests should be made before the joints are covered so that any leaks can be readily detected. Thrust blocks should be sufficiently hardened before hydrostatic testing is begun. If the joints are covered with backfill prior to testing, the contractor remains responsible for locating and correcting any leakage in excess of that permitted.

A.11.1 When calculating the actual inside diameter of cement-mortar lined pipe, twice the thickness of the pipe wall and twice the thickness of the lining needs to be subtracted from the outside diameter of the pipe. The actual lining thickness should be obtained from the manufacturer.

Table A.11.1(a) and Table A.11.1(b) indicate the minimum lining thickness.

Table A.11.1(a) Table for Minimum Thickness of Lining for Ductile-Iron Pipe and Fittings

Pipe and Fitting Size		Thickness of Lining	
in.	mm	in.	mm
3–12	76–305	1/16	1.6
14–24	356–610	3/32	2.4
30–64	762–1600	1/8	3.2

Source: AWWA C104.

Table A.11.1(b) Table for Minimum Thickness of Lining for Steel Pipe

Nominal Pipe Size		Thickness of Lining		Tolerance	
in.	mm	in.	mm	in.	mm
4–10	100–250	1/4	6	−1/16, +1/8	−1.6, +3.2
11–23	280–580	5/16	8	−1/16, +1/8	−1.6, +3.2
24–36	600–900	3/8	10	−1/16, +1/8	−1.6, +3.2
>36	>900	1/2	13	−1/16, +3/16	−1.6, +4.8

Source: AWWA C205.

Annex B Valve Supervision Issues

This annex is not a part of the requirements of this NFPA document but is included for informational purposes only.

B.1 Responsibility. The management is responsible for the supervision of valves controlling the water supply for fire protection and should exert every effort to see that the valves are maintained in the normally open position. This effort includes special precautions to ensure that protection is promptly restored by completely opening valves that are necessarily closed during repairs or alterations. The precautions apply equally to the following:

(1) Valves controlling sprinklers and other fixed water-based fire suppression systems
(2) Hydrants
(3) Tanks
(4) Standpipes
(5) Pumps
(6) Street connections
(7) Sectional valves

Central station supervisory service systems or proprietary supervisory service systems, or a combination of these methods of valve supervision, as described in the following paragraphs, are considered essential to ensure that the valves controlling fire protection systems are in the normally open position. The methods described are intended as an aid to the person responsible for developing a systematic method of determining that the valves controlling sprinkler systems and other fire protection devices are open.

Continual vigilance is necessary if valves are to be kept in the open position. Responsible day and night employees should be familiar with the location of all valves and their proper use.

The authority having jurisdiction should be consulted as to the type of valve supervision required. Contracts for equipment should specify that all details are to be subject to the approval of the authority having jurisdiction.

B.2 Central Station Supervisory Service Systems. Central station supervisory service systems involve complete, constant, and automatic supervision of valves by electrically operated devices and circuits. The devices and circuits are continually under test and operate through an approved outside central station in compliance with *NFPA 72*. It is understood that only the portions of *NFPA 72* that relate to valve supervision should apply.

B.3 Proprietary Supervisory Service Systems. Proprietary supervisory service systems include systems in which the operation of a valve produces some form of signal and record at a common point by electrically operated devices and circuits. The device and circuits are continually under test and operate through a central supervising station at the protected property in compliance with the standards for the installation, maintenance, and use of local protective, auxiliary protective, remote-station protective, and proprietary signaling systems. It is understood that only the portions of the standards that relate to valve supervision should apply.

B.4 Locking and Sealing. The standard method of locking, sealing, and tagging valves to prevent, as far as possible, their unnecessary closing, to obtain notification of such closing, and to aid in restoring the valve to normal condition is a satisfactory alternative to valve supervision. The authority having jurisdiction should be consulted for details for specific cases.

--`,,```,,,,````-`-`,,`,,`,`,,`---

Copyright National Fire Protection Association
Provided by IHS under license with NFPA
No reproduction or networking permitted without license from IHS
Not for Resale

Where electrical supervision is not provided, locks or seals should be provided on all valves and should be of a type acceptable to the authority having jurisdiction.

Seals can be marked to indicate the organization under whose jurisdiction the sealing is conducted. All seals should be attached to the valve in such a manner that the valves cannot be operated without breaking the seals. Seals should be of a character that prevents injury in handling and that prevents reassembly when broken. Where seals are used, valves should be inspected weekly. The authority having jurisdiction can require a valve tag to be used in conjunction with the sealing.

A padlock, with a chain where necessary, is especially desirable to prevent unauthorized closing of valves in areas where valves are subject to tampering. Where such locks are employed, valves should be inspected monthly.

If valves are locked, any distribution of keys should be restricted to only those directly responsible for the fire protection system. Multiple valves should not be locked together; they should be individually locked.

The individual performing inspections should determine that each valve is in the normal position and properly locked or sealed, and so noted on an appropriate record form while still at the valve. The authority having jurisdiction should be consulted for assistance in preparing a suitable report form for this activity.

Identification signs should be provided at each valve to indicate its function and what it controls.

The position of the spindle of OS&Y valves or the target on the indicator valves cannot be accepted as conclusive proof that the valve is fully open. The opening of the valve should be followed by a test to determine that the operating parts have functioned properly.

The test consists of opening the main drain valve and allowing a free flow of water until the gauge reading becomes stationary. If the pressure drop is excessive for the water supply involved, the cause should be determined immediately and the proper remedies taken. Where sectional valves or other special conditions are encountered, other methods of testing should be used.

If it becomes necessary to break a seal for emergency reasons, the valve, following the emergency, should be opened by the individual responsible for the fire protection of the plant or his or her designated representative. The responsible individual should apply a seal at the time of the valve opening. The seal should be maintained in place until such time as the authority having jurisdiction can replace it with a seal of its own.

Seals or locks should not be applied to valves that have been reopened after closure until such time as the inspection procedure is carried out.

Where water is shut off to the sprinkler or other fixed water-based fire suppression systems, a guard or other qualified person should be placed on duty and required to continuously patrol the affected sections of the premises until such time as protection is restored.

During specific critical situations, a responsible individual should be stationed at the valve so that the valve can be reopened promptly if necessary. It is the intent of this recommendation that the individual remain within sight of the valve and have no additional duties. This recommendation is considered imperative when fire protection is shut off immediately following a fire.

An inspection of all other fire protection equipment should be made prior to shutting off water in order to ensure that it is in operative condition.

Where changes to fire protection equipment are to be made, as much work as possible should be done in advance of shutting off the water, so that final connections can be made quickly and protection restored promptly. With careful planning, open outlets often can be plugged and protection can be restored on a portion of the equipment while the alterations are being made.

Where changes are to be made in underground piping, as much piping as possible should be laid before shutting off the water for final connections. Where possible, temporary feed lines, such as temporary piping for reconnection of risers by hose lines, should be used to afford maximum protection. The plant, public fire department, and other authorities having jurisdiction should be notified of all impairments to fire protection equipment.

Annex C Recommended Practice for Fire Flow Testing

This annex is not a part of the requirements of this NFPA document but is included for informational purposes only.

C.1 Annex C was developed based upon the procedures contained in NFPA 291. For additional information on fire flow testing, see NFPA 291, Chapter 4, Flow Testing.

C.1.1 Scope. The scope of this annex is to provide guidance on fire flow testing of hydrants.

C.1.2 Purpose. Fire flow tests are conducted on water distribution systems to determine the rate of flow available at various locations for fire-fighting purposes.

C.1.3 Application.

C.1.3.1 A certain residual pressure in the mains is specified at which the rate of flow should be available.

C.1.3.2 Additional benefit is derived from fire flow tests by the indication of possible deficiencies, such as tuberculation of piping or closed valves or both, which could be corrected to ensure adequate fire flows as needed.

C.1.4 Units. Metric units of measurement in this recommended practice are in accordance with the modernized metric system known as the International System of Units (SI). Two units (liter and bar), outside of but recognized by SI, are commonly used in international fire protection. These units are listed in Table C.1.4 with conversion factors.

Table C.1.4 SI Units and Conversion Factors

Unit Name	Unit Symbol	Conversion Factor
Liter	L	1 gal = 3.785 L
Liter per minute per square meter	$(L/min)/m^2$	1 gpm ft^2 = $(40.746\ L/min)/m^2$
Cubic decimeter	dm^3	1 gal = 3.785 dm^3
Pascal	Pa	1 psi = 6894.757 Pa
Bar	bar	1 psi = 0.0689 bar
Bar	bar	1 bar = 10^5 Pa

Note: For additional conversions and information, see IEEE/ASTM-SI-10.

Copyright National Fire Protection Association
Provided by IHS under license with NFPA
No reproduction or networking permitted without license from IHS
Not for Resale

C.1.4.1 If a value for measurement as given in this recommended practice is followed by an equivalent value in other units, the first value stated is to be regarded as the recommendation. A given equivalent value might be approximate.

C.2 Referenced Publications.

C.2.1 The documents or portions thereof listed in this chapter are referenced within this annex and should be considered part of the recommendations of this document.

C.2.2 NFPA Publications. (Reserved)

C.2.3 Other Publications.

C.2.3.1 ASTM Publications. ASTM International, 100 Barr Harbor Drive, P.O. Box C700, West Conshohocken, PA 19428-2959.

IEEE/ASTM-SI-10, *Standard for Use of the International System of Units (SI): The Modern Metric System*, 1992.

C.3 Definitions.

C.3.1 The definitions contained in this annex apply to the terms used in this annex practice. Where terms are not included, common usage of the terms applies.

C.3.2 NFPA Official Definitions.

C.3.2.1 Authority Having Jurisdiction (AHJ). An organization, office, or individual responsible for enforcing the requirements of a code or standard, or for approving equipment, materials, an installation, or a procedure. *(See A.3.2.2.)*

C.3.2.2 Listed. Equipment, materials, or services included in a list published by an organization that is acceptable to the authority having jurisdiction and concerned with evaluation of products or services, that maintains periodic inspection of production of listed equipment or materials or periodic evaluation of services, and whose listing states that either the equipment, material, or service meets appropriate designated standards or has been tested and found suitable for a specified purpose. *(See A.3.2.4.)*

C.3.2.3 Should. Indicates a recommendation or that which is advised but not required.

C.3.3 General Definitions.

C.3.3.1 Rated Capacity. The flow available from a hydrant at the designated residual pressure (rated pressure) either measured or calculated.

C.3.3.2 Residual Pressure. The pressure that exists in the distribution system, measured at the residual hydrant at the time the flow readings are taken at the flow hydrants.

C.3.3.3 Static Pressure. The pressure that exists at a given point under normal distribution system conditions measured at the residual hydrant with no hydrants flowing.

C.4 Flow Testing.

C.4.1 Rating Pressure.

C.4.1.1 For the purpose of uniform marking of fire hydrants, the ratings should be based on a residual pressure of 20 psi (1.4 bar) for all hydrants having a static pressure in excess of 40 psi (2.8 bar).

C.4.1.2 Hydrants having a static pressure of less than 40 psi (2.8 bar) should be rated at one-half of the static pressure.

C.4.1.3 It is generally recommended that a minimum residual pressure of 20 psi (1.4 bar) should be maintained at hydrants when delivering the fire flow. Fire department pumpers can be operated where hydrant pressures are less, but with difficulty.

C.4.1.4 Where hydrants are well distributed and of the proper size and type (so that friction losses in the hydrant and suction line are not excessive), it might be possible to set a lesser pressure as the minimum pressure.

C.4.1.5 A primary concern should be the ability to maintain sufficient residual pressure to prevent developing a negative pressure at any point in the street mains, which could result in the collapse of the mains or other water system components or back-siphonage of polluted water from some other interconnected source.

C.4.1.6 It should be noted that the use of residual pressures of less than 20 psi (1.4 bar) is not permitted by many state health departments.

C.4.2 Test Procedure.

C.4.2.1 Tests should be made during a period of ordinary demand.

C.4.2.2 The procedure consists of discharging water at a measured rate of flow from the system at a given location and observing the corresponding pressure drop in the mains.

C.4.3 Test Layout.

C.4.3.1 After the location where the test is to be run has been determined, a group of test hydrants in the vicinity is selected.

C.4.3.2 Once selected, due consideration should be given to potential interference with traffic flow patterns, damage to surroundings (e.g., roadways, sidewalks, landscapes, vehicles, and pedestrians), and potential flooding problems both local and remote from the test site.

C.4.3.3 One hydrant, designated the residual hydrant, is chosen to be the hydrant where the normal static pressure will be observed with the other hydrants in the group closed, and where the residual pressure will be observed with the other hydrants flowing.

C.4.3.4 This hydrant is chosen so it will be located between the hydrant to be flowed and the large mains that constitute the immediate sources of water supply in the area. In Figure C.4.3.4, test layouts are indicated showing the residual hydrant designated with the letter R and hydrants to be flowed with the letter F.

C.4.3.5 The number of hydrants to be used in any test depends upon the strength of the distribution system in the vicinity of the test location.

C.4.3.6 To obtain satisfactory test results of theoretical calculation of expected flows or rated capacities, sufficient discharge should be achieved to cause a drop in pressure at the residual hydrant of at least 25 percent, or to flow the total demand necessary for fire-fighting purposes.

C.4.3.7 If the mains are small and the system weak, only one or two hydrants need to be flowed.

C.4.3.8 If, on the other hand, the mains are large and the system strong, it may be necessary to flow as many as seven or eight hydrants.

Copyright National Fire Protection Association
Provided by IHS under license with NFPA
No reproduction or networking permitted without license from IHS
Not for Resale

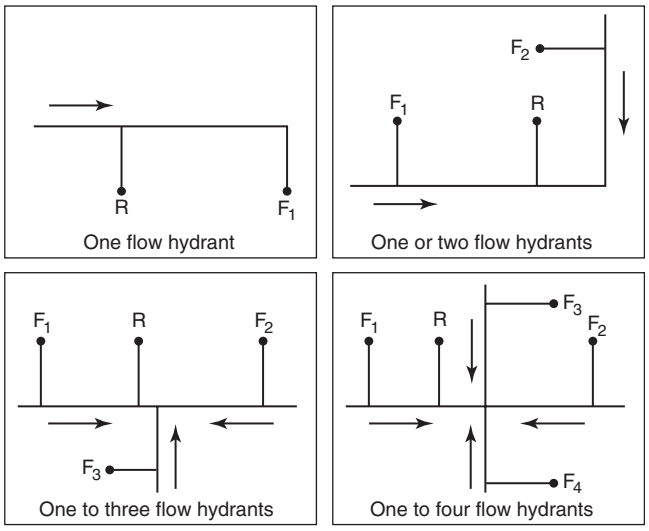

Arrows indicate direction of flow: R – residual hydrant; F – flow hydrant

FIGURE C.4.3.4 Suggested Test Layout for Hydrants.

C.4.4 Equipment.

C.4.4.1 The equipment necessary for field work consists of the following:

(1) A single 200 psi (14 bar) bourdon pressure gauge with 1 psi (0.0689 bar) graduations
(2) A number of pitot tubes
(3) Hydrant wrenches
(4) 50 or 60 psi (3.5 or 4.0 bar) bourdon pressure gauges with 1 psi (0.0689 bar) graduations, and scales with 1/16 in. (1.6 mm) graduations [One pitot tube, a 50 or 60 psi (3.5 or 4.0 bar) gauge, a hydrant wrench, a scale for each hydrant to be flowed]
(5) A special hydrant cap tapped with a hole into which a short length of ¼ in. (6.35 mm) brass pipe is fitted; this pipe is provided with a T connection for the 200 psi (14 bar) gauge and a cock at the end for relieving air pressure.

C.4.4.2 All pressure gauges should be calibrated at least every 12 months, or more frequently depending on use.

C.4.4.3 When more than one hydrant is flowed, it is desirable and could be necessary to use portable radios to facilitate communication between team members.

C.4.4.4 It is preferred to use stream straightener with a known coefficient of discharge when testing hydrants due to a more streamlined flow and more accurate pitot reading.

C.4.5 Test Procedure.

C.4.5.1 In a typical test, the 200 psi (14 bar) gauge is attached to one of the 2½ in. (64 mm) outlets of the residual hydrant using the special cap.

C.4.5.2 The cock on the gauge piping is opened, and the hydrant valve is opened full.

C.4.5.3 As soon as the air is exhausted from the barrel, the cock is closed.

C.4.5.4 A reading (static pressure) is taken when the needle comes to rest.

C.4.5.5 At a given signal, each of the other hydrants is opened in succession, with discharge taking place directly from the open hydrant butts.

C.4.5.6 Hydrants should be opened one at a time.

C.4.5.7 With all hydrants flowing, water should be allowed to flow for a sufficient time to clear all debris and foreign substances from the stream(s).

C.4.5.8 At that time, a signal is given to the people at the hydrants to read the pitot pressure of the streams simultaneously while the residual pressure is being read.

C.4.5.9 The final magnitude of the pressure drop can be controlled by the number of hydrants used and the number of outlets opened on each.

C.4.5.10 After the readings have been taken, hydrants should be shut down slowly, one at a time, to prevent undue surges in the system.

C.4.6 Pitot Readings.

C.4.6.1 When measuring discharge from open hydrant butts, it is always preferable from the standpoint of accuracy to use 2½ in. (64 mm) outlets rather than pumper outlets.

C.4.6.2 In practically all cases, the 2½ in. (64 mm) outlets are filled across the entire cross section during flow, while in the case of the larger outlets there is very frequently a void near the bottom.

C.4.6.3 When measuring the pitot pressure of a stream of practically uniform velocity, the orifice in the pitot tube is held downstream approximately one-half the diameter of the hydrant outlet or nozzle opening, and in the center of the stream.

C.4.6.4 The center line of the orifice should be at right angles to the plane of the face of the hydrant outlet.

C.4.6.5 The air chamber on the pitot tube should be kept elevated.

C.4.6.6 Pitot readings of less than 10 psi (0.7 bar) and more than 30 psi (2.0 bar) should be avoided, if possible.

C.4.6.7 Opening additional hydrant outlets will aid in controlling the pitot reading.

C.4.6.8 With dry barrel hydrants, the hydrant valve should be wide open to minimize problems with underground drain valves.

C.4.6.9 With wet barrel hydrants, the valve for the flowing outlet should be wide open to give a more streamlined flow and a more accurate pitot reading. (See Figure C.4.6.9.)

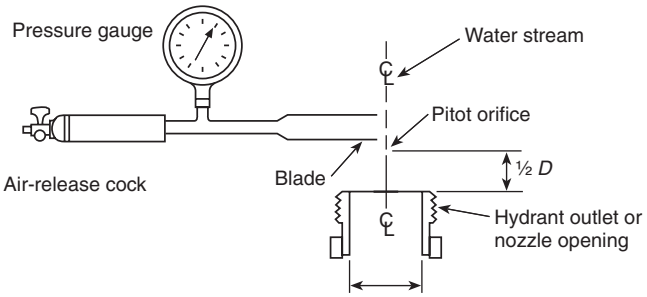

FIGURE C.4.6.9 Pitot Tube Position.

Copyright National Fire Protection Association
Provided by IHS under license with NFPA
No reproduction or networking permitted without license from IHS
Not for Resale

C.4.7 Determination of Discharge.

C.4.7.1 At the hydrants used for flow during the test, the discharges from the open butts are determined from measurements of the diameter of the outlets flowed, the pitot pressure (velocity head) of the streams as indicated by the pitot gauge readings, and the coefficient of the outlet being flowed as determined from Figure C.4.7.1.

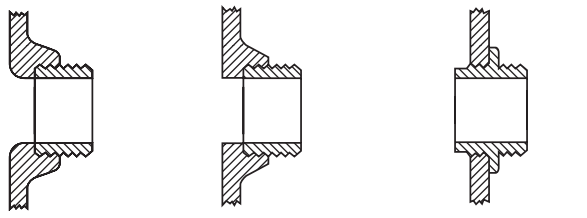

FIGURE C.4.7.1 Three General Types of Hydrant Outlets and Their Coefficients of Discharge.

C.4.7.2 If flow tubes (stream straighteners) are being utilized, a coefficient of 0.95 is suggested unless the coefficient of the tube is known.

C.4.7.3 The formula used to compute the discharge, Q, in gpm from these measurements is as follows:

$$Q = cd^2\sqrt{p} \qquad \textbf{(C.4.7.3)}$$

where:
c = coefficient of discharge (see Figure C.4.7.1)
d = diameter of the outlet in inches
p = pitot pressure (velocity head) in psi

C.4.8 Use of Pumper Outlets.

C.4.8.1 If it is necessary to use a pumper outlet, and flow tubes (stream straighteners) are not available, the best results are obtained with the pitot pressure (velocity head) maintained between 5 psi and 10 psi (0.3 bar and 0.7 bar).

C.4.8.2 For pumper outlets, the approximate discharge can be computed from Equation C.4.7.3 using the pitot pressure (velocity head) at the center of the stream and multiplying the result by one of the coefficients in Table C.4.8.2, depending upon the pitot pressure (velocity head)

Table C.4.8.2 Pumper Outlet Coefficients Pitot Pressure

Velocity Head		
psi	**bar**	**Coefficient**
2	0.14	0.97
3	0.21	0.92
4	0.28	0.89
5	0.35	0.86
6	0.41	0.84
7 and over	0.48 and over	0.83

C.4.8.3 These coefficients are applied in addition to the coefficient in Equation C.4.7.3 and are for average-type hydrants.

C.4.9 Determination of Discharge Without a Pitot.

C.4.9.1 If a pitot tube is not available for use to measure the hydrant discharge, a 50 or 60 psi (3.5 or 4.0 bar) gauge tapped into a hydrant cap can be used.

C.4.9.2 The hydrant cap with gauge attached is placed on one outlet, and the flow is allowed to take place through the other outlet at the same elevation.

C.4.9.3 The readings obtained from a gauge so located, and the readings obtained from a gauge on a pitot tube held in the stream, are approximately the same.

C.4.10 Calculation Results.

C.4.10.1 The discharge in L/min (gpm) for each outlet flowed is obtained from Table C.4.10.1(a) and Table C.4.10.1(b) or by the use of Equation C.4.7.3.

C.4.10.1.1 If more than one outlet is used, the discharges from all are added to obtain the total discharge.

C.4.10.1.2 The formula that is generally used to compute the discharge at the specified residual pressure or for any desired pressure drop is Equation C.4.10.1.2:

$$Q_R = Q_F \times \frac{h_r^{\,0.54}}{h_f^{\,0.54}} \qquad \textbf{(C.4.10.1.2)}$$

where:
Q_R = flow predicted at desired residual pressure
Q_F = total flow measured during test
h_r = pressure drop to desired residual pressure
h_f = pressure drop measured during test

C.4.10.1.3 In this equation, any units of discharge or pressure drop may be used as long as the same units are used for each value of the same variable.

C.4.10.1.4 In other words, if Q_R is expressed in gpm, Q_F must be in gpm, and if h_r is expressed in psi, h_f must be expressed in psi.

C.4.10.1.5 These are the units that are normally used in applying Equation C.4.10.1.2 to fire flow test computations.

C.4.10.2 Discharge Calculations from Table.

C.4.10.2.1 One means of solving this equation without the use of logarithms is by using Table C.4.10.2, which gives the values of the 0.54 power of the numbers from 1 to 175.

C.4.10.2.2 Knowing the values of h_f, h_r, and Q_F, the values of $h_f^{0.54}$ and $h_r^{0.54}$ can be read from the table and Equation C.4.10.1.2 solved for Q_R.

C.4.10.2.3 Results are usually carried to the nearest 100 gpm (380 L/min) for discharges of 1000 gpm (3800 L/min) or more, and to the nearest 50 gpm (190 L/min) for smaller discharges, which is as close as can be justified by the degree of accuracy of the field observations.

C.4.10.2.4 Insert in Equation C.4.10.1.2 the values of $h_r^{0.54}$ and $h_f^{0.54}$ determined from the table and the value of Q_F, and solve the equation for Q_R.

Copyright National Fire Protection Association
Provided by IHS under license with NFPA
No reproduction or networking permitted without license from IHS
Not for Resale

Table C.4.10.1(a) Theoretical Discharge Through Circular Orifices (U.S. Gallons of Water per Minute)

Pitot Pressure*		Velocity Discharge	Orifice Size (in.)											
(psi)	Feet†	(ft/sec)	2	2.25	2.375	2.5	2.625	2.75	3	3.25	3.5	3.75	4	4.5
1	2.31	12.2	119	151	168	187	206	226	269	315	366	420	477	604
2	4.61	17.25	169	214	238	264	291	319	380	446	517	593	675	855
3	6.92	21.13	207	262	292	323	356	391	465	546	633	727	827	1047
4	9.23	24.39	239	302	337	373	411	451	537	630	731	839	955	1209
5	11.54	27.26	267	338	376	417	460	505	601	705	817	938	1068	1351
6	13.84	29.87	292	370	412	457	504	553	658	772	895	1028	1169	1480
7	16.15	32.26	316	400	445	493	544	597	711	834	967	1110	1263	1599
8	18.46	34.49	338	427	476	528	582	638	760	891	1034	1187	1350	1709
9	20.76	36.58	358	453	505	560	617	677	806	946	1097	1259	1432	1813
10	23.07	38.56	377	478	532	590	650	714	849	997	1156	1327	1510	1911
11	25.38	40.45	396	501	558	619	682	748	891	1045	1212	1392	1583	2004
12	27.68	42.24	413	523	583	646	712	782	930	1092	1266	1454	1654	2093
13	29.99	43.97	430	545	607	672	741	814	968	1136	1318	1513	1721	2179
14	32.3	45.63	447	565	630	698	769	844	1005	1179	1368	1570	1786	2261
15	34.61	47.22	462	585	652	722	796	874	1040	1221	1416	1625	1849	2340
16	36.91	48.78	477	604	673	746	822	903	1074	1261	1462	1679	1910	2417
17	39.22	50.28	492	623	694	769	848	930	1107	1300	1507	1730	1969	2491
18	41.53	51.73	506	641	714	791	872	957	1139	1337	1551	1780	2026	2564
19	43.83	53.15	520	658	734	813	896	984	1171	1374	1593	1829	2081	2634
20	46.14	54.54	534	676	753	834	920	1009	1201	1410	1635	1877	2135	2702
22	50.75	57.19	560	709	789	875	964	1058	1260	1478	1715	1968	2239	2834
24	55.37	59.74	585	740	825	914	1007	1106	1316	1544	1791	2056	2339	2960
26	59.98	62.18	609	770	858	951	1048	1151	1369	1607	1864	2140	2434	3081
28	64.6	64.52	632	799	891	987	1088	1194	1421	1668	1934	2220	2526	3197
30	69.21	66.79	654	827	922	1022	1126	1236	1471	1726	2002	2298	2615	3310
32	73.82	68.98	675	855	952	1055	1163	1277	1519	1783	2068	2374	2701	3418
34	78.44	71.1	696	881	981	1087	1199	1316	1566	1838	2131	2447	2784	3523
36	83.05	73.16	716	906	1010	1119	1234	1354	1611	1891	2193	2518	2865	3626
38	87.67	75.17	736	931	1038	1150	1268	1391	1656	1943	2253	2587	2943	3725
40	92.28	77.11	755	955	1065	1180	1300	1427	1699	1993	2312	2654	3020	3822
42	96.89	79.03	774	979	1091	1209	1333	1462	1740	2043	2369	2719	3094	3916
44	101.51	80.88	792	1002	1116	1237	1364	1497	1781	2091	2425	2783	3167	4008
46	106.12	82.7	810	1025	1142	1265	1395	1531	1821	2138	2479	2846	3238	4098
48	110.74	84.48	827	1047	1166	1292	1425	1563	1861	2184	2533	2907	3308	4186
50	115.35	86.22	844	1068	1190	1319	1454	1596	1899	2229	2585	2967	3376	4273
52	119.96	87.93	861	1089	1214	1345	1483	1627	1937	2273	2636	3026	3443	4357
54	124.58	89.61	877	1110	1237	1370	1511	1658	1974	2316	2686	3084	3508	4440
56	129.19	91.2	893	1130	1260	1396	1539	1689	2010	2359	2735	3140	3573	4522
58	133.81	92.87	909	1150	1282	1420	1566	1719	2045	2400	2784	3196	3636	4602
60	138.42	94.45	925	1170	1304	1445	1593	1748	2080	2441	2831	3250	3698	4681
62	143.03	96.01	940	1189	1325	1469	1619	1777	2115	2482	2878	3304	3759	4758
64	147.65	97.55	955	1209	1347	1492	1645	1805	2148	2521	2924	3357	3820	4834
66	152.26	99.07	970	1227	1367	1515	1670	1833	2182	2561	2970	3409	3879	4909
68	156.88	100.55	984	1246	1388	1538	1696	1861	2215	2599	3014	3460	3937	4983
70	161.49	102.03	999	1264	1408	1560	1720	1888	2247	2637	3058	3511	3995	5056
72	166.1	103.47	1013	1282	1428	1583	1745	1915	2279	2674	3102	3561	4051	5127
74	170.72	104.9	1027	1300	1448	1604	1769	1941	2310	2711	3144	3610	4107	5198
76	175.33	106.3	1041	1317	1467	1626	1793	1967	2341	2748	3187	3658	4162	5268
78	179.95	107.69	1054	1334	1487	1647	1816	1993	2372	2784	3228	3706	4217	5337
80	184.56	109.08	1068	1351	1505	1668	1839	2018	2402	2819	3269	3753	4270	5405

(continues)

Copyright National Fire Protection Association
Provided by IHS under license with NFPA
No reproduction or networking permitted without license from IHS
Not for Resale

Table C.4.10.1(a) *Continued*

Pitot Pressure*		Velocity Discharge	Orifice Size (in.)											
(psi)	Feet†	(ft/sec)	2	2.25	2.375	2.5	2.625	2.75	3	3.25	3.5	3.75	4	4.5
82	189.17	110.42	1081	1368	1524	1689	1862	2043	2432	2854	3310	3800	4323	5472
84	193.79	111.76	1094	1385	1543	1709	1885	2068	2461	2889	3350	3846	4376	5538
86	198.4	113.08	1107	1401	1561	1730	1907	2093	2491	2923	3390	3891	4428	5604
88	203.02	114.39	1120	1417	1579	1750	1929	2117	2519	2957	3429	3936	4479	5668
90	207.63	115.68	1132	1433	1597	1769	1951	2141	2548	2990	3468	3981	4529	5733
92	212.24	116.96	1145	1449	1614	1789	1972	2165	2576	3023	3506	4025	4579	5796
94	216.86	118.23	1157	1465	1632	1808	1994	2188	2604	3056	3544	4068	4629	5859
96	221.47	119.48	1169	1480	1649	1827	2015	2211	2631	3088	3582	4111	4678	5921
98	226.09	120.71	1182	1495	1666	1846	2035	2234	2659	3120	3619	4154	4726	5982
100	230.7	121.94	1194	1511	1683	1865	2056	2257	2686	3152	3655	4196	4774	6043
102	235.31	123.15	1205	1526	1700	1884	2077	2279	2712	3183	3692	4238	4822	6103
104	239.93	124.35	1217	1541	1716	1902	2097	2301	2739	3214	3728	4279	4869	6162
106	244.54	125.55	1229	1555	1733	1920	2117	2323	2765	3245	3763	4320	4916	6221
108	249.16	126.73	1240	1570	1749	1938	2137	2345	2791	3275	3799	4361	4962	6280
110	253.77	127.89	1252	1584	1765	1956	2157	2367	2817	3306	3834	4401	5007	6338
112	258.38	129.05	1263	1599	1781	1974	2176	2388	2842	3336	3869	4441	5053	6395
114	263	130.2	1274	1613	1797	1991	2195	2409	2867	3365	3903	4480	5098	6452
116	267.61	131.33	1286	1627	1813	2009	2215	2430	2892	3395	3937	4519	5142	6508
118	272.23	132.46	1297	1641	1828	2026	2234	2451	2917	3424	3971	4558	5186	6564
120	276.84	133.57	1308	1655	1844	2043	2252	2472	2942	3453	4004	4597	5230	6619
122	281.45	134.69	1318	1669	1859	2060	2271	2493	2966	3481	4038	4635	5273	6674
124	286.07	135.79	1329	1682	1874	2077	2290	2513	2991	3510	4070	4673	5317	6729
126	290.68	136.88	1340	1696	1889	2093	2308	2533	3015	3538	4103	4710	5359	6783
128	295.3	137.96	1350	1709	1904	2110	2326	2553	3038	3566	4136	4748	5402	6836
130	299.91	139.03	1361	1722	1919	2126	2344	2573	3062	3594	4168	4784	5444	6890
132	304.52	140.1	1371	1736	1934	2143	2362	2593	3086	3621	4200	4821	5485	6942
134	309.14	141.16	1382	1749	1948	2159	2380	2612	3109	3649	4231	4858	5527	6995
136	313.75	142.21	1392	1762	1963	2175	2398	2632	3132	3676	4263	4894	5568	7047

Notes:

(1) This table is computed from the formula $Q = 29.84cd^2\sqrt{p}$ with $c = 1.00$. The theoretical discharge of seawater, as from fireboat nozzles, can be found by subtracting 1 percent from the figures in Table C.4.10.2, or from the formula $Q = 29.84cd^2\sqrt{p}$.

(2) Appropriate coefficient should be applied where it is read from hydrant outlet. Where more accurate results are required, a coefficient appropriate on the particular nozzle must be selected and applied to the figures of the table. The discharge from circular openings of sizes other than those in the table can readily be computed by applying the principle that quantity discharged under a given head varies as the square of the diameter of the opening.

*This pressure corresponds to velocity head.

†1 psi—2.307 ft of water. For pressure in bars, multiply by 0.01.

--`,,```,,,,````-`-`,,`,,`,`,,`---
Copyright National Fire Protection Association
Provided by IHS under license with NFPA
No reproduction or networking permitted without license from IHS
Not for Resale

Table C.4.10.1(b) Theoretical Discharge Through Circular Orifices (Liters of Water per Minute)

Pitot Pressure*		Velocity Discharge	Orifice Size (mm)											
(kPa)	Meters†	(m/sec)	51	57	60	64	67	70	76	83	89	95	101	114
6.89	0.7	3.72	455	568	629	716	785	857	1010	1204	1385	1578	1783	2272
13.8	1.41	5.26	644	804	891	1013	1111	1212	1429	1704	1960	2233	2524	3215
20.7	2.11	6.44	788	984	1091	1241	1360	1485	1750	2087	2400	2735	3091	3938
27.6	2.81	7.43	910	1137	1260	1433	1571	1714	2021	2410	2771	3158	3569	4547
34.5	3.52	8.31	1017	1271	1408	1602	1756	1917	2259	2695	3099	3530	3990	5084
41.4	4.22	9.1	1115	1392	1543	1755	1924	2100	2475	2952	3394	3867	4371	5569
48.3	4.92	9.83	1204	1504	1666	1896	2078	2268	2673	3189	3666	4177	4722	6015
55.2	5.63	10.51	1287	1608	1781	2027	2221	2425	2858	3409	3919	4466	5048	6431
62	6.33	11.15	1364	1704	1888	2148	2354	2570	3029	3613	4154	4733	5349	6815
68.9	7.03	11.75	1438	1796	1990	2264	2482	2709	3193	3808	4379	4989	5639	7184
75.8	7.73	12.33	1508	1884	2087	2375	2603	2841	3349	3995	4593	5233	5915	7536
82.7	8.44	12.87	1575	1968	2180	2481	2719	2968	3498	4172	4797	5466	6178	7871
89.6	9.14	13.4	1640	2048	2270	2582	2830	3089	3641	4343	4994	5690	6431	8193
96.5	9.84	13.91	1702	2126	2355	2680	2937	3206	3779	4507	5182	5905	6674	8503
103	10.55	14.39	1758	2196	2433	2769	3034	3312	3904	4656	5354	6100	6895	8784
110	11.25	14.87	1817	2269	2515	2861	3136	3423	4035	4812	5533	6304	7125	9078
117	11.95	15.33	1874	2341	2593	2951	3234	3530	4161	4963	5706	6502	7349	9362
124	12.66	15.77	1929	2410	2670	3038	3329	3634	4284	5109	5874	6693	7565	9638
131	13.36	16.2	1983	2477	2744	3122	3422	3735	4403	5251	6038	6880	7776	9906
138	14.06	16.62	2035	2542	2817	3205	3512	3834	4519	5390	6197	7061	7981	10168
152	15.47	17.43	2136	2668	2956	3363	3686	4023	4743	5657	6504	7410	8376	10671
165	16.88	18.21	2225	2779	3080	3504	3840	4192	4941	5893	6776	7721	8727	11118
179	18.28	18.95	2318	2895	3208	3650	4000	4366	5147	6138	7058	8042	9090	11580
193	19.69	19.67	2407	3006	3331	3790	4153	4534	5344	6374	7329	8350	9438	12024
207	21.1	20.36	2492	3113	3450	3925	4301	4695	5535	6601	7590	8648	9775	12453
221	22.5	21.03	2575	3217	3564	4055	4444	4851	5719	6821	7842	8935	10100	12867
234	23.91	21.67	2650	3310	3668	4173	4573	4992	5884	7018	8070	9195	10393	13240
248	25.31	22.3	2728	3408	3776	4296	4708	5139	6058	7225	8308	9466	10699	13630
262	26.72	22.91	2804	3502	3881	4416	4839	5282	6227	7426	8539	9729	10997	14010
276	28.13	23.5	2878	3595	3983	4532	4967	5422	6391	7622	8764	9986	11287	14379
290	29.53	24.09	2950	3685	4083	4646	5091	5557	6551	7813	8984	10236	11570	14740
303	30.94	24.65	3015	3767	4173	4748	5204	5681	6696	7986	9183	10463	11826	15066
317	32.35	25.21	3084	3853	4269	4857	5323	5810	6849	8169	9393	10702	12096	15410
331	33.75	25.75	3152	3937	4362	4963	5439	5937	6999	8347	9598	10935	12360	15747
345	35.16	26.28	3218	4019	4453	5067	5553	6061	7145	8522	9799	11164	12619	16077
358	36.57	26.8	3278	4094	4536	5161	5657	6175	7279	8681	9981	11373	12855	16377
372	37.97	27.31	3341	4173	4624	5261	5766	6294	7419	8849	10175	11593	13104	16694
386	39.38	27.8	3403	4251	4711	5360	5874	6412	7558	9014	10364	11809	13348	17005
400	40.78	28.31	3465	4328	4795	5456	5979	6527	7694	9176	10551	12021	13588	17311
414	42.19	28.79	3525	4403	4878	5551	6083	6640	7827	9335	10734	12230	13823	17611
427	43.6	29.26	3580	4471	4954	5637	6178	6743	7949	9481	10901	12420	14039	17885
441	45	29.73	3638	4544	5035	5729	6278	6853	8078	9635	11078	12622	14267	18176
455	46.41	30.2	3695	4616	5114	5819	6377	6961	8206	9787	11253	12821	14492	18462
469	47.82	30.65	3751	4686	5192	5908	6475	7067	8331	9936	11425	13017	14713	18744
483	49.22	31.1	3807	4756	5269	5995	6570	7172	8454	10083	11594	13210	14931	19022
496	50.63	31.54	3858	4819	5340	6075	6658	7268	8567	10218	11749	13386	15131	19276
510	52.03	31.97	3912	4887	5415	6161	6752	7370	8687	10361	11913	13574	15343	19547
524	53.44	32.71	3965	4953	5488	6245	6844	7470	8806	10503	12076	13759	15552	19813
538	54.85	32.82	4018	5019	5561	6327	6934	7569	8923	10642	12236	13942	15758	20076
552	56.25	33.25	4070	5084	5633	6409	7024	7667	9038	10780	12394	14122	15962	20335

(continues)

Copyright National Fire Protection Association
Provided by IHS under license with NFPA
No reproduction or networking permitted without license from IHS
Not for Resale

Table C.4.10.1(b) *Continued*

Pitot Pressure*		Velocity Discharge	Orifice Size (mm)											
(kPa)	Meters†	(m/sec)	51	57	60	64	67	70	76	83	89	95	101	114
565	57.66	33.66	4118	5143	5699	6484	7106	7757	9144	10906	12539	14287	16149	20573
579	59.07	34.06	4168	5207	5769	6564	7194	7853	9256	11040	12694	14463	16348	20827
593	60.47	34.47	4218	5269	5839	6643	7280	7947	9368	11173	12846	14637	16544	21077
607	61.88	34.87	4268	5331	5907	6721	7366	8040	9478	11304	12997	14809	16738	21324
620	63.29	35.26	4313	5388	5970	6793	7444	8126	9578	11424	13136	14966	16917	21552
634	64.69	35.65	4362	5448	6037	6869	7528	8217	9686	11552	13283	15134	17107	21794
648	66.1	36.04	4410	5508	6103	6944	7610	8307	9792	11679	13429	15301	17294	22033
662	67.5	36.42	4457	5567	6169	7019	7692	8397	9898	11805	13573	15465	17480	22270
676	68.91	36.79	4504	5626	6234	7093	7773	8485	10002	11929	13716	15628	17664	22504
689	70.32	37.17	4547	5680	6293	7161	7848	8566	10097	12043	13847	15777	17833	22719
703	71.72	37.54	4593	5737	6357	7233	7927	8653	10200	12165	13987	15937	18013	22949
717	73.13	37.9	4638	5794	6420	7305	8005	8738	10301	12285	14126	16095	18192	23176
731	74.54	38.27	4684	5850	6482	7376	8083	8823	10401	12405	14263	16251	18369	23401
745	75.94	38.63	4728	5906	6544	7446	8160	8907	10500	12523	14399	16406	18544	23624
758	77.35	38.98	4769	5957	6601	7510	8231	8985	10591	12632	14524	16548	18705	23830
772	78.76	39.33	4813	6012	6662	7580	8307	9067	10688	12748	14658	16701	18877	24049
786	80.16	39.68	4857	6066	6722	7648	8382	9149	10785	12863	14790	16851	19047	24266
800	81.57	40.03	4900	6120	6781	7716	8456	9230	10880	12977	14921	17001	19216	24481
813	82.97	40.37	4939	6170	6836	7778	8525	9305	10968	13082	15042	17138	19371	24679
827	84.38	40.71	4982	6223	6895	7845	8598	9385	11063	13194	15171	17285	19538	24891
841	85.79	41.05	5024	6275	6953	7911	8670	9464	11156	13305	15299	17431	19702	25100
855	87.19	41.39	5065	6327	7011	7977	8742	9542	11248	13416	15425	17575	19866	25309
869	88.6	41.72	5107	6379	7068	8042	8813	9620	11340	13525	15551	17719	20028	25515
882	90.01	42.05	5145	6426	7121	8102	8879	9692	11424	13626	15667	17851	20177	25705
896	91.41	42.38	5185	6477	7177	8166	8949	9768	11515	13734	15791	17992	20336	25908
910	92.82	42.7	5226	6527	7233	8229	9019	9844	11604	13840	15914	18132	20495	26110
924	94.23	43.03	5266	6577	7288	8292	9088	9920	11693	13947	16036	18271	20652	26310
938	95.63	43.35	5305	6627	7343	8355	9156	9995	11782	14052	16157	18409	20807	26509

Notes:

(1) This table is computed from the formula $Q_m = 0.0666cd^2\sqrt{P_m}$ with $c = 1.00$. The theoretical discharge of seawater, as from fireboat nozzles, can be found by subtracting 1 percent from the figures in Table 4.10.2, or from the formula $Q_m = 0.065cd^2m\sqrt{P_m}$

(2) Appropriate coefficient should be applied where it is read from hydrant outlet. Where more accurate results are required, a coefficient appropriate on the particular nozzle must be selected and applied to the figures of the table. The discharge from circular openings of sizes other than those in the table can readily be computed by applying the principle that quantity discharged under a given head varies as the square of the diameter of the opening.

*This pressure corresponds to velocity head.

†1 kPa—0.102 m of water. For pressure in bars, multiply by 0.01.

Copyright National Fire Protection Association
Provided by IHS under license with NFPA
No reproduction or networking permitted without license from IHS
Not for Resale

Table C.4.10.2 Values of h to the 0.54 Power

h	$h^{0.54}$	h	$h^{0.54}$	h	$h^{0.54}$	h	$h^{0.54}$	h	$h^{0.54}$
1	1.00	36	6.93	71	9.99	106	12.41	141	14.47
2	1.45	37	7.03	72	10.07	107	12.47	142	14.53
3	1.81	38	7.13	73	10.14	108	12.53	143	14.58
4	2.11	39	7.23	74	10.22	109	12.60	144	14.64
5	2.39	40	7.33	75	10.29	110	12.66	145	14.69
6	2.63	41	7.43	76	10.37	111	12.72	146	14.75
7	2.86	42	7.53	77	10.44	112	12.78	147	14.80
8	3.07	43	7.62	78	10.51	113	12.84	148	14.86
9	3.28	44	7.72	79	10.59	114	12.90	149	14.91
10	3.47	45	7.81	80	10.66	115	12.96	150	14.97
11	3.65	46	7.91	81	10.73	116	13.03	151	15.02
12	3.83	47	8.00	82	10.80	117	13.09	152	15.07
13	4.00	48	8.09	83	10.87	118	13.15	153	15.13
14	4.16	49	8.18	84	10.94	119	13.21	154	15.18
15	4.32	50	8.27	85	11.01	120	13.27	155	15.23
16	4.48	51	8.36	86	11.08	121	13.33	156	15.29
17	4.62	52	8.44	87	11.15	122	13.39	157	15.34
18	4.76	53	8.53	88	11.22	123	13.44	158	15.39
19	4.90	54	8.62	89	11.29	124	13.50	159	15.44
20	5.04	55	8.71	90	11.36	125	13.56	160	15.50
21	5.18	56	8.79	91	11.43	126	13.62	161	15.55
22	5.31	57	8.88	92	11.49	127	13.68	162	15.60
23	5.44	58	8.96	93	11.56	128	13.74	163	15.65
24	5.56	59	9.04	94	11.63	129	13.80	164	15.70
25	5.69	60	9.12	95	11.69	130	13.85	165	15.76
26	5.81	61	9.21	96	11.76	131	13.91	166	15.81
27	5.93	62	9.29	97	11.83	132	13.97	167	15.86
28	6.05	63	9.37	98	11.89	133	14.02	168	15.91
29	6.16	64	9.45	99	11.96	134	14.08	169	15.96
30	6.28	65	9.53	100	12.02	135	14.14	170	16.01
31	6.39	66	9.61	101	12.09	136	14.19	171	16.06
32	6.50	67	9.69	102	12.15	137	14.25	172	16.11
33	6.61	68	9.76	103	12.22	138	14.31	173	16.16
34	6.71	69	9.84	104	12.28	139	14.36	174	16.21
35	6.82	70	9.92	105	12.34	140	14.42	175	16.26

C.4.11 Data Sheet.

C.4.11.1 The data secured during the testing of hydrants for uniform marking can be valuable for other purposes.

C.4.11.2 With this in mind, it is suggested that the form shown in Figure C.4.11.2 be used to record information that is taken.

C.4.11.3 The back of the form should include a location sketch.

C.4.11.4 Results of the flow test should be indicated on a hydraulic graph, such as the one shown in Figure C.4.11.4.

C.4.11.5 When the tests are complete, the forms should be filed for future reference by interested parties.

C.4.12 System Corrections.

C.4.12.1 It must be remembered that flow test results show the strength of the distribution system and do not necessarily indicate the degree of adequacy of the entire waterworks system.

C.4.12.2 Consider a system supplied by pumps at one location and having no elevated storage.

C.4.12.3 If the pressure at the pump station drops during the test, it is an indication that the distribution system is capable of delivering more than the pumps can deliver at their normal operating pressure.

C.4.12.4 It is necessary to use a value for the drop in pressure for the test that is equal to the actual drop obtained in the field during the test, minus the drop in discharge pressure at the pumping station.

C.4.12.5 If sufficient pumping capacity is available at the station and the discharge pressure could be maintained by operating additional pumps, the water system as a whole could deliver the computed quantity.

Copyright National Fire Protection Association
Provided by IHS under license with NFPA
No reproduction or networking permitted without license from IHS
Not for Resale

Hydrant Flow Test Report

Location _____ Date _____

Test made by _____ Time _____

Representative of _____

Witness _____

State purpose of test _____

_____

Consumption rate during test _____

If pumps affect test, indicate pumps operating _____

Flow hydrants: _____ A_1 A_2 A_3 A_4

Size nozzle _____

Pitot reading _____

Discharge coefficient _____ Total GPM

GPM _____

Static B _____ psi Residual B _____ psi

Projected results @20 psi Residual ___ gpm; or @ ___ psi Residual ___ gpm

Remarks _____

_____

_____

_____

Location map: Show line sizes and distance to next cross-connected line. Show valves and hydrant branch size. Indicate north. Show flowing hydrants – Label A_1, A_2, A_3, A_4. Show location of static and residual – Label B.

Indicate B Hydrant ____ Sprinkler____ Other (identify) _____

© 2007 National Fire Protection Association NFPA 24 (p. 1 of 1)

FIGURE C.4.11.2 Sample Report of a Hydrant Flow Test.

C.4.12.6 If, however, additional pumping units are not available, the distribution system would be capable of delivering the computed quantity, but the water system as a whole would be limited by the pumping capacity.

C.4.12.7 The portion of the pressure drop for which a correction can be made for tests on systems with storage is generally estimated upon the basis of a study of all the tests made and the pressure drops observed on the recording gauge at the station for each.

C.4.12.8 The corrections may vary from very substantial portions of the observed pressure drops for tests near the pumping station, to zero for tests remote from the station.

Annex D Recommended Practice for Marking of Hydrants

This annex is not a part of the requirements of this NFPA document but is included for informational purposes only.

D.1 Annex D was developed based upon the procedures contained in NFPA 291. For additional information on marking of hydrants, see NFPA 291, Chapter 5, Marking of Hydrants.

D.1.1 Scope. The scope of this annex is to provide guidance on marking of hydrants.

D.1.2 Purpose. Fire flow tests are conducted on water distribution systems to determine the rate of flow available at various locations for fire-fighting purposes.

D.1.3 Application.

D.1.3.1 A certain residual pressure in the mains is specified at which the rate of flow should be available.

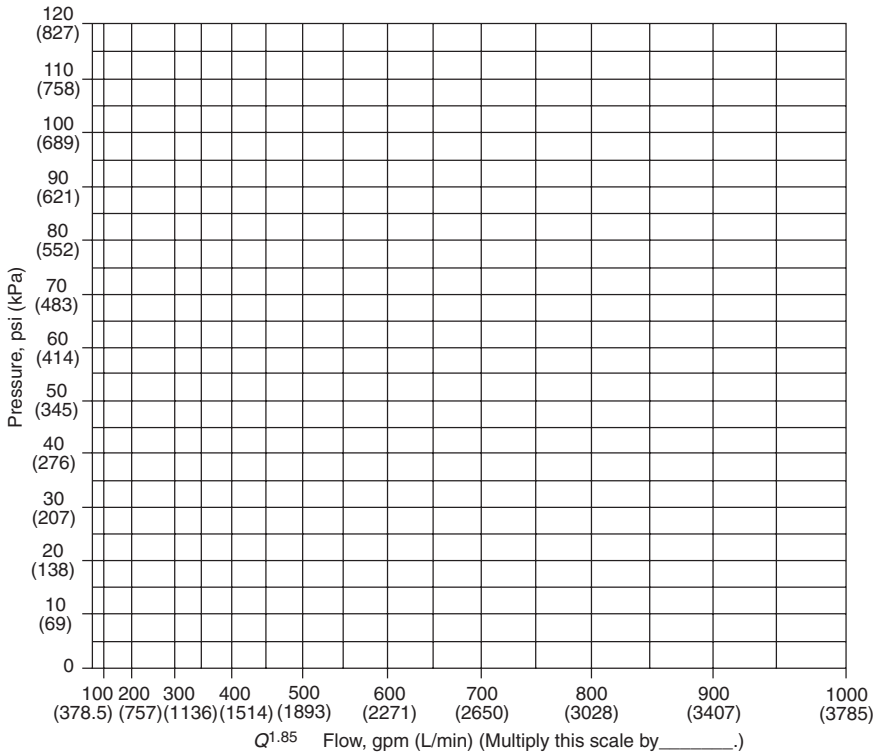

FIGURE C.4.11.4 Sample Graph Sheet.

Copyright National Fire Protection Association
Provided by IHS under license with NFPA
No reproduction or networking permitted without license from IHS
Not for Resale

D.1.3.2 Additional benefit is derived from fire flow tests by the indication of possible deficiencies, such as tuberculation of piping or closed valves or both, which could be corrected to ensure adequate fire flows as needed.

D.1.4 Units. Metric units of measurement in this recommended practice are in accordance with the modernized metric system known as the International System of Units (SI). Two units (liter and bar), outside of but recognized by SI, are commonly used in international fire protection. These units are listed in Table D.1.4 with conversion factors.

Table D.1.4 SI Units and Conversion Factors

Unit Name	Unit Symbol	Conversion Factor
Liter	L	1 gal = 3.785 L
Liter per minute per square meter	$(L/min)/m^2$	1 gpm ft^2 = $(40.746\ L/min)/m^2$
Cubic decimeter	dm^3	1 gal = 3.785 dm^3
Pascal	Pa	1 psi = 6894.757 Pa
Bar	bar	1 psi = 0.0689 bar
Bar	bar	1 bar = 10^5 Pa

Note: For additional conversions and information, see IEEE/ASTM-SI-10.

D.1.4.1 If a value for measurement as given in this recommended practice is followed by an equivalent value in other units, the first value stated is to be regarded as the recommendation. A given equivalent value might be approximate.

D.2 Referenced Publications.

D.2.1 General. The documents or portions thereof listed in this section are referenced within this annex and should be considered part of the recommendations of this document.

D.2.2 NFPA Publications. (Reserved)

D.2.3 Other Publications.

D.2.3.1 ASTM Publications. ASTM International, 100 Barr Harbor Drive, P.O. Box C700, West Conshohocken, PA 19428-2959.

IEEE/ASTM-SI-10, *Standard for Use of the International System of Units (SI): The Modern Metric System*, 1997.

D.3 Definitions.

D.3.1 General. The definitions contained in this annex apply to the terms used in this annex practice. Where terms are not included, common usage of the terms applies.

D.3.2 NFPA Official Definitions.

D.3.2.1 Authority Having Jurisdiction (AHJ). An organization, office, or individual responsible for enforcing the requirements of a code or standard, or for approving equipment, materials, an installation, or a procedure. *(See A.3.2.2.)*

D.3.2.2 Listed. Equipment, materials, or services included in a list published by an organization that is acceptable to the authority having jurisdiction and concerned with evaluation of products or services, that maintains periodic inspection of production of listed equipment or materials or periodic evaluation of services, and whose listing states that either the equipment, material, or service meets appropriate designated standards or has been tested and found suitable for a specified purpose. *(See A.3.2.4.)*

D.3.2.3 Should. Indicates a recommendation or that which is advised but not required.

D.3.3 General Definitions.

D.3.3.1 Rated Capacity. The flow available from a hydrant at the designated residual pressure (rated pressure), either measured or calculated.

D.4 Classification of Hydrants. Hydrants should be classified in accordance with their rated capacities [at 20 psi (1.4 bar) residual pressure or other designated value] as follows:

(1) Class AA — Rated capacity of 1500 gpm (5680 L/min) or greater
(2) Class A — Rated capacity of 1000 to 1499 gpm (3785 to 5675 L/min)
(3) Class B — Rated capacity of 500 to 999 gpm (1900 to 3780 L/min)
(4) Class C — Rated capacity of less than 500 gpm (1900 L/min)

D.5 Marking of Hydrants.

D.5.1 Recommended Hydrant Color Schemes.

D.5.1.1 All barrels are to be chrome yellow except in cases where another color has already been adopted.

D.5.1.2 The tops and nozzle caps should be painted with the following capacity-indicating color scheme to provide simplicity and consistency with colors used in signal work for safety, danger, and intermediate condition:

(1) Class AA — light blue
(2) Class A — green
(3) Class B — orange
(4) Class C — red

D.5.1.3 For rapid identification at night, it is recommended that the capacity colors be of a reflective-type paint.

D.5.1.4 Hydrants rated at less than 20 psi (1.4 bar) should have the rated pressure stenciled in black on the hydrant top.

D.5.1.5 In addition to the painted top and nozzle caps, it can be advantageous to stencil the rated capacity of high-volume hydrants on the top.

D.5.1.6 The classification and marking of hydrants provided for in this chapter anticipate determination based on individual flow test.

D.5.1.7 Where a group of hydrants can be used at the time of a fire, some special marking designating group-flow capacity may be desirable.

D.5.2 Permanently Inoperative Hydrants. Fire hydrants that are permanently inoperative or unusable should be removed.

D.5.3 Temporarily Inoperative Hydrants. Fire hydrants that are temporarily inoperative or unusable should be wrapped or otherwise provided with temporary indication of their condition.

D.5.4 Flush Hydrants. Location markers for flush hydrants should carry the same background color as stated above for class indication, with such other data stenciled thereon as deemed necessary.

D.5.5 Marking of Hydrants Within Private Enclosures.

D.5.5.1 When private hydrants are located on public streets, they should be marked in accordance with the requirements of the authority having jurisdiction.

Copyright National Fire Protection Association
Provided by IHS under license with NFPA
No reproduction or networking permitted without license from IHS
Not for Resale

Annex E Informational References

E.1 Referenced Publications. The documents or portions thereof listed in this annex are referenced within the informational sections of this standard and are not part of the requirements of this document unless also listed in Chapter 2 for other reasons.

E.1.1 NFPA Publications. National Fire Protection Association, 1 Batterymarch Park, Quincy, MA 02169-7471.

NFPA 20, *Standard for the Installation of Stationary Pumps for Fire Protection*, 2007 edition.

NFPA 22, *Standard for Water Tanks for Private Fire Protection*, 2003 edition.

NFPA 72®, *National Fire Alarm Code®*, 2007 edition.

NFPA 291, *Recommended Practice for Fire Flow Testing and Marking of Hydrants*, 2007 edition.

NFPA 1962, *Standard for the Inspection, Care, and Use of Fire Hose, Couplings, and Nozzles and the Service Testing of Fire Hose*, 2003 edition.

E.1.2 Other Publications.

E.1.2.1 ACPA Publication. American Concrete Pipe Association, 675 Grigsby Way, Cedar Hill, TX 75104-2537.

Concrete Pipe Handbook.

E.1.2.2 ASME Publication. American Society of Mechanical Engineers, Three Park Avenue, New York, NY 10016-5990.

ASME B16.1, *Cast Iron Pipe Flanges and Flanged Fittings*, 1989.

E.1.2.3 ASTM Publications. ASTM International, 100 Barr Harbor Drive, P.O. Box C700, West Conshohocken, PA 19428-2959.

ASTM A 126, *Standard Specification for Gray Iron Castings for Valves, Flanges and Pipe Fittings*, 1993.

ASTM A 197, *Standard Specification for Cupola Malleable Iron*, 1987.

ASTM A 307, *Standard Specification for Carbon Steel Bolts and Studs,* 1994.

ASTM C 296, *Standard Specification for Asbestos-Cement Pressure Pipe*, 1988.

IEEE/ASTM-SI-10, *Standard for Use of the International System of Units (SI): The Modern Metric System*, 1997.

E.1.2.4 AWWA Publications. American Water Works Association, 6666 West Quincy Avenue, Denver, CO 80235.

AWWA C104, *Cement Mortar Lining for Ductile Iron Pipe and Fittings for Water*, 1990.

AWWA C105, *Polyethylene Encasement for Ductile Iron Pipe Systems*, 1988.

AWWA C110, *Ductile Iron and Gray Iron Fittings, 3-in. Through 48-in., for Water and Other Liquids*, 1987.

AWWA C111, *Rubber-Gasket Joints for Ductile Iron Pressure Pipe and Fittings*, 1990.

AWWA C115, *Flanged Ductile Iron Pipe with Ductile Iron or Gray Iron Threaded Flanges*, 1988.

AWWA C116, *Protective Fusion-Bonded Epoxy Coatings for the Interior and Exterior Surfaces of Ductile-Iron and Gray-Iron Fittings for Water Supply Service*, 2003.

AWWA C150, *Thickness Design of Ductile Iron Pipe*, 1981.

AWWA C151, *Ductile Iron Pipe, Centrifugally Cast for Water*, 1986.

AWWA C153, *Ductile Iron Compact Fittings, 3 in. through 24 in. and 54 in. through 64 in. for Water Service*, 2000.

AWWA C203, *Coal-Tar Protective Coatings and Linings for Steel Water Pipelines Enamel and Tape — Hot Applied*, 1986.

AWWA C205, *Cement-Mortar Protective Lining and Coating for Steel Water Pipe 4 in. and Larger — Shop Applied*, 1989.

AWWA C206, *Field Welding of Steel Water Pipe*, 1988.

AWWA C208, *Dimensions for Fabricated Steel Water Pipe Fittings*, 1983.

AWWA C300, *Reinforced Concrete Pressure Pipe, Steel-Cylinder Type, for Water and Other Liquids*, 1989.

AWWA C301, *Prestressed Concrete Pressure Pipe, Steel-Cylinder Type, for Water and Other Liquids*, 1984.

AWWA C302, *Reinforced Concrete Pressure Pipe, Non-Cylinder Type, for Water and Other Liquids*, 1987.

AWWA C303, *Reinforced Concrete Pressure Pipe, Steel-Cylinder Type, Pretensioned, for Water and Other Liquids*, 1987.

AWWA C400, *Standard for Asbestos-Cement Distribution Pipe, 4 in. Through 16 in., for Water and Other Liquids*, 1980.

AWWA C401, *Standard Practice for the Selection of Asbestos-Cement Water Pipe*, 1983.

AWWA C600, *Standard for the Installation of Ductile-Iron Water Mains and Their Appurtenances*, 1982.

AWWA C602, *Cement-Mortar Lining of Water Pipe Lines 4 in. and Larger — in Place*, 1989.

AWWA C603, *Standard for the Installation of Asbestos-Cement Water Pipe*, 1978.

AWWA C606, *Grooved and Shouldered Joints*, 1997.

AWWA C900, *Polyvinyl Chloride (PVC) Pressure Pipe, 4 in. Through 12 in., for Water and Other Liquids*, 1989.

AWWA M9, *Concrete Pressure Pipe*, 1995.

AWWA M11, *A Guide for Steel Pipe Design and Installation*, 1989.

AWWA M17, *Installation, Operation and Maintenance of Fire Hydrants*, 1980.

AWWA M41, *Ductile Iron Pipe and Fittings.*

E.1.2.5 DIPRA Publications. Ductile Iron Pipe Research Association, 245 Riverchase Parkway East, Suite O, Birmingham, AL 35244.

Installation Guide for Ductile Iron Pipe.

Thrust Restraint Design for Ductile Iron Pipe.

E.1.2.6 EBAA Iron Publications. EBAA Iron, Inc., P.O. Box 857, Eastland, TX 76448.

EBAA Iron, *Thrust Restraint Design Equations and Tables for Ductile Iron and PVC Pipe.*

E.1.2.7 UBPPA Publications. Uni-Bell PVC Pipe Association, 2655 Villa Creek Drive, Dallas, TX 75234.

Handbook of PVC Pipe.

E.1.2.8 U.S. Government Publication. U.S. Government Printing Office, Washington, DC 20402.

U.S. Federal Standard No. 66C, *Standard for Steel Chemical Composition and Harden Ability*, April 18, 1967 change notice No. 2, April 16, 1970, as promulgated by the U.S. Federal Government General Services Administration.

E.2 Informational References. (Reserved)

E.3 References for Extracts in Informational Sections. (Reserved)

Copyright National Fire Protection Association
Provided by IHS under license with NFPA
No reproduction or networking permitted without license from IHS
Not for Resale

Index

Copyright © 2006 National Fire Protection Association. All Rights Reserved.

The copyright in this index is separate and distinct from the copyright in the document that it indexes. The licensing provisions set forth for the document are not applicable to this index. This index may not be reproduced in whole or in part by any means without the express written permission of NFPA.

-A-

Aboveground pipe ..... Chap. 12
Protection of 10.5.1, A.10.5.1
Sizes ..... Chap. 13
Accessibility
Control valves 6.2.10, A.6.2.10
Fire department connections 5.9.5.2
Approved (definition) 3.2.1, A.3.2.1
Appurtenance (definition) 3.3.1
Authority having jurisdiction (definition) 3.2.2, A.3.2.2, C.3.2.1, D.3.2.1

-B-

Backfilling 10.9, 10.10.2.6, 10.10.2.7, A.10.10.2.6
Backflow prevention assemblies ..... 7.3.7, 10.10.2.5, A.5.4, Fig. A.5.9(b)
Bolts 10.8.3.1.3, 10.8.3.4, 10.8.3.5
Brazed and pressure fitting methods 10.3.3
Buried pipe ..... *see* Underground pipe

-C-

Calculations, hydraulic ..... Chap. 11
Central station supervision ..... 6.6.2, B.2, Annex B
Check valves ..... 5.9.3.1, 6.2.3 to 6.2.6, 6.7, 7.3.7, A.5.4, Fig. A.5.9(a), Fig. A.5.9(b), A.6.2.5
Definition 3.3.15.1
Clamps, pipe 10.8.3.1.1, 10.8.3.4, 10.8.3.5, A.10.8.3.5
Combined service mains 1.1.2
Concrete pipe ..... Table 10.1.1.A.10.1.1, A.10.4.1
Connections
Fire department ..... *see* Fire department connections
Hose 8.1.4
Hydrants ..... 7.1.1 to 7.1.3
Main to building 6.3.1, A.6.3.1
Penstocks, flumes, rivers, lakes, or reservoirs 5.8
Public water supply 5.1, 5.4, 5.5, A.5.1, A.5.4
Signs on ..... 5.9.5.3 to 5.9.5.5
Construction, hose houses 8.3
Contamination of water supplies, protection against 5.4.2
Contractor's Material and Test Certificate 10.10.1
Control valves ..... 6.1.1, 6.1.4, 6.2, A.6.2.5 to A.6.2.10, A.7.2.3
Operating test 10.10.2.4.3
Sectional 6.5, 6.6.2
Copper
Fittings ..... Table 10.2.1(a)
Joints 10.3.4
Pipe and tubing ..... Table 10.1.1
Tubing 10.3.4, A.10.1.1
Corrosion resistance 10.8.3.5, 12.2.4, A.10.8.3.5
Corrosion resistant piping (definition) 3.3.2
Corrosion retardant material (definition) 3.3.3
Couplings
Hose 5.9.2
Rod 10.8.3.4

-D-

Damage, protection against
Aboveground pipe 10.5.1, 12.2, A.10.5.1
Buried pipe 10.4.1, 10.6, A.10.4.1, A.10.6.7
Hydrants 7.3.5, 7.3.6
Dead-end mains A.5.1
Definitions ..... Chap. 3
Drains
Automatic drip ..... 5.9.4, Fig. A.5.9(a)
Hydrants 7.3.1, 7.3.2, 10.10.2.4.2, A.7.3.1
Dry barrel hydrant (definition) 3.4.1.1

-E-

Earthquakes, protection from 12.2.5
Equivalency to standard 1.4

-F-

Fire department connections ..... 4.1.3(10), 5.9, 10.1.3, 10.1.6.2, A.5.9
Definition 3.3.4
Fire pump (definition) 3.3.5
Fire suppression system supply pipe 6.6.2, 13.3
Fittings, pipe 10.2, A.10.2.4, A.10.2.5
Buried 10.2.5, A.10.2.5, A.10.4.1
Inspection 10.7.1
Installation ..... 10.7.3 to 10.7.5, 10.7.11
Pressure limits 10.2.3
Flow hydrant (definition) 3.4.1.2
Flow tests
Definition 3.3.14.1
Hydrants ..... Annex C
Public water supply 5.1.2
Flumes 5.8, A.5.9
Flushing of pipe 10.10.2.1
Flushing tests (definition) 3.3.14.2
Foam systems 1.1.1, 5.2.2, 13.2
Freezing, protection against ... 10.4.1, 10.5, 12.2.3, A.10.4.1, A.10.5.1

-G-

Gate valves ..... 4.1.3(9), 6.1.3, 6.1.5, 6.6.3, 7.1.1.3
Groove joining methods 10.3.2
Grounding 10.6.8

-H-

Hazardous areas, protection from 12.2.1, 12.2.2
Hose ..... 7.3.3, Chap. 8, A.7.3.3
Connections 8.1.4
Domestic use prohibited 8.7
Tests A.8.1.1, A.8.6.1
Types of A.8.1.3
Hose couplings 5.9.2
Hose houses ..... 1.1.1, 4.1.3(9), 8.1.2
Construction 8.3
Definition 3.3.6
Equipment 8.6, A.8.6.1
Hydrants within 8.2.2
Location 8.2.1
Marking 8.5
Size and arrangement 7.3.3, 8.4, A.7.3.3, A.8.4
Hose reels or carriers 8.1.2, 8.2.3
Hydrants ..... Chap. 7; *see also* Hose
Butt (definition) 3.3.7
Definition 3.4.1
Dry barrel (definition) 3.4.1.1
Fire flow tests ..... Annex C

Copyright National Fire Protection Association
Provided by IHS under license with NFPA
No reproduction or networking permitted without license from IHS
Not for Resale

Marking of ..... Annex D
Private .....*see* Private fire hydrants
Public (definition) 3.4.1.4, 7.2.2
Rated capacity .....*see* Rated capacity
Residual (definition) 3.4.1.5
Wet barrel (definition) 3.4.1.6
Hydraulically calculated water demand flow rate 3.3.8
Hydraulic calculations ..... 5.2.2, Chap. 11, 13.2
Hydrostatic testing 10.10.2.2, 10.10.2.3, A.10.2.2.1, A.10.2.2.4
Definition 3.3.14.3

-I-

Identification
Connections ..... 5.9.5.3 to 5.9.5.5
Hose houses 8.5
Hydrants ..... A.7.1.2, A.7.1.4, Annex D
Valves 6.6.1, B.4
Indicating valves ..... 4.1.3(8), 6.1.1, 6.1.2
Definition 3.3.15.2
Inspection 10.7.1, 10.7.2, 14.1
Installation 4.2
Hydrants 7.3, A.7.3.1, A.7.3.3
Pipe and fittings 10.1.4, 10.7, 10.10.2.6, 10.10.2.7, A.10.1.4, A.10.10.2.6
Iron
Fittings ..... Table 10.2.1(a), A.10.2.4, A.10.2.5
Pipe ..... Table 10.1.1, 10.1.6.1, A.10.1.1, A.10.1.6, A.10.2.4, A.10.2.5, A.10.4.1, A.10.6.7, Table A.11.1(a)
Isolation valves 6.6.2

-J-

Joints, underground pipe 10.2.4, 10.6.7, A.10.1.1, A.10.2.4, A.10.6.7
Assembly 10.3.5
Backfilling 10.10.2.6, 10.10.2.7, A.10.10.2.6
Inspection 10.7.2
Leakage 10.10.2.7, A.10.10.2.6
Methods of joining 10.3
Restraint ..... 10.8, A.10.8.1.1 to A.10.8.3.5

-L-

Labeled
Copper tubing A.10.1.1
Definition 3.2.3
Lakes 5.8, A.5.9
Leakage, pipe 10.10.2.7, A.10.10.2.6
Listed
Copper tubing A.10.1.1
Definition 3.2.4, A.3.2.4, C.3.2.2, D.3.2.2

-M-

Maintenance 7.3, 14.1, A.7.3.1, A.7.3.3
Master streams ..... Chap. 9
Measurement, units of 1.5, C.1.4, D.1.4
Meters, water 5.3.2

-N-

Nozzles
Gear control A.9.1
Monitor ..... 1.1.1, 4.1.3(7), 9.1, A.9.1
Sizes of 8.6.2

-O-

Operating tests 10.10.2.4

-P-

Penstocks 5.8, A.5.9
Pipe
Aboveground ..... 10.5.1, Chap. 12, Chap. 13, A.10.5.1
Buried .....*see* Underground pipe
Fire suppression system supply 6.6.2, 13.3
Fittings .....*see* Fittings, pipe
Flushing 10.10.2.1, A.10.10.2.1
Installation .....*see* Installation
Joints .....*see* Joints, underground pipe
Leakage 10.10.2.7, A.10.10.2.6
Protection of 10.6, 12.2, A.10.6.7
Sizes ..... Chap. 13
Testing ..... 10.10, A.10.10.2.1 to A10.10.2.6
Water crossed by 6.5.2, 10.5.2, 10.5.3
Pits, valves in ..... 4.1.3(8), 6.2.9(1), 6.4, Fig. A.5.9(b), A.6.2.9(1), A.6.4.3
Plans 4.1, A.4.1
Plastic [polyethylene, polyvinyl chloride (PVC), chlorinated polyvinyl chloride (CPVC)]
Fittings ..... 10.2.1, Table 10.2.1(a), 10.2.2
Pipe ..... Table 10.1.1, A.10.1.1, A.10.4.1, A.10.10.2.2.1
Plug straps 10.8.3.3, 10.8.3.4
Post indicator valves ..... 5.5, 6.2.5, 6.2.9(2), 6.3, A.6.2.5, A.6.3.1, A.6.3.3.2
Pressure regulating device (definition) 3.3.10
Pressure regulating valves 5.3.1
Private fire hydrants 1.1.1
Definition 3.4.1.3
Domestic use prohibited 8.7
Drainage 7.3.1, 7.3.2, 10.10.2.4.2, A.7.3.1
Dry barrel 10.10.2.4.2
Hose for .....*see* Hose
In hose houses 8.2.2
Hydrostatic testing of pipe, gauges for 10.10.2.2.3
Inspection 10.7.1
Installation ..... 7.3, 10.7.3 to 10.7.5, A.7.3.1, A.7.3.3
Location 7.2, A.7.2.1, A.7.2.3
Marking of ..... Annex D
Operating tests 10.10.2.4.1, 10.10.2.4.2
Testing 14.1
Fire flow tests ..... Annex C
Valves ..... 7.1.1.1 to 7.1.1.3, 7.3.7
Wall hydrants 7.2.4, A.7.2.3
Working plans ..... 4.1.3(9)
Private fire service main (definition) ... 3.3.11, A.3.3.11; *see also* Pipe
Proprietary supervisory service systems 6.6.2, B.3
Public hydrants 7.2.2
Definition 3.4.1.4
Public water systems 5.1, 5.4, 5.5, A.5.1, A.5.4
Pumper outlets (definition) 3.3.12
Pumpers, fire department 7.1.4, A.7.1.4, A.7.2.1, C.4.8
Pumps 5.6, A.5.6
Connections ..... 6.2.9, A.6.2.9(1)
Operating tests 10.10.2.4.4
Sprinkler systems A.10.10.2.2.1
Purpose of standard 1.2

-R-

Rated capacity
Definition 3.3.13, C.3.3.1, D.3.3.1
Hydrants classified in accordance with A.7.1.2, A.7.1.4, D.4
References ..... Chap. 2, C.2, D.2, Annex E
Remote station supervision 6.6.2
Reservoirs 5.8, A.5.9
Residual hydrants (definition) 3.4.1.5
Residual pressure C.4.1.1, C.4.1.3, C.4.1.5, C.4.1.6, C.4.3.3, C.4.3.6, C.4.5.4, C.4.5.8, C.4.10.1.2
Definition 3.3.9.1, C.3.3.2
Restraints ..... 4.1.3(8), 10.7.11, 10.8, A.10.8.1.1 to A.10.8.3.5
Retroactivity of standard 1.3

Copyright National Fire Protection Association
Provided by IHS under license with NFPA
No reproduction or networking permitted without license from IHS
Not for Resale

Rivers 5.8, A.5.9
Rod couplings 10.8.3.4
Rods 10.8.3.1.2, 10.8.3.4, 10.8.3.5, A.10.8.3.5

-S-

Scope of standard 1.1
Screens, water 5.8
Screw threads 5.9.2.1, 5.9.2.2, 7.1.2, 8.1.4.1, 10.3.1, A.7.1.2
Sectional valves 6.5, 6.6.2
Security of valves ..... 6.6, Annex B
Shall (definition) 3.2.5
Should (definition) 3.2.6, C.3.2.3, D.3.2.3
Shutoff valves 5.9.3.2, 6.2.2
SI units 1.5, 11.2, C.1.4, D.1.4
Size of mains 5.2
Sprinkler systems 1.1.1, 5.2.2, 6.6.2, 10.2.2, 12.2.2, 13.2, A.10.10.2.2.1
Standard (definition) 3.2.7
Standpipe and hose systems ..... 1.1.1, 4.1.3(7), 5.2.2, 13.2
Static pressure C.4.1.2, C.4.3.3, C.4.5.4
Definition 3.3.9.2, C.3.3.3
Steel
Fittings ..... Table 10.2.1(a), 10.2.2, 10.3.1, 10.3.2, A.10.2.4, A.10.2.5
Pipe ..... Table 10.1.1, 10.1.2, 10.1.3, 10.1.6.2, 10.3.1, 10.3.2, A.10.1.1, A.10.1.6, A.10.2.4, A.10.2.5, A.10.4.1, Table A.11.1(b)
Strainers, water 5.8
Straps
Plug 10.8.3.3, 10.8.3.4, A.10.8.3.5
Restraint 10.8.3.2, 10.8.3.4, A.10.8.3.5
Supervision, valve ..... 6.6.2, 6.6.3, Annex B

-T-

Tanks, water 5.7
Gravity ..... 6.2.6 to 6.2.8, A.6.2.7, A.6.2.8
Pressure 6.2.6
Tees 10.8.3.2
Tests 14.1
Backflow prevention assemblies 10.10.2.5
Flow tests
Definition 3.3.14.1
Hydrant ..... Annex C
Public water supply 5.1.2
Flushing tests (definition) 3.3.14.2
Hose A.8.1.1, A.8.6.1
Hydrostatic (definition) 3.3.14.3
Underground pipe ..... 10.10, A.10.10.2.1 to A10.10.2.6
Hydrostatic test 10.10.2.2, 10.10.2.3, A.10.2.2.1, A.10.2.2.4
Operating test 10.10.2.4
Valves 10.10.2.4.3
Threads, screw ..... *see* Screw threads
Thrust blocks 10.8.1.1, 10.8.2, A.10.8.1.1, A.10.8.2, A.10.10.2.6

-U-

Underground pipe ..... Chap. 10, A.4.1; *see also* Fittings, pipe; Joints, underground pipe
Backfilling 10.9, 10.10.2.6, 10.10.2.7, A.10.10.2.6
Under buildings ..... 6.5.2, 10.6.1 to 10.6.5
Damage, protection against ..... 10.4.1, 10.5.2 to 10.5.4, 10.6, A.10.4.1, A.10.6.7
Depth of cover 10.4, A.10.4.1
Freezing, protection against ..... 10.4.1, 10.5.2 to 10.5.4, A.10.4.1
Grounding, prohibition on use for 10.6.8
Inspection 10.7.1
Installation 10.7
Leakage 10.10.2.7
Lining 10.1.6, A.10.1.6
Materials 10.1, A.10.1
Under railroads 10.6.6
Restraining fire mains ..... 10.8, A.10.8.1.1 to A.10.8.3.5
Type and class 10.1.4, A.10.1.4
Working pressure 10.1.5
Units of measurement 1.5, C.1.4, D.1.4

-V-

Valves .... 4.1.3(8), Chap. 6; *see also* Check valves; Control valves; Post indicator valves
Hydrants ..... 7.1.1.1 to 7.1.1.3, 7.3.7
Identification 6.6.1, B.4
Inspection 10.7.1
Installation ..... 10.7.3 to 10.7.5, 10.7.11
Locking B.4
Operating tests 10.10.2.4.3
Pressure regulating 5.3.1
Sealing B.4
Shutoff 5.9.3.2, 6.2.2
Supervision ..... 6.6.2, 6.6.3, Annex B
Types 6.1

-W-

Washers 10.8.3.1.4, 10.8.3.4, 10.8.3.5, A.10.8.3.5
Water spray systems 1.1.1, 5.2.2, 13.2
Water supplies ..... Chap. 5
Contamination, protection against 5.4.2
Penstocks, flumes, rivers, lakes or reservoirs 5.8, A.5.9
Pipe sizes and 13.3
Public (waterworks) systems ..... *see* Public water systems
Sprinkler systems 5.2.2, A.10.10.2.2.1
Valves controlling ..... *see* Control valves
For wall hydrants A.7.2.3
Working plans ..... 4.1.3(6)
Waterworks systems ..... *see* Public water systems
Welding 10.3.2
Wet barrel hydrant (definition) 3.4.1.6

Copyright National Fire Protection Association
Provided by IHS under license with NFPA
No reproduction or networking permitted without license from IHS

Not for Resale

Sequence of Events Leading to Issuance of an NFPA Committee Document

Step 1: Call for Proposals

- Proposed new Document or new edition of an existing Document is entered into one of two yearly revision cycles, and a Call for Proposals is published.

Step 2: Report on Proposals (ROP)

- Committee meets to act on Proposals, to develop its own Proposals, and to prepare its Report.
- Committee votes by written ballot on Proposals. If two-thirds approve, Report goes forward. Lacking two-thirds approval, Report returns to Committee.
- Report on Proposals (ROP) is published for public review and comment.

Step 3: Report on Comments (ROC)

- Committee meets to act on Public Comments to develop its own Comments, and to prepare its report.
- Committee votes by written ballot on Comments. If two-thirds approve, Report goes forward. Lacking two-thirds approval, Report returns to Committee.
- Report on Comments (ROC) is published for public review.

Step 4: Technical Report Session

- "*Notices of intent to make a motion"* are filed, are reviewed, and valid motions are certified for presentation at the Technical Report Session. ("Consent Documents" that have no certified motions bypass the Technical Report Session and proceed to the Standards Council for issuance.)
- NFPA membership meets each June at the Annual Meeting Technical Report Session and acts on Technical Committee Reports (ROP and ROC) for Documents with "certified amending motions."
- Committee(s) vote on any amendments to Report approved at NFPA Annual Membership Meeting.

Step 5: Standards Council Issuance

- Notification of intent to file an appeal to the Standards Council on Association action must be filed within 20 days of the NFPA Annual Membership Meeting.
- Standards Council decides, based on all evidence, whether or not to issue Document or to take other action, including hearing any appeals.

Committee Membership Classifications

The following classifications apply to Technical Committee members and represent their principal interest in the activity of the committee.

M *Manufacturer:* A representative of a maker or marketer of a product, assembly, or system, or portion thereof, that is affected by the standard.

U *User:* A representative of an entity that is subject to the provisions of the standard or that voluntarily uses the standard.

I/M *Installer/Maintainer:* A representative of an entity that is in the business of installing or maintaining a product, assembly, or system affected by the standard.

L *Labor:* A labor representative or employee concerned with safety in the workplace.

R/T *Applied Research/Testing Laboratory:* A representative of an independent testing laboratory or independent applied research organization that promulgates and/or enforces standards.

E *Enforcing Authority:* A representative of an agency or an organization that promulgates and/or enforces standards.

I *Insurance:* A representative of an insurance company, broker, agent, bureau, or inspection agency.

C *Consumer:* A person who is, or represents, the ultimate purchaser of a product, system, or service affected by the standard, but who is not included in the *User* classification.

SE *Special Expert:* A person not representing any of the previous classifications, but who has a special expertise in the scope of the standard or portion thereof.

NOTES;
1. "Standard" connotes code, standard, recommended practice, or guide.
2. A representative includes an employee.
3. While these classifications will be used by the Standards Council to achieve a balance for Technical Committees, the Standards Council may determine that new classifications of members or unique interests need representation in order to foster the best possible committee deliberations on any project. In this connection, the Standards Council may make appointments as it deems appropriate in the public interest, such as the classification of "Utilities" in the National Electrical Code Committee.
4. Representatives of subsidiaries of any group are generally considered to have the same classification as the parent organization.

Copyright National Fire Protection Association
Provided by IHS under license with NFPA
No reproduction or networking permitted without license from IHS
Not for Resale

NFPA Technical Committee Document Proposal Form

NOTE: All Proposals must be received by 5:00 p.m. EST/EDST on the published Proposal Closing Date.

For further information on the standards-making process, please contact the Codes and Standards Administration at 617-984-7249.

For technical assistance, please call NFPA at 617-770-3000.

FOR OFFICE USE ONLY

Log #:

Date Rec'd:

Please indicate in which format you wish to receive your ROP/ROC ☐ **electronic** ☐ **paper** ☒ **download**
(Note: If choosing the download option, you must view the ROP/ROC from our website; no copy will be sent to you.)

Date April 1, 200X **Name** John J. Doe **Tel. No.** 716-555-1234

Company Air Canada Pilot's Association

Street Address 123 Summer Street Lane **City** Lewiston **State** NY **Zip** 14092

Please indicate organization represented (if any)

1. (a) NFPA Document Title National Fuel Gas Code **NFPA No. & Year** 54, 200X Edition

(**b) Section/Paragraph** 3.3

2. Proposal Recommends (check one): ☐ new text ☒ revised text ☐ deleted text

3. Proposal (include proposed new or revised wording, or identification of wording to be deleted): [Note: Proposed text should be in legislative format, i.e., use underscore to denote wording to be inserted (inserted wording) and strike-through to denote wording to be deleted (~~deleted wording~~).]

Revise definition of effective ground-fault current path to read:

3.3.78 Effective Ground-Fault Current Path. An intentionally constructed, permanent, low impedance electrically conductive path designed and intended to carry ~~underground~~ electric fault current ~~conditions~~ from the point of a ground fault on a wiring system to the electrical supply source.

4. Statement of Problem and Substantiation for Proposal: (Note: State the problem that would be resolved by your recommendation; give the specific reason for your Proposal, including copies of tests, research papers, fire experience, etc. If more than 200 words, it may be abstracted for publication.)

Change uses proper electrical terms.

5. Copyright Assignment

(a) ☐ **I am the author of the text or other material (such as illustrations, graphs) proposed in this Proposal.**

(b) ☒ **Some or all of the text or other material proposed in this Proposal was not authored by me. Its source is as follows** (please identify which material and provide complete information on its source)**:**

ABC Co.

I hereby grant and assign to NFPA all and full rights in copyright in this Proposal and understand that I acquire no rights in any publication of NFPA in which this Proposal in this or another similar or analogous form is used. Except to the extent that I do not have authority to make an assignment in materials that I have identified in (b) above, I hereby warrant that I am the author of this Proposal and that I have full power and authority to enter into this assignment.

Signature (Required)

PLEASE USE SEPARATE FORM FOR EACH PROPOSAL • NFPA Fax: (617) 770-3500
Mail to: Secretary, Standards Council, National Fire Protection Association, 1 Batterymarch Park, Quincy, MA 02169-7471

8/29/2006

SAMPLE

Copyright National Fire Protection Association
Provided by IHS under license with NFPA
No reproduction or networking permitted without license from IHS
Not for Resale

NFPA Technical Committee Document Proposal Form

NOTE: All Proposals must be received by 5:00 p.m. EST/EDST on the published Proposal Closing Date.

For further information on the standards-making process, please contact the Codes and Standards Administration at 617-984-7249.

For technical assistance, please call NFPA at 617-770-3000.

FOR OFFICE USE ONLY

Log #: _____

Date Rec'd: _____

Please indicate in which format you wish to receive your ROP/ROC ☐ electronic ☐ paper ☐ download
(Note: If choosing the download option, you must view the ROP/ROC from our website; no copy will be sent to you.)

Date _____ **Name** _____ **Tel. No.** _____

Company _____

Street Address _____ **City** _____ **State** _____ **Zip** _____

Please indicate organization represented (if any) _____

1. (a) NFPA Document Title _____ **NFPA No. & Year** _____

(b) Section/Paragraph _____

2. Proposal Recommends (check one): ☐ new text ☐ revised text ☐ deleted text

3. Proposal (include proposed new or revised wording, or identification of wording to be deleted): [Note: Proposed text should be in legislative format, i.e., use underscore to denote wording to be inserted (inserted wording) and strike-through to denote wording to be deleted (~~deleted wording~~).]

4. Statement of Problem and Substantiation for Proposal: (Note: State the problem that would be resolved by your recommendation; give the specific reason for your Proposal, including copies of tests, research papers, fire experience, etc. If more than 200 words, it may be abstracted for publication.)

5. Copyright Assignment

(a) ☐ I am the author of the text or other material (such as illustrations, graphs) proposed in this Proposal.

(b) ☐ Some or all of the text or other material proposed in this Proposal was not authored by me. Its source is as follows (please identify which material and provide complete information on its source)**:**

_____

I hereby grant and assign to NFPA all and full rights in copyright in this Proposal and understand that I acquire no rights in any publication of NFPA in which this Proposal in this or another similar or analogous form is used. Except to the extent that I do not have authority to make an assignment in materials that I have identified in (b) above, I hereby warrant that I am the author of this Proposal and that I have full power and authority to enter into this assignment.

Signature (Required) _____

PLEASE USE SEPARATE FORM FOR EACH PROPOSAL • NFPA Fax: (617) 770-3500

Mail to: Secretary, Standards Council, National Fire Protection Association, 1 Batterymarch Park, Quincy, MA 02169-7471

8/29/2006

Copyright National Fire Protection Association
Provided by IHS under license with NFPA
No reproduction or networking permitted without license from IHS
Not for Resale