NFPA 230

Standard for the Fire Protection of Storage

2003 Edition

NFPA, 1 Batterymarch Park, PO Box 9101, Quincy, MA 02269-9101
An International Codes and Standards Organization

NFPA License Agreement

This document is copyrighted by the National Fire Protection Association (NFPA), 1 Batterymarch Park, Quincy, MA 02269-9101 USA.
All rights reserved.

NFPA grants you a license as follows: The right to download an electronic file of this NFPA document for temporary storage on one computer for purposes of viewing and/or printing one copy of the NFPA document for individual use. Neither the electronic file nor the hard copy print may be reproduced in any way. In addition, the electronic file may not be distributed elsewhere over computer networks or otherwise. The hard copy print may only be used personally or distributed to other employees for their internal use within your organization.

--`,,,`-`-`,,`,,`,`,,`---

Copyright National Fire Protection Association
Provided by IHS under license with NFPA
No reproduction or networking permitted without license from IHS

Not for Resale

IMPORTANT NOTICES AND DISCLAIMERS CONCERNING THIS DOCUMENT

Notice and Disclaimer of Liability Concerning the Use of NFPA Documents

NFPA codes, standards, recommended practices, and guides, of which the document contained herein is one, are developed through a consensus standards development process approved by the American National Standards Institute. This process brings together volunteers representing varied viewpoints and interests to achieve consensus on fire and other safety issues. While the NFPA administers the process and establishes rules to promote fairness in the development of consensus, it does not independently test, evaluate, or verify the accuracy of any information or the soundness of any judgments contained in its codes and standards.

The NFPA disclaims liability for any personal injury, property or other damages of any nature whatsoever, whether special, indirect, consequential or compensatory, directly or indirectly resulting from the publication, use of, or reliance on this document. The NFPA also makes no guaranty or warranty as to the accuracy or completeness of any information published herein.

In issuing and making this document available, the NFPA is not undertaking to render professional or other services for or on behalf of any person or entity. Nor is the NFPA undertaking to perform any duty owed by any person or entity to someone else. Anyone using this document should rely on his or her own independent judgment or, as appropriate, seek the advice of a competent professional in determining the exercise of reasonable care in any given circumstances.

The NFPA has no power, nor does it undertake, to police or enforce compliance with the contents of this document. Nor does the NFPA list, certify, test or inspect products, designs, or installations for compliance with this document. Any certification or other statement of compliance with the requirements of this document shall not be attributable to the NFPA and is solely the responsibility of the certifier or maker of the statement.

Important Notices and Disclaimers continued on inside back cover.

--`,,,-`-`,,`,,`,`,,`---

Copyright National Fire Protection Association
Provided by IHS under license with NFPA
No reproduction or networking permitted without license from IHS

Not for Resale

IMPORTANT NOTICES AND DISCLAIMERS CONCERNING NFPA DOCUMENTS

(Continued from inside front cover)

ADDITIONAL NOTICES AND DISCLAIMERS

Updating of NFPA Documents

Users of NFPA codes, standards, recommended practices, and guides should be aware that these documents may be superseded at any time by the issuance of new editions or may be amended from time to time through the issuance of Tentative Interim Amendments. An official NFPA document at any point in time consists of the current edition of the document together with any Tentative Interim Amendments and any Errata then in effect. In order to determine whether a given document is the current edition and whether it has been amended through the issuance of Tentative Interim Amendments or corrected through the issuance of Errata, consult appropriate NFPA publications such as the National Fire Codes Subscription Service, visit the NFPA website at www.nfpa.org, or contact the NFPA at the address listed below.

Interpretations of NFPA Documents

A statement, written or oral, that is not processed in accordance with Section 6 of the Regulations Governing Committee Projects shall not be considered the official position of NFPA or any of its Committees and shall not be considered to be, nor be relied upon as, a Formal Interpretation.

Patents

The NFPA does not take any position with respect to the validity of any patent rights asserted in connection with any items which are mentioned in or are the subject of NFPA codes, standards, recommended practices, and guides, and the NFPA disclaims liability for the infringement of any patent resulting from the use of or reliance on these documents. Users of these documents are expressly advised that determination of the validity of any such patent rights, and the risk of infringement of such rights, is entirely their own responsibility.

NFPA adheres to applicable policies of the American National Standards Institute with respect to patents. For further information, contact the NFPA at the address listed below.

Laws & Regulations

Users of these documents should consult applicable federal, state, and local laws and regulations. NFPA does not, by the publication of its codes, standards, recommended practices, and guides, intend to urge action that is not in compliance with applicable laws, and these documents may not be construed as doing so.

Copyrights

This document is copyrighted by the NFPA. It is made available for a wide variety of both public and private uses. These include both use, by reference, in laws and regulations, and use in private self-regulation, standardization, and the promotion of safe practices and methods. By making this document available for use and adoption by public authorities and private users, the NFPA does not waive any rights in copyright to this document.

Adoption by Reference. Use of NFPA documents for regulatory purposes should be accomplished through adoption by reference. The term "adoption by reference" means the citing of title, edition and publishing information only. Any deletions, additions, and changes desired by the adopting authority should be noted separately in the adopting instrument. In order to assist NFPA in following the uses made of its documents, adopting authorities are requested to notify the NFPA (Attention: Secretary, Standards Council) in writing of such use. For technical assistance and questions concerning adoption of NFPA documents, contact NFPA at the address below.

For Further Information

All questions or other communications relating to NFPA codes, standards, recommended practices, and guides and all requests for information on NFPA procedures governing its codes and standards development process, including information on the procedures for requesting Formal Interpretations, for proposing Tentative Interim Amendments, and for proposing revisions to NFPA documents during regular revision cycles, should be sent to NFPA headquarters, addressed to the attention of the Secretary, Standards Council, NFPA, 1 Batterymarch Park, P.O. Box 9101, Quincy, MA 02269-9101.

For more information about NFPA, visit the NFPA website at www.nfpa.org.

Copyright National Fire Protection Association
Provided by IHS under license with NFPA
No reproduction or networking permitted without license from IHS
Not for Resale

Copyright © 2003, National Fire Protection Association, All Rights Reserved

NFPA 230

Standard for the

Fire Protection of Storage

2003 Edition

This edition of NFPA 230, *Standard for the Fire Protection of Storage*, was prepared by the Technical Committee on General Storage and acted on by NFPA at its November Association Technical Meeting held November 16–20, 2002, in Atlanta, GA. It was issued by the Standards Council on January 17, 2003, with an effective date of February 6, 2003, and supersedes all previous editions.

This edition of NFPA 230 was approved as an American National Standard on January 17, 2003.

Origin and Development of NFPA 230

The creation of NFPA 230 is the result of a Standards Council directive to consolidate information pertaining to sprinkler systems. The portions of NFPA 231, 231C, 231D, 231E, and 231F containing sprinkler system information were moved into NFPA 13, *Standard for the Installation of Sprinkler Systems*. As part of this effort, nonsprinkler system-related information pertaining to storage operations that was previously located in NFPA 231, 231C, 231D, 231E, and 231F and all of NFPA 46 was redesignated as NFPA 230 and consolidated to minimize duplication of fire protection requirements.

NFPA 230 was revised for the 2003 edition to comply with the latest edition of the NFPA *Manual of Style*. The previous Appendix E material on the outdoor storage of forest products was incorporated into the standard, and a separate chapter on outdoor storage of idle pallets was formed from consolidation of previous NFPA 230 provisions.

The 2003 edition is dedicated to Salvatore Gitto and his family. Mr. Gitto was a victim of the tragedies of September 11, 2001, and a decade-long volunteer as a member of NFPA Technical Committees responsible for fire protection documents addressing storage.

Copyright National Fire Protection Association
Provided by IHS under license with NFPA
No reproduction or networking permitted without license from IHS
Not for Resale

Technical Committee on General Storage

Christopher T. Lummus, *Chair*
Insurance Services Office, Inc., TX [I]

Albert W. Reed, *Secretary*
Reed Fire Protection Engineering, TX [SE]

Kerry M. Bell, Underwriters Laboratories Inc., IL [RT]
Michael H. Blumenthal, Rubber Manufacturers Association, DC [M]
Robert B. Combs, Marsh USA, Inc., WA [I]
Warde P. Comeaux, Jr., Global Fire Protection Consulting, Inc., CA [U]
Rep. Professional Records & Information Services Management
James S. Crews, Fireman's Fund Insurance Company, GA [I]
T. E. (Ted) Dalferes, Carter and Burgess, Inc., TX [IM]
Rep. American Fire Sprinkler Association, Inc.
Phillip A. Davis, Kemper Insurance Companies, IL [I]
James G. Gallup, The RJA Group, Inc., AZ [SE]
Thomas Goonan, Tom Goonan Associates, VA [SE]
Stephen R. Hoover, Stephen R. Hoover Associates, IL [SE]
Richard S. Johnson, Owens Illinois-Retainer, SC [U]
Russell B. Leavitt, TVA Fire & Life Safety, Inc., CA [IM]
Rep. American Fire Sprinkler Association, Inc.
Robert Malanga, Union Camp Corporation, NJ [U]
Kevin Maughan, Central Sprinkler Company, PA [IM]
Rodney A. McPhee, Canadian Wood Council, Canada [M]
Jennifer Nelson, AT&T - EH&S, NY [U]
Michael T. Newman, Johnson & Johnson, NJ [U]
Rep. NFPA Industrial Fire Protection Section
Gerald W. O'Rourke, O'Rourke & Company, CA [SE]
Garner A. Palenske, Schirmer Engineering Corporation, CA [I]
Arthur H. Roede, Welwyn Associates, Inc., DE [SE]
Michael J. Rzeznik, Gage-Babcock & Associates, Inc., NY [SE]
Todd E. Schumann, GE Global Asset Protection Services, IL [I]
Peter A. Smith, International Paper Company, TN [U]
Robert Spaulding, FM Global, MA [I]
Jack Thacker, Allan Automatic Sprinkler Corp. of So. California, CA [IM]
Rep. National Fire Sprinkler Association

Alternates

James J. Convery, Gage-Babcock & Associates, Inc., VA [SE]
(Alt. to M. J. Rzeznik)
J. Grayson Gilbert, GE Global Asset Protection Services, GA [I]
(Alt. to T. E. Schumann)
Joseph B. Hankins, Jr., FM Global, MA [I]
(Alt. to R. Spaulding)
Roland J. Huggins, American Fire Sprinkler Association, Inc., TX [IM]
(Alt. to R. B. Leavitt)
Richard E. Hughey, ISO Commercial Risk Services, NJ [I]
(Alt. to C. T. Lummus)
Kenneth E. Isman, National Fire Sprinkler Association, NY [IM]
(Alt. to J. Thacker)
Donald C. Moeller, The RJA Group, Inc., CA [SE]
(Alt. to J. G. Gallup)
Robert V. Scholes, Fireman's Fund Insurance Company, CA [I]
(Alt. to J. S. Crews)
Daniel R. Steppan, Underwriters Laboratories Inc., IL [RT]
(Alt. to K. M. Bell)
Terry L. Victor, TYCO/SimplexGrinnell, MD [IM]
(Alt. to K. Maughan)

Nonvoting

Martin M. Brown, Laguna Woods, CA
(Member Emeritus)
Sultan M. Javeri, France, [IM]

Dana R. Haagensen, NFPA Staff Liaison

Committee Scope: This Committee shall have primary responsibility for documents on safeguarding general warehousing and commodities against fire where stored indoors or outdoors. This Committee does not cover storage that is specifically covered by other NFPA standards.

This list represents the membership at the time the Committee was balloted on the final text of this edition. Since that time, changes in the membership may have occurred. A key to classifications is found at the back of the document.

NOTE: Membership on a committee shall not in and of itself constitute an endorsement of the Association or any document developed by the committee on which the member serves.

Copyright National Fire Protection Association
Provided by IHS under license with NFPA
No reproduction or networking permitted without license from IHS
Not for Resale

Contents

Chapter 1 Administration **230–** 4
1.1 Scope **230–** 4
1.2 Purpose **230–** 4
1.3 Retroactivity **230–** 4
1.4 Equivalency **230–** 4
1.5 Units **230–** 4

Chapter 2 Referenced Publications **230–** 4
2.1 General **230–** 4
2.2 NFPA Publications **230–** 5
2.3 Other Publication **230–** 5

Chapter 3 Definitions **230–** 5
3.1 General **230–** 5
3.2 NFPA Official Definitions **230–** 5
3.3 General Definitions **230–** 5

Chapter 4 General **230–** 7
4.1 Classification of Commodities **230–** 7
4.2 Usage Changes **230–** 9

Chapter 5 General Requirements **230–** 9
5.1 Building Construction **230–** 9
5.2 Storage Arrangement **230–** 9
5.3 Fire Protection — General **230–** 9
5.4 Building Equipment, Maintenance, and Operations **230–**10

Chapter 6 Protection of Palletized, Solid Pile, Bin Box, and On-Shelf Storage **230–**11
6.1 Application **230–**11

Chapter 7 Protection of Rack Storage **230–**11
7.1 Application **230–**11
7.2 Building Construction **230–**11
7.3 Storage Arrangement **230–**11

Chapter 8 Protection of Rubber Tires **230–**11
8.1 Application **230–**11
8.2 Building Arrangement **230–**11
8.3 Storage Arrangement **230–**12
8.4 Fire Protection **230–**12

Chapter 9 Protection of Roll Paper **230–**12
9.1 Application **230–**12
9.2 Building Construction **230–**12
9.3 Storage Arrangement **230–**12

Chapter 10 Reserved **230–**12

Chapter 11 Protection of Storage of Forest Products **230–**12
11.1 General **230–**12
11.2 General Fire Protection **230–**12
11.3 Outside Storage of Lumber and Wood Panels — Retail and Wholesale Storage Yards **230–**13
11.4 Outside Storage of Lumber and Wood Panels — Wood Processing Facilities **230–**14
11.5 Outside Storage of Ties, Poles, and Posts — Pressure-Treating Plants **230–**14
11.6 Outside Storage of Wood Chips and Hogged Material **230–**14
11.7 Outside Storage of Logs **230–**15

Chapter 12 Storage of Idle Pallets **230–**16
12.1 General **230–**16
12.2 Indoor Storage **230–**16
12.3 Outdoor Storage **230–**16

Chapter 13 Reserved **230–**17

Chapter 14 Reserved **230–**17

Annex A Explanatory Material **230–**17

Annex B Protection of Outdoor Storage **230–**29

Annex C Explanation of Rack Storage Test Data and Procedures **230–**31

Annex D Protection of Baled Cotton History of Guidelines **230–**34

Annex E Recommendations for Fighting Rubber Tire Fires in Sprinklered Buildings **230–**43

Annex F Guidelines for Outdoor Storage of Scrap Tires **230–**45

Annex G Informational References **230–**48

Index **230–**49

Copyright National Fire Protection Association
Provided by IHS under license with NFPA
No reproduction or networking permitted without license from IHS
Not for Resale

NFPA 230

Standard for the

Fire Protection of Storage

2003 Edition

NOTICE: An asterisk (*) following the number or letter designating a paragraph indicates that explanatory material on the paragraph can be found in Annex A.

Changes other than editorial are indicated by a vertical rule beside the paragraph, table, or figure in which the change occurred. These rules are included as an aid to the user in identifying changes from the previous edition. Where one or more complete paragraphs have been deleted, the deletion is indicated by a bullet (•) between the paragraphs that remain.

A reference in brackets [ ] following a section or paragraph indicates material that has been extracted from another NFPA document. As an aid to the user, Annex G lists the complete title and edition of the source documents for both mandatory and nonmandatory extracts. Editorial changes to extracted material consist of revising references to an appropriate division in this document or the inclusion of the document number with the division number when the reference is to the original document. Requests for interpretations or revisions of extracted text shall be sent to the technical committee responsible for the source document.

Information on referenced publications can be found in Chapter 2 and Annex G.

Chapter 4 is extracted from NFPA 13, *Standard for the Installation of Sprinkler Systems*.

Chapter 1 Administration

1.1 Scope.

1.1.1 This standard shall apply to the indoor and outdoor storage of materials representing the broad range of combustibles, including plastics, forest products, rubber tires, scrap tires, baled cotton, and roll paper.

1.1.2 Storage configurations included in the scope of this standard shall include palletized storage, solid-piled storage, and storage in bin boxes, on shelves, or on racks.

1.1.3 Outside storage configurations of forest products included in the scope of this standard shall include stacked storage, piles, and cold decks.

1.1.4 This standard shall not apply to the following:

(1) Unsprinklered buildings, except the following :
  (a) Buildings containing baled cotton storage
  (b) Certain rack storage arrangements protected by high-expansion foam systems in accordance with this standard.
(2) Storage of commodities that, with their packaging and storage aids, would be classified as noncombustible
(3) Unpackaged bulk materials such as grain, coal, or similar commodities but excluding wood chips and sawdust, which are addressed in Section 11.6
(4) Inside or outside storage of commodities covered by other NFPA standards, except where specifically mentioned herein (e.g., pyroxylin plastics)
(5) Storage of high-hazard materials covered by other NFPA standards, except where specifically mentioned herein
(6) Storage on plastic shelves on racks
(7) *Miscellaneous tire storage
(8) Forest products stored on piers, wharves, and raised platforms, as addressed in NFPA 307, *Standard for the Construction and Fire Protection of Marine Terminals, Piers, and Wharves*

1.2 Purpose. The purpose of this standard shall be to provide a reasonable degree of protection based on accepted engineering principles, tests, data, and field experience.

1.3 Retroactivity. The provisions of this standard reflect a consensus of what is necessary to provide an acceptable degree of protection from the hazards addressed in this standard at the time the standard was issued.

1.3.1 Unless otherwise specified, the provisions of this standard shall not apply to facilities, equipment, structures, or installations that existed or were approved for construction or installation prior to the effective date of the standard. Where specified, the provisions of this standard shall be retroactive.

1.3.2 In those cases where the authority having jurisdiction determines that the existing situation presents an unacceptable degree of risk, the authority having jurisdiction shall be permitted to apply retroactively any portions of this standard deemed appropriate.

1.3.3 The retroactive requirements of this standard shall be permitted to be modified if their application clearly would be impractical in the judgment of the authority having jurisdiction, and only where it is clearly evident that a reasonable degree of safety is provided.

1.4 Equivalency. Nothing in this standard shall be intended to restrict new technologies or alternate arrangements, provided that the level of protection prescribed by the standard is not lowered.

1.5* Units.

1.5.1 Metric units of measurement in this standard shall be in accordance with the modernized metric system known as the International System of Units (SI).

1.5.2 The liter unit shall be permitted to be used in this standard.

1.5.3* Either all metric values or all English values shall be used in the application of this standard.

Chapter 2 Referenced Publications

2.1 General. The following documents or portions thereof listed in this chapter are referenced within this standard and shall be considered part of the requirements of this document.

2.2 NFPA Publications. National Fire Protection Association, 1 Batterymarch Park, P.O. Box 9101, Quincy, MA 02269-9101.

NFPA 1, *Uniform Fire Code™*, 2003 edition.

NFPA 10, *Standard for Portable Fire Extinguishers,* 2002 edition.

NFPA 11A, *Standard for Medium- and High-Expansion Foam Systems,* 2002 edition.

NFPA 13, *Standard for the Installation of Sprinkler Systems,* 2002 edition.

NFPA 24, *Standard for the Installation of Private Fire Service Mains and Their Appurtenances,* 2002 edition.

Copyright National Fire Protection Association
Provided by IHS under license with NFPA
No reproduction or networking permitted without license from IHS
Not for Resale

NFPA 25, *Standard for the Inspection, Testing, and Maintenance of Water-Based Fire Protection Systems,* 2002 edition.

NFPA 30, *Flammable and Combustible Liquids Code,* 2000 edition.

NFPA 51B, *Standard for Fire Prevention During Welding, Cutting, and Other Hot Work,* 1999 edition.

NFPA 70, *National Electrical Code®,* 2002 edition.

NFPA 72®, National Fire Alarm Code®, 2002 edition.

NFPA 91, *Standard for Exhaust Systems for Air Conveying of Vapors, Gases, Mists, and Noncombustible Particulate Solids,* 1999 edition.

NFPA *101®, Life Safety Code®,* 2003 edition.

NFPA 220, *Standard on Types of Building Construction,* 1999 edition.

NFPA 221, *Standard for Fire Walls and Fire Barrier Walls,* 2000 edition.

NFPA 307, *Standard for the Construction and Fire Protection of Marine Terminals, Piers, and Wharves,* 2000 edition.

NFPA 505, *Fire Safety Standard for Powered Industrial Trucks Including Type Designations, Areas of Use, Conversions, Maintenance, and Operation,* 2002 edition.

NFPA 601, *Standard for Security Services in Fire Loss Prevention,* 2000 edition.

2.3 Other Publication.

2.3.1 ASHRAE Publication. American Society of Heating, Refrigerating and Air Conditioning Engineers, Inc., 1791 Tullie Circle, NE, Atlanta, GA 30329-2305.

ASHRAE 15, *Safety Code for Mechanical Refrigeration*, 1994.

Chapter 3 Definitions

3.1 General. The definitions contained in this chapter shall apply to the terms used in this standard. Where terms are not included, common usage of the terms shall apply.

3.2 NFPA Official Definitions.

3.2.1* Approved. Acceptable to the authority having jurisdiction.

3.2.2* Authority Having Jurisdiction (AHJ). The organization, office, or individual responsible for approving equipment, materials, an installation, or a procedure.

3.2.3 Labeled. Equipment or materials to which has been attached a label, symbol, or other identifying mark of an organization that is acceptable to the authority having jurisdiction and concerned with product evaluation, that maintains periodic inspection of production of labeled equipment or materials, and by whose labeling the manufacturer indicates compliance with appropriate standards or performance in a specified manner.

3.2.4* Listed. Equipment, materials, or services included in a list published by an organization that is acceptable to the authority having jurisdiction and concerned with evaluation of products or services, that maintains periodic inspection of production of listed equipment or materials or periodic evaluation of services, and whose listing states that either the equipment, material, or service meets appropriate designated standards or has been tested and found suitable for a specified purpose.

3.2.5 Shall. Indicates a mandatory requirement.

3.2.6 Should. Indicates a recommendation or that which is advised but not required.

3.2.7 Standard. A document, the main text of which contains only mandatory provisions using the word "shall" to indicate requirements and which is in a form generally suitable for mandatory reference by another standard or code or for adoption into law. Nonmandatory provisions shall be located in an appendix or annex, footnote, or fine-print note and are not to be considered a part of the requirements of a standard.

3.3 General Definitions.

3.3.1* Aisle Width. The horizontal dimension between the face of the loads in racks under consideration. *(See Figure A.3.3.1.)*

3.3.2 Alleyway. An accessible clear space between storage piles or groups of piles suitable for housekeeping operations, visual inspection of piling areas, and initial fire-fighting operations.

3.3.3* Available Height for Storage. The maximum height at which commodities can be stored above the floor and still maintain necessary clearance from structural members and the required clearance below sprinklers. [**13:**3.9]

3.3.4* Baled Cotton. A natural seed fiber wrapped and secured in industry-accepted materials, usually consisting of burlap, woven polypropylene, or sheet polyethylene, and secured with steel, synthetic, or wire bands, or wire; also includes linters (lint removed from the cottonseed) and motes (residual materials from the ginning process).

3.3.4.1 ***Fire-Packed Baled Cotton.*** A cotton bale within which a fire has been packed as a result of a process, ginning being the most frequent cause.

3.3.4.2 ***Naked Cotton Bale.*** An unwrapped cotton bale secured with wire or steel straps.

3.3.5 Block. A basic yard storage unit for baled cotton comprising multiple-row storage with clear spaces on all sides.

3.3.6 Bulkhead. A vertical barrier across a rack.

3.3.7 Burn-It. A fire-fighting strategy that allows for the free-burn of a tire fire.

3.3.8 Bury-It. A fire-fighting strategy in which a tire pile is buried with soil, sand, gravel, cement dust, or other cover material.

3.3.9* Chip. A wood chip of various species used in the manufacture of pulp.

3.3.10 Clear Space. An area that is free of combustible materials but that can contain noncombustible materials that cannot transmit an exposure fire.

3.3.11 Clearance. The distance from the top of storage to the ceiling sprinkler deflectors. [**13:**3.9]

3.3.12 Cold Cotton. Baled cotton that is five or more days old after the ginning process.

3.3.13 Cold Deck. A single ranked pile of logs with individual logs of regular or irregular length usually 6.1 m (20 ft) to 15.2 m (50 ft) long, but greater than 2.4 m (8 ft) long.

3.3.14 Column (Paper). A single vertical stack of rolls of paper.

3.3.15 Commodity. The combination of products, packing material, and container that determines commodity classification.

3.3.16* Compartmented. The rigid separation of the products in a container by dividers that form a stable unit under fire conditions.

Copyright National Fire Protection Association
Provided by IHS under license with NFPA
No reproduction or networking permitted without license from IHS
Not for Resale

3.3.17* Container (Shipping, Master, or Outer Container). A receptacle strong enough, by reason of material, design, and construction, to be shipped safely without further packaging.

3.3.18* Conventional Pallets. A material-handling aid designed to support a unit load with openings to provide access for material-handling devices. *(See Figure A.3.3.18.)*

3.3.19 Cordwood. Logs 2.4 m (8 ft) or less in length customarily intended for pulpwood or fuel uses.

3.3.20 Core. The central tube around which paper is wound to form a roll.

3.3.21 Driveway. A clear space suitable for fire-fighting operations by motorized fire apparatus.

3.3.22* Encapsulated. A method of packaging that consists of a plastic sheet that completely encloses the sides and top of a pallet load that contains a combustible commodity or a combustible package or a group of combustible commodities or combustible packages or combustible commodities that are individually wrapped in plastic sheeting and stored exposed in a pallet load.

3.3.23 Fines. Small pieces or splinters of wood by-products that can pass through a 6.4-mm (0.25-in.) screen.

3.3.24 Flameover. A fire that spreads rapidly over the exposed linty surface of cotton bales.

3.3.25 Forecasting. The ability to predict fire progression in a scrap tire storage location prior to the completion of the inventory fire break using heavy equipment.

3.3.26 Height.

3.3.26.1 ***Ceiling Height.*** The distance between the floor and the underside of the ceiling above (or roof deck) within the storage area.

3.3.26.2 ***Roof Height.*** The distance between the floor and the underside of the roof deck within a storage area.

3.3.27 Hogged Material. Mill waste consisting mainly of hogged bark but possibly including a mixture of bark, chips, dust, or other by-products from trees; also includes material designated as hogged fuel.

3.3.28 Horizontal Channel. Any uninterrupted space in excess of 1.5 m (5 ft) in length between horizontal layers of stored tires that is formed by pallets, shelving, racks, or other storage arrangements.

3.3.29 Log. Felled tree from which all the branches have been removed.

3.3.30 Lumber. Wood from felled trees having a section produced by lengthwise sawing or chipping of logs or other solid wood of large dimensions and possible crosscutting and/or further machining to obtain a certain size and includes boards, dimension lumber, timber and similar wood products.

3.3.31 Noncombustible. Commodities, packaging, or storage aids that do not ignite, burn, or liberate flammable gases when heated to a temperature of 749°C (1380°F) for 5 minutes.

3.3.32 Packaging. A commodity wrapping, cushioning, or container. [**13:**3.9]

3.3.33 Paper. The general term for felted sheets made from natural fibrous materials, usually vegetable but sometimes mineral or animal, and formed on a fine wire screen by means of water suspension.

3.3.34* Rack. Any combination of vertical, horizontal, and diagonal members that supports stored materials.

3.3.34.1 ***Double-Row Racks.*** Two single-row racks placed back-to-back having a combined width up to 3.7 m (12 ft), with aisles of at least 1.1 m (3.5 ft) on each side. [**13:**3.10]

3.3.34.2* ***Movable Racks.*** Racks on fixed rails or guides. [**13:**3.10]

3.3.34.3 ***Multiple-Row Racks.*** Racks greater than 3.7 m (12 ft) wide or single- or double-row racks, separated by aisles less than 1.1 m (3.5 ft) wide having an overall width greater than 3.7 m (12 ft). [**13:**3.10]

3.3.34.4* ***Portable Racks.*** Racks that are not fixed in place. [**13:**3.10]

3.3.34.5 ***Single-Row Racks.*** Racks that have no longitudinal flue space and that have a width up to 1.8 m (6 ft), with aisles at least 1.1 m (3.5 ft) from other storage. [**13:**3.10]

3.3.35 Ranked Log Piles. Piles of logs evenly arranged by conveyor, crane, or other means.

3.3.36 Row. A minimum yard storage unit comprised of adjoining cotton bales.

3.3.37 Solid Shelving. Solid, slatted, and other types of shelving located within racks that obstruct sprinkler water penetration down through the racks. [**13:**3.10]

3.3.38 Storage.

3.3.38.1 ***Banded Storage.*** Paper rolls provided with a circumferential steel strap 9.5 mm (⅜ in.) or wider, at each end of the roll.

3.3.38.2 ***Banded Tire Storage.*** Storage in which a number of tires are strapped together.

3.3.38.3 ***Bin Box Storage.*** Storage in five-sided wood, metal, or cardboard boxes with open face on the aisles that are self-supporting or supported by a structure so designed that little or no horizontal or vertical space exists around boxes.

3.3.38.4 ***Block Storage.*** Bales of cotton closely stacked in cubical form and enclosed by aisles or building sides, or both.

3.3.38.5 ***Cartoned Storage.*** Storage consisting of corrugated cardboard or paperboard containers that fully enclose the commodity.

3.3.38.6 ***Laced Storage.*** Storage of tires so that the sides of the tires overlap, creating a woven or laced appearance. *[See Figure A.8.1(g).]*

3.3.38.7 ***Miscellaneous Storage.*** Storage that does not exceed 3.66 m (12 ft) in height and is incidental to another occupancy use group. Such storage shall not constitute more than 10 percent of the building area or 372 m^2 (4000 ft^2) of the sprinklered area, whichever is greater. Such storage shall not exceed 93 m^2 (1000 ft^2) in one pile or area, and each such pile or area shall be separated from other storage areas by at least 7.62 m (25 ft). [**13:**3.3]

3.3.38.8 ***Miscellaneous Tire Storage.*** The storage of rubber tires that is incidental to the main use of the building. Storage areas shall not exceed 186 m^2 (2000 ft^2). On-tread storage piles, regardless of storage method, shall not exceed 7.6 m (25 ft) in the direction of the wheel holes. Acceptable storage arrangements include (1) on-floor, on-side storage up to 3.7 m (12 ft) high; (2) on-floor, on-tread storage up

Copyright National Fire Protection Association
Provided by IHS under license with NFPA
No reproduction or networking permitted without license from IHS
Not for Resale

to 1.5 m (5 ft) high; (3) double-row or multirow fixed or portable rack storage on-side, or on-tread, up to 1.5 m (5 ft) high; (4) single-row fixed or portable rack storage on-side, or on-tread, up to 3.7 m (12 ft) high; and (5) laced tires in racks up to 1.5 m (5 ft) high. [**13:**3.11]

3.3.38.9 ***On-Side Storage.*** Storage of tires in the horizontal or flat position.

3.3.38.10 ***On-Tread Storage.*** Storage of tires in the vertical position or on their treads.

3.3.38.11 ***Palletized Storage.*** Storage of commodities on pallets or other storage aids that form horizontal spaces between tiers of storage.

3.3.38.12 ***Paper Storage.***

3.3.38.12.1 ***Horizontal Paper Storage.*** Storage of paper rolls with the cores in the horizontal plane; also known as on-side storage.

3.3.38.12.2 ***Vertical Paper Storage.*** Storage of rolls with the cores in the vertical plane; also known as on-end storage.

3.3.38.12.3* ***Wrapped Paper Storage.*** Storage of rolls in which the rolls are provided with a complete heavy kraft covering around both sides and ends.

3.3.38.13 ***Pyramid Storage.*** On-floor storage in which commodities are formed into a pyramid to provide pile stability.

3.3.38.14 ***Shelf Storage.*** Storage on structures less than 76.2 cm (30 in.) deep with shelves usually 0.6 m (2 ft) apart vertically and separated by approximately 76.2-cm (30-in.) aisles.

3.3.38.15 ***Tiered Storage.*** A storage arrangement in which cotton bales are stacked two or more bales high directly on the floor or ground, usually on dunnage where stored outdoors.

3.3.38.16 ***Yard Storage.*** Storage of commodities in outdoor areas.

3.3.39 Storage Aid. A commodity storage device such as a shelf, a pallet, dunnage, a separator, or a skid.

3.3.40 Tactics. The method of securing the objectives laid out in the strategy through the use of personnel and equipment to achieve optimum results.

3.3.41 Tire.

3.3.41.1 ***Rubber Tire.*** A pneumatic tire used on passenger automobiles, aircraft, light and heavy trucks, trailers, farm equipment, construction equipment (off-the-road), and buses.

3.3.41.2 ***Scrap Tire.*** A tire that can no longer be used for its original purpose due to wear or damage.

3.3.41.3 ***Shredded Tire.*** A scrap tire reduced in size by a mechanical processing device, commonly referred to as a shredder.

3.3.42 Tire Chip. A classified scrap tire particle that has a basic geometrical shape, which is generally 51 mm (2 in.) or smaller with most of the wire removed.

3.3.43 Wood Panel. Board or sheet made from veneers, particles or fibers of wood and includes plywood, oriented strandboard and similar wood products.

3.3.44 Yard.

3.3.44.1 ***Baled Cotton Yard.*** A storage unit consisting of multiple storage blocks subject to bale and clear space limitations.

3.3.44.2 ***Designated Yard.*** An area marked by boundary lines intended for outside storage purposes only.

3.3.44.3 ***Group of Yards.*** Multiple outdoor storage areas with maximum block and minimum clear space limitations for baled cotton.

3.3.44.4 ***Quarantine Yard.*** A segregated area for the storage of baled cotton of known or suspect fire-packed bales.

Chapter 4 General

4.1 Classification of Commodities.

4.1.1 Commodity classification and the corresponding protection requirements shall be determined based on the makeup of individual storage units (i.e., unit load, pallet load).

4.1.2 When specific test data of commodity classification by a nationally recognized testing agency are available, the data shall be permitted to be used in determining classification of commodities.

4.1.3 Mixed Commodities.

4.1.3.1 Protection requirements shall not be based on the overall commodity mix in a fire area.

4.1.3.2 Unless the requirements of 4.1.3.3 or 4.1.3.4 are met, mixed commodity storage shall be protected by the requirements for the highest classified commodity and storage arrangement.

4.1.3.3 The protection requirements for the lower commodity class shall be permitted to be utilized where all of the following are met:

(1) Up to 10 pallet loads of a higher hazard commodity, as described in 4.1.5 and 4.1.6, shall be permitted to be present in an area not exceeding 3716 m^2 (40,000 ft^2).
(2) The higher hazard commodity shall be randomly dispersed with no adjacent loads in any direction (including diagonally).
(3) Where the ceiling protection is based on Class I or Class II commodities, the allowable number of pallet loads for Class IV or Group A plastics shall be reduced to five.

4.1.3.4 Mixed Commodity Segregation. The protection requirements for the lower commodity class shall be permitted to be utilized in the area of lower commodity class, where the higher hazard material is confined to a designated area and the area is protected to the higher hazard in accordance with the requirements of this standard.

4.1.4 Pallet Types.

4.1.4.1 When loads are palletized, the use of wooden or metal pallets shall be assumed in the classification of commodities.

4.1.4.2 For Class I through Class IV, when unreinforced polypropylene or high-density polyethylene plastic pallets are used, the classification of the commodity unit shall be increased one class (e.g., Class III will become Class IV and Class IV will become cartoned unexpanded Group A plastics).

Copyright National Fire Protection Association
Provided by IHS under license with NFPA
No reproduction or networking permitted without license from IHS
Not for Resale

4.1.4.3 For Class I through Class IV, when reinforced polypropylene or high-density polyethylene plastic pallets are used, the classification of the commodity unit shall be increased two classes (e.g., Class II will become Class IV and Class III will become cartoned unexpanded Group A plastic commodity). Reinforced polypropylene or reinforced high-density polyethylene plastic pallets shall be marked with a molded symbol to indicate that the pallet is reinforced.

4.1.4.4 For Class I through Class IV when other than polypropylene or high-density polyethylene plastic pallets are used, the classification of the commodity unit shall be determined by specific testing conducted by a national testing laboratory or shall be increased two classes.

4.1.4.5 No increase in the commodity classification shall be required for Group A plastic commodities stored on plastic pallets.

4.1.4.6 For ceiling-only sprinkler protection, the requirements of 4.1.4.2 and 4.1.4.3 shall not apply where plastic pallets are used and where the sprinkler system uses spray sprinklers with a K-factor of 16.8.

4.1.4.7 The requirements of 4.1.4.2 through 4.1.4.4 shall not apply to nonwood pallets that have demonstrated a fire hazard that is equal to or less than wood pallets and are listed as such.

4.1.5 Commodity Classes.

4.1.5.1 Class I. A Class I commodity shall be defined as a noncombustible product that meets one of the following criteria:

(1) Placed directly on wooden pallets
(2) Placed in single-layer corrugated cartons, with or without single-thickness cardboard dividers, with or without pallets
(3) Shrink-wrapped or paper-wrapped as a unit load with or without pallets

4.1.5.2 Class II. A Class II commodity shall be defined as a noncombustible product that is in slatted wooden crates, solid wood boxes, multiple-layered corrugated cartons, or equivalent combustible packaging material, with or without pallets.

4.1.5.3 Class III.

4.1.5.3.1 A Class III commodity shall be defined as a product fashioned from wood, paper, natural fibers, or Group C plastics with or without cartons, boxes, or crates and with or without pallets.

4.1.5.3.2 A Class III commodity shall be permitted to contain a limited amount (5 percent by weight or volume or less) of Group A or Group B plastics.

4.1.5.4 Class IV.

4.1.5.4.1 A Class IV commodity shall be defined as a product, with or without pallets, that meets one of the following criteria:

(1) Constructed partially or totally of Group B plastics
(2) Consists of free-flowing Group A plastic materials
(3) Contains within itself or its packaging an appreciable amount (5 percent to 15 percent by weight or 5 percent to 25 percent by volume) of Group A plastics

4.1.5.4.2 The remaining materials shall be permitted to be metal, wood, paper, natural or synthetic fibers, or Group B or Group C plastics.

4.1.6 Classification of Plastics, Elastomers, and Rubber. Plastics, elastomers, and rubber shall be classified as Group A, Group B, or Group C plastics.

4.1.6.1 Group A. The following materials shall be classified as Group A:

(1) ABS (acrylonitrile-butadiene-styrene copolymer)
(2) Acetal (polyformaldehyde)
(3) Acrylic (polymethyl methacrylate)
(4) Butyl rubber
(5) EPDM (ethylene-propylene rubber)
(6) RP (fiberglass-reinforced polyester)
(7) Natural rubber (if expanded)
(8) Nitrile-rubber (acrylonitrile-butadiene-rubber)
(9) PET (thermoplastic polyester)
(10) Polybutadiene
(11) Polycarbonate
(12) Polyester elastomer
(13) Polyethylene
(14) Polypropylene
(15) Polystyrene
(16) Polyurethane
(17) PVC (polyvinyl chloride — highly plasticized, with plasticizer content greater than 20 percent) (rarely found)
(18) SAN (styrene acrylonitrile)
(19) SBR (styrene-butadiene rubber)

4.1.6.2 Group B. The following materials shall be classified as Group B:

(1) Cellulosics (cellulose acetate, cellulose acetate butyrate, ethyl cellulose)
(2) Chloroprene rubber
(3) Fluoroplastics (ECTFE — ethylene-chlorotrifluoro-ethylene copolymer; ETFE — ethylene-tetrafluoroethylene copolymer; FEP — fluorinated ethylene-propylene copolymer)
(4) Natural rubber (not expanded)
(5) Nylon (nylon 6, nylon 6/6)
(6) Silicone rubber

4.1.6.3 Group C. The following materials shall be classified as Group C:

(1) Fluoroplastics (PCTFE — polychlorotrifluoroethylene; PTFE — polytetrafluoroethylene)
(2) Melamine (melamine formaldehyde)
(3) Phenolic
(4) PVC (polyvinyl chloride — flexible — PVCs with plasticizer content up to 20 percent)
(5) PVDC (polyvinylidene chloride)
(6) PVDF (polyvinylidene fluoride)
(7) PVF (polyvinyl fluoride)
(8) Urea (urea formaldehyde)

4.1.7* Classification of Rolled Paper Storage. For the purposes of this standard, the classifications of paper described in 4.1.7.1 through 4.1.7.4 shall apply and shall be used to determine the fire protection design criteria.

4.1.7.1 Heavyweight Class. Heavyweight class shall be defined so as to include paperboard and paper stock having a basis weight [weight per 92.9 m^2 (1000 ft^2)] of 9.1 kg (20 lb).

4.1.7.2 Mediumweight Class. Mediumweight class shall be defined so as to include all the broad range of papers having a basis weight [weight per 92.9 m^2 (1000 ft^2)] of 4.5 kg to 9.1 kg (10 lb to 20 lb).

4.1.7.3 Lightweight Class. Lightweight class shall be defined so as to include all papers having a basis weight [weight per 92.9 m^2 (1000 ft^2)] of 4.5 kg (10 lb).

Copyright National Fire Protection Association
Provided by IHS under license with NFPA
No reproduction or networking permitted without license from IHS
Not for Resale

4.1.7.4 Tissue.

4.1.7.4.1 Tissue shall be defined so as to include the broad range of papers of characteristic gauzy texture, which, in some cases, are fairly transparent.

4.1.7.4.2 For the purposes of this standard, tissue shall be defined as the soft, absorbent type, regardless of basis weight — specifically, crepe wadding and the sanitary class including facial tissue, paper napkins, bathroom tissue, and toweling.

4.2 Usage Changes.

4.2.1 Changes in the commodities, packaging, or storage methods shall require an evaluation of the existing protection features including sprinkler systems where installed.

4.2.2 Protection features shall be in accordance with this standard and NFPA 13, *Standard for the Installation of Sprinkler Systems*, when a change occurs in the commodities being stored, packaging, or storage method.

Chapter 5 General Requirements

5.1 Building Construction.

5.1.1* Construction Type. Buildings used for storage of materials that are stored and protected in accordance with this standard shall be permitted to be of any of the types described in NFPA 220, *Standard on Types of Building Construction*.

5.1.2 Fire-Fighting Access. Access shall be provided to all portions of the premises for fire-fighting purposes.

5.1.3* Emergency Smoke and Heat Venting. *(See Annex C.)*

5.1.3.1 Protection outlined in this standard shall apply to buildings with or without smoke and heat vents.

5.1.3.2 Protection outlined in this standard shall apply to buildings with or without draft curtains.

5.1.3.3 Where local codes require smoke and heat vents in buildings protected by early suppression fast response (ESFR) sprinklers, the vents shall be manually operated or have an operating mechanism with a standard response fusible element rated not less than 182°C (360°F).

5.2 Storage Arrangement.

5.2.1* Piling Procedures and Precautions.

5.2.1.1 Any commodities that are hazardous in combination with each other shall be stored so they cannot come into contact with each other.

5.2.1.2 Safe floor loads shall not be exceeded.

5.2.1.3 Where storing water-absorbent commodities, normal floor loads shall be reduced to take into account the added weight of water that can be absorbed during fire-fighting operations.

5.2.2 Commodity Clearance.

5.2.2.1 The clearance between top of storage and sprinkler deflectors shall conform to NFPA 13, *Standard for the Installation of Sprinkler Systems*.

5.2.2.2* If the commodity is stored above the lower chord of roof trusses, not less than 30.5 cm (1 ft) of clear space shall be maintained to allow wetting of the truss, unless the truss is protected with 1-hour fireproofing.

5.2.2.3 Storage clearance from ducts shall be maintained in accordance with NFPA 91, *Standard for Exhaust Systems for Air Conveying of Vapors, Gases, Mists, and Noncombustible Particulate Solids*.

5.2.2.4 The clearance between stored materials and unit heaters, radiant space heaters, duct furnaces, and flues shall not be less than 0.9 m (3 ft) in all directions or shall be in accordance with the clearances shown on the approval agency label.

5.2.2.5* Clearance shall be maintained to lights or light fixtures to prevent ignition.

5.2.2.6 Clearance shall be maintained around the path of fire door travel to ensure proper operation and inspection.

5.2.2.7 Operation and inspection clearance shall be maintained around fire extinguishing and protection equipment.

5.2.3 Aisles.

5.2.3.1 For the storage of commodities that expand with the absorption of water, such as roll paper, wall aisles not less than 61 cm (24 in.) wide shall be provided.

5.2.3.2 Aisles shall be maintained to retard the transfer of fire from one pile to another and to allow convenient access for fire fighting, salvage, and removal of storage. *(See A.6.1.)*

5.2.4 Flammable and Combustible Liquids.

5.2.4.1 Flammable or combustible liquids shall be kept in flammable liquid storage cabinets, in cutoff rooms, or in detached buildings.

5.2.4.2 Protection shall be in accordance with NFPA 30, *Flammable and Combustible Liquids Code*.

5.3 Fire Protection — General.

5.3.1* Sprinkler Systems.

5.3.1.1 Sprinkler systems installed in buildings used for storage shall be in accordance with NFPA 13, *Standard for the Installation of Sprinkler Systems*.

5.3.1.2 In warehouses containing storage, the chapter applicable to the storage configuration and commodity type shall apply in addition to the requirements of this chapter.

5.3.2 High-Expansion Foam.

5.3.2.1 High-expansion foam systems installed in addition to automatic sprinklers shall be installed in accordance with NFPA 11A, *Standard for Medium- and High-Expansion Foam Systems*, except where modified by this standard.

5.3.2.2 High-expansion foam used to protect idle pallets shall have a fill time of not more than 4 minutes.

5.3.2.3 High-expansion foam systems shall be automatic in operation.

5.3.2.4 Detectors for high-expansion foam systems shall be listed and shall be installed at the ceiling at not more than one-half the listed spacing in accordance with *NFPA 72®*, *National Fire Alarm Code®*.

5.3.2.5 Detection systems, concentrate pumps, generators, and other system components essential to the operation of the system shall have an approved standby power source.

Copyright National Fire Protection Association
Provided by IHS under license with NFPA
No reproduction or networking permitted without license from IHS
Not for Resale

5.3.3 Manual Protection.

5.3.3.1 Portable Fire Extinguishers.

5.3.3.1.1 Portable fire extinguishers shall be provided in accordance with NFPA 10, *Standard for Portable Fire Extinguishers*, unless 5.3.3.1.2 applies.

5.3.3.1.2 Where 38-mm (1½-in.) hose lines are available to reach all portions of areas with Class A fire loads, up to one-half of the portable fire extinguishers required by NFPA 10, *Standard for Portable Fire Extinguishers*, shall be permitted to be omitted.

5.3.3.2 Hydrants. At locations without public hydrants, or where hydrants are not within 75 m (250 ft), private hydrants shall be installed in accordance with NFPA 24, *Standard for the Installation of Private Fire Service Mains and Their Appurtenances.*

5.3.4 Fire Organization.

5.3.4.1 Arrangements shall be made to allow rapid entry into the premises by the municipal fire department, police department, or other authorized personnel in case of fire or other emergency.

5.3.4.2 Due to the unique nature of storage fires and the hazards associated with fighting such fires *(see Annex E and Annex F)*, facility emergency personnel shall be trained to have knowledge of the following:

(1) The pile and building collapse potential during fire fighting and mop-up operations due to sprinkler water absorption, use of hose streams, and the undermining of piles by fire that is likely to cause material or piles to fall (especially roll tissue paper), resulting in injury
(2) The operation of sprinkler systems and water supply equipment
(3) The location of the controlling sprinkler valves so that the correct sprinkler system can be turned on or off as necessary
(4) The correct operation of emergency smoke and heat vent systems where they have been provided
(5) The use of material-handling equipment while sprinklers are operating to effect final extinguishment
(6) The procedure for summoning outside aid immediately in an emergency
(7) The maintenance of the security features of the premises
(8) The operation of foam systems, evacuation procedures, and safety precautions during all foam operations

5.3.4.3 A fire watch shall be maintained when the sprinkler system is not in service.

5.3.5 Alarm Service.

5.3.5.1 Automatic sprinkler systems and foam systems, where provided, shall have approved central station, auxiliary, remote station, or proprietary waterflow alarm service unless otherwise permitted by 5.3.5.1.1 or 5.3.5.1.2.

5.3.5.1.1 Local waterflow alarm service shall be permitted when recorded guard service also is provided.

5.3.5.1.2 Local waterflow alarm service shall be permitted where the storage facilities are occupied on a 24-hour basis.

5.3.5.2 Alarm service shall comply with *NFPA 72®*, *National Fire Alarm Code®*.

5.3.6 Security Service. Security service, where provided, shall comply with NFPA 601, *Standard for Security Services in Fire Loss Prevention.*

5.4 Building Equipment, Maintenance, and Operations.

5.4.1 Mechanical-Handling Equipment — Industrial Trucks.

5.4.1.1 Power-operated industrial trucks shall comply with NFPA 505, *Fire Safety Standard for Powered Industrial Trucks Including Type Designations, Areas of Use, Conversions, Maintenance, and Operation.*

5.4.1.2 Industrial trucks using liquefied petroleum gas (LP-Gas) or liquid fuel shall be refueled outside of the storage building at a location designated for the purpose. *(See Annex C.)*

5.4.2 Building Service Equipment. Electrical equipment shall be installed in accordance with the provisions of NFPA 70, *National Electrical Code®*.

5.4.3 Cutting and Welding Operations.

5.4.3.1 Where welding or cutting operations are necessary, the requirements of NFPA 51B, *Standard for Fire Prevention During Welding, Cutting, and Other Hot Work*, shall apply.

5.4.3.2* Welding, soldering, brazing, and cutting shall be permitted to be performed on building components or contents that cannot be removed, provided that no storage is located below and within 7.6 m (25 ft) of the working area and flameproof tarpaulins enclose the area.

5.4.3.3 During any of the operations identified in 5.4.3.2, all of the following shall apply:

(1) The sprinkler system shall be in service.
(2) Extinguishers suitable for Class A fires with a minimum rating of 2A shall be located in the working area.
(3) Where inside hose lines are available, charged and attended inside hose lines shall be located in the working area.
(4) A fire watch shall be maintained during the operations specified in 5.4.3.2 and for not less than 30 minutes following completion of open-flame operation.

5.4.4 Waste Disposal.

5.4.4.1 Approved containers for rubbish and other trash materials shall be provided.

5.4.4.2 Rubbish, trash, and other waste material shall be disposed of at regular intervals.

5.4.5 Smoking.

5.4.5.1 Smoking shall be prohibited except in locations designated as smoking areas.

5.4.5.2 Signs that read "No Smoking" shall be posted in prohibited areas.

5.4.6* Maintenance and Inspection.

5.4.6.1 Fire walls, fire doors, and floors shall be maintained in functional condition at all times.

5.4.6.2* All water-based fire protection systems and the water supplies shall be inspected, tested, and maintained in accordance with NFPA 25, *Standard for the Inspection, Testing, and Maintenance of Water-Based Fire Protection Systems.*

5.4.7 Refrigeration Systems. Refrigeration systems, if used, shall be in accordance with ASHRAE 15, *Safety Code for Mechanical Refrigeration.*

5.4.8 Lighting. Where it is installed, metal halide lighting shall be selected, installed, and maintained such that catastrophic failure of the bulb shall not ignite materials below.

Copyright National Fire Protection Association
Provided by IHS under license with NFPA
No reproduction or networking permitted without license from IHS
Not for Resale

Chapter 6 Protection of Palletized, Solid Pile, Bin Box, and On-Shelf Storage

6.1* Application. Chapter 6 of this document shall apply to the indoor storage of normal combustibles (Class I through Class IV) and plastics that are stored palletized, solid-piled, in bin boxes, or on shelves.

Chapter 7 Protection of Rack Storage

7.1 Application. Chapter 7 of this document shall apply to the indoor storage of normal combustibles (Class I through Class IV) and plastics that are stored on racks. *(See Annex C.)*

7.2 Building Construction.

7.2.1 Fire protection of roof steel shall not be required when sprinkler systems are installed in accordance with NFPA 13, *Standard for the Installation of Sprinkler Systems.*

7.2.2 Fire protection of steel building columns and vertical rack members that support the building shall not be required when ceiling sprinklers and in-rack sprinklers are installed in accordance with NFPA 13, *Standard for the Installation of Sprinkler Systems.*

7.2.3 For sprinklered buildings with rack storage of over 4.6 m (15 ft) in height and only ceiling sprinklers installed, steel building columns within the rack structure and vertical rack members that support the building shall have a fire resistance rating not less than 1 hour, unless the installation meets the requirements of 12.3.1.7 in NFPA 13, *Standard for the Installation of Sprinkler Systems.*

7.3 Storage Arrangement.

7.3.1* Rack Structure. Rack configurations shall be approved.

7.3.2* Rack Loading. Racks shall not be loaded beyond their design capacity.

7.3.3* Aisle Widths.

7.3.3.1 Aisle widths and depth of racks shall be determined by material-handling methods.

7.3.3.2 The width of aisles shall be considered in the design of the protection system. *(See Chapter 12 of NFPA 13, Standard for the Installation of Sprinkler Systems).*

7.3.3.3 Aisle widths shall be maintained by either fixed rack structures or control in placement of portable racks.

7.3.3.4 Any decrease in aisle width shall require a review of the adequacy of the protection system.

7.3.4 Fire Protection — General.

7.3.4.1 High-Expansion Foam.

7.3.4.1.1* Where high-expansion foam systems are installed, they shall be automatic in operation and shall be in accordance with NFPA 11A, *Standard for Medium- and High-Expansion Foam Systems*, except when modified by this chapter.

7.3.4.1.2 When high-expansion foam systems are used in combination with ceiling sprinklers, in-rack sprinklers shall not be required.

7.3.4.1.3 Detectors shall be listed and shall be installed in one of the following configurations:

(1) At one-half listed linear spacing [e.g., 4.6 m × 4.6 m (15 ft × 15 ft) rather than 9.1 m × 9.1 m (30 ft × 30 ft)] when the following conditions exist:
   (a) Detectors are installed at the ceiling only.
   (b) The clearance from the top of storage does not exceed 3.1 m (10 ft).
   (c) The height of storage does not exceed 7.6 m (25 ft).
(2) At the ceiling at listed spacing and on racks at alternate levels
(3) Where listed for rack storage installation and installed in accordance with ceiling detector listing to provide response within 1 minute after ignition using an ignition source equivalent to that used in a rack storage testing program

7.3.5 High-Expansion Foam Submergence.

7.3.5.1 The following requirements shall apply to storage of Class I, Class II, Class III, and Class IV commodities, as defined in NFPA 13, *Standard for the Installation of Sprinkler Systems*, up to and including 7.6 m (25 ft) in height:

(1)*When high-expansion foam systems are used without sprinklers, the submergence time shall be not more than 5 minutes for Class I, Class II, or Class III commodities.
(2) When high-expansion foam systems are used without sprinklers, the submergence time shall be not more than 4 minutes for Class IV commodities.
(3) When high-expansion foam systems are used in combination with ceiling sprinklers, the submergence time shall be not more than 7 minutes for Class I, Class II, or Class III commodities.
(4) When high-expansion foam systems are used in combination with ceiling sprinklers, the submergence time shall be not more than 5 minutes for Class IV commodities.

7.3.5.2 The following requirements shall apply to storage of Class I, II, III and IV commodities, as defined in NFPA 13, *Standard for the Installation of Sprinkler Systems*, stored over 7.6 m (25 ft) high up to and including 10.67 m (35 ft) in height:

(1) Ceiling sprinklers shall be used in combination with the high-expansion foam system.
(2) The submergence time for the high-expansion foam shall be not more than 5 minutes for Class I, Class II, or Class III commodities.
(3) The submergence time for the high-expansion foam shall be not more than 4 minutes for Class IV commodities.

Chapter 8 Protection of Rubber Tires

8.1* Application. Chapter 8 shall apply to new facilities with indoor storage of usable tires and to existing facilities being converted to the indoor storage of usable tires. Chapter 8 shall not apply to scrap tires storage *(see Annex F).*

8.2 Building Arrangement.

8.2.1 Steel Columns. Steel columns shall be protected as follows unless protected in accordance with 12.3.1.7 of NFPA 13, *Standard for the Installation of Sprinkler Systems*:

(1) For storage exceeding 4.6 m to 6 m (15 ft to 20 ft) in height, columns shall have 1-hour fireproofing.
(2) For storage exceeding 6 m (20 ft) in height, columns shall have 2-hour fireproofing for the entire length of the column, including connections with other structural members.

--`,,,-`-`,,`,,`,`,,`---

Copyright National Fire Protection Association
Provided by IHS under license with NFPA
No reproduction or networking permitted without license from IHS
Not for Resale

8.2.2 Fire Walls.

8.2.2.1 Four-hour fire walls shall be provided between the tire warehouse and tire manufacturing areas.

8.2.2.2 Fire walls shall be designed in accordance with NFPA 221, *Standard for Fire Walls and Fire Barrier Walls.*

8.2.3* Travel Distance to Exits. Travel distance to exits shall be in accordance with NFPA *101®*, *Life Safety Code®*.

8.3 Storage Arrangement.

8.3.1 Piling Procedures.

8.3.1.1* Piles that are not adjacent to or located along a wall shall be not more than 15 m (50 ft) in width.

8.3.1.2 Tires stored adjacent to or along one wall shall not extend more than 7.6 m (25 ft) from the wall.

8.3.1.3 Where tires are stored on-tread, the dimension of the pile in the direction of the wheel hole shall be not more than 15 m (50 ft).

8.3.1.4 The width of the main aisles between piles shall be not less than 2.4 m (8 ft).

8.3.2 Clearances.

8.3.2.1 Storage clearance from roof structures shall be not less than 0.45 m (18 in.) in all directions.

8.3.2.2 A clearance of not less than 0.6 m (24 in.) shall be maintained around the path of fire door travel unless a barricade is provided.

8.3.2.3 Where protection in accordance with this standard is provided, stored tires shall be segregated from other combustible storage by aisles not less than 2.4 m (8 ft) wide.

8.4 Fire Protection.

8.4.1 Fire Emergency Organization. See Annex E.

Chapter 9 Protection of Roll Paper

9.1 Application. Chapter 9 shall apply to new facilities with indoor storage of roll paper, and to existing facilities being converted to the indoor storage of roll paper, except for the following types of roll paper:

(1) Waxed paper
(2) Synthetic paper
(3) Palletized roll paper storage other than that stored on a single floor pallet or raised floor platform

9.2* Building Construction. The protection outlined in this chapter shall apply to buildings with or without fireproofing or other modes of steel protection, unless modified by the requirements of 5.2.2.2.

9.3 Storage Arrangement. The floor load design shall take into account the added weight of water that could be absorbed by the commodity during fire-fighting operations.

Chapter 10 Reserved

Chapter 11 Protection of Storage of Forest Products

11.1 General.

11.1.1* Purpose. The intent of this chapter shall be to provide minimum fire protection requirements to minimize the fire hazard in areas outside used for the storage of forest products.

11.1.2 Scope. The provisions of this chapter shall apply to the following:

(1) Outside storage of lumber and wood panel products at retail and wholesale lumber storage yards
(2) Outside storage of lumber and wood panel products at other than retail and wholesale storage yards
(3) Outside storage of ties, poles, piles, posts, and other similar forest products at pressure-treating plant yards
(4) Outside storage of wood chips and hogged material
(5) Outside storage of logs

11.2 General Fire Protection.

11.2.1 Application. The provisions contained in Section 11.2 shall apply to all facilities in Section 11.3 through Section 11.7.

11.2.2* Operational Fire Prevention.

11.2.2.1* Combustible waste materials such as bark, sawdust, chips, and other debris shall not be permitted to accumulate in a quantity or location that constitutes an undue fire hazard.

11.2.2.2 Smoking shall be prohibited except in specified safe locations approved by the authority having jurisdiction. Signs that read "No Smoking" shall be posted in those areas where smoking is prohibited, and signs indicating areas designated as safe for smoking shall be posted in those locations.

(A) Smoking areas shall be provided with approved, noncombustible ash receptacles.

(B) Smoking shall be specifically prohibited in and around railroad cars.

11.2.2.3 Access into yard areas by unauthorized persons shall be prohibited.

11.2.2.4 Storage areas shall be enclosed with a suitable fence equipped with proper gates located as necessary to allow the entry of fire department apparatus.

11.2.2.5 Miscellaneous occupancy hazards such as vehicle storage and repair shops, cutting and welding operations, flammable liquid storage, liquefied petroleum gas storage, and similar operations shall be safeguarded in accordance with recognized good practice.

11.2.2.6 Reference shall be made to NFPA standards that apply to specific occupancy hazards.

11.2.2.7 Vehicles and other power devices shall be of an approved type and shall be safely maintained and operated.

(A)* Vehicle fueling operations shall be conducted in specified safe locations, isolated from storage areas and principal operating buildings.

(B) Diesel- or gasoline-fueled vehicles that operate on hogged material or chip piles, in log storage areas, or in lumber storage areas shall be equipped with fixed fire-extinguishing systems of a type approved for off-road vehicles.

11.2.2.8 All electrical equipment and installations shall conform to the provisions of NFPA 70, *National Electrical Code®*.

11.2.2.9 Salamanders, braziers, open fires, and similar dangerous heating arrangements shall be prohibited.

11.2.2.10 Heating devices shall be limited to approved-type equipment installed in an approved manner.

Copyright National Fire Protection Association
Provided by IHS under license with NFPA
No reproduction or networking permitted without license from IHS
Not for Resale

11.2.2.11 Suitable safeguards shall be provided to minimize the hazard of sparks caused by equipment such as refuse burners, boiler stacks, vehicle exhausts, and locomotives.

(A)* Burning of shavings, sawdust, and refuse materials shall be conducted only in an approved, enclosed refuse burner equipped with an approved spark arrester and located at a safe distance from the nearest point of any yard.

(B) The design and location of large burners presents special problems, and the authority having jurisdiction shall be consulted.

11.2.2.12 Stacks from solid fuel-burning furnaces and boilers shall be equipped with spark-arresting equipment to prevent hot sparks from reaching the ground, and consideration shall be given to spark hazard in determining the height of such stacks.

11.2.2.13 Cutting, welding, or other use of open flames or spark-producing equipment shall not be permitted in the storage area unless by an approved permit system.

11.2.3 Exposure Protection. Exposure to the yard shall be protected in accordance with the requirements of 11.2.3.1 through 11.2.3.2.

11.2.3.1* Yard areas shall be separated from plant operations and other structures so that fire exposure into the yard is minimized.

(A) Minimum separation shall be by means of a clear space permanently available for fire-fighting operations.

(B) The width of the clear space shall be based on the severity of exposure, which varies with the area, height, occupancy, construction, and protection of the exposing structure and the type of stacking and height of adjacent stacks.

11.2.3.2 Forest, brush, and grass fire exposure shall be minimized by providing adequate clear space that is carefully kept free of combustible vegetation.

(A) Clear space of a width at least equivalent to the driveway shall be provided for grass exposures, and clear space of a width not less than 30 m (100 ft) shall be provided for light brush exposures.

(B) In forested areas, a wider clear space shall be provided.

11.2.4* Fire Detection and Extinguishment. A reliable means for prompt transmission of fire alarms to public fire departments and plant emergency organizations shall be provided.

11.3 Outside Storage of Lumber and Wood Panels — Retail and Wholesale Storage Yards.

11.3.1 Application.

11.3.1.1 The intent of the provisions of Section 11.3 shall be to provide minimum fire protection requirements to minimize the fire hazard in the following areas:

(1) Retail lumberyards handling forest products and other building materials
(2) Wholesale lumber storage yards, including distribution, holding, and transshipment areas

11.3.1.2 In addition to the provisions contained in Section 11.3, the provisions outlined in Section 11.2 shall apply to all retail and wholesale storage yards.

11.3.1.3* The provisions outlined in Section 11.4 shall be used for large outside wholesale and distribution yards.

11.3.2 General.

11.3.2.1* The fire hazard potential inherent in lumber storage operations with large quantities of combustible material shall be controlled by a positive fire prevention program under the direct supervision of upper level management that shall include the following:

(1) Selection, design, and arrangement of storage yard areas and materials-handling equipment based upon proven fire prevention and protection principles
(2) Means for early fire detection, transmission of alarm, and fire extinguishment
(3) Driveways to separate large stacks and provide access for effective fire-fighting operations
(4) Separation of yard storage from yard buildings and other exposing properties
(5) Effective fire prevention maintenance program, including regular yard inspections by trained personnel

11.3.2.2* Water supplies shall be provided in accordance with NFPA 1, *Uniform Fire Code*™.

11.3.3 Open Yard Storage.

11.3.3.1* Lumber stacks shall be on stable ground, and paved or surfaced with materials such as cinders, fine gravel, or stone.

11.3.3.2 The method of stacking shall be stable and in an orderly and regular manner.

11.3.3.3* The height of stacks shall not exceed 6.1 m (20 ft) with due regard for stability.

11.3.3.4 Where stacks are supported clear of the ground, 15.24 cm (6 in.) of clearance shall be provided for cleaning operations under the stacks.

11.3.3.5 Driveways shall be spaced so that a grid system of not more than 15.2 m × 45.7 m (50 ft × 150 ft) is produced.

11.3.3.6 Driveways shall comply with the following:

(1) They shall have a width of not less than 4.6 m (15 ft) and an all-weather surface capable of supporting fire department apparatus.
(2) The radius of turns shall be designed to accommodate fire department apparatus.

11.3.3.7 Stacking limits shall be designated to indicate yard area and alleyway limits in accordance with 11.3.3.7.1 or 11.3.3.7.2.

11.3.3.7.1 The stacking limits shall be designated with boundary posts having signs that indicate stacking limits unless otherwise permitted by 11.3.3.7.2.

11.3.3.7.2 Where yards have paved areas, painted boundary limits shall be permitted to be used to designate stacking limits.

11.3.4 Exposure Protection.

11.3.4.1 Exposure to the Yard.

11.3.4.1.1 Open yard stacking shall be located with not less than 4.6 m (15 ft) clear space to buildings.

11.3.4.1.2 Boundary posts with signs designating stacking limits shall be provided to designate the clear space to unsprinklered buildings in which hazardous manufacturing or other operations take place.

Copyright National Fire Protection Association
Provided by IHS under license with NFPA
No reproduction or networking permitted without license from IHS
Not for Resale

11.3.4.2* Exposure from the Yard.

11.3.4.2.1 Open yard stacking shall be located with not less than 4.6 m (15 ft) clear space to adjacent property lines.

11.3.4.2.2 Alternative forms of exposure protection shall be permitted where approved by the authority having jurisdiction.

11.4 Outside Storage of Lumber and Wood Panels — Wood Processing Facilities.

11.4.1 Application.

11.4.1.1* The intent of the provisions of Section 11.4 shall be to provide minimum fire protection requirements to minimize the fire hazard in large yard storage areas containing lumber, wood panels, and other similar wood products not intended for retail or wholesale distribution at the site.

11.4.1.2 In addition to the provisions contained in Section 11.4, the provisions outlined in Section 11.2 shall apply to all large yard storage areas for lumber and wood panel products at other than retail or wholesale yards.

11.4.2* General. The fire hazard potential inherent in forest product storage operations with large quantities of combustible material shall be controlled by a positive fire prevention program under the direct supervision of upper level management that shall include the following:

(1) Selection, design, and arrangement of storage yard areas and materials-handling equipment based on sound fire prevention and protection principles
(2) Means for early fire detection, transmission of alarm, and fire extinguishment
(3) Driveways to separate large stacks and provide access for effective fire-fighting operations
(4) Separation of yard storage from mill or other plant operations and other exposing properties
(5) Effective fire prevention maintenance program, including regular yard inspections by trained personnel

11.4.3* Open Yard Storage.

11.4.3.1* Water supplies shall be provided in accordance with NFPA 1, *Uniform Fire Code*™.

11.4.3.2 Access to the plant and yard from public highways shall be provided by all-weather roadways capable of supporting fire department apparatus.

11.4.3.3 The storage site shall be reasonably level, solid ground, paved or surfaced with material such as cinders, fine gravel, or stone.

11.4.3.4 Stack height shall be limited to 6.1 m (20 ft).

11.5 Outside Storage of Ties, Poles, and Posts — Pressure-Treating Plants.

11.5.1 Application.

11.5.1.1* The intent of the provisions of Section 11.5 shall be to provide minimum fire protection requirements to minimize the fire hazard in yard storage areas containing treated and untreated ties, poles, piles, posts, and other similar forest products in yards connected with pressure-treating plants, but shall not include the treating buildings, processes, or storage of treating materials.

11.5.1.2 In addition to the provisions contained in Section 11.5, the provisions outlined in Section 11.2 shall apply to all outside storage of ties, poles, piles, posts, and other similar forest products at pressure-treating plant yards.

11.5.2* General. The fire hazard potential inherent in tie storage operations with large quantities of combustible material shall be controlled by a positive fire prevention program under the direct supervision of upper level management that shall include the following:

(1) Selection, design, and arrangement of storage yard areas and materials-handling equipment based upon sound fire prevention and protection principles
(2) Means for early fire detection, transmission of alarm, and fire extinguishment
(3) Driveways to separate large stacks and provide access for effective fire-fighting operations
(4) Separation of yard storage from mill buildings and other exposing properties
(5) Effective fire prevention maintenance program, including regular yard inspections by trained personnel

11.5.3* Tie Yard Protection.

11.5.3.1* Unobstructed alleyways of sufficient width for hand or cart fire hose laying operations shall be provided between piles.

11.5.3.1.1 Alleyways shall not be less than 0.6 m (2 ft) in width.

11.5.3.1.2 Where a minimum alleyway width of 1.2 m (4 ft) is provided, the length of the rows shall be not more than 30 m (100 ft).

11.5.3.1.3 Where an alleyway width less than 1.2 m (4 ft) is provided, the length of the rows shall be not more than 22.5 m (75 ft).

11.5.3.2* Water supplies shall be provided in accordance with NFPA 1, *Uniform Fire Code*™.

11.5.3.3 Access to the plant and yard from public highways shall be provided by all-weather roadways capable of supporting fire department apparatus.

11.5.3.4 The storage site shall be reasonably level, solid ground, paved or surfaced with material such as cinders, fine gravel, or stone.

11.5.3.5* Stack heights shall be limited to 6.1 m (20 ft).

11.6 Outside Storage of Wood Chips and Hogged Material.

11.6.1 Application.

11.6.1.1* The intent of the provisions of Section 11.6 shall be to provide minimum fire protection requirements to minimize the fire hazard in yard storage areas containing wood chips and hogged material.

11.6.1.2 In addition to the provisions contained in Section 11.6, the provisions outlined in Section 11.2 shall apply to all outside storage of wood chips and hogged material, except as modified herein.

11.6.2 General.

11.6.2.1* The fire hazard potential inherent in storage piles shall be controlled by a positive fire prevention program under the direct supervision of upper level management that shall include the following:

(1) Selection, design, and arrangement of storage yard areas and materials-handling equipment based upon sound fire prevention and protection principles

Copyright National Fire Protection Association
Provided by IHS under license with NFPA
No reproduction or networking permitted without license from IHS
Not for Resale

(2) Establishment of control over the various factors that lead to spontaneous heating, including provisions for monitoring the internal condition of the pile
(3) Means for early fire detection and extinguishment
(4) Driveways around the piles and access roads to the top of the piles for effective fire-fighting operations
(5) Facilities for calling the public fire department and facilities needed by the fire department for fire extinguishment
(6) Effective fire prevention maintenance program, including regular yard inspections by trained personnel

11.6.2.2* The following items shall be considered when establishing operating procedures:

(1) The storage site shall be reasonably level, solid ground, or shall be paved with blacktop, concrete, or other hard-surface material.
(2) Operating plans for the buildup and reclaiming of the pile shall be based on a turnover time of not more than 1 year under ideal conditions.
(3)*Piles containing other than screened chips made from cleaned and barked logs.
(4)*The pile size shall be limited.
(5) Pile heights shall be kept low, particularly piles that inherently carry a larger percentage of fines and are subject to greater compaction.
(6) Thermocouples shall be installed during pile buildup, or other means for measuring temperatures within the pile shall be provided with regular (normally weekly) reports to management.
(7)*The pile shall be wetted regularly to help keep fines from drying out and help maintain the moisture content of the surface layer of the pile.

11.6.3* Pile Protection.

11.6.3.1* Piles shall be constructed with an access roadway to the top of the pile in order to reach any part of the pile.

11.6.3.2* Piles shall not exceed 18 m (60 ft) in height, 90 m (300 ft) in width, and 150 m (500 ft) in length.

(A) Where pile height and width are such that all portions of the pile cannot be reached by direct hose streams from the ground, arrangements shall be made to provide fire-fighting service in these areas, and small fire stream supplies shall be available on the top of the pile for handling small surface fires and for wetting the pile in dry weather.

(B) When piles exceed 150 m (500 ft) in length, they shall be subdivided by driveways having not less than 9 m (30 ft) of clear space at the base of the piles.

(C) Low barrier walls around piles shall be provided to clearly define pile perimeters, prevent creeping, and facilitate cleanup of driveways.

11.6.3.3 Where suitable, a small, motorized vehicle amply equipped with portable extinguishing equipment or a water tank and pump shall be provided.

(A) Lightweight ladders that can be placed against the side of the pile shall be placed at convenient locations throughout the yard for use by the plant emergency organization.

(B) Training of the plant emergency organization also shall include procedures and precautions to be observed by yard crews employing power equipment in fighting internal fires.

11.6.3.4* Portable fire extinguishers suitable for Class A fires shall be provided in accordance with NFPA 10, *Standard for Portable Fire Extinguishers*, on all vehicles operating on the pile in addition to the normal Class B units for the vehicle.

11.6.3.5* Water supplies shall be provided in accordance with NFPA 1, *Uniform Fire Code*™.

11.6.3.6 All motor and switch gear enclosures shall be provided with approved, portable fire extinguishers suitable for the hazard involved in accordance with NFPA 10, *Standard for Portable Fire Extinguishers*.

11.6.3.7* Power-operated, shovel-type or scoop-type vehicles, dozers, or similar equipment shall be available for use in moving stored material for fire fighting.

11.6.3.8 Temporary conveyors and motors on the surface or adjacent to the piles shall not be permitted.

11.6.3.9 Physical protection shall be provided to prevent heat sources such as steam lines, air lines, electrical motors, and mechanical drive equipment from becoming buried or heavily coated with combustible material.

11.6.3.10 Tramp metal collectors or detectors shall be required on all conveyor and blower systems.

11.6.4 Exposure Protection.

11.6.4.1* Incinerators or open refuse burning shall not be permitted in any area where sparks could reach the storage piles.

11.6.4.2* A clear space of not less than 4.6 m (15 ft) shall be maintained between piles and exposing structures, yard equipment, or stock, depending on the degree of exposure hazard.

11.6.4.3* Pile-to-pile clearance of not less than 9 m (30 ft) at the base of the pile shall be provided.

11.7 Outside Storage of Logs.

11.7.1 Application.

11.7.1.1* The provisions of Section 11.7 shall be to provide minimum fire protection requirements to minimize the fire hazard in log yard storage areas containing saw, plywood veneer, or pulpwood logs stored in ranked piles commonly referred to as cold decks.

11.7.1.2 Section 11.7 shall not apply to cordwood.

11.7.1.3 In addition to the provisions contained in Section 11.7, the provisions outlined in Section 11.2 shall apply to all outside storage of logs, except as modified herein.

11.7.2* General. The fire hazard potential inherent in log storage operations with large quantities of combustible materials shall be controlled by a positive fire prevention program under the direct supervision of upper level management that shall include the following:

(1) Selection, design, and arrangement of storage yard areas and materials-handling equipment based on sound fire prevention and protection principles
(2) Means for early fire detection, transmission of alarm, and fire extinguishment
(3) Driveways to separate large piles and provide access for effective fire-fighting operations
(4) Separation of yard storage from mill operations and other exposing properties
(5) Effective fire prevention maintenance program, including regular yard inspections by trained personnel

Copyright National Fire Protection Association
Provided by IHS under license with NFPA
No reproduction or networking permitted without license from IHS
Not for Resale

11.7.3* Log Yard Protection.

11.7.3.1 The storage site shall be reasonably level, solid ground, paved or surfaced with material such as cinders, fine gravel, or stone.

11.7.3.2 Access to the plant and yard from public highways shall be provided by all-weather roadways capable of supporting fire department apparatus.

11.7.3.3* All sides of each cold deck shall be accessible by means of driveways.

(A) A driveway width of 1½ times the pile height but not less than 6.1 m (20 ft) shall be provided, with driveways between alternate rows of two pile groups providing a clear space of at least 30 m (100 ft).

(B)* Each cold deck shall not exceed 150 m (500 ft) in length, 90 m (300 ft) in width, and 6.1 m (20 ft) in height.

(C) Driveways for access across each end, with a clear space of not less than 30 m (100 ft) to adjacent pile rows or other exposed property, shall be provided. *(See Figure 11.7.3.3.)*

(D) The size of cold decks shall be permitted to be increased where additional fire flow and fixed fire protection equipment is provided and the approval of the authority having jurisdiction is obtained.

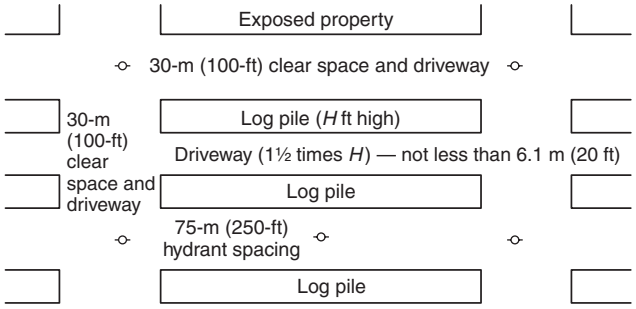

FIGURE 11.7.3.3 Layout of Log Storage Yard.

11.7.3.4* Water supplies shall be provided in accordance with NFPA 1, *Uniform Fire Code™*.

11.7.3.5 Dynamite shall never be used as a means to reclaim frozen log piles.

11.7.3.6* During dry weather, piles shall be wet down.

Chapter 12 Storage of Idle Pallets

12.1* General. Idle pallets shall be stored outside or in a separate building designated for pallet storage, unless permitted by Section 12.2.

12.2 Indoor Storage. Idle pallets shall be permitted to be stored in a building used for other storage or other purpose, if the building is sprinklered in accordance with NFPA 13, *Standard for the Installation of Sprinkler Systems.*

12.3* Outdoor Storage. Idle pallets stored outside shall be stored in accordance with Table 12.3(a) and Table 12.3(b).

Table 12.3(a) Required Clearance Between Outside Pallet Storage and Other Yard Storage

	Minimum Distance	
Pile Size	**m**	**ft**
Under 50 pallets	6.0	20
50–200 pallets	9.1	30
Over 200 pallets	15.2	50

Table 12.3(b) Required Clearance Between Outside Idle Pallet Storage and Building

		Minimum Distance of Wall from Storage					
Wall Construction		**Under 50 Pallets**		**50 to 200 Pallets**		**Over 200 Pallets**	
Wall Type	**Openings**	**m**	**ft**	**m**	**ft**	**m**	**ft**
Masonry	None	0	0	0	0	4.6	15
	Wired glass with outside sprinklers and 1-hour doors	0	0	3.0	10	6.1	20
	Wired or plain glass with outside sprinklers and ¾-hour doors	3.0	10	6.1	20	9.1	30
Wood or metal with outside sprinklers		3.0	10	6.1	20	9.1	30
Wood, metal, or other		6.1	20	9.1	30	15.2	50

Copyright National Fire Protection Association
Provided by IHS under license with NFPA
No reproduction or networking permitted without license from IHS
Not for Resale

Chapter 13 Reserved

Chapter 14 Reserved

Annex A Explanatory Material

Annex A is not a part of the requirements of this NFPA document but is included for informational purposes only. This annex contains explanatory material, numbered to correspond with the applicable text paragraphs.

A.1.1.4(7) The limitations on the type and size of storage are intended to identify those situations where tire storage is present in limited quantity and incidental to the main use of the building. Occupancies such as aircraft hangars, automobile dealers, repair garages, retail storage facilities, automotive and truck assembly plants, and mobile home assembly plants are types of facilities where miscellaneous tire storage could be present. The fire protection sprinkler design densities specified by NFPA 13, *Standard for the Installation of Sprinkler Systems*, are adequate to provide protection for the storage heights indicated. Storage beyond these heights or areas presents hazards that are properly addressed by this standard and are outside the scope of NFPA 13, *Standard for the Installation of Sprinkler Systems*.

A.1.5 For conversions and information, see ASTM SI 10, *Standard for Use of the International System of Units (SI): the Modern Metric System*.

A.1.5.3 Some equivalent values specified in this standard were derived by conversions based on trade sizes or practical measurements, and may not be the equivalent value directly calculated using a conversion factor.

A.3.2.1 Approved. The National Fire Protection Association does not approve, inspect, or certify any installations, procedures, equipment, or materials; nor does it approve or evaluate testing laboratories. In determining the acceptability of installations, procedures, equipment, or materials, the authority having jurisdiction may base acceptance on compliance with NFPA or other appropriate standards. In the absence of such standards, said authority may require evidence of proper installation, procedure, or use. The authority having jurisdiction may also refer to the listings or labeling practices of an organization that is concerned with product evaluations and is thus in a position to determine compliance with appropriate standards for the current production of listed items.

A.3.2.2 Authority Having Jurisdiction (AHJ). The phrase "authority having jurisdiction," or its acronym AHJ, is used in NFPA documents in a broad manner, since jurisdictions and approval agencies vary, as do their responsibilities. Where public safety is primary, the authority having jurisdiction may be a federal, state, local, or other regional department or individual such as a fire chief; fire marshal; chief of a fire prevention bureau, labor department, or health department; building official; electrical inspector; or others having statutory authority. For insurance purposes, an insurance inspection department, rating bureau, or other insurance company representative may be the authority having jurisdiction. In many circumstances, the property owner or his or her designated agent assumes the role of the authority having jurisdiction; at government installations, the commanding officer or departmental official may be the authority having jurisdiction.

A.3.2.4 Listed. The means for identifying listed equipment may vary for each organization concerned with product evaluation; some organizations do not recognize equipment as listed unless it is also labeled. The authority having jurisdiction should utilize the system employed by the listing organization to identify a listed product.

A.3.3.1 Aisle Width. See Figure A.3.3.1.

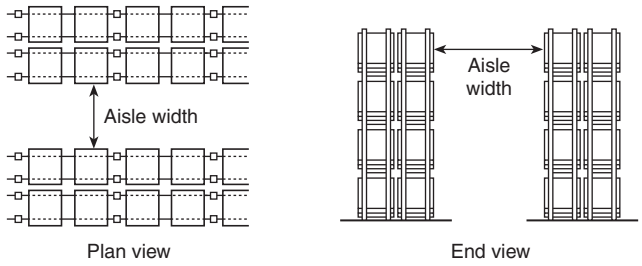

FIGURE A.3.3.1 Illustration of Aisle Width.

A.3.3.3 Available Height for Storage. For new sprinkler installations, maximum height of storage is the height at which commodities can be stored above the floor where the minimum required unobstructed space below sprinklers is maintained. For the evaluation of existing situations, maximum height of storage is the maximum existing height, if space between sprinklers and storage is equal to or greater than required.

A.3.3.4 Baled Cotton. See Table A.3.3.4.

Table A.3.3.4 Typical Cotton Bale Types and Approximate Sizes

	Dimensions		Average Weight		Volume		Density	
Bale Type	mm	in.	kg	lb	m^3	ft^3	kg/m^3	lb/ft^3
Gin, flat	1397 × 1143 × 711	55 × 45 × 28	226.8	500	1.13	40.1	201	12.5
Modified gin, flat	1397 × 1143 × 610	55 × 45 × 24	226.8	500	0.97	34.4	234	14.5
Compressed, standard	1448 × 736 × 584	57 × 29 × 23	226.8	500	0.62	22.0	366	22.7
Gin, standard	1397 × 787 × 533	55 × 31 × 21	226.9	500	0.58	20.7	391	24.2
Compressed, universal	1475 × 635 × 533	58 × 25 × 21	226.8	500	0.50	17.6	454	28.4
Gin, universal	1397 × 660 × 533	55 × 26 × 21	226.8	500	0.49	17.4	463	28.7
Compressed, high density	1473 × 559 × 533	58 × 22 × 21	226.8	500	0.44	15.5	515	32.2

Copyright National Fire Protection Association
Provided by IHS under license with NFPA
No reproduction or networking permitted without license from IHS
Not for Resale

A.3.3.9 Chip. Chips are usually 6.4 mm to 31.8 mm (¼ in. to 1¼ in.) in size, with nothing finer than that which is retainable on a 6.4-mm (¼-in.) screen; however, blower and conveyor systems can create some fine dust particles after screening.

A.3.3.16 Compartmented. Cartons used in most of the Factory Mutual-sponsored plastic tests involved an ordinary 90.7-kg (200-lb) test of outside corrugated cartons with five layers of vertical pieces of corrugated carton used as dividers on the inside. There were also single horizontal pieces of corrugated carton between each layer. Other tests sponsored by the Society of Plastics Industry, Industrial Risk Insurers, Factory Mutual, and Kemper used two vertical pieces of carton (not corrugated) to form an "X" in the carton for separation of product. This arrangement was not considered compartmented, as the pieces of carton used for separations were flexible (not rigid), and only two pieces were in each carton.

A.3.3.17 Container (Shipping, Master, or Outer Container). The term *container* includes items such as cartons and wrappings. Fire-retardant containers or tote boxes do not of themselves create a need for automatic sprinklers unless coated with oil or grease. Containers can lose their fire-retardant properties if washed. For obvious reasons, they should not be exposed to rainfall.

A.3.3.18 Conventional Pallets. See Figure A.3.3.18.

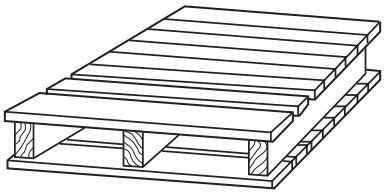

Conventional pallet

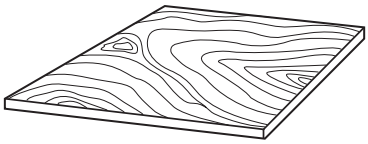

Solid flat bottom wood pallet

FIGURE A.3.3.18 Typical Pallets.

A.3.3.22 Encapsulated. Totally noncombustible commodities on wood pallets that are enclosed only by a plastic sheet are not covered under this definition. Banding (i.e., stretch-wrapping around only the sides of a pallet load) is not considered to be encapsulation. Where there are holes or voids in the plastic or waterproof cover on the top of the carton that exceed more than half the area of the cover, the term *encapsulated* does not apply. The term *encapsulated* does not apply to plastic-enclosed products or packages inside a large, nonplastic, enclosed container.

A.3.3.34 Rack. Some rack structures use solid shelves. Racks are permitted to be fixed, portable, or movable *[see Figure A.7.3.1(a) through Figure A.7.3.1(d), Figure A.7.3.1(e), Figure A.7.3.1(f) through Figure A.7.3.1(i), Figure A.7.3.1(k), and Figure A.7.3.1(l)].* Loading is permitted to be either manual, using lift trucks, stacker cranes, or hand placement, or automatic, using machine-controlled storage and retrieval systems.

A.3.3.34.2 Movable Racks. Movable racks can be moved back and forth only in a horizontal, two-dimensional plane. A moving aisle is created as abutting racks are either loaded or unloaded, then moved across the aisle to abut other racks. [**13:**3.10]

A.3.3.34.4 Portable Racks. Portable racks can be arranged in any number of configurations. [**13:**3.10]

A.3.3.38.12.3 Wrapped Paper Storage. Rolls that are completely protected with a heavyweight kraft wrapper on both sides and ends are subject to a reduced degree of fire hazard. Standard methods for wrapping and capping rolls are outlined in Figure A.3.3.38.12.3.

In some cases, rolls are protected with laminated wrappers, using two sheets of heavy kraft with a high-temperature wax laminate between the sheets. When using this method, the overall weight of wax-laminated wrappers should be based on the basis weight per 92.9 m^2 (1000 ft^2) of the outer sheet only, rather than on the combined basis weight of the outer and inner laminated wrapper sheets. A properly applied wrapper can have the effect of changing the class of a given paper to essentially that of the wrapper material. The effect of applying a wrapper to tissue has not been determined by test.

Wrapper Exterior wrapper Body wrapper	General term for protective wrapping of sides and ends on roll.
Body wrap Sleeve wrap Wrap — do not cap	Wrapper placed around circumference of roll. No heads or caps needed.

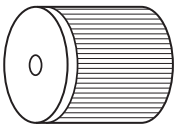

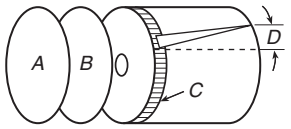

Heads Headers	Protection applied to the ends of the roll (*A* and *B*). Heads do not lap over the end of the roll.
Inside heads	Protection applied to the ends of the roll next to the roll itself (*B*). The wrapper of the roll is crimped down over these heads.
Outside heads	Protection applied to the ends of the roll on the outside (*A*). This head is applied after the wrapper is crimped.
Edge protectors Edge bands	Refers to extra padding to prevent damage to roll edges (*C*).
Overwrap	The distance the body wrap or wrapper overlaps itself (*D*).
Roll cap	A protective cover placed over the end of a roll. Edges of cap lap over the end of the roll and are secured to the sides of the roll.

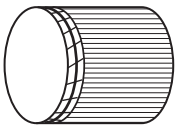

FIGURE A.3.3.38.12.3 Wrapping and Capping Terms and Methods.

Copyright National Fire Protection Association
Provided by IHS under license with NFPA
No reproduction or networking permitted without license from IHS
Not for Resale

A.4.1.7 Paper classifications were derived from a series of large-scale and laboratory-type small-scale fire tests. It is recognized that not all paper in a class burns with exactly the same characteristics.

Paper can be soft or hard, thick or thin, or heavy or light and can also be coated with various materials. The broad range of papers can be classified according to various properties. One important property is basis weight, which is defined as the weight of a sheet of paper of a specified area. Two broad categories of paper are recognized by industry — paper and paperboard. Paperboard normally has a basis weight of 9.1 kg (20 lb) or greater measured on a sheet 92.9 m^2 (1000 ft^2) in area. Stock with a basis weight less than 9.1 kg/92.9 m^2 (20 lb/1000 ft^2) is normally categorized as paper. The basis weight of paper is usually measured on a sheet 278.7 m^2 (3000 ft^2) in area. The basis weight of paper can also be measured on the total area of a ream of paper, which is normally the case for the following types of printing and writing papers:

(1) Bond paper: 500 sheets 432 mm × 559 mm (17 in. × 22 in.) = 120.8 m^2 (1300 ft^2) per ream
(2) Book paper: 500 sheets 635 mm × 965 mm (25 in. × 38 in.) = 306.6 m^2 (3300 ft^2) per ream
(3) Index paper: 500 sheets 648 mm × 775 mm (25.5 in. × 30.5 in.) = 250.8 m^2 (2700 ft^2) per ream
(4) Bristol paper: 500 sheets 572 mm × 889 mm (22.5 in. × 35 in.) = 254 m^2 (2734 ft^2) per ream
(5) Tag paper: 500 sheets 610 mm × 914 mm (24 in. × 36 in.) = 278.7 m^2 (3000 ft^2) per ream

For the purposes of this standard, all basis weights are expressed in kg/92.9 m^2 (lb/1000 ft^2) of paper. To determine the basis weight per 92.9 m^2 (1000 ft^2) for papers measured on a sheet of different area, the following formula should be applied:

$$\frac{\text{Basis weight}}{1000\ \text{ft}^2} = \text{basis weight} \times 1000\ \text{measured area}$$

Example: To determine the basis weight per 92.9 m^2 (1000 ft^2) of 7.3-kg (16-lb) bond paper, the formula would be as follows:

$$\frac{16\ \text{lb}}{1300\ \text{ft}^2} \times 1000 = \frac{12.3\ \text{lb}}{1000\ \text{ft}^2}$$

Large- and small-scale fire tests indicate that the burning rate of paper varies with the basis weight. Heavyweight paper burns more slowly than lightweight paper. Full-scale roll paper fire tests were conducted with the following types of paper:

(1) Linerboard: 19.1 kg/92.9 m^2 (42 lb/1000 ft^2) nominal basis weight
(2) Newsprint: 4.5 kg/92.9 m^2 (10 lb/1000 ft^2) nominal basis weight
(3) Tissue: 2.3 kg/92.9 m^2 (5 lb/1000 ft^2) nominal basis weight

The rate of fire spread over the surface of the tissue rolls was extremely rapid in the full-scale fire tests. The rate of fire spread over the surface of the linerboard rolls was slower. Based on the overall results of these full-scale tests, along with additional data from small-scale testing of various paper grades, the broad range of papers has been classified into three major categories as follows:

(1) Heavyweight: Basis weight of 9.1 kg/ 92.9 m^2 (20 lb/ 1000 ft^2) or greater
(2) Mediumweight: Basis weight of 4.5 kg to 9.1 kg/92.9 m^2 (10 lb to 20 lb/1000 ft^2)
(3) Lightweight: Basis weight of less than 4.5 kg/92.9 m^2 (10 lb/1000 ft^2) and tissues regardless of basis weight

Table A.4.1.7 Paper Classification

Heavyweight	Mediumweight	Lightweight	Tissue
Linerboards	Bond and reproduction	Carbonizing tissue	Toilet tissue
Corrugated medium board	Vellum	Cigarette	Towel tissue
Kraft roll wrappers	Offset	Fruit wrap	
Milk carton board	Tablet	Onion skin	
Folding carton board	Computer		
Bristol board	Envelope		
Tag	Book		
Vellum bristol board	Label		
Index	Magazine		
Cupstock	Butcher		
Pulp board	Bag		
	Newsprint (unwrapped)		

The following SI units were used for conversion of English units:

0.454 kg = 1 lb
25.4 mm = 1 in.
0.3048 m = 1 ft
0.0929 m^2 = 1 ft^2

The various types of papers normally found in each of the four major categories are illustrated in Table A.4.1.7.

A.5.1.1 With protection installed in accordance with this standard, fire protection of overhead steel and steel columns might not be necessary. Consideration should be given to subdividing large-area warehouses in order to reduce the amount of merchandise that could be affected by a single fire.

It is recommended that walls or partitions be provided to separate the storage area from mercantile, manufacturing, or other occupancies to prevent the possibility of transmission of fire or smoke between the two occupancies. Door openings should be equipped with automatic-closing fire doors appropriate for the fire resistance rating of the wall or partition.

A.5.1.3 Since most of the fire tests were conducted without heat and smoke venting and draft curtains, protection specified in NFPA 13, *Standard for the Installation of Sprinkler Systems*, was developed without their use.

For guidance on smoke and heat venting, see NFPA 204, *Standard for Smoke and Heat Venting*.

Smoke removal is important to manual fire fighting and overhaul. Vents through eave-line windows, doors, monitors, or gravity or mechanical exhaust systems facilitate smoke removal after control of the fire is achieved.

Results of tests organized by the Fire Protection Research Foundation and the Retail Committee on Group A plastics to study the interaction of sprinklers, vents, and draft curtains

--`,,,`-`-`,,`,,`,`,,`---

Copyright National Fire Protection Association
Provided by IHS under license with NFPA
No reproduction or networking permitted without license from IHS
Not for Resale

indicate that the impact of automatic vents on sprinkler performance is neutral when automatic sprinkler discharge is adequate for the hazard and that draft curtains are potentially negative. Test results show that the placement of sprinklers and the thermal sensitivity of sprinklers and vents should be considered. Care should be exercised in the placement of draft curtains. Where required to be installed, draft curtains should be aligned where possible with aisles or other clear spaces in storage areas. Draft curtains where positioned over storage could adversely affect sprinkler operations. The number of operating sprinklers increased and led to a fire that consumed more commodity compared to other tests with fires ignited away from the draft curtains.

A.5.2.1 Commodities that are particularly susceptible to water damage should be stored on skids, dunnage, pallets, or elevated platforms in order to maintain at least 10.2 cm (4 in.) clearance from the floor.

A.5.2.2.2 Protection for exposed steel structural roof members could be needed and should be provided as indicated by the authority having jurisdiction.

A.5.2.2.5 Incandescent light fixtures should have shades or guards to prevent the ignition of commodity from hot bulbs where possibility of contact with storage exists.

A.5.3.1 Wet systems are recommended for storage occupancies. Dry systems are permitted only where it is impractical to provide heat. Preaction systems should be considered for storage occupancies that are unheated, particularly where in-rack sprinklers are installed or for those occupancies that are highly susceptible to water damage.

A.5.4.3.2 The use of welding, cutting, soldering, or brazing torches in the storage areas introduces a severe fire hazard and, when possible, should be relocated to a designated area. The use of mechanical fastenings and mechanical saws or cutting wheels is recommended.

A.5.4.6 Periodic inspections of all fire protection equipment should be made in conjunction with regular inspections of the premises. Unsatisfactory conditions should be reported immediately and necessary corrective measures taken promptly.

A.5.4.6.2 All fire-fighting and safety personnel should realize the great danger in shutting off sprinklers once opened by heat from fire. Shutting off sprinklers to locate fire could cause a disaster. Ventilation, use of smoke masks, smoke removal equipment, and removal of material are safer. *(See NFPA 1620, Recommended Practice for Pre-Incident Planning, for additional information.)*

Sprinkler water should be shut off only after the fire is extinguished or completely under the control of hose streams. Even then, rekindling is a possibility. To be ready for prompt valve reopening if fire rekindles, a person stationed at the valve, a fire watch, and dependable communications between them are needed until automatic sprinkler protection is restored.

The following list provides guidelines on pre-fire emergency planning and fire department operations.

(1) *Pre-Fire Emergency Planning.* It is important that such planning be done by management and fire protection personnel, and the action to be taken discussed and correlated with the local fire department personnel.

The critical time during any fire is in the incipient stage, and the action taken by fire protection personnel upon notification of fire can allow the fire to be contained in its early stages.

Pre-emergency planning should incorporate the following:

(a) Availability of hand fire-fighting equipment for the height and type of commodity involved
(b) Availability of fire-fighting equipment and personnel properly trained for the type of storage arrangement involved
(c) Assurance that all automatic fire protection equipment, such as sprinkler systems, water supplies, fire pumps, and hand hose, is in service at all times

(2) *Fire Department Operations.* Sprinkler protection installed as required in this standard is expected to protect the building occupancy without supplemental fire department activity. Fires that occur in rack storage occupancies protected in accordance with this standard are likely to be controlled within the limits outlined in Annex C, since no significant building damage is expected. Fire department activity can, however, minimize the extent of loss. The first fire department pumper arriving at a rack storage-type fire should connect immediately to the sprinkler system's fire department connection and start pumping operations.

In the test series for storage up to 7.6 m (25 ft), the average time from ignition to smoke obscuration in the test building was about 13 minutes. The first sprinkler operating time in these same fires averaged about 3 minutes. Considering response time for the waterflow device to transmit a waterflow signal, approximately 9 minutes remains between the time of receipt of a waterflow alarm signal at fire department headquarters and the time of smoke obscuration within the building as an overall average.

In the test series for storage over 7.6 m (25 ft), the visibility time was extended. If the fire department facility emergency personnel arrive at the building in time to have sufficient visibility to locate the fire, suppression activities with small hose lines should be started. (Self-contained breathing apparatus is recommended.) If, on the other hand, the fire is not readily visible, hose should be laid to exterior doors or exterior openings in the building and charged lines provided to these points, ready for ultimate mop-up operations. Manual fire-fighting operations in such a warehouse should not be considered a substitute for sprinkler protection.

Important: The sprinkler system should be kept in operation during manual fire-fighting and mop-up operations.

During the testing program, the installed automatic extinguishing system was capable of controlling the fire and reducing all temperatures to ambient within 30 minutes of ignition. Ventilation operations and mop-up were not started until this point. The use of smoke removal equipment is important.

Smoke removal capability should be provided. Examples of smoke removal equipment include the following:

(1) Mechanical air-handling systems
(2) Powered exhaust fans
(3) Roof-mounted gravity vents
(4) Perimeter gravity vents

Whichever system is selected, it should be designed for manual actuation by the fire department, thus allowing personnel to coordinate the smoke removal (ventilation) with mop-up operations.

--`,,,-`-`,,`,,`,`,,`---
Copyright National Fire Protection Association
Provided by IHS under license with NFPA
No reproduction or networking permitted without license from IHS
Not for Resale

See also NFPA 600, *Standard on Industrial Fire Brigades*, and Annex E and Annex F in this standard.

A.6.1 Storage should be separated by aisles so that piles are not more than 15.2 m (50 ft) wide or 7.6 m (25 ft) wide if they abut a wall. Main and cross aisles should be located opposite window or door openings in exterior walls. This design is of particular importance in buildings where few exterior openings exist. Aisle width should be not less than 2.4 m (8 ft). In judging the adequacy of existing sprinkler protection, aisle spacing and frequency should be given consideration.

A.7.3.1 Rack storage as referred to in this standard contains commodities in a rack structure, usually steel. Many variations of dimensions are found. Racks can be single-row, double-row, or multiple-row, with or without solid shelves. The standard commodity used in most of the tests was 1.07 m (42 in.) on a side. The types of racks covered in this standard are as follows.

(1) *Double-Row Racks.* Pallets rest on two beams parallel to the aisle. Any number of pallets can be supported by one pair of beams. *[See Figure A.7.3.1(a) through Figure A.7.3.1(d).]*
(2) *Automatic Storage-Type Rack.* The pallet is supported by two rails running perpendicular to the aisle. *[See Figure A.7.3.1(e).]*
(3) *Multiple-Row Racks More than Two Pallets Deep, Measured Aisle to Aisle.* These include drive-in racks, drive-through racks, flow-through racks, and portable racks arranged in the same manner, and conventional or automatic racks with aisles less than 1.07 m (42 in.) wide. *[See Figure A.7.3.1(f) through Figure A.7.3.1(j).]*
(4) *Movable Racks.* These are racks on fixed rails or guides. They can be moved back and forth only in a horizontal two-dimensional plane. A moving aisle is created as abutting racks are either loaded or unloaded, then moved across the aisle to abut other racks. *[See Figure A.7.3.1(k).]*
(5) *Solid Shelving.* These are conventional pallet racks with plywood shelves on the shelf beams *[see Figure A.7.3.1(c) and Figure A.7.3.1(d)]*. These are used in special cases.
(6) *Cantilever Rack.* The load is supported on arms that extend horizontally from columns. The load can rest on the arms or on the shelves supported by the arms. *[See Figure A.7.3.1(l).]*

Load depth in conventional or automatic racks should be considered a nominal 1.22 m (4 ft). *[See Figure A.7.3.1(b).]*

A.7.3.2 Fixed rack structures should be designed to facilitate removal or repair of damaged sections without resorting to flame cutting or welding in the storage area. Where sprinklers are to be installed in racks, rack design should anticipate the additional clearances necessary to facilitate installation of sprinklers. The rack structure should be anchored to prevent damage to sprinkler lines and supply piping in racks.

Rack structures should be designed for seismic conditions in areas where seismic resistance of building structure is required.

A.7.3.3 Storage in aisles can render protection ineffective and should be discouraged.

A.7.3.4.1.1 Detection systems, concentrate pumps, generators, and other system components essential to the operation of the system should have an approved standby power source.

A.7.3.5.1(1) Where high-expansion foam is contemplated as the protection media, consideration should be given to possible damage to the commodity from soaking and corrosion. Consideration also should be given to the problems associated with removal of foam after discharge.

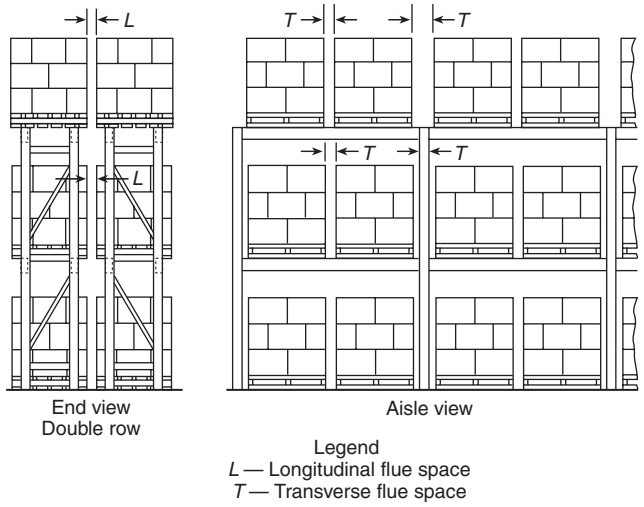

FIGURE A.7.3.1(a) Conventional Pallet Rack.

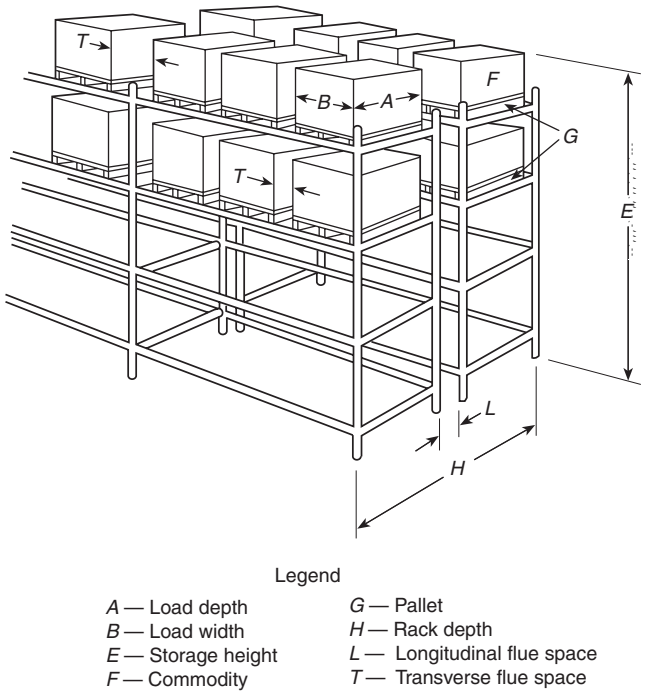

FIGURE A.7.3.1(b) Double-Row Racks without Solid or Slatted Shelves.

Copyright National Fire Protection Association
Provided by IHS under license with NFPA
No reproduction or networking permitted without license from IHS
Not for Resale

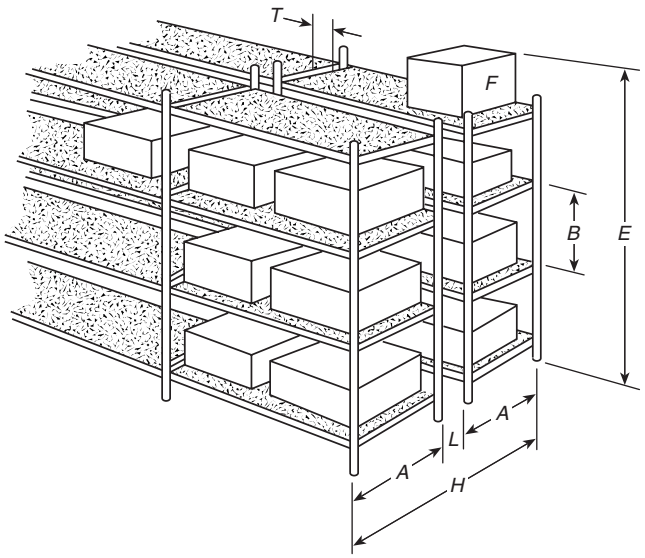

Legend

A — Shelf depth
B — Shelf height
E — Storage height
F — Commodity
H — Rack depth
L — Longitudinal flue space
T — Transverse flue space

FIGURE A.7.3.1(c) Double-Row Racks with Solid Shelves.

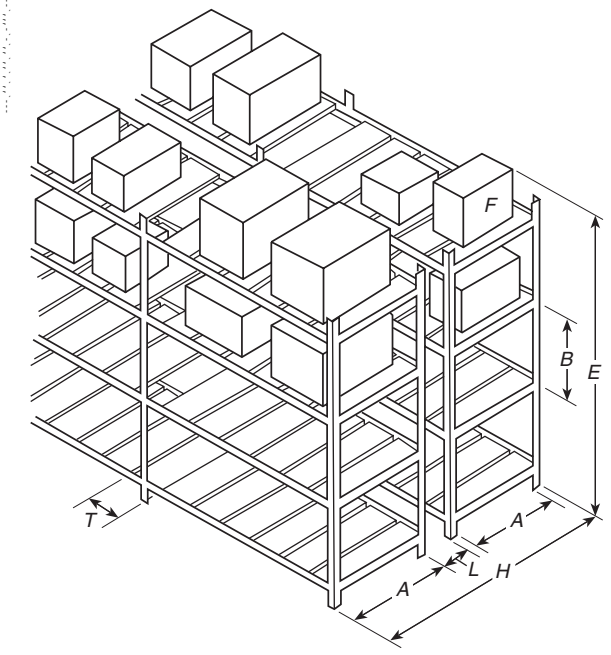

Legend

A — Shelf depth
B — Shelf height
E — Storage height
F — Commodity
H — Rack depth
L — Longitudinal flue space
T — Transverse flue space

FIGURE A.7.3.1(d) Double-Row Racks with Slatted Shelves.

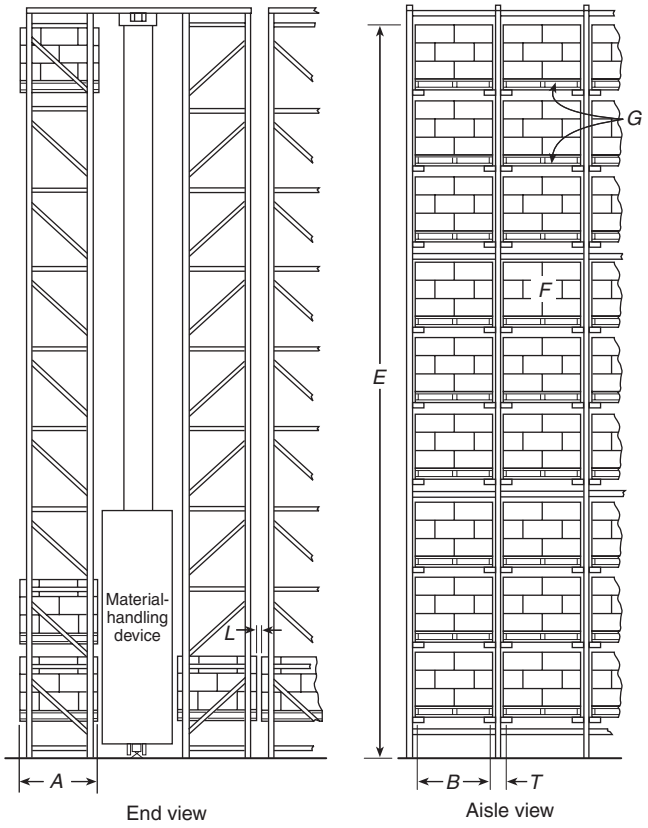

Legend

A — Load depth
B — Load width
E — Storage height
F — Commodity
G — Pallet
L — Longitudinal flue space
T — Transverse flue space

FIGURE A.7.3.1(e) Automatic Storage-Type Rack.

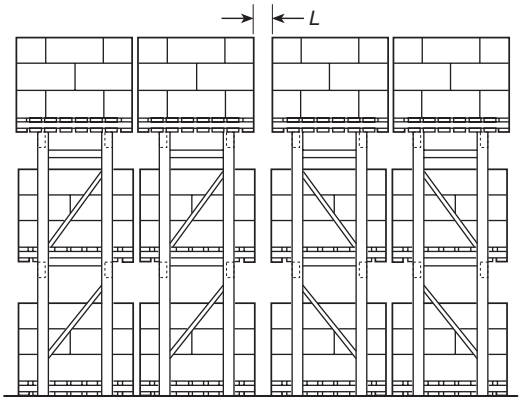

End view

L — Longitudinal flue space

FIGURE A.7.3.1(f) Multiple-Row Rack to be Served by a Reach Truck.

Copyright National Fire Protection Association
Provided by IHS under license with NFPA
No reproduction or networking permitted without license from IHS
Not for Resale

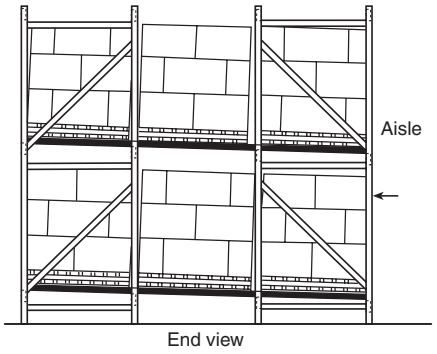

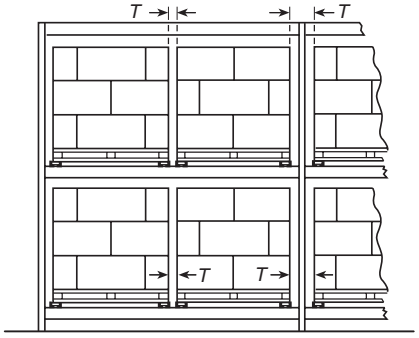

FIGURE A.7.3.1(g) Flow-Through Pallet Rack.

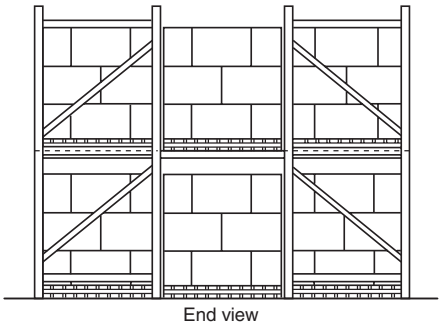

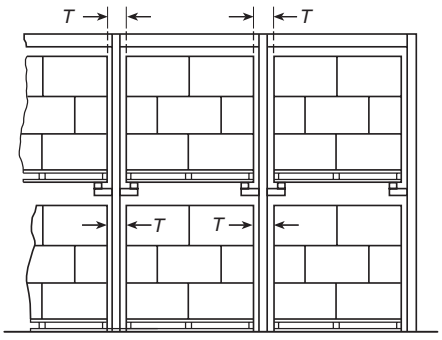

FIGURE A.7.3.1(h) Drive-in Rack — Two or More Pallets Deep (Fork Truck Drives into the Rack to Deposit and Withdraw Loads in the Depth of the Rack).

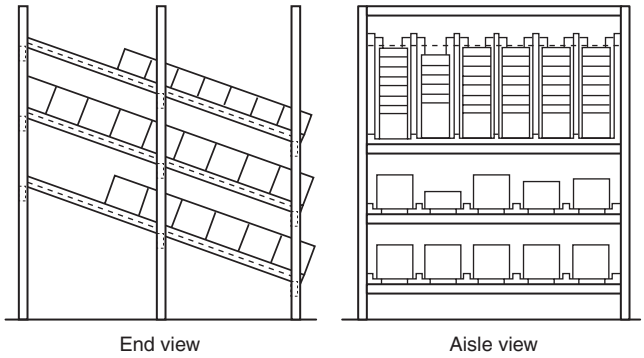

FIGURE A.7.3.1(i) Flow-Through Rack.

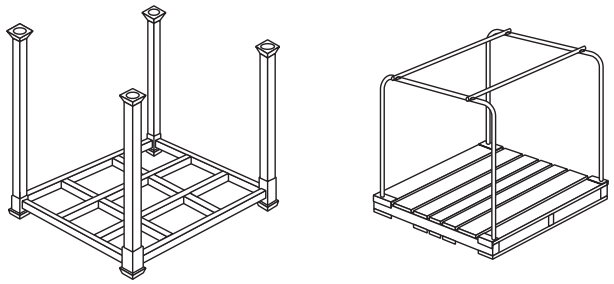

FIGURE A.7.3.1(j) Portable Racks.

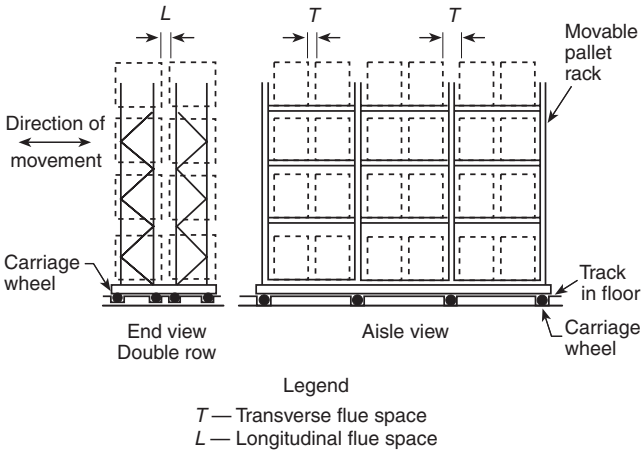

FIGURE A.7.3.1(k) Movable Rack.

Copyright National Fire Protection Association
Provided by IHS under license with NFPA
No reproduction or networking permitted without license from IHS
Not for Resale

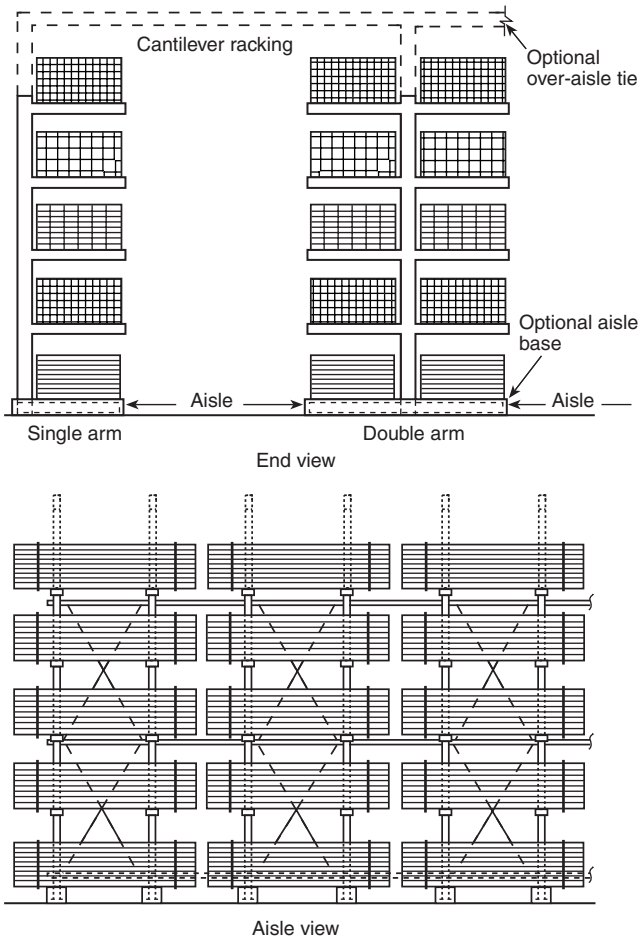

FIGURE A.7.3.1(l) Cantilever Rack.

A.8.1 Illustrations of some, but not necessarily all, tire storage arrangements are shown in Figure A.8.1(a) through Figure A.8.1(g).

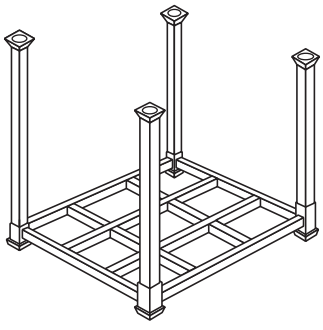

FIGURE A.8.1(a) Typical Open Portable Rack Unit.

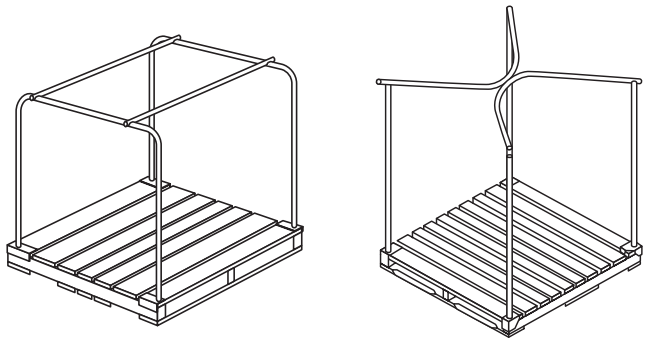

FIGURE A.8.1(b) Typical Palletized Portable Rack Units.

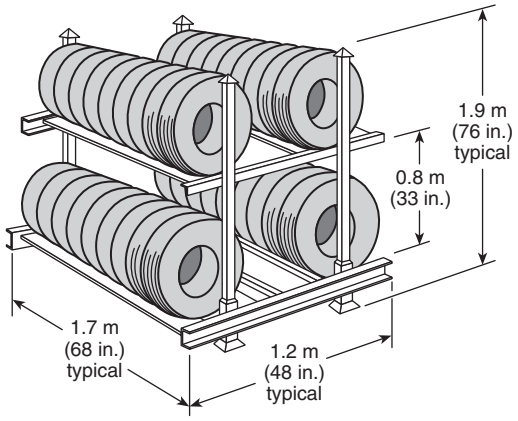

FIGURE A.8.1(c) Open Portable Tire Rack.

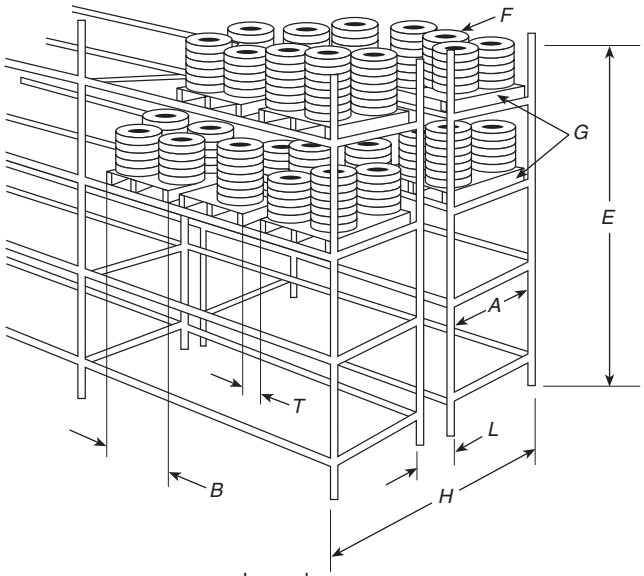

FIGURE A.8.1(d) Double-Row Fixed Rack Tire Storage.

Copyright National Fire Protection Association
Provided by IHS under license with NFPA
No reproduction or networking permitted without license from IHS
Not for Resale

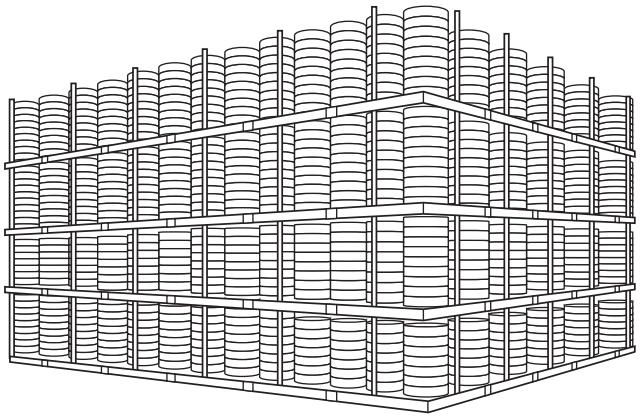

FIGURE A.8.1(e) Palletized Portable Rack On-side Tire Storage Arrangement (Banded or Unbanded).

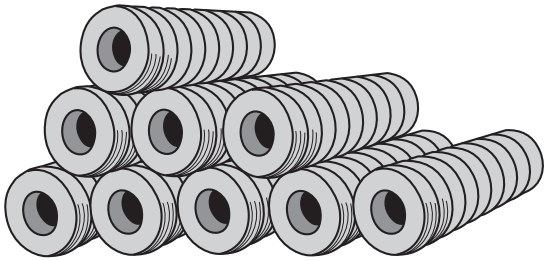

FIGURE A.8.1(f) On-tread, On-floor Tire Storage Arrangement (Normally Banded).

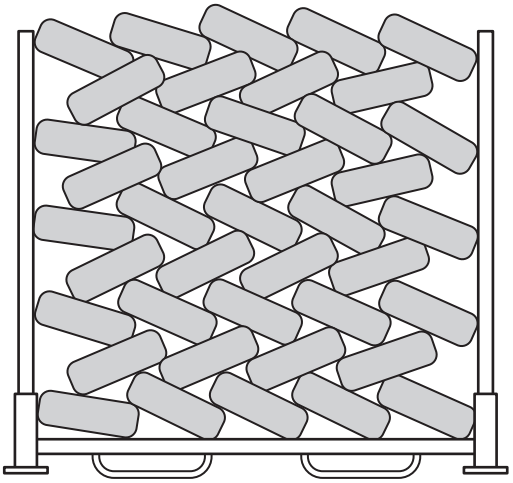

FIGURE A.8.1(g) Typical Laced Tire Storage.

A.8.2.3 NFPA *101®*, *Life Safety Code®*, accurately reflects the travel distance requirements as follows:

(1) Tire storage is classified as ordinary hazard.
(2) Tire fires begin burning slowly. In combination with an acceptable automatic sprinkler system, this slower burning allows time for egress.
(3) Tire storage warehouses have a low occupant load.
(4) Large aisle widths [2.4 m (8 ft) min] required in 8.3.1.4 of this standard facilitate egress.

A.8.3.1.1 It is not the intent to limit the pile length. *(See Figure A.8.3.1.1.)*

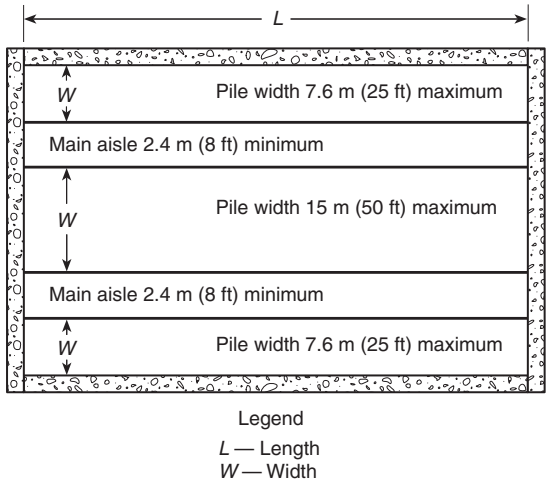

FIGURE A.8.3.1.1 A Typical Tire Piling Arrangement.

A.9.2 With protection installed in accordance with this standard, fire protection of overhead steel and steel columns is not necessary. However, some lightweight beams and joists can distort and necessitate replacement, particularly following fires involving plastic-wrapped rolls stored 6.1 m (20 ft) and higher.

A.11.1.1 Each individual property has its own special conditions of stock-handling, exposure, and topography. For this reason, only basic fire protection principles are discussed herein and are intended to be applied with due consideration of all local factors involved. The authority having jurisdiction should be consulted.

A.11.2.2 Weeds, grass, and similar vegetation should be prevented throughout the entire yard, and any vegetation growth should be sprayed as often as needed with an herbicide or ground sterilizer, or should be grubbed out. Dead weeds should be removed after destruction. Weed burners should not be used.

A.11.2.2.1 Good housekeeping should be maintained at all times, including regular and frequent cleaning of materials-handling equipment.

A.11.2.2.7(A) See NFPA 505, *Fire Safety Standard for Powered Industrial Trucks Including Type Designations, Areas of Use, Conversions, Maintenance, and Operation.*

A.11.2.2.11(A) See NFPA 82, *Standard on Incinerators and Waste and Linen Handling Systems and Equipment*, for small rubbish burners.

A.11.2.3.1 Saw mills, planing mills, treating plants, adzing mills, and similar buildings without blank walls should be separated from yard storage by a clear space in accordance with the recommendations of NFPA 80A, *Recommended Practice for Protection of Buildings from Exterior Fire Exposures.*

Copyright National Fire Protection Association
Provided by IHS under license with NFPA
No reproduction or networking permitted without license from IHS
Not for Resale

Unsprinklered manufacturing buildings and other large structures with combustible contents represent a severe exposure to yard storage, unless the exterior walls have the necessary fire resistance to act as a fire separation and are essentially absent of unprotected openings.

A.11.2.4 Where practical, some form of fixed system of alarm notification or communication equipment should be provided within the storage yard (e.g., telephones, radios).

Portable fire extinguishers suitable for the fire hazard involved should be provided at convenient, conspicuously accessible locations in the yard. Approved portable fire-extinguishing equipment should be located so that the travel distance to the nearest unit is not more than 22.9 m (75 ft). See NFPA 10, *Standard for Portable Fire Extinguishers*. Approved fire extinguishers suitable for the fire hazard involved should be provided on all power vehicles and units, including haulage or private locomotives in the yard.

A.11.3.1.3 The type of operations at properties where the provisions of Section 11.4 apply vary widely. Retail lumber and building material operations are often characterized by large area buildings with minor outside storage areas. On the other hand, wholesale and distribution yards can involve large outside storage areas that present fire protection problems similar to mill yards.

A.11.3.2.1 Fire loss experience in lumberyards indicates that the following are the principal factors that allow lumberyard fires to reach serious proportions:

(1) Large, undivided stacks
(2) Congested storage conditions
(3) Delayed fire detection
(4) Inadequate fire protection
(5) Ineffective fire-fighting tactics

A.11.3.2.2 It is recognized that retail and wholesale lumber storage yards are normally located within municipal system boundaries, where the system should be capable of supplying not less than four 65-mm (2½-in.) hose streams simultaneously [4000 L/min (1000 gpm)]. Where large-scale fire-fighting operations can be expected, larger water supplies are needed. Where protection from municipal water supplies and hydrant systems is not provided or is not considered adequate by the authority having jurisdiction, a yard fire hydrant system should be provided and installed in accordance with NFPA 24, *Standard for the Installation of Private Fire Service Mains and Their Appurtenances*.

A.11.3.3.1 Where the danger of underground fire is present, refuse-filled or sawdust-filled land should not be used.

A.11.3.3.3 Air-dried stickered stacks are subject to rapid fire spread through the air spaces and should therefore be kept as low as practicable.

A.11.3.4.2 Because of the large quantities of material generally involved in lumberyard fires, some form of exposure protection for adjoining properties is recommended. Clear spaces or walls capable of providing fire barriers between yard storage and the exposed properties should be used. The responsibility for the proper protection of properties adjoining a lumberyard is often a joint responsibility to be worked out between the lumberyard and adjoining property owners. The authority having jurisdiction should be consulted.

A.11.4.1.1 Each individual property has its own special conditions of yard use, material-handling methods, and topography. For this reason, only basic fire protection principles are discussed herein, and are intended to be applied with due consideration of all local factors involved. The authority having jurisdiction should be consulted.

A.11.4.2 Fire loss experience in lumber storage yards indicates that the following are the principal factors that allow lumberyard fires to reach serious proportions:

(1) Large undivided stacks
(2) Congested storage conditions
(3) Delayed fire detection
(4) Inadequate fire protection
(5) Ineffective fire-fighting tactics

A.11.4.3 Refuse-filled or sawdust-filled land, swampy ground, or areas where the hazard of underground fire is present should not be used as a storage site.

A.11.4.3.1 For basic fire protection, the hydrant system should be capable of supplying not less than four 65-mm (2½-in.) hose streams simultaneously [4000 L/min (1000 gpm)] while maintaining a positive residual pressure in the fire protection hydrant system of not less than 1.38 bar (20 psi).

Where large-scale fire-fighting operations can be expected, larger water supplies with adequate mains are needed.

For early extinguishment with basic fire protection, hydrants should be spaced with sufficient 65-mm (2½-in.) hose attached to allow rapid hose laying to all parts of the stacking areas. For this reason, the hydrants should be spaced at about 75-m (250-ft) intervals so that any part of the yard can be reached with 60 m (200 ft) of hose. Hydrants preferably should be located at driveway intersections. A hydrant hose house with not less than 60 m (200 ft) of fire hose and auxiliary equipment should be provided at each hydrant. *(See NFPA 24, Standard for the Installation of Private Fire Service Mains and Their Appurtenances.)*

A.11.5.1.1 Each individual property has its own special conditions of yard use, stock-handling methods, and topography. For this reason, only basic fire protection principles are discussed herein, and are intended to be applied with due consideration of all local factors involved. Ties, as used herein, include ties, poles, piles, posts, and other similar forest products. Treated ties are ties that are pressure impregnated with preservatives.

A.11.5.2 Fire loss experience in tie storage yards indicates that the following are the principal factors that allow fires to reach serious proportions:

(1) Large undivided stacks
(2) Congested storage conditions
(3) Delayed fire detection
(4) Inadequate fire protection
(5) Ineffective fire-fighting tactics

A.11.5.3 Refuse-filled or sawdust-filled land, swampy ground, or areas where the hazard of underground fire is present should not be used as storage site.

A.11.5.3.1 With relatively open stacking (that is, stacking that allows for penetration of fire-extinguishing streams), sufficient alleyway width can usually be accomplished by providing a not-less-than 1.2-m (4-ft) alleyway width between alternate rows of tie stacks. *[See Figure A.11.5.3.1(a).]* Flat crib-style stacking without space between the stacks that forms solid packed rows should require a not-less-than 1.2-m (4-ft) alleyway width between each row. *[See Figure A.11.5.3.1(b).]*

Copyright National Fire Protection Association
Provided by IHS under license with NFPA
No reproduction or networking permitted without license from IHS
Not for Resale

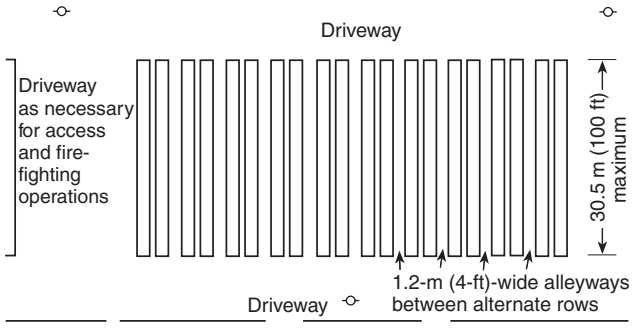

FIGURE A.11.5.3.1(a) Relatively Open Stacking Methods.

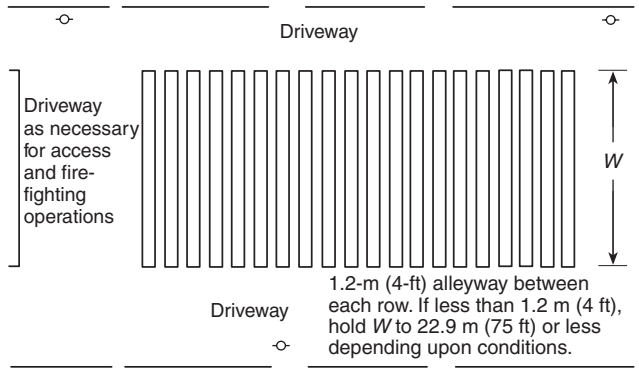

FIGURE A.11.5.3.1(b) Crib Style Stacking into Solid Rows.

A.11.5.3.2 For basic fire protection, the hydrant system should be capable of supplying not less than four 65-mm (2½-in.) hose streams simultaneously [not less than 4000 L/min (1000 gpm)] while maintaining a positive residual pressure in the fire protection hydrant system of not less than 1.38 bar (20 psi).

Where large-scale fire-fighting operations can be expected, larger water supplies with adequate mains are needed.

For early extinguishment with basic fire protection, hydrants should be spaced with sufficient 65-mm (2½-in.) hose attached to allow rapid hose laying to all parts of the stacking areas. For this reason, hydrants should be spaced at about 75-m (250-ft) intervals so that any part of the yard can be reached with 60 m (200 ft) of hose. Hydrants preferably should be located at driveway intersections. A hydrant hose house with not less than 60 m (200 ft) of fire hose and auxiliary equipment should be provided at each hydrant. *(See NFPA 24, Standard for the Installation of Private Fire Service Mains and Their Appurtenances.)*

A.11.5.3.5 Heights in excess of 6.1 m (20 ft) seriously restrict effective extinguishing operations.

A.11.6.1.1 Each individual property has its own special conditions of yard use, stock-handling methods, and topography. It is recognized that climate conditions, wood species, and the age of piles are all factors affecting fire safety. For these reasons, only basic fire protection principles are discussed herein, and are intended to be applied with due consideration of all local factors involved. Except for the surface layer, the moisture content of a pile of wood chips or hogged material is quite high, so surface fires do not generally penetrate more than a few inches into the pile. Fire tests indicate that, for areas of average humidity conditions, the flame propagation over the surface is relatively slow. These conditions allow ready extinguishment, provided that there is early detection and good access. It is expected that, in areas where long periods of low humidity prevail, faster surface flame spread can be anticipated, increasing the importance of early detection and good access.

A.11.6.2.1 Fire experience and fire tests indicate that two completely different types of fires can occur in storage piles — surface fires and internal fires. Fire prevention activities and fire protection facilities should, therefore, include preparations for coping with both situations.

Internal heating is a hazard inherent to long-term bulk storage of chips and hogged material that progresses to spontaneous combustion under certain pile conditions. Internal fires are difficult to detect and extinguish. Unless provisions are made for measuring internal temperatures, such fires can burn for long periods before emission of smoke at the surface indicates an internal fire.

Extinguishment then becomes a lengthy and expensive loss-control and operating problem requiring equipment and manpower to move large portions of the pile, either by digging out the burning portions or removing the unburned portions of the pile. Experience has shown that these conditions create very large losses, and special attention should be given to the prevention of spontaneous combustion and to pre-fire planning where evaluating how best to handle an imminent or actual fire in a particular pile.

A.11.6.2.2 Prevention of internal fires requires an understanding of the factors that cause exothermic oxidation so that steps can be taken to minimize this hazard and to provide means of monitoring temperature conditions inside the pile. Refuse and old chips should not be permitted in the chip pile base. The storage site should be thoroughly cleaned before starting a new pile.

The quality of chip supplies should be controlled in terms of percentage of fines. The concentration of fines should not be allowed during pile buildup.

Pneumatic systems produce an air classification of stored materials that should be recognized, and appropriate steps should be taken to minimize concentration of fines.

It is preferable to spread new stored materials in a relatively even layer over the pile.

Vehicles used on all piles should be of a type that minimizes compaction.

Veneer chip piles should be limited to 15 m (50 ft) in height.

A.11.6.2.2(3) For example, whole-tree chip piles containing bark, leaves, and other extraneous or hogged material can be subject to greater degrees of spontaneous heating and thermal degradation and should be reclaimed more frequently.

A.11.6.2.2(4) Fundamentally, several small piles are better than one large pile.

A.11.6.2.2(7) It is important to minimize the diffusion of water from wet, stored material into dry fires to reduce exothermic heating caused by sorption effects. It is also important to maintain surface moisture content so as to reduce the hazard of surface fires during periods of hot, dry weather.

A.11.6.3 A high standard of housekeeping should be maintained around all potential heat sources.

Copyright National Fire Protection Association
Provided by IHS under license with NFPA
No reproduction or networking permitted without license from IHS
Not for Resale

Care should be exercised to prevent tramp metal from entering the piles, or sections of blower pipes from being buried in the piles.

A.11.6.3.1 For very large piles, two or more access roadways should be provided on opposite sides of the pile.

A.11.6.3.2 Narrow, low piles facilitate fire extinguishment.

A.11.6.3.4 Due to the size and configuration of piles, it is not practical to provide portable fire extinguishers within 22.5 m (75 ft) of travel distance to any point.

A.11.6.3.5 Fire hydrants connected to yard mains should be provided so that any part of the pile(s) can be reached by hose equipment provided in each hydrant hose house. Each hydrant hose house should be equipped with a complement of 65-mm (2½-in.) and 38-mm (1½-in.) hose, a 65-mm (2½-in.) and 38-mm (1½-in.) gated wye, and 38-mm (1½-in.) combination nozzles.

Hydrants should be spaced at about 75-m (250-ft) intervals so that any part of the yard can be reached with 60 m (200 ft) of hose.

Where pile configurations are such that all parts of the pile cannot be reached by the hose, a fire hose cart(s) equipped with an ample supply of hose and nozzles should be strategically placed in the storage area.

The amount of water needed to control a pile fire varies substantially depending on the size of the pile. Weather conditions, operating methods, geographic location, type of material stored, and the degree to which wetting can be employed affect the potential for a large area surface fire. Experience indicates that exposure to long periods of hot, dry weather with no regular surface wetting creates conditions under which fast-spreading surface fires, which require many hose streams for control depending on the size of the pile, can occur.

Likewise, the frequency of pile turnover and operating methods affect the potential for serious internal fires. Piles built using methods that allow a concentration of fines and piles stored for long periods of time with no turnover are subject to internal heating that, if undetected, can create intense internal fires.

A flow of not less than 2000 L/min (500 gpm) should be provided at any fire hydrant in the pile area. Additional flows should be provided as needed where conditions are likely to produce serious surface fires or large internal fires. Fire mains should be engineered to deliver the recommended gallonage plus allowance for operational uses and special extinguishing equipment at a residual pressure of 4.137 bar to 6.895 bar (60 psi to 100 psi) at the hydrants.

A.11.6.3.7 With the use of the equipment specified in 11.6.3.7, surface types of pile fires can usually be removed from the affected areas and extinguished.

Where deep-seated fires occur within the pile or under the pile in tunnels or other enclosures, this equipment is invaluable in breaking down the entire pile and spreading it out in a safe yard area, which allows fire fighters using hand hose lines or deluge units to extinguish both the pile and ground-spread stored material.

A.11.6.4.1 Experience indicates that radiated heat from exposing fires in storage piles does not ordinarily pose a serious ignition threat to other piles, provided that recommended clear spaces are maintained. Flying brands from exposing fires, especially during high winds, do present a hazardous ignition source. Upwind forest or brush fires can also present a problem in relation to flying sparks and brands.

A.11.6.4.2 Buildings or other structures near storage piles can pose a serious exposure hazard to the pile.

A.11.6.4.3 Greater clearance is desirable when piles are high and side slopes are greater than 60 degrees.

A.11.7.1.1 Each individual property has its own special conditions for yard use, stock-handling methods, and topography. For this reason, only basic fire protection principles are discussed herein, and are intended to be applied with due consideration of all local factors involved.

A.11.7.2 Fire loss experience in outside storage of logs indicates that the following are the principal factors that allow log pile fires to reach serious proportions:

(1) Large undivided piles
(2) Congested storage conditions
(3) Delayed fire detection
(4) Inadequate fire protection
(5) Ineffective fire-fighting tactics

A.11.7.3 Refuse-filled or sawdust-filled land, swampy ground, or areas where the hazard of underground fire is present should not be used as a storage site.

A.11.7.3.3 Where practical, greater widths should be provided to minimize the effects of radiated heat, particularly in high-piled yards.

A.11.7.3.3(B) Heights in excess of 6.1 m (20 ft) seriously restrict effective extinguishing operations, since successful extinguishment of log pile fires requires penetration of the pile from the side by hose streams.

A.11.7.3.4 For basic fire protection, the hydrant system should be capable of supplying not less than four 65-mm (2½-in.) hose streams simultaneously [not less than 4000 L/min (1000 gpm)] while maintaining a positive residual pressure in the fire protection hydrant system of not less than 1.38 bar (20 psi).

Where large-scale fire-fighting operations can be expected, larger water supplies with adequate mains are needed.

For early extinguishment with basic fire protection, hydrants should be spaced with sufficient 65-mm (2½-in.) hose attached to allow rapid hose laying to all parts of the piling areas. For this reason, hydrants should be spaced at about 75-m (250-ft) intervals so that any part of the yard can be reached with 60 m (200 ft) of hose. Hydrants should be located at driveway intersections. A hydrant hose house with not less than 60 m (200 ft) of fire hose and auxiliary equipment should be provided at each hydrant. *(See NFPA 24, Standard for the Installation of Private Fire Service Mains and Their Appurtenances).*

A.11.7.3.6 The installation of a portable piping system equipped with irrigation or lawn-type sprinklers on the top of each log pile is recommended.

A.12.1 Idle pallet storage introduces a severe fire condition. Stacking idle pallets in piles is the best arrangement of combustibles to promote rapid spread of fire, heat release, and complete combustion. After pallets are used for a short time in warehouses, they dry out and edges become frayed and splintered. In this condition they are subject to easy ignition from a small ignition source. Again, high piling increases considerably both the challenge to sprinklers and the probability of involving a large number of pallets when fire occurs. Therefore it is preferable to store idle pallets outdoors where possible. A fire in idle plastic or wooden pallets is one of the greatest challenges to sprinklers. The undersides of the pallets create a dry area on which a fire can

--`,,,-`-`,,`,,`,`,,`---

Copyright National Fire Protection Association
Provided by IHS under license with NFPA
No reproduction or networking permitted without license from IHS
Not for Resale

grow and expand to other dry or partially wet areas. This process of jumping to other dry, closely located, parallel, combustible surfaces continues until the fire bursts through the top of the stack. Once this happens, very little water is able to reach the base of the fire. The only practical method of stopping a fire in a large concentration of pallets with ceiling sprinklers is by means of prewetting. In high stacks, prewetting cannot be done without abnormally high water supplies. The storage of idle pallets should not be permitted in an unsprinklered warehouse containing other storage.

A.12.3 It is recognized that some materials are stored on pallets in an open yard. Since stacks of idle pallets present a severe fire problem, special attention needs to be paid to the storage arrangements of the pallets. Manual outside open sprinklers generally are not a reliable means of protection unless property is attended to at all times by plant emergency personnel. Open sprinklers with a deluge valve are preferred.

Annex B Protection of Outdoor Storage

This annex is not a part of the requirements of this NFPA document but is included for informational purposes only.

B.1 General.

B.1.1 The hazards of exposure to outdoor storage from ignition sources and exposing fires and the infinite variety of conditions under which such exposures can occur render impossible the formulation of any single table, formula, or set of rules that can cover all conditions adequately.

B.1.2 Recommendations contained in this annex are for the protection of outdoor storage of commodities covered by the standard. *(See Section 1.1.)*

B.1.3 In general, the provision of automatic fire protection is impractical for outdoor storage. As a result, emphasis needs to be placed upon the following:

(1) Control of potential ignition sources, such as from exposing buildings, transformers, yard equipment, refuse burners, overhead power lines, and vandals
(2) Elimination of adverse factors such as trash accumulations, weeds, and brush
(3) Provision of favorable physical conditions, such as limited pile sizes, low storage heights, wide aisles, and possible use of fire-retardant covers (e.g., tarpaulins)
(4) Rapid and effective application of manual fire-fighting efforts by the provision of fire alarms, strategically located hydrants, and adequate hose houses or hose reels

B.1.4 Outdoor storage should be avoided in most cases but is recognized as a necessity in many industries.

B.1.4.1 Outdoor storage is acceptable for materials that are as follows:

(1) Of low fire hazard, not requiring protection even if located indoors
(2) Of sufficiently low value that a potential loss would not justify the utilization of building space
(3) Of such severe fire hazard that indoor protection is impractical when balanced against potential loss
(4) Of large volume and bulk, making it impractical to construct and protect a building to house the storage

B.1.4.2 Where materials that normally would be stored in buildings are stored outdoors in temporary emergencies, it is recommended that special precautions be taken for their safeguard and that they be moved to a storage warehouse as soon as possible.

B.1.5 Standards that address outdoor storage of specific commodities are found in Chapter 2.

B.2 Responsibility of Management.

B.2.1 It is the responsibility of management to properly consider the hazards of the various materials handled. Protection requirements and storage arrangements vary with the combustibility of the materials. Management should determine any special precautions that should be followed for the types of material stored. The care, cleanliness, and maintenance exercised by management determine to a large extent the relative fire safety in the storage area.

B.2.2 Consideration should be given by management to proper storage of materials in order to prevent the undue concentration of quantities of such materials in a single location, subject to one catastrophe. The criteria used to determine the amount of such material that should be stored in a single location are not only dependent upon the dollar value of the commodity but also upon the total supply and availability of the material. The impact of the loss of the storage upon the ability to continue production should be considered.

B.3 Site.

B.3.1 In selecting a site for outdoor storage, preference should be given to a location that can provide the following:

(1) Adequate municipal fire and police protection
(2) Adequate public water system with hydrants suitably located for protection of the storage
(3) Adequate all-weather roads for fire department apparatus response
(4) Sufficient clear space from buildings or from other combustible storage that constitutes an exposure hazard
(5) Absence of flood hazard
(6) Adequate clearance space between storage piles and any highways, bridges, railroads, and woodlands
(7) Topography as level as possible to provide storage stability
(8) Adequate clearance between the storage of combustible materials and pipelines, pipe bridges, cable trays and electrical transmission lines.

B.3.2 The entire site should be surrounded by a fence or other suitable means to prevent access of unauthorized persons. An adequate number of gates should be provided in the surrounding fence or other barriers to permit ready access of fire apparatus.

B.4 Material Piling.

B.4.1 Materials should be stored in unit piles as low in height and small in area as is consistent with good practice for the materials stored. The maximum height should be determined by the stability of pile, effective reach of hose streams, combustibility of the commodity, and ease of pile breakdown under fire or mop-up conditions. Long narrow piles are preferred over large square piles to facilitate manual fire fighting. (The short dimension increases the effectiveness of hose streams and eases pile breakdown.)

B.4.2 Aisles should be maintained between individual piles, between piles and buildings, and between piles and the boundary line of the storage site. Sufficient driveways having the width of at least 4.57 m (15 ft) should be provided to allow

Copyright National Fire Protection Association
Provided by IHS under license with NFPA
No reproduction or networking permitted without license from IHS
Not for Resale

the travel of fire equipment to all portions of the storage area. Aisles should be at least twice the pile height to reduce the spread of fire from pile to pile and to allow ready access for fire fighting, emergency removal of material, or salvage purposes.

B.4.3 As the commodity class increases in combustibility or where storage could be ignited easily from radiation, wider aisles should be provided. Smaller unit piles could be an alternative to wider aisles if yard space is limited.

B.4.4 For outdoor idle pallet storage, see Chapter 12 of this standard.

B.4.5 Boundary posts with signs designating piling limits should be provided to indicate yard area, roadway, and aisle limits.

B.5 Buildings and Other Structures.

B.5.1 Yard storage, particularly storage of commodities in the higher heat release category, should have as much separation as is practical from important buildings and structures, but not less than that offered by NFPA 80A, *Recommended Practice for Protection of Buildings from Exterior Fire Exposures.*

B.5.1.1 As guidance in using NFPA 80A to establish clear spaces, the following classification of severity with commodity classes of this standard should be used on the basis of 100 percent openings representing yard storage:

(1) Light severity — Commodity Class I
(2) Moderate severity — Commodity Class II
(3) Interpolate between moderate and severe severity for Commodity Class III
(4) Severe severity — Commodity Class IV and Class A plastics

The guidelines of B.5.1.1 apply to the equivalent commodity classes of this standard. The severity of the exposing building or structure also should be a consideration where establishing a clear space.

B.6 Yard Maintenance and Operations.

B.6.1 The entire storage site should be kept free from accumulation of unnecessary combustible materials. Vegetation should be kept cut low. Procedures should be provided for weed control and the periodic cleanup of the yard area.

B.6.2 Adequate lighting should be provided to allow supervision of all parts of the storage area at night.

B.6.3 All electrical equipment and installations should conform to the provisions of NFPA 70, *National Electrical Code®*.

B.6.4 No heating equipment should be located or used within the storage area. Salamanders, braziers, portable heaters, and other open fires should not be used.

B.6.5 Smoking should be prohibited, except in locations prominently designated as smoking areas. "No Smoking" signs should be posted in prohibited areas.

B.6.6 Welding and cutting operations should be prohibited in the storage area, unless in compliance with NFPA 51B, *Standard for Fire Prevention During Welding, Cutting, and Other Hot Work.*

B.6.7 Tarpaulins used for protection of storage against the weather should be of fire-retardant fabric.

B.6.8 Locomotives from which glowing particles could be emitted from exhaust stacks should not be permitted in the yard.

B.6.9 Motorized vehicles using gasoline, diesel fuel, or liquefied petroleum gas as fuel should be garaged in a separate, detached building.

B.6.9.1 Storage and handling of fuel should conform with NFPA 30, *Flammable and Combustible Liquids Code*, and NFPA 58, *Liquefied Petroleum Gas Code.*

B.6.9.2 Repair operations should be conducted outside the yard unless a separate masonry wall building is provided. Vehicles should not be greased, repaired, painted, or otherwise serviced in the yard. Such work should be conducted in conformity with NFPA 30A, *Code for Motor Fuel Dispensing Facilities and Repair Garages.*

B.7 Fire Protection.

B.7.1 Provisions should be made for promptly notifying the public fire department and private fire brigade (if available) in case of fire or other emergency.

B.7.2 Hydrants should be spaced to provide a sufficient number of hose streams. *(See NFPA 24, Standard for the Installation of Private Fire Service Mains and Their Appurtenances.)*

B.7.2.1 Provisions should be made to permit the direction of an adequate number of hose streams on any pile or portion of the storage area that could be involved in fire. It is recommended that, unless adequate protection is provided by the municipal fire department, sufficient hose and other equipment should be kept on hand at the storage property, suitably housed, and provision should be made for trained personnel available to put it into operation.

B.7.2.2 Hydrants and all fire-fighting equipment should be accessible for use at all times. No temporary storage should be allowed to obstruct access to fire-fighting equipment, and any accumulation of snow or obstructing material should be removed promptly.

B.7.3 Monitor nozzles should be provided at strategic points where large quantities of highly combustible materials are stored or where average amounts of combustible materials are stored in inaccessible locations.

B.7.4 Fire extinguishers of an appropriate type should be placed at well-marked strategic points throughout the storage area so that one or more portable fire extinguisher units can quickly be made available for use at any point. Where the climate is such that there is a danger of freezing, suitable extinguishers for freezing temperatures should be used. For guidance in the type and use of extinguishers, refer to NFPA 10, *Standard for Portable Fire Extinguishers.*

B.8 Guard Service.

B.8.1 Guard service should be provided and continuously maintained throughout the yard and storage area at all times while the yard is otherwise unoccupied. The responsibilities and the training of guards should be as specified in NFPA 601, *Standard for Security Services in Fire Loss Prevention.* It is recommended that there be some suitable means of supervising guard activities to ensure that required rounds are made at regular intervals.

B.8.2 The value of strategically placed watchtowers in large yards where a guard stationed at an advantage point can keep the entire property under observation should be considered. It is recommended that such watchtowers be connected to the alarm system for prompt notification of fire.

--`,,,-`-`,,`,,`,`,,`---

Copyright National Fire Protection Association
Provided by IHS under license with NFPA
No reproduction or networking permitted without license from IHS
Not for Resale

Annex C Explanation of Rack Storage Test Data and Procedures

This annex is not a part of the requirements of this NFPA document but is included for informational purposes only.

C.1 General. Annex C provides an explanation of the test data and procedures that led to the development of the protection for rack storage and roll paper storage.

C.2 Some of the rack storage fire tests that were conducted as a part of this program to develop protection criteria were run with eave-line windows or louvers open to simulate smoke and heat venting. These tests opened 87.5 percent and 91 percent more sprinklers than did comparative tests without windows or louvers open. Results from these tests may or may not provide an indication as to how smoke and heat vents installed in the roof of a building would affect the operation of automatic sprinklers.

C.3 Rack Fire Test 85 was conducted to evaluate the results of a liquid spill fire. Test results indicate it is not practical from an economic standpoint to install sprinkler systems with densities capable of controlling such a fire, and, therefore, industrial trucks should be fueled outside of buildings only.

C.4 Chapter 5 from NFPA 13 uses as a basis the large-scale fire test series conducted at the Factory Mutual Research Center, West Glocester, RI.

The test building is approximately 61 m × 76 m (200 ft × 250 ft) [4.65 km^2 (50,000 ft^2) in area], of fire-resistive construction, and contains a volume of approximately 63,761.86 m^3 (2.25 million ft^3), the equivalent of a 9.29-km^2 (100,000-ft^2) building 6.86 m (22.5 ft) high. The test building has two primary heights beneath a single large ceiling. The east section is 9.1 m (30 ft) high, and the west section is 18.29 m (60 ft) high.

The test series for storage height of 6.1 m (20 ft) was conducted in the 9.1-m (30-ft) section with clearances from the top of storage to the ceiling nominally 3.1 m (10 ft). Doors at the lower and intermediate levels and ventilation louvers at the tops of walls were kept closed during the majority of the fire tests, which minimized the effect of exterior conditions. The entire test series was fully instrumented with thermocouples attached to rack members, simulated building columns, bar joists, and the ceiling.

Racks were constructed of steel vertical and horizontal members designed for 1814-kg (4000-lb) loads. Vertical members were 2.44 m (8 ft) on center (O.C.) for conventional racks and 1.22 m (4 ft) O.C. for simulated automated racks. Racks were 1.07 m (3½ ft) wide with 152.4-mm (6-in.) longitudinal flue space for an overall width of 2.29 m (7½ ft). Simulated automated racks and slave pallets were used in the main central rack in the 1.22-m (4-ft) aisle tests. Conventional racks and conventional pallets were used in the main central rack in the 2.44-mm (8-ft) aisle tests. The majority of the tests were conducted with 9.29-m^2 (100-ft^2) sprinkler spacing.

The test configuration for storage heights of 4.6 m (15 ft), 6.1 m (20 ft), and 7.6 m (25 ft) covered a 167.2-m^2 (1800-ft^2) floor area, including aisles between racks. Tests that were used in producing this standard limited fire damage to this area. The maximum water damage area anticipated in the standard is 557.4 m^2 (6000 ft^2) — the upper limit of the design curves.

The test data shows that, as density is increased, both the extent of fire damage and sprinkler operation are reduced. The data also indicates that, with sprinklers installed in the racks, a reduction is gained in the area of fire damage and sprinkler operations (i.e., water damage).

Table C.4 illustrates these points. The information is taken from the test series for storage height of 6.1 m (20 ft) using the standard commodity.

Table C.4 Summary of Fire Test Data

Density (gpm/ft^2)	Fire Damage in Test Array		Sprinkler Operation (165°F) Area (ft^2)
	Percent	ft^2	
0.30 (ceiling only)	22	395	4,500–4,800
0.375 (ceiling only)	17	306	1,800
0.45 (ceiling only)	9	162	700
0.20 (ceiling only)	28–36	504–648	13,100–14,000
0.20 (sprinklers at ceiling and in racks)	8	144	4,100
0.30 (sprinklers at ceiling and in racks)	7	126	700

Note: For SI units, 1 ft = 0.3048 m; °C = ⅝ (°F − 32); 1 gpm/ft^2 = 40.746 $(L/min)/m^2$.

The fact that there is a reduction in both fire damage and area of water application as sprinkler densities are increased or where sprinklers are installed in racks should be considered carefully by those responsible for applying this standard to the rack storage situation.

In the test for storage height of 7.6 m (25 ft), a density of (22.4 L/min)/m^2 [0.55 gpm/ft^2] produced 42 percent, or 70.26 m^2 (756 ft^2), fire damage in the test array and a sprinkler-wetted area of 130.1 m^2 (1400 ft^2). Lesser densities would not be expected to achieve the same limited degree of control. Therefore, if the goal of smaller areas of fire damage is to be achieved, sprinklers in racks should be considered.

The test series for storage height over 7.6 m (25 ft) was conducted in the 18.29-m (60-ft) section of the test building with nominal clearances from the top of storage to the ceiling of either 9.1 m (30 ft) or 3.1 m (10 ft).

Doors at the lower and intermediate levels and ventilation louvers at the top of walls were kept closed during the fire tests. This minimized the effect of exterior wind conditions.

The purpose of the over 7.6-m (25-ft) series was to accomplish the following:

(1) Determine the arrangement of in-rack sprinklers that can be repeated as pile height increases and that provide control of the fire
(2) Determine other protective arrangements, such as high-expansion foam, that provide control of the fire

--`,,,-`-`,,`,,`,`,,`---

Copyright National Fire Protection Association
Provided by IHS under license with NFPA
No reproduction or networking permitted without license from IHS
Not for Resale

Control was considered to have been accomplished if the fire was unlikely to spread from the rack of origin to adjacent racks or spread beyond the length of the 7.6-m (25-ft) test rack. To aid in this judgment, control was considered to have been achieved if the fire did not do the following:

(1) Jump the 1.22-m (4-ft) aisles to adjoining racks
(2) Reach the end face of the end stacks (north or south ends) of the main rack

Control is defined as holding the fire in check through the extinguishing system until the commodities initially involved are consumed or until the fire is extinguished by the extinguishing system or manual aid.

The standard commodity as selected in the 6.1-m (20-ft) test series was used in the majority of over 7.6-m (25-ft) tests. Hallmark products and 3-M products described in the 6.1-m (20-ft) test series report also were used as representative of Class III or IV commodities, or both, in several tests. The results of privately sponsored tests on Hallmark products and plastic-encapsulated standard commodities also were made available to the committee.

A 7.6-m (25-ft) long test array was used for the majority of the over 7.6-m (25-ft) high test series. The decision to use such an array was made because it was believed that a fire in racks over 7.6 m (25 ft) high that extended the full length of a 15.24-m (50-ft) long rack could not be considered controlled, particularly as storage heights increased.

One of the purposes of the tests was to determine arrangements of in-rack sprinklers that can be repeated as pile height increases and that provide control of the fire. The tests for storage height of 9.1 m (30 ft) explored the effect of such arrays. Many of these tests, however, produced appreciable fire spread in storage in tiers above the top level of protection within the racks. (In some cases, a total burnout of the top tiers of both the main rack and the target rack occurred.) In the case of the 9.1-m (30-ft) Hallmark Test 134 on the 18.3-m (60-ft) site, the material in the top tiers of storage burned vigorously, and the fire jumped the aisle above the fourth tier. The fire then burned downward into the south end of the fourth tier. In the test on the floor, a nominal 9.1-m (30-ft) clearance occurred between the top of storage and the ceiling sprinklers, whereas on the platform this clearance was reduced to nominal 3.1 m (10 ft). In most cases, the in-rack sprinklers were effective in controlling fire below the top level of protection within the racks. It has been assumed by the Test Planning Committee that, in an actual case with a clearance of 3.1 m (10 ft) or less above storage, ceiling sprinklers would be expected to control damage above the top level of protection within the racks. Tests have been planned to investigate lesser clearances.

Tests 114 and 128 explore the effect of changing the ignition point from the in-rack standard ignition point to a face ignition location. It should be noted, however, that both of these tests were conducted with 9.1-m (30-ft) clearance from the ceiling sprinklers to the top of storage and, as such, ceiling sprinklers had little effect on the fire in the top two tiers of storage. Fire spread in the three lower tiers is essentially the same. A similar change in the fire spread where the ignition point is changed was noted in Tests 126 and 127. Once again, 9.1-m (30-ft) clearance occurred between the top of storage and the ceiling sprinklers, and, as such, the ceiling sprinklers had little effect on the face fire. Comparisons of Tests 129, 130, and 131 in the test series for storage height of 15.24 m (50 ft) indicate little effect of point of ignition in the particular configuration tested.

Test 125, when compared with Test 133, indicates no significant difference in result between approved low profile sprinklers and standard sprinklers in the racks.

C.4.1 None of the tests that were conducted with densities in accordance with the design curves produced critical temperatures in bar joists 3.81 m (12½ ft) from the ignition source. Therefore, with sprinkler systems designed in accordance with the curves, fireproofing of roof steel should not be necessary.

C.4.2 Temperatures in the test column were maintained below 538°C (1000°F) in all tests where sprinklers in racks were used.

C.4.3 Temperatures in the test column were maintained below 538°C (1000°F) with densities, of roof ceiling sprinklers only, of 15.3 mm/min (0.375 gpm/ft^2) with 2.44-m (8-ft) aisles and 18.34 mm/min (0.45 gpm/ft^2) with 1.22-m (4-ft) aisles using the standard commodity.

C.5 This annex provides a summary of the data developed from the tissue test series of full-scale roll paper tests conducted at the Factory Mutual Research Center, West Glocester, RI.

The test building is approximately 4.65 km^2 [(50,000 ft^2) (200 ft × 250 ft)] in area, of fire-resistive construction, and contains a volume of approximately 63,761.86 m^3 (2.25 million ft^3), the equivalent of a 9.29-km^2 (100,000-ft^2) building 6.86 m (22.5 ft) high. The test building has two primary heights beneath a single large ceiling. The east section is 9.1 m (30 ft) high, and the west section is 18.29 m (60 ft) high.

The tissue test series was conducted in the 30-ft (9.1-m) section with clearances from the top of storage to the ceiling nominally 3.1 m (10 ft).

Figure C.5 illustrates a typical storage array used in the tissue series of tests.

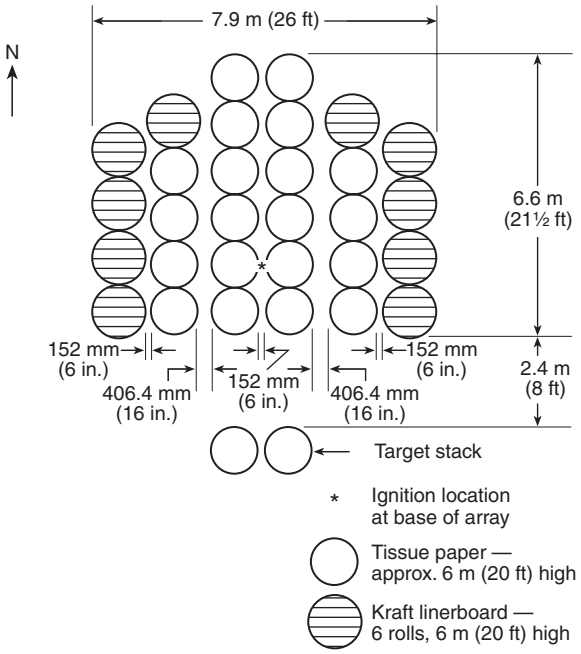

FIGURE C.5 Plan View of Typical Tissue Storage Array.

Copyright National Fire Protection Association
Provided by IHS under license with NFPA
No reproduction or networking permitted without license from IHS
Not for Resale

The basic criteria used in judging test failure included one or more of the following:

(1) Firespread to the north end of the storage array
(2) Gas temperatures near the ceiling maintained at high levels for a time judged to be sufficient to endanger exposed structural steel
(3) Fire reaching the target stacks

Table C.5 outlines the tissue test results.

Fire tests have been conducted on 6.1-m (20-ft) and 7.6-m (25-ft) high vertical storage of tissue with 3.1-m (10-ft) and 1.5-m (5-ft) clear space to ceiling in piles extending up to seven columns in one direction and six columns in the other direction. In these tests, target columns of tissue were located directly across a 2.4-m (8-ft) aisle from the main pile. Three tests were conducted using 13.5-mm (17⁄32-in.) 141°C (286°F) high temperature sprinklers on a 9.3-m^2 (100-ft^2) spacing and at constant pressures of 97 kPa, 414 kPa, and 655 kPa (14 psi, 60 psi, and 95 psi), respectively. One test was run using 16.3-mm (0.64-in.) 141°C (286°F) high temperature sprinklers on a 9.3-m^2 (100-ft^2) spacing at a constant pressure of 345 kPa (50 psi). Two tests were conducted following a scheduled decay from an initial pressure of 952 kPa (138 psi) to a design point of 407 kPa (59 psi) if 40 sprinklers opened.

The significant characteristic of these fire tests was the rapid initial fire spread across the surface of the rolls. Ceiling temperatures were controlled during the decaying pressure tests and during the higher constant pressure tests. With the exception of the 6.1-m (20-ft) high decaying pressure test, the extent of fire spread within the pile could not be clearly established. Aisle jump was experienced, except at the 655-kPa (95-psi) constant pressure, 6.1-m (20-ft) high decaying pressure, and large drop test. Water absorption and pile instability caused pile collapse in all tests. This characteristic should be considered where manually attacking a fire in tissue storage occupancies.

Available fire experience in roll tissue storage occupancies does not correlate well with the constant pressure full-scale fire tests with respect to the number of sprinklers operating and the extent of fire spread. Better correlation is noted with the decaying pressure tests. Thirteen fires reported in storage occupancies with storage piles ranging from 3.1 m to 6.1 m (10 ft to 20 ft) high and protected by wet-pipe sprinkler systems ranging from ordinary hazard design densities to design densities of 24.5 mm/min (0.6 gpm/ft^2) were controlled with an average of 17 sprinkler heads. The maximum number of wet-pipe sprinkler heads that opened was 45 and the minimum number was five, versus 88 and 26, respectively, in the constant pressure tests. Seventeen sprinkler heads opened in

Table C.5 Summary of Roll Paper Tissue Tests

Test Number	B1[a]	B2	B3	B4	B5[b]	B6[b]
Test date	10/4/79	7/23/80	7/30/80	10/15/80	7/28/82	8/5/82
Paper type	Tissue	Tissue	Tissue	Tissue	Tissue	Tissue
Stack height [m (ft-in.)]	6.66 (21-10)	6.1 (20-0)	6.6 (21-8)	5.64 (18-6)	6.05 (19-10)	7.69 (25-3)
Paper, banded	No	No	No	No	No	No
Paper, wrapped	No	No	No	No	No	No
Fuel array	Std.	Std.	Std.	Std.	Std.	Std.
Clearance to ceiling [m (ft-in.)]	2.49 (8-2)	3.05 (10-0)	2.54 (8-4)	3.51 (11-6)	1.58 (5-2)	1.45 (4-9)
Clearance to sprinklers [m (ft-in.)]	2.31 (7-7)	2.87 (9-5)	2.36 (7-9)	3.28 (10-9)	1.40 (4-7)	1.27 (4-2)
Sprinkler orifice [mm (ft-in.)]	13.5 (17⁄32)	13.5 (17⁄32)	13.5 (17⁄32)	16.33 (0.64)	13.5 (17⁄32)	13.5 (17⁄32)
Sprinkler temp. rating [°C (°F)]	138 (280)	138 (280)	138 (280)	138 (280)	138 (280)	138 (280)
Sprinkler spacing [m × m (ft × ft)]	3.05 × 3.05 (10 × 10)	3.05 × 3.05 (10 × 10)	3.05 × 3.05 (10 × 10)	3.05 × 3.05 (10 × 10)	3.05 × 3.05 (10 × 10)	3.05 × 3.05 (10 × 10)
Water pressure [kPa (psi)]	0.67 (14)[c]	2.87 (60)	4.55 (95)	2.39 (50)	6.61 (138) initial 4.88 (102) final	6.61 (138) initial 4.21 (88) final
Moisture content of paper (%)	9.3	9.3	10.2	6.0	8.2	9.2
First sprinkler operation (min:sec)	0:43	0:32	0:38	0:31	0:28	0:22
Total sprinklers open	88	33	26	64	17	29
Final flow [L/min (gpm)]	9746 (2575)[c]	7540 (1992)	7544 (1993)	18,573 (4907)	5159 (1363)	8161 (2156)
Sprinkler demand area [m^2 (ft^2)]	817.5 (8800)	306.6 (3300)	241.5 (2600)	595 (6400)	158 (1700)	269 (2900)
Avg. discharge density [L/min·m^2 (gpm/ft^2)]	11.8 (0.29)[c]	24.4 (0.60)	31.4 (0.77)	—	37.5 (0.92) initial 32.6 (0.80) final	39.1 (0.96) initial 30.2 (0.74) final
Max. 1 minute avg. gas temp. over ignition [°C (°F)]	916 (1680)[c]	795 (1463)	890 (1634)	826 (1519)	[d]	[e]
Duration of high temp. within acceptable limits	No	Yes	Yes	Marginal	Yes	Yes
Max. 1 minute avg. fire plume gas velocity over ignition [m/sec (ft/sec)]	—	12.4 (40.7)	15.3 (50.2)	14.6 (47.8)	—	—
Target ignited	Yes	Yes	No	No	No	Briefly
Extent of fire damage within acceptable limits	No	No	Marginal	Marginal	Yes	Marginal
Test duration (minutes)	17.4	20	20	25.5	45	45

[a] Phase I Test.
[b] Phase III tests decaying pressure.
[c] Pressure increased to 345 kPa (50 psi) at 10 minutes.
[d] Maximum steel temperature over ignition 172°C (341°F).
[e] Maximum steel temperature over ignition 56°C (132°F).

Copyright National Fire Protection Association
Provided by IHS under license with NFPA
No reproduction or networking permitted without license from IHS
Not for Resale

the 6.1-m (20-ft) high decaying pressure test. One actual fire in tissue storage provided with a dry-pipe system opened 143 sprinklers but was reported as controlled.

One fire test was conducted with plastic-wrapped rolls of heavyweight kraft paper. The on-end storage was in a standard configuration, 6.1 m (20 ft) high with 2.9-m (9½-ft) clearance to ceiling sprinklers. The prescribed 12.2-mm/min (0.30-gpm/ft^2) density controlled the fire spread, but protection to roof steel was marginal to the point where light beams and joists could be expected to distort. A lower moisture content in the paper as a result of the protective plastic wrapping was considered to be the reason for the higher temperatures in this test as compared to a similar test where the rolls were not wrapped.

Annex D Protection of Baled Cotton History of Guidelines

This annex is not a part of the requirements of this NFPA document but is included for informational purposes only.

D.1 Introduction.

D.1.1 Origin. In the early 1900s, a group of marine underwriters formulated regulations to reduce the frequency of excessive fire loss in baled cotton facilities. In 1916, following a joint conference with the cotton industry, guidelines were established under the title *Specifications and Standards* (also known as *Marine Standards*).

From 1947 through 1969, the sponsorship was through the Cotton Warehouse and Inspection Service (dissolved in 1969). In 1967, interested insurance rating bureaus were added as sponsors, and, in 1969, to prevent conflicts with various rating bureau schedules, the word *Standards* was replaced with *Recommended Good Practices*. However, since 1939, the booklet was commonly referred to as the *Blue Book*.

Numerous revisions were made over the years to keep current, the last made in 1973. Early in 1978, the committee for the *Blue Book* requested that the NFPA consider a standard on baled cotton storage and handling based on the *Blue Book* recommended practices. The NFPA Correlating Committee for Storage expanded the scope to include all fibers in baled form, which were covered in NFPA 44, *Storage of Combustible Fibers*, which was withdrawn many years ago. Little data was found on fire experience for baled fibers other than cotton, and that data was largely empirical in nature.

Therefrom, the former NFPA 231E, *Recommended Practice for the Storage of Baled Cotton*, was developed by consensus of a test group formed in 1978 that was made up of the cotton warehousing, cotton processing, and insurance industries, under the auspices of the Technical Committee on General Storage. The recommendations were limited to cotton fiber in baled form with the intent to convert to a standard as field experience became available to further substantiate its content.

With the merger of a number of general storage standards in 1999, the information was edited and is now included in this annex as guidance for the user.

D.1.2 Scope.

D.1.2.1 This annex provides fire protection guidance for the storage of baled cotton in buildings and in yards.

D.1.2.2 None of the provisions outlined should be considered mandatory. However, it is recommended that property owners follow these guidelines as a minimum means of limiting fire spread by the application of the storage methods specified, by the separation of major storages using fire walls or clear spaces, and by the provision of an adequate means of extinguishment.

D.1.2.3 These guidelines can be applied to new or existing facilities.

D.1.2.4 There is no intent to restrict new technologies or alternative arrangements that offer protection features superior to those outlined.

D.1.3 General.

D.1.3.1 Cotton fiber is readily ignitible and burns freely and, when stored in relatively large quantities, poses special fire control problems not generally encountered in other common commodities.

Cotton fiber is compressed to various densities into baled form for transport, storage, and handling and is largely covered by industry-accepted packaging materials and bound by steel, synthetic or wire bands, or wire. The bale surfaces normally are ragged in appearance due to the loose fibrous material not confined by the binding or wrapping. Frequently, this ragged appearance is further aggravated by sampling, which exposes additional fibrous material and can contribute to the rapid spread of fire.

Bale storage in relatively large quantities can pose severe fire control problems due to the potential for flameover and the large area of involvement that could overcome even a well designed and supplied sprinkler system. Therefore, this annex takes into consideration limits on the number of bales per building or fire division and the size of storage blocks.

Where the bales are tiered or piled in buildings or outdoors, the loose surface fibers are easily ignited in the presence of an ignition source and the fire can spread rapidly over the entire mass or body of the material. This happening commonly is called *flameover*. Fire then can burrow into the bale interiors making detection and extinguishment difficult, particularly in large mass storage. A quick, hot fire then can ensue and spread beyond the control of ordinary extinguishing methods.

In properly arranged storage and with adequate automatic sprinkler protection, fire normally is confined to the pile of origin, although an aisle fire can be expected to involve more than one tier or pile. Sprinklers usually operate beyond the confines of the fire and wet down bales immediately adjacent to the burning pile.

If adequate sprinkler protection is lacking, if tiers or piles are too large or high, if aisle separation is not properly maintained, or if the bales are otherwise improperly arranged, damage to the section, building, or area of involvement will be more severe, if not totally destructive.

D.1.3.2 Common causes of fire in baled cotton include, but are not limited to, the following:

(1) Fire-packed bales from the ginning or other process
(2) Steel bands breaking and striking or rubbing (friction) against each other or other metallic objects, causing sparks
(3) Extraneous sparks from sources such as vehicle exhausts and incinerators
(4) Miscellaneous sources such as cutting and welding, electrical and mechanical faults, and smoking

D.2 Building Construction.

D.2.1 Construction. Buildings used for the storage of baled cotton that is stored and protected in accordance with these guidelines are permitted to be of any of the types described in NFPA 220, *Standard on Types of Building Construction.*

--`,,`-`-`,,`,,`,`,,`---

Copyright National Fire Protection Association
Provided by IHS under license with NFPA
No reproduction or networking permitted without license from IHS
Not for Resale

D.2.2 Emergency Smoke and Heat Venting. The protection outlined in these guidelines applies to buildings with or without roof vents and draft curtains.

D.2.3 Fire Divisions or Clear Spaces Between Buildings.

D.2.3.1 A fire division is a building, compartment, or section cut off by fire walls or separation.

D.2.3.1.1 Fire divisions or clear spaces between buildings should be in accordance with NFPA 80A, *Recommended Practice for Protection of Buildings from Exterior Fire Exposures.*

D.2.3.1.2 Baled cotton storage generally has a fire load in excess of 73 kg/m^2 (15 lb/ft^2), which would place its classification, according to NFPA 80A, *Recommended Practice for Protection of Buildings from Exterior Fire Exposures,* in the "severe" category.

D.2.3.2 Fire walls should be of masonry and rated for at least 4 hours (based on NFPA 251, *Standard Methods of Tests of Fire Endurance of Building Construction and Materials*; ASTM E 119, *Standard Methods of Fire Tests of Building Construction and Materials*; and UL 263, *Standard for Safety Fire Tests of Fire Resistance of Building Construction and Materials*). For a complete description of construction Types I, II, III, IV, and V, see NFPA 220, *Standard on Types of Building Construction.* Such walls should be parapeted as follows:

(1) For wood frame [Type V (111-000)] and ordinary or heavy timber masonry [Type III (211-200) and Type IV (2HH)], construction parapets should extend at least 1.5 m (5 ft) above the highest point of any adjacent monitor or roof structure within 15 m (50 ft) of the fire wall. Where the monitors or the roof structure adjoins a fire wall, the parapet should extend not less than 2.3 m (7½ ft) horizontally from the vertical side of the roof structure. If intersecting end or side walls are other than masonry, the fire wall should extend outward 3.1 m (10 ft) beyond the end or side wall or should be "teed" at the ends 3.1 m (10 ft) from each side of the wall or should be "elled" 6.1 m (20 ft) and of an equivalent fire rating.
(2) For noncombustible construction [Type II (000)] other than that outlined in D.2.3.2(3), parapets should be at least 0.75 m (2½ ft) above the roof. If intersecting side walls are other than masonry, such wall construction should conform to the specifications of D.2.3.2(1).
(3) For noncombustible construction [Type II (222-111)] having masonry walls and with roofs of concrete, gypsum, or Class 1 (UL-classified) metal deck, the parapet should extend at least 0.3 m (12 in.) above the roof.
(4) For walls and roofs of fire-resistive construction [Type I (443-332)], parapets are not necessary.

D.2.3.3 Fire walls should be free of openings. Where openings are necessary, the number should be kept to the minimum necessary, and each side should be protected by an approved and listed 3-hour-rated fire door installed in accordance with NFPA 80, *Standard for Fire Doors and Fire Windows.* Doors should be automatic closing with detectors or fusible links installed on both sides of the opening and interconnected so that the operation of any single detector or fusible link closes both doors simultaneously.

D.2.3.4 Substantial guards of a size to protect fire doors from damage or obstruction should be provided.

D.3 Storage Arrangements.

D.3.1 General. This section applies to buildings protected by a sprinkler system in accordance with Section D.4, or to those not so protected. The tier heights, block sizes, and aisle widths outlined are permitted but represent recommended maximum and minimum limitations. Fire experience and fire tests of high-piled commodities have shown that lower pile heights, smaller block sizes, and wider aisles result in a substantial delay in fire spread and in providing for manual fire fighting. Automatic sprinkler effectiveness is also improved substantially, with a reduction in water demand and a decrease in the quantity of goods damaged.

D.3.1.1 One building, compartment, or section classed as a fire division should not contain more than 10,000 bales of cotton if protected by a sprinkler system in accordance with Section D.4, nor more than 5000 bales if not so protected. *(See D.2.3.)*

D.3.2 Storage Blocks.

D.3.2.1 Storage blocks, tiered or untiered, or in racks, should be limited to 700 bales of compressed cotton or 350 bales of flat cotton. *(See* D.3.3.4 *for a permitted variation and also Table A.3.3.4 for typical cotton bale types and approximate sizes.)*

D.3.2.2 The height of tiered or rack storage should be limited to a nominal 4.6 m (15 ft). Rack storage, as used in this document, contemplates baled cotton in a skeleton steel pipe or tubular frame, without shelving, and is limited to a single- or double-row configuration not in excess of two bales deep. Any variation could create a serious handicap to automatic sprinklers that is beyond the design capability and should be referred to the authority having jurisdiction.

D.3.2.3 Rack storage should not extend over aisles or doorways.

D.3.2.4 Racks should not be loaded beyond their design capacity and should be designed for seismic conditions in areas where seismic resistance for buildings is required.

D.3.3 Aisles.

D.3.3.1 Aisles should be provided and maintained to minimize the spread of fire and to allow convenient access for fire fighting, removal of storage, and salvage operations.

D.3.3.2 At least one main aisle, 3.7 m (12 ft) or more in width, should be provided in each fire division and arranged to subdivide the storage into two or more approximately equal areas.

D.3.3.3 Cross aisles separating each storage block should be at least 1.2 m (4 ft) in width. The recommended 1.2-m (4-ft) aisles allow sprinkler water to penetrate the lower areas of storage. However, it should be noted that for aisles less than 2.4 m (8 ft) in width, a fire can be expected to communicate readily from one block to another, especially in the case of an easily ignitible commodity such as cotton fiber.

D.3.3.4 Where a 4.6-m (15-ft) cross aisle is provided after every fourth or fifth tiered block, each storage block can be increased to 800 bales of compressed cotton and 400 bales of flat cotton. The purpose of this alternate method of tiered storage is to encourage wider cross aisles at least intermittently, without reducing the recommended storage capacity, as an aid in reducing the flameover fire potential. Because of the increase in block sizes, however, it is recommended that the authority having jurisdiction be consulted prior to practicing this method.

D.3.3.5 Cross aisles separating each single- or double-row rack storage configuration should be at least 3.1 m (10 ft) in width.

D.3.3.6 Aisles should be maintained free of loose cotton fibers.

D.3.4 Freshly Ginned Cotton Bales. See D.5.4.

--`,,,-`-`,,`,,`,`,,`---

Copyright National Fire Protection Association
Provided by IHS under license with NFPA
No reproduction or networking permitted without license from IHS
Not for Resale

D.3.5 Storage of Commodities Other than Cotton.

D.3.5.1 Cotton warehouses, in general, can be used for the storage of other commodities, subject to the following:

(1) The storage of other commodities in a building is permitted where baled cotton is not stored.
(2) High-hazard commodities, such as nitrates or similar oxidizing materials, flammable liquids or gases, explosives, or materials of a highly combustible nature, should not be permitted where baled cotton is stored in the fire division.
(3) Any commodities that could be hazardous in combination with each other should be stored so that they cannot come in contact with each other.

D.3.5.2 Where it is necessary to store other commodities with baled cotton storage, a clear space of at least 4.6 m (15 ft) should be maintained between the baled cotton storage and other commodities.

D.3.5.3 Where commodities of different classifications are permitted and stored in the same building, whether on a seasonal or other basis, the protection should be adequate for the most hazardous material. *(For protection of other commodities, refer to the main body of this standard or to the other applicable NFPA storage standards.)*

D.3.6 Clearances.

D.3.6.1 Proper clearances from lights or light fixtures should be maintained to prevent possible ignition. Incandescent light fixtures should have guards to prevent ignition of a commodity from hot bulbs where the possibility of contact exists.

D.3.6.2 No storage should be located within 0.9 m (3 ft) of any electrical switch or panel boards and fuse boxes.

D.3.6.3 Baled cotton storage and other combustibles should be kept at least 1.2 m (4 ft) from fire door openings so that the transmission of fire through a door opening is minimized.

D.3.6.4 At least 0.6 m (2 ft) of clearance should be maintained around all doors (other than as indicated in D.3.6.3), fire protection equipment (including automatic sprinkler risers, controlling valves, hose stations, and portable extinguishers), and telephones for accessibility.

D.3.6.5 A clearance of at least 0.9 m (3 ft) should be maintained between the top of storage and the roof or ceiling construction in order to allow sufficient space for the effective use of hose streams in buildings not equipped with automatic sprinkler protection.

D.4 Fire Protection.

D.4.1 Automatic Sprinkler Systems.

D.4.1.1 Automatic sprinkler protection is not part of the recommendations of this annex. However, it is unfortunate that, in a fire situation, human response is, in most cases, unreliable in the first critical moments of fire development. Sprinkler protection is, therefore, the most reliable method of fire detection and suppression. Property owners are encouraged to provide sprinkler protection as the best means of minimizing a large loss. *(See D.3.5 for sprinkler protection for other than cotton fiber storage.)*

D.4.1.2 Automatic sprinkler systems, where provided, should be installed in accordance with NFPA 13, *Standard for the Installation of Sprinkler Systems*, where modified by this annex.

D.4.1.3 Clearance between the top of the storage and the sprinkler deflectors should be at least 0.45 m (18 in.). Building heights should allow for proper clearance between the pile height and sprinkler deflectors. Fire tests of high-piled storage have shown that sprinklers are generally more effective if located 0.45 m to 1.4 m (1½ ft to 4½ ft) above the storage height.

D.4.2 Water Supplies.

D.4.2.1 The total water supply available should be sufficient to provide the recommended sprinkler discharge density over the area to be protected, plus a minimum of 2000 L/min (500 gpm) for hose streams.

D.4.2.2 Water supplies should be capable of supplying the total demand for sprinklers and hose streams for not less than 2 hours.

D.4.2.3 Recommended water supplies contemplate successful sprinkler operation when installed. However, because of the flameover fire potential and inherent unfavorable features of cotton warehousing, there should be an adequate water supply available for fire department use.

D.4.3 Hydrants. At locations without public hydrants, private hydrants should be provided in accordance with NFPA 24, *Standard for the Installation of Private Fire Service Mains and Their Appurtenances*.

D.4.4 Manual Inside Protection.

D.4.4.1 Small Hose. In buildings of 1380 m^2 (15,000 ft^2) or larger, small hose [38 mm (1½ in.)], with combination water spray nozzle, should be provided to reach any portion of a storage area with due consideration to access aisle configuration with a maximum length of 30 m (100 ft) of hose. Such small hose should be supplied from one of the following:

(1) Outside hydrants
(2) A separate piping system for small hose stations in accordance with NFPA 14, *Standard for the Installation of Standpipe and Hose Systems*
(3) Valved hose connections on sprinkler risers where such connections are made upstream of the sprinkler control valves
(4) Adjacent sprinkler systems in accordance with NFPA 13, *Standard for the Installation of Sprinkler Systems*

D.4.4.2 Portable Fire Extinguishers. Portable listed fire extinguishers should be provided in accordance with NFPA 10, *Standard for Portable Fire Extinguishers*, and as amended by this section. Up to one-half of the required complement of portable fire extinguishers for Class A fires can be omitted in storage areas where fixed small hose lines are installed in accordance with D.4.4.1.

D.4.4.2.1 Cotton and its wrappings represent a Class A fire. Experience has shown that extinguishment using "wet water" — a chemical agent additive to lower the surface tension of water, thus increasing its penetrating and spreading qualities — is the most effective on baled cotton fires.

Plain water is effective on surface fires but lacks the penetrating power of wet water.

Dry chemical extinguishers using sodium bicarbonate, potassium bicarbonate, or potassium chloride base powders have been used to control a surface fire on baled fibers and work mainly by coating the fiber with the fire-retardant powder. However, such chemicals do not affect a smoldering or burrowing fire beneath the surface.

Copyright National Fire Protection Association
Provided by IHS under license with NFPA
No reproduction or networking permitted without license from IHS
Not for Resale

D.4.4.2.2 Additional listed extinguishers, suitable for Class B and C fires, or multipurpose types, should be provided at each press location and for each motorized vehicle or area of hazard other than Class A.

D.4.4.3 Wetting Agent Extinguishing Units.

D.4.4.3.1 Pressurized, wheeled, listed, wetting agent extinguishing units, as specified in NFPA 18, *Standard on Wetting Agents*, can be used subject to the authority having jurisdiction in lieu of Class A conventional types or small hose lines, provided the following:

(1) The unit(s) has an equivalent extinguishing effectiveness of 20A for each 1380 m^2 (15,000 ft^2) of floor area or less.
(2) The unit(s) has an equivalent extinguishing effectiveness of 40A or more for each 2760 m^2 (30,000 ft^2) of floor area.

D.4.4.3.2 Placement of extinguishing units should be at locations readily accessible to the main aisles and properly protected from damage.

D.4.4.4 Nonfreezing-Type Extinguishers. Extinguishers should be of the nonfreezing type or protected against freezing where necessary.

D.4.5 Alarm Service.

D.4.5.1 Automatic sprinkler systems should have approved central station, local, auxiliary, remote station, or proprietary waterflow supervised alarm service. Local waterflow alarm service is permitted where standard guard service is provided in accordance with NFPA 601, *Standard for Security Services in Fire Loss Prevention*. Alarm service should comply with *NFPA 72®*, *National Fire Alarm Code®*.

D.4.5.2 Valves should be supervised in accordance with NFPA 13, *Standard for the Installation of Sprinkler Systems*.

D.4.6 Fire Emergency Planning.

D.4.6.1 Arrangements should be made to allow rapid entry into the premises by the municipal fire department, police department, or other authorized personnel in the case of fire or other emergency.

D.4.6.2 Industrial fire brigades, where provided, should be in compliance with NFPA 600, *Standard on Industrial Fire Brigades*.

D.4.6.3 Manual fire-fighting operations should not be considered to be a substitute for sprinkler operation. The sprinkler system should be kept in operation during manual fire-fighting operations until visibility has improved so that the fire can be clearly seen and the extent of fire has been reduced to a mop-up stage. It is essential that charged hose lines be available before venting is started because of a possible increase in fire intensity. When a sprinkler valve is closed, a designated person should remain at the valve so it can be opened promptly if necessary. The water supply for the sprinkler system should be augmented, where possible, and care should be exercised so that the water supply for the sprinkler system is not rendered ineffective by the use of excessive hose streams.

D.4.6.4 Fire departments should be encouraged to make periodic inspections of the property in cooperation with management and personnel for the purposes of loss prevention and pre-fire planning. For further information, see NFPA 13E, *Recommended Practice for Fire Department Operations in Properties Protected by Sprinkler and Standpipe Systems*.

D.4.6.5 A fire watch should be maintained when the sprinkler protection is not in service.

D.5 Yard Storage.

D.5.1 General.

D.5.1.1 This section applies to baled cotton storage yards designated for that purpose. Generally, yards are at or convenient to compression warehouses and gins but can include storage at locations remote from routine operations.

D.5.1.2 This section refers to seed cotton trailers or modules, vehicles, incinerators, and other facilities, or exposures from same, only for the purpose of establishing recommended distances to designated yard storage areas.

D.5.2 Site. Preference should be given to locations having adequate public fire and police protection, adequately supplied fire hydrants for protection of yard areas, good drainage, all-weather roads or driveways for emergency vehicle use, and remoteness from buildings or other combustible storages or facilities that could constitute an exposure hazard.

D.5.3 Storage Arrangements.

D.5.3.1 Tiered storage is not recommended; however, yard or outdoor storage conditions can necessitate storage methods other than those outlined. The authority having jurisdiction should be consulted for approval in such cases.

D.5.3.2 Storage should be arranged to provide reasonable fire breaks and ready access for fire fighting.

D.5.3.3 A row of storage should be limited to 100 bales.

D.5.3.4 Maximum storage limitations should be as follows:

(1) Protected block, 10 rows (1000 bales)
(2) Unprotected block, five rows (500 bales)
(3) Protected yard, five protected blocks (5000 bales)
(4) Unprotected yard, five unprotected blocks (2500 bales)
(5) Protected group yard, four protected yards (20,000 bales)
(6) Unprotected group yard, four unprotected yards (10,000 bales)

D.5.3.5 Minimum clear spaces should be as follows:

(1) 3.1 m (10 ft) between parallel rows and 7.6 m (25 ft) between rows arranged end-to-end
(2) 15 m (50 ft) between protected or unprotected blocks
(3) 60 m (200 ft) between protected or unprotected yards
(4) 300 m (1000 ft) between protected or unprotected group yards

D.5.3.6 Rows should be arranged so that prevailing winds blow in the direction of the parallel clear spaces between rows.

D.5.4 Quarantine Yards.

D.5.4.1 Freshly ginned cotton bales, commonly called *fire-packed bales*, are highly subject to insidious fires originating from the ginning operation. Known or suspect fire-packed bales should be marked as such and kept segregated from other contents or buildings for a period of not less than 5 days. If no fire is detected after that period, the bales then can be handled in a normal manner.

D.5.4.2 A clear space of at least 30 m (100 ft) from any yard storage and 7.6 m (25 ft) from all buildings should be established as a quarantine area for known or suspect fire-packed bales.

D.5.4.3 Known or suspect fire-packed bales should be separated from each other by at least a 3.1-m (10-ft) clear space.

Copyright National Fire Protection Association
Provided by IHS under license with NFPA
No reproduction or networking permitted without license from IHS
Not for Resale

D.5.5 Unobstructed Clear Space.

D.5.5.1 Except as noted in D.5.5.1 unobstructed clear space to designated yard storage should be maintained as follows:

(1) 30 m (100 ft) to any approved sprinklered building
(2) 60 m (200 ft) to any nonapproved sprinklered or nonsprinklered building
(3) 60 m (200 ft) to an approved incinerator
(4) 150 m (500 ft) to a nonapproved incinerator or open fire
(5) 30 m (100 ft) to vehicle and seed trailer, or module parking areas and trash piles
(6) 15 m (50 ft) to roadways and railroad main lines and sidings
(7) 60 m (200 ft) upwind of any reconditioning activity
(8) Clear and clean of loose cotton, dry grass, weeds, and combustible trash for a distance of at least 15 m (50 ft) around the yard perimeter

D.5.5.2 In the case of buildings, sprinklered or unsprinklered, the clear space can be reduced up to 50 percent if construction is fire-resistive or if facing walls are masonry and parapeted with adequately protected openings. This area reduction can also be permitted to be applied to noncombustible buildings of a type limited to corrugated iron or asbestos panel walls and roof on a steel frame.

D.5.6 Fire Protection.

D.5.6.1 To qualify as a protected yard, hydrants should comply with D.4.3, except where amended by Section D.5.

D.5.6.1.1 All areas of yard storage should be within 152.5 m (500 ft) of a fire hydrant. Adequate clearance should be maintained between storage and hydrants.

D.5.6.1.2 Hydrant equipment for each yard group (20,000 bales) should consist of the following:

(1) 75 m (250 ft) of 65-mm (2½-in.) hose
(2) 90 m (300 ft) of 38-mm (1½-in.) hose with provisions to "Y-connect" to the 65-mm (2½-in.) hose
(3) Combination water spray nozzles
(4) Proper wrenches for hydrant operation and hose connections

D.5.6.1.3 Water available to the most remote yard hydrants should be capable of delivering at least 2000 L/min (500 gpm) at an effective pressure for at least a 2-hour period.

D.5.6.2 Approved extinguishing units should be provided on the basis of an equivalent 40A rating for each protected or unprotected yard area *(see D.5.3)* or greater fraction thereof.

D.5.6.2.1 Subject to the authority having jurisdiction, a motorized wet water unit(s) can be substituted for that specified in D.5.6.2 provided that a unit of 1000 L (250 gal) or greater capacity is provided for each group yard area storing up to 20,000 bales.

D.5.6.2.2 Placement of wheeled or motorized units should be at readily accessible locations within 75 m (250 ft) of each yard, protected from damage, and maintained in good operating condition at all times.

D.5.6.3 Water containers and pails, if used, should be distributed at a ratio of one 150-L (40-gal) or greater container with two pails for each 100 bales of storage. However, wheeled wet water pressure extinguishers are permitted in lieu of containers and pails.

D.5.6.4 All motorized vehicles used in designated yard areas should be equipped with a listed multipurpose dry chemical extinguisher of a size appropriate for the anticipated hazard. *(See D.4.4.2 for information on portable fire extinguishers.)*

D.5.6.5 A suitable and reliable means of communication should be available to summon the fire department or other appropriate personnel promptly, to sound a general alarm in the case of fire or other emergency, or both.

D.5.6.6 Reference should be made to D.4.6 for fire emergency planning and procedures that apply to yard storage.

D.5.7 Yard Maintenance and Operations.

D.5.7.1 Smoking. Smoking should be strictly prohibited within 30.5 m (100 ft) of yard storage areas, and "No Smoking" signs should be posted conspicuously. *(See D.6.6.)*

D.5.7.2 Internal Combustion Equipment. All internal combustion equipment used in or around yard storage areas should be equipped with a suitable spark arrester-type muffler properly maintained and otherwise approved by the authority having jurisdiction.

D.5.7.3 Guard Watch Service.

D.5.7.3.1 Guard watch service should be provided throughout all designated yard storage areas during all shutdown periods when fewer than 5 days have passed after cotton bales have been ginned or when the total stock exceeds 1000 bales.

D.5.7.3.2 Hourly rounds should be made and recorded during all nonworking hours using an approved and listed portable clock and having key stations situated to ensure complete coverage of the area of responsibility. Watch service information should be obtained from NFPA 601, *Standard for Security Services in Fire Loss Prevention.*

D.6 Administration, Buildings, Equipment, Maintenance, and Operations.

D.6.1 Administration. The administration of buildings and equipment, and the maintenance thereof, is an important consideration in the reduction of fire incidence and loss. The finest buildings and protective features can be abrogated quickly by neglect of the continuous, necessary maintenance of fire loss prevention programs and protective equipment. Thus, management at all levels plays a critical part in the reduction of fire loss.

In addition to the recommendations outlined in this annex, the liaison between management and personnel should include a meaningful loss prevention program that provides the following:

(1) Encourages loss prevention habits
(2) Teaches the prompt sounding of alarms
(3) Minimizes panic and effects safe evacuation
(4) Instructs key personnel in the effective utilization of fire-extinguishing equipment and other protective features
(5) Teaches basic salvage and cleanup techniques to minimize the downtime of operations

D.6.2 Mechanical-Handling Equipment.

D.6.2.1 Industrial Trucks. Power-operated industrial trucks and mobile equipment should comply with NFPA 505, *Fire Safety Standard for Powered Industrial Trucks Including Type Designations, Areas of Use, Conversions, Maintenance, and Operation.* Cotton storage and handling areas are defined as Class III, Division 2 hazardous areas and require vehicles designated as types DS, DY, ES, EE, EX, GS, LPS, and GS/LPS.

--`,,`-`-`,,`,,`,`,,`---

Copyright National Fire Protection Association
Provided by IHS under license with NFPA
No reproduction or networking permitted without license from IHS
Not for Resale

D.6.2.1.1 Gasoline and diesel fuel should be prohibited in cotton storage areas, on platforms, and in exposing yard areas. Fueling should be done outside at a well-detached location in accordance with NFPA 30, *Flammable and Combustible Liquids Code*.

D.6.2.1.1.1 Gasoline and diesel fuel contained in the vehicle tanks are permitted.

D.6.2.1.2 Liquefied petroleum gas (LP-Gas) fuel containers shall be exchanged or removed only outdoors. The valve at the fuel container should be closed and the engine allowed to run until the fuel line is exhausted. Tanks should be refueled only at well-detached locations. LP-Gas fuel systems on LP-Gas dual fuel-powered trucks should be in accordance with the applicable provisions of NFPA 58, *Liquefied Petroleum Gas Code*.

D.6.2.1.3 Charging equipment for storage batteries should be in a separate area, room, or building designated for that purpose. If located in a separate room, the room should be lined with substantial noncombustible materials constructed to exclude "fly" or lint. Charging areas should be kept free of extraneous combustible materials and trash. Adequate ventilation should be provided to minimize concentrations of hydrogen gas during charging.

D.6.2.1.4 All mechanical equipment and refueling areas should be kept free of accumulations of fibrous lint, oil, and trash with particular attention paid to the internal areas of vehicles.

D.6.2.2 Maintenance and Operations. The following recommendations should be met prior to the entrance or use of industrial trucks in a cotton storage or handling area:

(1) All traces of fuel should be cleaned from the vehicle before it is started.
(2) Vehicles that have exhausted fuel tanks should be towed to the assigned fueling area for refueling.
(3) Repairs should be prohibited in cotton storage or handling areas.
(4) Alterations of the fire safety features should be prohibited.
(5) Maintenance procedures should comply with those outlined in NFPA 505, *Fire Safety Standard for Powered Industrial Trucks Including Type Designations, Areas of Use, Conversions, Maintenance, and Operation.(See D.6.2.1.)*

D.6.2.3 Interplant Haulage. Tractors used for interplant hauling should be equipped with a properly maintained, suitable, spark arrester-type muffler.

D.6.2.4 Motorized Vehicles. Motorized vehicles, other than those specified under D.6.2.1, should not be permitted to enter any cotton storage area. A loading platform should be located so that trucks cannot fully enter inside the closing walls of a warehouse with the truck space inclined away from the platform and lower than the platform. The loading area should be closed off from any under-floor building space.

D.6.2.5 Equipment Storage. Mechanical-handling equipment, when not in use, should be stored outside.

D.6.3 Building Service and Equipment.

D.6.3.1 Electrical Installation.

D.6.3.1.1 It is recommended that cotton storage and handling areas be free of electrical installations. However, installations that are necessary should comply with NFPA 70, *National Electrical Code®*, for Class III, Division 2 hazardous areas.

D.6.3.1.2 Electrical extension cords should be prohibited in storage areas. If portable lights are necessary, battery-powered lanterns or flashlights can be used.

D.6.3.2 Open-Flame Heating Devices. Open-flame heating devices, permanent or temporary, should be prohibited.

D.6.3.3 Shops and Equipment.

D.6.3.3.1 Repairing and reconditioning and boilers or similar equipment should be prohibited in cotton storage areas. Separate buildings should be provided for such purposes or should be separated from storage areas by a standard 2-hour fire wall.

D.6.3.3.2 The term *reconditioning* applies mainly to cotton and is defined as any opening, drying, cleaning, or picking of bales of loose cotton by any means whatsoever, except for the following:

(1) Air drying (not compressed air) of baled cotton at room temperature where not more than one band is removed from each bale being so dried.
(2) The picking of baled cotton by hand where not more than five bales are in the process of being picked on the premises at any one time, and where at least two bands remain on each bale so picked. Removal of more than one band is to be considered part of the picking process.
(3) The opening of bales in the press room for pressing or recompressing.
(4) The cleaning of baled cotton by brushing (manual only) where the process employed does not remove an appreciable quantity of lint.

Mechanical reconditioning operations should confine lint and "fly" to the reconditioning building and should be separated from cotton storage (or compress) by a standard fire wall without openings or by unobstructed clear spaces as outlined in Section D.2.

D.6.4 Cutting and Welding.

D.6.4.1 Where cutting and welding operations are necessary, the precautions contained in NFPA 51, *Standard for the Design and Installation of Oxygen–Fuel Gas Systems for Welding, Cutting, and Allied Processes*, should be followed.

D.6.4.2 Welding, soldering, brazing, or cutting should be permitted only by the authorization of management. Proper precautions should be observed and should include the following:

(1) A supervisor should be assigned to the operation.
(2) The area should be made fire-safe.
(3) Work should be removed to a safe area, where possible.
(4) Where these operations are performed on equipment or building components that cannot be moved, there should be no storage below or within a 10.7-m (35-ft) radius.
(5) Floors should be swept clean and wooden floors wet down within the 10.7-m (35-ft) radius.
(6) The cutting and welding equipment to be used should be in good operating condition and properly maintained. Personnel operating arc welding or cutting equipment should be protected from possible shock.
(7) Openings and cracks in wood construction should be tightly covered to prevent the passage of sparks.
(8) All cotton bordering the area should be protected by flameproofed covers or otherwise shielded with metal or asbestos guards or curtains. The edges of the covers at the floor should be tight to prevent sparks from escaping. This precaution should extend to where several covers are used to protect a large storage pile.

--`,,,-`-`,,`,,`,`,,`---

Copyright National Fire Protection Association
Provided by IHS under license with NFPA
No reproduction or networking permitted without license from IHS
Not for Resale

(9) All fire protection equipment should be in service and ready for immediate use.
(10) A fire watch should be maintained and equipped with a portable extinguisher during these operations for not less than 1 hour following the completion of open-flame operation.

D.6.5 Waste Disposal.

D.6.5.1 Rubbish, trash, and other waste material should be disposed of at regular intervals. Approved waste cans with self-closing covers should be used where needed. Open fires and incinerator operations should be prohibited within 30 m (100 ft) of any cotton storage building.

D.6.5.2 For additional details, see NFPA 82, *Standard on Incinerators and Waste and Linen Handling Systems and Equipment.*

D.6.6 Smoking.

D.6.6.1 Smoking should be strictly prohibited, except in locations prominently designated as safe smoking areas. "No Smoking" signs should be posted conspicuously in prohibited areas.

D.6.6.2 The cooperation of employees is more easily secured when a reasonable smoking policy is adopted with smoking allowed in specified locations where there is little hazard, at specified times, and under suitable supervision. Complete prohibition is likely to lead to surreptitious smoking in out-of-the-way locations where the hazard is most dangerous.

D.6.7 Maintenance and Inspection.

D.6.7.1 Fire walls, fire doors, fire door guards, and floors should be maintained in good repair at all times.

D.6.7.2 NFPA 25, *Standard for the Inspection, Testing, and Maintenance of Water-Based Fire Protection Systems,* should be referenced for information on the maintenance and service of sprinkler systems and water supplies.

D.6.7.3 All portable and manual fire-extinguishing equipment should be maintained and serviced.

D.6.7.4 As an aid in maintaining fire protection features and equipment in full service at all times, Figure D.6.7.4 provides a simple self-inspection form that contains a checklist of loss prevention principles. This sample form can be used without change or as a guide in establishing a specialized form to suit individual facilities.

D.6.8 Grass and Weeds. All dried grass and weeds should be kept clear of buildings for at least 15 m (50 ft).

D.7 Information on Fighting Fires in Baled Cotton.

D.7.1 Introduction. The information contained in this section is a summary of knowledge gained over the years by cotton warehouse personnel, fire fighters, and insurance authorities in fighting fires in the Cotton Belt.

A baled cotton fire has peculiarities that should be understood and respected if a large loss is to be avoided with minimum danger to personnel. Automatic sprinklers, if properly designed and supplied, can be expected to control a baled cotton fire where storage methods outlined in this standard are followed, but extinguishment should not be expected.

The primary rule for any fire is always to call the responding fire department first. Fighting fires of any type is a profession and, even where a well-trained private fire organization is available, professional aid should be effected as soon as possible, and plant personnel should not be unduly exposed to the peril.

The myriad of small fibers that make up a cotton bale, especially a naked cotton bale or one wrapped in burlap, and cover its surface offer a highly vulnerable source of ignition as well as the potential for a rapid flame spread, also known as *flameover.* A flameover is usually followed by a slower flame spread at the surface, then tenacious burrowing into the pile between bales and penetration of the interiors of individual bales. High-density bales are less vulnerable to a burrowing fire, but the possibility of such a fire should not be ignored.

D.7.2 Causes. Some of the causes of cotton fiber fires include breaking metal bands (ties) that strike other metallic objects resulting in sparks, fire-packed bales, electrical faults, mechanical equipment (e.g., defective lift trucks), friction (e.g., bale ties rubbing together, railroad boxcars), lightning, cutting and welding, and smoking. Sparks from bale ties and fire-packed bales appear to be the most prominent fire cause. Incendiarism and exposures are also a consideration.

D.7.3 Incipient Stage. If caught in the incipient stage, control can often be effected, provided the proper procedures are followed. Portable extinguishing equipment, such as containers and pails, or pressurized or pump-type water units, can be used to wet down the exterior of the bale quickly.

If small extinguishers are not successful, portable, wheeled, wetting agent tanks or standpipe hose, or both, should be used. The last resort is hose streams from outside hydrants. Extreme caution should be exercised when using straight hose streams, as the force of the stream could scatter the burning wads or portions of cotton over a wide area. Spray or fog nozzles are recommended, but, if not available, it might be possible to deflect a solid stream off the walls, roof, or other solid object.

Once the exterior of the bale(s) is fully wet down and fire is suppressed, the bales involved then should be removed to an outside, safe location for final extinguishment.

> **CAUTION:** An obviously burning bale should never be dragged or mechanically moved down aisles, as this is likely to spread the fire to bales bordering the aisle. *(See D.7.9.)*

D.7.4 Active Stage in Sprinklered Buildings. If a fire progresses well beyond the incipient stage or involves more than a few bales and further fire spread is likely, the building could readily prove untenable and dense smoke could quickly obscure vision. It then is best to have all personnel vacate the building to a point of safety. As drafts, including early venting through roofs and walls, are undesirable, it is essential to leave the building unventilated and close all doors and cut off all possible drafts to the building or section involved. This reduces available oxygen to the fire, and the dense smoke suppresses fire intensity. Drafts not only provide fresh air to increase fire intensity but also can blow heat away from the fire, opening sprinklers beyond the fire area and possibly overtaxing the available water to the sprinkler system.

The sprinkler system should be given a chance to do its job — do not ventilate! Ventilating a cotton fire can cause it to flash out of control, spread with explosive violence, and open an excessive number of sprinklers.

After the fire is under control of the sprinkler system, the compartment door should be opened only enough to use fire hose or to enter and remove the cotton. The smoldering bales should be removed to the outside as soon as possible for individual attention. Extreme caution should be exercised when entering a fire area. Entry should be on the downwind side, if

Copyright National Fire Protection Association
Provided by IHS under license with NFPA
No reproduction or networking permitted without license from IHS
Not for Resale

WAREHOUSE NO. _____	COMPARTMENT NO. _____

	YES	NO
General Housekeeping		
1. Inside Buildings		
(a) Floor and dock areas clean of loose cotton and trash?	☐	☐
(b) Covered metal containers for loose cotton and trash?	☐	☐
2. Outside Buildings		
(a) Surrounding areas free of dried grass, weeds, and combustible trash?	☐	☐
Smoking		
1. Evidence of smoking in unauthorized areas?	☐	☐
2. Signs posted and readily visible?	☐	☐
Electrical Equipment		
1. Extension cords prohibited?	☐	☐
2. Storage in contact with lights or wiring?	☐	☐
3. Wiring properly supported and undamaged?	☐	☐
4. Circuits properly fused?	☐	☐
5. All panels, junction, switch, and receptacle boxes covered?	☐	☐
Mechanical Equipment		
1. Listed for fiber storage (Type DS, DY, ES, EE, EX, GS, or LPS)?	☐	☐
2. Spark-retardant mufflers maintained?	☐	☐
3. Refueled outside at designated area?	☐	☐
4. Stored outside when idle?	☐	☐
5. General condition and maintenance good?	☐	☐
Buildings		
1. Fire walls in good repair, including around fire door openings?	☐	☐
2. Fire doors in proper working condition and tested for ease of closing each week? (Overhead, roll-type doors should be tested at least annually.)	☐	☐
3. Fire door guards in place and maintained?	☐	☐
4. Floor and exterior walls in good repair?	☐	☐
5. Exterior wall openings have doors and windows in place that close properly and lock?	☐	☐
6. Space under grade floor, if any, closed off?	☐	☐
Storage Arrangements		
1. Storage Blocks		
(a) Within prescribed height [4.6 m (15 ft)]?	☐	☐
(b) Sprinkler heads unimpaired [457-mm (18-in.) clearance]?	☐	☐
(c) Block sizes limited to 700 bales pressed or 350 flat?	☐	☐
(d) Tiered storage stable and secure?	☐	☐
2. Aisles		
(a) At least one main aisle 3.7 m (12 ft) or more in width?	☐	☐
(b) Cross or work aisles at least 1.2 m (4 ft) in width?	☐	☐
(c) Any damaged bales, broken bands, or wet stock?	☐	☐

	YES	NO
Fire Department		
1. Phone number prominently displayed at each phone?	☐	☐
2. Personnel instructed on procedure in case of fire?	☐	☐
Watch Service		
1. Making regular rounds?	☐	☐
2. All key stations punched?	☐	☐
3. Records checked, dated, and filed?	☐	☐
Fire Alarm Service		
1. Automatic fire alarm system in service?	☐	☐
2. Manual pull stations clearly marked and accessible?	☐	☐
3. System tested within required frequency?	☐	☐
Manual Extinguishing Equipment Portable Extinguishers		
1. Hand Units		
(a) Properly placed and accessible?	☐	☐
(b) Recharged within the last year?	☐	☐
(c) All in good condition?	☐	☐
2. Containers and Buckets		
(a) Properly distributed?	☐	☐
(b) Kept full?	☐	☐
(c) Two buckets per barrel?	☐	☐
3. Mobile Equipment		
(a) Properly placed and protected from damage?	☐	☐
(b) Charged and ready for service?	☐	☐
Inside Hose		
1. Hose and nozzle attached to each?	☐	☐
2. Racked and in good condition?	☐	☐
3. Easily accessible and ready for use?	☐	☐
4. Valves operate readily?	☐	☐
Yard Hydrants and Hose Houses		
1. Readily accessible?	☐	☐
2. Hose racked or reeled and in good condition?	☐	☐
3. Nozzles, spanners, hydrant wrench available?	☐	☐
4. Hydrants operable?	☐	☐
5. General condition: Good ☐ Poor ☐		

Note: 25.4 mm = 1 in.; 0.3048 m = 1 ft.

REMARKS (Report on any unusual conditions and action taken):

Report by: **Date:**

FIGURE D.6.7.4 Sample Loss Prevention Self-Inspection Form for Baled Cotton Storage.

Copyright National Fire Protection Association
Provided by IHS under license with NFPA
No reproduction or networking permitted without license from IHS
Not for Resale

possible, to avoid creating draft conditions that could cause the fire to reignite. It is important to remain alert for gas explosions. If the fire appears to flare up again, the building should be vacated immediately and the doors again should be closed tightly and the sprinkler system should be allowed to regain control.

D.7.5 Sprinkler Failure. If the sprinkler system fails to maintain fire control, then hose streams should be used, preferably through door openings only large enough for the hose.

Where it is apparent that the fire is beyond the control of the sprinklers and the building is nearing the point of collapse, the control valve(s) to the sprinkler systems in the building or section involved should be shut off to conserve water for hose stream use.

D.7.6 Active Stage in Nonsprinklered Buildings. Immediately on arrival at the fire, all openings to the compartment involved should be closed. As many hose lines as possible, preferably supplied with a wetting agent, should be available. The doors should be opened only enough to allow the use of the hose in a spray-like fashion. Caution should be exercised to open these doors slowly to minimize the chance of an explosion. The doors on the opposite sides of the compartment should not be opened, which would allow a cross-draft. Only the door on the lee side, and not the windward side, of the building should be opened.

D.7.7 Cotton Yard Fires. Conditions in a cotton yard fire are not as controllable as those in a warehouse fire, since draft conditions are almost entirely dependent upon the climatic conditions at the time of the fire. If an adverse wind prevails, a small involvement can easily become a catastrophe. Preplanning is particularly important in this case. Upon arrival at a cotton yard fire, the following steps should be taken immediately:

(1) If available, fire department connection to the hydrants should be utilized.
(2) Hose lines should be laid out.
(3) Using divided stream nozzles, water should be applied ahead and downwind of the fire and then worked toward the fire.
(4) Bales and dunnage should be checked underneath for fire.
(5) It is important to remain alert for flying sparks.
(6) The nearby uninvolved cotton should be removed to create a fire break.
(7) Burned cotton should be removed to a segregated area.

D.7.8 After Watch. Where the fire-involved cotton has been removed and leaves behind undamaged stock, a minute and unobserved spark often causes a rekindling of the previous fire with disastrous results. The involved area should be inspected and carefully cleaned. Hose lines and fire department watch should be maintained until the area is known to be safe. Before leaving the scene of the fire, responsible plant personnel should be advised that after watch should be kept for at least 24 hours. One of the most disastrous fires on record could possibly have been prevented with adequate after watch following a minor involvement.

D.7.9 Salvage Operations. Salvage is important, and every precaution should be taken to protect the salvage. The usual severity of a fire in a cotton warehouse, along with the appearance of the charred bales, is misleading with respect to the amount of remaining salvage.

Water does not damage cotton, and if the charred bales are kept cool with hose streams until proper salvage operation is begun, the quantity of the loss can be reduced substantially.

After the fire is brought under control, all bales involved should be removed to a safe outside location as quickly as possible and practicable. Each bale then should be handled individually in order to effect complete extinguishment. This extinguishment is best accomplished by the use of small hose lines or barrels and buckets, using a wetting agent known as wet water.

WARNING: Do not remove the bands or wires from the bales.

To do so exposes more lint to the fire and threatens the loss of the entire bale.

Salvage crews should be ready to move the cotton out of the involved shed as rapidly as possible. Extreme caution should be exercised in preparing and watching the path along which the burned bales are removed from the involved shed. Burning fibers of cotton are easily blown from the bale, especially in the haste and excitement of moving the bales outside. It could be necessary to move the uninvolved bales away from the exit route (or from the entire compartment) or even to make a hole in the side of the compartment. The spread of fire along the exit route caused by burning bales is not uncommon. The burning bales should be wetted down and moved to a safe, segregated place as soon as possible for individual attention.

The following are steps to be taken in the salvage operation:

(1) An open area, without exposures, into which the burning bales can be moved should be selected.
(2) A salvage crew should be stationed at the yard.
(3) A good supply of wetting agent should be available.
(4) A good supply of water should be available.
(5) Containers, pails, and stirrup pump-type extinguishers should be available, filled with wet water.
(6) Burning bales should be wetted down and removed from the fire area as soon as possible. They should be placed approximately 0.9 m (3 ft) apart in an open area away from other exposures.
(7) Care should be exercised in removing these bales so as not to start another fire in the process. If the side of the compartment is metal-clad or frame, it could be best to remove a portion of the side so that the cotton can be removed. Some warehouse personnel take the time to remove cotton from those compartments through which the burning bales travel before salvage operations are allowed to start. If there is any question regarding additional exposures, they should be removed, if possible, before moving the burning bales.
(8) Any outside blaze on the bale should be knocked down. The wet water should be applied to each smoldering spot on the bale. Often a handful of cotton soaked in the wet water can be applied directly on or into the smoldering spot. Cotton fires burrow into the bale, so it is necessary to apply the wet water as far into the hole as possible, soaking the area thoroughly. In order to be certain the fire is out, the burned cotton should be removed from each hot spot while applying wet water to the hole. When the area around the spot is no longer warm, it can be assumed that the fire has been extinguished.
(9) The bands from the bales should not be removed. To do so exposes more lint to the fire, and the bale will probably be a complete loss.
(10) Bales involved in a fire should be closely watched for at least 5 days after the last spark is believed to have been extinguished.

Copyright National Fire Protection Association
Provided by IHS under license with NFPA
No reproduction or networking permitted without license from IHS
Not for Resale

D.7.10 Fire-Packed Bales. During the cotton ginning operation, sparks, caused by stones, metal, or other foreign objects in the seed cotton striking metal parts of the gin, can ignite the fibers. Occasionally, a fire immediately erupts, but often the smoldering lint is carried onto the press box where it can be packed, undetected, into the bale. Usually the fire burns through to the outside of the bale within a few hours, but it can remain undetected for several days. Sometimes the odor is noticeable or the bale feels excessively warm. These bales are known as fire-packed bales and are a major cause of fires in baled cotton.

The recommended procedure for handling and extinguishing fire-packed bales is as follows:

(1) All known or suspect fire-packed bales should be stored in the open and segregated from buildings and other storage. They should be separated about 0.9 m (3 ft) from other such bales.
(2) These bales should be under constant surveillance to detect fire as soon as it moves to the surface.
(3) A supply of an approved wetting agent and at least one stirrup pump should be available at all times.
(4) When fire is detected, the area around the hot spot should be wetted immediately to prevent the spread of the fire. The hot spot then should be saturated with wet water. The burned cotton should be removed by hand while constantly applying water to the hole. This procedure should be continued until no warm areas are detected. It is not uncommon for several fires to be packed into a single bale.
(5) Do not remove the bands from the bale, as this exposes more cotton fibers to ignition and usually results in the total loss of the bale.
(6) Fire-packed bales or bales suspected of being fire-packed should remain in quarantine and under surveillance for at least 5 days. After this time, they can be considered to be safe and handled in the regular manner.

Note that there is no set time after which a fire can be considered extinguished in a bale, as this depends on the thoroughness of extinguishment. However, 5 days after the fire is believed to have been extinguished is generally considered to be a rule-of-thumb safe period.

Annex E Recommendations for Fighting Rubber Tire Fires in Sprinklered Buildings

This annex is not a part of the requirements of this NFPA document but is included for informational purposes only.

E.1 Introduction. It is essential that the steps necessary for fighting rubber tire fires be understood by both the building occupant and the fire service to prevent unnecessary injury or loss of life and to prevent loss of fire control during overhaul. This activity necessitates emergency preplanning with the local fire department, building occupant, and others as deemed necessary.

Fire tests of rubber tire storage have indicated that smoke can quickly obstruct the visibility within a building and obscure the burning materials. Plans for the attack and extinguishment of the fire should be prepared in advance.

Because the products of combustion are harmful, all personnel assigned to interior functions should use breathing apparatus even before obscuration occurs.

Ventilation efforts should be carefully controlled. Drafts from open doors and windows allow fresh air to reach the fire and make control of the fire difficult. Doors and windows should be closed as soon as possible to limit the air supply to the fire and to allow control by automatic systems to be established.

Fire brigades should be trained and equipped with the necessary tools and equipment to respond to a fire emergency and, if possible, attack the fire prior to the arrival of the fire department.

Review of building and fire protection system plans should be part of the ongoing training of both the on-site personnel and fire departments.

A tire fire can progress quickly through the phases described in the following paragraphs, and each phase presents different conditions to responding emergency personnel. Items for consideration in the emergency preplanning program are provided for inclusion in such plans.

Observations at tire fire tests and accounts of actual fires have indicated that, while automatic sprinklers with adequate densities in approved configurations can control a fire, extinguishment by sprinklers alone normally does not occur. The four tests used also indicate that sprinkler protection can be overcome by the following:

(1) Storage exceeding the heights indicated in this standard
(2) Storage configurations that inhibit the movement of heat to the roof, slowing sprinkler operation, and inhibit the waterflow to the seat of the fire, reducing sprinkler effectiveness

E.1.1 Incipient Stage. This stage occurs within 2 to 5 minutes of ignition.

Important: Drafts from open doors increase the intensity of the fire and make control difficult. Doors should be closed as quickly as possible to isolate the fire area.

Important: Fire tests indicate that smoke obscuration occurs within 6 to 9 minutes of ignition, even when the fire is sprinkler controlled. Breathing apparatus could be needed even before obscuration occurs.

If caught in the incipient stage, control can be achieved using interior hand hose and portable extinguishers. Quick reaction is essential, as this window of opportunity no longer exists within 2 to 5 minutes of actual ignition, since the generation of heat and smoke make the area untenable. Dry chemical extinguishers have been found to be most effective but should be backed up with small hose, as the knock-down is only temporary.

Tires in the affected area should be removed from storage. Tires removed from storage should be taken out of doors, thoroughly soaked, and left where they cannot expose other combustibles. The area where the fire occurred should be closely watched for several hours for rekindling.

While the first sprinkler can be expected to operate within the first 2 to 5 minutes of ignition, the updraft from the fire can disrupt the sprinkler pattern to such an extent that the water might not get to the seat of the fire. After the first 4 minutes, the fire has generally progressed beyond the stage where portable extinguishers are effective and, within minutes, the smoke and carbon monoxide make the area untenable. Vision is obscured, and any personnel without breathing apparatus is at risk.

E.1.2 Active Stage. The active stage of the fire follows the initial stage and is generally defined as that period where the sprinkler system is establishing control over the fire.

Copyright National Fire Protection Association
Provided by IHS under license with NFPA
No reproduction or networking permitted without license from IHS
Not for Resale

Important: Even though the fire is sprinkler controlled, roof temperatures resulting from the tire fires can reach temperatures high enough to cause steel joists to deflect and possibly fail. In recent fire tests, gas temperatures at roof level ranged between 593°C and 788°C (1110°F and 1450°F) for 10 minutes. Roof steel exposed to this high gas temperature could deflect or fail if subjected to additional loading. Do not place personnel on roof to attempt ventilation.

Important: Local fire departments attempting to draft from the sprinkler supply system will decrease the sprinkler effectiveness. If possible, separate municipal hydrants should be identified for fire department use.

Important: As the sprinklers gain control of the fire, the smoke will turn from black to gray. A return to black smoke is an indication that the sprinklers are not controlling the fire. Pump and system pressure also should be monitored. Loss of system pressure is an indication of more sprinklers operating, pump failure, or loss of control.

Responding local fire departments should be arriving by this time. Building personnel should advise arriving fire personnel of the location of all occupants of the building. At this point, there is little for the fire department to do except to connect to the municipal water supply and prepare to supplement the fire protection system through the fire department connection.

Fire department personnel or maintenance personnel, or both, should respond to the fire pump room and work to maintain operation of the fire pump. System discharge pressure should be observed to determine if the pressure is stable. Unstable or decreasing discharge pressure indicates changes in the operating conditions of the fire protection system.

During this stage, the building is untenable, and obscured vision makes the use of hose streams questionable. It should be noted that, in buildings with smoke vents, longer use of fire hose could be possible, but at some risk to personnel. It is best to allow the sprinklers to take control of the fire. Most of the sprinklers will begin to operate within 15 to 20 minutes of ignition, if sprinkler control is effected. Sprinklers should be allowed to operate at least 60 to 90 minutes to gain control. Successful fire tests indicate that waterflow stabilizes within the first 20 minutes of the fire.

The building is best left unventilated at this time. As control is gained, the smoke will change from black to gray and will diminish in intensity. During this period, at least six charged 38-mm (1½-in.) hose lines should be laid out prepatory to entering the building. Portable flood lights should be secured as well as turn-out gear, breathing apparatus, and forklifts for the overhaul crew.

E.1.3 Critical Stage. The critical stage occurs between the final extinguishment and the ventilation of the building.

Important: Ventilation should be done slowly, and the sprinklers should be left in operation. A return to black smoke is an indication that control is being lost. If this happens, ventilation should cease, the building should be closed, and the sprinkler system should be allowed to regain control. It should be understood that, during the attempt to ventilate the building, the fire intensity can increase due to the addition of outside air. Additional sprinklers can be expected to operate during the ventilation effort. If control has been gained, extra sprinklers might make no difference in overall performance. If control has not been gained or is marginal, this increase in the number of operating sprinklers could make regaining control more difficult due to the overall increase in sprinkler demand. Unless there is a system failure, the sprinklers should regain control. If there is any doubt that control of the fire has been gained, the sprinkler system should be allowed to soak the fire for longer than 90 minutes.

Important: The officer in charge should have a contingency plan if control is lost due to a system failure. In the event that control of the fire is lost, as evidenced by such indicators as increasing smoke generation, loss of pressure at the fire pump discharge (indicating massive sprinkler operation), or collapsing roof, efforts should be directed toward preventing the spread of the fire beyond the area bounded by the fire walls. At this point, consideration should be given to shutting off the sprinklers in the fire area to provide water for protecting the exposures.

After 60 to 90 minutes and when the smoke intensity has diminished, the building should be ventilated around the periphery of the fire area. If control has been gained, the roof temperature will usually have cooled sufficiently to allow roof vents to be opened manually if they have not already opened automatically.

E.1.4 Overhaul. Although visible fire is no longer present, overhaul of the area of the fire should be conducted to be certain of complete extinguishment.

Important: Care should be taken that the hose streams do not lower the pressure or water supply to the sprinkler system. Sprinkler operation should cease only when the fire chief is certain that hoses can control the fire.

Important: Caution should be used, since the tire piles will be unstable.

As soon as the smoke clears to the extent that the building can be entered, entry should be made using small hose streams that should be directed into the burning tires. Sprinklers should be kept in operation during this period.

Forklifts and other means should be used to remove the tires from the fire area to outside the building. It usually is necessary to keep the sprinklers in operation during this procedure at least until there is no evidence of flame. Patrols should be made of the affected area for at least 24 hours following the fire.

Following fire extinguishment, all fire protection systems should be restored to service as quickly as possible. These systems include but are not limited to the following:

(1) Sprinkler systems
(2) Alarm systems
(3) Pumps
(4) Water supplies

E.2 Use of High-Expansion Foam. If a high-expansion foam system is used in connection with automatic sprinklers, sprinklers can be shut off 1 hour after ignition, and foam can soak the fire for an additional hour before the building is opened and overhaul is begun. Limited tests with high-expansion foam indicate that fire extinguishment is largely complete after a period of soaking in foam. As a precautionary measure, charged hose streams should be available when foam is drained away.

After the initial fill, foam generators should be operated periodically during the soaking period to maintain the foam level. This procedure is necessary since sprinklers and products of combustion will cause partial foam breakdown.

--`,,,-`-`,,`,,`,`,,`---

Copyright National Fire Protection Association
Provided by IHS under license with NFPA
No reproduction or networking permitted without license from IHS
Not for Resale

Annex F Guidelines for Outdoor Storage of Scrap Tires

This annex is not a part of the requirements of this NFPA document but is included for informational purposes only.

F.1 Scope. This annex applies to the outdoor storage of scrap tires in whole, baled, or processed form, including incidental usage locations.

F.2 Purpose. This annex has been developed for the purpose of aiding fire officials and authorities having jurisdiction in their effort to both prevent and properly manage fire incidents that occur in whole, baled, or processed scrap tire stockpiles. Each individual property has its own unique conditions of tire handling, exposure, and topography. Thus, in this annex, basic fire protection principles are applied with due consideration of local factors.

Rubber has a heat combustion of about 34.7 mJ/kg (15,000 Btu/lb), or roughly twice that of ordinary combustibles (e.g., paper and wood). Once ignited, fire development is rapid, and high temperatures can be expected due to the large exposed surface area of whole tires. In the case of baled or processed-tire fires, high temperatures can also be expected, although the fire behavior differs. Burning is likely to persist for extended periods. In all cases, there is a high probability of rekindling in the tire pile, even if the fire is controlled.

F.3 Definitions.

F.3.1 Burn-It. A fire-fighting strategy that allows for the free-burn of a tire fire.

F.3.2 Bury-It. A fire-fighting strategy in which a tire pile is buried with soil, sand, gravel, cement dust, or other cover material.

F.3.3 Concrete. A composite material that consists essentially of a binding medium within which particles or fragments of aggregate are embedded in hydraulic cement concrete. The binder is formed from a mixture of hydraulic cement and water.

F.3.4 Forecasting. The ability to predict the fire progression location prior to the completion of the inventory fire break using heavy equipment.

F.3.5 Scrap Tire. A tire that can no longer be used for its original purpose due to wear or damage.

F.3.6 Shredded Tire. A scrap tire reduced in size by a mechanical-processing device, commonly referred to as a shredder.

F.3.7 Tactics. The method of securing the objectives laid out in the strategy through the use of personnel and equipment to achieve optimum results.

F.3.8 Tire Chip. A classified scrap tire particle that has a basic geometrical shape, which is generally 5.1 cm (2 in.) or smaller and has most of the wire removed.

F.4 Fire Experience. Fire experience in outdoor storage of scrap tires reveals a number of concerns, including the following:

(1) Lack of fire codes for scrap tire storage
(2) Generation of large amounts of black smoke
(3) Storage is often too close to buildings on the same or adjacent premises, causing fires in the exposed buildings
(4) Generation of oil during a fire where oil contributes to fire or where runoff contaminates the surrounding area
(5) Delays in reporting fires
(6) Lack of fire-fighting capabilities

Fire hazards inherent in scrap rubber tire storage are best controlled by an aggressive fire prevention program that includes a pre-incident plan.

F.5 General. The fire hazard potential inherent in scrap rubber tire storage operations can best be controlled by an aggressive fire prevention program. The method of storage should be solid piles in an orderly manner and should include the following:

(1) Driveways to separate piles and to provide access for effective fire-fighting operations should be a minimum of 18 m (60 ft) in accordance with Table F.10(a) and Table F.10(b).
(2) Separation of yard storage from buildings, vehicles, flammable materials, and other exposures should be a minimum of 60 m (200 ft).
(3) The area within 60 m (200 ft) of a pile should be totally void of trees, plants, or vegetation.
(4) Topography is a factor in determining the manner of tire fire tactics and environmental mediation.
(5) Tires should not be stored on wetlands, flood plains, ravines, canyons, or steeply graded surfaces. Scrap tire storage preferably should be on a level area. The preferred surface for the storage area is concrete or hard packed clay, not asphalt or grass.
(6) Smoking should be prohibited within the tire storage area. Other types of potential ignition sources such as cutting and welding, heating devices, and open fires should be prohibited. Suitable safeguards should be provided to minimize the hazard of sparks from such equipment as refuse burners, boiler stacks, and vehicle exhaust.
(7) Piles should not be permitted beneath power lines or structures.
(8) Lightning protection systems that conform to local and state codes should be located at the facility but away from the tire piles.
(9) Piles should be at least 15 m (50 ft) from the fences. Lanes should be kept clear of debris or vegetation.

F.6 Fire Department Access to Site. Each tire storage yard should be provided with fire access routes as follows:

(1) Each tire storage yard or pile should be provided with emergency vehicle access routes, such that no portion of the pile is more than 45 m (150 ft) from an access road or fire break.
(2) All roads and accesses should be designed to support the loads imposed by fire-fighting equipment.
(3) All bridges and structures, including drainage structures on access roads, should be capable of carrying a minimum design load of HS-20 in accordance with AASHTO *Standard Specifications for Highway Bridges*. The design and as-built plans for all bridges should be certified by a licensed structural engineer. Routes should be surfaced with material designed to allow accessibility under all climatic conditions.
(4) All emergency vehicle accesses should have an unobstructed vertical clearance of not less than 4.1 m (13½ ft), or as is needed to allow for the passage of large fire-fighting equipment, with a minimum outside turning radius of 13.7 m (45 ft) provided for emergency vehicle access.
(5) All dead-end accesses in excess of 45 m (150 ft) should be provided with a turn-around area.
(6) Accesses should be well maintained and should remain accessible to the fire department at all times. The fire chief can allow the use of alternative materials or processes to provide equivalent fire protection.

Copyright National Fire Protection Association
Provided by IHS under license with NFPA
No reproduction or networking permitted without license from IHS
Not for Resale

F.7 Site Security. Appropriate steps should be taken to limit access to the tire storage area as follows:

(1) The facility should have a chain-link fence at least 10 ft (3 m) high with intruder controls on top (in accordance with local laws).
(2) Gates should protect each access point (a minimum of one on each side). Such gates should be capable of being locked when the facility is not open for business.
(3) All gates should have a 6.1-m (20-ft) open width and should remain unobstructed at all times.
(4) Gates should have rapid entry design that is compatible with local fire department requirements.
(5) Gates should have an optimum activation system or the equivalent and a compatible system approved by the local government. All electrically activated gates should have the capability to default to the unlocked position.
(6) A certified security attendant or site manager should be on site at all times when the facility is open.
(7) Clearly visible signs that indicate business hours and regulations should be posted near the facility entrance.

F.8 Pre-Incident Planning. Pre-incident plans are developed by fire departments to identify special features and hazards at a particular site or property and to specify the department operational plan. Pre-incident plans are specific to a location. Analytical forecasting of the types of emergencies that can be encountered complement the readiness efforts that are generally employed to manage emergency incidents.

It is strongly recommended that the fire department adopt a model incident management system that is published, taught to all members, and regularly utilized. Neighboring (mutual aid) departments and outside agencies with whom the department interacts should be familiar with the department's model incident management system. Operational drills at the scrap tire facility that involve mutual aid companies and related agencies are useful in evaluating shortfalls in the department's response capability and fireground effectiveness.

A thorough survey of the area under the jurisdiction of the fire department should be undertaken to detect the existence of scrap tire piles. In many areas, piles are remotely and illegally dumped. Once the area has been surveyed and the existence of scrap tire piles has been identified, the magnitude of the problem should be assessed, and an appropriate fire prevention methodology should be developed.

Topographical maps and detailed area plot plans should be compiled, noting all features of the terrain and property, hydrants and water supply sources, accesses, interior lanes or passages, and fuel load configuration. Ingress and egress plans should be developed for apparatus and equipment. The development of additional access points, pre-incident or post-incident, should be analyzed and planned, and the means of maintaining or expanding accesses should be provided. Lists of emergency incident contact personnel (names, addresses, and telephone/pager numbers), appropriate agencies, contractors, mutual aid agreements, and so forth, should be obtained. Such lists should be updated on a semiannual basis. A water supply use plan with the estimated gallons per minute (liters per minute) required should be developed.

F.9 Water Supplies. A public or private fire main and hydrant system should be provided. A water system should be provided to supply a minimum of 4000 L/min (1000 gpm) for less than 20,000 units storage [1416 m^3 (50,000 ft^3)], or 8000 L/min (1000 gpm) for 20,000 units storage or more for a duration of 6 hours. If there is access to a lake, stream, pond, or other body of water in the vicinity of the storage area, a fire department suction connection should be provided.

F.10 Pile Geometry and Spacing. Maximum pile height should be 6 m (20 ft), maximum pile width should be 15 m (50 ft), and maximum length should be 75 m (250 ft) without a separation in accordance with Table F.10(a) and Table F.10(b). *(See Figure F.10.)*

The width limitation of 15 m (50 ft) means that, as the exposed face exceeds 30 m (100 ft), the pile takes on the appearance of a wind row, and there is little likelihood that the entire face would be burning all at once. Thus, in Table F.10(a), the minimum exposure separation distances are held constant for exposed face dimensions greater than 30 m (100 ft).

For 500 tires or less the minimum separation distance between scrap rubber tires and structures should be 7.6 m (25 ft) or as reduced by NFPA 80A, *Recommended Practice for Protection of Buildings from Exterior Fire Exposures*.

In order for storage piles of more than 500 tires to be considered isolated piles, the minimum separation distance between piles should be in accordance with Table F.10(a) and Table F.10(b).

The width of the exposing fire should be assumed to be the combined width of piles facing the exposed building, disregarding the nominal separation between piles provided by narrow access aisles and roadways.

Because of the extensive fire expected in scrap tire storage, some form of exposure protection for adjoining properties should be considered. If the clear space as recommended in Table F.10(a) and Table F.10(b) cannot be provided, a dirt berm that is one and one-half times the height of the tire storage should be provided, or other protection that meets the requirements of the authority having jurisdiction should be provided. The storage of baled tires should be vertical rather than horizontal. Under fire conditions, the bands release, allowing for sudden, drastic movement of burning tires.

F.11 Outdoor Tire Pile Fire-Fighting Tactics and Strategy. The guidelines contained in this annex are based on the collective experience of fire service professionals who have managed major scrap tire fires. They are presented as an adjunct to the strategic and tactical practices of an incident command system. Conventional fire suppression tactics are ineffective for scrap tire fires. Fire-fighting tactics and strategies for the suppression of fires in whole tires differ from those for processed tires. The unique shape of whole tires allows the storage of enough air to support combustion throughout the pile, and it is difficult to reach all burning surfaces. Because of such complications, tire fires can continue for weeks, and even months, despite aggressive fire suppression tactics.

The foundation of fire suppression should be based on the data collected before a fire occurs. By establishing a pre-incident plan that uses a model incident command system, decisions regarding size-up, tactics, strategies, and overhaul can be resolved quickly. Familiarity with plans that have been successful in fighting tire fires throughout the country also aids in the decision-making process. Such decisions should be based on an understanding of the dynamics and behavior of a tire fire.

The environmental consequences of all suppression techniques should be evaluated carefully. Communication between the incident commander and the on-scene environmental specialist is critical. The following provide tactics and strategies for fighting whole-tire and processed-tire fires.

--`,,`-`-`,,`,,`,`,,`---

Copyright National Fire Protection Association
Provided by IHS under license with NFPA
No reproduction or networking permitted without license from IHS
Not for Resale

Table F.10(a) Representative Minimum Exposure Separation Distances

Exposed Face Dimension (m)	Tire Storage Pile Height (m)						
	2.4	3	3.7	4.3	4.9	5.5	6.1
7.6	17.1	18.9	20.4	22.3	23.5	25.0	25.9
15.2	22.9	25.6	28.3	30.5	32.6	34.4	36.0
30.5	30.5	35.4	39.0	41.8	44.5	47.2	50.0
45.7	30.5	35.4	39.0	41.8	44.5	47.2	50.0
61.0	30.5	35.4	39.0	41.8	44.5	47.2	50.0
76.2	30.5	35.4	39.0	41.8	44.5	47.2	50.0

Table F.10(b) Representative Minimum Exposure Separation Distances

Exposed Face Dimension (ft)	Tire Storage Pile Height (ft)						
	8	10	12	14	16	18	20
25	56	62	67	73	77	82	85
50	75	84	93	100	107	113	118
100	100	116	128	137	146	155	164
150	100	116	128	137	146	155	164
200	100	116	128	137	146	155	164
250	100	116	128	137	146	155	164

Source: Separation distances are based on the "Fire Safety Assessment of the Scrap Tire Storage Methods," by Robert Brady Williamson, Ph.D. and Robert Allen Schroeder, M.S.

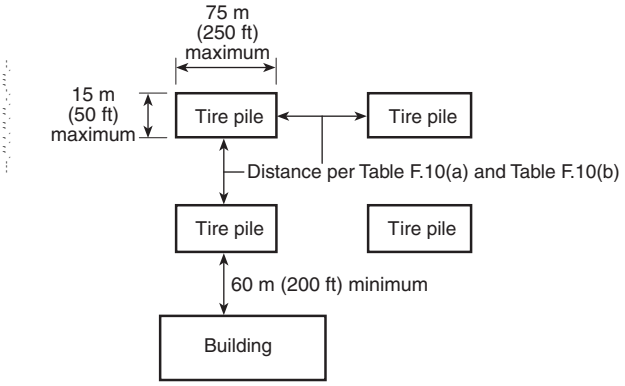

FIGURE F.10 Pile Geometry and Spacing.

(1) *Tactics/Strategies for Whole-Tire Fires.* Important tactical considerations include protecting exposures, separating burning tires from the rest of the inventory, and forecasting. Forecasting for an effective location for separation should include arrival time of equipment and time necessary to develop the needed firebreak. Heavy equipment can be used to accomplish these tasks.

Protection of exposures is an important tactical decision. The initial approach to a tire fire should be to isolate the tire inventory from the fire. Creating firebreaks in a large pile of scrap tire is a time-consuming process. However, it can be accomplished with heavy machinery and front-end loaders. Bulldozers, front-end loaders, and similar equipment can be used to move tires that are not yet involved in the fire to create breaks in the tire pile or to cover burning tires with soil. Equipment breakdowns — scrap tires caught between the wheels, tracks, and undercarriage of heavy equipment — have been reported. Firelines should be deployed to provide protection to operators and equipment alike.

Recognized strategy options are as follows:

(a) *Let-It-Burn (Burn-It).* Allowing a tire pile to burn has its merits. Factors that influence this decision include, but are not limited to, level of fire involvement, resources available, location of the fire, and environmental and economic impacts. Soil and water pollution, as well as clean-up costs, can be drastically reduced when many of the products of combustion are consumed. A precedent for the let-it-burn strategy appears in fire responses to chemical fires. The fire service is responsible for managing and controlling the burn process. Protecting exposures and separating tires from the burn area is a tactical priority.

(b) *Bury-It.* The decision to bury a tire pile also has merits. Materials as diverse as the soil that is on site, cement kiln dust, sand, gravel, and even crushed coral have been employed to cover the burning material. The bury-it strategy can be employed in areas that have a minimal water supply or in areas that are densely populated. The decision to bury a tire fire should take into consideration reduction of the toxic smoke for the sake of public health. Geological considerations play an important role in the bury-it strategy. While the tire fire is entombed, tires can pyrolize, and oil can be generated and released into the soil or underground water sources.

Copyright National Fire Protection Association
Provided by IHS under license with NFPA
No reproduction or networking permitted without license from IHS
Not for Resale

(c) *Drown-It.* The drown-it strategy is best employed with forethought and careful preplanning. Familiarity with the topography, available water supply, and exposure hazards to aboveground water sources will be critical. Planning for the control and containment will facilitate this tactic. The drown-it strategy also has some drawbacks. Cooling the fire will increase the air emissions as the combustion process is slowed down. An inordinate amount of water runoff combined with pyrolitic oil can result from the drown-it tactic.

(2) *Tactics/Strategies for Processed-Tire Fires.* Important tactical considerations include protecting exposures, separating burning tires from the rest of the inventory, and forecasting. Heavy equipment can be used to accomplish these tasks.

To effectively combat a processed tire fire, a fogging of water or other fire retardant should be applied. Cooling the plane of fire should put the fire out. Using a mist also reduces the amount of water used and the subsequent runoff that can be generated. Under no circumstances should a processed tire pile be broken open or doused with streams of high-pressure water that are directed into the piles. Water actually increases the severity and duration of the fire by introducing oxygen into the pile and by breaking up the pile, causing a burst of flames that emits incompletely burned hydrocarbons and other contaminants to the atmosphere.

Once the surface fire is put out, the cooled chips should be removed, allowing water or fire retardant to reach under layers that are hot and still burning. This process should be repeated until the chips are no longer smoldering or hot.

(3) *Ancillary Issues.* Ancillary issues include fire dynamics, stages of combustion, size-up, and environmental concerns. Refer to *Guidelines for the Prevention and Management of Scrap Tire Fires.*

Annex G Informational References

G.1 Referenced Publications. The following documents or portions thereof are referenced within this standard for informational purposes only and are thus not part of the requirements of this document unless also listed in Chapter 2.

G.1.1 NFPA Publications. National Fire Protection Association, 1 Batterymarch Park, P.O. Box 9101, Quincy, MA 02269-9101.

NFPA 10, *Standard for Portable Fire Extinguishers*, 2002 edition.

NFPA 13, *Standard for the Installation of Sprinkler Systems*, 2002 edition.

NFPA 13E, *Recommended Practice for Fire Department Operations in Properties Protected by Sprinkler and Standpipe Systems*, 2000 edition.

NFPA 14, *Standard for the Installation of Standpipe and Hose Systems*, 2003 edition.

NFPA 18, *Standard on Wetting Agents*, 1995 edition.

NFPA 24, *Standard for the Installation of Private Fire Service Mains and Their Appurtenances*, 2002 edition.

NFPA 25, *Standard for the Inspection, Testing, and Maintenance of Water-Based Fire Protection Systems*, 2002 edition.

NFPA 30, *Flammable and Combustible Liquids Code*, 2000 edition.

NFPA 30A, *Code for Motor Fuel Dispensing Facilities and Repair Garages*, 2000 edition.

NFPA 51, *Standard for the Design and Installation of Oxygen–Fuel Gas Systems for Welding, Cutting, and Allied Processes*, 2002 edition.

NFPA 51B, *Standard for Fire Prevention During Welding, Cutting, and Other Hot Work*, 1999 edition.

NFPA 58, *Liquefied Petroleum Gas Code*, 2001 edition.

NFPA 70, *National Electrical Code®*, 2002 edition.

NFPA 72®, *National Fire Alarm Code®*, 2002 edition.

NFPA 80, *Standard for Fire Doors and Fire Windows*, 2003 edition.

NFPA 80A, *Recommended Practice for Protection of Buildings from Exterior Fire Exposures*, 2001 edition.

NFPA 82, *Standard on Incinerators and Waste and Linen Handling Systems and Equipment*, 1999 edition.

NFPA *101®*, *Life Safety Code®*, 2003 edition.

NFPA 204, *Standard for Smoke and Heat Venting*, 2002 edition.

NFPA 220, *Standard on Types of Building Construction*, 1999 edition.

NFPA 251, *Standard Methods of Tests of Fire Endurance of Building Construction and Materials*, 1999 edition.

NFPA 307, *Standard for the Construction and Fire Protection of Marine Terminals, Piers, and Wharves*, 2000 edition.

NFPA 505, *Fire Safety Standard for Powered Industrial Trucks Including Type Designations, Areas of Use, Conversions, Maintenance, and Operation*, 2002 edition.

NFPA 600, *Standard on Industrial Fire Brigades*, 2000 edition.

NFPA 601, *Standard for Security Services in Fire Loss Prevention*, 2000 edition.

NFPA 1620, *Recommended Practice for Pre-Incident Planning*, 1998 edition.

G.1.2 Other Publications.

G.1.2.1 AASHTO Publication. American Association of States Highway Transportation Officials, 444 North Capital Street, NW, Suite 249, Washington, DC 20001.

Standard Specifications for Highway Bridges, 1996.

G.1.2.2 ASTM Publications. American Society for Testing and Materials, 100 Barr Harbor Drive, West Conshohocken, PA 19428-2959.

ASTM E 119, *Standard Methods of Fire Tests of Building Construction and Materials*, 1998.

ASTM SI 10, *Standard for Use of the International System of Units (SI): the Modern Metric System*, 1997.

G.1.2.3 UL Publication. Underwriters Laboratories Inc., 333 Pfingsten Road, Northbrook, IL 60062.

UL 263, *Standard for Safety Fire Tests of Fire Resistance of Building Construction and Materials*, 1997.

G.1.3 Bibliography.

G.1.3.1 *Guidelines for the Prevention and Management of Scrap Tire Fires*, International Association of Fire Chiefs, 4025 Fair Ridge Dr. — Suite 300, Fairfax, VA 22033-2968.

G.2 Informational References. The following documents or portions thereof are listed here as informational resources only. They are not a part of the requirements of this document.

NFPA 664, *Standard for the Prevention of Fires and Explosions in Wood Processing and Woodworking Facilities*, 2002 edition.

G.3 References for Extracts. The following documents are listed here to provide reference information, including title and edition, for extracts given throughout this standard as indicated by a reference in brackets [ ] following a section or paragraph. These documents are not a part of the requirements of this document unless also listed in Chapter 2 for other reasons.

NFPA 13, *Standard for the Installation of Sprinkler Systems*, 2002 edition.

Copyright National Fire Protection Association
Provided by IHS under license with NFPA
No reproduction or networking permitted without license from IHS
Not for Resale

Index

© 2003 National Fire Protection Association. All Rights Reserved.

The copyright in this index is separate and distinct from the copyright in the document that it indexes. The licensing provisions set forth for the document are not applicable to this index. This index may not be reproduced in whole or in part by any means without the express written permission of NFPA.

-A-

Access, fire-fighting 5.1.2, 5.2.2.7, 5.2.3.2, 5.3.4.1, B.7.2.2
- Baled cotton storage facilities D.4.6.1, D.5.3.2
- Forest products storage
  - Chip or hogged material piles ..... 11.6.2.1(4), 11.6.3.1, A.11.6.3.1
  - Log yards ..... 11.7.2(3), 11.7.3.2, 11.7.3.3
  - Lumberyards 11.3.3.6
  - Wood processing facilities 11.4.3.2
- Scrap tires outdoor storage facilities ..... F.5(1), F.6

Aisle widths 5.2.3
- Rack storage 7.3.3, A.7.3.3
  - Baled cotton storage facilities D.3.3
  - Definition ..... 3.3.1, A.3.3.1, Fig. A.3.3.1
  - Palletized, solid pile, bin box, and on-shelf storage A.6.1
  - Tire storage 8.3.1.4
- Wall aisles 5.2.3.1

Alarm service 5.3.5
- Baled cotton storage facilities D.4.5
- Tire storage buildings E.1.4

Alleyways
- Definition 3.3.2
- Tie yards 11.5.3.1, A.11.5.3.1

Approved (definition) 3.2.1, A.3.2.1

Authority having jurisdiction (definition) 3.2.2, A.3.2.2

Available height for storage (definition) 3.3.3, A.3.3.3

-B-

Baled cotton ..... Annex D
- Administration D.6.1
- Causes of fires in D.1.3.2, D.7.2
- Definition 3.3.4
- Fire-fighting information D.7
- Fire-packed baled cotton ..... D.1.3.2(1), D.5.4, D.7.2, D.7.10
  - Definition 3.3.4.1
- Fire stages
  - Active fire D.7.4, D.7.6
  - Incipient fire D.7.3
- General information D.1.3
- Maintenance and operations D.6
- Naked cotton bale D.7.1
  - Definition 3.3.4.2
- Storage arrangements D.3, D.5.3
- Storage buildings D.2, D.6
  - Construction D.2
  - Fire protection D.4, D.6.7
  - Service and equipment D.6.3
- Typical bale types and approximate sizes ..... Table A.3.3.4

Baled cotton yard D.5
- Definition 3.3.44.1

Banded storage (definition) 3.3.38.1

Banded tire storage ..... *see* Tires

Barricades 8.3.2.2

Batteries, charging equipment for D.6.2.1.3

Bin box storage ..... Chap. 6
- Definition 3.3.38.3

Blocks D.5.3.4, D.5.3.5
- Definition 3.3.5
- Storage Blocks
  - In buildings D.3.2
  - Definition 3.3.38.4
  - In yards D.5.3.4, D.5.3.5

Boilers 11.2.2.12, D.6.3.3.1

Breathing apparatus E.1

Building construction 5.1, A.5.1.1, A.5.1.3
- Baled cotton storage D.2
- Construction type 5.1.1, A.5.1.1
- Rack storage 7.2
- Roll paper storage 9.2, A.9.2
- Tire storage facilities 8.2, A.8.2.3

Buildings ..... *see also* Clear spaces; Separation distances
- Administration D.6.1
- Baled cotton storage ..... *see* Baled cotton
- Lumberyards
  - Separation distances ..... 11.2.3.1, 11.3.2.1(4), 11.3.4.1, 11.6.4.2, A.11.2.3.1, A.11.6.4.2
- Service equipment 5.4.2, D.6.3

Bulkhead (definition) 3.3.6

Burn-It ..... F.11(1)(a)
- Definition 3.3.7, F.3

Bury-It ..... F.11(1)(b)
- Definition 3.3.8, F.3

-C-

Cartoned storage (definition) 3.3.38.5

Chips
- Tire ..... F.11(2)
  - Definition 3.3.42, F.3.8
- Wood ..... *see* Wood chips

Classification of commodities
- Class I 4.1.5.1
- Class II 4.1.5.2
- Class III 4.1.5.3
- Class IV 4.1.5.4
- Mixed commodities 4.1.3
- Plastics, elastomers, and rubber 4.1.6
- Rolled paper storage 4.1.7, A.4.1.7

Clearance (definition) 3.3.11

Clear spaces (definition) 3.3.10

Cold cotton (definition) 3.3.12

Cold decks (definition) 3.3.13

Columns
- Paper (definition) 3.3.14
- Steel, protection of 7.2.2, 8.2.1, A.5.1.1

Commodities
- Changes in 4.2
- Clearance 5.2.2, A.5.2.2.2
- Definition 3.3.15

Compartmented (definition) 3.3.16, A.3.3.16

Concrete (definition) F.3

Construction ..... *see* Building construction

Container (definition) 3.3.17, A.3.3.17

Conventional pallets (definition) 3.3.18, A.3.3.18

Cordwood (definition) 3.3.19

Core (definition) 3.3.20

Cotton
- Baled ..... *see* Baled cotton
- Cold (definition) 3.3.12
- Reconditioning D.6.3.3.2

Cutting ..... *see* Welding and cutting

--`,,,-`-`,,`,,`,`,,`---

Copyright National Fire Protection Association
Provided by IHS under license with NFPA
No reproduction or networking permitted without license from IHS

Not for Resale

-D-

Definitions ..... Chap. 3
Designated yard (definition) 3.3.44.2
Detectors/detection systems
High-expansion foam systems 5.3.2.4, 5.3.2.5, 7.3.4.1.3
Doors
Clearances from 5.2.2.3, D.3.6.3, D.3.6.4
Fire ..... *see* Fire doors
Draft curtains 5.1.3.2, A.5.1.3, D.2.2
Driveways
Definition 3.3.21
Log yards ..... 11.7.2(3), 11.7.3.3
Lumberyards ..... 11.4.2(3)
Scrap tires, outdoor storage of ..... F.5(1)
Tie yards ..... 11.5.2(3)
Wood chip or hogged material piles ..... 11.6.2.1(4), 11.6.3.2(B)
Drown-It ..... F.11(1)(c)
Dynamite, use in log yards 11.7.3.5

-E-

Early suppression fast response (ESFR) sprinklers ... 5.1.3.3, A.5.1.3
Elastomers, classification of 4.1.6
Electrical equipment and installations ..... 5.4.2; *see also* Lights and light fixtures
Baled cotton storage facilities D.3.6.1, D.3.6.2, D.6.3.1
Forest products storage 11.2.2.8, 11.6.3.6, 11.6.3.8, 11.6.3.9
Emergency communications
Cotton storage facilities D.5.6.5
Forest products storage ..... 11.2.4, 11.3.2.1(2), 11.4.2(2), 11.5.2(2), 11.6.2.1(3), 11.7.2(2)
Emergency personnel, training of 5.3.4.2, E.1
Emergency planning ..... *see* Pre-incident planning
Encapsulated (definition) 3.3.22, A.3.3.22
Equivalency to standard 1.4
Exits, tire storage facilities
Path of travel, clearance around 8.3.2.2
Travel distance to 8.2.3, A.8.2.3
Exposure protection, forest products storage 11.2.3, A.11.2.3.1
Retail and wholesale lumber yards 11.3.4, A.11.3.4.2
Wood chip or hogged material piles 11.6.4, A.11.6.4
Extinguishers, portable fire 5.3.3.1
Baled cotton storage ..... D.4.4.2 to D.4.4.4, D.5.6.2, D.5.6.4, D.6.7.3, D.7.3
Tire fires, inside buildings E.1.1
Yard storage B.7.4
Wood chip or hogged material piles 11.6.3.3, 11.6.3.4, 11.6.3.6, A.11.6.3.4

-F-

Fences, forest products storage 11.2.2.4
Fines (definition) 3.3.23
Fire brigades B.7.1, D.4.6.2, E.1
Fire divisions, baled cotton storage facilities D.2.3
Fire doors
Automatic-closing A.5.1.1
Baled cotton storage facilities D.2.3.4, D.3.6.3, D.6.7.1
Clearance 5.2.2.3
Tires, indoor storage of 8.3.2.2
Fire-fighting access ..... *see* Access, fire-fighting
Fire-fighting tactics and strategy
Baled cotton fires D.7
Scrap tires outdoor storage F.11
Wood chips and hogged material, outside storage of ... A.11.6.2.1
Fire organization ..... 5.3.4; *see also* Access, fire-fighting; Fire-fighting tactics and strategy
Fire-packed baled cotton ..... *see* Baled cotton
Fire prevention
Forest products storage 11.2.2, 11.3.2.1, A.11.2.2, A.11.3.2.1
Scrap tires outdoor storage F.5
Fire pumps E.1.2, E.1.4
Fire walls
Baled cotton storage facilities ..... D.2.3.1 to D.2.3.3, D.6.3.3.1, D.6.3.3.2, D.6.7.1
Tire storage 8.2.2
Fire watch 5.3.4.3, D.4.6.5, D.5.7.3, D.7.8
Flameover D.1.3.1, D.4.2.3, D.7.1
Definition 3.3.24
Flammable and combustible liquids, storage of 5.2.4, 11.2.2.5
Foam, high-expansion ..... *see* High-expansion foam systems
Forecasting (definition) 3.3.25, F.3
Forest products, storage of
Chips and hogged material 11.6
Fire protection 11.2
Logs 11.7
Lumber and wood panels 11.4
Lumberyards, retail or wholesale 11.2, 11.3
Ties, poles, piles, and posts at pressure-treating plants 11.5
Fuel storage, handling, and operations
Baled cotton storage facilities D.6.2.1.1, D.6.2.1.2, D.6.2.1.4, D.6.2.2
Forest products storage ..... 11.2.2.7, 11.2.2.12, A.11.2.2.7(A)

-G-

Gasoline D.6.2.1.1
Grass, clearing of ..... 11.2.3.2, D.5.5.1(8), D.6.8
Group of yards (baled cotton storage) D.5.3.4, D.5.3.5
Definition 3.3.44.3
Guard service B.8, D.5.7.3

-H-

Haulage, interplant (baled cotton storage facilities) D.6.2.3
Heating devices, forest products storage 11.2.2.9, 11.2.2.10
Heat vents 5.1.3.1, A.5.1.3, C.2, D.2.2
Height
Available height for storage (definition) 3.3.3
Ceiling (definition) 3.3.26.1
Roof (definition) 3.3.26.2
High-expansion foam systems ..... 5.3.2, 7.3.4.1, 7.3.5, A.7.3.4.1.1, A.7.3.5.1(1), C.4, E.2
Hogged materials
Definition 3.3.27
Outside storage 11.6
Horizontal channel (definition) 3.3.28
Horizontal paper storage (definition) 3.3.38.12.1
Hoses and hose streams
Baled cotton storage facilities D.3.6.5, D.4.2.2, D.4.4.1, D.4.6.3, D.7.3, D.7.6, D.7.7, D.7.9
Forest products, storage of A.11.3.2.2, A.11.4.3.1, A.11.5.3.2, A.11.6.3.5
Outdoor storage B.7.2
Tire storage, inside buildings E.1.1, E.1.2, E.1.4, E.2
Hydrants 5.3.3.2, B.7.2
Baled cotton storage facilities ..... D.4.3, D.4.4.1(1), D.5.2, D.5.6.1, D.7.7(1)
Forest products, storage of A.11.3.2.2, A.11.4.3.1, A.11.5.3.2, A.11.6.3.5
Tires
Indoor storage E.1.2
Scrap, outdoor storage F.9

-I-

Industrial trucks ..... *see* Trucks, industrial
Inspections 5.4.6, A.5.4.6
Baled cotton storage facilities D.4.6.4, D.6.7.4
Forest products storage
Log yards ..... 11.7.2(5)
Lumberyards ..... 11.3.2.1(5), 11.4.2(5)
Tie yards ..... 11.5.2(5)
Wood chip or hogged material piles ..... 11.6.2.1(6)
Internal combustion equipment D.5.7.2

Copyright National Fire Protection Association
Provided by IHS under license with NFPA
No reproduction or networking permitted without license from IHS
Not for Resale

Internal fires, wood chip piles 11.6.2, 11.6.3, A.11.6.2, A.11.6.3

-L-

Labeled (definition) 3.2.3
Laced storage (tires) ..... Fig. A.8.1(g)
Definition 3.3.38.6
Lightning ..... D.7.2, F.5(8)
Lights and light fixtures
Clearances from 5.2.2.5, D.3.6.1
Guards or shades for A.5.2.2.5
Metal halide lighting 5.4.8
Portable D.6.3.1.2
Listed (definition) 3.2.4, A.3.2.4
Locomotives (forest products storage) 11.2.2.11
Log (definition) 3.3.29
Log piles ..... *see* Ranked log piles
Logs, outdoor storage of 11.7
LP-Gas 11.2.2.5, D.6.2.1.2
Lumber
Definition 3.3.30
Retail and wholesale yards 11.3

-M-

Management, responsibility of (outdoor storage) B.2
Manual fire protection 5.3.3, D.4.4
Measurement, units of 1.5, A.1.5
Mechanical handling equipment 5.4.1, C.3, D.6.2, D.7.2
Miscellaneous storage (definition) 3.3.38.7
Miscellaneous tire storage (definition) 3.3.38.8
Mixed commodities
Protection requirements 4.1.3
Tire storage facilities 8.3.2.3

-N-

Naked bales ..... *see* Baled cotton
Noncombustible (definition) 3.3.31
Nozzles, monitor B.7.3

-O-

On-side storage (tire) ..... Fig. A.8.1(e)
Definition 3.3.38.9
On-tread storage (tire) ..... Fig. A.8.1(f)
Definition 3.3.38.10
Open flames, equipment using 11.2.2.9, 11.2.2.11, 11.2.2.13, D.6.3.2

-P-

Packaging
Changes in 4.2
Definition 3.3.32
Palletized storage ..... 4.1.4, Chap. 6
Definition 3.3.38.11
Tires ..... Fig. A.8.1(e), Fig. A.8.1(b)
Pallets
Conventional ..... *see* Conventional pallets
Idle, storage of ..... Chap. 12
Inside building 12.2, A.12.1
Outside of building, clearance for ..... Table 12.3(a)
Plastic ..... 4.1.4.2 to 4.1.4.7
Wooden or metal 4.1.4.1
Paper
Definition 3.3.33
Roll ..... 5.2.3.1, Chap. 9
Tissue C.5
Piles (storage configuration) 5.2.1, A.5.2.1
Outdoor storage B.4
Log yard storage 11.7, A.11.7
Wood chips or hogged materials 11.6, A.11.6
Tire storage, inside 8.3.1, A.8.3.1.1
Plans, pre-incident ..... *see* Pre-incident planning
Plastic
Classification of plastics 4.1.6
Pallets ..... 4.1.4.2 to 4.1.4.7
Poles, outdoor storage 11.5
Posts, outdoor storage 11.5
Pre-incident planning A.5.4.6.2
Cotton storage facilities D.4.6, D.5.6.6
Scrap tire storage F.8, F.11
Tire fires in sprinklered buildings E.1
Pressure-treating plants, outside storage of ties, poles, and posts at 11.5
Pumps, fire E.1.2, E.1.4
Purpose of standard 1.2
Pyramid storage (definition) 3.3.38.13

-Q-

Quarantine yards D.5.4
Definition 3.3.44.4

-R-

Rack storage ..... Chap. 7
Automatic storage-type ..... Fig. A.7.3.1(2), A.7.3.1(e)
Cantilever racks ..... Fig. A.7.3.1(6), A.7.3.1(l)
Cotton bales D.3.2
Definition 3.3.34, A.3.3.34
Double-row racks ..... A.7.3.1(1), Fig. A.8.1(4), Figs. A.7.3.1(b) to (d)
Definition 3.3.34.1
Drive-in racks ..... Fig. A.7.3.1(f), Fig. A.7.3.1(h)
Flow-through racks ..... Fig. A.7.3.1(g), Fig. A.7.3.1(i)
Loading 7.3.2, A.7.3.2
Movable racks ..... A.7.3.1(4), Fig. A.7.3.1(k)
Definition 3.3.34.2, A.3.3.34.2
Multiple-row racks ..... A.7.3.1(3), Fig. A.7.3.1(f)
Definition 3.3.34.3
Portable racks ..... Fig. A.7.3.1(j), Fig. A.8.1(a) to (c)
Definition 3.3.34.4, A.3.3.34.4
Single row racks (definition) 3.3.34.5
Structure 7.3.1, A.7.3.1
Test data and procedures ..... Annex C
Tires ..... Figs. A.8.1(a) to (g)
Ranked log piles 11.7
Definition 3.3.35
Reconditioning, of cotton D.6.3.3.2
References ..... Chap. 2, Annex G
Refrigeration systems 5.4.7
Refuse burners 11.2.2.11
Removal of storage 5.2.3.2
Retail lumberyards 11.3
Retroactivity of standard 1.3
Roll paper storage ..... 4.1.7, 5.2.3.1, Chap. 9, A.4.1.7
Roofs
Clearances from 5.2.2.2, A.5.2.2.2, D.3.6.5
Height (definition) 3.3.26.2
Steel 7.2.1, A.5.1.1, A.5.2.2.2, C.4.1
Vents 5.1.3.1, A.5.1.3, C.2, D.2.2
Rows
Baled cotton storage facilities ..... D.5.3.3, D.5.3.4 to D.5.3.6
Definition 3.3.36
Rubber
Classification of 4.1.6
Combustion of F.2
Tires ..... *see* Tires

-S-

Salvage
Access for 5.2.3.2
Cotton storage fires D.7.9

--`,,,-`-`,,`,,`,`,,`---

Copyright National Fire Protection Association
Provided by IHS under license with NFPA
No reproduction or networking permitted without license from IHS

Not for Resale

Scope of standard ..... 1.1, A.1.1.4(7)
Scrap tires
Chips ..... F.11(2)
Definition F.3
Clearances E.10
Definition 3.3.41.2, F.3
Outdoor storage of ..... Annex F
Fire department access to site F.6
Fire experience F.4
Fire-fighting tactics and strategy F.11
Fire prevention F.5
Pile geometry and spacing F.10
Pre-incident planning F.8, F.11
Processed tire fires ..... F.11(2)
Site security F.7
Water supplies F.9
Whole-tire fires ..... F.11(1)
Shredded (definition) F.3
Separation distances
Log yards ..... 11.7.2(4)
Lumberyards ..... 11.2.3.1, 11.2.3.2, 11.3.2.1(4), 11.6.4.2, 11.6.4.3, A.11.2.3.1, A.11.6.4.2, A.11.6.4.3
Mixed commodities 4.1.3.4
Scrap tires, yard storage F.5, F.10
Tie yards ..... 11.5.2(4)
Wood processing facilities ..... 11.4.2(4)
Shall (definition) 3.2.5
Shelf storage ..... Chap. 6
Definition 3.3.38.14
Shelving, solid ..... *see* Solid shelving
Shops, cotton storage areas D.6.3.3
Should (definition) 3.2.6
Shredded tires (definition) 3.3.41.3, F.3
Site security, outdoor storage of scrap tires F.7
Site selection, outdoor storage B.3
SI units 1.5.1, A.1.5
Smoke obscuration, tire fires E.1
Smoke vents 5.1.3.1, A.5.1.3, C.2, D.2.2
Smoking, regulation of 5.4.5
Baled cotton storage facilities D.5.7.1, D.6.6, D.7.2
Forest products storage facilities 11.2.2.2
Scrap tires, outdoor storage ..... F.5(6)
Solid pile storage ..... Chap. 6; *see also* Piles (storage configuration)
Of scrap tires F.5
Fire-fighting tactics and strategy F.11
Pile geometry and spacing F.10
Solid shelving ..... A.7.3.1(5)
Definition 3.3.37
Spark arresters ..... 11.2.2.11(A), 11.2.2.12, D.5.7.2, D.6.2.3
Sparks ..... 11.2.2.11 to 11.2.2.13, 11.6.4.1, A.11.6.4.1
Sprinkler systems ..... 4.2, 5.1.3.3, 5.3.1, A.5.1.3, A.5.3.1; *see also* Ceiling sprinklers; Rack sprinklers
Baled cotton storage facilities D.3.1, D.4.1, D.4.6.3, D.7.1
Active stage fires in sprinklered buildings D.7.4
Clearances from D.3.6.4, D.4.1.3
Failure D.7.5
Hose system supplied by ..... D.4.4.1(3), D.4.4.1(4)
Maintenance D.6.7.2
Waterflow alarms D.4.5
Water supply for D.4.2, D.4.6.3
Log yards, lawn-type sprinklers for A.11.7.3.6
Maintenance of 5.4.6.2, A.5.4.6.2, D.6.7.2
Rack storage ..... 7.2.1 to 7.2.3, A.7.3.2, C.4
Roll paper storage 4.1.7
Tire storage buildings ..... Annex E
Stacks, lumber
Crib style ..... Fig. A.11.5.3.1(b)
Fire hazard of ..... 11.4.2(3), 11.5.2(3), A.11.4.2
Fire lanes separating ..... 11.3.2.1(3), 11.4.2(3)
Open ..... Fig. A.11.5.3.1(a)
Retail or wholesale lumberyards ..... 11.3.3, 11.3.4, A.11.3.2.1(1), A.11.3.3.1, A.11.3.3.3, A.11.3.4.2
Tie yards ..... 11.5.3.5, A.11.5.2(1), A.11.5.3.1
Wood processing facilities ..... 11.4.2(3), 11.4.3.4, A.11.4.2(1), A.11.4.3.1
Standard (definition) 3.2.7
Steel
Fire resistance rating, of steel structural components 7.2.3
Roll paper storage buildings 9.2, A.9.2
Roofs ..... *see* Roofs
Storage aids (definition) 3.3.39
Storage arrangement 5.2, A.5.2
Baled cotton storage D.3
Rack storage 7.3, A.7.3
Roll paper 9.3
Tire storage
Indoor storage 8.3, A.8.3.1.1
Scrap tires, outdoor storage F.10
Storage batteries, charging equipment for D.6.2.1.3
Storage methods, changes in 4.2

-T-

Tactics, fire-fighting
Baled cotton fires D.7
Definition 3.3.40, F.3
Scrap tires, outdoor storage F.11
Tiered storage (cotton storage) D.3.1, D.5.3.1
Definition 3.3.38.15
Ties, outdoor storage 11.5
Tires ..... *see also* Scrap Tires
Banded tire storage ..... F.10, Fig. A.8.1(e), Fig. A.8.1(f)
Definition 3.3.38.2
Chips ..... F.11(2)
Definition 3.3.42, F.3
Indoor storage ..... Chap. 8
Arrangement of storage 8.3, A.8.3.1.1
Building arrangement 8.2, A.8.2.3
Fire protection ..... Chap. 8
Fire stages
Active E.1.2
Critical E.1.3
Incipient E.1.1
Overhaul E.1.4
Horizontal channel (definition) 3.3.28
Storage clearances 8.3.2
Laced storage ..... Fig. A.8.1(g)
Definition 3.3.38.6
Miscellaneous storage (definition) 3.3.38.8
On-side storage ..... Fig. A.8.1(e)
Definition 3.3.38.9
On-tread storage ..... Fig. A.8.1(f)
Definition 3.3.38.10
Rubber tire (definition) 3.3.41.1
Scrap ..... *see* Scrap tires
Tissue paper 4.1.7.4, C.5
Tractors D.6.2.3
Training
Facility emergency personnel 5.3.4.2
Fire brigades E.1
Tramp metal, in wood chip or hogged material piles 11.6.3.10, A.11.6.3
Trucks, industrial 5.4.1
Baled cotton storage facilities D.6.2.1, D.6.2.2, D.7.2
Rack storage C.3
Tires, indoor storage E.1.4

-U-

Units of measurement 1.5, A.1.5

-V-

Vehicles
Baled cotton storage facilities, use in D.5.6.4, D.6.2.4

Copyright National Fire Protection Association
Provided by IHS under license with NFPA
No reproduction or networking permitted without license from IHS
Not for Resale

Forest products storage
Fire-fighting use 11.6.3.3, 11.6.3.7
Operations, use in ... 11.2.2.5, 11.2.2.7, 11.2.2.11, A.11.2.2.7(A)
Venting, emergency smoke and heat 5.1.3.1, A.5.1.3
Cotton fires D.2.2, D.7.4
Rack storage fires C.2
Tire fires E.1
Vertical paper storage (definition) 3.3.38.12.2

-W-

Walls, fire .....*see* Fire walls
Waste disposal 5.4.4, D.6.5
Water as extinguishing agent (baled cotton) D.4.4.2.1, D.7.3, D.7.9
Waterflow alarms (baled cotton) D.4.5.1
Water supply
Baled cotton storage facilities D.4.2, D.4.4.1, D.4.6.3
Maintenance of system D.6.7.2
Yard storage D.5.6.1.3, D.5.6.3
Forest products storage
Log yards 11.7.3.4, A.11.7.3.4
Lumberyards 11.3.2.2, 11.4.3.1, A.11.4.3.1
Wood chip or hogged material piles 11.6.3.5, A.11.6.3.5
Maintenance and service 5.4.6.2, A.5.4.6.2, D.6.7.2
Tire storage
Indoor storage E.1.2, E.1.4
Scrap tires, outdoor storage F.9
Weeds, clearing of ..... 11.2.3.2, A.11.2.2, D.5.5.1(8), D.6.8
Welding and cutting 5.4.3
Baled cotton storage facilities D.6.4, D.7.2
Forest products storage 11.2.2.5, 11.2.2.13
Wetting agents D.4.4.2.1, D.4.4.3, D.5.6.2.1, D.7.3, D.7.6, D.7.9
Wholesale lumberyards 11.3
Wood chips
Definition 3.3.9, A.3.3.9
Outside storage 11.6
Wood panels
Definition 3.3.43
Outside storage, at wood processing facilities 11.4, A.11.4
Wrapped paper storage (definition) ..... 3.3.38.12.3, A.3.3.38.12.3, Fig. A.3.3.38.12.3

-Y-

Yard storage (definition) 3.3.38.16

--`,,,,-`-`,,`,,`,`,,`---

Copyright National Fire Protection Association
Provided by IHS under license with NFPA
No reproduction or networking permitted without license from IHS
Not for Resale

Sequence of Events Leading to Publication of an NFPA Committee Document

Call goes out for proposals to amend existing document or for recommendations on new document.

▼

Committee meets to act on proposals, to develop its own proposals, and to prepare its report.

▼

Committee votes on proposals by letter ballot. If two-thirds approve, report goes forward. Lacking two-thirds approval, report returns to committee.

▼

Report — *Report on Proposals* (ROP) — is published for public review and comment.

▼

Committee meets to act on each public comment received.

▼

Committee votes on comments by letter ballot. If two-thirds approve, supplementary report goes forward. Lacking two-thirds approval, supplementary report returns to committee.

▼

Supplementary report — *Report on Comments* (ROC) — is published for public review.

▼

NFPA membership meets (Annual or Fall Meeting) and acts on committee report (ROP or ROC).

▼

Committee votes on any amendments to report approved at NFPA Annual or Fall Meeting.

▼

Appeals to Standards Council on Association action must be filed within 20 days of the NFPA Annual or Fall Meeting.

▼

Standards Council decides, based on all evidence, whether or not to issue standard or to take other action, including upholding any appeals.

Committee Membership Classifications

The following classifications apply to Technical Committee members and represent their principal interest in the activity of the committee.

M *Manufacturer:* A representative of a maker or marketer of a product, assembly, or system, or portion thereof, that is affected by the standard.

U *User:* A representative of an entity that is subject to the provisions of the standard or that voluntarily uses the standard.

I/M *Installer/Maintainer:* A representative of an entity that is in the business of installing or maintaining a product, assembly, or system affected by the standard.

L *Labor:* A labor representative or employee concerned with safety in the workplace.

R/T *Applied Research/Testing Laboratory:* A representative of an independent testing laboratory or independent applied research organization that promulgates and/or enforces standards.

E *Enforcing Authority:* A representative of an agency or an organization that promulgates and/or enforces standards.

I *Insurance:* A representative of an insurance company, broker, agent, bureau, or inspection agency.

C *Consumer:* A person who is, or represents, the ultimate purchaser of a product, system, or service affected by the standard, but who is not included in the *User* classification.

SE *Special Expert:* A person not representing any of the previous classifications, but who has a special expertise in the scope of the standard or portion thereof.

NOTES:

1. "Standard" connotes code, standard, recommended practice, or guide.
2. A representative includes an employee.
3. While these classifications will be used by the Standards Council to achieve a balance for Technical Committees, the Standards Council may determine that new classifications of members or unique interests need representation in order to foster the best possible committee deliberations on any project. In this connection, the Standards Council may make such appointments as it seems appropriate in the public interest, such as the classification of "Utilities" in the National Electrical Code Committee.
4. Representatives of subsidiaries of any group are generally considered to have the same classification as the parent organization.

--`,,`-`-`,,`,,`,`,,`---

Copyright National Fire Protection Association
Provided by IHS under license with NFPA
No reproduction or networking permitted without license from IHS

Not for Resale

NFPA Technical Committee Document Proposal Form

Note: All proposals must be received by 5:00 p.m. EST/EDST on the published proposal closing date.

For further information on the standards-making process, please contact Codes and Standards Administration at 617-984-7249. For technical assistance, please call NFPA at 617-770-3000.

FOR OFFICE USE ONLY
Log #: _____
Date Rec'd: _____

Please indicate in which format you wish to receive your ROP/ROC: ☐ **CD ROM** ☐ **paper** ☐ **download**
(Note: In choosing the download option you intend to view the ROP/ROC from our Website. No copy will be sent to you.)

Date 12/18/02 **Name** John B. Smith **Telephone** 617-555-1212
Company _____
Address 9 Seattle St. **City** Seattle **State** WA **Zip** 02255
Please indicate organization represented (if any) Fire Marshals Assn. of North America

1. **a) NFPA Document Title** National Fire Alarm Code
   b) NFPA No. & Edition NFPA 72, 2002 ed. **c) Section/Paragraph** 4.4.7.1.1

2. **Proposal Recommends:** *(check one)* ☐ **new text** ☐ **revised text** ☒ **deleted text**

3. **Proposal.** *(Include proposed new or revised wording, or identification of wording to be deleted.)* Note: Proposed text should be in legislative format, that is, use underscore to denote wording to be inserted (inserted wording) and strike-through to denote wording to be deleted (~~deleted wording~~). Delete exception.

4. **Statement of Problem and Substantiation for Proposal.** Note: State the problem that will be resolved by your recommendation. Give the specific reason for your proposal including copies of tests, research papers, fire experience, etc. If more than 200 words, it may be abstracted for publication. A properly installed and maintained system should be free of ground faults. The occurrence of one or more ground faults should be required to cause a "trouble" signal because it indicates a condition that could contribute to future malfunction of the system. Ground fault protection has been widely available on these systems for years and its cost is negligible. Requiring it on all systems will promote better installations, maintenance and reliability.

5. ☒ **This Proposal is Original Material.** Note: Original material is considered to be the submitter's own idea based on or as a result of his/her own experience, thought, or research and, to the best of his/her knowledge, is not copied from another source.

   ☐ **This Proposal is Not Original Material; Its Source** ***(if known)*** **is as Follows:** _____

Sample

I hereby grant the NFPA all and full rights in copyright to this proposal, and I understand that I acquire no rights in any publication of NFPA in which this proposal in this or another similar or analogous form is used.

Signature ***(Required)*** John B. Smith

PLEASE USE SEPARATE FORM FOR EACH PROPOSAL • NFPA FAX (617) 770-3500

Mail to: Secretary, Standards Council • NFPA • 1 Batterymarch Park • PO Box 9101 • Quincy, MA 02269-9101

Copyright National Fire Protection Association
Provided by IHS under license with NFPA
No reproduction or networking permitted without license from IHS
Not for Resale

NFPA Technical Committee Document Proposal Form

Note: All proposals must be received by 5:00 p.m. EST/EDST on the published proposal closing date.

For further information on the standards-making process, please contact Codes and Standards Administration at 617-984-7249. For technical assistance, please call NFPA at 617-770-3000.

FOR OFFICE USE ONLY
Log #: _____
Date Rec'd: _____

Please indicate in which format you wish to receive your ROP/ROC: ☐ **CD ROM** ☐ **paper** ☐ **download**
(Note: In choosing the download option you intend to view the ROP/ROC from our Website. No copy will be sent to you.)

Date _____ **Name** _____ **Telephone** _____

Company _____

Address _____ **City** _____ **State** _____ **Zip** _____

Please indicate organization represented (if any) _____

1. **a) NFPA Document Title** _____
   b) NFPA No. & Edition _____ **c) Section/Paragraph** _____

2. **Proposal Recommends:** *(check one)* ☐ **new text** ☐ **revised text** ☐ **deleted text**

3. **Proposal.** *(Include proposed new or revised wording, or identification of wording to be deleted.)* Note: Proposed text should be in legislative format, that is, use underscore to denote wording to be inserted (inserted wording) and strike-through to denote wording to be deleted (~~deleted wording~~). _____

4. **Statement of Problem and Substantiation for Proposal.** Note: State the problem that will be resolved by your recommendation. Give the specific reason for your proposal including copies of tests, research papers, fire experience, etc. If more than 200 words, it may be abstracted for publication. _____

5. ☐ **This Proposal is Original Material.** Note: Original material is considered to be the submitter's own idea based on or as a result of his/her own experience, thought, or research and, to the best of his/her knowledge, is not copied from another source.

   ☐ **This Proposal is Not Original Material; Its Source *(if known)* is as Follows:** _____

I hereby grant the NFPA all and full rights in copyright to this proposal, and I understand that I acquire no rights in any publication of NFPA in which this proposal in this or another similar or analogous form is used.

Signature *(Required)* _____

PLEASE USE SEPARATE FORM FOR EACH PROPOSAL • NFPA FAX (617) 770-3500

Mail to: Secretary, Standards Council • NFPA • 1 Batterymarch Park • PO Box 9101 • Quincy, MA 02269-9101

Copyright National Fire Protection Association
Provided by IHS under license with NFPA
No reproduction or networking permitted without license from IHS
Not for Resale