NFPA 225

Model Manufactured Home Installation Standard

2005 Edition

NFPA, 1 Batterymarch Park, Quincy, MA 02169-7471
An International Codes and Standards Organization

--`,,,`-`-`,,`,,`,`,,`---

Copyright National Fire Protection Association
Provided by IHS under license with NFPA
No reproduction or networking permitted without license from IHS

Not for Resale

IMPORTANT NOTICES AND DISCLAIMERS CONCERNING NFPA DOCUMENTS

NOTICE AND DISCLAIMER OF LIABILITY CONCERNING THE USE OF NFPA DOCUMENTS

NFPA codes, standards, recommended practices, and guides, of which the document contained herein is one, are developed through a consensus standards development process approved by the American National Standards Institute. This process brings together volunteers representing varied viewpoints and interests to achieve consensus on fire and other safety issues. While the NFPA administers the process and establishes rules to promote fairness in the development of consensus, it does not independently test, evaluate, or verify the accuracy of any information or the soundness of any judgments contained in its codes and standards.

The NFPA disclaims liability for any personal injury, property or other damages of any nature whatsoever, whether special, indirect, consequential or compensatory, directly or indirectly resulting from the publication, use of, or reliance on this document. The NFPA also makes no guaranty or warranty as to the accuracy or completeness of any information published herein.

In issuing and making this document available, the NFPA is not undertaking to render professional or other services for or on behalf of any person or entity. Nor is the NFPA undertaking to perform any duty owed by any person or entity to someone else. Anyone using this document should rely on his or her own independent judgment or, as appropriate, seek the advice of a competent professional in determining the exercise of reasonable care in any given circumstances.

The NFPA has no power, nor does it undertake, to police or enforce compliance with the contents of this document. Nor does the NFPA list, certify, test or inspect products, designs, or installations for compliance with this document. Any certification or other statement of compliance with the requirements of this document shall not be attributable to the NFPA and is solely the responsibility of the certifier or maker of the statement.

--`,,`,,`-`-`,,`,,`,`,,`---

Copyright National Fire Protection Association
Provided by IHS under license with NFPA
No reproduction or networking permitted without license from IHS

Not for Resale

ADDITIONAL NOTICES AND DISCLAIMERS

Updating of NFPA Documents

Users of NFPA codes, standards, recommended practices, and guides should be aware that these documents may be superseded at any time by the issuance of new editions or may be amended from time to time through the issuance of Tentative Interim Amendments. An official NFPA document at any point in time consists of the current edition of the document together with any Tentative Interim Amendments and any Errata then in effect. In order to determine whether a given document is the current edition and whether it has been amended through the issuance of Tentative Interim Amendments or corrected through the issuance of Errata, consult appropriate NFPA publications such as the National Fire Codes® Subscription Service, visit the NFPA website at www.nfpa.org, or contact the NFPA at the address listed below.

Interpretations of NFPA Documents

A statement, written or oral, that is not processed in accordance with Section 6 of the Regulations Governing Committee Projects shall not be considered the official position of NFPA or any of its Committees and shall not be considered to be, nor be relied upon as, a Formal Interpretation.

Patents

The NFPA does not take any position with respect to the validity of any patent rights asserted in connection with any items which are mentioned in or are the subject of NFPA codes, standards, recommended practices, and guides, and the NFPA disclaims liability for the infringement of any patent resulting from the use of or reliance on these documents. Users of these documents are expressly advised that determination of the validity of any such patent rights, and the risk of infringement of such rights, is entirely their own responsibility.

NFPA adheres to applicable policies of the American National Standards Institute with respect to patents. For further information contact the NFPA at the address listed below.

Law and Regulations

Users of these documents should consult applicable federal, state, and local laws and regulations. NFPA does not, by the publication of its codes, standards, recommended practices, and guides, intend to urge action that is not in compliance with applicable laws, and these documents may not be construed as doing so.

Copyrights

This document is copyrighted by the NFPA. It is made available for a wide variety of both public and private uses. These include both use, by reference, in laws and regulations, and use in private self-regulation, standardization, and the promotion of safe practices and methods. By making this document available for use and adoption by public authorities and private users, the NFPA does not waive any rights in copyright to this document.

Use of NFPA documents for regulatory purposes should be accomplished through adoption by reference. The term "adoption by reference" means the citing of title, edition, and publishing information only. Any deletions, additions, and changes desired by the adopting authority should be noted separately in the adopting instrument. In order to assist NFPA in following the uses made of its documents, adopting authorities are requested to notify the NFPA (Attention: Secretary, Standards Council) in writing of such use. For technical assistance and questions concerning adoption of NFPA documents, contact NFPA at the address below.

For Further Information

All questions or other communications relating to NFPA codes, standards, recommended practices, and guides and all requests for information on NFPA procedures governing its codes and standards development process, including information on the procedures for requesting Formal Interpretations, for proposing Tentative Interim Amendments, and for proposing revisions to NFPA documents during regular revision cycles, should be sent to NFPA headquarters, addressed to the attention of the Secretary, Standards Council, NFPA, 1 Batterymarch Park, P.O. Box 9101, Quincy, MA 02269-9101.

For more information about NFPA, visit the NFPA website at www.nfpa.org.

Copyright National Fire Protection Association
Provided by IHS under license with NFPA
No reproduction or networking permitted without license from IHS
Not for Resale

Copyright © 2005, National Fire Protection Association, All Rights Reserved

NFPA 225

Model Manufactured Home Installation Standard

2005 Edition

This edition of NFPA 225, *Model Manufactured Home Installation Standard*, was prepared by the Technical Committees on Manufactured Housing, released by the Technical Correlating Committee on Manufactured Housing, and acted on by NFPA at its November Association Technical Meeting held November 13–17, 2004, in Miami Beach, FL. It was issued by the Standards Council on January 14, 2005, with an effective date of February 7, 2005.

This edition of NFPA 225 was approved as an American National Standard on February 7, 2005.

Origin and Development of NFPA 225

The first edition of NFPA 225 was developed as a result of numerous actions that established themselves in the manufactured housing regulatory climate. First, it should be noted that the previous responsibility for management of the ANSI standard for this subject was with the National Conference of States on Building Codes and Standards (NCSBCS). Their document, NCSBCS A 225.1, 1994 edition, *Manufactured Home Installations*, formed the basis for this edition of NFPA 225. In 2000, an agreement in principle was reached between NCSBCS and NFPA that would allow transfer of the ANSI standard to NFPA. It was a logical move since an installation standard would allow the basic criteria of the manufactured housing standard, as contained in NFPA 501, *Standard on Manufactured Housing*, to allow for the completed unit to be efficiently, effectively, safely, and adequately installed.

The second area that highlighted the need for the installation standard was passage of the Manufactured Housing Improvement Act (MHIA) of 2000. Although the MHIA was not considered until 2001, the act established a broad set of criteria to ensure that changes could be effectively promulgated with respect to the design, construction, and installation of the stock of manufactured homes. A key provision of the MHIA was the need to establish an installation standard that could be utilized by the U.S. Department of Housing and Urban Development (HUD), the ultimate overseer of manufactured homes. NFPA 225 thus not only was developed to pick up where that previous NCSBCS document had left off, it became an integral part of providing another option, along with other state-sponsored installation standards, that could potentially be considered by HUD.

The installation criteria in this standard are widely varied and cover a range of subjects. As written, NFPA 225 is intended to be applied to new installations, regardless of whether they are at new or existing manufactured housing sites. These criteria are intended to be adopted and enforced by the authority having jurisdiction when an alternative state standard does not exist.

In addition to covering the basic administrative features and criteria, provisions are included for site preparation work, foundations, and procedures during on-site installation/erection, as well as management of appliances and utility connections. Requirements reflecting current design loads and practices associated with seismic, wind, and flood events have been included. These provisions govern single-section as well as multisection homes and provide requirements for everything from interconnection criteria for multisection homes to anchor provisions to restrict movement from wind loads, seismic events, and flood.

--`,,```-`-`,,`,,`,`,,`---

Copyright National Fire Protection Association
Provided by IHS under license with NFPA
No reproduction or networking permitted without license from IHS

Not for Resale

Technical Correlating Committee on Manufactured Housing (MAN-AAC)

David Hilton Goins, *Chair*
North Carolina Department of Insurance, NC [E]

William C. Farish, Fleetwood Homes, CA [M]
Danny D. Ghorbani, Manufactured Housing Association for Regulatory Reform, DC [M]
Martin C. Gilchrist, Urban Research & Development Corporation, PA [SE]
Christopher P. Jones, Christopher P. Jones & Associates, NC [E]
Rep. FEMA/Federal Insurance & Mitigation Admin.
John V. Loscheider, Loscheider Engineering Company, WA [E]
Rep. Building Seismic Safety Council/Code Resource Support Committee
Mark C. Orellana, Penn Township, Indiana Fire Department, IN [E]
Rep. International Fire Marshals Association
John Pabian, Underwriters Laboratories Inc., IL [RT]
Jake Pauls, Jake Pauls Consulting Services in Building Use & Safety, MD [C]
Rep. American Public Health Association
George N. Porter, Manufactured Housing Resources, DE [IM]
Janet Potter, Manufactured Home Owners Association of America, NC [C]
Michael J. Slifka, PFS Corporation, WI [RT]
Nader Tomasbi, Liberty Homes, Inc., IN [M]
Frank Walter, Manufactured Housing Institute, VA [M]

Alternates

C. Edgar Bryant, Champion Enterprises, Inc., MI [M]
(Alt. to W. C. Farish)
Clarence Cook, Shelby Township, MI [C]
(Alt. to J. Potter)
Margaret R. Figueroa, Underwriters Laboratories Inc., IL [RT]
(Alt. to J. Pabian)
Stanley C. Harbuck, School of Building Inspection, UT [C]
(Alt. to J. Pauls)
David K. Low, Greenhorne & O'Mara, Inc., VA [E]
(Alt. to C. P. Jones)
Mark A. Nunn, Manufactured Housing Institute, VA [M]
(Alt. to F. Walter)

Nonvoting

John Lake, Marion County Fire Rescue, FL [E]
Rep. TC on Fire Safety for Manufactured Housing
Richard A. Mancini, Rhode Island State Building Commission, RI [E]
Rep. TC on Plumbing for Manufactured Housing
Robert A. McCullough, Ocean County Construction Inspection Dept., NJ [E]
Rep. TC on Electrical for Manufactured Housing
Jerome L. McHale, Federation of Manufactured Home Owners of Florida, Inc., FL [C]
Rep. TC on Administration for Manufactured Housing
Raymond F. Tucker, Consulting Professional Engineer/RADCO, CA [RT]
Rep. TC on Structural for Manufactured Housing
Michael L. Zieman, RADCO, CA [RT]
Rep. TC on Mechanical for Manufactured Housing

Milosh T. Puchovsky, NFPA Staff Liaison

This list represents the membership at the time the Committee was balloted on the final text of this edition. Since that time, changes in the membership may have occurred. A key to classifications is found at the back of the document.

NOTE: Membership on a committee shall not in and of itself constitute an endorsement of the Association or any document developed by the committee on which the member serves.

Committee Scope: This Correlating Committee shall have primary responsibility for documents or portions of documents that provide a safe and healthy environment for the occupant of a manufactured home.

Copyright National Fire Protection Association
Provided by IHS under license with NFPA
No reproduction or networking permitted without license from IHS
Not for Resale

Technical Committee on Administration for Manufactured Housing (MAN-ADM)

Jerome L. McHale, *Chair*
Federation of Manufactured Home Owners of Florida, Inc., FL [C]

Danny D. Ghorbani, Manufactured Housing Association for Regulatory Reform, DC [M]
Martin C. Gilchrist, Urban Research & Development Corporation, PA [SE]
David Hilton Goins, North Carolina Department of Insurance, NC [E]
Doug Gorman, Home-Mart, Incorporated, OK [M]
Rep. Manufactured Housing Association of Oklahoma
Jeffrey T. Inks, National Association of Home Builders, DC [U]
Rep. National Association of Home Builders
Christopher P. Jones, Christopher P. Jones & Associates, NC [E]
Rep. FEMA/Federal Insurance & Mitigation Admin.
Jake Pauls, Jake Pauls Consulting Services in Building Use & Safety, MD [C]
Rep. American Public Health Association
Raymond F. Tucker, Consulting Professional Engineer/RADCO, CA [RT]

Alternates

Stanley C. Harbuck, School of Building Inspection, UT [C]
(Alt. to J. Pauls)
David K. Low, Greenhorne & O'Mara, Inc., VA [E]
(Alt. to C. P. Jones)
Frank Walter, Manufactured Housing Institute, VA [M]
(Alt. to D. D. Ghorbani)
Michael L. Zieman, RADCO, CA [RT]
(Alt. to R. F. Tucker)

Milosh T. Puchovsky, NFPA Staff Liaison

This list represents the membership at the time the Committee was balloted on the final text of this edition. Since that time, changes in the membership may have occurred. A key to classifications is found at the back of the document.

NOTE: Membership on a committee shall not in and of itself constitute an endorsement of the Association or any document developed by the committee on which the member serves.

Committee Scope: This Committee shall have primary responsibility for documents or portions of documents on administrative provisions and planning requirements for manufactured homes to assure the adequacy of architectural planning considerations and documentation of compliance for a safe and healthy environment for the occupants of a manufactured home.

Technical Committee on Electrical for Manufactured Housing (MAN-ELE)

Robert A. McCullough, *Chair*
Ocean County Construction Inspection Dept., NJ [E]
Rep. International Association of Electrical Inspectors

Thomas R. Brandt, Fairmont Homes Inc., IN [M]
C. Edgar Bryant, Champion Enterprises, Inc., MI [M]
Thomas L. Harman, University of Houston/Clear Lake, TX [SE]
Daniel J. Kissane, Pass & Seymour/Legrand, NY [M]
Robert L. La Rocca, Underwriters Laboratories Inc., NY [RT]
Kent Pribyl, Nebraska Public Service Commission, NE [E]
Clifford L. Rediger, Independent Electrical Contractors Training Fund, CO [IM]
Rep. Independent Electrical Contractors, Inc.
Frank Whittaker, Jr., City of Roanoke, VA [E]
Michael L. Zieman, RADCO, CA [RT]

Alternates

David R. Keller, Champion Enterprises, Inc., MI [M]
(Alt. to C. E. Bryant)

Jeffrey S. Sargent, NFPA Staff Liaison

This list represents the membership at the time the Committee was balloted on the final text of this edition. Since that time, changes in the membership may have occurred. A key to classifications is found at the back of the document.

NOTE: Membership on a committee shall not in and of itself constitute an endorsement of the Association or any document developed by the committee on which the member serves.

Committee Scope: This Committee shall have primary responsibility for documents or portions of documents on electrical conductors and electrical equipment installed within or on manufactured homes to provide a safe and healthy environment for the occupants of a manufactured home.

Copyright National Fire Protection Association
Provided by IHS under license with NFPA
No reproduction or networking permitted without license from IHS
Not for Resale

Technical Committee on Fire Safety for Manufactured Housing (MAN-FIR)

John Lake, *Chair*
Marion County Fire Rescue, FL [E]

Jim Blair, Foremost Insurance Group, MI [I]
Kenneth E. Gaiser, City of Jackson Fire Department, MI [E]
Rep. International Association of Fire Chiefs
William M. Hug, Cavco Industries, LLC, AZ [M]
M. L. "Larry" Maruskin, U.S. Department of Homeland Security, MD [C]
Richard A. Mendlen, U.S. Department of Housing and Urban Development, DC [E]
Dennis L. Pitts, American Forest & Paper Association, TX [M]
Rep. American Forest & Paper Association
James V. Ryan, Potomac, MD [SE]
Michael J. Slifka, PFS Corporation, WI [RT]
Randy E. Vogt, State of Minnesota, MN [E]
Richard Weinert, State of California, CA [E]
Robert A. Wessel, Gypsum Association, DC [M]
A. Elwood Willey, FIREPRO Incorporated, MA [SE]

Alternates

Dennis Mapalo, State of California, CA [E]
(Alt. to R. Weinert)
Jeffrey B. Stone, American Forest & Paper Association, FL [M]
(Alt. to D. L. Pitts)

Kirsten Paoletti, NFPA Staff Liaison

This list represents the membership at the time the Committee was balloted on the final text of this edition. Since that time, changes in the membership may have occurred. A key to classifications is found at the back of the document.

NOTE: Membership on a committee shall not in and of itself constitute an endorsement of the Association or any document developed by the committee on which the member serves.

Committee Scope: This Committee shall have primary responsibility for documents or portions of documents on fire safety to the occupants of a manufactured home.

Technical Committee on Mechanical for Manufactured Housing (MAN-MEC)

Michael L. Zieman, *Chair*
RADCO, CA [RT]

Devra R. Bachrach, Natural Resources Defense Council (NRDC), CA [C]
Larry Boyce, NORDYNE, MO [M]
John M. Halliwill, International Association of Plumbing & Mechanical Officials, CA [E]
Rep. International Association of Plumbing & Mechanical Officials
Jordan Heiman, Jordan L. Heiman Inc., MO [SE]
Michael Lubliner, Washington State University Energy Program, WA [U]
Rep. Northwest Energy Efficiency Alliance
John Mikel, Skyline Corporation, IN [M]
Ivan T. Smith, Greenstone Industries, Inc., FL [M]
John R. Stevens, U.S. Department of Housing and Urban Development, DC [E]
Frank Walter, Manufactured Housing Institute, VA [M]
Alan Zimmerman, York International UPG/Evcon, KS [M]

Alternates

Denise Beach, National Propane Gas Association, DC [IM]
(Voting Alt. to NPGA Rep.)
Michael T. Kobel, International Association of Plumbing & Mechanical Officials, CA [E]
(Alt. to J. M. Halliwill)
Jeffrey T. Legault, Skyline Corporation, IN [M]
(Alt. to J. Mikel)
Mark A. Nunn, Manufactured Housing Institute, VA [M]
(Alt. to F. Walter)

Milosh T. Puchovsky, NFPA Staff Liaison

This list represents the membership at the time the Committee was balloted on the final text of this edition. Since that time, changes in the membership may have occurred. A key to classifications is found at the back of the document.

NOTE: Membership on a committee shall not in and of itself constitute an endorsement of the Association or any document developed by the committee on which the member serves.

Committee Scope: This Committee shall have primary responsibility for documents or portions of documents on condensation control; air infiltration; thermal insulation; certification for heating and comfort cooling; and heating, cooling, and fuel-burning equipment that is installed within, on, or external to a manufactured home.

--`,,```-`-`,,`,,`,`,,`---

Copyright National Fire Protection Association
Provided by IHS under license with NFPA
No reproduction or networking permitted without license from IHS
Not for Resale

Technical Committee on Plumbing for Manufactured Housing (MAN-PLU)

Richard A. Mancini, *Chair*
Rhode Island State Building Commission, RI [E]

Marguerite E. Carroll, Underwriters Laboratories Inc., CA [RT]
John M. Halliwill, International Association of Plumbing & Mechanical Officials, CA [E]
William C. Masters, Homes of Merit, Inc., FL [M]
James R. Paschal, NSF International, MI [RT]
Kent Pribyl, Nebraska Public Service Commission, NE [E]
David Viola, Plumbing Manufacturers Institute, IL [M]
Rep. Plumbing Manufacturers Institute
Michael L. Zieman, RADCO, CA [RT]

Alternates

Michael T. Kobel, International Association of Plumbing & Mechanical Officials, CA [E]
(Alt. to J. M. Halliwill)

Theodore C. Lemoff, NFPA Staff Liaison

This list represents the membership at the time the Committee was balloted on the final text of this edition. Since that time, changes in the membership may have occurred. A key to classifications is found at the back of the document.

NOTE: Membership on a committee shall not in and of itself constitute an endorsement of the Association or any document developed by the committee on which the member serves.

Committee Scope: This Committee shall have primary responsibility for documents or portions of documents on plumbing systems that provide a safe and healthy environment for the occupants of a manufactured home.

Technical Committee on Structural for Manufactured Housing

Raymond F. Tucker, *Chair*
Consulting Professional Engineer/RADCO, CA [RT]

John G. Bradfield, Composite Panel Association, MD [U]
Bill Broecker, Foremost Corporation of America, MI [I]
C. Edgar Bryant, Champion Enterprises, Inc., MI [M]
William C. Farish, Fleetwood Homes, CA [M]
Evor F. Johns, Progressive Engineering, Inc., IN [SE]
Christopher P. Jones, Christopher P. Jones & Associates, NC [E]
Rep. FEMA/Federal Insurance & Mitigation Admin.
Michael A. Kinard, Kinro Incorporated, TX [M]
John V. Loscheider, Loscheider Engineering Company, WA [E]
Rep. Building Seismic Safety Council/Code Resource Support Committee
Harry W. (Hank) Martin, American Iron and Steel Institute, CA [M]
Rep. American Iron and Steel Institute
Richard A. Mendlen, U.S. Department of Housing and Urban Development, DC [E]
John Pabian, Underwriters Laboratories Inc., IL [RT]
Kanti Patel, Maryland Codes Administration, MD [E]
Jeffrey B. Stone, American Forest & Paper Association, FL [M]
Rep. American Forest & Paper Association
John W. Weldy, NTA Incorporated, IN [RT]

Alternates

Gary L. Heroux, Composite Panel Association (CPA), MD [U]
(Alt. to J. G. Bradfield)
David R. Keller, Champion Enterprises, Inc., MI [M]
(Alt. to C. E. Bryant)
David K. Low, Greenhorne & O'Mara, Inc., VA [E]
(Alt. to C. P. Jones)
Dennis L. Pitts, American Forest & Paper Association, TX [M]
(Alt. to J. B. Stone)
Jason Smart, Institute for Business & Home Safety, FL [I]
(Voting Alt. to IBHS Rep.)
Robert J. Wills, American Iron and Steel Institute, AL [M]
(Alt. to H. W. Martin)
Patrick Zeeveld, Underwriters Laboratories Inc., IL [RT]
(Alt. to J. Pabian)

Bonnie E. Manley, NFPA Staff Liaison

This list represents the membership at the time the Committee was balloted on the final text of this edition. Since that time, changes in the membership may have occurred. A key to classifications is found at the back of the document.

NOTE: Membership on a committee shall not in and of itself constitute an endorsement of the Association or any document developed by the committee on which the member serves.

Committee Scope: This Committee shall have primary responsibility for documents or portions of documents on materials, products, equipment and workmanship and testing needed to ensure that there is a safe and healthy environment for the occupant of a manufactured home. The Committee shall also have the responsibility associated with the general requirements for designing the structure to fully withstand the adverse effects of transportation shock and vibration on a manufactured home.

Copyright National Fire Protection Association
Provided by IHS under license with NFPA
No reproduction or networking permitted without license from IHS
Not for Resale

Contents

Chapter 1 Administration **225–** 8
1.1 Scope **225–** 8
1.2 Purpose. (Reserved) **225–** 8
1.3 Application **225–** 8
1.4 Retroactivity **225–** 8
1.5 Term Use **225–** 8
1.6 Equivalency **225–** 8

Chapter 2 Referenced Publications **225–** 9
2.1 General **225–** 9
2.2 NFPA Publications **225–** 9
2.3 Other Publications **225–** 9

Chapter 3 Definitions **225–** 9
3.1 General **225–** 9
3.2 NFPA Official Definitions **225–** 9
3.3 General Definitions **225–**10

Chapter 4 General **225–**11
4.1 Preinstallation Considerations **225–**11
4.2 Alterations **225–**11
4.3 Data Plate **225–**11
4.4 Installation Considerations **225–**11
4.5 Design and Construction **225–**11

Chapter 5 Site Preparation **225–**16
5.1 Access for Transporter **225–**16
5.2 Encroachments and Setback Distances **225–**16
5.3 Fire Separation Distance **225–**16
5.4 Issuance of Permits **225–**16
5.5 Site Preparation **225–**16
5.6 Investigation and Bearing Capacity of Soil **225–**16
5.7 Drainage **225–**16
5.8 Ground Moisture Control **225–**17

Chapter 6 Foundations **225–**17
6.1 General **225–**17
6.2 Piers **225–**17
6.3 Footings **225–**21
6.4 Permanent Foundations **225–**22
6.5 Special Considerations **225–**22

Chapter 7 Installation Procedures **225–**24
7.1 Before Moving Manufactured Home to Location **225–**24
7.2 Positioning of Home **225–**24
7.3 Interconnection of Multisection Homes ... **225–**24
7.4 Crossover Connections for Multisection Manufactured Homes **225–**24
7.5 Anchoring Instructions **225–**25
7.6 Installation of On-Site Structures **225–**26
7.7 Installation Close-Up/Finishing **225–**27

Chapter 8 Site-Installed Features **225–**27
8.1 Installation of Site-Installed Features **225–**27
8.2 Hinged Roofs and Eaves **225–**27
8.3 Garden and Bay Windows **225–**27
8.4 Awnings and Ramadas **225–**27
8.5 Miscellaneous Lights and Fixtures **225–**27
8.6 Ventilation Options **225–**28
8.7 Optional Panels, Siding, and Molding **225–**28
8.8 Skirting **225–**30
8.9 Telephone and Cable TV **225–**30
8.10 Joints and Seams **225–**30

Chapter 9 Preparation of Appliances **225–**30
9.1 Clothes Dryer Vent **225–**30
9.2 Comfort Cooling Systems **225–**30
9.3 Fireplace and Wood-Stove Chimneys and Air Inlets **225–**31
9.4 Range, Cooktop, and Oven Venting **225–**31
9.5 Flood Hazard Areas **225–**31
9.6 Seismic Design Categories D_0, D_1, D_2, and E **225–**31

Chapter 10 Utility System Connection and Testing **225–**32
10.1 Proper Procedures **225–**32
10.2 Water Supply **225–**32
10.3 Drainage System **225–**33
10.4 Gas Supply **225–**33
10.5 Heating Oil Systems **225–**34
10.6 Electricity **225–**35

Chapter 11 Life Safety Features **225–**35
11.1 Smoke Alarms **225–**35
11.2 Fire Separation Distances **225–**35

Chapter 12 Installation in Flood Hazard Areas **225–**35
12.1 General **225–**35
12.2 Lowest Floor Elevation **225–**35
12.3 Foundations and Anchoring **225–**36
12.4 Installation Procedures **225–**36
12.5 Post-Installation Considerations **225–**36
12.6 Preparation of Appliances **225–**37
12.7 Utility Systems **225–**37

Chapter 13 Seismic Provisions for Prescriptive Design of Support Systems **225–**37
13.1 Scope **225–**37
13.2 Minimum Prescriptive Support System Requirements **225–**37
13.3 Prescriptive Pier Support Systems **225–**37
13.4 Prescriptive Foundation Wall Support Systems **225–**39
13.5 Prescriptive Wood Cripple Wall Support Systems **225–**41

Copyright National Fire Protection Association
Provided by IHS under license with NFPA
No reproduction or networking permitted without license from IHS
Not for Resale

Chapter 14 Seismic Installation and Equipment Bracing Requirements **225**–42
14.1 General **225**–42
14.2 Site-Installed Water Heaters **225**–42
14.3 Site-Installed Equipment **225**–42
14.4 Utility Attachments **225**–42

Annex A Explanatory Material **225**–42

Annex B Final Inspection Checklist **225**–47

Annex C Sample Checklist for AHJ Officials **225**–47

Annex D Sample Schedule for Manufactured Home Installation Permits **225**–51

Annex E Informational References **225**–51

Index **225**–52

Copyright National Fire Protection Association
Provided by IHS under license with NFPA
No reproduction or networking permitted without license from IHS
Not for Resale

NFPA 225

Model Manufactured Home Installation Standard

2005 Edition

IMPORTANT NOTE: This NFPA document is made available for use subject to important notices and legal disclaimers. These notices and disclaimers appear in all publications containing this document and may be found under the heading "Important Notices and Disclaimers Concerning NFPA Documents." They can also be obtained on request from NFPA or viewed at www.nfpa.org/disclaimers.

NOTICE: An asterisk (*) following the number or letter designating a paragraph indicates that explanatory material on the paragraph can be found in Annex A.

A reference in brackets [ ] following a section or paragraph indicates material that has been extracted from another NFPA document. As an aid to the user, the complete title and edition of the source documents for mandatory extracts are given in Chapter 2 and those for nonmandatory extracts are given in Annex E. Editorial changes to extracted material consist of revising references to an appropriate division in this document or the inclusion of the document number with the division number when the reference is to the original document. Requests for interpretations or revisions of extracted text shall be sent to the technical committee responsible for the source document.

Information on referenced publications can be found in Chapter 2 and Annex E.

Chapter 1 Administration

1.1* Scope. This model standard shall cover the installation of manufactured homes wherever sited in the United States and its territories. The manufacturer's installation instructions shall apply under either of the following conditions:

(1) To items not covered by this standard
(2) Where the manufacturer's approved installation instructions provide a specific method of performing a specific operation or assembly

1.2 Purpose. (Reserved)

1.3 Application. The provisions of this standard shall apply to manufactured homes used as dwelling units. This standard makes no provisions for other residential occupancies.

1.3.1 This standard shall not apply to manufactured homes used for other than dwelling purposes.

1.3.2 The provisions of this standard shall not apply to recreational vehicles as defined in NFPA 1192, *Standard on Recreational Vehicles*, or to park trailers as defined in ANSI A119.5, *Recreational Park Trailers*.

1.3.3* The provisions of this standard shall apply to park trailers labeled as manufactured homes.

1.3.4 The manufactured homes covered by this standard shall comply with the U.S. Department of Housing and Urban Development (HUD) federal Manufactured Home Construction and Safety Standards (MHCSS) Program, as set forth in 24 CFR 3280, *Manufactured Home Construction and Safety Standards*, and 24 CFR 3282, *Manufactured Home Procedural and Enforcement Regulations*. Mobile homes built prior to June 15, 1976, are also covered by this standard.

1.3.5 This standard is designed to be adopted by authorities having jurisdiction over, and responsibility for, the safety and health of manufactured home users. It is intended to apply to all home installations, whether at new or existing manufactured home sites.

1.3.6 Flood Hazard Areas. The provisions of this standard shall apply to installations on home sites that are wholly or partly located in flood hazard areas, including installations of new manufactured homes, replacement manufactured homes, substantial improvement of existing manufactured homes, and repair of substantially damaged manufactured homes. Installations in flood hazard areas shall meet the requirements of Chapter 12.

1.3.6.1* Pre-Installation Considerations. Prior to the installation of a manufactured home, it shall be determined whether the home site lies wholly or partly within a special flood hazard area as shown on the authority having jurisdiction's (AHJ's) flood hazard map. If the AHJ has not adopted a flood hazard map, the AHJ shall be consulted to determine installation requirements.

1.4 Retroactivity. The provisions of this standard reflect a consensus of what is necessary to provide an acceptable degree of protection from the hazards addressed in this standard at the time the standard was issued.

1.4.1 Unless otherwise specified, the provisions of this standard shall not apply to facilities, equipment, structures, or installations that existed or were approved for construction or installation prior to the effective date of the standard. Where specified, the provisions of this standard shall be retroactive.

1.4.2 In those cases where the authority having jurisdiction determines that the existing situation presents an unacceptable degree of risk, the authority having jurisdiction shall be permitted to apply retroactively any portions of this standard deemed appropriate.

1.4.3 The retroactive requirements of this standard shall be permitted to be modified if their application clearly would be impractical in the judgment of the authority having jurisdiction, and only where it is clearly evident that a reasonable degree of safety is provided.

1.5 Term Use. The term *manufactured home* where used in this document shall be permitted to be used interchangeably with *home*.

1.6 Equivalency.

1.6.1 General. Nothing in this standard shall be intended to prevent use of systems, fire resistance, effectiveness, durability, and safety over those prescribed by this standard. Technical documentation shall be submitted to the authority having jurisdiction to demonstrate equivalency. The system, method, or device shall be approved for the intended purpose by the AHJ.

1.6.2 Approval of Alternatives. Alternative systems, methods, or devices approved as equivalent by the AHJ shall be recognized as being in compliance with this standard.

1.6.3 Permitted Alternatives. The provisions of this standard shall not be construed to prevent the use of construction systems, materials, or methods of design, or interpolations, calculations, evaluations, or similar evidence based on test data acceptable to the AHJ, as alternatives to the standards and

--`,,```-`-`,,`,,`,`,,`---

Copyright National Fire Protection Association
Provided by IHS under license with NFPA
No reproduction or networking permitted without license from IHS
Not for Resale

provisions set forth in this standard. Such alternatives shall be permitted to be offered for approval, and their consideration shall be as provided in 1.6.2 through 1.6.5.

1.6.4 Standards. Construction systems, materials, or methods of design referred to in this standard shall be considered as standards of quality and strength. New or alternative construction systems, materials, or methods of design shall be at least equal to, and shall meet the intent of, these standards for the corresponding use intended.

1.6.5 Systems, Materials, and Methods. Any person desiring to use construction systems, materials, or methods of design not specifically mentioned in this standard shall file with the authority having jurisdiction a request for permission to use such systems, materials, or methods. Where alternative construction systems or materials are requested, the request shall be submitted with documentation, in writing, that supports claims of the sufficiency of such construction systems or materials. If a test installation is proposed, a description of the location and purpose of the test shall also be submitted.

1.6.6 Approval. The AHJ shall approve alternate construction systems, materials, or methods of design when it is substantiated that the requirements of this standard are at least equaled. If, in the opinion of the AHJ, the requirements of this standard are not equaled by the alternative requested, approval for permanent work shall be refused. Consideration shall be given to test or prototype installations.

1.6.7 Tests.

1.6.7.1 Whenever there is insufficient evidence of compliance with the requirements of this standard, evidence that any material or method of construction does not conform to the requirements of this standard or insufficient evidence to substantiate claims for alternative construction systems, materials, or methods of construction, the AHJ shall be permitted to require tests for proof of compliance to be made by an approved agency at the expense of the owner or owner's agent.

1.6.7.2 Test methods shall be as specified by this standard for the material in question. If there are not appropriate test methods specified in the standard, the AHJ is authorized to accept an applicable test procedure from another source.

1.6.7.3 Copies of the results of all tests shall be retained for not less than 2 years after the acceptance of the building or structure.

1.6.8 Appeal. Any person whose request for use of alternative systems and materials or methods of design has been refused by the authority having jurisdiction shall be permitted to appeal to the board of appeals. [***5000***:1.5.8]

Chapter 2 Referenced Publications

2.1 General. The documents or portions thereof listed in this chapter are referenced within this standard and shall be considered part of the requirements of this document.

2.2 NFPA Publications. National Fire Protection Association, 1 Batterymarch Park, Quincy, MA 02169-7471.

NFPA 13D, *Standard for the Installation of Sprinkler Systems in One- and Two-Family Dwellings and Manufactured Homes,* 2002 edition.

NFPA 70, *National Electrical Code®,* 2005 edition.

NFPA 255, *Standard Method of Test of Surface Burning Characteristics of Building Materials,* 2000 edition.

NFPA 501, *Standard on Manufactured Housing,* 2005 edition.

NFPA 501A, *Standard for Fire Safety Criteria for Manufactured Home Installations, Sites, and Communities,* 2005 edition.

NFPA 1192, *Standard on Recreational Vehicles,* 2005 edition.

NFPA 5000®, Building Construction and Safety Code®, 2003 edition.

2.3 Other Publications.

2.3.1 ANSI Publication. American National Standards Institute, Inc., 25 West 43rd Street, 4th Floor, New York, NY 10036.

ANSI A119.5, *Recreational Park Trailers,* 1998 edition.

2.3.2 ASCE Publications. American Society of Civil Engineers, 1801 Alexander Bell Drive, Reston, VA 20191.

ASCE 7, *Minimum Design Loads for Buildings and Other Structures,* 2002.

SEI/ASCE 24, *Flood Resistant Design and Construction*, 1998.

2.3.3 ASTM Publications. American Society for Testing and Materials, 100 Barr Harbor Drive, West Conshohocken, PA 19428-2959.

ASTM C 90, *Standard Specification for Loadbearing Concrete Masonry Units,* 2002.

ASTM D 3953, *Standard Specification for Strapping, Flat Steel and Seals,* 1997.

ASTM D 4318, *Standard Test Methods for Liquid Limit, Plastic Limit, and Plasticity Index of Soils.*

2.3.4 AWPA Publications. American Wood-Preservers' Association, P.O. Box 5690, Granbury, TX 76049.

AWPA C2, *Standard for the Preservative Treatment of Lumber, Timber, Bridge Ties and Mine Ties, by Pressure Processes,* 2001.

AWPA C9, *Plywood Preservative Treatment by Pressure Processes,* 2002.

2.3.5 U.S. Government Publications. U.S. Government Printing Office, Washington, DC 20402.

Title 24, Code of Federal Regulations, Part 3280, *Manufactured Home Construction and Safety Standards.*

Title 24, Code of Federal Regulations, Part 3282, *Manufactured Home Procedural and Enforcement Regulations.*

Chapter 3 Definitions

3.1 General. The definitions contained in this chapter shall apply to the terms used in this standard. Where terms are not defined in this chapter or within another chapter, they shall be defined using their ordinarily accepted meanings within the context in which they are used. *Merriam-Webster's Collegiate Dictionary,* 11th edition, shall be the source for the ordinarily accepted meaning.

3.2 NFPA Official Definitions.

3.2.1* Approved. Acceptable to the authority having jurisdiction.

3.2.2* Authority Having Jurisdiction (AHJ). An organization, office, or individual responsible for enforcing the requirements of a code or standard, or for approving equipment, materials, an installation, or a procedure.

Copyright National Fire Protection Association
Provided by IHS under license with NFPA
No reproduction or networking permitted without license from IHS
Not for Resale

3.2.3 Labeled. Equipment or materials to which has been attached a label, symbol, or other identifying mark of an organization that is acceptable to the authority having jurisdiction and concerned with product evaluation, that maintains periodic inspection of production of labeled equipment or materials, and by whose labeling the manufacturer indicates compliance with appropriate standards or performance in a specified manner.

3.2.4* Listed. Equipment, materials, or services included in a list published by an organization that is acceptable to the authority having jurisdiction and concerned with evaluation of products or services, that maintains periodic inspection of production of listed equipment or materials or periodic evaluation of services, and whose listing states that either the equipment, material, or service meets appropriate designated standards or has been tested and found suitable for a specified purpose.

3.2.5 Shall. Indicates a mandatory requirement.

3.2.6 Should. Indicates a recommendation or that which is advised but not required.

3.2.7 Standard. A document, the main text of which contains only mandatory provisions using the word "shall" to indicate requirements and which is in a form generally suitable for mandatory reference by another standard or code or for adoption into law. Nonmandatory provisions shall be located in an appendix or annex, footnote, or fine-print note and are not to be considered a part of the requirements of a standard.

3.3 General Definitions.

3.3.1 Alteration. See 3.3.15, Installation Alteration.

3.3.2 Anchor. A device placed at the manufactured home site designed to transfer home anchoring loads to the ground.

3.3.3 Anchoring Equipment. Ties, straps, cables, turnbuckles, chains, and other approved components, including tensioning devices, that are used to secure a manufactured home to anchors.

3.3.4 Anchoring System. A combination of anchoring equipment and anchors that will, when properly designed and installed, resist the uplift, overturning, and lateral forces on the manufactured home.

3.3.5 Arid. An area subject to 15 in. (381 mm) or less of annual rainfall.

3.3.6* Crossovers. Utility connections in multisection homes that are located where the sections are joined.

3.3.7 Elevation.

3.3.7.1 ***Base Flood Elevation (BFE).*** The elevation of the base flood, including wave height, relative to the datum specified on a jurisdiction's flood hazard map. [***5000,*** 2003]

3.3.7.2 ***Design Flood Elevation (DFE).*** The elevation of the design flood, including wave height, relative to the datum specified on a jurisdiction's flood hazard map. [***5000,*** 2003]

3.3.8 Flood.

3.3.8.1 ***Base Flood.*** The flood having a 1 percent chance of being equaled or exceeded in any given year. [***5000,*** 2003]

3.3.8.2 ***Design Flood.*** The greater of either (1) the base flood or (2) the flood so designated by the jurisdiction as its regulatory flood, with a 1 percent chance, or less, of being equaled or exceeded in any given year. [***5000,*** 2003]

3.3.9 Flood Damage–Resistant Material. Any construction material capable of direct and prolonged contact with floodwaters without sustaining any damage that requires more than cosmetic repairs. [***5000,*** 2003]

3.3.10* Flood Hazard Area. The greater of either (1) the special flood hazard area shown on the flood insurance rate map or (2) the area subject to flooding during the design flood and shown on a jurisdiction's flood hazard map, or otherwise legally designated. [***5000,*** 2003]

3.3.11 Flood Hazard Map. A map delineating the flood hazard area and adopted by a jurisdiction. [***5000,*** 2003]

3.3.12 Footing. That portion of the support system that transmits loads directly to the soil.

3.3.13* Foundation Wall. A wall below the floor nearest grade that serves as a structural support for the home.

3.3.14 Installation. Assembly, at the site of occupancy, of all portions of the manufactured home, connection of the home to existing utility connections, and installation of support and anchoring systems.

3.3.15 Installation Alteration. The replacement, addition, modification, or removal of any components of the required ground support or anchoring systems.

3.3.16 Installation Instructions. Instructions provided by the manufacturer that accompany each manufactured home and detail the manufacturer's requirements for ground support, anchoring systems, and other work completed on site.

3.3.17* Lowest Floor. The floor of the lowest enclosed area of a manufactured home. For the purpose of this standard, *lowest floor* shall mean the bottom of the longitudinal chassis frame beam in A zones, and the bottom of the lowest horizontal structural member supporting the home in V zones. An unfinished or flood-resistant enclosure, used solely for vehicle parking, home access or limited storage, shall not be considered the lowest floor, provided the enclosed area is not constructed so as to render the home in violation of the flood-related provisions of this standard.

3.3.18 Manufactured Home. A structure, transportable in one or more sections, that, in the traveling mode, is 8 body-ft (2.4 m) or more in width or 40 body-ft (12.2 m) or more in length or, when erected on site, is 320 ft^2 (29.7 m^2) or more and that is built on a permanent chassis and designed to be used as a dwelling, with or without a permanent foundation, when connected therein. The term *manufactured home* includes any structure that meets all the provisions of this paragraph except the size requirements and with respect to which the manufacturer voluntarily files a certification required by the regulatory agency, and except that such term shall not include any self-propelled recreational vehicle. Calculations used to determine the number of square feet (square meters) in a structure are based on the structure's exterior dimensions, measured at the largest horizontal projections when erected on site. These dimensions include all expandable rooms, cabinets, and other projections containing interior space, but do not include bay windows.

3.3.19* Manufactured Home Accessory Building or Structure. A building or structure that is an addition to or supplements the facilities provided by a manufactured home.

3.3.20 Manufactured Home Gas Supply Connector. A listed connector designed for connecting the manufactured home to the gas supply source. [**501A,** 2005]

Copyright National Fire Protection Association
Provided by IHS under license with NFPA
No reproduction or networking permitted without license from IHS
Not for Resale

3.3.21 Manufactured Home Park or Subdivision. For all matters related to installation in flood hazard areas, the term *manufactured home park or subdivision* shall mean a parcel (or contiguous parcels) of land divided into two or more manufactured home sites for sale or rent.

3.3.21.1 ***Existing Manufactured Home Park or Subdivision.*** For all matters related to installation in flood hazard areas, the term *existing manufactured home park or subdivision* shall mean a home park or subdivision for which the construction of facilities for servicing the sites (including, at a minimum, the installation of utilities, the construction of streets, and either final site grading or installation of pads) was completed prior to the effective date of the initial adoption of floodplain management regulations or map by the AHJ.

3.3.21.2 ***New Manufactured Home Park or Subdivision.*** For all matters related to installation in flood hazard areas, the term *new manufactured home park or subdivision* shall mean a home park or subdivision for which the construction of facilities for servicing the sites (including, at a minimum, the installation of utilities, the construction of streets, and either final site grading or installation of pads) is completed on or after the effective date of the initial adoption of floodplain management regulations or map by the AHJ.

3.3.22 Manufactured Home Site. A designated parcel of land designed for the accommodation of one manufactured home, its accessory buildings or structures, and accessory equipment, for the exclusive use of the occupants of the home.

3.3.23* Pier. An isolated support used in a support system extending between the footing and the manufactured home.

3.3.24 Ramada. Any freestanding roof or shade structure installed or erected above a manufactured home or any portion thereof. [**501A,** 2005]

3.3.25 Skirting. A weather-resistant material used to enclose the perimeter of the conditioned living area of the home from the bottom of the manufactured home to grade.

3.3.26 Stabilizing Devices. All components of the anchoring and support systems, such as piers, footings, ties, anchoring equipment, anchors, or any other materials and methods of construction, that support and secure the manufactured home to the ground.

3.3.27 Structure. That which is built or constructed, an edifice or building of any kind, or any piece of work artificially built up or composed of parts joined together in some definite manner.

3.3.28 Substantial Damage. For manufactured homes, including support and anchoring systems, located wholly or partly within the flood hazard areas, damage of any origin whereby the cost of restoring the manufactured home, including support and anchoring systems, to its predamage condition would equal or exceed 50 percent of the market value of the manufactured homes, including support and anchoring systems.

3.3.29 Substantial Improvement. For manufactured homes, including support and anchoring systems located wholly or partly within the flood hazard area: (1) any repair, addition, reconstruction, rehabilitation or improvement of the manufactured home, including support and anchoring systems, the cost of which equals or exceeds 50 percent of the market value of the manufactured homes, including support and anchoring systems; (2) if a manufactured home, including support and anchoring systems, has sustained substantial damage, any repairs or reconstruction regardless of the actual work performed. Substantial improvement shall not include any project or improvement of a manufactured home required to correct existing health, sanitary, or safety code violations identified by the AHJ, and that are the minimum necessary to assure safe living conditions.

3.3.30 Support System. Piers, foundation walls, and other equivalent systems approved in accordance with 4.5.1.3 and their footings, anchorage to the manufactured home, shims, and any combination thereof that, when properly installed, support the manufactured home.

3.3.31 Tie. See 3.3.3, Anchoring Equipment.

3.3.31.1 ***Diagonal Tie.*** A tie intended to resist horizontal or shear forces and to resist vertical, uplift, and overturning forces.

3.3.31.2 ***Vertical Tie.*** A tie intended to resist uplifting and overturning forces.

3.3.32 Utility Connection. The connection of the manufactured home to existing utilities that include, but are not limited to, electricity, water, sewer, gas, or fuel oil.

Chapter 4 General

4.1 Preinstallation Considerations.

4.1.1 Prior to location or relocation of a manufactured home, the authority having jurisdiction shall be contacted for installation and permitting requirements.

4.1.2 Flood Hazard Areas. See Chapter 12.

4.2* Alterations. Prior to alteration of a home installation, the authority having jurisdiction shall be contacted to determine if plan approval and permit are required.

4.3* Data Plate. The home installation shall be capable of resisting the loads and conditions listed on the data plate.

4.4 Installation Considerations. The items listed in 4.4.1 through 4.4.4 shall be reviewed prior to installing the manufactured home.

4.4.1 Installation Instructions. Specific installation methods, operations, and assemblies in the manufacturer's installation instructions (if available) shall be followed.

4.4.2 Utility Schematics. Field installations shall be in accordance with the utility schematics provided by the manufacturer, or as required by the AHJ.

4.4.3 Home Installation Manual Supplements. Supplemental pages shall be permitted to be included with the home, outlining special features in the home that are not covered or that differ from this document.

4.4.4 The home shall be installed in accordance with the design zone maps indicated on the data plate.

4.5 Design and Construction. Installation of manufactured homes, including support and anchoring systems, shall be designed and constructed to support all loads and load combinations required by this chapter and elsewhere in this standard.

4.5.1 Design Methods. Design of support systems and their connection to the manufactured home shall be in accordance with 4.5.1.1, 4.5.1.2, or 4.5.1.3.

Copyright National Fire Protection Association
Provided by IHS under license with NFPA
No reproduction or networking permitted without license from IHS
Not for Resale

4.5.1.1 Prescriptive Design. Design shall be in accordance with the provisions of this standard.

4.5.1.2 Engineered Design. Design shall be in accordance with ASCE 7, *Minimum Design Loads for Buildings and Other Structures*.

4.5.1.3 Equivalency. Equivalent systems shall be permitted if approved by the authority having jurisdiction.

4.5.2 Combined Design Methods. Support systems shall not be designed using a combination of prescriptive design in accordance with 6.2.3 through 6.2.5 and engineered design in accordance with 4.5.1.2 or equivalency in accordance with 4.5.1.3, within the support system for a single home or accessory building.

4.5.3 Seismic Design.

4.5.3.1 Seismic Design Criteria.

4.5.3.1.1 Determination of Seismic Design Category. Seismic design categories (SDC) shall be determined from either Table 4.5.3.1.1 or Figure 4.5.3.1.1.

4.5.3.1.2 SDC A, B, and C. The provisions of 4.5.3.2 through 4.5.3.4 shall not apply to SDC A, SDC B, or SDC C.

4.5.3.1.3 SDC D_0, D_1, D_2, and E. Manufactured homes located in SDC D_0, D_1, D_2, and E shall meet the additional requirements of either 4.5.3.2 or 4.5.3.3, and 4.5.3.4.

4.5.3.2 Prescriptive Design.

4.5.3.2.1 Prescriptive design in accordance with the seismic requirements of Chapter 13 shall be permitted for homes located in seismic design categories D_0, D_1, D_2, or E, provided the following:

(1) The 3-second gust basic wind speed is 90 mph (40.2 m/sec) or less, and
(2) The home is located outside of a flood hazard area, or
(3) If within a flood hazard area, is located outside a V zone or floodway

4.5.3.2.2 All other homes located in seismic design categories D_0, D_1, D_2, or E shall have an engineered design or approved equivalent system.

Table 4.5.3.1.1 Seismic Design Category by County

Seismic Design Category	State	Counties
SDC D_0	Alaska	Bristol Bay, Juneau, Northwest Arctic
	Arizona	Coconino, La Paz, Mohave, Pima
	Arkansas	Arkansas, Cleburne, Faulkner, Fulton, Izard, Lonoke, Monroe, Montgomery, Phillips, Prairie, Pulaski, Sharp, Stone, Van Buren, White
	California	Butte, Calaveras, Madera, Sutter, Yuba
	Georgia	Catoosa, Murray, Whitfield
	Hawaii	Honolulu
	Idaho	Adams, Bannock, Bingham, Blaine, Camas, Cassia, Elmore, Franklin, Gem, Jefferson, Madison, Power, Valley, Washington
	Illinois	Bond, Clay, Clinton, Crawford, Edwards, Effingham, Fayette, Jasper, Jefferson, Lawrence, Madison, Marion, Monroe, Randolph, Richland, St. Clair, Wabash, Washington, Wayne
	Indiana	Gibson, Knox, Pike, Posey, Spencer, Vanderburgh, Warrick
	Kentucky	Christian, Daviess, Henderson, Hopkins, McLean, Muhlenberg, Webster
	Maine	Aroostook
	Mississippi	Benton, Coahoma, Lafayette, Marshall, Panola, Quitman, Tate
	Missouri	Carter, Iron, Jefferson, Madison, Oregon, Reynolds, St. Francois, St. Louis, Ste. Genevieve, Shannon, Washington
	Montana	Glacier, Granite, Lewis and Clark, Lincoln, Meagher, Powell, Silver Bow
	Nevada	Clark, Pershing, White Pine
	New Mexico	Bernalillo, Los Alamos, Rio Arriba, Sandoval, Santa Fe, Socorro, Valencia
	New York	Clinton, Essex, Franklin, St. Lawrence
	North Carolina	Cherokee, Columbus, Graham, Swain
	Oregon	Baker, Harney, Hood River, Jackson, Linn, Malheur, Umatilla
	South Carolina	Aiken, Allendale, Barnwell, Beaufort, Chesterfield, Darlington, Dillon, Fairfield, Hampton, Jasper, Kershaw, Lee, Lexington, Marlboro, Richland
	Tennessee	Benton, Blount, Bradley, Chester, Cocke, Decatur, Grainger, Hamblen, Hamilton, Hardeman, Hardin, Henderson, Houston, Humphreys, Jefferson, Knox, Loudon, McMinn, McNairy, Monroe, Montgomery, Polk, Sevier, Stewart, Union
	Texas	El Paso, Hudspeth
	Utah	Beaver, Carbon, Emery, Garfield, Kane, Millard, Piute, Sanpete, Sevier, Washington, Wayne
	Vermont	Franklin, Grand Isle
	Washington	Benton, Chelan, Kittitas, Klickitat, Skamania, Walla Walla, Yakima

--`,,```-`-`,,`,,`,`,,`---

Copyright National Fire Protection Association
Provided by IHS under license with NFPA
No reproduction or networking permitted without license from IHS
Not for Resale

Table 4.5.3.1.1 *Continued*

Seismic Design Category	State	Counties
SDC D_1	Alaska	Fairbanks North Star, Sitka
	Arizona	Yuma
	Arkansas	Independence, Lee, Randolph, Woodruff
	California	Amador, Glenn, Mariposa, Tulare, Tuolumne
	Hawaii	Maui
	Idaho	Boise, Bonneville, Butte, Caribou, Clark, Lemhi, Oneida, Teton
	Illinois	Franklin, Gallatin, Hamilton, Hardin, Perry, Saline, White
	Kentucky	Caldwell, Calloway, Crittenden, Lyon, Trigg, Union
	Mississippi	De Soto, Tunica
	Missouri	Perry, Ripley, Wayne
	Montana	Broadwater, Flathead, Jefferson, Missoula, Park, Sanders
	Nevada	Churchill, Elko, Eureka, Humboldt, Lander, Lincoln, Nye
	Oregon	Clackamas, Columbia, Lake, Marion, Multnomah, Washington
	South Carolina	Bamberg, Calhoun, Horry, Marion, Sumter
	Tennessee	Bedford, Carroll, Fayette, Henry, Madison
	Utah	Iron, Juab, Morgan, Rich, Tooele, Wasatch
	Washington	Clark, Cowlitz, Lewis, San Juan, Skagit, Thurston, Whatcom
	Wyoming	Park, Sublette
SDC D_2	Alaska	Aleutians East, Anchorage, Denali, Haines, Lake and Peninsula, Matanuska-Susitna
	Arkansas	Jackson, Lawrence
	California	Colusa, Del Norte, El Dorado, Fresno, Kings, Merced, Modoc, Nevada, Placer, Plumas, Sacramento, San Joaquin, Sierra, Siskiyou, Stanislaus, Tehama, Yolo
	Idaho	Bear Lake, Custer, Fremont
	Illinois	Jackson, Pope, Williamson
	Kentucky	Livingston, Marshall
	Missouri	Bollinger, Butler
	Montana	Beaverhead, Gallatin, Lake, Madison
	Nevada	Lyon, Mineral, Storey, Washoe
	Oregon	Benton, Clatsop, Coos, Curry, Douglas, Josephine, Klamath, Lane, Lincoln, Polk, Tillamook, Yamhill
	South Carolina	Berkeley, Charleston, Clarendon, Colleton, Dorchester, Florence, Georgetown, Orangeburg, Williamsburg
	Tennessee	Weakley
	Utah	Box Elder, Cache, Summit, Utah
	Washington	Clallam, Grays Harbor, Island, Jefferson, King, Kitsap, Mason, Pacific, Pierce, Snohomish, Wahkiakum
	Wyoming	Lincoln, Teton
SDC E	Alaska	Kenai Peninsula, Kodiak Island, Yakutat
	Arkansas	Clay, Craighead, Crittenden, Cross, Greene, Mississippi, Poinsett, St. Francis
	California	Alameda, Alpine, Contra Costa, Humboldt, Imperial, Inyo, Kern, Lake, Lassen, Los Angeles, Marin, Mendocino, Mono, Monterey, Napa, Orange, Riverside, San Benito, San Bernadino, San Diego, San Francisco, San Luis Obispo, San Mateo, Santa Barbara, Santa Clara, Santa Cruz, Shasta, Solano, Sonoma, Trinity, Ventura
	Hawaii	Hawaii
	Illinois	Alexander, Johnson, Massac, Pulaski, Union
	Kentucky	Ballard, Carlisle, Fulton, Graves, Hickman, McCracken
	Missouri	Cape Girardeau, Dunklin, Mississippi, New Madrid, Pemiscot, Scott, Stoddard
	Nevada	Douglas, Esmeralda
	Tennessee	Crockett, Dyer, Gibson, Haywood, Lake, Lauderdale, Obion, Shelby, Tipton
	Utah	Davis, Salt Lake, Weber

Copyright National Fire Protection Association
Provided by IHS under license with NFPA
No reproduction or networking permitted without license from IHS
Not for Resale

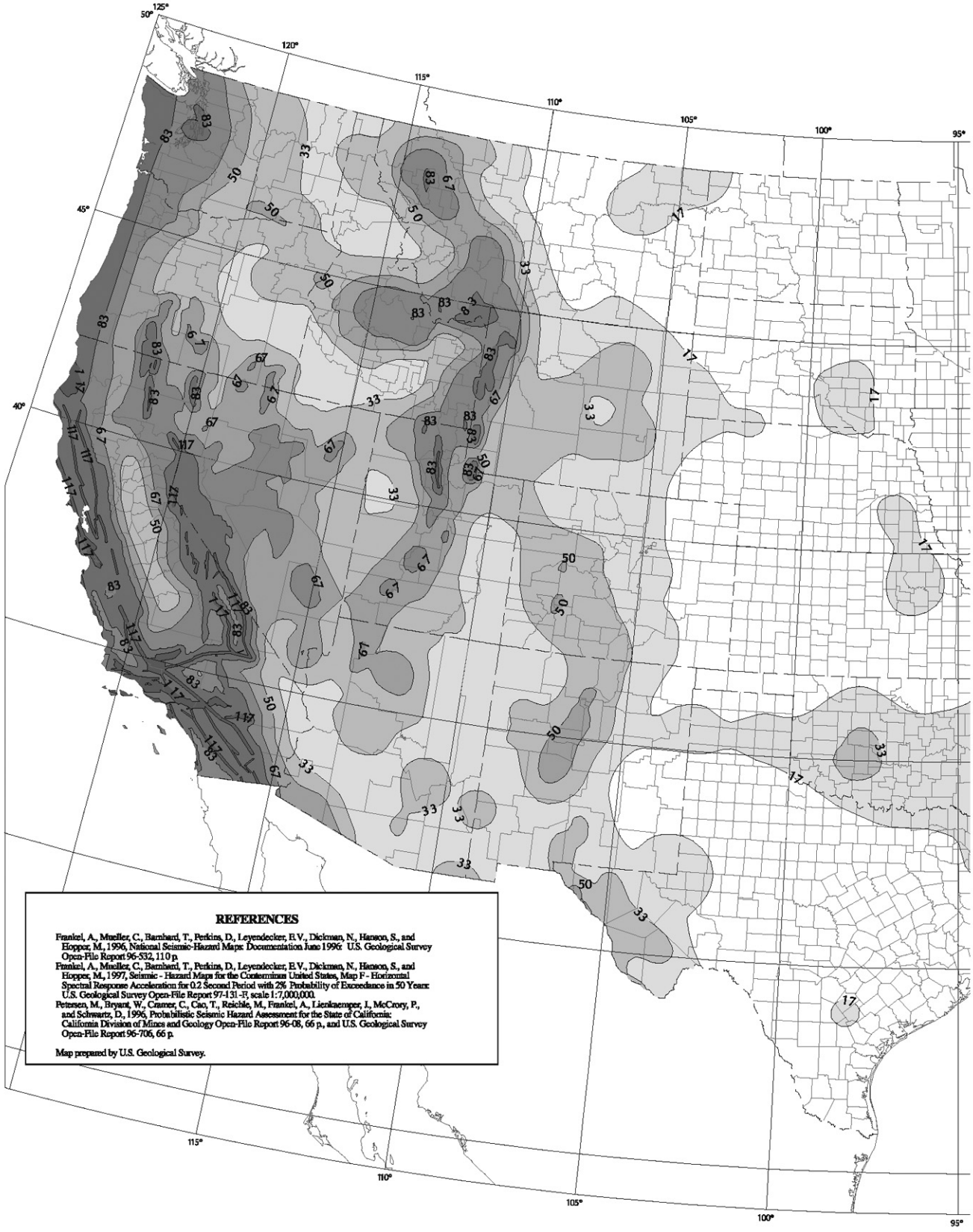

FIGURE 4.5.3.1.1 Seismic Design Category Map.

Copyright National Fire Protection Association
Provided by IHS under license with NFPA
No reproduction or networking permitted without license from IHS
Not for Resale

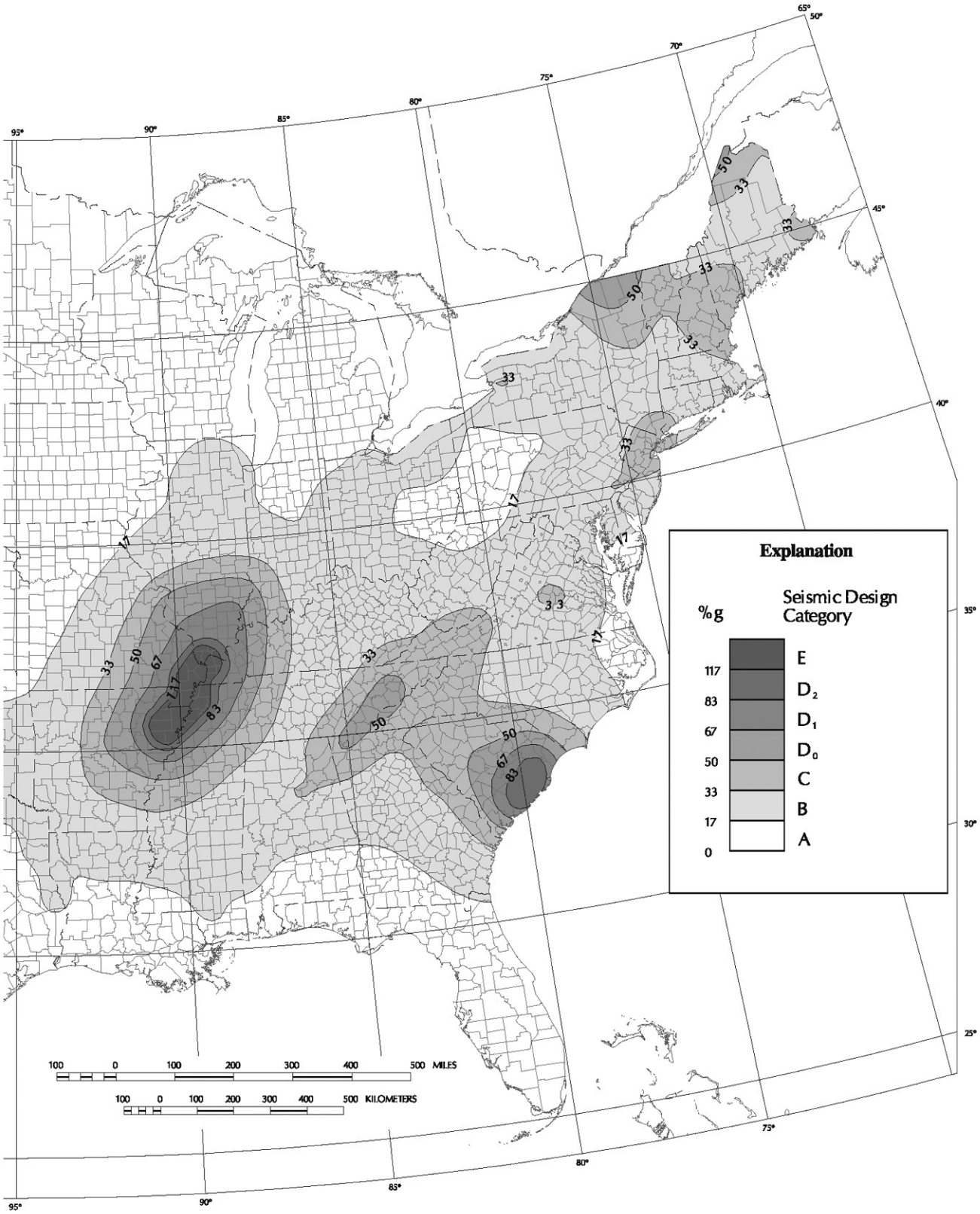

FIGURE 4.5.3.1.1 *Continued*

Copyright National Fire Protection Association
Provided by IHS under license with NFPA
No reproduction or networking permitted without license from IHS
Not for Resale

4.5.3.3 Engineered Design. Engineered design of support systems and their foundations and anchorage, in accordance with 4.5.1.2, shall include all applicable design loads and other applicable seismic provisions of ASCE 7, *Minimum Design Loads for Buildings and Other Structures.*

4.5.3.4 Seismic Installation and Equipment Bracing Requirements. Manufactured homes shall conform to the additional installation and equipment bracing requirements of Chapter 14.

Chapter 5 Site Preparation

5.1 Access for Transporter. Before attempting to move a home, it shall be ensured that the transportation equipment and home can be routed to the installation site and that all transportation permits required by the state, county, or municipality have been obtained.

5.2 Encroachments and Setback Distances. Local laws regarding encroachments in streets, yards, and courts shall be obeyed, and permissible setback distances from property lines and public roads shall be met.

5.3 Fire Separation Distance. Fire separation distances shall be in accordance with Chapter 6 of NFPA 501A, *Standard for Fire Safety Criteria for Manufactured Home Installations, Sites, and Communities*, or the requirements of the authority having jurisdiction, whichever is more stringent.

5.4 Issuance of Permits. All necessary local permits shall be obtained, and all fees shall be paid.

5.5 Site Preparation.

5.5.1 Prior to construction, the area to be occupied by the structure shall be cleared of debris, vegetation, and topsoil to a depth sufficient to remove all organic material.

5.5.2 Soil that supports footings and foundations shall be capable of accommodating all loads required by this standard. Fill soil that supports footings and foundations shall be designed, installed, and tested in accordance with accepted engineering practice. The design bearing capacity of soil shall be determined in accordance with Section 5.6.

5.6 Investigation and Bearing Capacity of Soil.

5.6.1* Presumptive Capacities. Where no unusual soil or saturation conditions are present, the allowable soil bearing pressures in Table 5.6.1 shall be permitted to be used. Higher values shall not be used unless they are substantiated by recognized tests, analysis, or other data, and then approved by the AHJ.

5.6.2 Soil Investigation. Where the soil bearing capacity is unknown or questionable, the AHJ shall be permitted to require evaluation of subsoil conditions by a registered professional engineer or by a load test in accordance with *NFPA 5000, Building Construction and Safety Code*, paragraph 36.3.2. When approved by the AHJ, the soil bearing capacity shall be permitted to be determined from local soil records.

5.6.3 Expansive Soils. [***5000:***36.3.3]

5.6.3.1 Where the nature of the soil is not known in sufficient detail, the authority having jurisdiction shall be permitted to require testing to determine the expansive characteristics of the soil. [***5000:***36.3.3.1]

5.6.3.2 Each potentially expansive stratum of soil above the level where a constant moisture content exists shall be tested in accordance with ASTM D 4318, *Standard Test Methods for Liquid Limit, Plastic Limit, and Plasticity Index of Soils*, to determine its plasticity index (PI). [***5000:***36.3.3.2]

Table 5.6.1 Maximum Allowable Soil Pressures

	Minimum Depth of Footing Below Adjacent Ground		Pressure Permitted if Footing Is at Minimum Depth*	
Class of Material	**ft**	**m**	**psf**	**kN/m²**
Compact fine sand	1	0.3	1000†	48†
Loose sand	2	0.6	500†	24†
Medium stiff clay	1	0.3	2000	96
Soft, sandy clay or clay	2	0.6	1000	48
Compact inorganic sand and silt mixtures	1	0.3	1000	48
Loose inorganic sand and silt mixtures	2	0.6	500	24
Loose organic sand and silt mixtures and peat	—	—	0	0

*These pressures are considered sufficient to prevent failure of the supporting ground but not to prevent excessive foundation movement or settlement where unusual soil or moisture conditions are encountered.

†Values are for footings 1 ft (0.30 m) wide and are permitted to be increased in direct proportion to the width of the footing to a maximum of 2½ times the designated value.

5.6.3.2.1 If the PI of all stratums is less than 15, the soil shall not be considered expansive. [***5000:***36.3.3.2.1]

5.6.3.2.2 If the PI of any stratum is 15 or greater, the soil shall be considered potentially expansive and shall be subjected to additional approved tests and evaluation to determine if the soil will adversely affect the structural integrity and serviceability of the structure. [***5000:***36.3.3.2.2]

5.7 Drainage.

5.7.1 Purpose. Drainage shall be provided that prevents water build-up under the home, shifting or settling of the foundation, dampness in the home, damage to siding and bottom board, buckling of walls and floors, and problems with the operation of doors and windows.

5.7.1.1 The home site shall be graded to permit water to drain from under the home. *(See Figure 5.7.1.1)*

5.7.1.2 All drainage shall be diverted away from the home.

5.7.2* Sloped Site Considerations. Sloped sites shall be protected from surface runoff from the surrounding area.

5.7.3 Drainage Structures. Ditches and culverts shall be permitted to be used to drain surface runoff and to be included in the overall site preparation.

5.7.4 Gutters and Downspouts. When gutters and downspouts are installed, the runoff shall be directed away from the home.

Copyright National Fire Protection Association
Provided by IHS under license with NFPA
No reproduction or networking permitted without license from IHS
Not for Resale

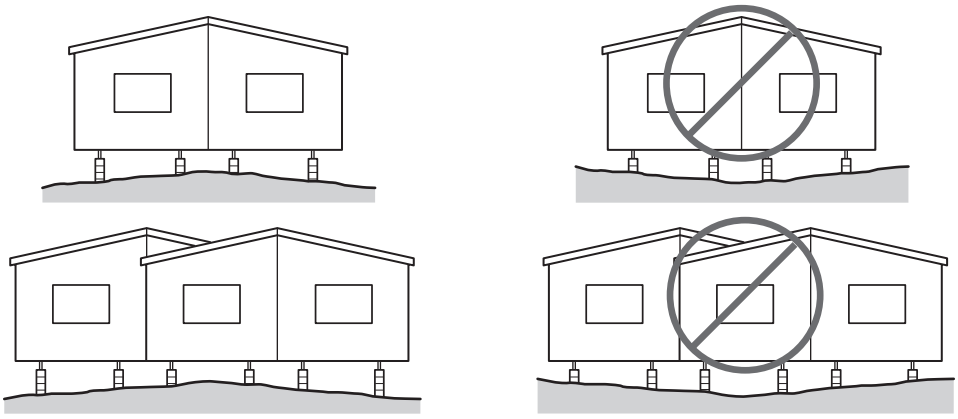

DO crown and grade site to slope away from the home.

DO NOT grade site or set the home so that water collects beneath the home.

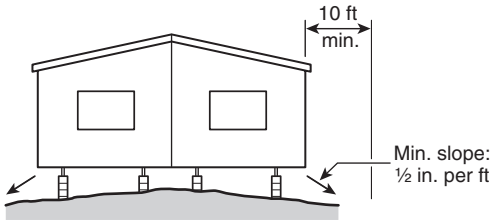

Home sites shall be prepared so that there will be no depressions in which surface water shall accumulate beneath the home. The area of the site covered by the manufactured home shall be graded, sloped, or mechanically designed so as to provide drainage from beneath the home or to property line.

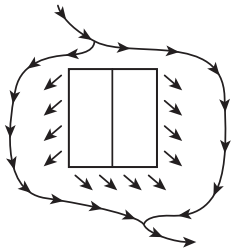

Natural drainage should be diverted around the home.

Note: For SI units, 1 ft = 0.3048 m, 1 in. = 25.4 mm.

FIGURE 5.7.1.1 Grading and Drainage.

5.8 Ground Moisture Control.

5.8.1 Vapor Retarder. If the space under the home is to be enclosed with skirting or other material, a vapor retarder that keeps ground moisture out of the home shall be installed except in arid regions with dry soil conditions, or when approved by the AHJ.

5.8.2 Acceptable Types of Ground Cover. A minimum of 6-mil polyethylene sheeting or its equivalent shall be used.

5.8.3 Proper Installation.

5.8.3.1 When the entire area under the home is required to be covered with the sheeting as noted in 5.8.1, it shall be overlapped at least 12 in. (305 mm) at all joints.

5.8.3.2 Where soil and frost conditions permit placement of footings at grade level, the sheeting shall be placed directly beneath the footings.

Chapter 6 Foundations

6.1 General.

6.1.1 Foundations for manufactured home installations shall be constructed in accordance with Chapter 6. Alternately, support systems shall be permitted to conform to engineered design methods in accordance with 4.5.1.2 or equivalency provisions in accordance with 4.5.1.3.

6.1.2 Details, plans, and/or test data shall be submitted to the AHJ for approval.

6.1.3 Flood Hazard Areas. See Chapter 12.

6.1.4 Seismic Design Categories D_0, D_1, D_2, and E. Support systems for manufactured homes in seismic design categories D_0, D_1, D_2, and E shall meet the additional requirements of 4.5.3.

6.2 Piers.

6.2.1* General. The piers used shall be capable of transmitting the vertical live and dead loads to the foundation below.

6.2.2 Acceptable Piers — Materials Specification.

6.2.2.1* Piers shall be permitted to be concrete blocks, pressure-treated wood having 0.60 pcf (94 N/m^3) retention in accordance with AWPA C9, *Plywood Preservative Treatment by Pressure Processes*, or adjustable metal or concrete piers as shown in Figure 6.2.2.1(a) and Figure 6.2.2.1(b).

6.2.2.2 Manufactured piers shall be listed or labeled for the required load capacity.

6.2.3 Design Requirements.

6.2.3.1 Load-Bearing Capacity.

6.2.3.1.1 The load that each pier must carry shall depend on such factors as the dimensions of the home, the roof live load, the spacing of the piers, and the way the piers are used to support the home.

Copyright National Fire Protection Association
Provided by IHS under license with NFPA
No reproduction or networking permitted without license from IHS
Not for Resale

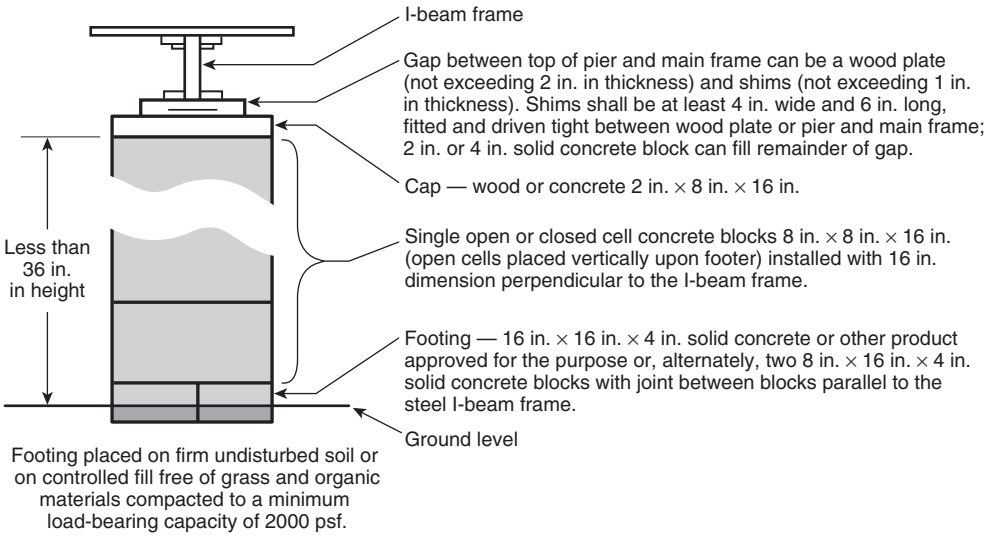

Note: For SI units, 1 in. = 25.4 mm, 1 psf = 0.04788 kN/m^2.

FIGURE 6.2.2.1(a) Typical Footing and Pier Installation — Less than 36 in. in Height

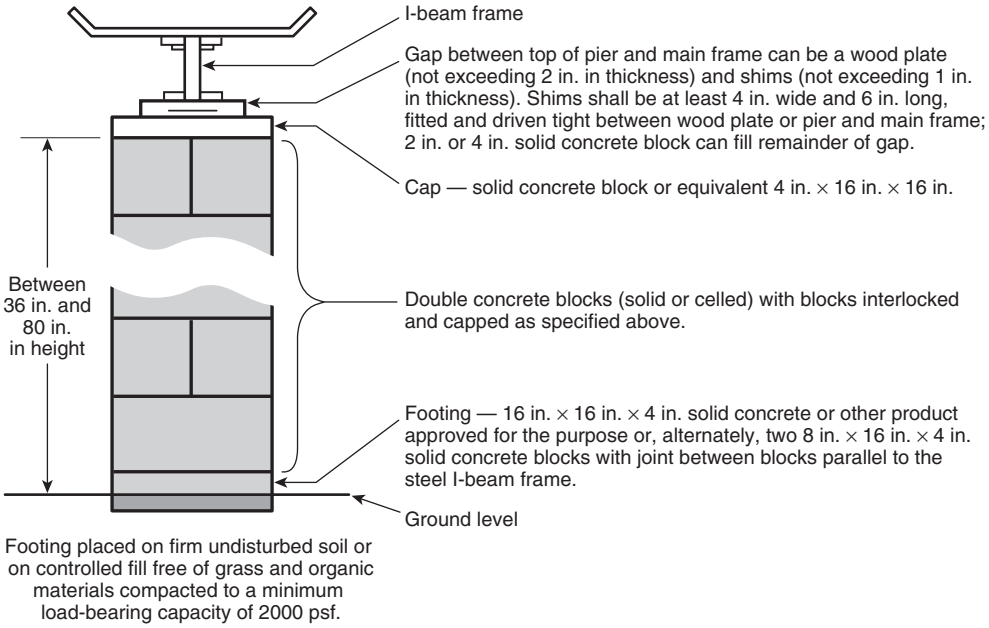

Note: For SI units, 1 in. = 25.4 mm, 1 psf = 0.04788 kN/m^2.

FIGURE 6.2.2.1(b) Typical Footing and Pier Installation — Greater than or Equal to 36 in. in Height.

6.2.3.1.2 Center beam/marriage wall blocking shall be required for multisection homes in accordance with Table 6.2.3.1.2(a) or Table 6.2.3.1.2(b).

6.2.3.1.3 Pier Capacities.

6.2.3.1.3.1 Table 6.2.3.1.2(a) and Table 6.2.3.1.2(b) for pier capacities shall be used when the manufacturer's installation instructions are not available.

6.2.3.1.3.2 Manufactured piers shall be rated at least to the capacities given in Table 6.2.3.1.2(a) and Table 6.2.3.1.2(b), and locally constructed piers shall be designed to transmit these loads safely as required by 6.2.3.2.

6.2.3.2 Configuration.

6.2.3.2.1 Concrete Blocks.

6.2.3.2.1.1* Concrete block piers shall be installed in accordance with Figure 6.2.2.1(a) and Figure 6.2.2.1(b).

6.2.3.2.1.2 Load-bearing (not decorative) concrete blocks shall have nominal dimensions of at least 8 in. × 8 in. × 16 in. (205 mm × 205 mm × 410 mm).

--`,,```-`-`,,`,,`,`,,`---
Copyright National Fire Protection Association
Provided by IHS under license with NFPA
No reproduction or networking permitted without license from IHS
Not for Resale

Table 6.2.3.1.2(a) Minimum Pier Capacity, Frame Plus Perimeter Blocking (Both Frame and Perimeter Blocking Required)

Section Width (ft)	Roof Live Load (psf)	Pier Location	Minimum Pier Capacity (lb)			
			At Maximum Pier Spacing of 4 ft	At Maximum Pier Spacing of 6 ft	At Maximum Pier Spacing of 8 ft	At Maximum Pier Spacing of 10 ft
8	20	Frame	900	1,300	1,800	2,200
		Perimeter	600	800	1,100	1,400
	30	Frame	900	1,300	1,800	1,200
		Perimeter	700	1,100	1,400	1,800
	40	Frame	900	1,300	1,800	2,200
		Perimeter	900	1,300	1,800	2,200
10	20	Frame	1,100	1,700	2,200	2,800
		Perimeter	700	1,100	1,400	1,800
	30	Frame	1,100	1,700	2,200	2,800
		Perimeter	900	1,400	1,800	2,300
	40	Frame	1,100	1,700	2,200	2,800
		Perimeter	1,100	1,700	2,200	2,800
12	20	Frame	1,300	1,900	2,600	3,200
		Perimeter	800	1,200	1,600	2,000
	30	Frame	1,300	1,900	2,600	3,200
		Perimeter	1,100	1,600	2,100	2,600
	40	Frame	1,300	1,900	2,600	3,200
		Perimeter	1,300	1,900	2,600	3,200
14	20	Frame	1,500	2,200	3,000	3,700
		Perimeter	900	1,400	1,900	2,400
	30	Frame	1,500	2,200	3,000	3,700
		Perimeter	1,200	1,800	2,400	3,000
	40	Frame	1,500	2,200	3,000	3,700
		Perimeter	1,500	2,200	3,000	3,700
16	20	Frame	1,700	2,600	3,400	4,300
		Perimeter	1,100	1,600	2,200	2,700
	30	Frame	1,700	2,600	3,400	4,300
		Perimeter	1,400	2,100	2,800	3,500
	40	Frame	1,700	2,600	3,400	4,300
		Perimeter	1,700	2,600	3,400	4,300
18	20	Frame	1,900	2,900	3,900	4,800
		Perimeter	1,200	1,800	2,500	3,100
	30	Frame	1,900	2,900	3,900	4,800
		Perimeter	1,600	2,400	3,200	3,900
	40	Frame	1,900	2,900	3,900	4,800
		Perimeter	1,900	2,900	3,900	4,800

For SI units, 1 ft = 0.3048 m, 1 psf = 0.04788 kN/m^3, 1 lb = 4.448 N.

Notes:

(1) Frame blocking is the total of the frame weight plus perimeter weight.

(2) When using frame and perimeter blocking, the marriage lines of the multisection home are double the perimeter weight.

Copyright National Fire Protection Association
Provided by IHS under license with NFPA
No reproduction or networking permitted without license from IHS
Not for Resale

Table 6.2.3.1.2(b) Minimum Pier Capacity, Multisection Pier Loading Under Marriage Line

		Pier Load and Minimum Pier Capacity (lb)						
Section Width (ft)	Roof Live Load (psf)	For Mating Wall Opening of 5 ft	For Mating Wall Opening of 10 ft	For Mating Wall Opening of 15 ft	For Mating Wall Opening of 20 ft	For Mating Wall Opening of 25 ft	For Mating Wall Opening of 30 ft	For Mating Wall Opening of 35 ft
8	20	600	1,200	1,800	2,400	3,000	3,600	4,200
	30	800	1,600	2,400	3,200	4,000	4,800	5,600
	40	1,000	2,000	3,000	4,000	5,000	5,000	7,000
10	20	800	1,500	2,300	3,000	3,800	4,500	5,300
	30	1,000	2,000	3,000	4,000	5,000	6,000	7,000
	40	1,300	2,500	3,800	5,000	6,300	7,500	8,800
12	20	900	1,800	2,600	3,500	4,400	5,300	6,100
	30	1,200	2,300	3,500	4,700	5,800	7,000	8,200
	40	1,500	2,900	4,400	5,800	7,300	8,800	10,200
14	20	1,000	2,000	3,000	4,100	5,100	6,100	7,100
	30	1,400	2,700	4,100	5,400	6,800	8,100	9,500
	40	1,700	3,400	5,100	6,800	8,400	10,100	11,800
16	20	1,200	2,300	3,500	4,700	5,800	7,000	8,100
	30	1,600	3,100	4,700	6,200	7,800	9,300	10,900
	40	1,900	3,800	5,800	7,500	9,700	11,600	13,600

For SI units, 1 ft = 0.3048 m, 1 psf = 0.04788 kN/m^3, 1 lb = 4.448 N.

Notes:

(1) Example: For a 14 ft section width, 30 psf roof live load, and 18 ft wide mating wall opening, follow down the "Section Width" column to 14 ft. Follow across to 30 psf in the "Roof Live Load" column. Since the mating wall opening is 18 ft wide, follow across to the column headed "20." (For any opening width that is not shown, use the next higher number on the chart.) The required pier capacity is 5400 pounds.

(2) Sidewall opening pier capacity is one-half the mating wall opening weight of an identical or next larger span. For piers supporting two adjacent openings, the capacity is the combination of the weights from each opening.

6.2.3.2.1.3 The concrete blocks shall be stacked with their hollow cells aligned vertically.

6.2.3.2.1.4 When piers are constructed of blocks stacked side by side, each layer shall be at right angles to the preceding one, as shown in Figure 6.2.2.1(a) and Figure 6.2.2.1(b).

6.2.3.2.2 Caps.

6.2.3.2.2.1 Structural loads shall be evenly distributed across capped hollow block piers, as shown in Figure 6.2.2.1(a) and Figure 6.2.2.1(b).

6.2.3.2.2.2 Caps shall be of solid masonry of at least 4 in. (100 mm) nominal thickness, or of dimensional lumber at least 2 in. (50 mm) nominal thickness, or of steel.

6.2.3.2.2.3 All caps shall be of the same length and width as the piers on which they rest.

6.2.3.2.3 Gaps.

6.2.3.2.3.1 Nominal 4 in. × 6 in. (100 mm × 150 mm) shims shall be used to level the home and fill any gaps between the base of the I-beam and the top of the pier cap.

6.2.3.2.3.2 Shims shall be used in pairs as shown in Figure 6.2.2.1(a) and Figure 6.2.2.1(b), and shims shall be driven in tightly so that they do not occupy more than 1 in. (25 mm) of vertical space.

6.2.3.2.3.3 Wood plates no thicker than 2 in. (50 mm) shall be used to fill in any remaining vertical gaps.

6.2.3.2.4 Pier Heights. Manufactured pier heights shall be selected so that the adjustable risers do not extend more than 2 in. (50 mm) when finally positioned.

6.2.3.3 Clearance Under Homes.

6.2.3.3.1 A minimum clearance of 12 in. (305 mm) shall be maintained beneath the lowest member of the main frame (I-beam or channel beam) in the area of utility connections.

6.2.3.3.2 No more than 25 percent of the lowest member of the main frame of the home shall be less than 12 in. (305 mm) above grade.

6.2.3.4 All cap and shim materials within 18 in. (455 mm) of the ground shall be preservative-treated wood, naturally durable wood species, or equivalent.

6.2.4 Design Procedures for Concrete Block Piers.

6.2.4.1 Piers Less Than 36 in. (915 mm) High.

6.2.4.1.1 Piers less than 36 in. (915 mm) high shall be permitted to be constructed of single, open, or closed-cell concrete blocks, 8 in. × 8 in. × 16 in. (205 mm × 205 mm × 410 mm).

6.2.4.1.2 The piers shall be installed so that the long sides are at right angles to the supported I-beam, as shown in Figure 6.2.2.1(a) and Figure 6.2.2.1(b).

6.2.4.1.3 Open cells shall be positioned at right angles to the footers.

--`,,`-`-`,,`,,`,`,,`---

Copyright National Fire Protection Association
Provided by IHS under license with NFPA
No reproduction or networking permitted without license from IHS
Not for Resale

6.2.4.1.4 Horizontal offsets shall not exceed ½ in. (13 mm) top to bottom.

6.2.4.1.5 Mortar shall not normally be required.

6.2.4.1.6 Manufactured piers shall be listed and labeled.

6.2.4.2* Piers 36 in. (915 mm) to 80 in. (2030 mm) High and Corner Piers. All piers between 36 in. (915 mm) and 80 in. (2030 mm) high and all corner piers over three blocks high shall be constructed out of double, interlocked concrete blocks as shown in Figure 6.2.2.1(a) and in Figure 6.2.2.1(b).

6.2.4.3 Piers over 80 in. (2030 mm) High. Piers over 80 in. (2030 mm) high shall be designed by a registered professional engineer.

6.2.4.4 Elevated Homes. When more than one-fourth of the area of a home is installed so that the bottom of the main frame members are more than 36 in. (915 mm) above ground level, the home stabilizing devices shall be designed by a qualified registered professional engineer.

6.2.5 Location and Spacing.

6.2.5.1 The location and spacing of piers shall depend upon the dimensions and weight of the home, the roof load zone, the type of construction (single- or multisection), and such other factors as the location of doors or other openings.

6.2.5.2 Piers shall be no more than 2 ft (610 mm) from either end and not more than 10 ft (3048 mm) center to center under the main frame beam.

6.2.5.3* Single-Section Homes. The recommended location and spacing of piers for a single-section home shown in Figure 6.2.5.3 shall be used when the manufacturer's installation instructions are not available.

6.2.5.4* Multisection Homes. The recommended location and spacing of piers for a multisection home shown in Figure 6.2.5.4 shall be used when the manufacturer's installation instructions are not available.

6.2.5.5* Perimeter Blocking. Supports shall be placed on both sides of side wall exterior doors and any other side wall openings greater than 48 in. (1220 mm) (such as entry and sliding glass doors), and under porch posts, factory installed fireplaces, and wood stoves.

6.3 Footings. Footing materials shall conform to Section 6.3, and other materials approved for footings shall be permitted to be used when approved by the AHJ if they provide equal load-bearing capacity and resistance to decay. Footings shall be placed on undisturbed soil or compacted fill. Every pier shall be supported by a footing.

6.3.1 Acceptable Types of Footings.

6.3.1.1 Concrete. Footings shall be permitted to consist of either of the following:

(1) 4 in. (100 mm) nominal precast concrete pads meeting or exceeding ASTM C 90, *Standard Specification for Loadbearing Concrete Masonry Units,* without reinforcement, with at least a 28-day compressive strength of 3000 psi (20.7 MN/m^2)
(2) 6 in. (150 mm) cast-in-place concrete pads, slabs, or ribbons with at least a 28-day compressive strength of 3000 psi (20.7 MN/m^2)

6.3.1.2 Pressure-Treated Permanent Wood.

6.3.1.2.1 A minimum of two layers of nominal 2 in. (50 mm) thick pressure-treated wood having 0.60 pcf (94 N/m^3) retention in accordance with AWPA C2, *Standard for the Preservative Treatment of Lumber, Timber, Bridge Ties and Mine Ties, by Pressure Processes*, or AWPA C9, *Plywood Preservative Treatment by Pressure Processes*, with the long dimensions of the second layer placed under the pier and perpendicular to that of the first layer, shall be used.

6.3.1.2.2 Pressure-treated footings shall be permitted to consist of nominal 2 in. (50-mm) thick pressure-treated wood in accordance with AWPA C2, or a single layer of a minimum thickness of ¾ in. (19 mm) and a maximum size of 16 in. × 16 in. (410 mm × 410 mm), or, for larger sizes, two pieces of nominal ¾ in. thick (²³⁄₃₂ actual) (19 mm) plywood (APA-rated sheathing, exposure 1, PS1) pressure-treated for soil contact in accordance with AWPA C9.

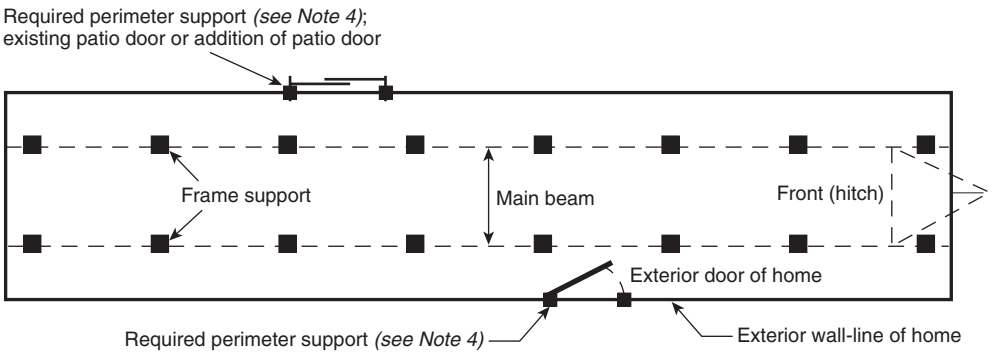

Notes:
(1) See Table 6.2.3.1.2(a) for required pier capacity and spacing.
(2) See Table 6.2.3.1.2(b) and Section 6.3 for footing requirements.
(3) Locate piers a maximum of 12 in. (305 mm) from both ends.
(4) Place piers on both sides of entry doors, at any other openings greater than 48 in. (1220 mm) width, such as patio or atrium doors, and under porch posts, factory-installed fireplaces, and wood stoves.

FIGURE 6.2.5.3 Typical Blocking Diagram for Single Section.

Copyright National Fire Protection Association
Provided by IHS under license with NFPA
No reproduction or networking permitted without license from IHS
Not for Resale

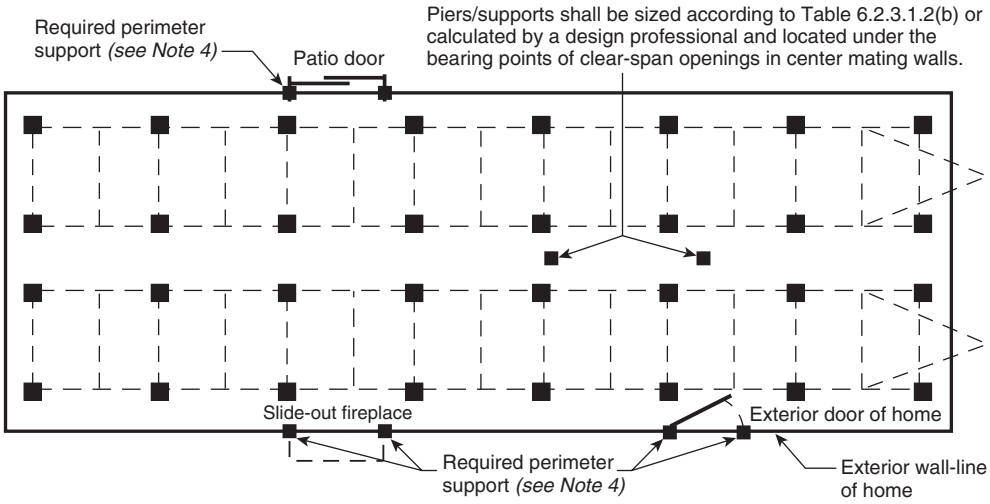

Notes:
(1) See Table 6.2.3.1.2(a) for required pier capacity and spacing.
(2) See Table 6.2.3.1.2(b) and Section 6.3 for footing requirements.
(3) Locate piers a maximum of 12 in. (305 mm) from both ends.
(4) Place piers on both sides of entry doors, at any other openings greater than 48 in. (1220 mm) width, such as patio or atrium doors, and under porch posts, factory-installed fireplaces, and wood stoves.

FIGURE 6.2.5.4 Typical Blocking Diagram for Multisection Homes.

6.3.1.3 ABS Footing Pads.

6.3.1.3.1 ABS footing pads shall be permitted in accordance with pad manufacturer installation instructions.

6.3.1.3.2 ABS footing pads shall be listed or labeled for the required load capacity.

6.3.2 Placement in Freezing Climates.

6.3.2.1 Conventional Footings. Footings placed in freezing climates shall comply with 6.3.2.1.1, 6.3.2.1.2, or 6.3.2.1.3.

6.3.2.1.1 In areas subject to ground frost heave, footings shall be placed below the frost line.

6.3.2.1.2 Local authorities shall be consulted to determine the depth of the frost line.

6.3.2.1.3 In the absence of a local code, the frost penetration map provided in Figure 6.3.2.1.3 shall be used as a guide.

6.3.2.2 Floating Slab Systems.

6.3.2.2.1 When properly designed by a registered professional engineer, a "floating slab system" shall be permitted to be used above the frost line.

6.3.2.2.2 The design shall accommodate the anchorage requirements identified in Section 7.5.

6.3.2.3* Insulated Foundations.

6.3.2.3.1 Footings shall be permitted to be placed above the frost line when the home is provided with a perimeter foundation or skirting having insulation properties sufficient to prevent freezing of the soil under or adjacent to every load-bearing component of the foundation and acceptable for this purpose to the authority having jurisdiction.

6.3.2.3.2 Insulation systems shall be compatible with the requirement to cross-ventilate the entire space under the home.

6.3.3* Sizing of Footings. The sizing of footings depends on the load-bearing capacity of both the piers and the soil. It shall be permitted to construct footings in accordance with Table 6.3.3.

6.3.4* Combination Systems. Support systems that combine both load-bearing capacity and uplift resistance shall also be sized for the applicable design loads.

6.4 Permanent Foundations.

6.4.1 Designs for permanent foundations (such as basements, crawl spaces, or load-bearing perimeter foundations) shall be designed by a registered professional engineer and constructed in accordance with local codes.

6.4.2 When no such design is available from the home manufacturer or covered in the state building code, a registered professional engineer shall be consulted in order to obtain a design to satisfy the house support requirements.

6.5 Special Considerations.

6.5.1 Severe Climatic Conditions. The provisions of 7.5.4 shall be required when the conditions in 7.5.4 exist at the home installation site.

6.5.2 Special Snow Load Conditions. Homes designed for and located in areas with roof live loads greater than 40 psf (1.9 kPa) shall be installed according to the home manufacturer's installation instructions or designed by a registered professional engineer.

Copyright National Fire Protection Association
Provided by IHS under license with NFPA
No reproduction or networking permitted without license from IHS
Not for Resale

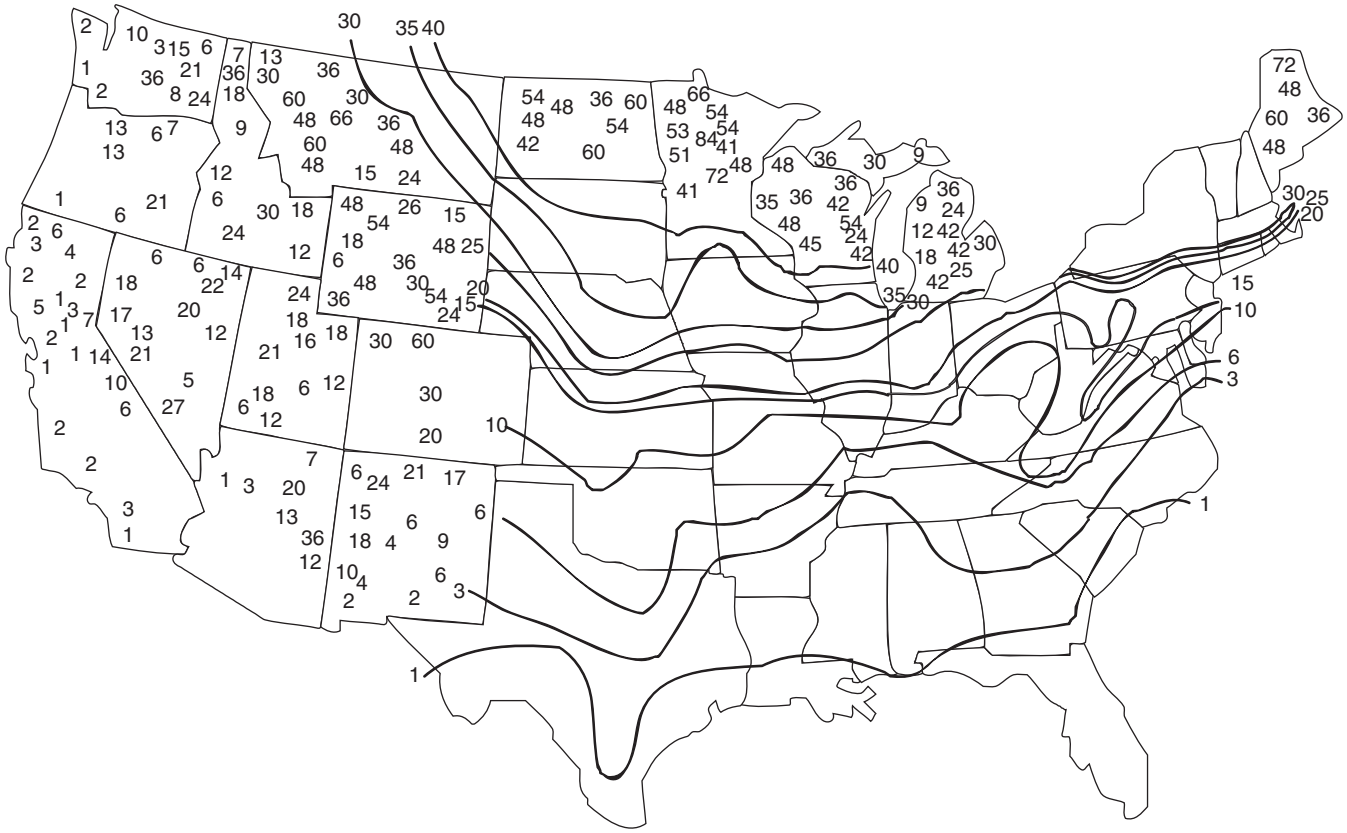

Note: Numbers are inches below ground level (for SI units, 1 in. = 25.4 mm).

FIGURE 6.3.2.1.3 Frost Penetration Map.

Table 6.3.3 Footing Size

		Single Stack Pier (8 in. × 16 in.)		Double Stack Pier (16 in. × 16 in.)	
Soil Capacity (psf)	Minimum Footing Size	Maximum Footing Capacity (lb)	Unreinforced Cast-in-Place Minimum Thickness (in.)	Maximum Footing Capacity (lb)	Unreinforced Cast-in-Place Minimum Thickness (in.)
1,000	16 ×16	1,600	6	1,600	6
	20 ×20	2,600	6	2,600	6
	24 ×24	3,700	6	3,700	6
	30 ×30	5,600	8	5,800	6
	36 ×36	7,900	10	8,100	8
	42 ×42	10,100	12	10,700	10
	48 ×48	13,000	15	13,600	12
1,500	16 ×16	2,500	6	2,500	6
	20 ×20	4,000	6	4,000	6
	24 ×24	5,600	8	5,700	6
	30 ×30	8,600	10	8,900	6
	36 ×36	12,200	12	12,600	8
	42 ×42	16,100	15	16,500	12
	48 ×48	20,400	18	21,000	15

(Sheet 1 of 2)

Copyright National Fire Protection Association
Provided by IHS under license with NFPA
No reproduction or networking permitted without license from IHS
Not for Resale

Table 6.3.3 *Continued*

Soil Capacity (psf)	Minimum Footing Size	Single Stack Pier (8 in. × 16 in.) Maximum Footing Capacity (lb)	Single Stack Pier (8 in. × 16 in.) Unreinforced Cast-in-Place Minimum Thickness (in.)	Double Stack Pier (16 in. × 16 in.) Maximum Footing Capacity (lb)	Double Stack Pier (16 in. × 16 in.) Unreinforced Cast-in-Place Minimum Thickness (in.)
2,000	16 ×16	3,400	6	3,400	6
	20 ×20	5,300	6	5,300	6
	24 ×24	7,600	8	7,700	6
	30 ×30	11,600	10	11,900	8
	36 ×36	16,300	15	16,900	10
	42 ×42	21,700	18	22,700	12
2,500	16 ×16	4,300	6	4,300	6
	20 ×20	6,700	6	6,700	6
	24 ×24	9,600	8	9,700	6
	30 ×30	14,700	12	15,000	8
	36 ×36	20,800	15	21,400	10
3,000	16 ×16	5,200	6	5,200	6
	20 ×20	8,100	8	8,100	6
	24 ×24	11,500	10	11,700	6
	30 ×30	17,800	12	18,100	8
	36 ×36	25,000	18	25,700	12
4,000	16 ×16	7,000	6	7,000	6
	20 ×20	10,800	8	10,900	6
	24 ×24	15,500	10	15,600	8
	30 ×30	23,800	15	24,200	10

For SI units, 1 psf = 0.04788 kN/m^2, 1 in. = 25.4 mm, 1 lb = 4.448 N. *(Sheet 2 of 2)*

Notes:
(1) The footing sizes shown are for square pads and are based on the area (in.^{2}), shear, and bending required for the loads shown. Other configurations, such as rectangular configurations, can be used, provided the area is equal to or greater than the area of the square footing shown in the table and the distance from the edge of the pier to the edge of the footing is not exceeded.
(2) The 6 in. cast-in-place values can be used for 4 in. unreinforced precast concrete footings.
(3) The capacity values listed have been reduced by the dead load of the concrete footing.

Chapter 7 Installation Procedures

7.1* Before Moving Manufactured Home to Location. The site shall be prepared in accordance with Chapter 5, and utilities shall be available when required by the AHJ.

7.2* Positioning of Home. The home shall be installed and leveled by qualified licensed installation personnel who are acceptable to the AHJ.

7.3* Interconnection of Multisection Homes. The interconnection of multisection homes shall be completed in accordance with the manufacturer's installation instructions. When the manufacturer's installation instructions are not available, the interconnection of multisection homes shall be in accordance with the AHJ.

7.4 Crossover Connections for Multisection Manufactured Homes.

7.4.1 Utility Crossovers. Water, drainage, gas, electricity, and telephone utility crossovers shall be connected as outlined in Chapter 10.

7.4.2 Ductwork Crossovers.

7.4.2.1 Metal plumber's tape, galvanized metal straps, or plastic tape shall be used around the duct collar and secured tightly.

7.4.2.2 If metal straps are used, they shall be secured with sheet metal screws.

7.4.2.3 The duct shall be fastened to the collar with a minimum of three sheet metal screws equally spaced around the collar.

7.4.2.4 The flexible air-conditioning or heating ducts shall be installed in accordance with the duct manufacturer's instructions.

7.4.2.5 The duct shall be suspended or supported above the ground and arranged under the floor to minimize compression or kinking in any location, as shown in Figure 7.4.2.5(a) and Figure 7.4.2.5(b). In-floor crossover ducts shall be permitted in accordance with 7.4.2.7.

7.4.2.6 Exposed crossover ducts shall be insulated with materials having a minimum R-8 value.

Copyright National Fire Protection Association
Provided by IHS under license with NFPA
No reproduction or networking permitted without license from IHS
Not for Resale

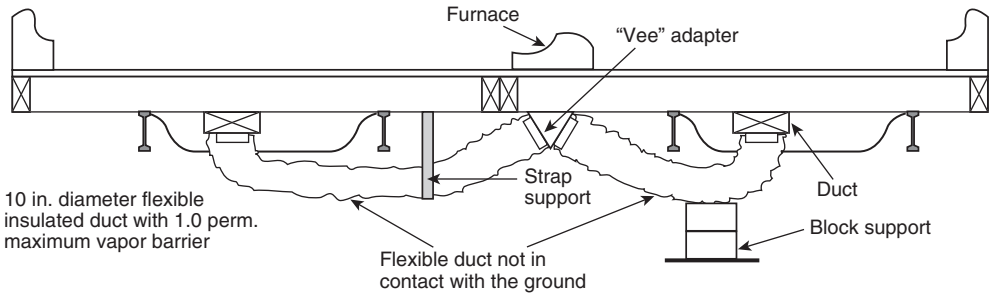

Notes:
(1) This system is utilized when a crossover duct has not been built into the floor and the furnace is outside the I-beam. With this type of installation, it is necessary for two flexible ducts to be installed.
(2) For SI units, 1 in. = 25.4 mm

FIGURE 7.4.2.5(a) Crossover Duct Installation (Option 1).

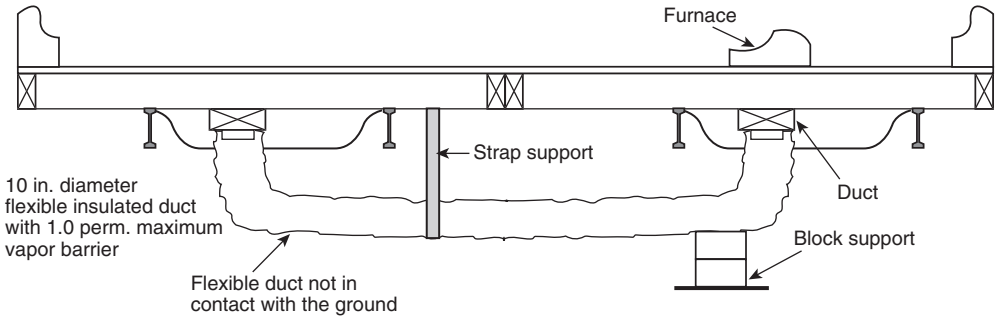

Notes:
(1) This system is used when a crossover duct has not been built into the floor and the furnace is situated directly over the main duct in one section of the home. A single flexible duct is then used to connect the two sections to each other.
(2) For SI units, 1 in. = 25.4 mm.

FIGURE 7.4.2.5(b) Crossover Duct Installation (Option 2).

7.4.2.7 The in-floor crossover duct connection shall be permitted to be installed per the manufacturer's installation instructions or sealed with foam tape prior to joining sections of the home.

7.5 Anchoring Instructions.

7.5.1 Security Against the Wind.

7.5.1.1 After blocking and leveling, the installer shall secure the manufactured home against the wind, unless the AHJ permits otherwise.

7.5.1.2 The type of installation shall be the determining factor in deciding how the manufactured home shall be secured against the wind as described in 7.5.2 and 7.5.3.

7.5.1.3 Use of ground anchors is not required for homes located in areas having a 3-second gust basic wind speed of 90 mph (40.2 m/sec) or less, provided the support system meets the prescriptive seismic requirements of Chapter 13.

7.5.2* Normal Installations.

7.5.2.1 The anchoring or foundation system shall be capable of meeting the loads required by NFPA 501, *Standard on Manufactured Housing*.

7.5.2.2 When using another type of installation, which is not listed in accordance with 3.2.4, a registered professional engineer shall be consulted.

7.5.2.3 Specifications for Tie-Down Straps and Anchors.

7.5.2.3.1 Anchors. Anchors shall be capable of resisting a minimum total load capacity of 4725 lb (21.0 kN) and a working capacity of 3150 lb (14.0 kN). The resistance capability of anchors and anchoring equipment shall be certified by a registered professional engineer, architect, or nationally recognized testing laboratory.

7.5.2.3.2 Tie-Down Straps. A minimum of 1¼ in. × 0.035 in. (32 mm × 0.9 mm) zinc coating (0.30 oz/ft^2) steel strapping conforming to ASTM D 3953, *Standard Specification for Strapping, Flat Steel and Seals*, Type 1, Grade 1, Finish B with a minimum total capacity of 4725 lb (21.0 kN) and a working capacity of 3150 lb (14.0 kN) shall be used. Slit or cut edges of coated strapping shall not be required to be zinc coated.

7.5.2.4 Number and Location of Anchors.

7.5.2.4.1 The number and location of anchors and anchor straps for installation of single-section and multisection manufactured homes shall conform to the manufacturer's installation

Copyright National Fire Protection Association
Provided by IHS under license with NFPA
No reproduction or networking permitted without license from IHS
Not for Resale

instructions. When relocating the home and the manufacturer's installation instructions are not available, the number and location of anchors and anchor straps shall conform to Table 7.5.2.4.1 and Figure 7.5.2.4.1.

7.5.2.4.2 Longitudinal Anchorage. Manufactured homes shall have anchors to resist longitudinal forces.

7.5.2.4.3 Anchor Installation.

7.5.2.4.3.1 The requirements in 7.5.2.4.1 shall be used to determine the spacing of anchors and their accompanying anchor straps based on the soil classification determined in accordance with Section 5.5, and to determine if soil testing was performed using either a soil torque probe or locally accepted values approved by the AHJ.

Table 7.5.2.4.1 Maximum Anchor Spacing for Manufactured Homes

Strap Method	Anchor Minimum Ultimate Load Capacity	Maximum Anchor Spacing		
		Wind Zone I	Wind Zone II[a]	Wind Zone III[a]
Single strap	4725 lb	11 ft 0 in.	6 ft 0 in.	4 ft 6 in.
Double strap	4725 lb[b,c]	11 ft 0 in.[2]	6 ft 0 in.[2]	4 ft 6 in.[2]

For SI units, 1 lb = 4.448 N, 1 ft = 0.3048 m, 1 in. = 25.4 mm.

Notes:

(1) Table 7.5.2.4.1 is applicable to single-story homes with roof slopes less than 20 degrees, a maximum sidewall height of 8 ft, and a maximum pier height of 4 ft.

(2) See NFPA 501, *Standard on Manufactured Housing*, for determination of wind zones.

[a]Unless reduced spacing is specified by the AHJ.

[b]All homes located in Wind Zones II and III shall have a vertical tie installed at each diagonal tie location.

[c]Unless listed for a higher capacity.

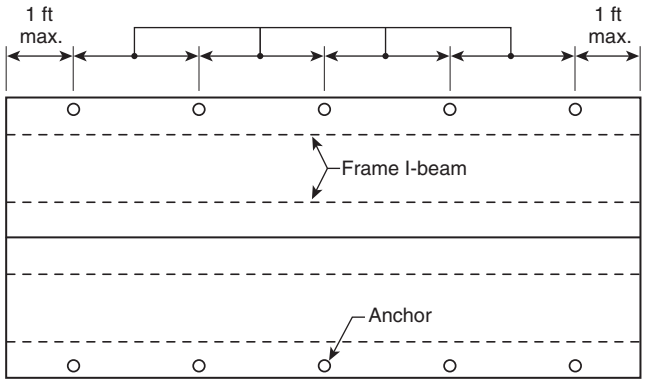

Notes:
(1) See Table 7.5.2.4.1 for maximum anchor spacing.
(2) For SI units, 1 ft = 0.3048 m.

FIGURE 7.5.2.4.1 Anchor Locations and Spacings.

7.5.2.4.3.2 The installed anchor size (length) shall be for the soil class for which it is listed and approved by the AHJ.

7.5.2.4.3.3 All anchors shall be installed with the stabilizer plates in accordance with their listing and the anchor manufacturer's installation instructions.

7.5.2.4.4 Each anchor shall be manufactured and installed in accordance with its listing by a nationally recognized testing agency, which shall list the anchor for use in a classified soil based on a nationally recognized testing protocol.

7.5.3 Sidewall or Over-the-Roof Straps. If sidewall or over-the-roof straps are installed on the home, they shall be connected to an anchoring device, or an alternate method shall be provided that enables the home to meet this requirement.

7.5.4 Severe Climatic Conditions.

7.5.4.1 Freezing Climates. In frost-susceptible soils or high water table locations, anchor augers shall be installed below the frost line or in accordance with a design by a registered professional engineer.

7.5.4.2* Severe Wind Zones.

7.5.4.2.1 Before a home is installed within 1500 ft (457 m) of a coastline in Wind Zones II or III, the manufacturer's installation instructions shall be used.

7.5.4.2.2 When the manufacturer's installation instructions are not available, the design shall be by a registered professional engineer.

7.5.4.3 Flood Hazard Areas. See Chapter 12.

7.6 Installation of On-Site Structures.

7.6.1 All buildings and structures shall be designed to support all of their own live and dead loads.

7.6.2 Fire separation distance shall be provided, as the AHJ requires, for occupancy.

7.6.3 Expanding Rooms.

7.6.3.1 Expanding rooms shall be installed in accordance with the manufacturer's instructions.

7.6.3.2 When the manufacturer's instructions are not available, perimeter blocking shall be installed in accordance with Table 6.2.3.1.2(a), and anchors shall be installed in accordance with 7.5.2.4.

7.6.4 Garages and Carports.

7.6.4.1 A garage or carport shall be installed in accordance with the manufacturer's instructions, in accordance with a design by a registered professional engineer, or in accordance with the requirements of the AHJ.

7.6.4.2 The garage or carport shall be supported independently of the factory-built portion of the manufactured home or in accordance with the manufacturer's installation instructions.

7.6.4.3 Electrical circuits in a garage shall be provided with ground-fault circuit protection.

7.6.5 Porches. Site-constructed porches shall be constructed and inspected according to applicable building codes.

7.6.6 Steps, Stairways, and Landings. Steps, stairways, and landings shall be constructed and inspected according to applicable building codes.

Copyright National Fire Protection Association
Provided by IHS under license with NFPA
No reproduction or networking permitted without license from IHS
Not for Resale

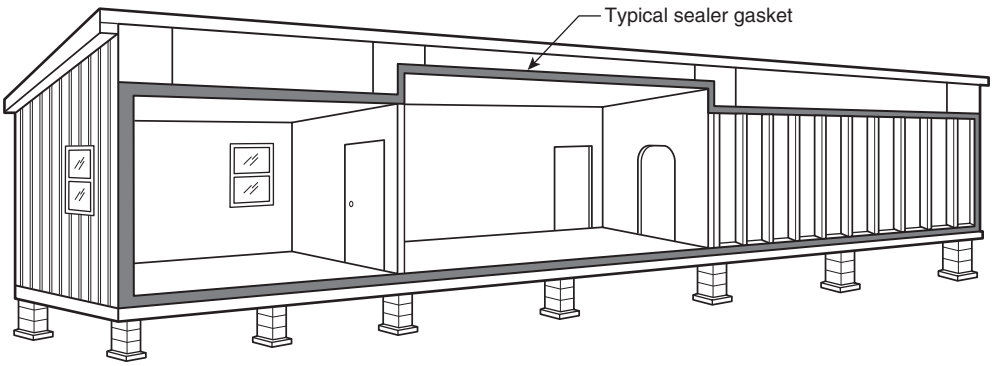

Note: On multisection manufactured homes, install sealer gasket on the ceiling, endwalls, and floor mating line prior to joining the sections together.

FIGURE 7.7.1.3 Typical Sealer Gasket Installation.

7.7 Installation Close-Up/Finishing.

7.7.1* Single and Multisection Exterior and Interior Close-Up.

7.7.1.1 Prior to installing the siding, the polyethylene sheeting covering exterior walls in transit shall be completely removed.

7.7.1.2 Holes in the roof made in transit or setup shall be sealed with exterior sealant.

7.7.1.3 Mating line (sealer) gaskets shall be installed according to Figure 7.7.1.3. Sealer gasket materials shall conform to the manufacturer's installation instructions or shall be permitted to consist of aerosol dispensed polyurethane foams to form a tight seal when the manufactured home floor sections are positioned together. Carpet pads or fiberglass insulation products shall not be used as sealer gasket materials.

7.7.2* Exterior Siding Close-Up.

7.7.2.1 Exterior siding shall be installed according to the siding manufacturer's installation instructions.

7.7.2.2 Exterior close-up strips/trim shall be fastened securely and sealed with exterior sealant.

7.7.3 Interior Close-Up.

7.7.3.1 All shipping blocking, strapping, or bracing shall be removed from appliances, windows, and doors.

7.7.3.2 All loose items packaged or shipped with the home shall be installed.

7.7.3.3 All ship loose wall paneling shall be installed using a ¼ in. (6.3 mm) bead of polyvinyl acetate (PVA) adhesive on all framing members.

7.7.3.4 Panels shall be fastened with minimum 1 in. (25 mm) long staples or nails at 6 in. (150 mm) on center panel edges and 12 in. (305 mm) on center in the field.

7.7.4 Unfinished Gypsum Wallboard.

7.7.4.1 Homes shipped with unfinished gypsum wallboard and/or ceiling shall be finished on site.

7.7.4.2 The interior finishes shall have the following maximum flame spread ratings measured in accordance with NFPA 255, *Standard Method of Test of Surface Burning Characteristics of Building Materials*:

(1) Ceilings — 75
(2) Walls — 75
(3) General — 200
(4) Adjacent to cooking range — 50
(5) Adjacent to or enclosing a furnace or water heater — 25

7.7.5* Bottom Board Repair.

7.7.5.1 The bottom board covering shall be inspected for any loosening or areas that might have been damaged or torn during installation or transportation.

7.7.5.2 Any splits, tears, or openings in the bottom covering shall be resealed with approved tape or patches specifically designed for repairs of the bottom covering.

7.7.5.3 Plumbing P-traps shall be checked to be sure they are well insulated and covered.

7.7.5.4 All edges of patches shall be taped.

Chapter 8 Site-Installed Features

8.1 Installation of Site-Installed Features. Where applicable and specific to the manufacturer's product, optional features shall be permitted to be installed.

8.2* Hinged Roofs and Eaves.

8.2.1 The manufacturer's installation instructions shall be consulted when erecting and securing in place hinged roofs or hinged eaves.

8.2.2 Site installations of vent stacks, including furnaces, water heaters, plumbing stacks, fireplaces, and powered exhaust fans, shall conform with the manufacturer's installation instructions.

8.3 Garden and Bay Windows. Shipped-loose items, such as garden or bay windows, shall be installed in accordance with the manufacturer's installation instructions.

8.4 Awnings and Ramadas. Only freestanding products with support columns shall be chosen.

8.5 Miscellaneous Lights and Fixtures.

8.5.1 Exterior lighting fixtures, ceiling-suspended (paddle) fans, and chain-hung lighting fixtures shall be permitted to be installed when the home is delivered.

Copyright National Fire Protection Association
Provided by IHS under license with NFPA
No reproduction or networking permitted without license from IHS
Not for Resale

8.5.2 Grounding Fixtures.

8.5.2.1 All of the installed exterior lighting fixtures and ceiling fans per 8.5.1 shall be grounded by a fixture-grounding screw or by a fixture-grounding wire.

8.5.2.2 For chain-hung lighting fixtures, as shown in Figure 8.5.2.2, both a fixture-grounding screw and a fixture-grounding wire shall be used.

8.5.3 Where lighting fixtures are mounted on combustible surfaces such as hardboard, a noncombustible ring, as shown in Figure 8.5.3, shall be installed to completely cover the combustible surface exposed between the fixture canopy and the wiring outlet box.

8.5.4 Siding.

8.5.4.1 If siding has not been installed at a lighting fixture location, the outlet box shall be removed, and the siding shall be installed with a hole for the outlet box.

8.5.4.2 The outlet box shall be reinstalled and the same process followed as for other lighting fixtures, which shall be installed according to their listings.

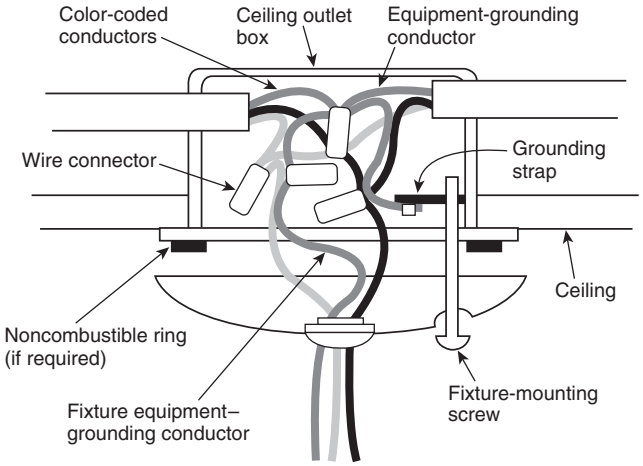

FIGURE 8.5.2.2 Installation of Chain-Hung Lighting Fixture.

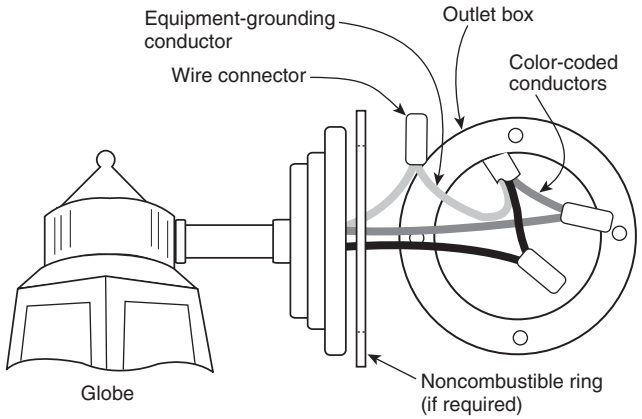

FIGURE 8.5.3 Installation of Surface-Mounted Exterior Lighting Fixture.

8.5.5 Exterior Lights.

8.5.5.1 The junction box covers shall be removed, and wire-to-wire connections shall be made using wire connectors.

8.5.5.2 General practice shall be to connect wires black-to-black, white-to-white, and equipment ground-to-equipment ground.

8.5.5.3 The wires shall be pushed into the box, and the lighting fixture shall be secured to the junction box.

8.5.5.4 The lighting fixture shall be caulked around its base to ensure a watertight seal to the side wall.

8.5.5.5 The light bulb shall be installed, and the globe shall be attached.

8.5.6 Ceiling Fans.

8.5.6.1 To reduce the risk of injury, ceiling suspended (paddle) fans shall be installed with the trailing edges of the blades at least 6 ft 4 in. (1930 mm) above the floor.

8.5.6.2 The wiring shall be connected as shown in Figure 8.5.6.2(a) and Figure 8.5.6.2(b), and the manufacturer's instructions shall be followed.

8.5.6.3 Electrical boxes listed for the application and the weight of the fan to be supported shall be installed where the box is used as the sole support of a ceiling-suspended (paddle) fan.

8.6* Ventilation Options. The component manufacturer's instructions shall be followed.

8.7 Optional Panels, Siding, and Molding. Optional panels, siding and molding, if provided, shall be installed in accordance with Figure 8.7(a), Figure 8.7(b), and Figure 8.7(c).

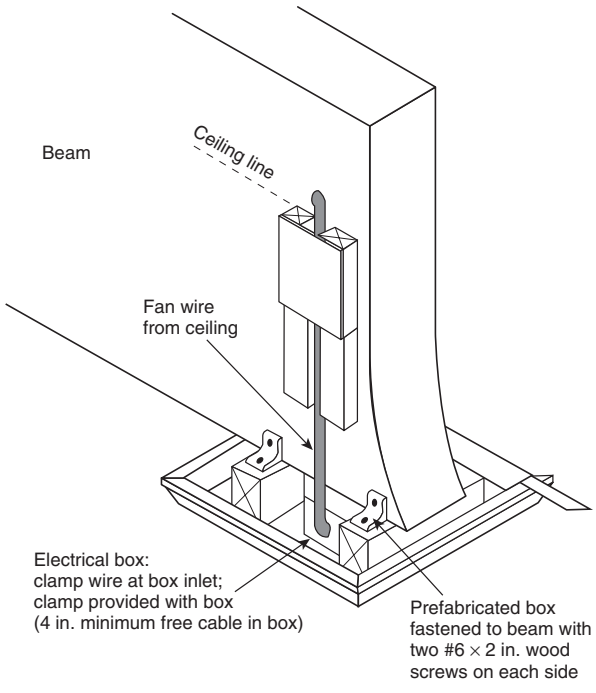

Note: For SI units, 1 in. = 25.4 mm.

FIGURE 8.5.6.2(a) Electrical Outlet Box and Support Structure for Ceiling-Suspended (Paddle) Fan.

--`,,`-`-`,,`,,`,`,,`---
Copyright National Fire Protection Association
Provided by IHS under license with NFPA
No reproduction or networking permitted without license from IHS
Not for Resale

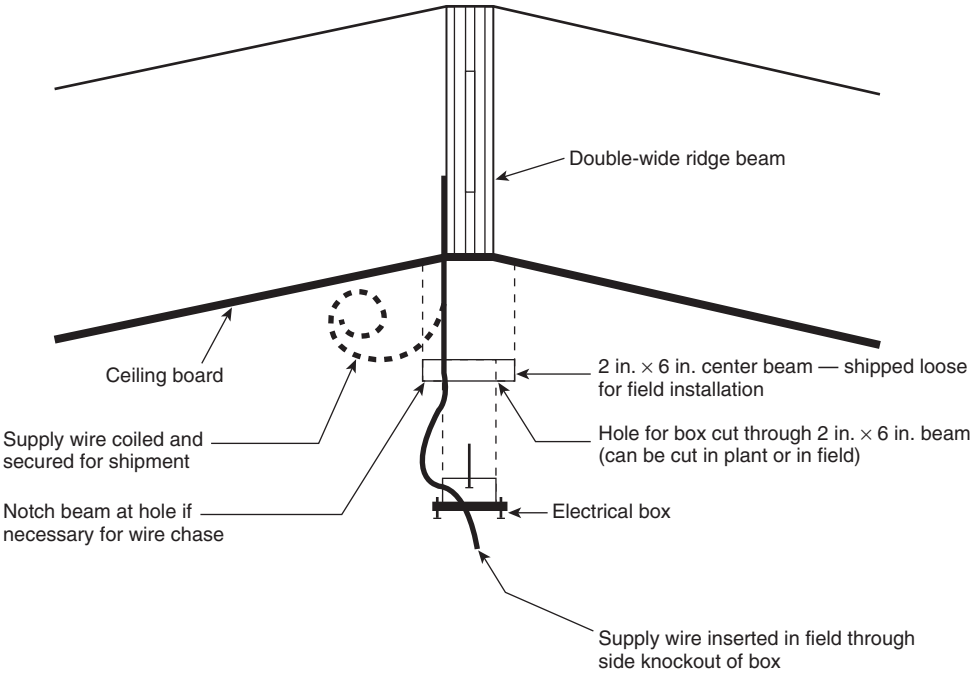

Note: For SI units, 1 in. = 25.4 mm.

FIGURE 8.5.6.2(b) Ceiling-Suspended (Paddle) Fan Installation.

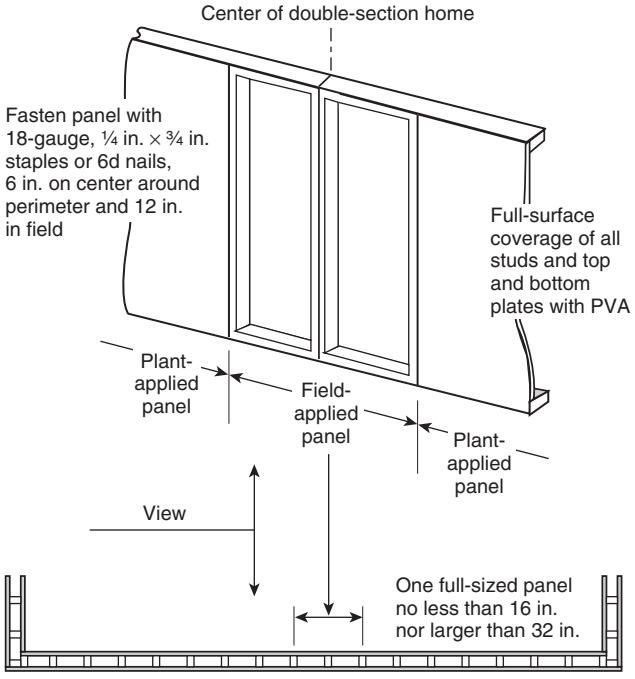

Notes:
(1) Specific designs must be approved by a design approval primary inspection agency (DAPIA).
(2) For SI units, 1 in. = 25.4 mm.

FIGURE 8.7(a) Installation of Field-Applied Interior End-Wall Panel.

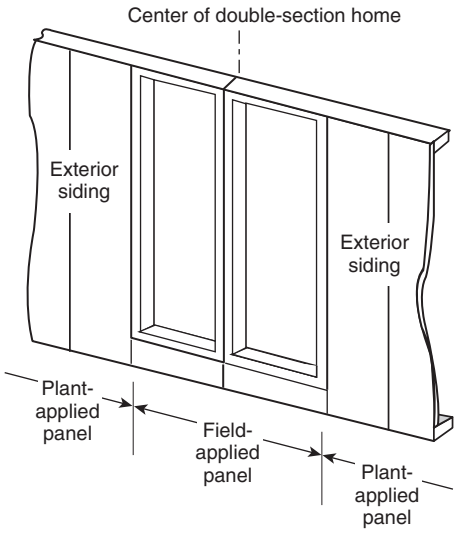

Notes:
(1) One full-sized panel no less than 16 in. (406.4 mm) nor larger than 32 in. (812.8 mm)
(2) Fasten exterior panel to the studs in accordance with the siding manufacturer's installation instructions.

FIGURE 8.7(b) Installation of Field-Applied Wood Siding at End Wall.

Copyright National Fire Protection Association
Provided by IHS under license with NFPA
No reproduction or networking permitted without license from IHS
Not for Resale

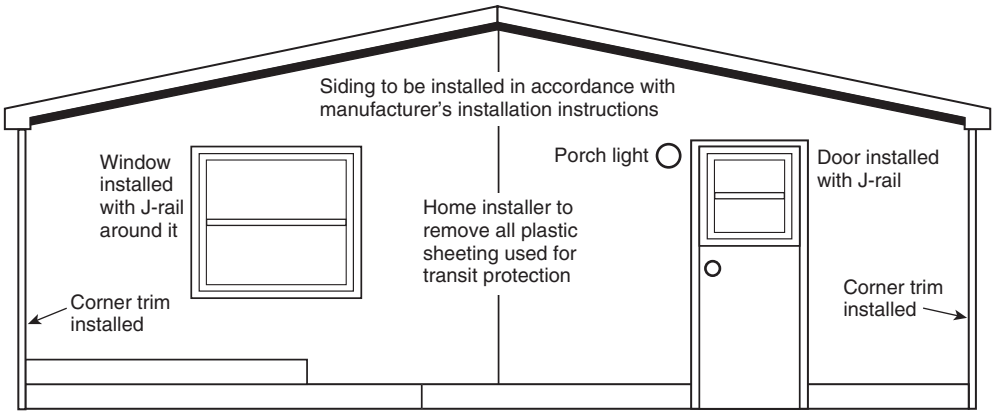

Notes:
(1) Double-section homes with horizontal-lap siding can be shipped with no siding on the front and rear end walls.
(2) The manufacturer will install doors/windows trimmed with J-rail and corner trim and will cover with plastic sheeting for transit. All siding, starter trim, fasteners, and vents will be shipped loose in the home for installation on setup.
(3) Home installer to complete installation after home is set up, including the installation of roof vents if required.

FIGURE 8.7(c) Installation of Field-Applied Horizontal Lap Siding.

8.8 Skirting.

8.8.1* Construction.

8.8.1.1 Skirting, if used, shall be of weather-resistant materials.

8.8.1.2 Skirting shall not be attached in a manner that can cause water to be trapped between the siding and trim or forced up into the wall cavities trim to which it is attached.

8.8.1.3 All wood skirting within 6 in. (150 mm) of the ground shall be pressure treated or naturally resistant to decay and termite infestations.

8.8.2 Ventilation.

8.8.2.1* Ventilation shall be provided for the crawl space with skirting as follows:

(1) At a minimum of 1 ft^2 (0.1 m^2) of free area for every 150 ft^2 (14 m^2) of the home's floor area
(2) Except in arid regions with dry soil conditions, the following shall be permitted:
   (a) A uniform 6-mil (0.15 mm) polyethylene sheet material or other acceptable vapor barrier material shall be permitted to be installed on the ground surface beneath the home to further reduce moisture.
   (b) Where an acceptable ground vapor barrier is installed and one such ventilation opening is within 3 ft (0.9 m) of each corner of the home, the total area of ventilation openings shall be permitted to be reduced to 1 ft^2 (0.1 m^2) for every 1500 ft^2 (140 m^2) of the home's floor area.

8.8.2.2 Ventilation openings shall be placed at or near each corner of the home and as high as practicable.

8.8.2.3 Openings shall be located on at least two opposite sides to provide cross-ventilation.

8.8.3 Access opening(s) not less than 18 in. (455 mm) in any dimension and not less than 3 ft^2 (0.28 m^2) in area shall be provided and shall be located so that any water supply and sewer drain connections located under the home are accessible for inspections.

8.8.4 Dryer vents, air-conditioning condensation drains, and combustion air inlets shall pass through the skirting to the outside.

8.9* Telephone and Cable TV. Telephone and cable TV wiring shall be installed in accordance with acceptable wiring practices.

8.10 Joints and Seams. Where appropriate, all joints and seams that were disturbed during relocation of the home shall be made weatherproof.

Chapter 9 Preparation of Appliances

9.1* Clothes Dryer Vent. When installed, the clothes dryer shall exhaust to the exterior of the home, beyond any perimeter skirting installed around it, as shown in Figure 9.1.

9.2* Comfort Cooling Systems. Comfort cooling systems shall be installed according to the manufacturer's installation instructions and applicable regulations of the AHJ.

9.2.1 Air Conditioners.

9.2.1.1* An installed central air-conditioning system shall not exceed the rating shown on the home's compliance certificate.

9.2.1.2* Circuit Rating. If a manufactured home is factory provided with an exterior outlet to energize heating and/or air-conditioning equipment, the branch circuit rating on the tag adjacent to this outlet shall be equal to or greater than the minimum circuit ampacity identified on the equipment rating plate.

9.2.1.3 A-Coil Units.

9.2.1.3.1 A-coil air-conditioning units shall be compatible and listed for use with the furnace in the home.

Copyright National Fire Protection Association
Provided by IHS under license with NFPA
No reproduction or networking permitted without license from IHS
Not for Resale

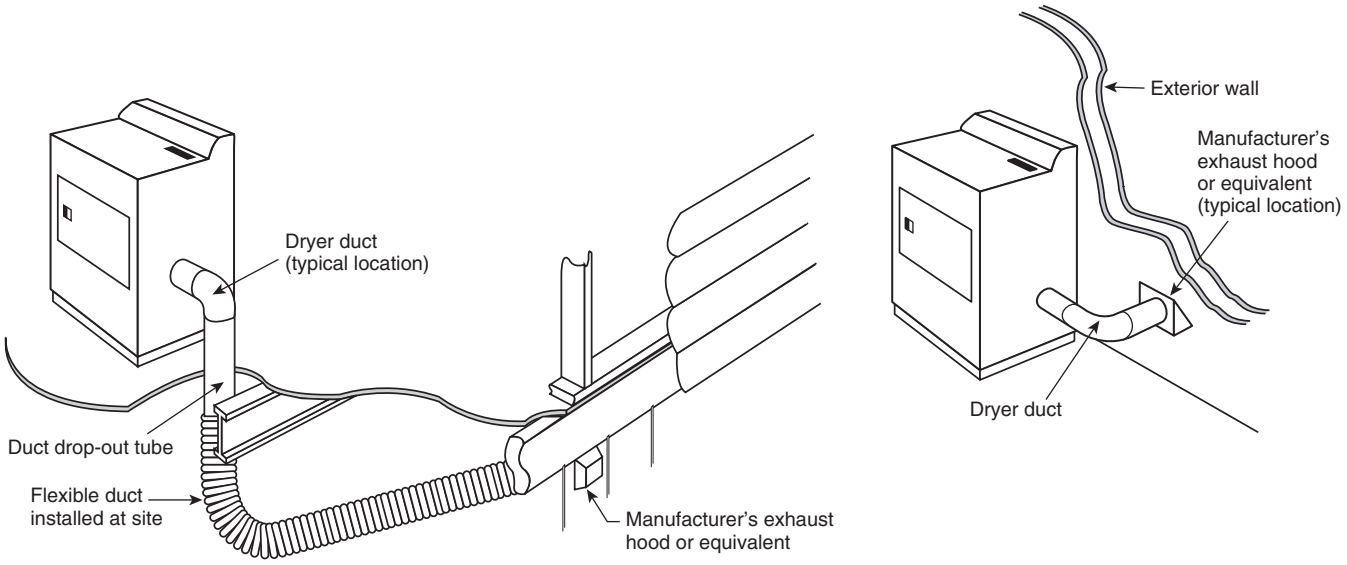

Notes:
(1) Installation of the exhaust system must be in accordance with the dryer manufacturer's instructions.
(2) Dryer exhaust system must not terminate under the home.

FIGURE 9.1 Dryer Exhaust System.

9.2.1.3.2 The air conditioner manufacturer's instructions shall be followed.

9.2.1.3.3 All condensation shall be directed beyond the perimeter of the home by means specified by the equipment manufacturer.

9.2.2 Heat Pumps. Heat pumps shall be installed according to the heat pump manufacturer's instructions.

9.2.3 Evaporative Coolers.

9.2.3.1 A roof-mounted cooler shall be installed in accordance with the appliance manufacturer's instructions. The discharge grille shall not be closer than 3 ft (1 m) from a smoke alarm.

9.2.3.2 Before installing a roof-mounted cooler, the person installing the cooler shall ensure that the roof will support the weight of the cooler.

9.2.3.3 A rigid base shall be provided to evenly distribute the cooler's weight over several rafters.

9.3 Fireplace and Wood-Stove Chimneys and Air Inlets.

9.3.1 Fireplaces and wood stoves shall be permitted to require on-site installation of additional section(s) of approved, listed chimney pipe, a spark arrester, and a rain-cap assembly.

9.3.2 Fireplace and wood-stove chimneys and air inlets shall be installed in accordance with their listings and Figure 9.3.2.

9.3.3 All fireplaces and wood stoves installed shall be listed for use in manufactured housing.

9.3.4 For field installation, approval from the manufacturer and the authority having jurisdiction shall be required to ensure compliance with the required standards.

9.3.5* Minimum Extensions Above Roof. The finished chimney shall extend at least 3 ft (915 mm) above the highest point at which it penetrates the roof and at least 2 ft (610 mm) higher than any building or other obstruction located within a horizontal distance of 10 ft (3050 mm).

9.3.6 Required Components. The required components of a correctly installed chimney shall be as shown in Figure 9.3.2.

9.3.7* Combustion Air Duct Inlets.

9.3.7.1 Combustion air intake ducts shall end just below the bottom covering of the floor.

9.3.7.2 The ducts shall be extended to the outside when the home has a basement or crawl space.

9.3.7.3 The air intake ducts shall not be installed in a garage.

9.3.7.4 The combustion air inlet shall not be allowed to drop material from the hearth to the area beneath the home.

9.3.7.5 The inlet damper shall be located above the expected snow level, as shown in Figure 9.3.2.

9.4 Range, Cooktop, and Oven Venting.

9.4.1 If the home is equipped with a combination range (cooktop)/grill or oven that contains its own exhaust system, the vent shall exhaust to the exterior of the home.

9.4.2 When the vent exhausts through the floor and if perimeter skirting is installed, the vent shall extend through the exterior perimeter of the home.

9.5 Flood Hazard Areas. See Chapter 12.

9.6 Seismic Design Categories D_0, D_1, D_2, and E. Manufactured homes located in seismic design categories D_0, D_1, D_2, and E shall conform to the additional installation and equipment bracing requirements of 4.5.3.4.

Copyright National Fire Protection Association
Provided by IHS under license with NFPA
No reproduction or networking permitted without license from IHS
Not for Resale

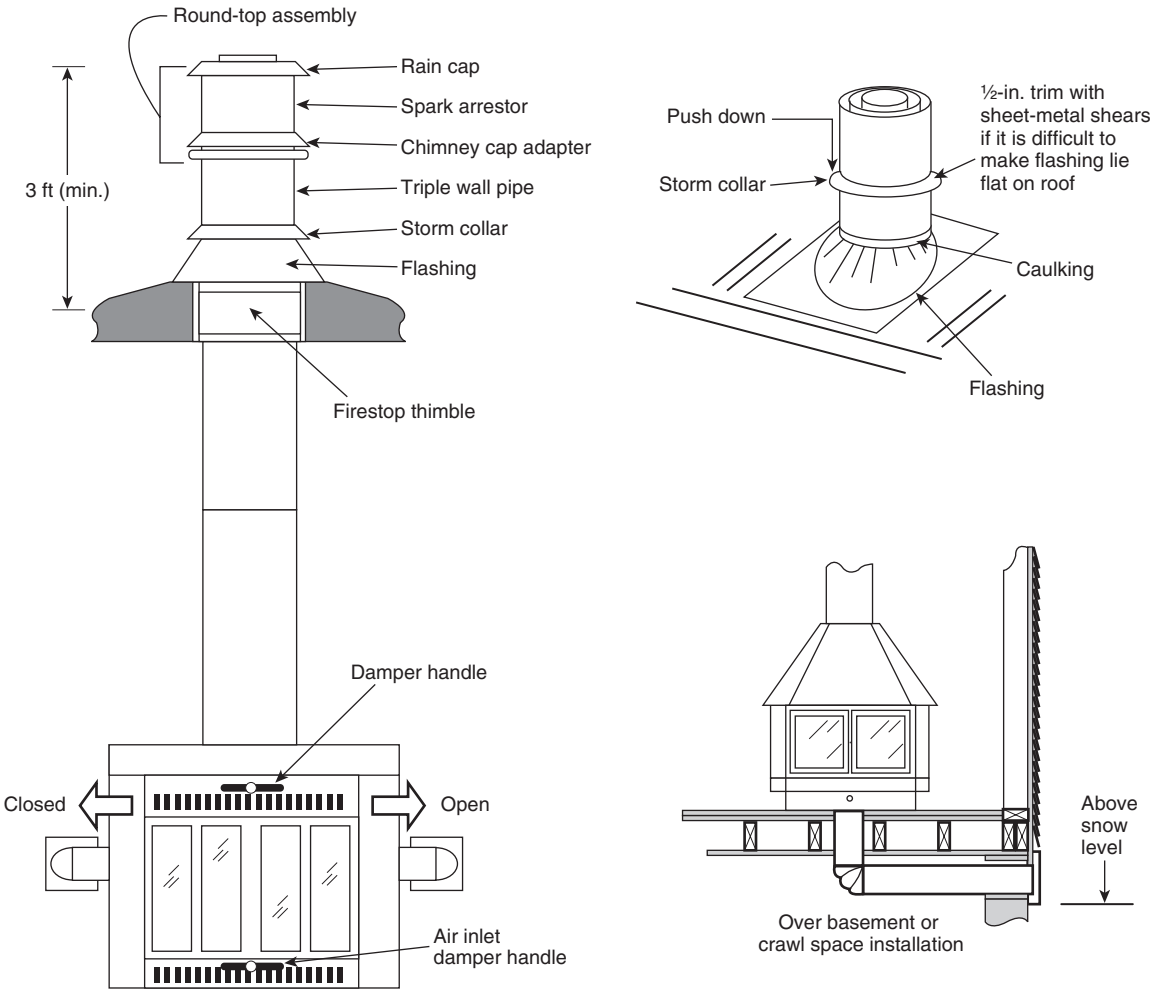

Note: For SI units, 1 in. = 25.4 mm, 1 ft = 0.3048 m.

FIGURE 9.3.2 Installation of Fireplace or Wood Stove Chimney.

Chapter 10 Utility System Connection and Testing

10.1 Proper Procedures.

10.1.1 The authority having jurisdiction shall be consulted before connecting the manufactured home to any utilities.

10.1.2 Where required, only qualified personnel familiar with local codes shall be permitted to make utility site connections and conduct tests at the manufactured home site.

10.1.3 In flood hazard areas, see Chapter 12.

10.2 Water Supply.

10.2.1 Maximum Supply Pressure and Reduction. When the local water supply pressure exceeds 80 psi (0.6 MPa) to the manufactured home, a pressure-reducing valve, acceptable to the AHJ, of a bypass type shall be installed.

10.2.2 Connection Procedures.

10.2.2.1 Mandatory Shutoff Valve.

10.2.2.1.1 An accessible shutoff valve shall be installed between the water supply and the inlet, in a manner acceptable to the AHJ, as shown in Figure 10.2.2.1.1.

10.2.2.1.2 The water riser for the shutoff valve connection shall be permitted to be located underneath or adjacent to the home.

10.2.2.1.3 The shutoff valve shall be a full-flow gate or ball valve or a valve acceptable to the AHJ.

10.2.2.2 Crossovers.

10.2.2.2.1 Multisection homes with plumbing in both sections shall require water-line crossover connections, as shown in Figure 10.2.2.2.1.

10.2.2.2.2 The shipping caps shall be removed from the water lines, and the crossover connectors provided with the home shall be installed.

10.2.2.2.3 If freezing could occur, the water connectors shall be wrapped with insulation.

--`,,,```-`-`,,`,,`,`,,`---
Copyright National Fire Protection Association
Provided by IHS under license with NFPA
No reproduction or networking permitted without license from IHS
Not for Resale

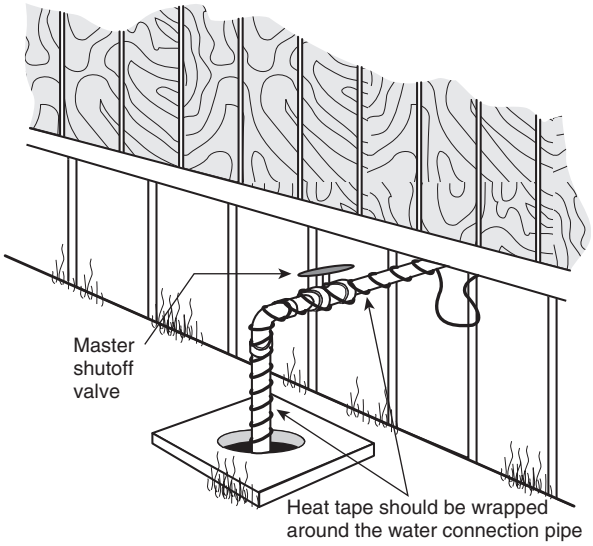

FIGURE 10.2.2.1.1 Typical Water Connection.

10.2.3 Freezing Protection.

10.2.3.1 Necessity. In areas subjected to subfreezing temperatures, exposed sections of water supply piping, shutoff valves, pressure reducers, and pipes in water heater compartments with uninsulated doors shall be protected from freezing using a method acceptable to the AHJ.

10.2.3.2* Use of Pipe Heating Cable. Only pipe heating cable listed for manufactured home use shall be permitted to be used and shall be installed in accordance with the manufacturer's installation instructions.

10.2.4 Testing Procedures.

10.2.4.1 The water system shall be rechecked for leaks at the installation site.

10.2.4.2 The test shall be made by subjecting the system to air or water at 100 psi (0.7 MPa) for 15 minutes without loss of pressure.

10.2.5 Fire Sprinkler Systems. Fire sprinkler systems, if provided, shall have a water supply system that complies with NFPA 13D, *Standard for the Installation of Sprinkler Systems in One- and Two-Family Dwellings and Manufactured Homes.*

10.3 Drainage System.

10.3.1 Assembly and Support. If portions of the drainage system were shipped loose, they shall be reinstalled in accordance with the manufacturer's installation instructions. *(See Figure 10.3.1.)*

10.3.2 Proper Slopes. Drains shall be installed in accordance with 10.3.2.1 or 10.3.2.2.

10.3.2.1 Drain lines shall slope at least ¼ in./ft (19.7 mm/m) unless otherwise noted on the schematic diagram, as shown in Figure 10.3.2.1, or in a manner acceptable to the AHJ.

10.3.2.2 A ⅛ in./ft (9.8 mm/m) fall per foot shall be permitted when a clean-out is installed at the upper end of the run.

10.3.3 Connector Sizes. The main drain line shall be connected to the site's sewer hookup, using an approved elastomer coupler, as shown in Figure 10.3.3, or in a manner acceptable to the AHJ.

10.3.4 Crossovers. Drainage line crossovers in multisection homes shall be connected in accordance with the manufacturer's installation instructions.

10.3.5 Testing Procedures.

10.3.5.1 The drainage system shall be rechecked for leaks after installation at the site.

10.3.5.2 This test shall be accomplished by capping the drain line, filling it with water, and holding it 15 minutes.

10.4 Gas Supply.

10.4.1 Conversion of Gas Appliances. A service person acceptable to the AHJ shall convert the appliance from one type of gas to another, following the instructions provided by the manufacturer of each appliance.

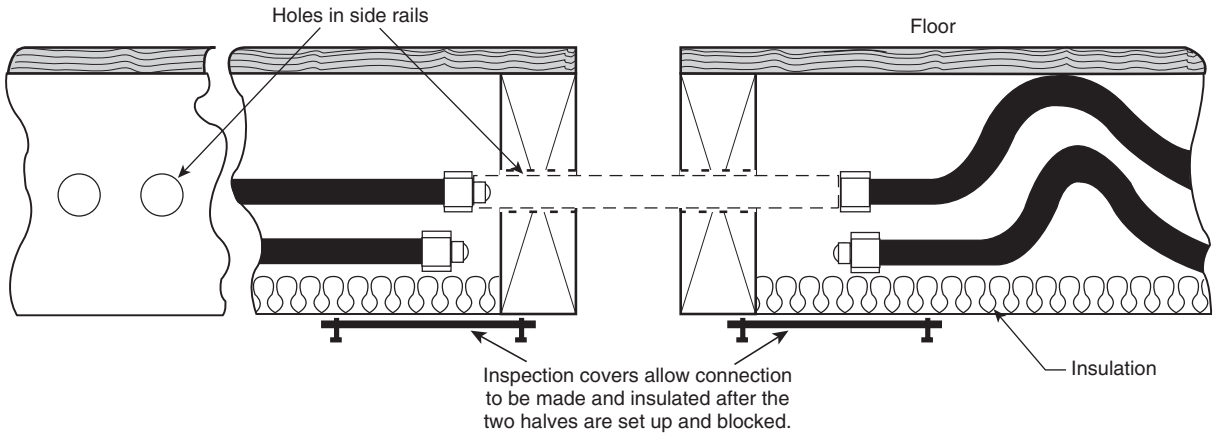

Note: If freezing conditions exist, wrap water connector with insulation. Use water connectors supplied by manufacturer, where applicable.

FIGURE 10.2.2.2.1 Typical Water-Line Crossover Connection.

Copyright National Fire Protection Association
Provided by IHS under license with NFPA
No reproduction or networking permitted without license from IHS
Not for Resale

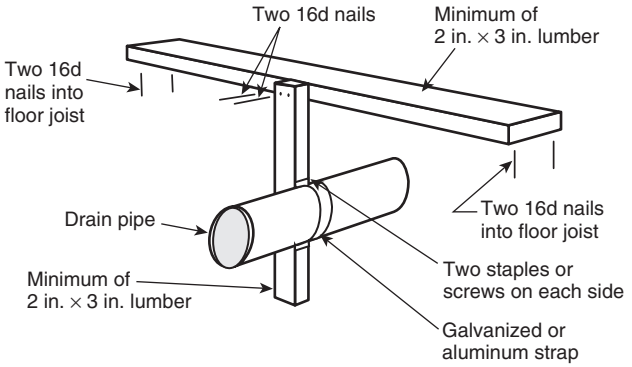

Note: For SI units, 1 in. = 25.4 mm.

FIGURE 10.3.1 Drain Pipe Installation.

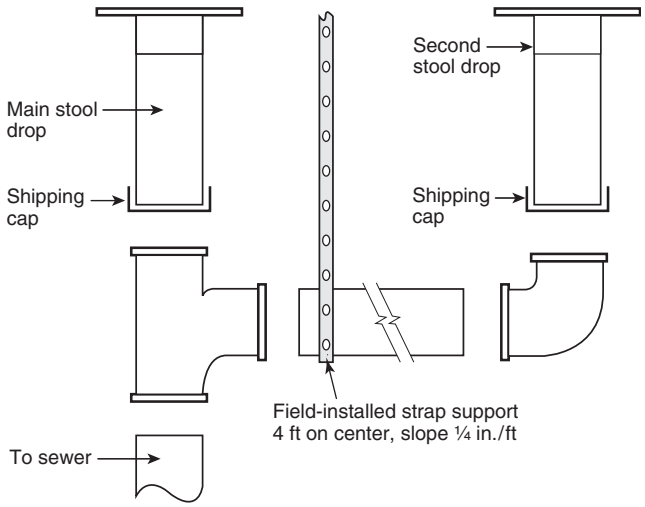

Note: For SI units, 1 ft = 0.3048 m, 1 in. = 25.4 mm.

FIGURE 10.3.2.1 Drain Pipe Slope and Connections.

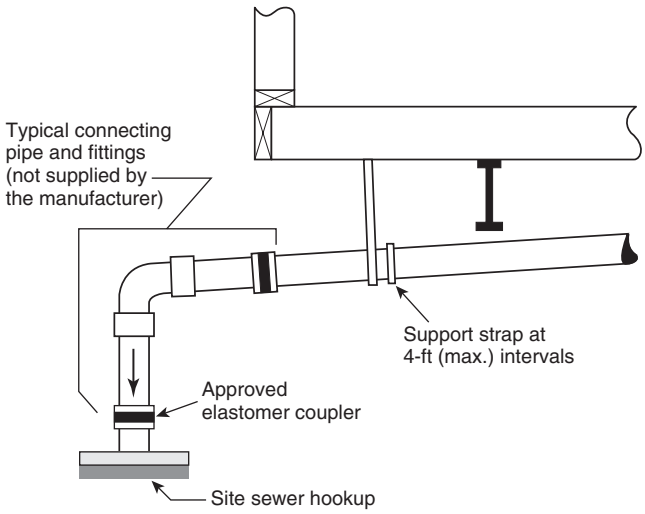

Notes:
(1) Fittings in the drainage system that are subject to freezing, such as P-traps in the floor, are protected with insulation by the manufacturer. Insulation must be replaced if it is removed for access to the P-trap.
(2) For SI units, 1 ft = 0.3048 m.

FIGURE 10.3.3 Connection to Site Sewer.

10.4.2* Orifices and Regulators. Before making any connections to the site supply, the inlet orifices of all gas-burning appliances shall be checked to ensure they are correctly set up for the type of gas to be supplied.

10.4.3* Proper Supply Pressure. The gas piping system in the home shall have been designed for a pressure that is at least 10 in. [5.8 oz or 0.36 psi (2.54 kPa)] and not more than 14 in. of water column [8 oz or 0.5 psi (3.5 kPa)]. If gas from any supply source exceeds, or could exceed, this pressure, a regulator shall be required to be installed.

10.4.4* Crossovers.

10.4.4.1 All crossovers and fittings shall be listed for exterior use and be of the same size as the main unit pipe.

10.4.4.2 Tools shall not be used to connect or remove the flexible connector quick-disconnect.

10.4.5 Testing Procedures. The gas system shall be retested for leaks at the installation site by personnel acceptable to the AHJ *(see 10.4.3)*.

10.4.6* Connection Procedures. Gas burning–appliance vents shall be inspected to ensure that they have been connected to the appliance and that roof jacks are installed and have not come loose during transit.

10.4.7 Gas Appliance Startup Procedures.

10.4.7.1* One at a time, equipment shutoff valves shall be opened, pilot lights shall be lit, and burners shall be adjusted in accordance with each appliance manufacturer's instructions.

10.4.7.2 The operation of the furnace and water heater thermostats shall be checked and then set to the desired temperatures.

10.5 Heating Oil Systems.

10.5.1 Homes equipped with oil burning furnaces shall have their oil supply tankage and piping installed on site.

Copyright National Fire Protection Association
Provided by IHS under license with NFPA
No reproduction or networking permitted without license from IHS
Not for Resale

10.5.2 The oil burning furnace manufacturer's instructions shall be consulted for pipe size and installation procedures.

10.5.3 All oil storage tanks and pipe installations shall meet all applicable local regulations and shall be required to be made only by experienced personnel acceptable to the AHJ.

10.5.4 Tank Installation Requirements.

10.5.4.1 Unless the home is installed in a community with a centralized oil distribution system, an oil storage tank shall be installed outside the home.

10.5.4.2 The tank shall be located where it is accessible to service and supply and safe from fire and other hazards.

10.5.4.3 In flood hazard areas, see Chapter 12.

10.5.5 Leak Test Procedure.

10.5.5.1 Before the system is operated, it shall be checked for leaks in the tank and supply piping.

10.5.5.2 The tank shall be filled to capacity with fuel, and all joints in the system shall be examined for leakage.

10.6* Electricity. A power supply shall be available at the site.

10.6.1* Description and Rating of House Wiring. The home shall be designed for connection to an electrical wiring system rated at 120/240 volts ac.

10.6.2 Electrical Equipment/Installations. All electrical equipment and installations shall be designed, constructed, and installed in accordance with the applicable provisions of NFPA 70, *National Electrical Code*, 24 CFR 3280 (MHCSS); or the AHJ, as applicable.

10.6.3 Testing.

10.6.3.1 Each manufactured home shall be subjected to the following tests:

(1) An electrical continuity test to ensure that metallic parts are properly bonded.
(2) An operational test of all devices and utilization equipment except water heaters, electric ranges, electric furnaces, dishwashers, clothes washers/dryers, and portable appliances to demonstrate that they are connected and in working order.

10.6.3.2 Visual verification or other electrical polarity checks shall be used to determine that connections have been made in accordance with the applicable provisions of NFPA 70, *National Electrical Code*, 24 CFR 3280 (MHCSS); or the AHJ, as applicable.

Chapter 11 Life Safety Features

11.1 Smoke Alarms. Manufacturers must provide installers with instructions on how to inspect and retest each alarm during installation of the home and provide homeowners with operating and testing information from the alarm manufacturer.

11.2 Fire Separation Distances. Fire separation distances shall comply with local rules or regulations. In their absence, *NFPA 5000, Building Construction and Safety Code*, shall apply.

Chapter 12 Installation in Flood Hazard Areas

12.1* General.

12.1.1 Special Techniques Required. Special elevations and anchoring techniques shall be required when locating a home in a flood hazard area.

12.1.1.1 Methods and Practices. Manufactured homes shall be installed using methods and practices that minimize flood damage during the design flood.

12.1.1.2* Materials. Foundation, anchoring, and other installation components at or below the design flood elevation shall be flood damage resistant.

12.1.1.3* Foundation and Anchoring. Manufactured homes shall be securely attached to a foundation system to resist flotation, collapse, and permanent lateral movement during the design flood.

12.1.1.4 Elevation. Manufactured homes shall be elevated in accordance with Section 12.2.

12.1.1.5 Multiple Flood Hazard Zones. For homes that lie in more than one flood hazard zone, the entire installation shall be designed and constructed to meet the most restrictive of the elevation, foundation, and other flood requirements.

12.1.1.6 Floodways. Installations in floodways shall not be permitted unless it has been demonstrated through hydrologic and hydraulic analyses performed in accordance with standard engineering practice that proposed installations do not result in any increase in flood levels within the community during the occurrence of the base flood discharge.

Exception: Where FEMA has identified base flood elevations but has not identified a floodway, a home installation shall be permitted, provided it is demonstrated that the cumulative effect of the proposed installation, when combined with all other existing and anticipated development, will not increase the water surface elevation of the base flood more than 1 ft (0.3 m) at any point within the community.

12.1.2* Consultation with AHJ and Registered Professionals. The AHJ shall be consulted to assure that the home installation conforms to applicable federal, state, and local codes and regulations. A registered professional authorized by law to obtain and certify elevation information shall be consulted in order to meet the requirements of 12.5.1 and 12.5.2. A registered professional engineer or architect shall be consulted in order to meet the requirements of 12.5.3, 12.5.4, and 12.5.5.

12.2 Lowest Floor Elevation.

12.2.1 Installations in New Manufactured Home Parks, in Expansions to Existing Manufactured Home Parks, or Outside Existing Manufactured Home Parks.

12.2.1.1 Flood Hazard Areas Classified as V Zones. Homes shall be installed such that the bottom of the lowest horizontal supporting member of the lowest floor is at or above the design flood elevation. Foundations and anchoring shall comply with 12.3.1 and 12.3.2.1.

12.2.1.2 Flood Hazard Areas Classified as A Zones. Homes shall be installed such that the bottom of the longitudinal chassis frame beams are at or above the design flood elevation. Foundations and anchoring shall comply with 12.3.1 and 12.3.2.2.

12.2.2* Installations in Existing Manufactured Home Parks.

12.2.2.1 New, replacement, and substantially improved homes shall be installed in accordance with one of the following:

(1) With the bottom of the chassis frame beam no less than 36 in. (0.9 m) in height above grade
(2) In conformance with the elevation requirements of 12.2.1

Copyright National Fire Protection Association
Provided by IHS under license with NFPA
No reproduction or networking permitted without license from IHS
Not for Resale

12.2.2.2 Foundations and anchoring shall comply with 12.3.1 and 12.3.3.

Exception: Replacement or repair of a substantially damaged (by flood) manufactured home in an existing park must be elevated with the lowest floor at or above the design flood elevation, as specified in 12.2.1.

12.2.3 Lowest Floor Inspection and Elevation Certification. All installations shall be subject to the inspection and elevation certification requirements in 12.5.1 and 12.5.2.

12.3 Foundations and Anchoring.

12.3.1 Design Flood Loads and Conditions. Manufactured home foundations and anchoring systems shall resist flotation, collapse, and permanent lateral movement, including the effects of scour and erosion, during the design flood. Design flood loads shall be determined using Section 5.3 of ASCE 7, *Minimum Design Loads for Buildings and Other Structures*. These requirements shall be in addition to applicable state and local anchoring requirements for resisting wind loads.

12.3.2 Installations in New Manufactured Home Parks, in Expansions to Existing Manufactured Home Parks, or Outside Existing Manufactured Home Parks.

12.3.2.1 Flood Hazard Areas Classified as V Zones. Homes shall be installed on a pile or column foundation that is capable of resisting the simultaneous effects of flood and wind and meeting the requirements of 12.3.1. Use of fill for structural support shall be prohibited. The foundation and anchoring shall be subject to the certification requirements of 12.5.3.

12.3.2.2 Flood Hazard Areas Classified as A Zones. Homes shall be installed on a foundation that is capable of meeting the requirements of 12.3.1. If the foundation is composed of solid walls and forms an enclosure below the home, the walls must be equipped with flood openings in compliance with 12.4.2.2.

12.3.3 Installations in Existing Manufactured Home Parks.

12.3.3.1 Flood Hazard Areas Classified as V Zones. Support by reinforced piers or other foundation elements of at least equivalent strength, which are no less than 36 in. (0.9 m) in height above grade, shall be permitted for installations in an existing manufactured home park, provided the foundation is capable of resisting lateral flood loads in accordance with 12.3.1.

Exception: Replacement or repair of a substantially damaged (by flood) manufactured home in an existing park must be elevated on a pile or column foundation with its lowest floor at or above the design flood elevation, in compliance with 12.2.1.1 and 12.3.2.1.

12.3.3.2 Flood Hazard Areas Classified as A Zones. Support by reinforced piers or other foundation elements of at least equivalent strength, which are no less than 36 in. (0.9 m) in height above grade, shall be permitted for installations in an existing manufactured home park, provided the foundation is capable of resisting lateral flood loads in accordance with 12.3.1.

Exception: Replacement or repair of a substantially damaged (by flood) manufactured home in an existing park must be elevated on a foundation to a height at or above the design flood elevation, in compliance with 12.2.1.2 and 12.3.2.2.

12.4 Installation Procedures.

12.4.1 Use of Fill. Fill shall be permitted to be used to provide structural support to an A zone home installation. Any such fill shall be compacted, in accordance with 5.5.1, and protected against scour and erosion during the design flood event. Fill shall not be used to provide structural support to a V zone home installation.

12.4.2 Obstructions and Enclosures Below the Design Flood Elevation.

12.4.2.1 Flood Hazard Areas Classified as V Zones. The installation shall have the space below the home's chassis frame beam either free of obstructions or constructed with non-supporting breakaway walls, open wood latticework, insect screening, or skirting that will collapse under wind and water loads without causing collapse, displacement, or other structural damage to the elevated home or supporting foundation system. Breakaway walls shall be subject to the certification requirements of 12.5.4.

12.4.2.2 Flood Hazard Areas Classified as A Zones.

12.4.2.2.1 Solid walls forming enclosed areas below the lowest floor shall be equipped with flood openings that permit the automatic entry and exit of floodwaters. The following types of flood openings shall be permitted:

(1) Flood openings that comply with the requirements of 2.6.1.1 of SEI/ASCE 24, *Flood Resistant Design and Construction*. The certification in 12.5.5 shall not be required.
(2) Flood openings that comply with the requirements of 2.6.1.2 of SEI/ASCE 24. The certification in 12.5.5 shall be required.

12.4.2.2.2 Installation of skirting shall not trigger the requirement for flood openings, provided the skirting meets the following conditions:

(1) Does not provide structural support to the home or its foundation
(2) Will collapse under wind and water loads less than the base flood event, without causing structural damage to the home or foundation

12.5 Post-Installation Considerations.

12.5.1 Lowest Floor Inspection. For manufactured homes installed on a manufactured home site located wholly or partly in a flood hazard area, a lowest floor inspection and certification of the elevation of the floor shall be required.

12.5.2* Elevation Certification. Certification of the lowest floor reference (*see 3.3.17*) shall be required for new, replacement, and substantially improved homes in all flood hazard areas. An elevation certificate specified by the AHJ shall be completed by a licensed or registered professional authorized by law to certify elevation information.

12.5.2.1 The certificate shall contain the following:

(1) The bottom of the lowest horizontal supporting member elevation (in V zones) or the elevation of the bottom of the chassis frame beam (in A zones)
(2) The lowest elevation of machinery and equipment servicing the home
(3) Adjacent grade elevations
(4) Flood opening elevation information

12.5.2.2 The certificate shall be submitted to the AHJ. Elevations shown on the certificate shall be referenced to the datum shown on the jurisdiction's flood hazard map.

12.5.3 V Zone Certification. A registered professional engineer or architect shall certify the following:

(1) The foundation and anchorage design and methods of construction to be used are in accordance with accepted standards of practice to meet the loading and stability requirements of 12.3.1 or 12.3.2.1.

Copyright National Fire Protection Association
Provided by IHS under license with NFPA
No reproduction or networking permitted without license from IHS
Not for Resale

(2) The lowest floor elevation meets the requirements of 12.2.1.1 or 12.2.2.

12.5.4 Breakaway Wall Certification. Breakaway walls below the design flood elevation that are designed to fail at loads greater than 20 psf (0.96 kN/m^2) acting perpendicular to the wall shall be certified by a registered professional engineer or architect. Such design certification shall include the following:

(1) The breakaway wall is designed to collapse from a flood load less than that which will occur during the base flood.
(2) The elevated portion of the structure and the supporting foundation system shall resist collapse, displacement, or other structural damage due to the effects of base flood loads and load combinations.

12.5.5 Flood Opening Certification. For enclosed areas below the design flood elevation not meeting the flood opening requirements of 2.6.1.1 of SEI/ASCE 24, *Flood Resistant Design and Construction,* a registered professional engineer or architect shall prepare a certification that the flood openings will allow for the automatic entry and exit of floodwaters, will allow the equalization of hydrostatic forces, and will meet the requirements of 2.6.1.2 of SEI/ASCE 24.

12.6 Preparation of Appliances.

12.6.1 Outside Appliances. Appliances installed on the manufactured home site shall be anchored and shall be elevated to or above the bottom of the chassis frame beam.

12.6.2 Air Inlets and Outlets. Air inlets and outlets shall be located at or above the bottom of the chassis frame beam.

Exception: Clothes dryer outlets below the bottom of the chassis frame beam.

12.7 Utility Systems.

12.7.1 In flood hazard areas, the fuel storage tank shall be anchored and elevated to or above the design flood elevation or anchored and designed to prevent flotation, collapse, or permanent lateral movement during the design flood.

12.7.2* Water, drainage, plumbing, electrical, gas, HVAC, ductwork, and other utilities, machinery, and equipment shall be at or above the elevation of the bottom of the chassis frame beam or, if located below this elevation, shall be flood damage resistant and designed and installed to prevent water from entering or accumulating within the components and to resist flood loads, including the effects of buoyancy.

Exception: This standard shall not prohibit the installation of non-flood-resistant crossover ductwork, main HVAC supply and return ducts connected to the home's duct systems, and clothes dryer ducts below the bottom of the chassis frame beam.

Chapter 13 Seismic Provisions for Prescriptive Design of Support Systems

13.1 Scope. In addition to the other requirements of this standard, support systems for manufactured homes located in seismic design categories D_0, D_1, D_2, and E, and using the prescriptive design method in accordance with 4.5.1.1, shall meet the requirements of this chapter. Alternately, support systems shall be permitted to conform to engineered design methods, in accordance with 4.5.1.2, or equivalency provisions in accordance with 4.5.1.3. The provisions of Chapter 13 are applicable to manufactured homes that conform to the limitations in 13.1.1 through 13.1.6. Support systems for homes not meeting these limitations shall be provided with an engineered design in accordance with 4.5.1.2 or equivalent system in accordance with 4.5.1.3.

13.1.1 The grade slope shall not exceed 1 vertical to 10 horizontal.

13.1.2 The maximum change in grade height on opposite sides of a foundation wall shall not exceed 1 ft (305 mm) for concrete or concrete masonry foundation walls. For wood cripple walls, no change in grade height shall be permitted.

13.1.3 The manufactured home shall not exceed one story.

13.1.4 The width of each manufactured home section shall not be less than 11 ft 4 in. (3450 mm), nor exceed 16 ft (4880 mm), and shall have a minimum chassis beam spacing of 7 ft 10 in. (2390 mm).

13.1.5 The roof slope shall not be less than ½ in./ft (1:24), nor exceed 4.4 in./ft (1:2.72).

13.1.6 The average section dead load of the manufactured home, measured per foot of length, shall not be less than 260 lb/ft (3.79 kN/m), nor exceed 470 lb/ft (6.86 kN/m) for single-section homes. The average multisection dead load of the manufactured home, measured per foot of length, shall not be less than 500 lb/ft (7.30 kN/m), nor exceed 895 lb/ft (13.06 kN/m) for multisection homes.

13.2 Minimum Prescriptive Support System Requirements.

13.2.1 Excavations shall be made to firm, undisturbed bearing soil containing no organic materials or unstable soils. The bottom of footing shall extend to the greater of the following:

(1) 12 in. (300 mm) below the lowest adjacent undisturbed grade level
(2) The footing depth required by Chapter 13
(3) Below the frost line

13.2.2 Both the top and bottom of isolated footings shall be level. Continuous footings shall be level or stepped such that the bottom and top of the footings are level. The maximum rise in a stepped footing shall be 18 in. (457 mm). The minimum run between rises shall be 36 in. (914 mm).

13.3 Prescriptive Pier Support Systems. The provisions of Section 13.3 shall apply to piers located along and attached to the chassis beams and providing both vertical load and lateral force support for a manufactured home.

13.3.1 Pier construction shall be of concrete masonry, not less than 16 in. (406 mm) nominal square in plan and supported on a concrete footing, and shall meet or exceed the requirements of Figure 13.3.1.

13.3.2 The height of piers above lowest adjacent grade shall not vary by more than 2 ft (610 mm), and no pier shall extend to more than 5 ft (1524 mm) above adjacent grade.

13.3.3 The length and width of the pier footing shall not be less than required by Table 13.3.3, based on the applicable allowable stress design soil bearing strength.

13.3.4 All cells of the concrete masonry units shall be solid grouted with grout having a 28-day compressive strength of not less than 2000 psi (13,789 kN/m^2).

13.3.5 Each concrete masonry pier shall be provided with not less than two No. 4 vertical reinforcing bars, located in diagonally opposite corners. The vertical bars shall have standard hooks of not less than 8 in. (203 mm) provided in the concrete footing and shall extend to within 2 in. (51 mm) of the top of the pier. See Figure 13.3.1 for required placement.

--`,,`-`-`,,`,,`,`,,`---

Copyright National Fire Protection Association
Provided by IHS under license with NFPA
No reproduction or networking permitted without license from IHS
Not for Resale

Table 13.3.3 Pier Minimum Square Footing Side Dimension and Depth

Width	Pier Height (ft)*	Pier Spacing Along Chassis (ft)	Allowable Soil Bearing Pressure (psf) 1000	1500	2000
Seismic or 90 mph Wind					
Single	3	4	3'-0″ × 3'-0″ × 16″	—	—
		7	4'-0″ × 4'-0″ × 20″	—	—
		10	4'-6″ × 4'-6″ × 20″	4'-0″ × 4'-0″ × 20″	—
Double	3	4	3'-0″ × 3'-0″ × 16″	2'-6″ × 2'-6″ × 16″	—
		7	3'-6″ × 3'-6″ × 20″	—	—
		10	4'-0″ × 4'-0″ × 20″	—	—
Single	5	4	3'-6″ × 3'-6″ × 20″	—	—
		7	4'-6″ × 4'-6″ × 20″	4'-0″ × 4'-0″ × 20″	—
		10	5'-0″ × 5'-0″ × 20″	4'-6″ × 4'-6″ × 20″	—
Double	5	4	3'-0″ × 3'-0″ × 16″	—	—
		7	3'-6″ × 3'-6″ × 20″	—	—
		10	4'-0″ × 4'-0″ × 20″	—	—
90 mph Wind plus Non-Coastal A-Zone Flood†					
Single	3	4	3'-6″ × 3'-6″ × 20″	—	—
		7	4'-0″ × 4'-0″ × 20″	—	—
		10	4'-6″ × 4'-6″ × 20″	—	—
Double	3	4	3'-0″ × 3'-0″ × 16″	—	—
		7	4'-0″ × 4'-0″ × 20″	—	—
		10	4'-6″ × 4'-6″ × 20″	—	—
Single	5	4	4'-0″ × 4'-0″ × 20″	—	3'-6″ × 3'-6″ × 20″
		7	4'-6″ × 4'-6″ × 20″	—	—
		10	5'-0″ × 5'-0″ × 20″	—	—
Double	5	4	3'-6″ × 3'-6″ × 20″	—	—
		7	4'-0″ × 4'-0″ × 20″	—	—
		10	4'-6″ × 4'-6″ × 20″	—	—
90 mph Wind plus Coastal A-Zone Flood†					
Single	3	4	3'-6″ × 3'-6″ × 20″	—	—
		7	4'-0″ × 4'-0″ × 20″	—	—
		10	4'-6″ × 4'-6″ × 20″	-	—
Double	3	4	3'-6″ × 3'-6″ × 20″	—	—
		7	4'-0″ × 4'-0″ × 20″	—	—
		10	4'-6″ × 4'-6″ × 20″	—	—
Single	5	4	4'-0″ × 4'-0″ × 20″	—	3'-6″ × 3'-6″ × 20″
		7	4'-6″ × 4'-6″ × 20″	—	—
		10	5'-0″ × 5'-0″ × 20″	—	—
Double	5	4	4'-0″ × 4'-0″ × 20″	3'-6″ × 3'-6″ × 20″	—
		7	4'-6″ × 4'-6″ × 20″	—	4'-0″ × 4'-0″ × 20″
		10	5'-0″ × 5'-0″ × 20″	4'-6″ × 4'-6″ × 20″	—

For SI units, 1 in. = 25.4 mm, 1 ft = 305 mm, 1 psf = 47.9 N/m^2.

Notes:

(1) Top of concrete footing shall not extend above finished grade. Provide greater footing depth where required to satisfy local frost depth requirements. Circular footing of equal area is permitted, with a minimum diameter equal to 1.13 times the tabulated side dimension.

(2) Increase footing depth or provide erosion protection around piers in flood hazard areas where the maximum predicted scour depth exceeds 16 in. (406 mm).

*Pier height measured from top of grade.

†Flood velocities not greater than 5 ft/sec (1.52 m/sec) with depths not exceeding the elevation of the lowest edge of the longitudinal support frame.

Copyright National Fire Protection Association
Provided by IHS under license with NFPA
No reproduction or networking permitted without license from IHS
Not for Resale

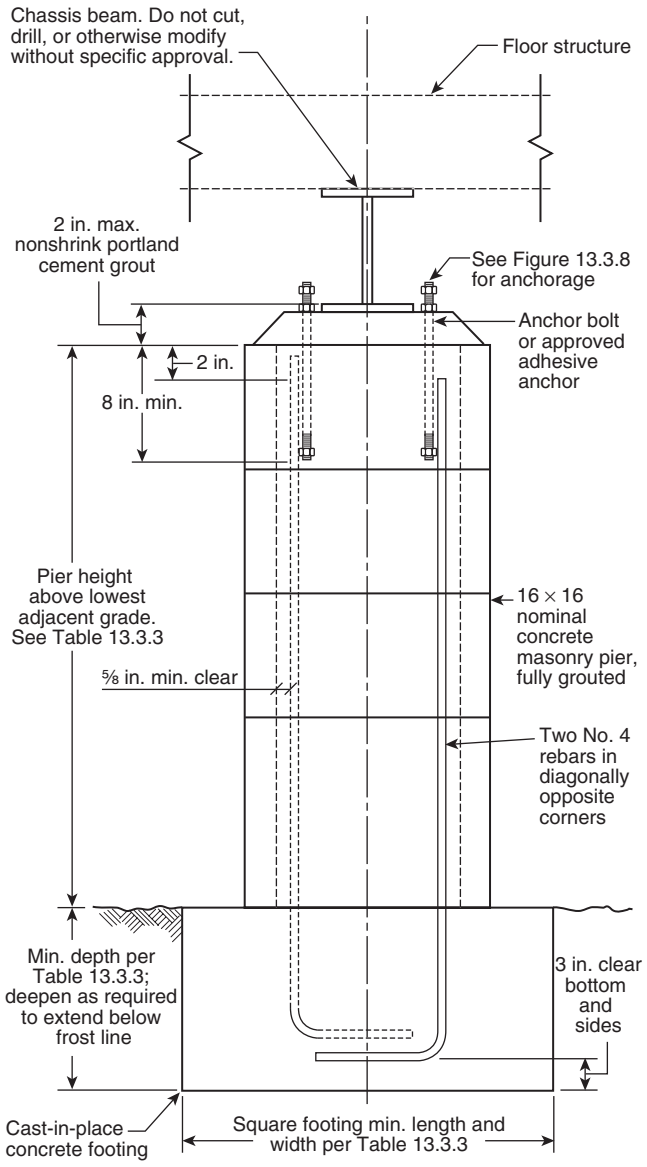

Note: For SI units, 1 in. = 2.54 mm.

FIGURE 13.3.1 Concrete Masonry Pier Construction Requirements.

13.3.6 Anchorage shall be provided between the support system and manufactured home, capable of resisting the greater of the loads and forces specified in NFPA 501, *Standard on Manufactured Housing*; Table 13.3.6 of this standard; or the reactions specified by the home manufacturer. The chassis beam shall not be cut, drilled, or otherwise modified without specific approval of the AHJ and the home manufacturer.

13.3.7 Non-shrink Portland cement grout with a 28-day compressive strength of not less than 3000 psi (20,670 kN/m^2) shall be provided between the chassis beam and the pier, when required to obtain full bearing of the chassis beam. Grout shall be permitted to be dry-packed following home placement. Height of grout shall not exceed 2 in. (51 mm).

Table 13.3.6 Pier to Chassis Seismic/Wind Anchorage Forces

Width	Pier Height (ft)	Maximum Pier Spacing (ft)	Horizontal Seismic/Wind Force Each Pier (lb)	Vertical Seismic/Wind Force Each Pier (lb)*
Single	3	4	320	720
		7	560	1250
		10	800	1790
Double	3	4	290	860
		7	440	1510
		10	600	2150
Single	5	4	350	720
		7	620	1250
		10	880	1790
Double	5	4	340	860
		7	490	1510
		10	650	2150

*Based on 14 ft section width. Multiply by 1.15 for 16 ft section width.

13.3.8 Where anchorage requirements from the home manufacturer are not available, required anchorage shall be permitted to use four ½-in. (12.7 mm) diameter anchor bolts on each pier with steel shims and plates, in accordance with Figure 13.3.8. See Figure 13.3.1 for balance of anchor bolt information.

13.4 Prescriptive Foundation Wall Support Systems. The provisions of Section 13.4 shall apply to foundation walls located at the manufactured home perimeter and providing lateral force support of manufactured homes. Where foundations walls are provided in accordance with Section 13.4, interior support shall be permitted to conform to applicable provisions of Chapter 6.

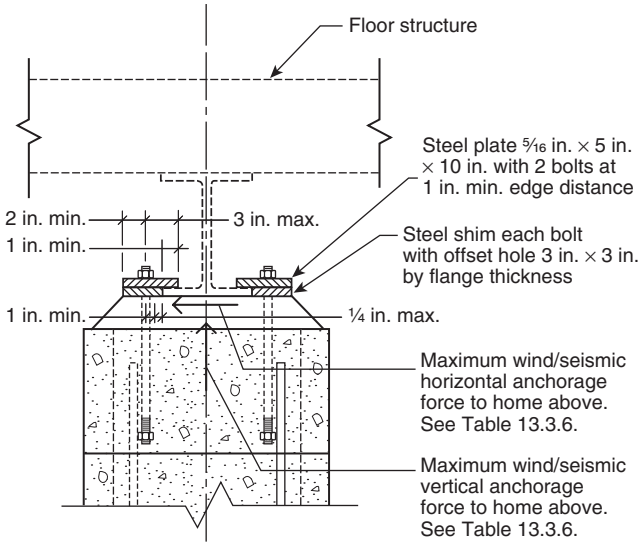

Notes:
(1) For SI units, 1 in. = 2.54 mm.
(2) For remainder of information, see Figure 13.3.1.

FIGURE 13.3.8 Anchorage Requirements for Shims and Plates.

--`,,`-`-`,,`,,`,`,,`---
Copyright National Fire Protection Association
Provided by IHS under license with NFPA
No reproduction or networking permitted without license from IHS
Not for Resale

13.4.1 Foundation stem wall construction shall be of concrete or concrete masonry units supported on a continuous concrete footing, the stem width shall be not less than 6 in. (152 mm) nominal, and construction shall not be less than that designated in Figure 13.4.1(a) and Figure 13.4.1(b).

13.4.2 The height of foundation walls shall not vary by more than 2 ft (610 mm), and no foundation wall shall extend to more than 4 ft (1219 mm) above lowest adjacent grade.

13.4.3 The foundation wall footing shall be continuous.

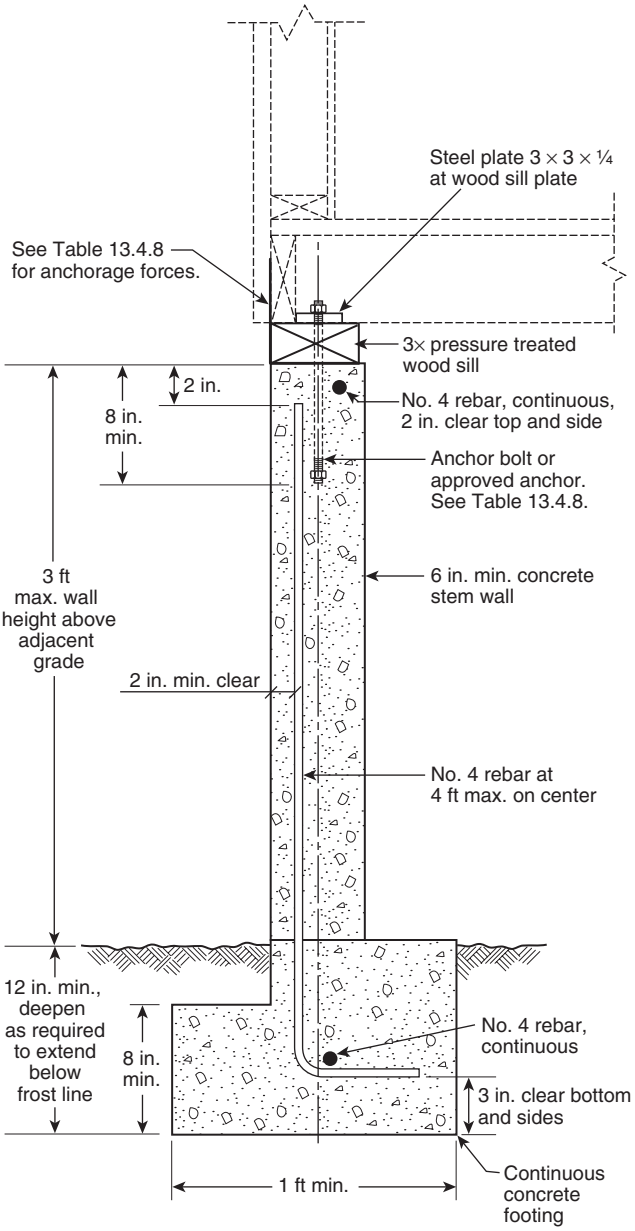

Note: For SI units, 1 in. = 2.54 mm.

FIGURE 13.4.1(a) Concrete Foundation Stem Wall Construction.

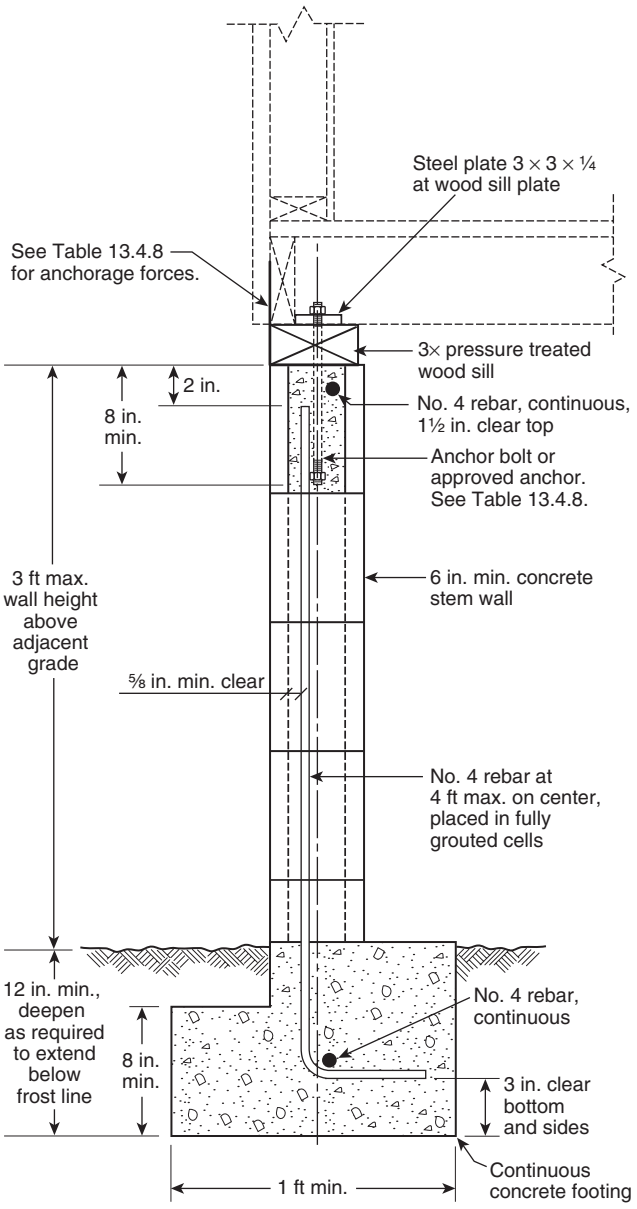

Note: For SI units, 1 in. = 2.54 mm.

FIGURE 13.4.1(b) CMU Foundation Stem Wall Construction.

13.4.4 The foundation stem wall shall be provided in lengths not less than 6 ft (1829 mm), except that foundation vents, with a height not exceeding one third of the stem wall height, shall be permitted to be provided within the 6 ft (1829 mm) length. Crawl space access shall be provided as required by other provisions of this standard.

13.4.5 The concrete masonry units need not be solid grouted; however, grouting shall be provided at vertical cells with reinforcing steel and a continuous bond beam for not less than the top 8 in. (203 mm) of the stem wall. Grout shall have a 28-day compressive strength of not less than 2000 psi (13,789 kN/m^2).

Copyright National Fire Protection Association
Provided by IHS under license with NFPA
No reproduction or networking permitted without license from IHS
Not for Resale

13.4.6 Each concrete or concrete masonry foundation wall shall be provided with not less than No. 4 vertical reinforcing bars at a spacing not exceeding 4 ft (1219 mm), with a standard hook of not less than 8 in. (203 mm) in the footing. See Figure 13.4.1(a) and Figure 13.4.1(b) for required placement. Each foundation shall have not less than one No. 4 continuous in the footing and one No. 4 continuous within 8 in. (203 mm) of the top of the wall. Lap splices for No. 4 bars shall be not less than 24 in. (610 mm) straight and shall provide not less than a 12 in. (305 mm) bend around corners.

13.4.7 Anchorage shall be provided between the support system and manufactured home, capable of resisting the greater of the loads and forces specified in NFPA 501, *Standard on Manufactured Housing*, Table 13.4.7 of this standard; and the reactions specified by the home manufacturer.

Table 13.4.7 Manufactured Home Perimeter to Foundation or Cripple Wall Seismic/Wind Anchorage Forces

Home Width	Wall Location	Horizontal Seismic/Wind Force per Foot Wall (Shear) (lb/ft)	Vertical Seismic/Wind Force per Foot Wall (Uplift) (lb/ft)
Single	End	510	50
	Side	70	120
Double	End	260	50
	Side	140	150

13.4.8 Where anchorage requirements from the home manufacturer are not available, required anchorage shall be permitted to use the anchor bolt and framing plates in accordance with Table 13.4.8. Each anchor bolt shall be provided with a steel plate washer not less than ¼ in. × 3 in. × 3 in. (6.3 mm × 76 mm × 76 mm), with a hole diameter of 11⁄16 in. (17.4 mm) and installed with a standard cut washer. See Figure 13.4.1(a) and Figure 13.4.1(b) for placement.

Table 13.4.8 Manufactured Home Minimum Perimeter to Foundation Wall Seismic/Wind Anchorage

Home Width	Wall Location	Maximum Spacing for ½-in. Anchor Bolt Anchoring Sill to Foundation Wall (in.)	Maximum Spacing for Framing Plate with Shear and Uplift Capacity (in.)*
Single	End	16	12
	Side	48	42
Double	End	32	18
	Side	32	18

*Not less than 18 ga. galvanized plate, fastened to sill and home with not less than six 8d common short nails each.

13.4.9 Foundation crawl-space ventilation and access openings meeting the requirements of 8.8.2 shall be provided in the foundation wall. When located in a flood hazard area, flood openings conforming to SEI/ASCE 24, *Flood Resistant Design and Construction*, Section 2.6.1.1, shall be provided in the foundation wall, or the requirements of SEI/ASCE 24, Section 2.6.1.2, shall be met.

13.5 Prescriptive Wood Cripple Wall Support Systems. The provisions of Section 13.5 shall apply to wood framed cripple walls at the manufactured home perimeter and providing lateral force support of manufactured homes. Where foundation walls are provided in accordance with Section 13.5, interior support shall be permitted to conform to applicable provisions of Chapter 6.

13.5.1 A continuous concrete perimeter footing shall be provided, with a width not less than 12 in. (305 mm). The concrete shall extend not less than 8 in. (203 mm) above the highest adjacent grade. Construction shall not be less than that designated in Figure 13.5.1.

13.5.2 A continuous perimeter cripple wall shall be provided, constructed in accordance with Figure 13.5.1. Transverse end walls shall be fully sheathed with no crawl-space access or other openings. Longitudinal walls shall have fully sheathed sections of not less that 8 ft (2438 mm) in length, and totaling not less than 50 percent of the longitudinal wall length. Required access openings and ventilation openings shall be provided in the longitudinal walls.

13.5.3 Where home length exceeds 60 ft (18.3 m), two interior transverse shear walls with continuous footings shall be added, with spacing between walls not exceeding 30 ft (9.1 m). Access openings shall be provided at the center of transverse interior footings.

13.5.4 The height of the cripple walls shall not exceed 4 ft (1219 mm) above the top of footing.

13.5.5 The concrete footing shall be provided with not less than two continuous No. 4 reinforcing bars. See Figure 13.5.1 for placement. Lap splices for No. 4 bars shall be not less than 24 in. (610 mm) straight and shall provide not less than a 12 in. (305 mm) bend around corners.

13.5.6 Anchorage between the cripple wall sill plate and the concrete footing shall be provided with not less ½-in. (12.7 mm) diameter anchor bolts, starting not more than 8 in. (203 mm) from the end of each foundation sill. Anchor bolts shall be embedded not less than 8 in. (203 mm) into the concrete. Anchor bolt spacing shall not exceed 16 in. (406 mm) on center for end walls of single-wide homes, and 32 in. (813 mm) on center for other walls. Each anchor bolt shall be provided with a steel plate washer not less than ¼ in. × 3 in. × 3 in. (6.3 mm × 76 mm × 76 mm), with a hole diameter of 11⁄16 in. (17.4 mm) and installed with a standard cut washer. See Figure 13.5.1 for placement.

13.5.7 Anchorage shall be provided between the cripple wall and manufactured home, capable of resisting the greater of the loads and forces specified in NFPA 501, *Standard on Manufactured Housing*, Table 13.4.7 of this standard; and the reactions specified by the home manufacturer.

13.5.8 Where anchorage requirements from the home manufacturer are not available, required anchorage between the cripple wall and the manufactured home shall be permitted to use framing plates in accordance with Table 13.4.8.

--`,,```-`-`,,`,,`,`,,`---

Copyright National Fire Protection Association
Provided by IHS under license with NFPA
No reproduction or networking permitted without license from IHS
Not for Resale

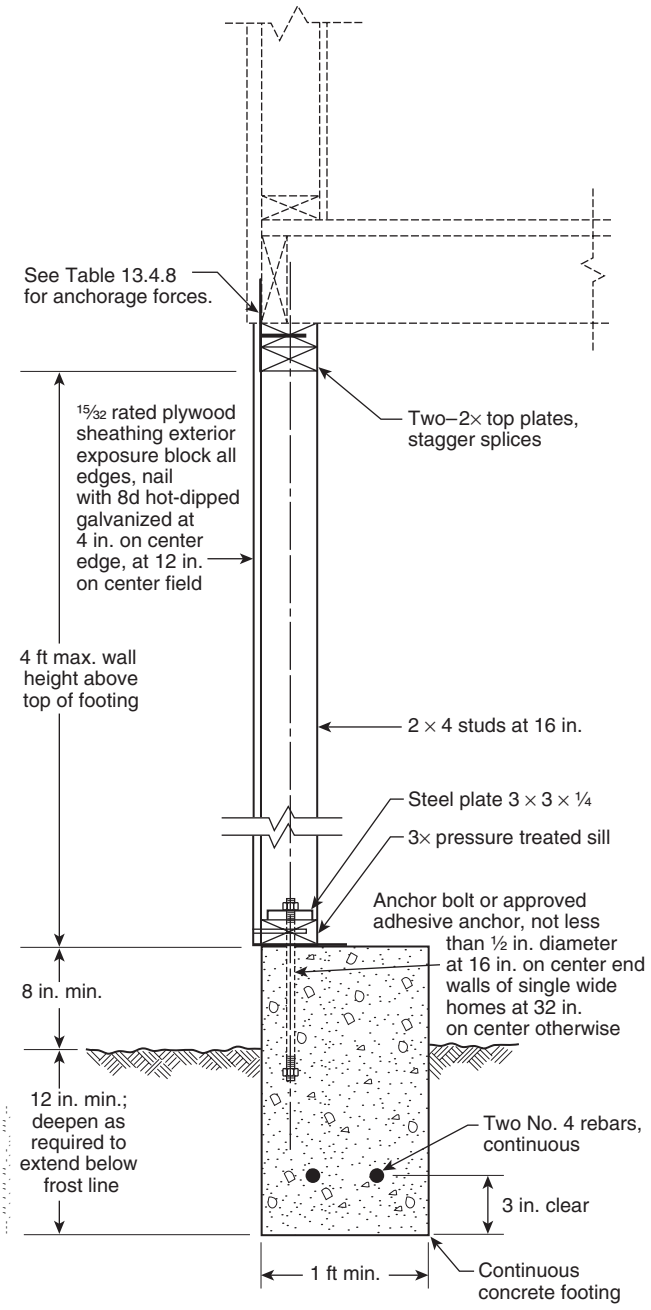

Note: For SI units, 1 in. = 2.54 mm.

FIGURE 13.5.1 Continuous Concrete Perimeter Footing Requirements.

13.5.9 Foundation crawl-space ventilation and access openings meeting the requirements of 8.8.2 shall be provided in the cripple wall. When located in a flood hazard area, flood openings conforming to SEI/ASCE 24, *Flood Resistant Design and Construction*, Section 2.6.1.1 shall be provided in the cripple wall, or the requirements of SEI/ASCE 24, Section 2.6.1.2 shall be met.

Chapter 14 Seismic Installation and Equipment Bracing Requirements

14.1 General. In addition to the other requirements of this standard, installation and equipment bracing in manufactured homes located in seismic design categories D_0, D_1, D_2, and E shall meet the additional requirements of Chapter 14.

14.2 Site-Installed Water Heaters. Site-installed water heaters shall be provided with seismic bracing straps installed in accordance with the manufacturer's recommendations.

14.3 Site-Installed Equipment. Other site-installed equipment weighing more than 100 lb (445 N) shall be anchored to resist horizontal seismic forces. Forces shall be calculated in accordance with ASCE 7, *Minimum Design Loads for Buildings and Other Structures*. Alternately, the horizontal force shall be permitted to be taken as equal to the equipment weight and assumed to act at mid-height of the equipment.

14.4 Utility Attachments. Utility attachments to the manufactured home shall be capable of accommodating the anticipated seismic and wind displacement of the support and anchorage systems.

Annex A Explanatory Material

Annex A is not a part of the requirements of this NFPA document but is included for informational purposes only. This annex contains explanatory material, numbered to correspond with the applicable text paragraphs.

A.1.1 Utilization of this standard by the homeowner and installation crew and use of a registered professional engineer in those unusual circumstances as required by this standard will help ensure the homeowner of a well-built, safe, and affordable home.

This standard contains instructions, including specifications and procedures, for installation of utility connections of a manufactured home. It has been written in an objective manner so that it can be understood by those who are trained in the installation of manufactured homes and who are properly licensed. It discusses the installation of the home from preparation of the site through final inspection. It includes many tables and figures giving important data for proper installation.

A.1.3.3 The federal standards, regulations, and requirements for manufactured housing, as authorized by 42 U.S.C. 5401 et seq., are as follows:

(1) 24 CFR 3280, *Manufactured Home Construction and Safety Standards*
(2) 24 CFR 3282, *Manufactured Home Procedural and Enforcement Regulations*

A.1.3.6.1 If a home site lies within a flood hazard area as shown on the AHJ's map, the map and supporting studies adopted by the AHJ shall be referenced to determine the flood hazard zone and design flood elevation at the site. Flood hazard maps adopted by the AHJ can include a flood insurance rate map (FIRM), flood boundary and floodway map (FBFM), or flood hazard boundary map (FHBM). The National Flood Insurance Program (NFIP) Community Status Book can be consulted to determine the date of the adopted map, and it is available at http://www.fema.gov/fema/csb.shtm. NFIP maps and studies can be viewed online at FEMA's Map Service Center (http://store.msc.fema.gov).

Copyright National Fire Protection Association
Provided by IHS under license with NFPA
No reproduction or networking permitted without license from IHS
Not for Resale

A.3.2.1 Approved. The National Fire Protection Association does not approve, inspect, or certify any installations, procedures, equipment, or materials; nor does it approve or evaluate testing laboratories. In determining the acceptability of installations, procedures, equipment, or materials, the authority having jurisdiction may base acceptance on compliance with NFPA or other appropriate standards. In the absence of such standards, said authority may require evidence of proper installation, procedure, or use. The authority having jurisdiction may also refer to the listings or labeling practices of an organization that is concerned with product evaluations and is thus in a position to determine compliance with appropriate standards for the current production of listed items.

A.3.2.2 Authority Having Jurisdiction (AHJ). The phrase "authority having jurisdiction," or its acronym AHJ, is used in NFPA documents in a broad manner, since jurisdictions and approval agencies vary, as do their responsibilities. Where public safety is primary, the authority having jurisdiction may be a federal, state, local, or other regional department or individual such as a fire chief; fire marshal; chief of a fire prevention bureau, labor department, or health department; building official; electrical inspector; or others having statutory authority. For insurance purposes, an insurance inspection department, rating bureau, or other insurance company representative may be the authority having jurisdiction. In many circumstances, the property owner or his or her designated agent assumes the role of the authority having jurisdiction; at government installations, the commanding officer or departmental official may be the authority having jurisdiction.

A.3.2.4 Listed. The means for identifying listed equipment may vary for each organization concerned with product evaluation; some organizations do not recognize equipment as listed unless it is also labeled. The authority having jurisdiction should utilize the system employed by the listing organization to identify a listed product.

A.3.3.6 Crossovers. Crossover connections include heat ducting, electrical circuits, water pipes, drain plumbing, and gas lines.

A.3.3.10 Flood Hazard Area. Most communities will adopt the flood insurance rate map and designate the special flood hazard area as the area subject to floodplain management regulations. However, in some cases, a community will designate a larger area as being subject to floodplain management regulations. The term *flood hazard area* used in this standard includes both. The special flood hazard area is the area with a 1 percent or greater chance of flooding in any year and is commonly divided into V zones and A zones. V zones identify those coastal areas that are subject to damaging waves and erosion — they include zones V, VE, VO, and V1-30. A zones identify those areas that are subject to inundation by floodwaters but are not generally subject to waves and erosion — they include zones A, AE, AH, AO, AR, A99, and A1-30.

A.3.3.13 Foundation Wall. Types of foundation walls include but are not limited to concrete, concrete masonry, and pressure treated wood.

A.3.3.17 Lowest Floor. *(See Figure A.3.3.17).* The *lowest floor* is used as a reference to determine how high a manufactured home must be elevated in a flood hazard area and is used to determine flood insurance premiums. In A zones, the lowest floor will be the bottom of the chassis frame beam, regardless of the foundation and support system used. In V zones, the lowest floor reference is the bottom of the lowest horizontal member, which will vary, depending on the foundation and support system used: it will be the bottom of the chassis frame beam, if the chassis frame beam is attached directly to piers or piles, or it will be the bottom of any horizontal structural beam or member that is attached to piers or piles and that directly supports the chassis frame beam.

A.3.3.19 Manufactured Home Accessory Building or Structure. Examples are awnings, garages, storage structures, carports, fences, windbreaks, or porches.

A.3.3.23 Pier. Types of piers include, but are not limited to, the following: (1) manufactured steel stands; (2) pressure-treated wood; (3) manufactured concrete stands; and (4) concrete blocks.

A.4.2 Alterations can include such items as modifying the electrical, plumbing, or heating or cooling systems; adding a room, carport, or garage; or making major repairs such as replacing a roof.

A.4.3 Each manufactured home bears a data plate affixed in a permanent manner near the electrical panel or other readily accessible and visible location. Data plates can be found in locations such as a master bedroom closet, a kitchen cabinet door, or under a sink. The data plate states the home's structural, roof load, thermal, and wind design. Specific information about the manufacturer, unit serial number, date of manufacture, and required information is included.

A.5.6.1 Table 5.6.1 is an abridged extract from *NFPA 5000, Building Construction and Safety Code*, Table 36.3.4(a).

A.5.7.2 Where the site is sloped toward the foundation, it is important to provide drainage swales on the uphill side of the home. Figure A.5.7.2 demonstrates the intent of this requirement.

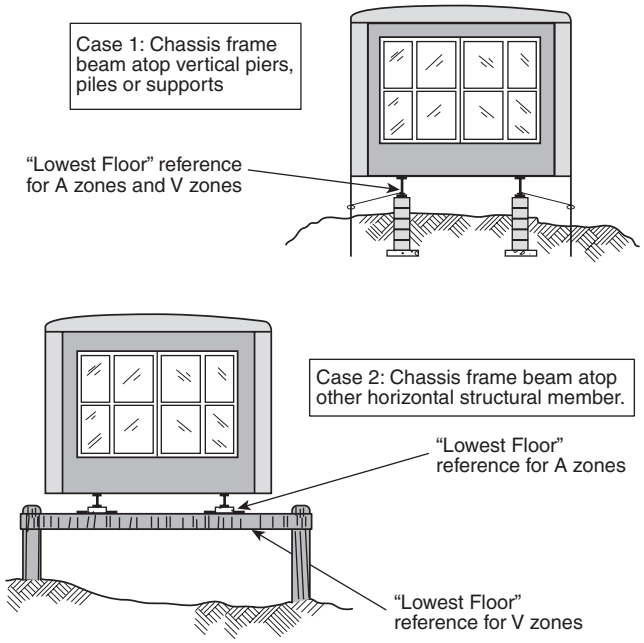

FIGURE A.3.3.17 Lowest Floor Reference for A Zones and V Zones.

--`,,,```-`-`,,`,,`,`,,`---

Copyright National Fire Protection Association
Provided by IHS under license with NFPA
No reproduction or networking permitted without license from IHS
Not for Resale

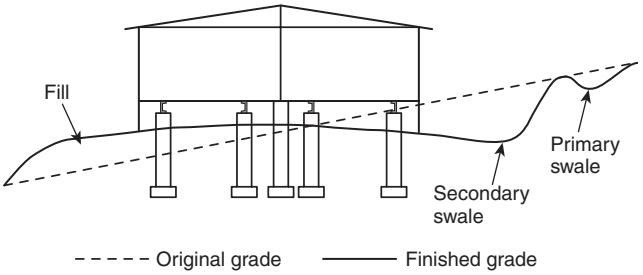

FIGURE A.5.7.2 Sloped Site Construction.

A.6.2.1 Section 6.2 does not consider uplift or lateral loads *(see Chapter 7)*. The support system should resist vertical live and dead loads, including the weight of the home, its furnishings, and temporary roof loading, as well as resisting side loads imposed by wind forces to the foundation below. Consult the data plate for design data describing the roof and wind loads.

A.6.2.2.1 Piers are permitted to be one of the following:

(1) Hollow load-bearing concrete masonry blocks conforming to ASTM C 90, *Standard Specification for Load Bearing Concrete Masonry Units*, Grade N, nominal 8 in. × 8 in. × 16 in (205 mm × 205 mm × 410 mm)
(2) Commercial metal piers available in various heights and base widths listed and stamped with maximum load capacity

A.6.2.3.2.1.1 Figure 6.2.2.1(a) and Figure 6.2.2.1(b) represent some of the typical design arrangements followed by several producers of manufactured homes. It should be noted that, in addition to design examples, guidance is found in these typical arrangements for drainage under the manufactured home, moisture prevention, consideration of termite infestation, and other critical aspects that must be taken into consideration when installing or setting up a manufactured home. The user should consult the producer or dealer of the manufactured home in question for the actual design configuration of support, piers, and so forth to be followed.

A.6.2.4.2 Mortar will not normally be required. However, mortar, reinforcement, and filled cell masonry might be necessary for the piers to resist wind and flood loads.

A.6.2.5.3 Supports might also be necessary for heavy concentrated loads such as heavy pieces of furniture (e.g., pianos, organs, waterbeds).

A.6.2.5.4 See A.6.2.5.3.

A.6.2.5.5 See A.6.2.5.3.

A.6.3.2.3 Useful design guidelines can be found in the references found in Section E.2.

A.6.3.3 Table 6.3.3 addresses only gravity forces.

A.6.3.4 The benefits of footings are twofold: they can resist live and dead load forces in a downward direction to the soil below, and they can resist uplift forces by combining the weight of the pier, concrete, and the soil over the footing. Table 6.3.3 addresses only the download forces.

A.7.1 The home weighs several tons. Temporary support blocking should be used to safeguard workers. During leveling, care should be taken to avoid stressing the home. Excessive and/or nonuniform jacking during the leveling process will cause the home to be racked and twisted and can result in damage to the home.

A.7.2 To level the section, it is suggested that a water level be used to ensure all pier supports are at the same height before lowering the section to its final supported position. Figure A.7.2 shows one suggested method.

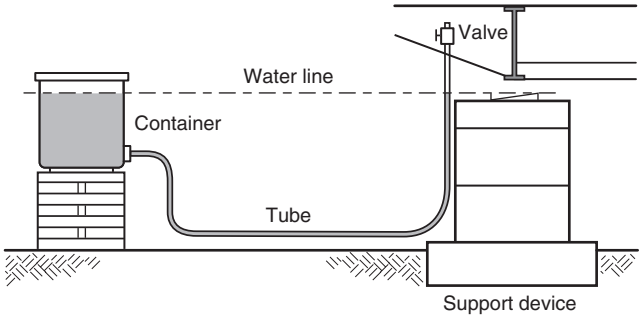

Material to make a water level:

- 5 gal pail with lid
- Plastic tubing — 100 ft × ⅜ in. or ½ in.
- Cork — 1½ in.
- Male barbed fitting — ⅜ in. × ¾ in.
- Steel washer — ⅞ in.
- Nut — ¾ in.
- Female barbed fitting — ⅜ in. × ½ in.
- Male valve — ½ in.
- Pipe sealant
- Food coloring — 8 oz

How to use a water level:

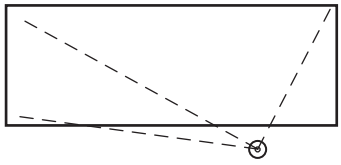

Place at any point around home:

Unroll tubing: Position level where it is to be used. Take care not to have kinks in the tubing, step on it, or lay anything on it.

Check for air bubbles: To remove any, lower valve below bottom of container and open. Close valve when bubbles are out.

Container location: Locate container so valve can reach all areas of the home. Build up container so water line in valve end of tubing is at the predetermined height support at which devices will be set.

Leveling of support device: Secure valve above determined height and open. Adjust device as needed. Close valve and move to next support device.

Level all support devices before lowering home.

Note: For SI units, 1 in. = 25.4 mm.

FIGURE A.7.2 Leveling Section with Water Level.

A.7.3 The following steps are one method of interconnecting multisection homes when the manufacturer's installation instructions are not available:

(1) Provide an air infiltration barrier on the mating edges of the floor, end walls, and ceilings.

Copyright National Fire Protection Association
Provided by IHS under license with NFPA
No reproduction or networking permitted without license from IHS
Not for Resale

(2) Contact the home manufacturer or obtain the manufacturer's installation instructions for joining the transportable sections. If the original manufacturer's method of roof and marriage wall closure cannot be determined by examination, such as factory drilled bolt holes or roof lag bolts, then close the roof with 30 gauge × 9 in. (230 mm) wide galvanized steel cap continuing for the length of the home. Fasten this cap with #10 screws or 1 in. × 1¼ in. (25 mm × 32 mm), 16 gauge staples, 6 in. (150 mm) on center each side. Secure end walls and any marriage wall openings with #10 × 6 in. wood screws, at a minimum of 6 in. on center staggered intervals. Fasten the floor with ⅜ in. × 6 in. (9.5 mm × 150 mm) lag screws installed at a maximum of 36 in. (915 mm) on center staggered and at a 45-degree angle. Predrill pilot holes for lag screws with a ¼ in. (6.4 mm) drill (maximum) before installing lag screws.

A.7.5.2 Section 7.5 summarizes and defines the types of normal installations. The pier-and-ground-anchor system, as provided in this standard, is the most common.

The following are types of foundation systems:

(1) *Piers and anchors.* The manufactured home rests on piers of concrete block, formed-in-place concrete, permanent wood, or steel pedestals on permanent wood, crushed stone, or concrete footers. The ground anchors in the soil are angled to the resist straps or embedded in deadmen in the soil. Straps are tied to the frame, with or without over-the-top straps.
(2) *Concrete slab or continuous footings.* The manufactured home rests on a concrete slab or ribbons of concrete. The straps are tied between the frame and the perimeter footers or concrete slab.
(3) *Pile/post system.* The manufactured home rests on piles or posts placed sufficiently deep in the ground to resist all wind, snow, and earthquake forces. Straps fasten the home to the piles or posts or to caps placed thereon.
(4) *Concrete, concrete block, or wood foundation, load-bearing, perimeter walls.* The manufactured home rests on exterior load-bearing walls that sit on concrete or gravel footings. Straps fasten the home to the walls to resist all external forces.

A.7.5.4.2 Design guidelines can be found in HUD Handbook 4930.3, *Permanent Foundations Guide for Manufactured Housing (see E.2.1).*

A.7.7.1 Failure to remove the sheeting can cause condensation to build up in the walls and damage the home.

A.7.7.2 The exterior siding on the front and rear end walls and exposed mating line walls (multisection) might have been shipped loose by the manufacturing facility with the home. The vapor retarder and/or insulation are installed by the home's manufacturing facility.

A.7.7.5 Entry of outside air into the home's floor cavity is one of the most frequent causes of water piping freeze-up. Necessary repairs should be completed regardless of whether skirting is to be installed around the perimeter of the home.

A.8.2 Because hinged roofs, eaves, and vent stacks are usually very heavy, special care must be taken when installing them to avoid personal injury and to avoid structural damage.

A.8.6 For an example of the ventilation options, see Figure A.8.6.

A.8.8.1 Homes with open slatted decking at recessed entries, with open porches, or with decks with skirting in front of, behind, or under the deck-home transition must have adequate drainage to prevent water from draining back under the home.

A.8.8.2.1 Where local codes have minimum ventilation requirements for crawl spaces, the requirements of 8.8.2.1 through 8.8.2.3 apply to homes with skirting and continuous foundations.

A.8.9 Careless installation of telephone and cable television lines can be hazardous. Failure to follow instructions can result in serious personal injury or death. The walls and floors of the home contain electrical circuits, plumbing, and ductwork. Avoid contact with these systems when drilling through and placing cables within these cavities. Only trained professionals should handle such work.

A.9.1 IMPORTANT: Do not let the exhaust system end under the home, where excess moisture or flammable material can accumulate. (Follow the dryer manufacturer's instructions for installing the exhaust system.)

A.9.2 IMPORTANT: Before installing a comfort cooling system, check the home's data plate to ascertain that the home has been designed for the installation of central air conditioning. Only qualified personnel can install a comfort cooling system not provided with the home. Follow the product manufacturer's installation instructions and conform to all local codes.

A.9.2.1.1 CAUTION: Oversized air conditioning equipment can lead to poor overall performance of the home's cooling system. Do not cut any floor framing when installing return air grille(s).

A.9.2.1.2 IMPORTANT: Electrical circuits within the home might not have been sized for the additional load of non–factory installed air conditioning, and a separate, outside electrical supply might have to be provided.

A.9.3.5 If there are obstructions on the site that extend higher than the home's roof peak and are within 10 ft (3050 mm) of the chimney, the installer might have to provide an additional section of chimney pipe, if required to do so by the authority having jurisdiction.

A.9.3.7 If the added ducts are not supplied, they can be purchased at a hardware store. The fireplace manufacturer's instructions for installing combustion air ducts can be found in the fireplace/stove or with the chimney parts.

A.10.2.3.2 Figure A.10.2.3.2 illustrates the intent of this paragraph.

A.10.4.2 IMPORTANT: Special orifices and regulators are required for specific gases. See the instructions accompanying each gas-burning appliance for modification instructions. Special attention should be given to homes sited at altitudes above 3000 ft (945 m).

A.10.4.3 To operate gas-burning appliances safely and efficiently, do not exceed the design pressure limitations. For natural gas systems, the incoming gas pressure should remain between 6 in. and 8 in. of water column (1.5 kPa and 2 kPa). For LP-Gas systems, the pressure should register between 12 in. and 14 in. of water column (3 kPa and 3.5 kPa).

A.10.4.4 A gas crossover might need to be installed in multisection homes.

A.10.4.6 IMPORTANT: Have the gas system connected to the gas supply by a qualified service person who is familiar with local codes and who is licensed where required, or by a representative of the gas company.

IMPORTANT: Have the gas supply turned on by a qualified service person who is familiar with local codes and who is licensed where required, or by an authorized representative of the gas company.

Copyright National Fire Protection Association
Provided by IHS under license with NFPA
No reproduction or networking permitted without license from IHS
Not for Resale

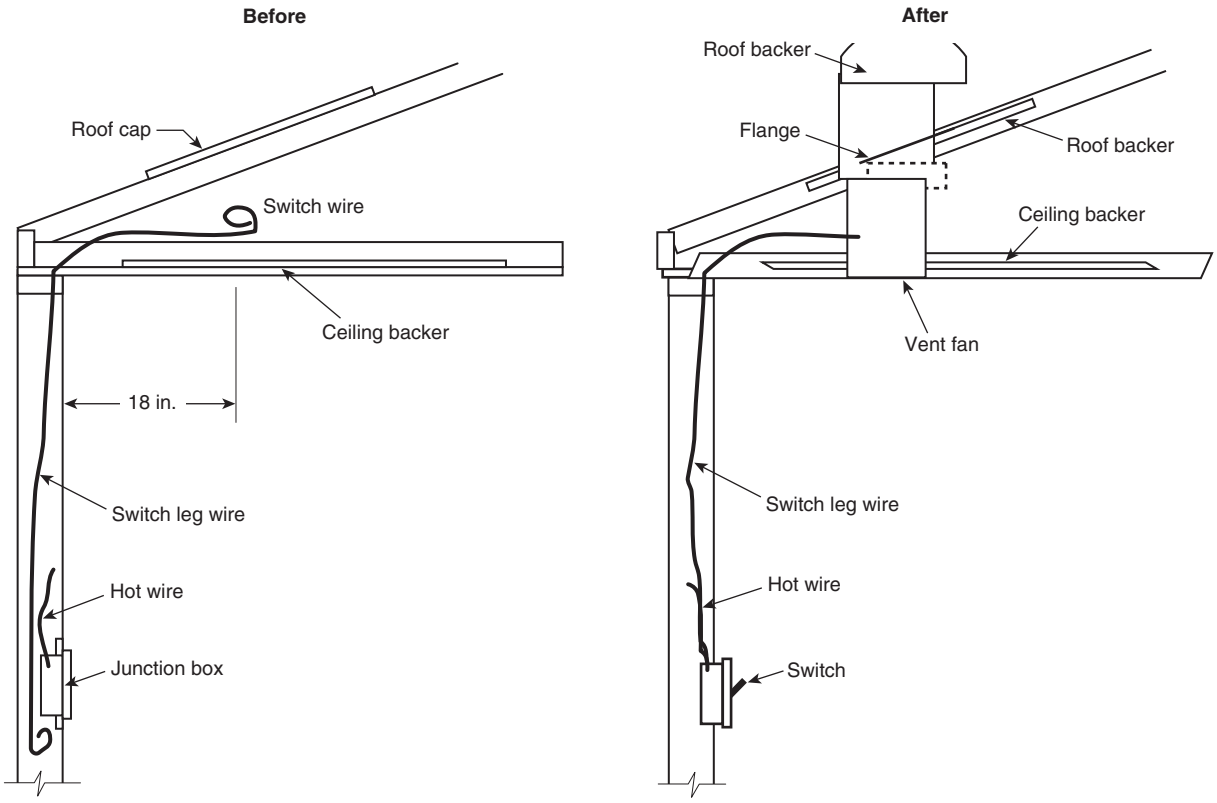

Note: For SI units, 1 in. = 25.4 mm.

FIGURE A.8.6 Ventilation Improvement Installation.

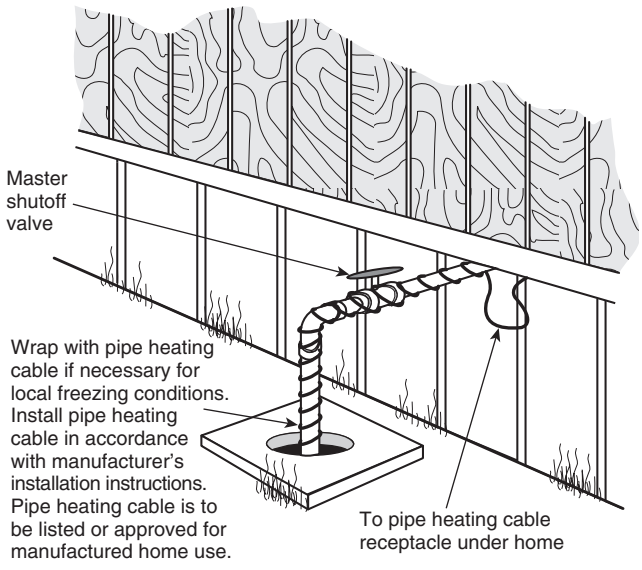

FIGURE A.10.2.3.2 Typical Water Connection.

A.10.4.7.1 IMPORTANT: Ensure that the water heater is filled with water before lighting the pilot light.

A.10.6 An inadequate power supply can result in improper operation of, and possible damage to, motors and appliances. The current rating in amperes of the home can be found on the tag located outside, next to the feeder or service entrance and on the electrical distribution panel.

A.10.6.1 IMPORTANT: Proper and safe connection depends on the type of supply system with which the home is equipped.

A.12.1 The installer is referred to Federal Regulations governing development in floodplains in 44 CFR 60.3, and to the commentary Section C.5.3 of ASCE 7, *Minimum Design Loads for Buildings and Other Structures.*

A.12.1.1.2 Flood damage–resistant materials are those that can withstand direct contact with flood waters for at least 72 hours without sustaining significant damage. Significant damage means any damage greater than that requiring cosmetic repair (e.g., repainting). NFIP Technical Bulletin 2-93 (available at http://www.fema.gov/pdf/fima/job4.pdf) provides additional information on flood damage–resistant materials. A protocol for testing the flood resistance of materials is also available (see: http://www.icc-es.org/Criteria/Protocol/). Note that this provision is intended to apply to all installation components except skirting that does not provide structural support to the home or its foundation and crossover ductwork below the bottom of the chassis frame beam.

Copyright National Fire Protection Association
Provided by IHS under license with NFPA
No reproduction or networking permitted without license from IHS
Not for Resale

A.12.1.1.3 This provision does not require a permanent foundation for all manufactured homes. This provision does not consider deflection of ground anchors and/or the support system, within the limits established by the AHJ as being acceptable, to be permanent lateral movement.

A.12.1.2 The Federal Emergency Management Agency (FEMA) publication FEMA 85, *Manufactured Home Installation in Flood Hazard Areas*, contains design and construction recommendations for elevated foundations as well as for connections and anchoring systems that will allow the foundation system to resist flood forces.

A.12.2.2 This provision is commonly referred to as the "36-inch rule" or "3-foot rule," which pertains to home parks that predate the jurisdiction's first adoption of a flood hazard ordinance or map (these parks are referred to as "existing" home parks). In such instances, home installations and substantial improvements are permitted with the lowest floor below the design flood elevation (where the design flood elevation is greater than 36 in. above grade), unless a home on that site has been substantially damaged by flood. If a home has been substantially damaged by flood, any repaired, new, or replacement home on that site must comply with the requirements for new installations outside existing home parks.

Installations in the following instances are not permitted to take advantage of the 36-in. rule:

(1) Substantially damaged homes and replacement homes for substantially damaged homes
(2) Home installations in expansions to existing manufactured home parks (where the expansion does not predate the jurisdiction's first adoption of a flood hazard ordinance or map)
(3) Home installations in new manufactured home parks (where the park does not predate the jurisdiction's first adoption of a flood hazard ordinance or map)
(4) Home installations outside existing manufactured home parks

A.12.5.2 FEMA Form 81-31, which can be used to submit surveyed elevation information, is available online at http://www.fema.gov/nfip/elvinst.shtm. This form is also used by insurance agents to obtain the correct insurance rating.

A.12.7.2 This provision requires the same level of flood resistance for utilities and equipment as for the home itself. Utilities and equipment can be elevated or can be installed such that they resist flood loads and flood damage. However, this standard considers crossover ductwork to be expendable, inexpensive, and easily replaced, and allows its placement below the chassis frame beam *(see exception)*. More information on utility installation in flood hazard areas can be found in FEMA 348, *Protecting Building Utilities from Flood Damage*.

Annex B Final Inspection Checklist

This annex is not a part of the requirements of this NFPA document but is included for informational purposes only.

B.1 Final inspection should be made when the home installation (setup) is complete. A checklist like the one in Figure B.1 should be developed to ensure that no items have been overlooked and that work has been properly completed.

B.2 All transit and installation damage is required to be reported to the manufacturer if the home is a new unit. Check with local authorities having jurisdiction prior to installation for code requirements and permits/inspections required.

Annex C Sample Checklist for AHJ Officials

This annex is not a part of the requirements of this NFPA document but is included for informational purposes only.

C.1 Figure C.1 is a sample form that can be used as a checklist by the AHJ for the installation of manufactured homes.

Copyright National Fire Protection Association
Provided by IHS under license with NFPA
No reproduction or networking permitted without license from IHS
Not for Resale

CHECKLIST FOR FINAL INSPECTION UPON COMPLETION OF HOME INSTALLATION

1. *Water and drain systems.* Check to ensure the following:
- ____ Correct materials for water and drain lines have been used
- ____ Connections and splices are properly made
- ____ Supports are of correct material and are properly spaced
- ____ Necessary inspections and tests have been made
- ____ Water lines are protected from freezing, when applicable
- ____ Proper slope has been maintained on drain lines

2. *Electrical systems.* Check to ensure the following:
- ____ Panel amperage matches connection to home
- ____ Electrical inspections have been performed, connections between multisections are in accordance with the MHCSS, and access covers are in place

3. *Gas/fuel oil systems.* Check to ensure the following:
- ____ Correct materials and fittings are used
- ____ The pressure test has been conducted on the gas system
- ____ The connection between multisections are in accordance with the MHCSS, with access as required

4. *Appliance function, operation, and venting.* Check to ensure the following:
- ____ Vent or chimney extensions shipped loose on the home have been mounted and serviced in accordance with the manufacturer's instructions
- ____ Appliances and valves have been tested and are properly working
- ____ Venting of appliances under unit are in accordance with the MHCSS
- ____ Dryer is properly vented
- ____ Solid-fuel-burning fresh air intake is properly installed
- ____ Temporary shipping blocks have been removed
- ____ Exhaust fan operation and air flow are correct

5. *Windows and doors.* Check to ensure the following:
- ____ Windows meet egress requirements and have operation instructions on them
- ____ Doors function properly
- ____ Temporary shipping hardware has been removed from windows and doors

6. *Exterior of home.* Check the following:
- ____ For damage to undercarriage or bottom board
- ____ Chassis, floor joists, or both for installation/transportation damage
- ____ Bottom board for rips or tears
- ____ For damage to siding (cracks, breaks, holes, nail pops, etc.)
- ____ For damage to metal or composition roofs, such as the following:
  - ____ Holes or rips in metal roof
  - ____ Shingles for damage and sealing
  - ____ Drip edge or fascia damage
  - ____ Roof openings for sealing (vents, stacks, etc.)
  - ____ To ensure that when gutters and downspouts are installed, the water is diverted away from the home

7. *Interior of home.* Check the following:
- ____ For damage to floor coverings (vinyl, carpet)
- ____ For damage to wall finish (holes, cracks, nail pops, etc.)
- ____ For damage to ceiling finish (holes, cracks, nail pops, etc.)
- ____ For damage to interior trim (splits, cracks, nail pops, etc.)
- ____ Multisection common areas for correct finishing

8. *Skirting.* Check to ensure the following:
- ____ Skirting used is in accordance with owner's specifications
- ____ Venting is in accordance with the manufacturer's specifications
- ____ Skirting is constructed to prevent frost movement in areas where it occurs
- ____ Polyethylene ground cover is correctly installed

9. *Blocking/footings.* Check to ensure the following:
- ____ Footings are of proper size and construction for soil conditions
- ____ Spacing of piers is in accordance with the manufacturer's guidelines
- ____ Footing depth is below frost line
- ____ Foundation walls, if required, meet local codes, ordinances, or covenants
- ____ Pier construction meets manufacturer's specifications

10. *Anchoring.* Check to ensure the following:
- ____ Approved anchors are used
- ____ Correct number of anchors, straps, or both are used according to the manufacturer's instructions
- ____ Anchors are installed at correct angles and in accordance with the anchor manufacturer's listing for approval

11. *Miscellaneous.* Check to ensure the following:
- ____ The smoke alarms or smoke detectors are installed per NFPA 501
- ____ The smoke alarms or smoke detectors are inspected and tested in accordance with the smoke alarm or smoke detector manufacturer's instructions
- ____ Construction seals (the "HUD" label) have not been damaged, removed, or covered by skirting
- ____ Installation/anchoring certificates, seals, or both have been issued and installed, if required
- ____ Data plate is intact and legible

© 2005 National Fire Protection Association NFPA 225 (p. 1 of 1)

FIGURE B.1 Sample Final Inspection Checklist.

Copyright National Fire Protection Association
Provided by IHS under license with NFPA
No reproduction or networking permitted without license from IHS
Not for Resale

CHECKLIST FOR THE AUTHORITY HAVING JURISDICTION

Owner: _____
Address: _____
Manufacturer: _____
Address: _____
Model: _____ Serial Number: _____ Mfd. Date: _____
"HUD" Label/State Label Number: _____
Dealer: _____ Dealer #: _____
Installer: _____ Installer #: _____
Local Authority Having Jurisdiction Inspection: _____
Local Permits: _____

INSTALLATION:

Installation #: _____ Anchor #: _____
Instructions Used: Manufacturer: _____ State: _____
Foundation: Foundation to Local Building Code: _____
Support: Support Locations per Manufacturer or Engineered Design: _____
Elevation: Elevation of Lowest Floor (If in a Flood Hazard Area): _____
Support Footings: Type: _____
Size: _____
Piers: Materials: _____
Spacing: _____
Shims: _____
Lot/Soil Conditions: _____
Anchors: Spacing: _____
Equipment Used: _____
Equipment Approved: _____
Frame Removed: (Prior to 11/89) Permitted by Manufacturer: _____
Foundation to Local Building Code: _____
Support Locations per Manufacturer or Engineered Design: _____
Elevation of Lowest Floor (If in a Flood Hazard Area): _____
Skirting: Type: _____
Attachment to Home: _____
Poly on Grade: _____
Access Panel: _____

UTILITIES:

Water: Correct Materials/Fittings: _____
Protected from Freezing: _____
Support Spacing: _____

© 2005 National Fire Protection Association NFPA 225 (p. 1 of 2)

FIGURE C.1 Sample Checklist for Enforcement Officials.

Copyright National Fire Protection Association
Provided by IHS under license with NFPA
No reproduction or networking permitted without license from IHS
Not for Resale

CHECKLIST FOR THE AUTHORITY HAVING JURISDICTION (Cont.)

Waste: Correct Materials/Fittings: _____

Slope to Drain: _____

Support Spacing: _____

Main Sewer Connection (Gasketed): _____

Gas: Correct Materials/Fittings: _____

Pressure Test: _____

Electric: Connection Between Halves (MHCSS — "HUD-Code"): _____

("Pre-HUD-Code" Homes only)

Aluminum Wiring: _____

Method Used to Eliminate or Reduce Danger: _____

Supply Amps (Matches Panel in Home): _____

Smoke Alarms or Smoke Detectors: Installed: _____

Alterations: _____

Inspected/Functionally Tested: _____

DATA PLATE:

Roof Zone Load: _____ Heating Zone: _____

Furnace: Original: ❑ yes ❑ no Gypsum Board Lined: _____

Water Heater: Original: ❑ yes ❑ no Gypsum Board Lined: _____

Dryer: Original: ❑ yes ❑ no

Range: Original: ❑ yes ❑ no

MISCELLANEOUS:

Fireplace: ❑ yes ❑ no Model: _____ Approved: _____

Chimney: _____ Fresh Air Intake: _____

Venting: Skirting/Foundation: _____

Roof and/or O.H.s: _____

Alterations: Approved: _____ Inspected: _____

Comments: _____

_____

_____

_____

_____

_____

Inspector: _____ Date: _____ Time: _____

Present During Inspection: _____

© 2005 National Fire Protection Association NFPA 225 (p. 2 of 2)

FIGURE C.1 *Continued*

--`,,,``-`-`,,`,,`,`,,`---
Copyright National Fire Protection Association
Provided by IHS under license with NFPA
No reproduction or networking permitted without license from IHS
Not for Resale

Annex D Sample Schedule for Manufactured Home Installation Permits

This annex is not a part of the requirements of this NFPA document but is included for informational purposes only.

D.1 For installation of new or relocated homes in a municipality, a basic permit flat fee can be established by the AHJ to cover the following inspections:

(1) Foundation inspection
  (a) Frost depth foundation (requires extra inspection)
  (b) Piers and footings on grade (common to most community installations)
  (c) Skirting installation/ventilation
  (d) Anchoring of unit (when required by the AHJ or by manufacturer's instructions)
(2) Plumbing inspection
  (a) Sewer connection
  (b) Water connection
  (c) On-site work performed on home water/drain lines
(3) Gas-line inspection
  (a) Materials and connections
  (b) Testing
(4) Structural inspection
  (a) Data plate information (on homes manufactured June 15, 1976 and later)
  (b) Structural damage
  (c) Precode upgrading rules by the AHJ *(see Annex C)*
(5) Electrical inspection (state electrical board or municipality)

D.2 Separate permit or hourly inspection fees in excess of the original basic permit flat fees can be established by the AHJ for the following:

(1) Required corrections — reinspection
(2) Accessory structures or buildings
(3) Inspection (e.g., wood decks, carports, entryways, outbuildings)
(4) Alterations to original home inspection (i.e., structural, mechanical, plumbing, electrical) — contact the AHJ prior to issuance, as submittal to the AHJ might be required for approval
(5) Plan review of accessory structures or alterations

Annex E Informational References

E.1 Referenced Publications. The following documents or portions thereof are referenced within this standard for informational purposes only and are thus not part of the requirements of this document unless also listed in Chapter 2.

E.1.1 NFPA Publications. National Fire Protection Association, 1 Batterymarch Park, Quincy, MA 02169-7471.

NFPA 5000®, Building Construction and Safety Code®, 2003 edition.

E.1.2 Other Publications.

E.1.2.1 ASCE Publication. American Society of Civil Engineers, 1801 Alexander Bell Drive, Reston, VA 20191.

ASCE 7, *Minimum Design Loads for Buildings and Other Structures*, 2002.

E.1.2.2 ASTM Publication. American Society for Testing and Materials, 100 Barr Harbor Drive, West Conshohocken, PA 19428-2959.

ASTM C 90, *Standard Specification for Load Bearing Concrete Masonry Units*, 2002.

E.1.2.3 FEMA Publications. Federal Emergency Management Agency, Washington, DC 20472.

FEMA 85, *Manufactured Home Installation in Flood Hazard Areas*, September 1985.

FEMA 348, *Protecting Building Utilities from Flood Damage*, November 1999.

FEMA Form 81-31.

E.1.2.4 NFIP Publications. FEMA National Flood Insurance Program, 500 C Street, SW, Washington, DC 20472.

Community Status Book.

Technical Bulletin 2-93, 1993.

E.1.2.5 U.S. Government Publications. U.S. Government Printing Office, Washington, DC 20402.

HUD Handbook 4930.3, *Permanent Foundations Guide for Manufactured Housing*.

Title 24, Code of Federal Regulations, Part 3280, *Manufactured Home Construction and Safety Standards*.

Title 24, Code of Federal Regulations, Part 3282, *Manufactured Home Procedural and Enforcement Regulations*.

Title 42, United States Code, Part 5401.

Title 44, Code of Federal Regulations, Part 60.3.

E.1.2.6 Other Publications. *Merriam-Webster's Collegiate Dictionary*, 11th edition, Merriam-Webster, Inc., Springfield, MA, 2003.

E.2 Informational References. The following documents or portions thereof are listed here as informational resources only. They are not a part of the requirements of this document.

E.2.1 Foundation-Related References. The following references are being provided to assist the user in obtaining related information pertaining to foundations.

Building Foundation Design Guidebook, Doc. No. DE88013350, National Technical Information Service, 5285 Port Royal Road, Springfield, VA 22161.

Design Guide for Frost-Protected Shallow Foundations, NAHB Research Center, Upper Marlboro, MD, June 1994.

Energy Efficient Frost Protected Shallow Foundation Design Guidelines, 1999 NAHB Research Center.

Guidelines for Anchor System Design — Technical Support Document, Manufactured Housing Research Alliance, 2109 Broadway, Suite #203, New York, NY 10023, January 2000.

Manufactured Home Foundation Design for Seasonally Frozen Ground, Progressive Engineering Incorporated, 58640 State Road 15, Goshen, IN 46526, June 14, 1996.

Manufactured Housing Reference Guide for State Installation Programs, Chapter 10, Council of State Administrative Agencies (COSAA), Arlington, VA, 1998.

Permanent Wood Foundation System — Design, Fabrication, and Installation Manual, National Forest Products Association, 1250 Connecticut Avenue, NW, Washington, DC 20036, 1987.

E.3 References for Extracts. The following documents are listed here to provide reference information, including title and edition, for extracts given throughout the nonmandatory sections of this standard as indicated by a reference in brackets [ ] following a section or paragraph. These documents are not a part of the requirements of this document unless also listed in Chapter 2 for other reasons.

NFPA 501A, *Standard for Fire Safety Criteria for Manufactured Home Installations, Sites, and Communities*, 2005 edition.

NFPA 5000®, Building Construction and Safety Code®, 2003 edition.

Copyright National Fire Protection Association
Provided by IHS under license with NFPA
No reproduction or networking permitted without license from IHS
Not for Resale

Index

© 2005 National Fire Protection Association. All Rights Reserved.

The copyright in this index is separate and distinct from the copyright in the document that it indexes. The licensing provisions set forth for the document are not applicable to this index. This index may not be reproduced in whole or in part by any means without the express written permission of NFPA.

-A-

ABS footing pads 6.3.1.3
Accessory buildings or structures ....*see* Manufactured home accessory buildings or structures
Air conditioners 9.2.1, A.9.2.1.1, A.9.2.1.2
A-coil units 9.2.1.3
Circuit rating 9.2.1.2, A.9.2.1.2
Drains 8.8.4
Flood hazard areas 12.7.2, A.12.7.2
Air inlets and outlets 8.8.4, 9.3.7, 12.6.2, A.9.3.7
Alterations .....*see* Installation alterations
Anchoring equipment
Definition 3.3.3
Installation of sidewall or over-the-roof straps 7.5.3
Number and location of anchor straps 7.5.2.4.1
Spacing of anchor straps 7.5.2.4.3.1
Specifications for tie-down straps 7.5.2.3
Anchoring systems ..... 4.5; *see also* Anchoring equipment; Anchors
Definition 3.3.4
Flood hazard areas .....*see* Flood hazard areas
Instructions 7.5, A.7.5.2, A.7.5.4.2
Climatic conditions, severe 7.5.4, A.7.5.4.2
Normal installations 7.5.2, A.7.5.2
Security against wind 7.5.1
Sidewall or over-the-roof straps 7.5.3
Seismic provisions 14.4
Engineered design 4.5.3.3
Foundation wall support systems 13.4.7, 13.4.8
Pier support systems 13.3.6, 13.3.8
Wood cripple wall support systems ..... 13.5.6 to 13.5.8
Anchors 7.5.1.3
Definition 3.3.2
For expanding rooms 7.6.3.2
Installation 7.5.2.4.3
Longitudinal anchorage 7.5.2.4.2
Number and location of 7.5.2.4
Outside appliances 12.6.1
Specifications for 7.5.2.3.1
Appliances
Gas
Connections 10.4.6, A.10.4.6
Conversion of 10.4.1
Orifices, inlet 10.4.2, A.10.4.2
Startup procedures 10.4.7, A.10.4.7.1
Outside 12.6.1
Preparation of ..... Chap. 9
Flood hazard areas 12.6
Application of standard 1.3, A.1.3.3
Approved (definition) ..... 3.2.1, A.3.2.1; *see also* Authority having jurisdiction
Arid
Definition 3.3.5
Ground cover requirement, arid regions 5.8.1
Authority having jurisdiction
Alterations, approval of plans for 4.2, A.4.2
Alternative systems, methods, or devices, approval of 1.6.2, 1.6.6, 4.5.1.3
Anchoring systems, requirements for 7.5.1.1, 7.5.2.4.3.1, 7.5.2.4.3.2
Chassis beam, approval of any changes in 13.3.6
Definition 3.2.2, A.3.2.2
Drainage system requirements 10.3.2.1, 10.3.3
Elevation certification 12.5.2, A.12.5.2
Fireplace and wood stove installations, approval of 9.3.4
Flood hazard areas, installations in 12.1.2, A.12.1.2
Footings, approval of materials for 6.3, A.6.3.4
Foundation, approval of 6.1.2
Gas system requirements 10.4.5
Ground moisture control, approval of 5.8.1
Heating oil systems requirements 10.5.3
Installation requirements ..... 7.1 to 7.3, A.7.1, A.7.2, A.7.3
Investigation and bearing capacity of soil, approval of 5.6.1, 5.6.2, 5.6.3.1, A.5.6.1
On-site structures, installation of 7.6.2
Sample checklist for ..... Annex C
Utility connection requirements 10.1.1
Awnings 8.4

-B-

Base flood elevation .....*see* Elevation
Bottom board repair 7.7.5, A.7.7.5
Breakaway walls 12.4.2.1
Certification 12.5.4

-C-

Cable TV wiring 8.9, A.8.9
Caps, pier 6.2.3.2.2, 6.2.3.4
Carports 7.6.4
Ceiling fans 8.5
Certification
Breakaway wall 12.5.4
Flood opening 12.5.5
Lowest floor and elevation ..... 12.2.3, 12.5.1 to 12.5.3
V zone 12.5.3
Checklists
Authority having jurisdiction, sample checklist for ..... Annex C
Final inspection checklist ..... Annex B
Chimneys 9.3, A.9.3.5, A.9.3.7
Climatic conditions, severe .... 6.5.1, 7.5.4, A.7.5.4.2; *see also* Freezing climates; Wind, security against
Close-up 7.7, A.7.7
Clothes dryer vents 8.8.4, 9.1, A.9.1
Comfort cooling systems 9.2, A.9.2.1.1, A.9.2.1.2
Concrete block piers 6.2.2.1, 6.2.3.2.1, 6.2.4, A.6.2.2.1, A.6.2.3.2.1.1, A.6.2.4.2
Concrete footings 6.3.1.1
Connections, utilities .....*see* Utility systems
Construction 4.5
Piers, seismic provisions 13.3.1
Skirting 8.8.1, A.8.8.1
Cooktops, venting 9.4
Crawl space
Access to 13.4.4, 13.4.9, 13.5.9
Ventilation 8.8.2, 13.4.9, 13.5.9, A.8.8.2.1
Crossovers 7.4
Definition 3.3.6, A.3.3.6
Drainage systems 10.3.4
Ductwork 7.4.2
Gas supply 10.4.4, A.10.4.4
Water supply connections 10.2.2.2

Copyright National Fire Protection Association
Provided by IHS under license with NFPA
No reproduction or networking permitted without license from IHS
Not for Resale

-D-

Data plates 4.3, 4.4.4, A.4.3
Definitions ..... Chap. 3
Design, installation 4.5
Combined design methods 4.5.2
Engineered design ..... *see* Engineered design
Piers ..... *see* Piers
Prescriptive design ..... *see* Prescriptive design
Seismic design ..... *see* Seismic design
Design flood ..... *see* Elevation; Flood
Downspouts 5.7.4
Drainage systems 10.3
Flood hazard areas 12.7.2, A.12.7.2
Site preparation 5.7
Dryers ..... *see* Clothes dryer vents
Ducts
Combustion air duct inlets 9.3.7, A.9.3.7
Crossovers 7.4.2
Flood hazard areas 12.7.2, A.12.7.2

-E-

Eaves, hinged 8.2, A.8.2
Electrical systems 10.6, A.10.6, A.10.6.1
Equipment and installations 10.6.2
Flood hazard areas 12.7.2, A.12.7.2
Garage 7.6.4.3
House wiring, description and rating of 10.6.1, A.10.6.1
Elevations 6.2.4.4, 12.1.1, A.12.1.1.2, A.12.1.1.4
Base flood elevation (BFE) 12.1.1.6
Definition 3.3.7.1
Certification ..... 12.2.3, 12.5.1 to 12.5.3
Design flood elevation (DFE) 12.1.1.2, A.12.1.1.2
Definition 3.3.7.2
Lowest floor elevations 12.2, A.12.2.2
Existing parks 12.2.2, A.12.2.2
Inspection and elevation certification ..... 12.2.3, 12.5.1 to 12.5.3, A.12.5.2
New parks, expanded parks, or outside parks 12.2.1
Outside appliances 12.6.1
Encroachments 5.2
Engineered design 4.5.1.2, 4.5.2
Foundations 6.1.1
Seismic design 4.5.3.2.2, 4.5.3.3
Equivalency to standard 1.6, 4.5.2
Appeal 1.6.8
Approval of alternatives 1.6.2, 1.6.6, 4.5.1.3
Foundations 6.1.1
Permitted alternatives 1.6.3
Seismic provisions 4.5.3.2.2
Tests 1.6.7
Evaporative coolers 9.2.3
Expanding rooms, installation of 7.6.3
Exterior close-up 7.7.1, 7.7.2, A.7.7.1, A.7.7.2
Exterior lighting fixtures 8.5

-F-

Fans
Ceiling 8.5
Exhaust 8.2.2
Final inspection checklist ..... Annex B
Finishing, installation 7.7
Fireplaces 8.2.2, 9.3, A.9.3.5, A.9.3.7
Fire separation distances 5.3, 7.6.2, 11.2
Floating slab systems 6.3.2.2
Flood
Base 12.1.1.6
Definition 3.3.8.1
Design
Definition 3.3.8.2
Foundations and anchoring for 12.1.1.2, 12.1.1.3, 12.3.1, A.12.1.1.2, A.12.1.1.3
Materials for 12.1.1.2, A.12.1.1.2
Methods and practices for 12.1.1.1
Flood damage–resistant material 12.1.1.2, A.12.1.1.2
Definition 3.3.9
Flood hazard areas ..... Chap. 12
Appliances, preparation of 12.6
Application of standard 1.3.6, A.1.3.6.1
Authority having jurisdiction and registered professionals, consultation with 12.1.2, A.12.1.2
Definition 3.3.10, A.3.3.10
Elevations ..... *see* Elevations
Floodways, installations in 12.1.1.6
Foundations and anchoring 12.1.1, 12.2.1.2, 12.2.2.2, 12.3, A.12.1.1.2, A.12.1.1.4
Design flood loads and conditions 12.3.1
Existing parks 12.3.3
New parks, expanded parks, or outside parks 12.3.2
V zone certification ..... 12.5.3(1)
Installation procedures 12.4
Fill, use of 12.4.1
Obstructions and enclosures below design flood elevation 12.4.2
Materials 12.1.1.2, A.12.1.1.2
Methods and practices 12.1.1.1
Multiple flood hazard zones, homes in 12.1.1.5
Post-installation considerations 12.5, A.12.5.2
Elevation certification 12.2.3, 12.5.2, A.12.5.2
Lowest floor inspection 12.2.3, 12.5.1
Pre-installation considerations 1.3.6.1, A.1.3.6.1
Seismic provisions 4.5.3.2.1
Special techniques required 12.1.1, A.12.1.1.2, A.12.1.1.4
Utility systems 12.7, A.12.7.2
Flood hazard map 1.3.6.1, A.1.3.6.1
Definition 3.3.11
Flood hazard zones
A zones 12.2.1.2, 12.3.2.2, 12.3.3.2, 12.4.2.2
Certification ..... 12.5.2.1(1)
V zones 12.2.1.1, 12.3.2.1, 12.3.3.1, 12.4.2.1
Certification ..... 12.5.2.1(1), 12.5.3
Flood openings ..... *see* Foundation walls
Floodways, installations in 12.1.1.6
Footings 5.5.2, 6.3
ABS footing pads 6.3.1.3
Acceptable types 6.3.1
Combination systems 6.3.4, A.6.3.4
Definition 3.3.12
Freezing climates, placement in 6.3.2, A.6.3.2.3
Ground cover installation 5.8.3
Installation ..... Figs. 6.2.2.1(a) and (b)
Seismic provisions 13.2, 13.3.3, 13.5.5
Size of 6.3.3, A.6.3.3
Foundations ..... 5.5.2, Chap. 6, 7.5.2.1; *see also* Footings; Piers
Floating slab systems 6.3.2.2
Insulated 6.3.2.3
Permanent 6.4
Seismic provisions 13.4, 13.5.9
Engineered design 4.5.3.3
Seismic design categories (SDC) 6.1.4
Special considerations 6.5
Severe climatic conditions 6.5.1
Snow load conditions 6.5.2
Foundation walls 13.1.2
Definition 3.3.13, A.3.3.13
Flood openings ..... 12.3.2.2, 12.4.2.2.1, 12.5.2.1(4)
Certification 12.5.5
Seismic provisions 13.4.9, 13.5.9
Seismic provisions 13.4, 13.5.9

Copyright National Fire Protection Association
Provided by IHS under license with NFPA
No reproduction or networking permitted without license from IHS
Not for Resale

Freezing climates
Anchor augers, installation of 7.5.4.1
Footings, placement of 6.3.2, A.6.3.2.3
Frost penetration map ..... Fig. 6.3.2.1.3
Water pipe 10.2.2.2.3, 10.2.3, A.10.2.3.2
Furnaces ..... 8.2.2, 10.4.7.2; *see also* Appliances

-G-

Gaps, pier 6.2.3.2.3, 6.2.3.4
Garages 7.6.4
Gas supply ..... 10.4, A.10.4; *see also* Appliances, Gas
Crossovers 10.4.4, A.10.4.4
Flood hazard areas 12.7.1, 12.7.2, A.12.7.2
Orifices and regulators 10.4.2, A.10.4.2
Proper supply pressure 10.4.3, A.10.4.3
Ground-fault circuit protection 7.6.4.3
Grounding of fixtures 8.5.2
Ground moisture control (ground covers) 5.8
Gutters 5.7.4
Gypsum wallboard, unfinished 7.7.4

-H-

Heating oil systems 10.5, 12.7.1
Heat pumps 9.2.2
HVAC systems 12.7.2, A.12.7.2

-I-

Installation 4.4
Alterations ..... *see* Installation alterations
Definition 3.3.14
Design and construction 4.5
Instructions ..... *see* Installation instructions
Manual supplements 4.4.3
Procedures ..... *see* Installation procedures
Seismic ..... *see* Seismic design
Utility schematics 4.4.2
Installation alterations 4.2, A.4.2
Definition 3.3.15
Installation instructions 4.4.1
Anchoring systems ..... *see* Anchoring systems
Definition 3.3.16
Drainage system 10.3.1, 10.3.4
Expanding rooms 7.6.3.1
Garages and carports 7.6.4.1, 7.6.4.2
Heating oil systems 10.5.2
Multisection homes, interconnection of 7.3, A.7.3
Pipe heating cable 10.2.3.2, A.10.2.3.2
Roofs and eaves, hinged 8.2, A.8.2
Snow load conditions 6.5.2
Ventilation options 8.6, A.8.6
Installation procedures ..... Chap. 7
Anchoring instructions ..... *see* Anchoring systems
Close-up/finishing 7.7
Crossover connections 7.4
Interconnection of multisection homes 7.3, A.7.3
Before moving home to location 7.1, A.7.1
On-site structures 7.6
Positioning of home 7.2, A.7.2
Instructions, installation ..... *see* Installation instructions
Insulated foundations 6.3.2.3
Interior close-up 7.7.1, 7.7.3, A.7.7.1
Interior finishes 7.7.4.2

-J-

Joints, weatherproofing of 8.10

-L-

Labeled (definition) 3.2.3
Landings 7.6.6
Life safety features ..... Chap. 11
Lighting fixtures, exterior 8.5
Listed (definition) 3.2.4, A.3.2.4
Lowest floor
Definition 3.3.17, A.3.3.17
Elevations ..... *see* Elevations
Inspection, flood hazard area 12.2.3, 12.5.1

-M-

Manual supplements, home installation 4.4.3
Manufactured home (definition) 3.3.18
Manufactured home accessory buildings or structures 4.5.2
Definition 3.3.19, A.3.3.19
Installation of on-site structures 7.6
Manufactured home gas supply connectors
Definition 3.3.20
Flexible connector quick-disconnect 10.4.4.2
Manufactured home parks or subdivisions
Definition 3.3.21
Existing
Definition 3.3.21.1
Foundation and anchoring, flood hazard area 12.3.3
Lowest floor elevation, flood hazard area 12.2.2, A.12.2.2
New
Definition 3.3.21.2
Foundation and anchoring, flood hazard areas 12.3.2
Lowest floor elevation, flood hazard area 12.2.1
Manufactured home site ..... *see also* Site preparation
Definition 3.3.22
On-site structures, installation of 7.6
Molding, optional 8.7
Multiple section homes
Close-up, exterior and interior 7.7.1, A.7.7.1
Crossover connections ..... *see* Crossovers
Drainage line crossovers 10.3.4
Interconnection of 7.3, A.7.3
Pier location and spacing for 6.2.5.4, A.6.2.5.4

-O-

Oil, heating ..... *see* Heating oil systems
On-site structures, installation of 7.6
Ovens, venting 9.4
Over-the-roof straps 7.5.3

-P-

Panels, optional 8.7
Parks ..... *see* Manufactured home parks or subdivisions
Perimeter blocking 6.2.5.5, 7.6.3.2, A.6.2.5.5
Permits
For alterations 4.2, A.4.2
Issuance of 5.4
Sample schedule for ..... Annex D
Piers 6.2
Acceptable piers—materials specification 6.2.2, A.6.2.2.1
Caps 6.2.3.2.2, 6.2.3.4
Concrete block 6.2.3.2.1, 6.2.4, A.6.2.3.2.1.1, A.6.2.4.2
Definition 3.3.23, A.3.3.23
Design requirements 6.2.3, A.6.2.3.2.1.1
Clearance under homes 6.2.3.3
Configuration 6.2.3.2, A.6.2.3.2.1.1
Load-bearing capacity 6.2.2.2, 6.2.3.1
Elevated homes 6.2.4.4
Flood hazard areas 12.3.3.1, 12.3.3.2
Gaps 6.2.3.2.3, 6.2.3.4
Heights 6.2.3.2.4
Installation ..... Figs. 6.2.2.1(a) and (b)

Copyright National Fire Protection Association
Provided by IHS under license with NFPA
No reproduction or networking permitted without license from IHS
Not for Resale

Location and spacing ..... 6.2.5, A.6.2.5.3 to A.6.2.5.5
Perimeter blocking 6.2.5.5, A.6.2.5.5
Seismic provisions 13.3
Pipe heating cable 10.2.3.2, A.10.2.3.2
Plumbing system
Flood hazard areas 12.7.2, A.12.7.2
P-traps 7.7.5.3
Stacks 8.2.2
Porches 7.6.5
Pre-installation considerations 1.3.6.1, 4.1
Prescriptive design 4.5.1.1, 4.5.2
Seismic requirements .....*see* Seismic design
Pressure-treated permanent wood 6.2.2.1, 6.3.1.2, A.6.2.2.1

-R-

Ramadas 8.4
Definition 3.3.24
Ranges, venting 9.4
References ..... Chap. 2, Annex E
Retroactivity of standards 1.4
Roofs
Chimney extension above 9.3.5, A.9.3.5
Gas supply vents 10.4.6, A.10.4.6
Hinged 8.2, A.8.2
Live load, snow load conditions 6.5.2

-S-

Scope of standard 1.1, A.1.1
Seams, weatherproofing 8.10
Seismic design ..... 4.5.3, 7.5.1.3, Chap. 13
Engineered design 4.5.3.3
Grade slope of site 13.1.1
Installation and equipment bracing requirements ..... 4.5.3.4, Chap. 14
Minimum prescriptive support system requirements 13.2
Prescriptive design 4.5.3.2
Foundation wall support systems 13.4
Pier support systems 13.3
Wood cripple wall support systems 13.5
Seismic design categories (SDC) ..... 4.5.3.1.1 to 4.5.3.1.3, 4.5.3.2, 13.1
Appliances, preparation of 9.6
Counties, listing of ..... Table 4.5.3.1.1
Foundations 6.1.4
Map ..... Fig. 4.5.3.1.1
Separation distances .....*see* Fire separation distances
Setback distances 5.2
Sewer drain connections 8.8.3, 10.3.3
Shall (definition) 3.2.5
Should (definition) 3.2.6
Shutoff valves
Gas 10.4.7.1
Water 10.2.2.1, 10.2.3.1
Sidewall straps 7.5.3
Siding
Close-up 7.7.2, A.7.7.2
Lighting outlet boxes, installation of 8.5.4
Optional 8.7
Single-section homes
Close-up, exterior and interior 7.7.1, A.7.7.1
Pier location and spacing for 6.2.5.3, A.6.2.5.3
Site-installed features ..... Chap. 8
Awnings and ramadas 8.4
Hinged roofs and eaves 8.2, A.8.2
Joints and seams, weatherproofing of 8.10
Lights and fixtures, miscellaneous 8.5
Panels, siding, and molding, optional 8.7
Skirting 8.8, A.8.8.1, A.8.8.2.1
Telephones and cable TV 8.9, A.8.9
Ventilation openings 8.6, A.8.6
Windows, garden and bay 8.3
Site preparation ..... Chap. 5, 7.1, A.7.1
Drainage 5.7
Encroachments and setback distances 5.2
Fire separation distances 5.3
Ground moisture control 5.8
Issuance of permits 5.4
Sloped sites 5.7.2
Soil, investigation and bearing capacity of 5.5.2, 5.6, A.5.6.1
Transporter, access for 5.1
Skirting 8.8, 9.4.2, 12.4.2.1, 12.4.2.2.2, A.8.8.1, A.8.8.2.1
Definition 3.3.25
Sloped sites 5.7.2, 13.1.1
Smoke alarms 11.1
Snow load conditions 6.5.2
Soil, investigation and bearing capacity of 5.5.2, 5.6, A.5.6.1
Expansive soils 5.6.3
Maximum allowable soil pressures ..... Table 5.6.1
Presumptive capacities 5.6.1, A.5.6.1
Seismic provisions 13.2.1
Sprinkler system, water supply for 10.2.5
Stabilizing devices (definition) .... 3.3.26; *see also* Anchoring systems; Support systems
Stairways 7.6.6
Standard (definition) 3.2.7
Steps 7.6.6
Structures .....*see also* Manufactured home accessory buildings or structures
Definition 3.3.27
On-site structures, installation of 7.6
Subdivisions .....*see* Manufactured home parks or subdivisions
Substantial damage ..... 12.3.3.1 Ex.
Definition 3.3.28
Substantial improvement 12.2.2.1
Definition 3.3.29
Support systems ..... 4.5, 4.5.2; *see also* Anchoring systems; Footings; Foundations; Piers
Definition 3.3.30
Seismic design .....*see* Seismic design

-T-

Tanks, fuel ..... 10.5.1, 10.5.3 to 10.5.5, 12.7.1
Telephone wiring 8.9, A.8.9
Term use 1.5
Tests
Alternative construction systems 1.6.7
Drainage systems 10.3.5
Electrical system 10.6.3
Gas system 10.4.5
Heating oil system leak test procedure 10.5.5
Soil 5.5.2, 5.6, A.5.6.1
Utility connections 10.1.2
Water supply 10.2.4
Tie-down straps 7.5.2.3.2
Ties .....*see also* Anchoring equipment
Diagonal (definition) 3.3.31.1
Vertical (definition) 3.3.31.2
Transporter, access for 5.1

-U-

Utility connections ..... 6.2.3.3.1, Chap. 10
Crossovers .....*see* Crossovers
Definition 3.3.32
Gas supply systems and appliances 10.4.4.2, 10.4.6, A.10.4.6
Procedures, proper 10.1
Sewer 8.8.3, 10.3.3
Skirting, access openings in 8.8.3
Water supply 10.2, A.10.2.3.2

Copyright National Fire Protection Association
Provided by IHS under license with NFPA
No reproduction or networking permitted without license from IHS
Not for Resale

Utility systems ..... *see also* Water supply
Availability at site 7.1, A.7.1
Electricity 10.6, 12.7.2, A.10.6, A.12.7.2
Flood hazard areas 12.7, A.12.7.2
Gas supply 10.4
Heating oil systems 10.5
Schematics 4.4.2
Seismic and wind displacement, accommodation of 14.4

-V-

Vapor retarders 5.8
Ventilation 8.6, 8.8.2, A.8.6, A.8.8.2.1
Vents
Gas-burning appliances 10.4.6, A.10.4.6
Range, cooktop, and oven 9.4
Vent stacks 8.2.2, A.8.2

-W-

Water heaters ..... 8.2.2, 10.4.7.2, 14.2; *see also* Appliances
Water supply
Access openings for 8.8.3
Connections 10.2, A.10.2.3.2
Fire sprinkler systems 10.2.5
Flood hazard areas 12.7.2, A.12.7.2
Freezing protection 10.2.2.2.3, 10.2.3, A.10.2.3.2
Maximum supply pressure and reduction 10.2.1
Shutoff valves 10.2.2.1, 10.2.3.1
Testing procedures 10.2.4
Wind, security against 7.5.1, 7.5.4.2, 14.4, A.7.5.4.2
Flood hazard areas 12.3.1, 12.3.2.1
Windows, garden and bay 8.3
Wood cripple wall support systems, seismic provisions 13.5
Wood stoves 9.3, A.9.3.5, A.9.3.7

Copyright National Fire Protection Association
Provided by IHS under license with NFPA
No reproduction or networking permitted without license from IHS
Not for Resale

Sequence of Events Leading to Publication of an NFPA Committee Document

Call goes out for proposals to amend existing document or for recommendations on new document.

▼

Committee meets to act on proposals, to develop its own proposals, and to prepare its report.

▼

Committee votes on proposals by letter ballot. If two-thirds approve, report goes forward. Lacking two-thirds approval, report returns to committee.

▼

Report — *Report on Proposals* (ROP) — is published for public review and comment.

▼

Committee meets to act on each public comment received.

▼

Committee votes on comments by letter ballot. If two-thirds approve, supplementary report goes forward. Lacking two-thirds approval, supplementary report returns to committee.

▼

Supplementary report — *Report on Comments* (ROC) — is published for public review.

▼

NFPA membership meets (Annual or Fall Meeting) and acts on committee report (ROP or ROC).

▼

Committee votes on any amendments to report approved at NFPA Annual or Fall Meeting.

▼

Appeals to Standards Council on Association action must be filed within 20 days of the NFPA Annual or Fall Meeting.

▼

Standards Council decides, based on all evidence, whether or not to issue standard or to take other action, including upholding any appeals.

Committee Membership Classifications

The following classifications apply to Technical Committee members and represent their principal interest in the activity of the committee.

M *Manufacturer:* A representative of a maker or marketer of a product, assembly, or system, or portion thereof, that is affected by the standard.

U *User:* A representative of an entity that is subject to the provisions of the standard or that voluntarily uses the standard.

I/M *Installer/Maintainer:* A representative of an entity that is in the business of installing or maintaining a product, assembly, or system affected by the standard.

L *Labor:* A labor representative or employee concerned with safety in the workplace.

R/T *Applied Research/Testing Laboratory:* A representative of an independent testing laboratory or independent applied research organization that promulgates and/or enforces standards.

E *Enforcing Authority:* A representative of an agency or an organization that promulgates and/or enforces standards.

I *Insurance:* A representative of an insurance company, broker, agent, bureau, or inspection agency.

C *Consumer:* A person who is, or represents, the ultimate purchaser of a product, system, or service affected by the standard, but who is not included in the *User* classification.

SE *Special Expert:* A person not representing any of the previous classifications, but who has a special expertise in the scope of the standard or portion thereof.

NOTES:

1. "Standard" connotes code, standard, recommended practice, or guide.
2. A representative includes an employee.
3. While these classifications will be used by the Standards Council to achieve a balance for Technical Committees, the Standards Council may determine that new classifications of members or unique interests need representation in order to foster the best possible committee deliberations on any project. In this connection, the Standards Council may make such appointments as it seems appropriate in the public interest, such as the classification of "Utilities" in the National Electrical Code Committee.
4. Representatives of subsidiaries of any group are generally considered to have the same classification as the parent organization.

Copyright National Fire Protection Association
Provided by IHS under license with NFPA
No reproduction or networking permitted without license from IHS
Not for Resale

NFPA Technical Committee Document Proposal Form

Note: All proposals must be received by 5:00 p.m. EST/EDST on the published proposal closing date.

For further information on the standards-making process, please contact Codes and Standards Administration at 617-984-7249. For technical assistance, please call NFPA at 617-770-3000.

FOR OFFICE USE ONLY
Log #: _____
Date Rec'd: _____

Please indicate in which format you wish to receive your ROP/ROC: ☐ **CD ROM** ☐ **paper** ☐ **download**
(Note: In choosing the download option you intend to view the ROP/ROC from our Website. No copy will be sent to you.)

Date 12/18/02 **Name** John B. Smith **Telephone** 617-555-1212
Company _____
Address 9 Seattle St. **City** Seattle **State** WA **Zip** 02255
Please indicate organization represented (if any) Fire Marshals Assn. of North America

1. **a) NFPA Document Title** National Fire Alarm Code
   b) NFPA No. & Edition NFPA 72, 2002 ed. **c) Section/Paragraph** 4.4.7.1.1

2. **Proposal Recommends:** *(check one)* ☐ **new text** ☐ **revised text** ☒ **deleted text**

3. **Proposal.** *(Include proposed new or revised wording, or identification of wording to be deleted.)* Note: Proposed text should be in legislative format, that is, use underscore to denote wording to be inserted (inserted wording) and strike-through to denote wording to be deleted (~~deleted wording~~). Delete exception.

4. **Statement of Problem and Substantiation for Proposal.** Note: State the problem that will be resolved by your recommendation. Give the specific reason for your proposal including copies of tests, research papers, fire experience, etc. If more than 200 words, it may be abstracted for publication. A properly installed and maintained system should be free of ground faults. The occurrence of one or more ground faults should be required to cause a "trouble" signal because it indicates a condition that could contribute to future malfunction of the system. Ground fault protection has been widely available on these systems for years and its cost is negligible. Requiring it on all systems will promote better installations, maintenance and reliability.

5. ☒ **This Proposal is Original Material.** Note: Original material is considered to be the submitter's own idea based on or as a result of his/her own experience, thought, or research and, to the best of his/her knowledge, is not copied from another source.

   ☐ **This Proposal is Not Original Material; Its Source** ***(if known)*** **is as Follows:** _____

Sample

I hereby grant the NFPA all and full rights in copyright to this proposal, and I understand that I acquire no rights in any publication of NFPA in which this proposal in this or another similar or analogous form is used.

Signature ***(Required)*** John B. Smith

PLEASE USE SEPARATE FORM FOR EACH PROPOSAL • NFPA FAX (617) 770-3500

Mail to: Secretary, Standards Council • NFPA • 1 Batterymarch Park • PO Box 9101 • Quincy, MA 02269-9101

Copyright National Fire Protection Association
Provided by IHS under license with NFPA
No reproduction or networking permitted without license from IHS
Not for Resale

NFPA Technical Committee Document Proposal Form

Note: All proposals must be received by 5:00 p.m. EST/EDST on the published proposal closing date.

For further information on the standards-making process, please contact Codes and Standards Administration at 617-984-7249. For technical assistance, please call NFPA at 617-770-3000.

FOR OFFICE USE ONLY
Log #: _____
Date Rec'd: _____

Please indicate in which format you wish to receive your ROP/ROC: ☐ **CD ROM** ☐ **paper** ☐ **download**
(Note: In choosing the download option you intend to view the ROP/ROC from our Website. No copy will be sent to you.)

Date _____ **Name** _____ **Telephone** _____
Company _____
Address _____ **City** _____ **State** _____ **Zip** _____
Please indicate organization represented (if any) _____

1. **a) NFPA Document Title** _____
   b) NFPA No. & Edition _____ **c) Section/Paragraph** _____

2. **Proposal Recommends:** *(check one)* ☐ **new text** ☐ **revised text** ☐ **deleted text**

3. **Proposal.** *(Include proposed new or revised wording, or identification of wording to be deleted.)* Note: Proposed text should be in legislative format, that is, use underscore to denote wording to be inserted (inserted wording) and strike-through to denote wording to be deleted (~~deleted wording~~). _____

4. **Statement of Problem and Substantiation for Proposal.** Note: State the problem that will be resolved by your recommendation. Give the specific reason for your proposal including copies of tests, research papers, fire experience, etc. If more than 200 words, it may be abstracted for publication. _____

5. ☐ **This Proposal is Original Material.** Note: Original material is considered to be the submitter's own idea based on or as a result of his/her own experience, thought, or research and, to the best of his/her knowledge, is not copied from another source.

   ☐ **This Proposal is Not Original Material; Its Source *(if known)* is as Follows:** _____

I hereby grant the NFPA all and full rights in copyright to this proposal, and I understand that I acquire no rights in any publication of NFPA in which this proposal in this or another similar or analogous form is used.

Signature *(Required)* _____

PLEASE USE SEPARATE FORM FOR EACH PROPOSAL • NFPA FAX (617) 770-3500

Mail to: Secretary, Standards Council • NFPA • 1 Batterymarch Park • PO Box 9101 • Quincy, MA 02269-9101

--`,,`,,`-`-`,,`,,`,`,,`---

Copyright National Fire Protection Association
Provided by IHS under license with NFPA
No reproduction or networking permitted without license from IHS

Not for Resale