NFPA 221

Standard for High Challenge Fire Walls, Fire Walls, and Fire Barrier Walls

2006 Edition

NFPA, 1 Batterymarch Park, Quincy, MA 02169-7471
An International Codes and Standards Organization

Copyright National Fire Protection Association
Provided by IHS under license with NFPA
No reproduction or networking permitted without license from IHS
Not for Resale

IMPORTANT NOTICES AND DISCLAIMERS CONCERNING NFPA DOCUMENTS

NOTICE AND DISCLAIMER OF LIABILITY CONCERNING THE USE OF NFPA DOCUMENTS

NFPA codes, standards, recommended practices, and guides, of which the document contained herein is one, are developed through a consensus standards development process approved by the American National Standards Institute. This process brings together volunteers representing varied viewpoints and interests to achieve consensus on fire and other safety issues. While the NFPA administers the process and establishes rules to promote fairness in the development of consensus, it does not independently test, evaluate, or verify the accuracy of any information or the soundness of any judgments contained in its codes and standards.

The NFPA disclaims liability for any personal injury, property or other damages of any nature whatsoever, whether special, indirect, consequential or compensatory, directly or indirectly resulting from the publication, use of, or reliance on this document. The NFPA also makes no guaranty or warranty as to the accuracy or completeness of any information published herein.

In issuing and making this document available, the NFPA is not undertaking to render professional or other services for or on behalf of any person or entity. Nor is the NFPA undertaking to perform any duty owed by any person or entity to someone else. Anyone using this document should rely on his or her own independent judgment or, as appropriate, seek the advice of a competent professional in determining the exercise of reasonable care in any given circumstances.

The NFPA has no power, nor does it undertake, to police or enforce compliance with the contents of this document. Nor does the NFPA list, certify, test or inspect products, designs, or installations for compliance with this document. Any certification or other statement of compliance with the requirements of this document shall not be attributable to the NFPA and is solely the responsibility of the certifier or maker of the statement.

--`,,```,,-`-`,,`,,`,`,,`---
Copyright National Fire Protection Association
Provided by IHS under license with NFPA
No reproduction or networking permitted without license from IHS
Not for Resale

ADDITIONAL NOTICES AND DISCLAIMERS

Updating of NFPA Documents

Users of NFPA codes, standards, recommended practices, and guides should be aware that these documents may be superseded at any time by the issuance of new editions or may be amended from time to time through the issuance of Tentative Interim Amendments. An official NFPA document at any point in time consists of the current edition of the document together with any Tentative Interim Amendments and any Errata then in effect. In order to determine whether a given document is the current edition and whether it has been amended through the issuance of Tentative Interim Amendments or corrected through the issuance of Errata, consult appropriate NFPA publications such as the National Fire Codes® Subscription Service, visit the NFPA website at www.nfpa.org, or contact the NFPA at the address listed below.

Interpretations of NFPA Documents

A statement, written or oral, that is not processed in accordance with Section 6 of the Regulations Governing Committee Projects shall not be considered the official position of NFPA or any of its Committees and shall not be considered to be, nor be relied upon as, a Formal Interpretation.

Patents

The NFPA does not take any position with respect to the validity of any patent rights asserted in connection with any items which are mentioned in or are the subject of NFPA codes, standards, recommended practices, and guides, and the NFPA disclaims liability for the infringement of any patent resulting from the use of or reliance on these documents. Users of these documents are expressly advised that determination of the validity of any such patent rights, and the risk of infringement of such rights, is entirely their own responsibility.

NFPA adheres to applicable policies of the American National Standards Institute with respect to patents. For further information contact the NFPA at the address listed below.

Law and Regulations

Users of these documents should consult applicable federal, state, and local laws and regulations. NFPA does not, by the publication of its codes, standards, recommended practices, and guides, intend to urge action that is not in compliance with applicable laws, and these documents may not be construed as doing so.

Copyrights

This document is copyrighted by the NFPA. It is made available for a wide variety of both public and private uses. These include both use, by reference, in laws and regulations, and use in private self-regulation, standardization, and the promotion of safe practices and methods. By making this document available for use and adoption by public authorities and private users, the NFPA does not waive any rights in copyright to this document.

Use of NFPA documents for regulatory purposes should be accomplished through adoption by reference. The term "adoption by reference" means the citing of title, edition, and publishing information only. Any deletions, additions, and changes desired by the adopting authority should be noted separately in the adopting instrument. In order to assist NFPA in following the uses made of its documents, adopting authorities are requested to notify the NFPA (Attention: Secretary, Standards Council) in writing of such use. For technical assistance and questions concerning adoption of NFPA documents, contact NFPA at the address below.

For Further Information

All questions or other communications relating to NFPA codes, standards, recommended practices, and guides and all requests for information on NFPA procedures governing its codes and standards development process, including information on the procedures for requesting Formal Interpretations, for proposing Tentative Interim Amendments, and for proposing revisions to NFPA documents during regular revision cycles, should be sent to NFPA headquarters, addressed to the attention of the Secretary, Standards Council, NFPA, 1 Batterymarch Park, P.O. Box 9101, Quincy, MA 02269-9101.

For more information about NFPA, visit the NFPA website at www.nfpa.org.

--`,,```,-`-`,,`,,`,`,,`---
Copyright National Fire Protection Association
Provided by IHS under license with NFPA
No reproduction or networking permitted without license from IHS
Not for Resale

Copyright © 2005, National Fire Protection Association, All Rights Reserved

NFPA 221

Standard for

High Challenge Fire Walls, Fire Walls, and Fire Barrier Walls

2006 Edition

This edition of NFPA 221, *Standard for High Challenge Fire Walls, Fire Walls, and Fire Barrier Walls*, was prepared by the Technical Committee on Building Construction and acted on by NFPA at its June Association Technical Meeting held June 6–10, 2005, in Las Vegas, NV. It was issued by the Standards Council on July 29, 2005, with an effective date of August 18, 2005, and supersedes all previous editions.

This edition of NFPA 221 was approved as an American National Standard on August 18, 2005.

Origin and Development of NFPA 221

The Technical Committee on Building Construction undertook a project to develop a new document to govern fire walls in 1991. At the time, no standard existed to assist code authorities, architects, or engineers on the criteria that were necessary to properly design and construct a fire wall. The first edition of NFPA 221 was issued in 1994. It contained information on various types of fire walls including basic design criteria, proper protection of penetrations, and special design practices for exterior protection features.

The 1997 edition of NFPA 221 contained several changes, including the addition of specific criteria for treatment of seismic separation assemblies, additional criteria for proper protection of raceway penetrations, and the addition of several suggested protection schemes for properly protecting an egress door located in a fire wall.

The 2000 edition addressed specific testing criteria for performance of rated assemblies that included expansion, seismic, and control joints in fire wall and fire barrier wall assemblies. In addition, a second test protocol was recognized for tests of through penetrations.

The 2006 edition introduces two distinct types of fire walls. Presented in Chapter 5, the "high challenge fire wall" requirements are an evolution of the fire wall requirements found in the last edition of NFPA 221, while the "fire wall" requirements presented in Chapter 6 are based upon the requirements found in the 2003 edition of *NFPA 5000®, Building Construction and Safety Code®*. Chapter 4 of this document now contains extracts from *NFPA 5000*, Chapter 8, on such topics as analytical methods, ducts and air-transfer openings, joints, opening protectives, and penetrations. Please note these extracts have been stylistically adjusted to reflect this document's exclusive focus on walls by eliminating references to floors, floor-ceiling assemblies, smoke dampers, and partitions.

Copyright National Fire Protection Association
Provided by IHS under license with NFPA
No reproduction or networking permitted without license from IHS
Not for Resale

Technical Committee on Building Construction

Peter J. Willse, *Chair*
GE Global Asset Protection Services, CT [I]
Rep. GE Global Asset Protection Services

Bonnie Manley, *Nonvoting Secretary*
National Fire Protection Association, MA

Peter J. Barbadoro, FireSmart Building Technology Incorporated, MA [IM]
Jesse J. Beitel, Hughes Associates, Incorporated, MD [SE]
Robert M. Berhinig, Underwriters Laboratories Incorporated, IL [RT]
David S. Collins, The Preview Group, Incorporated, OH [SE]
Rep. American Institute of Architects
Richard J. Davis, FM Global, MA [I]
Alan J. Dopart, Willis of New Jersey, NJ [I]
Victor L. Dubrowski, Code Consultants, Incorporated, MO [SE]
Bruce A. Edwards, Liberty Mutual Property, MA [I]
Rep. Property Casualty Insurers Association of America
Byron (BJ) Foster, State of California, CA [E]
David Frable, U.S. General Services Administration, IL [U]
Sam W. Francis, American Forest & Paper Association, PA [M]
Daniel F. Gemeny, The RJA Group, Incorporated, CA [SE]
Joseph T. Holland, III, Hoover Treated Wood Products, Incorporated, FL [M]
Gerald Kelliher, Westinghouse Savannah River Company, SC [U]
Kevin J. Kelly, National Fire Sprinkler Association, NY [M]
Joseph J. Messersmith, Jr., Portland Cement Association, VA [M]
Kathleen Reid, Intel Corporation, NM [U]
Rep. Semiconductor Industry Association
Sarah A. Rice, Schirmer Engineering Corporation, OH [I]
Brad Schiffer, Brad Schiffer/Taxis, Incorporated, FL [SE]
Robert A. Wessel, Gypsum Association, DC [M]
Robert J. Wills, American Iron and Steel Institute, AL [M]

Alternates

Robert G. Backstrom, Underwriters Laboratories Incorporated, IL [RT]
(Alt. to R. M. Berhinig)
Brenda L. Bronson, U.S. General Services Administration, CO [U]
(Alt. to D. Frable)
Michael A. Gardner, Gypsum Association, DC [M]
(Alt. to R. A. Wessel)
William E. Koffel, Koffel Associates, Incorporated, MD [U]
(Alt. to K. Reid)
Renato R. Molina, The RJA Group, Incorporated, FL [SE]
(Alt. to D. F. Gemeny)
Dennis L. Pitts, American Forest & Paper Association, TX [M]
(Alt. to S. W. Francis)
Stephen V. Skalko, Portland Cement Association, GA [M]
(Alt. to J. J. Messersmith)
Rick Thornberry, The Code Consortium, Incorporated, CA [M]
(Voting Alt. to W.R. Grace Rep.)
Robert B. Treiber, National Fire Sprinkler Association, OH [M]
(Alt. to K. J. Kelly)
Ronald R. Walker, Charlevoix, MI [M]
(Alt. to J. T. Holland, III)

Bonnie E. Manley, NFPA Staff Liaison

This list represents the membership at the time the Committee was balloted on the final text of this edition. Since that time, changes in the membership may have occurred. A key to classifications is found at the back of the document.

NOTE: Membership on a committee shall not in and of itself constitute an endorsement of the Association or any document developed by the committee on which the member serves.

Committee Scope: This Committee shall have primary responsibility for documents on the selection and design of types of building construction, exterior walls, building height and area, fire walls, and fire barrier walls, as they relate to the protection of life and property from fire. For the processing of *NFPA 5000,* Chapter 7, and Sections 8.3 and 8.4, this Committee reports directly to the *NFPA 5000* TCC; whereas, for the processing of NFPA 220 and NFPA 221, this Committee does not report to the *NFPA 5000* TCC.

--`,,```,,-`-`,,`,,`,`,,`---

Copyright National Fire Protection Association
Provided by IHS under license with NFPA
No reproduction or networking permitted without license from IHS
Not for Resale

Contents

Chapter 1 Administration **221**– 4
1.1 Scope **221**– 4
1.2 Purpose **221**– 4
1.3 Application **221**– 4
1.4 Retroactivity **221**– 4
1.5 Equivalency **221**– 4
1.6 Units **221**– 4

Chapter 2 Referenced Publications **221**– 4
2.1 General **221**– 4
2.2 NFPA Publications **221**– 4
2.3 Other Publications **221**– 4
2.4 References for Extracts in Mandatory Sections **221**– 5

Chapter 3 Definitions **221**– 5
3.1 General **221**– 5
3.2 NFPA Official Definitions **221**– 5
3.3 General Definitions **221**– 5

Chapter 4 General Requirements **221**– 6
4.1 Scope **221**– 6
4.2 Design Loads **221**– 6
4.3 Fire Resistance Ratings **221**– 6
4.4 Ducts and Air-Transfer Openings **221**– 6
4.5 Double Wall Assemblies **221**– 7
4.6 Impact Damage **221**– 7
4.7 Joints **221**– 7
4.8 Opening Protectives **221**– 8
4.9 Penetrations **221**– 8

Chapter 5 High Challenge Fire Walls **221**– 9
5.1 Scope **221**– 9
5.2 Structural Stability **221**– 9
5.3 Cantilevered HC Fire Walls **221**– 9
5.4 Tied HC Fire Walls **221**–10
5.5 Double HC Fire Walls **221**–10
5.6 HC Fire Walls at Elevation Differences **221**–10
5.7 Clearance **221**–10
5.8 Opening Protectives **221**–10
5.9 Penetrations in HC Fire Walls **221**–10
5.10 Ducts and Air Transfer Openings **221**–11
5.11 High Hazard Materials **221**–11
5.12 Parapets **221**–11
5.13 Roof Surface Protection **221**–11
5.14 Roof Structures **221**–11
5.15 Roof Penetrations **221**–11
5.16 Horizontal Continuity **221**–11

Chapter 6 Fire Walls **221**–13
6.1 Scope **221**–13
6.2 Structural Stability **221**–13
6.3 Cantilevered Fire Walls **221**–13
6.4 Tied Fire Walls **221**–13
6.5 Double Fire Walls **221**–13
6.6 Fire Wall Termination **221**–13
6.7 Fire Walls with Elevation Differences **221**–14
6.8 Clearance **221**–14
6.9 Horizontal Continuity **221**–14
6.10 Opening Protectives **221**–15

Chapter 7 Fire Barrier Walls **221**–15
7.1 Scope **221**–15
7.2 Continuity **221**–15
7.3 Opening Protectives **221**–15

Annex A Explanatory Material **221**–15

Annex B Informational References **221**–23

Index **221**–25

Copyright National Fire Protection Association
Provided by IHS under license with NFPA
No reproduction or networking permitted without license from IHS
Not for Resale

NFPA 221

Standard for

High Challenge Fire Walls, Fire Walls, and Fire Barrier Walls

2006 Edition

IMPORTANT NOTE: This NFPA document is made available for use subject to important notices and legal disclaimers. These notices and disclaimers appear in all publications containing this document and may be found under the heading "Important Notices and Disclaimers Concerning NFPA Documents." They can also be obtained on request from NFPA or viewed at www.nfpa.org/disclaimers.

NOTICE: An asterisk (*) following the number or letter designating a paragraph indicates that explanatory material on the paragraph can be found in Annex A.

A reference in brackets [ ] following a section or paragraph indicates material that has been extracted from another NFPA document. As an aid to the user, the complete title and edition of the source documents for extracts in mandatory sections of the document are given in Chapter 2 and those for extracts in informational sections are given in Annex B. Editorial changes to extracted material consist of revising references to an appropriate division in this document or the inclusion of the document number with the division number when the reference is to the original document. Requests for interpretations or revisions of extracted text shall be sent to the technical committee responsible for the source document.

Information on referenced publications can be found in Chapter 2 and Annex B.

Chapter 1 Administration

1.1 Scope. This standard specifies requirements for the design and construction of high challenge fire walls, fire walls, and fire barrier walls including protection of openings and penetrations.

1.2 Purpose. This standard prescribes minimum requirements for the design and construction of high challenge fire walls, fire walls, and fire barrier walls for use in providing safety to life and protection of property from fire.

1.3 Application. The minimum requirements for high challenge fire walls, fire walls, and fire barrier walls apply to walls that are required to separate buildings or subdivide a building to prevent the spread of fire. The minimum fire resistance rating of a wall assembly is outside the scope of this document.

1.4 Retroactivity.

1.4.1 The provisions of this standard reflect a consensus of what is necessary to provide an acceptable degree of protection from the hazards addressed in this standard at the time the standard was issued.

1.4.2 Unless otherwise specified, the provisions of this standard shall not apply to facilities, equipment, structures, or installations that existed or were approved for construction or installation prior to the effective date of the standard.

1.4.3 In those cases where the authority having jurisdiction determines that the existing situation presents an unacceptable degree of risk, the authority having jurisdiction shall be permitted to apply retroactively any portions of this standard deemed appropriate.

1.5 Equivalency.

1.5.1 Nothing in this standard is intended to prevent the use of systems, methods, or devices of equivalent or superior quality, strength, fire resistance, effectiveness, durability, and safety over those prescribed by this standard.

1.5.2 Technical documentation shall be submitted to the authority having jurisdiction to demonstrate equivalency. The system, method, or device shall be approved for the intended purpose by the authority having jurisdiction.

1.6 Units.

1.6.1 SI Units. Metric units in this standard are in accordance with the modernized metric system known as the International System of Units (SI).

1.6.2 Primary and Equivalent Values. If a value for a measurement as given in this standard is followed by an equivalent value in other units, the first stated value shall be regarded as the requirement. A given equivalent value might be approximate.

Chapter 2 Referenced Publications

2.1 General. The documents or portions thereof listed in this chapter are referenced within this standard and shall be considered part of the requirements of this document.

2.2 NFPA Publications. National Fire Protection Association, 1 Batterymarch Park, Quincy, MA 02169-7471.

NFPA 13, *Standard for the Installation of Sprinkler Systems,* 2002 edition.

NFPA 13R, *Standard for the Installation of Sprinkler Systems in Residential Occupancies up to and Including Four Stories in Height,* 2002 edition.

NFPA 72®, National Fire Alarm Code®, 2002 edition.

NFPA 80, *Standard for Fire Doors and Fire Windows,* 1999 edition.

NFPA 90A, *Standard for the Installation of Air-Conditioning and Ventilating Systems,* 2002 edition.

NFPA 90B, *Standard for the Installation of Warm Air Heating and Air-Conditioning Systems,* 2006 edition.

NFPA 220, *Standard on Types of Building Construction,* 2006 edition.

NFPA 251, *Standard Methods of Tests of Fire Resistance of Building Construction and Materials,* 2006 edition.

NFPA 252, *Standard Methods of Fire Tests of Door Assemblies,* 2003 edition.

NFPA 257, *Standard on Fire Test for Window and Glass Block Assemblies,* 2000 edition.

2.3 Other Publications.

2.3.1 ACI Publication. American Concrete Institute, P.O. Box 9094, Farmington Hills, MI 48333.

ACI 216.1/TMS 0216.1, *Standard Method for Determining Fire Resistance of Concrete and Masonry Assemblies,* 1997.

Copyright National Fire Protection Association
Provided by IHS under license with NFPA
No reproduction or networking permitted without license from IHS
Not for Resale

2.3.2 ASCE Publications. American Society of Civil Engineers, 1801 Alexander Bell Drive, Reston, VA 20191-4400.

ASCE/SEI 7, *Minimum Design Loads for Buildings and Other Structures,* 2005 with Supplement 1.

ASCE/SFPE 29, *Standard Calculation Methods for Structural Fire Protection,* 2005.

2.3.3 ASTM Publications. American Society for Testing and Materials, 100 Barr Harbor Drive, West Conshohocken, PA 19428-2959.

ASTM E 119, *Standard Test Methods for Fire Tests of Building Construction and Materials*, 2000a.

ASTM E 814, *Standard Test Method for Fire Tests of Through-Penetration Fire Stops*, 2002.

ASTM E 1966, *Standard Test Method for Fire-Resistive Joint Systems*, 2001.

2.3.4 SPRI Publication. Single Ply Roofing Industry (SPRI), 77 Rumford Avenue, Suite 3B, Waltham, MA 02453.

ANSI/SPRI RP-4, *Wind Design Standard for Ballasted Single-Ply Roofing Systems,* 2002.

2.3.5 UL Publications. Underwriters Laboratories Inc., 333 Pfingsten Road, Northbrook, IL 60062-2096.

ANSI/UL 10C, *Standard for Positive Pressure Fire Tests of Door Assemblies*, 2001.

ANSI/UL 263, *Standard for Fire Tests of Building Construction and Materials*, 2003.

ANSI/UL 555, *Standard for Fire Dampers*, 1999, Revised 2002.

ANSI/UL 1479, *Standard for Fire Tests of Through-Penetration Firestops*, 2003.

ANSI/UL 2079, *Standard for Tests for Fire Resistance of Building Joint Systems*, 2004.

2.3.6 Other Publication.

Merriam-Webster's Collegiate Dictionary, 11th edition, Merriam-Webster, Inc., Springfield, MA, 2003.

2.4 References for Extracts in Mandatory Sections.

NFPA 5000®, Building Construction and Safety Code®, 2006 edition.

Chapter 3 Definitions

3.1 General. The definitions contained in this chapter shall apply to the terms used in this standard. Where terms are not defined in this chapter or within another chapter, they shall be defined using their ordinarily accepted meanings within the context in which they are used. *Merriam-Webster's Collegiate Dictionary,* 11th edition, shall be the source for the ordinarily accepted meaning.

3.2 NFPA Official Definitions.

3.2.1* Approved. Acceptable to the authority having jurisdiction.

3.2.2* Authority Having Jurisdiction (AHJ). An organization, office, or individual responsible for enforcing the requirements of a code or standard, or for approving equipment, materials, an installation, or a procedure.

3.2.3* Listed. Equipment, materials, or services included in a list published by an organization that is acceptable to the authority having jurisdiction and concerned with evaluation of products or services, that maintains periodic inspection of production of listed equipment or materials or periodic evaluation of services, and whose listing states that either the equipment, material, or service meets appropriate designated standards or has been tested and found suitable for a specified purpose.

3.2.4 Shall. Indicates a mandatory requirement.

3.2.5 Should. Indicates a recommendation or that which is advised but not required.

3.2.6 Standard. A document, the main text of which contains only mandatory provisions using the word "shall" to indicate requirements and which is in a form generally suitable for mandatory reference by another standard or code or for adoption into law. Nonmandatory provisions shall be located in an appendix or annex, footnote, or fine-print note and are not to be considered a part of the requirements of a standard.

3.3 General Definitions.

3.3.1 Contents.

3.3.1.1 ***Low Hazard Contents.*** Contents of such low combustibility that no self-propagating fire therein can occur. [***5000,*** 2006]

3.3.1.2 ***Ordinary Hazard Contents.*** Contents that are likely to burn with moderate rapidity or to give off a considerable volume of smoke. [***5000,*** 2006]

3.3.2 Damper.

3.3.2.1 ***Combination Fire and Smoke Damper.*** A device that meets both the fire damper and smoke damper requirements. [***5000,*** 2006]

3.3.2.2* ***Fire Damper.*** A device, installed in an air-distribution system, that is designed to close automatically upon detection of heat to interrupt migratory airflow and to restrict the passage of flame. [***5000,*** 2006]

3.3.2.3 ***Smoke Damper.*** A device within an air-distribution system to control the movement of smoke. [***5000,*** 2006]

3.3.3 Element.

3.3.3.1 ***Load-Bearing Element.*** Any column, girder, beam, joist, truss, rafter, wall, floor, or roof sheathing that supports any vertical load in addition to its own weight, or any lateral load. [***5000,*** 2006]

3.3.3.2 ***Structural Element.*** The columns and girders, beams, trusses, joists, braced frames, moment-resistant frames, and vertical and lateral resisting elements, and other framing members that are designed to carry any portion of the dead or live load and lateral forces, that are essential to the stability of the building or structure. [***5000,*** 2006]

3.3.4 Fire Protection Rating. The designation indicating the duration of the fire test exposure to which a fire door assembly or fire window assembly was exposed and for which it met all the acceptance criteria as determined in accordance with NFPA 252 or NFPA 257, respectively. [***5000,*** 2006]

3.3.5* Fire Resistance Rating. The time, in minutes or hours, that materials or assemblies have withstood a fire exposure as determined by the tests, or methods based on tests, prescribed by this standard. [***5000,*** 2006]

Copyright National Fire Protection Association
Provided by IHS under license with NFPA
No reproduction or networking permitted without license from IHS
Not for Resale

3.3.6 Firestop. A specific system, device, or construction consisting of the materials that fill the openings around penetrating items such as cables, cable trays, conduits, ducts, pipes, and their means of support through the wall or floor openings to prevent the spread of fire. [***5000,*** 2006]

3.3.7 Footing. Part of the foundation of a structure that spreads and transmits the load direct to the soil or to piles. [***5000,*** 2006]

3.3.8 High Hazard Materials. Materials that are combustible or flammable liquids, flammable gases, and combustible dusts.

3.3.9 Penetration.

3.3.9.1* *Membrane Penetration.* An opening for penetrations made through one side of a fire resistance–rated assembly. [***5000,*** 2006]

3.3.9.2* *Through-Penetration.* An opening for penetrations that pass through both sides of a vertical or horizontal fire resistance–rated assembly. [***5000,*** 2006]

3.3.10 Smoke Barrier. A continuous membrane, or a membrane with discontinuities created by protected openings, where such membrane is designed and constructed to restrict the movement of smoke. [***5000,*** 2006]

3.3.11 Structural Frame. Frame composed of individual members of a building or structure required to transmit loads to the ground. [***5000,*** 2006]

3.3.12 Wall.

3.3.12.1 *Angle Wall.* An exterior wall that intersects with a high challenge fire wall at an angle of 135 degrees or less at the end of the high challenge fire wall. *(See Figure 5.16.3.1).*

3.3.12.2 *Bearing Wall.* Any wall meeting either of the following classifications: (1) any metal or wood stud wall that supports more than 100 lb/linear ft (1400 N/linear m) of vertical load in addition to its own weight or (2) any concrete or masonry wall that supports more than 200 lb/linear ft (2800 N/linear m) of vertical load in addition to its own weight. [**ASCE/SEI 7,** 2005]

3.3.12.3 *Bearing Wall System.* A structural system with bearing walls providing support for all or major portions of the vertical loads. Shear walls or braced frames provide seismic force resistance. [**ASCE/SEI 7,** 2005]

3.3.12.4 *End Wall.* An exterior wall that intersects with a high challenge fire wall at an exterior angle of more than 135 degrees at the end of the high challenge fire wall. *(See Figure 5.16.2.1(a), Figure 5.16.2.1(b), and Figure 5.16.2.3.)*

3.3.12.5 *Fire Barrier Wall.* A wall, other than a fire wall, having a fire resistance rating.

3.3.12.6* *Fire Wall.* A wall separating buildings or subdividing a building to prevent the spread of fire and having a fire resistance rating and structural stability.

3.3.12.7 *High Challenge Fire Wall.* A wall used to separate buildings or subdivide a building with high fire challenge occupancies, having enhanced fire resistance ratings and enhanced appurtenance protection to prevent the spread of fire, and having structural stability.

3.3.12.8 *Nonbearing Wall.* Any wall that is not a bearing wall. [**ASCE/SEI 7,** 2005]

Chapter 4 General Requirements

4.1 Scope. The provisions of this chapter apply to high challenge (HC) fire walls, fire walls, and fire barrier walls unless modified by provisions of Chapters 5, 6, or 7, respectively, and shall hereafter in this chapter be referred to as walls.

4.2* Design Loads. All walls and their supports shall be designed for loads in accordance with ASCE/SEI 7 and to withstand a minimum uniform load of 5 lbf/ft^2 (0.24 kPa) from either direction applied perpendicular to the face of the wall.

4.3 Fire Resistance Ratings.

4.3.1 The fire resistance rating of assemblies shall be determined in accordance with NFPA 251, ASTM E 119, or ANSI/UL 263, or other approved test methods or analytical methods in accordance with 4.3.2.

4.3.2 Analytical Methods. [***5000:***8.2.3]

4.3.2.1 General. Analytical methods utilized to determine the fire resistance rating of building assemblies shall comply with 4.3.2.2 or 4.3.2.3. [***5000:***8.2.3.1]

4.3.2.2* Calculations. [***5000:***8.2.3.2]

4.3.2.2.1 Where calculations are used to establish the fire resistance rating of structural elements or assemblies, they shall be permitted to be performed in accordance with ASCE/SFPE 29. [***5000:***8.2.3.2.1].

4.3.2.2.2 Where calculations are used to establish the fire resistance rating of concrete or masonry elements or assemblies, the provisions of ACI 216.1/TMS 0216.1 shall be permitted to be used. [***5000:***8.2.3.2.2]

4.3.2.3 Methods. [***5000:***8.2.3.3]

4.3.2.3.1 Except for the method specified in 4.3.2.2, analytical methods used to calculate the fire resistance rating of building assemblies or structural elements shall be approved. [***5000:***8.2.3.3.1]

4.3.2.3.2 Where an approved analytical method is utilized to establish the fire resistance rating of a structural element or building assembly, the calculations shall be based on the fire exposure and acceptance criteria specified in NFPA 251. [***5000:***8.2.3.3.2]

4.4 Ducts and Air-Transfer Openings. [***5000:***8.8.8]

4.4.1 General. The provisions of Section 4.4 shall govern the materials and methods of construction used to protect ducts and air-transfer openings in walls. [***5000:***8.8.8.1]

4.4.2* Fire Damper Requirements. Fire dampers shall be installed to protect ducts and air-transfer openings that penetrate walls as required by other sections of the applicable building code. [***5000:***8.8.8.2]

4.4.2.1 Fire dampers shall be designed and tested in accordance with the requirements of UL 555 and shall have the minimum fire protection rating specified in Table 4.4.2.1 for the rating of the assembly penetrated. [***5000:***8.8.8.2.1]

4.4.2.2 In systems where fans continue to operate in the emergency mode, dynamic fire dampers shall be required. [***5000:***8.8.8.2.2]

Copyright National Fire Protection Association
Provided by IHS under license with NFPA
No reproduction or networking permitted without license from IHS
Not for Resale

Table 4.4.2.1 Fire Damper Rating

Fire Resistance Rating of Wall Assembly	Minimum Damper Rating (hr)
3-hr or greater fire resistance–rated assemblies	3
Less than 3-hr fire resistance–rated assemblies	1½

[*5000:* Table 8.8.8.2.1]

4.4.2.3 Fire dampers shall be required in the following locations:

(1) Ducts and air-transfer openings penetrating walls or partitions having a fire resistance rating of 2 or more hours
(2) Ducts and air-transfer openings penetrating shaft walls having a fire resistance rating of 1 or more hours
(3) Air-transfer openings that occur in walls or partitions that are required to have a fire-resistive rating of 30 minutes or more [*5000:*8.8.8.2.3]

4.4.2.4 Fire dampers shall not be required in the following locations:

(1) In a duct system serving only one floor and used only for exhaust of air to the outside and not penetrating a wall having a required fire resistance rating of 2 hours or more or passing entirely through the system and contained within its own dedicated shaft
(2) Where branch ducts connect to enclosed exhaust risers in which the airflow is upward, and steel subducts at least 22 in. (560 mm) in length are carried up inside the riser at each inlet [*5000:*8.8.8.2.4]

4.4.3 Installation. [*5000:*8.8.8.3]

4.4.3.1 Air-conditioning, heating, and ventilating ductwork and related equipment, including fire dampers, smoke dampers, combination fire and smoke dampers, and ceiling radiation dampers, shall be installed in accordance with NFPA 90A or NFPA 90B, where applicable. [*5000:*8.8.8.3.1]

4.4.3.2 The equipment specified in 4.4.3.1 shall be installed in accordance with the requirements of Section 4.4, the manufacturer's installation instructions, its listing, and the applicable mechanical code. [*5000:*8.8.8.3.2]

4.4.4 Access and Identification. Fire dampers shall be provided with an approved means of access, as follows:

(1) The means of access shall be large enough to allow inspection and maintenance of the damper and its operating parts.
(2) The access shall not affect the integrity of fire resistance–rated assemblies.
(3) The access openings shall not reduce the fire resistance rating of the assembly.
(4) Access points shall be permanently identified.
(5) Access doors in ducts shall be identified with a label having letters not less than ½ in. (13 mm) in height.
(6) The label shall read as follows in 4.4.4(6)(a) through 4.4.4(6)(c):
    (a) FIRE/SMOKE DAMPER
    (b) FIRE DAMPER
    (c) In an approved manner
(7) Access doors in ducts shall be tight-fitting and suitable for the required duct construction.
(8) Access and maintenance shall comply with the requirements of the mechanical code. [*5000:*8.8.8.4]

4.4.5* Fire Damper Actuation Device. The operating temperature of the heat-actuating device shall be approximately 50°F (27.8°C) above the normal temperature within the duct system, but not less than 160°F (71°C); or it shall be not more than 286°F (141°C) where located in a required smoke control system; or, where a combination fire and smoke damper is installed, it shall not exceed 350°F (177°C) where located in a smoke control system. [*5000:*8.8.8.5]

4.5* Double Wall Assemblies. Where either wall of a double wall is laterally supported by a building frame with a fire resistance rating less than that required for the wall, double wall assemblies shall be considered to have a combined assembly fire resistance rating as specified in Table 4.5.

Table 4.5 Fire Resistance Ratings for Double Wall Assemblies

Fire Resistance Rating of Each Wall (hr)	Equivalent to Single Wall (hr)
3	4
2	3
1	2

4.6* Impact Damage.

4.6.1 Where the wall is subject to impact damage from moving vehicles or the handling of merchandise or other activity, protection against impact damage shall be provided for an appropriate height but not less than 60 in. (1525 mm) from the finished floor.

4.6.2 Where the fire-protective covering of a structural element required to have a fire resistance rating by Section 5.4 or Section 6.4 is subject to impact damage from moving vehicles, the handling of merchandise, or other activity, protection against impact damage shall be provided for an appropriate height but not less than 60 in. (1525 mm) from the finished floor.

4.7* Joints. The provisions of Section 4.7 shall govern the materials and methods of construction used to protect joints within or between walls in accordance with 4.7.1.

4.7.1 Joint System Required. [*5000:*8.9.2]

4.7.1.1 Joints made within or between fire resistance–rated assemblies shall be protected with a joint system that is designed and tested to prevent the spread of fire for a time period equal to that of the assembly in which the joint is located. [*5000:*8.9.2.1]

4.7.1.2 The materials, systems, or devices specified in 4.7.1.1 shall be tested as part of the assembly in accordance with the requirements of ASTM E 1966 or ANSI/UL 2079. [*5000:*8.9.2.2]

4.7.1.2.1 Testing of the joint system shall be representative of the actual installation. [*5000:*8.9.2.2.1]

4.7.1.2.2 All joint systems shall be tested at their maximum joint width in accordance with the requirements of ASTM E 1966 or ANSI/UL 2079 under a minimum positive pressure differential of 0.01 in. of water column (2.5 Pa) for a time period equal to that of the assembly. [*5000:*8.9.2.2.2]

Copyright National Fire Protection Association
Provided by IHS under license with NFPA
No reproduction or networking permitted without license from IHS
Not for Resale

4.7.1.2.3 All test specimens shall comply with the minimum height or length required by the standard. [***5000:***8.9.2.2.3]

4.7.1.2.4 Wall assemblies shall be subjected to a hose stream test in accordance with NFPA 251. [***5000:***8.9.2.2.4]

4.8 Opening Protectives.

4.8.1 Openings in walls shall be equipped with opening protectives.

4.8.2 Minimum Fire Protection Rating. Opening protectives shall have a minimum fire protection rating as specified in Table 4.8.2. [***5000:***8.7.2]

Table 4.8.2 Minimum Fire Protection Ratings for Opening Protectives in Fire Resistance–Rated Assemblies

Component	Fire Resistance Rating	Fire Protection Rating	
	Walls and Partitions (hr)	Fire Door Assemblies (hr)	Fire Window Assemblies (hr)
Elevator hoistways	2	1½	NP
	1	1	NP
Vertical shafts (including stairways, exit, and refuse chutes)	2	1½	NP
	1	1	NP
HC fire walls and fire walls	4	3*	NP
	3	3	NP
	2	1½	NP
Fire barrier	4	3	NP
	3	3	NP
	2	1½	NP
	1	¾	¾
Horizontal exit	2	1½	NP
Corridors, exit access	1	⅓	¾
	½	⅓	⅓

NP: Not permitted.
*See Sections 5.8 and 6.10.
[***5000:*** Table 8.7.2]

4.8.3 Fire Door Assemblies and Fire Window Assemblies. [***5000:***8.7.5]

4.8.3.1 Openings required to have a fire protection rating by Table 4.8.2 shall be protected by approved, listed, and labeled fire door assemblies and fire window assemblies and their accompanying hardware, including all frames, closing devices, anchorage and sills in accordance with the requirements of NFPA 80. [***5000:***8.7.5.1]

4.8.3.2 Fire protection ratings for products intended to comply with 4.8.3 shall be as determined and reported by a nationally recognized testing agency in accordance with NFPA 252 or NFPA 257. [***5000:***8.7.5.2]

4.8.3.2.1 NFPA 257 shall evaluate fire protection–rated glazing under positive pressure. [***5000:***8.7.5.2.1]

4.8.3.2.2 NFPA 252 or ANSI/UL 10C shall evaluate side-hinged or pivoted-swinging doors under positive pressure. [***5000:***8.7.5.2.2]

4.8.3.2.3 NFPA 252 shall evaluate doors, other than side-hinged or pivoted-swinging doors, with the neutral pressure plane no higher than the top of the door. [***5000:***8.7.5.2.3]

4.8.3.2.4 All fire door assemblies and fire window assemblies shall bear an approved label. [***5000***:8.7.5.2.4]

4.8.4* Fire Door Closers. [***5000:***8.7.3]

4.8.4.1 Unless otherwise specified, fire doors shall be self-closing or automatic closing. [***5000:***8.7.3.1]

4.8.4.2 Fire doors used to protect the means of egress shall be self-closing or automatic-closing in accordance with 4.8.4.2.1. [***5000:***8.7.3.2]

4.8.4.2.1 In any building of low or ordinary hazard contents, or where approved by the authority having jurisdiction, doors shall be permitted to be automatic-closing, provided that the following criteria are met:

(1) Upon release of the hold-open mechanism, the door becomes self-closing.
(2) The release device is designed so that the door instantly releases manually and, upon release, becomes self-closing, or the door can be readily closed.
(3) The automatic releasing mechanism or medium is activated by the operation of approved smoke detectors installed in accordance with the requirements for smoke detectors for door release service in *NFPA 72*.
(4) Upon loss of power to the hold-open device, the hold-open mechanism is released, and the door becomes self-closing.
(5) The release by means of smoke detection of one door in a stair enclosure results in closing all doors serving that stair. [***5000:***11.2.1.8.2]

4.8.4.3 Initiating Devices. Detection devices activating the closer shall conform to *NFPA 72*. [***5000:***8.7.4]

4.8.5 Use of Wired Glass. [***5000:***8.7.8]

4.8.5.1 Wired glass that is ¼ in. (6.3 mm) thick and labeled for fire protection purposes shall be permitted to be used in approved opening protectives, with the maximum sizes in accordance with their listing. [***5000:***8.7.8.1]

4.8.5.2 Other glazing materials that have been tested and labeled to indicate the type of opening to be protected for fire protection purposes shall be permitted to be used in approved opening protectives in accordance with their listing and with the maximum sizes tested. [***5000:***8.7.8.2]

4.8.6 Nonsymmetrical Glazing Systems. Nonsymmetrical fire protection–rated glazing systems shall be tested with each face exposed to the furnace, and the assigned fire protection rating shall be the shortest duration obtained from the two tests conducted in compliance with NFPA 257. [***5000:***8.7.11]

4.9 Penetrations.

4.9.1 General. The provisions of Section 4.9 shall govern the materials and methods of construction used to protect through-penetrations and membrane penetrations.

Copyright National Fire Protection Association
Provided by IHS under license with NFPA
No reproduction or networking permitted without license from IHS
Not for Resale

4.9.2 Firestop Systems and Devices Required. Penetrations for cables, cable trays, conduits, pipes, tubes, combustion vents and exhaust vents, wires, and similar items to accommodate electrical, mechanical, plumbing, and communications systems that pass through a wall shall be protected by a firestop system or device. [*5000:*8.8.2]

4.9.2.1 Testing. The firestop system or device shall be tested in accordance with ASTM E 814 or ANSI/UL 1479, under a minimum positive pressure differential of 0.01 in. of water column (2.5 Pa) between the exposed and the unexposed surface of the test assembly. [*5000:*8.8.2.1]

4.9.2.2 Alternative Requirements. [*5000:*8.8.2.2]

4.9.2.2.1 The requirements of 4.9.2 and 4.9.2.1 shall not apply where otherwise permitted by any one of the following:

(1)*Where penetrations are tested and installed as part of an assembly in accordance with the NFPA 251 rated assembly
(2) Where concrete, grout, or mortar has been used to fill the annular spaces around cast-iron, copper, or steel piping, or steel conduit or tubing, that penetrates one or more concrete or masonry walls. The nominal diameter of each penetrating item shall not exceed 6 in. (150 mm), the opening size shall not exceed 144 in.^{2} (92,909 mm^2), and the thickness of the concrete, grout, or mortar shall be the full thickness of the assembly. [*5000:*8.8.2.2.1]

4.9.2.3 F Ratings. Firestop systems and devices shall have an F rating of at least 1 hour, but not less than the required fire resistance rating of the wall penetrated. [*5000:*8.8.2.3]

4.9.3 Use of Sleeves for Penetration. Where the penetrating item uses a sleeve to penetrate the wall, the sleeve shall be securely set in the wall, and the space between the item and the sleeve shall be filled with a material that complies with 4.9.2 and 4.9.2.1. [*5000:*8.8.3]

4.9.4 Insulation Coverings. Insulation and coverings for penetrating items shall not pass through the wall unless the insulation or covering has been tested as part of the firestop system or device. [*5000:* 8.8.4]

4.9.5 Vibration Isolation. Where designs take transmission of vibrations into consideration, any vibration isolation shall meet one of the following conditions:

(1) It shall be made on either side of the wall.
(2) It shall be designed for the specific purpose. [*5000:*8.8.5]

4.9.6 Transitions. [*5000:*8.8.6]

4.9.6.1 Where piping penetrates a wall assembly, combustible piping shall not connect to noncombustible piping within 36 in. (915 mm) of the firestop system or device, unless it can be demonstrated that the transition will not reduce the fire resistance rating. [*5000:*8.8.6.1]

4.9.6.2 Unshielded couplings shall not be used to connect noncombustible piping to combustible piping, unless it can be demonstrated that the transition complies with the fire-resistive protection requirements of 4.9.2 and 4.9.2.1. [*5000:*8.8.6.2]

4.9.7 Membrane Penetrations. Membrane penetrations for cables, cable trays, conduits, pipes, tubes, combustion vents, exhaust vents, wires, and similar items to accommodate electrical, mechanical, plumbing, and communications systems that pass through a membrane of a wall assembly shall be protected by a firestop system or device, and shall comply with 4.9.2 through 4.9.6.2. [*5000:*8.8.7]

4.9.7.1 The firestop system or device shall be tested in accordance with ASTM E 814 or ANSI/UL 1479 under a minimum positive pressure differential of 0.01 in. of water column (2.5 Pa) between the exposed and the unexposed surface of the test assembly, unless one of the following criteria is met:

(1) Membrane penetrations for electrical outlet boxes and fittings, provided that such devices are listed for use in fire resistance–rated assemblies and are installed in accordance with their listing
(2) The annular space created by the membrane penetration of a fire sprinkler, provided that the space is covered by a metal escutcheon plate
[*5000:*8.8.7.1]

4.9.7.2 Where walls are required to have a fire resistance rating of not less than 1 hour, recessed fixtures shall be installed in the wall in such a manner that the required fire resistance is not reduced, unless one of the following criteria is met:

(1)*Any steel electrical box not exceeding 16 in.^{2} (10,300 mm^2) in area shall be permitted where the aggregate area of the openings provided for the boxes does not exceed 100 in.^{2} (64,520 mm^2) in any 100 ft^2 (9.3 m^2) of wall area, and where outlet boxes are installed on opposite sides of the wall, the boxes shall be separated by one of the following means:
  (a) By a horizontal distance of not less than 24 in. (610 mm)
  (b) By a horizontal distance of not less than the depth of the wall cavity where the wall cavity is filled with cellulose loose-fill, rock wool, or slag wool insulation
  (c) By solid fireblocking in accordance with the applicable building code
  (d) By other listed materials and methods
(2) Membrane penetrations for any listed electrical outlet box made of any material shall be permitted, provided such boxes have been tested for use in fire resistance–rated assemblies and are installed in accordance with the instructions included in the listing.
(3) The annular space created by the membrane penetration of a fire sprinkler shall be permitted, provided that the space is covered by a metal escutcheon plate. [*5000:* 8.8.7.2]

Chapter 5 High Challenge Fire Walls

5.1 Scope. High challenge (HC) fire walls shall meet the requirements of this chapter and Chapter 4 except as modified by this chapter.

5.2 Structural Stability.

5.2.1 HC fire walls shall be designed and constructed to remain stable after the collapse of the structure due to fire on either side of the wall.

5.2.2 HC fire walls constructed in compliance with the requirements of Section 5.3, 5.4, or 5.5 shall be deemed to provide the required stability.

5.2.3 HC fire walls shall be nonbearing.

5.2.4 Structural framing within the plane of the wall shall be permitted to be load-bearing.

5.3* Cantilevered HC Fire Walls. Cantilevered HC fire walls shall be entirely self-supported and nonbearing.

5.3.1 There shall be no connections to the building(s) or contents on either side other than to the flashing.

--`,,```,-`-`,,`,,`,`,,`---

Copyright National Fire Protection Association
Provided by IHS under license with NFPA
No reproduction or networking permitted without license from IHS
Not for Resale

5.3.2 Cantilevered HC fire walls shall be erected where there is a complete break in the structural framework.

5.4* Tied HC Fire Walls.

5.4.1 Placement. Tied HC fire walls shall be centered on a single column line or constructed between a double column line and shall be limited to one-story buildings.

5.4.2 Framework.

5.4.2.1 Structural framing on either side of the wall shall line up horizontally and vertically and shall support the roof.

5.4.2.2 The framework on each side of the HC fire wall shall be continuous or tied together through the wall.

5.4.2.3 The framework on each side shall be designed so that it resists the maximum lateral pull that can be developed due to framework collapse in a fire on the opposite side.

5.4.2.4 Tied HC fire walls shall be supported laterally by the building framework with flexible anchors.

5.4.3 Fire Resistance Rating.

5.4.3.1 Where centered on a single column line, structural framing at the column line shall have a fire resistance rating of not less than the required fire resistance rating of the HC fire wall.

5.4.3.2 Where the wall is installed between double column lines, structural framing along the first column line immediately on each side of the HC fire wall shall have a fire resistance rating of not less than the required fire resistance rating of the HC fire wall.

5.5* Double HC Fire Walls.

5.5.1 A double HC fire wall shall consist of two parallel walls.

5.5.2 There shall be no connections, other than to the flashing, between the walls.

5.5.3 Each wall that comprises a double HC fire wall shall be supported laterally by the building frame on its respective side and shall be independent of the other wall and framing on the opposite side.

5.6 HC Fire Walls at Elevation Differences. Where the roofs on opposite sides of an HC fire wall are not at the same elevation, the HC fire wall assembly shall be arranged as described in either 5.6.1 or 5.6.2.

5.6.1* The two buildings shall be separated by a double HC fire wall, with each wall extending from the foundation to above the roof of its respective building to form a parapet.

5.6.2* A cantilevered HC fire wall shall be continuous from the foundation to the top of the parapet for the lower roof.

5.6.2.1 The upper wall shall be supported by the framework of the higher building and shall be structurally independent of the cantilevered HC fire wall.

5.6.2.2 The upper wall section shall be permitted to have an exterior fire resistance rating of 1 hour less than the required fire resistance rating of the lower cantilevered portion but not less than a 2-hour rating.

5.7* Clearance.

5.7.1 Clearance to allow for expansion of unprotected structural framework shall be provided between cantilevered HC fire walls and structural framework on both sides and between double HC fire walls.

5.7.2 In buildings assigned to Seismic Design Category C, Seismic Design Category D, Seismic Design Category E, or Seismic Design Category F, as determined in accordance with ASCE/SEI 7, sufficient separation shall be provided between cantilevered HC fire walls and adjacent framing on each side and between double HC fire walls to allow independent movements of the elements without contact.

5.8 Opening Protectives.

5.8.1 Maximum Area. The total width of all openings in HC fire walls shall not exceed 25 percent of the length of the wall in each story.

5.8.2 Single Opening Size. Single opening protectives in HC fire walls shall not exceed the maximum size tested.

5.8.3* Fire Doors. HC fire walls shall have each opening protected with two fire door assemblies.

5.8.4* Double HC Fire Walls. Openings in double HC fire walls shall be protected in accordance with 5.8.4.1 or 5.8.4.2.

5.8.4.1 One fire door shall be provided in each respective wall.

5.8.4.2 Two fire doors within a vestibule, where the vestibule has a fire resistance rating greater than or equal to that required for the double HC fire wall.

5.8.5* Material Handling Systems. Where material handling systems penetrate an HC fire wall, the system design shall provide a method to stop the material handling system and allow fire doors to close without obstruction.

5.9* Penetrations in HC Fire Walls.

5.9.1 Penetrations of HC fire walls shall only be permitted in accordance with Section 5.9.

5.9.2 Unless permitted by 5.9.4, penetrations shall be positioned to pass through the wall no more than 36 in. (915 mm) above the finished floor level.

5.9.2.1 A steel sleeve of a size to allow an approximate 1 in. (25 mm) clearance between the sleeve and the penetrating item shall be provided.

5.9.2.2 The space between the sleeve and penetrating item (annular space) shall be filled as required in Section 4.9.

5.9.2.3 Joint reinforcement shall be provided in the horizontal mortar joints immediately above and below sleeves in concrete masonry walls, and all hollow spaces of concrete masonry walls immediately adjacent to the sleeve shall be filled with concrete, mortar, or grout.

5.9.3 The clear space between the openings for the penetrating items shall be not less than 3 times the largest dimension of the largest opening.

5.9.4* The limitation on the height of penetrations above the floor and other requirements of Section 5.9 shall not apply where the structural framework of the building has a fire resistance rating equal to or greater than the required fire resistance rating of the HC fire wall; only compliance with Section 4.9 shall be required.

5.9.5 Piping conveying high hazard materials shall be in accordance with Section 5.11.

Copyright National Fire Protection Association
Provided by IHS under license with NFPA
No reproduction or networking permitted without license from IHS
Not for Resale

5.10 Ducts and Air Transfer Openings.

5.10.1 Fire dampers shall be installed and maintained in accordance with NFPA 90A.

5.10.2 HC fire walls shall be protected with two fire damper assemblies.

5.10.3 For double HC fire walls, each wall assembly shall be protected with a fire damper rated for that wall with a slip joint connecting the sleeves between the HC fire walls.

5.10.4 For cantilevered and tied HC fire walls a slip joint connecting the sleeves shall be provided on both sides of the two dampers to separate the ductwork on each side from the section containing the dampers.

5.10.5 Ductwork conveying high hazard materials shall be in accordance with 5.11.

5.11* High Hazard Materials.

5.11.1 Piping or ductwork that is used to convey high hazard materials shall not penetrate HC fire walls that have a required fire resistance rating of 4 hours or greater.

5.11.2 Piping or ductwork that is used to convey high hazard materials and that penetrates fire walls with a required fire resistance rating of less than 4 hours shall be protected with approved devices or with systems designed to terminate the flow or movement of the materials through the fire wall automatically upon fire detection.

5.12* Parapets.

5.12.1 HC fire walls shall extend from the foundation to a point at least 30 in. (760 mm) above the top surface of the roof being protected.

5.12.2 Roofs sloped greater than ¼ in. per foot (6 mm per 305 mm) downward toward the HC fire wall shall be provided with a minimum 36 in. (915 mm) parapet.

5.12.3* HC fire walls shall be permitted to terminate at or above the top surface of the roof deck provided the structural framework (columns, beams, and girders) one bay out on both sides of the HC fire wall have the same fire resistance rating as the HC fire wall.

5.13* Roof Surface Protection. Roof surfaces adjacent to the HC fire wall for at least 25 ft (7620 mm) on each side shall be constructed and protected in accordance with 5.13.1 through 5.13.2.2.3.

5.13.1 Locations Outside High Wind–Prone Regions. For buildings less than or equal to 60 ft (18 m) in height and located outside hurricane prone regions, as defined by ASCE/SEI 7, the roof surface adjacent to HC fire walls for at least 25 ft (7620 mm) on each side shall be protected in accordance with 5.13.1.1 or 5.13.1.2.

5.13.1.1 For single-ply membranes, gravel ballast or concrete paver blocks shall provide complete membrane coverage and shall be installed in accordance with ANSI/SPRI RP-4.

5.13.1.2 Built-up and modified bitumen roofs shall be surfaced with gravel or slag applied at a minimum rate of 4 lb/ft^2 (19 kg/m^2) and embedded in a flood coat of hot asphalt or coal-tar.

5.13.2* Locations Within High Wind–Prone Regions. For buildings greater than 60 ft (18 m) in height or located within hurricane prone regions, as defined by ASCE/SEI 7, the roof surface on each side of the roof adjacent to HC fire walls for at least 25 ft (7620 mm) on each side shall be protected in accordance with 5.13.2.1 or 5.13.2.2.

5.13.2.1 For single-ply membranes, concrete paver blocks shall provide complete membrane coverage and shall be installed in accordance with ANSI/SPRI RP-4.

5.13.2.2 Built-up and modified bitumen roofs adjacent to HC fire walls shall be surfaced with gravel or slag embedded in a flood coat of hot asphalt or coal-tar and applied at a minimum rate of 4 lb/ft^2 (19 kg/m^2).

5.13.2.2.1 Gravel or slag shall be embedded into a double flood coat of hot asphalt or coal-tar to ensure full embedment.

5.13.2.2.2 After cooling, any loose gravel or slag shall be removed from the roof.

5.13.2.2.3 All graveled roofs greater than 60 ft (18 m) in height shall have a minimum parapet height of 24 in. (610 mm).

5.14* Roof Structures.

5.14.1 Roof structures with combustible construction or contents, such as monitors, penthouses, or cooling towers, not more than 20 ft (6100 mm) in height above the roof shall be located at least 50 ft (15 m) from HC fire walls required to have a fire resistance rating exceeding 2 hours.

5.14.2 Roof structures with combustible construction or contents over 20 ft (6100 mm) in height shall be provided with a separation distance not less than 2½ times the height of the roof structure from HC fire walls.

5.15 Roof Penetrations. Heat and smoke vents, skylights, and unprotected roof penetrations for air-handling equipment or smoke control systems shall be located at least 25 ft (7620 mm) from HC fire walls requiring a fire resistance rating of more than 2 hours and at least 48 in. (1220 mm) from HC fire walls requiring a fire resistance rating of 2 hours or less.

5.16 Horizontal Continuity.

5.16.1 HC fire walls shall comply with the requirements of 5.16.2 through 5.16.3.

5.16.2 End Walls.

5.16.2.1* The length and arrangement of end walls shall be in accordance with Table 5.16.2.1 and Figure 5.16.2.1(a) or Figure 5.16.2.1(b).

5.16.2.2 The fire resistance rating of the end walls shall be based on fire exposure from the outside and shall be a minimum of 1 hour, or 2 hours less than that of the HC fire wall, whichever is greater.

Table 5.16.2.1 Wall Protection

Height of Exposing Area		Length of End Wall Protection	
ft	m	ft	mm
≤40	≤12.2	6	1830
41–70	12.5–21	10	3050
≥71	≥21.6	14	4265

Note: Protection should consist of blank, fire-rated construction.

Copyright National Fire Protection Association
Provided by IHS under license with NFPA
No reproduction or networking permitted without license from IHS
Not for Resale

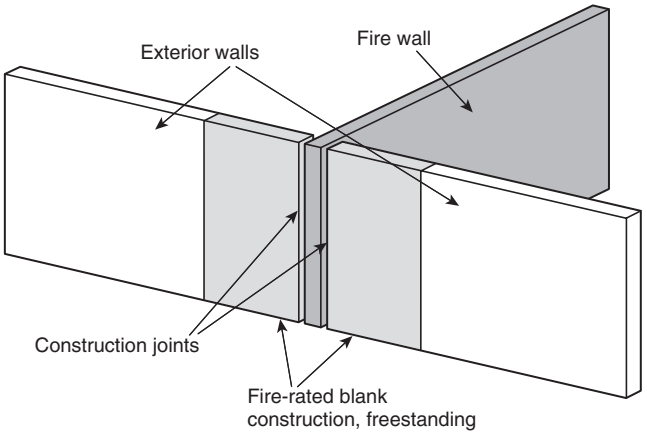

FIGURE 5.16.2.1(a) End Wall Exposure Protection — End Walls Tied to Structural Framing.

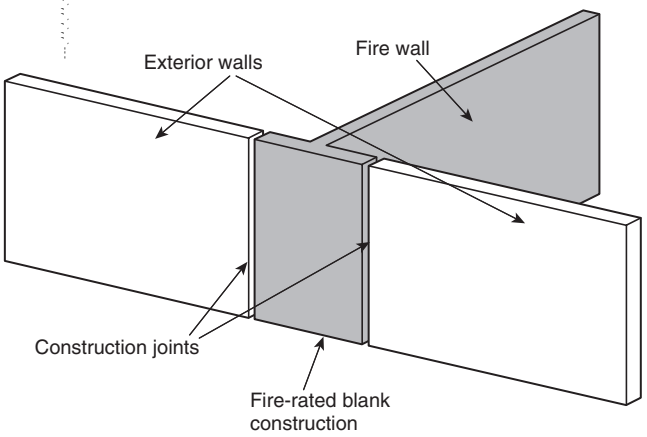

FIGURE 5.16.2.1(b) End Wall Exposure Protection — End Walls Not Tied to Structural Framing.

5.16.2.3 For light hazard and ordinary hazard (Group 1 or 2) occupancies as defined in NFPA 13, in lieu of providing end walls, the fire wall shall be permitted to extend to a distance of at least 30 in. (760 mm) beyond the exterior face of the exterior walls, as shown in Figure 5.16.2.3.

5.16.2.4 Openings for truck docks and railroad sidings shall not be located within 20 ft (6100 mm) on either side of an HC fire wall.

5.16.3 Angle Walls.

5.16.3.1 The length of fire-resistive angle walls, *Y*, as shown in Figure 5.16.3.1, shall be 35 ft (10.7 m).

5.16.3.2 The fire resistance rating of the angle walls shall be based on fire exposure from the outside and shall be 1 hour, or 1 hour less than that of the HC fire wall, whichever is greater.

5.16.3.3 Construction of each wall and eave shall be noncombustible for an additional 65 ft (20 m) beyond the fire resistance–rated construction.

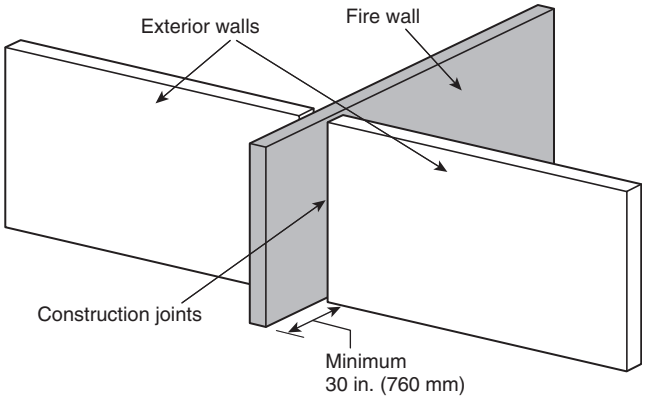

FIGURE 5.16.2.3 End Wall Exposure Protection for Light Hazard and Ordinary Hazard (Group 1 or 2) Occupancies.

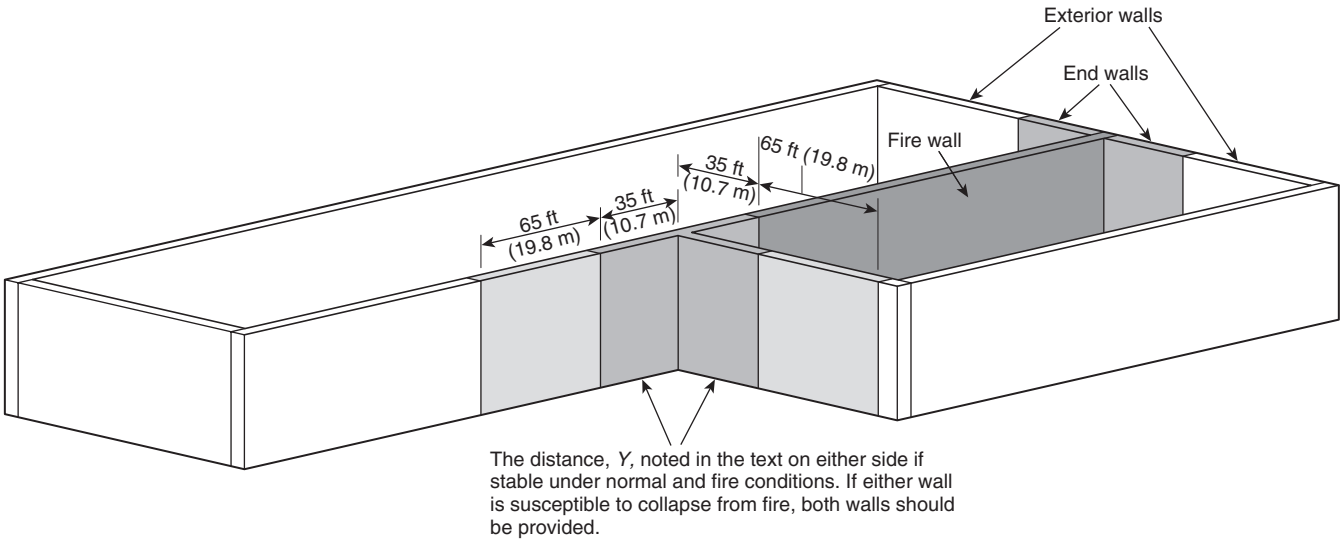

FIGURE 5.16.3.1 Angle Wall Exposure Protection.

Copyright National Fire Protection Association
Provided by IHS under license with NFPA
No reproduction or networking permitted without license from IHS
Not for Resale

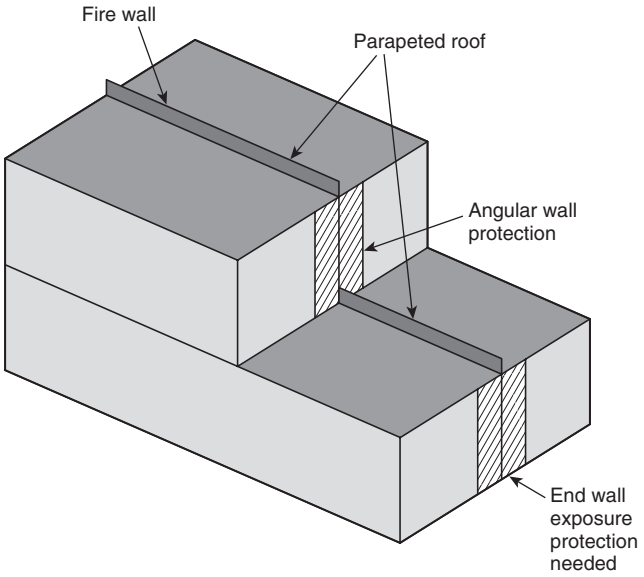

FIGURE 5.16.3.4 Exterior Wall Protection.

5.16.3.4 Elevation differences perpendicular to HC fire walls shall be protected as angle walls, as shown in Figure 5.16.3.4.

Chapter 6 Fire Walls

6.1 Scope. Fire walls shall meet the requirements of this chapter and Chapter 4 except as modified by this chapter.

6.2 Structural Stability.

6.2.1 Fire walls shall be designed and constructed to remain stable after collapse of the structure due to fire on either side of the wall.

6.2.2 Fire walls constructed in compliance with the requirements of Sections 6.3, 6.4, or 6.5 shall be deemed to provide the required stability.

6.3* Cantilevered Fire Walls. Cantilevered fire walls shall be entirely self-supported and nonbearing.

6.3.1 There shall be no connections to the building(s) or contents on either side other than to the flashing.

6.3.2 Such walls shall be erected where there is a complete break in the structural framework.

6.4* Tied Fire Walls.

6.4.1 Placement. Tied fire walls shall be centered on a single column line or constructed between a double column line.

6.4.2 Framework.

6.4.2.1 Structural framing on either side of the wall shall line up horizontally and vertically and shall support the roof.

6.4.2.2 The framework on each side of the fire wall shall be continuous or tied together through the wall.

6.4.2.3 The framework on each side shall be designed so that it resists the maximum lateral pull that can be developed due to framework collapse in a fire on the opposite side.

6.4.2.4 Tied fire walls shall be supported laterally by the building framework with flexible anchors.

6.4.3 Fire Resistance Rating.

6.4.3.1 Where centered on a single column line, structural framing at the column line shall have a fire resistance rating of not less than the required fire resistance rating of the fire wall.

6.4.3.2 Where the wall is installed between double column lines, framing along the first column line immediately on each side of the fire wall shall have a fire resistance rating of not less than the required fire resistance rating of the fire wall.

6.5* Double Fire Walls.

6.5.1 A double fire wall shall consist of two back-to-back walls.

6.5.2 There shall be no connections, other than to the flashing, between the walls.

6.5.3 Each fire wall shall be supported laterally by the building frame on its respective side and shall be independent of the fire wall and framing on the opposite side.

6.6 Fire Wall Termination. Fire walls shall extend from the foundation to a point at least 30 in. (760 mm) above the surface of the roof except where installed in accordance with 6.6.1 through 6.6.5.

6.6.1 Buildings Located Above Parking Garages. A building located above a parking garage shall be permitted to have the fire walls for the building located above the parking garage extend from the horizontal separation between the parking garage and the building, provided all of the following conditions are met:

(1) The horizontal separation between the parking garage and the building above shall have a minimum 3-hour fire resistance rating.
(2) The basement or first story above grade plane shall be of Type I construction.
(3) Shaft, stairway, ramp, or escalator enclosures through the horizontal assembly shall comply with either of the following conditions:
   (a) The enclosure shall have not less than a 2-hour fire resistance rating with opening protectives in accordance with the applicable building code.
   (b) Where the walls below the horizontal assembly have a minimum 3-hour fire resistance rating with opening protectives as required for walls forming a 3-hour fire barrier, the enclosure walls extending above the horizontal assembly shall be permitted to have a 1-hour fire resistance rating, provided that all the following conditions are met:
      i. The building above the horizontal assembly is not required to be of Type I construction.
      ii. The enclosure connects less than four stories above the horizontal assembly.
      iii. The enclosure opening protectives above the horizontal assembly have a minimum 1-hour fire protection rating.
(4) The building above the horizontal assembly shall contain only business, mercantile, storage, or residential occupancies or assembly occupancies having an assembly room with an occupant load of less than 300.

Copyright National Fire Protection Association
Provided by IHS under license with NFPA
No reproduction or networking permitted without license from IHS
Not for Resale

(5) The building below the horizontal assembly shall be an enclosed or open parking structure used for the parking and storage of private motor vehicles unless otherwise permitted by the following:
   (a) Entry lobbies, mechanical rooms, and similar uses incidental to the operation of the building shall be permitted.
   (b) Business, mercantile occupancies, and assembly occupancies having an assembly room with an occupant load of less than 300 shall be permitted in addition to those uses incidental to the operation of the building (including storage areas), provided that the entire structure below the horizontal assembly is protected throughout by an approved, electrically supervised automatic sprinkler system installed in accordance with NFPA 13.
(6) The maximum building height shall not exceed the limits set forth in the applicable building code for the least restrictive type of construction involved.

6.6.2 Two-Hour Fire Resistance–Rated Noncombustible or Limited-Combustible Roof Assemblies. Fire walls shall be permitted to terminate against the underside of noncombustible or limited-combustible roof sheathing, deck, or slab where the roof assembly and the entire length and span of supporting elements for the roof assembly has a fire resistance rating of not less than 2 hours.

6.6.3 Two-Hour Fire Resistance–Rated Fire Walls. Fire walls shall be permitted to terminate at the underside of roof sheathing, deck, or slab, provided that all of the following criteria are met:

(1) The fire wall has a required fire resistance rating of not more than 2 hours.
(2) The roof assembly within 48 in. (1220 mm) of the fire wall has not less than a 1-hour fire resistance rating, and the entire length and span of supporting elements for the rated roof assembly has a fire resistance rating of not less than 1 hour.
(3) Openings in the roof are not located within 48 in. (1220 mm) of the fire wall.
(4) The roof is provided with not less than a Class B roof covering.

6.6.4 Type I or Type II Construction.

6.6.4.1 In buildings of Type I or Type II construction, fire walls shall be permitted to terminate at the underside of noncombustible roof sheathing, deck, or slabs where the roof is provided with not less than a Class B roof covering.

6.6.4.2 Openings in the roof of a building of Type I or Type II construction shall not be located within 48 in. (1220 mm) of the fire wall.

6.6.5 Types III, IV, or V Construction. In buildings of Type III, Type IV, and Type V construction, fire walls shall be permitted to terminate at the underside of roof sheathing or deck in accordance with 6.6.5.1, 6.6.5.2, or 6.6.5.3.

6.6.5.1 Fire walls shall be permitted to terminate at the underside of roof sheathing or deck provided that all of the following criteria are met:

(1) The roof assembly within 48 in. (1220 mm) of each side of the fire wall is of fire retardant–treated wood.
(2) The roof is provided with not less than a Class B roof covering.
(3) Openings in the roof are not located within 48 in. (1220 mm) of the fire wall.

6.6.5.2 Fire walls shall be permitted to terminate at the underside of the roof sheathing, where the roof sheathing or deck is constructed of approved noncombustible or limited-combustible materials or of fire retardant–treated wood for a distance of 48 in. (1220 mm) on both sides of the wall.

6.6.5.3 Fire walls shall be permitted to terminate at the roof sheathing or deck, provided all of the following criteria are met:

(1) The underside of the roof sheathing or deck is protected with 5⁄8 in. (16 mm) Type X gypsum board applied directly beneath the underside of the roof sheathing or deck.
(2) The Type X gypsum board is supported by a minimum of 2 in. (51 mm) ledgers attached to the sides of the roof framing members.
(3) The Type X gypsum board is applied on both sides of the fire wall for a minimum distance of 48 in. (1220 mm) on both sides of the fire wall.
(4) Openings in the roof are not located within 48 in. (1220 mm) of the fire wall.
(5) The roof is covered with a minimum Class C roof covering.

6.7 Fire Walls with Elevation Differences. Where a fire wall separates parts of a building having different heights, the fire wall shall be permitted to terminate in accordance with one of the following:

(1) At a point 36 in. (915 mm) above the lower roof level where the exterior wall for a height of 120 in. (3050 mm) above the lower roof is 1-hour fire resistance–rated construction with openings protected by an assemblies have a fire protection rating of not less than 3⁄4 hour
(2) At the sheathing of the lower roof where the exterior wall is without openings and where the roof is of at least 1-hour fire resistance–rated construction for a width of at least 120 in. (3050 mm), measured from the wall

6.8 Clearance.

6.8.1* Clearance to allow for expansion of unprotected structural framework shall be provided.

6.8.2 This space shall be provided between cantilevered walls and structural framework on each side and between double walls.

6.8.3 In buildings assigned to Seismic Design Category C, Seismic Design Category D, Seismic Design Category E, or Seismic Design Category F, as determined in accordance with ASCE/SEI 7, sufficient separation shall be provided between cantilevered fire walls and adjacent framing on each side and between double walls to allow independent movements of the elements without contact.

6.9 Horizontal Continuity.

6.9.1 Horizontal Termination of Fire Walls.

6.9.1.1 Fire walls shall be continuous in one of the following situations:

(1) From exterior wall to exterior wall and extending at least 18 in. (455 mm) beyond the exterior surface of exterior walls
(2) From an exterior wall extending at least 18 in. (455 mm) beyond the exterior surface of exterior walls to a fire wall with the same fire resistance rating
(3) From fire wall to fire wall, with the same fire resistance ratings

Copyright National Fire Protection Association
Provided by IHS under license with NFPA
No reproduction or networking permitted without license from IHS
Not for Resale

6.9.1.2 Fire walls shall be permitted to terminate at the interior face of exterior sheathing, siding, or other exterior finishes where the exterior sheathing, siding, or other exterior finishes are noncombustible or limited combustible and extend 48 in. (1220 mm) on both sides of the fire wall.

6.9.2 Horizontal Projecting Elements. Fire walls shall extend to the outer edge of horizontal projecting elements such as balconies, roof overhangs, canopies, marquees, and architectural projections that are within 48 in. (1220 mm) of the fire wall, unless otherwise permitted by 6.9.2.1, 6.9.2.2, or 6.9.2.3.

6.9.2.1 Fire walls shall not be required to extend to the outer edge of horizontal projecting elements without concealed spaces where both of the following conditions are met:

(1) The exterior wall behind and below the projecting element has not less than a 1-hour fire resistance rating for a distance not less than the depth of the projecting element on both sides of the fire wall.
(2) Openings within such exterior walls are protected by assemblies having a fire protection rating of not less than ¾ hour.

6.9.2.2 Fire walls shall not be required to extend to the outer edge of noncombustible horizontal projecting elements with concealed spaces where all of the following conditions are met:

(1) A wall having a fire resistance rating of not less than 1-hour extends through the concealed space.
(2) The projecting element is separated from the building by construction having a fire resistance rating of not less than 1 hour for a distance on each side of the fire wall equal to the depth of the projecting element.
(3) Openings within such exterior walls are protected by assemblies having a fire protection rating of not less than ¾ hour.

6.9.2.3 Fire walls shall not be required to extend to the outer edge of combustible horizontal projecting elements with concealed spaces where all of the following conditions are met:

(1) The fire wall extends through the concealed space to the outer edges of the projecting elements.
(2) The exterior wall behind and below the projecting element has a fire resistance rating of not less than 1 hour for a distance not less than the depth of the projecting elements on both sides of the fire wall.
(3) Openings within such exterior walls are protected by assemblies having a fire protection rating of not less than ¾ hour.

6.10 Opening Protectives. Openings permitted in fire walls shall comply with Sections 4.8 and 6.10.

6.10.1 Maximum Openings. The total width of all openings in fire walls shall not exceed 25 percent of the length of the wall in each story.

6.10.2 Single Opening Size.

6.10.2.1 Single opening protectives in fire walls shall not exceed the maximum size tested.

6.10.2.2 Single opening protectives in fire walls shall not be limited in size where the buildings on both sides of the fire wall are protected throughout by automatic sprinkler systems in accordance with NFPA 13 or NFPA 13R.

6.10.3* Double Fire Walls. Openings in double fire walls shall be protected using one fire door in each separate wall.

6.10.4* Material Handling Systems. Where material handling systems penetrate a fire wall, the system design shall provide a method to stop the material handling system and allow fire doors to close without obstruction.

Chapter 7 Fire Barrier Walls

7.1 Scope. Fire barrier walls shall meet the requirements of this chapter and Chapter 4 except as modified by this chapter.

7.2 Continuity.

7.2.1 Fire barrier walls shall be continuous from one of the following or a combination thereof:

(1) An exterior wall to an exterior wall
(2) A floor below to a floor or roof above
(3) One fire barrier wall to another fire barrier wall, fire wall, or HC fire wall having a fire resistance rating of not less than that required for the fire barrier wall

7.2.2 Fire barrier walls shall be continuous through all concealed spaces, such as those found above a ceiling, including interstitial spaces.

7.2.3 A fire barrier wall required for an occupied space below an interstitial space shall not be required to extend through the interstitial space, provided that the construction assembly forming the bottom of the interstitial space has a fire resistance rating not less than that of the fire barrier wall.

7.2.4* The fire barrier wall shall be permitted to terminate at an individually protected structural member in the same plane provided the structural member has a fire resistance rating of not less than that required for the fire barrier wall.

7.2.5 Structural elements supporting fire barrier walls shall have a fire resistance rating of not less than required for the wall except as modified by NFPA 220, 5.1.2.2.

7.3 Opening Protectives.

7.3.1 Openings permitted in fire barrier walls shall comply with the requirements of Sections 4.8 and 7.3.

7.3.2 The total glazing area in fire door assemblies and fire window assemblies shall not exceed 25 percent of the wall common to any room.

Annex A Explanatory Material

Annex A is not a part of the requirements of this NFPA document but is included for informational purposes only. This annex contains explanatory material, numbered to correspond with the applicable text paragraphs.

A.3.2.1 Approved. The National Fire Protection Association does not approve, inspect, or certify any installations, procedures, equipment, or materials; nor does it approve or evaluate testing laboratories. In determining the acceptability of installations, procedures, equipment, or materials, the authority having jurisdiction may base acceptance on compliance with NFPA or other appropriate standards. In the absence of such standards, said authority may require evidence of proper installation, procedure, or use. The authority having jurisdiction may also refer to the listings or labeling practices of an organization that is concerned with product evaluations and is thus in a position to determine compliance with appropriate standards for the current production of listed items.

Copyright National Fire Protection Association
Provided by IHS under license with NFPA
No reproduction or networking permitted without license from IHS
Not for Resale

A.3.2.2 Authority Having Jurisdiction (AHJ). The phrase "authority having jurisdiction," or its acronym AHJ, is used in NFPA documents in a broad manner, since jurisdictions and approval agencies vary, as do their responsibilities. Where public safety is primary, the authority having jurisdiction may be a federal, state, local, or other regional department or individual such as a fire chief; fire marshal; chief of a fire prevention bureau, labor department, or health department; building official; electrical inspector; or others having statutory authority. For insurance purposes, an insurance inspection department, rating bureau, or other insurance company representative may be the authority having jurisdiction. In many circumstances, the property owner or his or her designated agent assumes the role of the authority having jurisdiction; at government installations, the commanding officer or departmental official may be the authority having jurisdiction.

A.3.2.3 Listed. Equipment, materials, or services included in a list published by an organization that is acceptable to the authority having jurisdiction and concerned with evaluation of products or services, that maintains periodic inspection of production of listed equipment or materials or periodic evaluation of services, and whose listing states that either the equipment, material, or service meets appropriate designated standards or has been tested and found suitable for a specified purpose.

A.3.3.2.2 Fire Damper. Fire dampers are classified for use in either static systems that will automatically shut down in the event of a fire, or in dynamic systems that operate in the event of a fire. A dynamic fire damper is tested and rated for closure under airflow. [***5000,*** 2006]

A.3.3.5 Fire Resistance Rating. The fire test exposure should be established in accordance with the test procedures of NFPA 251. ASTM E 119 and ANSI/UL 263 are similar to NFPA 251.

A.3.3.9.1 Membrane Penetration. A membrane penetration identifies those openings that are to accommodate cables, cable trays, cabinets, conduits, electrical fixtures and outlets, pipes, wires, vents, and similar items. [***5000,*** 2006]

A.3.3.9.2 Through-Penetration. The term *through-penetration* identifies those openings that are to accommodate cables, cable trays, cabinets, conduits, electrical fixtures and outlets, pipes, wires, vents, and similar items. Blank openings and openings for ducts, chimneys, vents, and similar items can also be through-penetrations. [***5000,*** 2006]

A.3.3.12.6 Fire Wall. Portions of structures that are subdivided by fire walls are permitted to be considered separate buildings for the purpose of applying this standard. The intent of the definition is that fire walls have sufficient structural stability to maintain the integrity of the wall in the event of the collapse of the building construction on either side of the wall.

A.4.2 Other loads, such as seismic loads or interior pressure differences due to wind, can govern and should be considered in accordance with local code requirements. Parapets should be designed for wind loads, including appropriate pressure coefficients.

A.4.3.2.2 The intent of this provision is to permit the provisions of either ASCE/SFPE 29 or ACI 216.1/TMS 0216.1 to be used for the calculation of fire resistance of concrete or masonry elements or assemblies. [***5000:*** A.8.2.3.2.1]

A.4.4.2 In engineered smoke management systems, the designer should consider the use of high-temperature links on fire dampers where air-handling ducts penetrate fire barriers. [***5000:*** A.8.8.8.2]

A.4.4.5 For smoke control systems, see NFPA 92A. [***5000:*** A.8.8.8.5]

A.4.5 Double walls are very common with unprotected frames. The individual walls separate the building frame that laterally supports them from a fire exposure on the opposite side. However, collapse of the respective building frame and wall on the side of fire origin could occur within ½ hour or less. Table 4.5 estimates that about 1 hour will transpire between fire origin, collapse of the respective building frame and wall, and rekindling of the fire.

Table 4.5 is not intended to apply where the building frames are fire resistance rated and would not collapse in an uncontrolled fire.

A.4.6 Where the potential exists for the collapse of building materials or contents or for damage from the impact of vehicles on a wall, the wall should be constructed of materials that are of adequate strength.

A.4.7 Expansion joints are usually found only in buildings that are at least 200 ft (61 m) in length or width, or both, and that are of steel or concrete construction. They are provided to permit the separate portions of the structural frame to expand and contract with temperature and moisture changes without adversely affecting the building's structural integrity or serviceability. Expansion joints can usually be identified by the following characteristics:

(1) Double row of columns
(2) Width of 1 in. to 3 in. (25 mm to 75 mm)

Seismic joints might be found in buildings other than those that are rectangular in plan (e.g., L- and T-shaped buildings) in areas where the risk of an earthquake is moderate to high. Such joints in multistory buildings can be as much as 12 in. (305 mm) in width. They are provided to allow the separated portions of the building to act independently of each other to undergo differential lateral displacement when an earthquake occurs.

With expansion or seismic joints, consideration should be given to the ability of the protecting system to remain in place and perform its intended function after repeated movements of the joints, and with the width of the joint varying from its maximum to minimum width. In the case of seismic joints, the protection system might be damaged during an earthquake that otherwise is not strong enough to cause major structural damage to the building. Therefore, it is necessary to conduct an inspection of those joints after an earthquake.

Methods of protecting expansion or seismic joints include the use of a steel plate cover that is attached to the floor on the side of the joint and is free to slide on the other side, or an elastomeric sealant tested for fire resistivity and expansion/contraction capability. Two methods of determining the fire resistance rating of expansion and seismic joints include testing in accordance with ANSI/UL 2079 or ASTM E 1966.

Expansion joints and seismic joints should not be confused with control or construction joints.

Control joints are normally found in concrete or masonry wall and concrete slabs on grade. They are provided to (1) prevent cracking of the wall or slab due to excessive tensile forces in the concrete or masonry caused by shrinkage upon drying, or (2) induce cracking caused by drying shrinkage at a predetermined location; hence, the term *control joint.*

--`,,```,-`-`,,`,,`,`,,`---

Copyright National Fire Protection Association
Provided by IHS under license with NFPA
No reproduction or networking permitted without license from IHS
Not for Resale

Construction joints are used as stopping and starting points for two successive concrete placement (pours) in walls, floors, and beams. Since a construction joint must be designed to transfer load across the joints, separation due to thermal- or moisture-induced movements is not anticipated.

Two other types of linear openings occur in fire barriers at (1) the intersection at the top of a wall and the underside of the floor or roof above (that is, head of wall), and at (2) the intersection at the perimeter of a floor of a fire-rated or non-fire-rated exterior wall assembly. Both of these lineal openings might be several inches wide and can be subject to movement induced by thermal expansion, wind loads, and live and dead loads. Appropriate protection is critical to the fire-resistive integrity and continuity of the floor or wall assembly. A fire resistance–rated perimeter joint system designed and tested for these locations should be securely installed in or on the intersection for its entire length, so as not to dislodge, loosen, or otherwise impair its ability to accommodate expected building movements. [***5000:*** A.8.9]

A.4.8.4 Any door that is required to be self-closing or automatic-closing by NFPA *101* cannot be held open with a fusible link or similar device. It is recognized that this standard requires some doors to be self-closing or automatic-closing where fusible link devices might be acceptable, such as for area separations or for separation of building construction types. Some codes allow doors to be self-closing or automatic-closing by any device, including fusible links, acceptable to NFPA 80. However, 4.8.4.2 clarifies that doors typically required by NFPA *101* to be self-closing or automatic-closing can be held open only if released by smoke detection as outlined in 4.8.4.2.1. This requirement would typically apply to doors in exit enclosures, horizontal exits, vertical opening enclosures, smoke barriers, occupancy separations, and most hazardous area enclosures and corridor walls required to be fire rated or to resist the passage of smoke, unless exempted by the appropriate occupancy chapter. [***5000:*** A.8.7.3]

A.4.9.2.2.1(1) Penetrations of fire barriers or smoke barriers required to have a fire resistance rating (wall, floor, and floor-ceiling and roof-ceiling assemblies) should be contained or should be tested for a period of time not less than the fire resistance rating of the assembly penetrated under a minimum positive pressure differential of 0.01 in. of water column (2.5 Pa) in accordance with one of the following:

(1) Tested in accordance with ASTM E 814
(2) Tested in accordance with NFPA 251
(3) Tested in accordance with ANSI/UL 1479
(4) Contained in a fire resistance–rated shaft enclosure

The suitability of a specific type of firestop system for the assembly penetrated should be determined in accordance with the construction conditions, the manufacturer's installation requirements, and its listing.

ASTM E 814 defines hourly ratings for firestop systems, which are explained in the following paragraphs.

The F rating criterion prohibits flame-through and requires an acceptable hose stream performance. An F rating equal to the assembly penetrated should be required in order to limit the spread of fire.

The T rating criterion measures the temperature rise on the unexposed surface of the wall or floor assembly, on the penetrating item, and on the firestop material; it also requires an acceptable hose stream performance. Where penetrating items through floors are located outside a wall cavity, the temperature (or T rating) of the firestop system should not exceed 325°F (181°C) above ambient where the penetrating item will come into contact with combustible materials.

The L rating criterion (as established in ANSI/UL 1479) determines the amount of air leakage in cubic feet per minute per square foot (cubic meters per minute per square meter) of opening through the firestop system at ambient temperature and at 400°F (204°C) at an air pressure differential of 0.30 in. water column (75 Pa). The L rating provides information regarding the suitability of the firestop system for use in a smoke barrier or smoke partition where such assemblies are used to limit the migration of smoke as required by the applicable building code. Although no specific acceptability requirements are established by any standard, such air leakage (smoke) limitations might be established by the designer or other sections of the applicable building code.

Where the applicable building code permits the use of concrete, mortar, or grout as a firestop material for dynamic piping systems that expand and contract, provisions might be needed to protect the piping from corrosion or chafing.

Pipes and tubes carrying hazardous materials might require additional protection.

NFPA 70 contains requirements for installation and percentage of electrical conductor fill for conduit, cable trays, and other electrical conductor raceways, which also affect the requirements for each type of electrical penetration and the suitability of the firestop system. The 1-hour T rating might not be suitable in electrical through-penetrations such as bus bars, bus ducts, or cable trays where the effect of ampacity reduction has not been investigated. [***5000:*** A.8.8.2.2.1(1)]

A.4.9.7.2(1) The term *fireblocking* is defined as a material, barrier, or construction installed in concealed spaces to prevent the extension of fire for an unspecified period of time.

A.5.3 Walls intended to be used as cantilevered HC fire walls or fire walls in the future and used as temporary exterior walls will be vulnerable to wind damage. Such walls should be designed to resist required wind loads. If the future cantilevered wall is temporarily fastened to the building frame until the additional building is built, care should be taken to ensure that all ties to the wall are fully cut when new construction is completed.

A.5.4 Tied HC fire walls or fire walls *[see Figure A.5.4(a)]* are fastened to and usually encase members of the structural frame of the building. To remain stable, the pull of the collapsing structural members on the fire side of the wall must be resisted by the strength of the structure on the other side.

Since a fire can occur on either side of the wall, the wall preferably should be located at the center of strength of the building frame. The center of strength is the plane within the building frame in which the structural framing on either side has equal resistance. In small structures, the center of strength generally is in the middle of the building. *[See Figure A.5.4(b).]* In large buildings, the center of strength might lie midway between two double-column line expansion joints. *[See Figure A.5.4(c) and Figure A.5.4(d).]* Single-column line expansion joints utilizing beams with slotted connections do not break the continuity of the building frame. *[See Figure A.5.4(e).]*

Copyright National Fire Protection Association
Provided by IHS under license with NFPA
No reproduction or networking permitted without license from IHS
Not for Resale

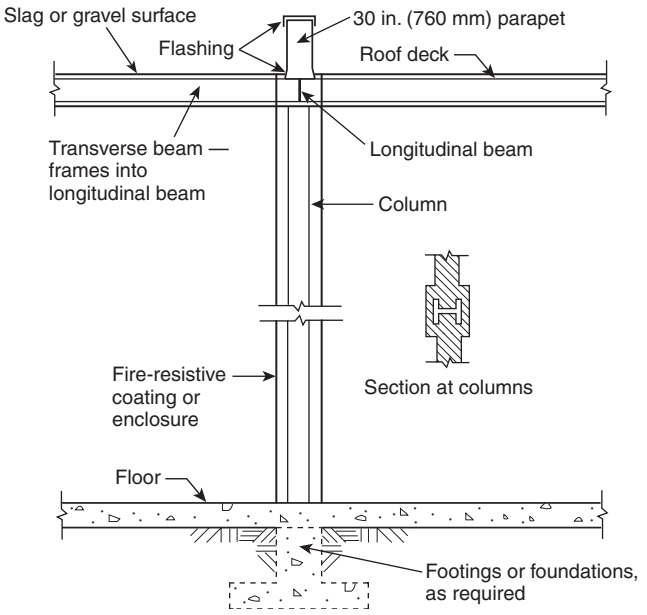

FIGURE A.5.4(a) Typical Tied HC Fire Wall or Fire Wall Used with Continuous Building Framework.

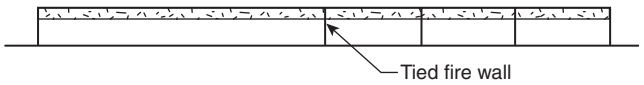

FIGURE A.5.4(b) A Tied Wall at the Center of a Continuous Steel Frame; Pull from Collapsing Steel on Either Side Must be Resisted by the Lateral Strength of Steel on the Other Side.

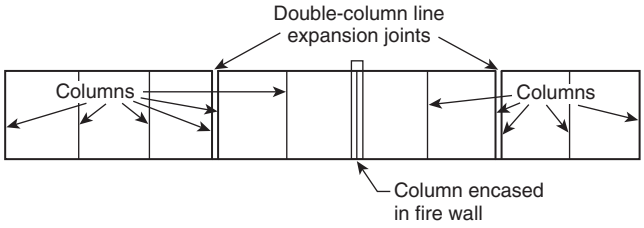

FIGURE A.5.4(c) Tied Wall Where Framing Is Not Continuous Throughout the Building.

Bolts with nuts and washers are permitted to be used to tie framework across a double-column line. In order to prevent the defeat of the purpose of the expansion joint created by the double-column line, nuts should be backed off slightly about ¾ in. (19 mm). Where the primary roof framing is perpendicular to the HC fire wall or fire wall, two bolts should tie the roof framing together over each column to provide concentric load distribution. Where the primary roof framing is parallel to the HC fire wall or fire wall, single bolts are permitted to be used; however, intermediate ties might be needed between column lines. A registered civil or structural engineer should be consulted to provide more exact details. *[See Figure A.5.4(f) and Figure A.5.4(g).]*

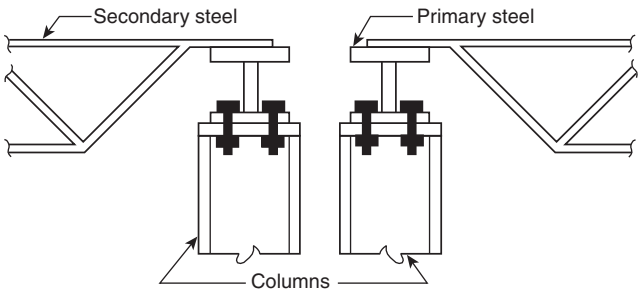

FIGURE A.5.4(d) Double-Column Line Expansion Joint.

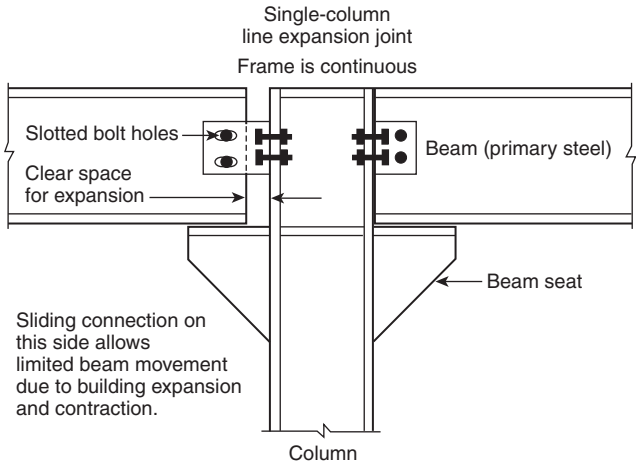

FIGURE A.5.4(e) Single-Column Line Expansion Joint Frame Is Continuous.

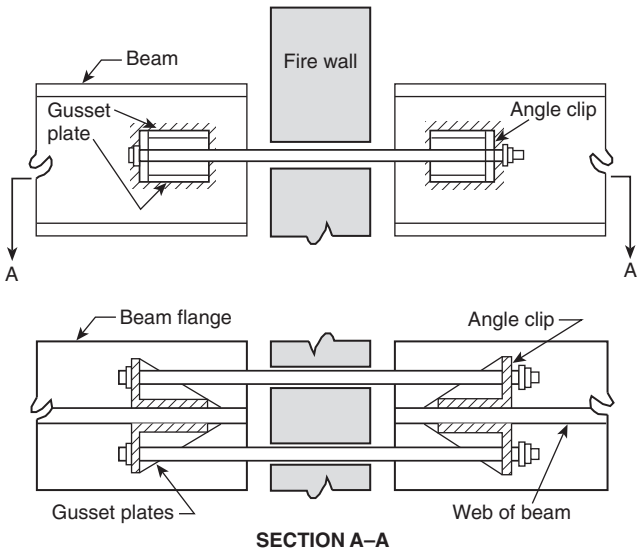

Note: Columns are needed but not illustrated.

FIGURE A.5.4(f) Through-Wall Tie — Primary Roof Framing Perpendicular to Wall.

Copyright National Fire Protection Association
Provided by IHS under license with NFPA
No reproduction or networking permitted without license from IHS
Not for Resale

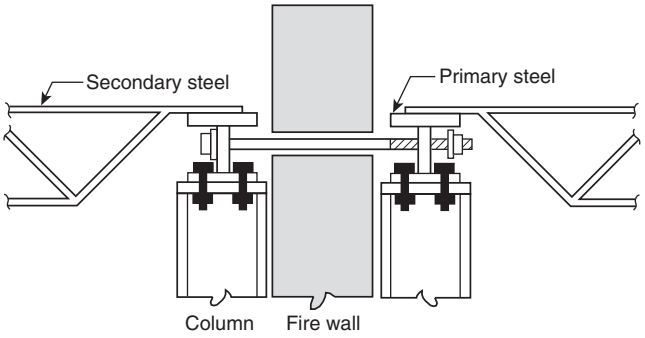

FIGURE A.5.4(g) Through-Wall Tie — Primary Steel Parallel to HC Fire Wall or Fire Wall.

If the wall is not located at the center of strength, the lateral resistance of the frame on either side of the wall should be sufficient to resist the maximum horizontal component of the force that could result from collapsing structural framework on the opposite side. The horizontal force at each tie should be computed by using the following formula:

$$H = \frac{wBL^2}{8S}$$

where:
H = horizontal pull per tie [lb (kg)]
w = dead load plus 25 percent of the live load of the roof [lb/ft^2 (kg/m^2)]
B = distance between ties [ft (m)]
L = span of the structural member running perpendicular to the wall [ft (m)]
S = sag in ft (m) that can be assumed as:
= 0.07L for open-web trusses
= 0.09L for solid beams
= 0.06L for wood trusses
[See Figure A.5.4(h).]

A.5.5 Figure A.5.5(a), Figure A.5.5(b), and Figure A.5.5(c) provide three configurations for construction of a double HC fire wall or fire wall.

Where there is an uncontrolled fire on either side of a double HC fire wall or fire wall, one building frame will collapse, pulling the wall on that side with it. The other wall, supported by structural framework on the protected side, will remain in place to stop the spread of fire.

Since there should be no connections between the walls, particular attention should be paid to the details at openings in the walls.

A double HC fire wall or fire wall is most adaptable where an addition to a plant requires an HC fire wall or fire wall between an existing structure and a new building. The existing wall, which is secured to the building frame, is altered, if necessary, to provide the proper fire resistance. Another HC fire wall or fire wall is then constructed adjacent to the existing one and secured to the new building frame.

A.5.6.1 See Figure A.5.6.2(a).

A.5.6.2 The exterior fire-rated wall above the cantilevered wall should not overlap the cantilevered wall on the side of the lower building. It can be installed above the cantilevered wall or overlap the cantilevered wall on the side of the higher building *[see Figure A.5.6.2(a) and Figure A.5.6.2(b)]*. In either case, the integrity of the fire resistance rating of the HC fire wall should be maintained by protecting the joint between the cantilevered wall and the exterior HC fire wall attached to the higher building. In some cases, the parapet can be omitted from the higher wall only; however, such a judgment should consider the severity of exposure from the occupancy in the lower building and the elevation difference between the exposure and the top of the higher wall.

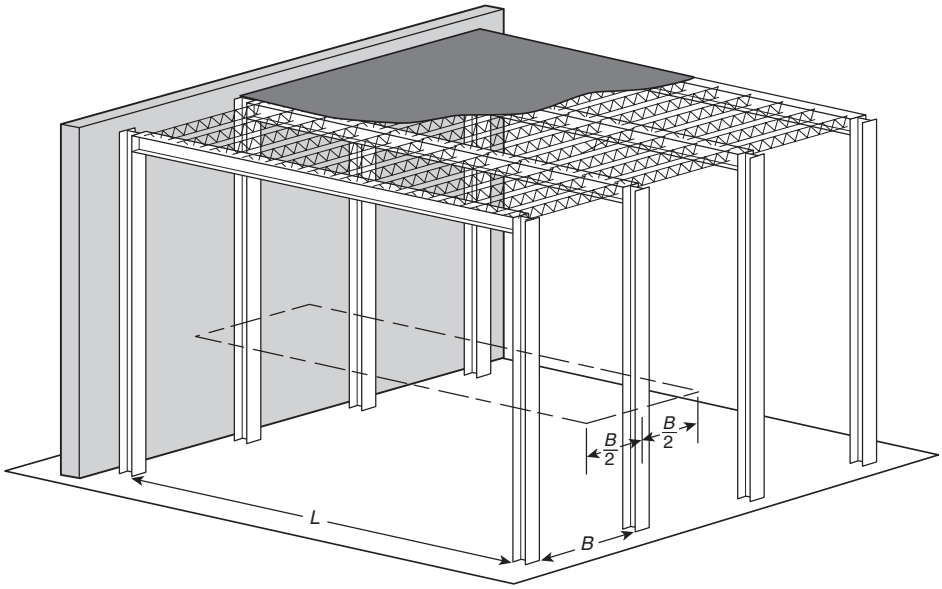

FIGURE A.5.4(h) Tied HC Fire Wall or Fire Wall with Ties at Each Beam.

Copyright National Fire Protection Association
Provided by IHS under license with NFPA
No reproduction or networking permitted without license from IHS
Not for Resale

A.5.7 Table A.5.7 is based on steel framework. This table provides clearances that are conservative for other types of framework materials. It is based on an average temperature of 800°F (427°C) in two adjacent bays.

Adequate clearance should be provided between storage and HC fire walls or fire walls to prevent damage to the wall that might result from swelling of absorbent materials due to contact with water.

A.5.8.3 Figure A.5.8.3(a) and Figure A.5.8.3(b) show two methods of arranging a means of egress through an HC fire wall.

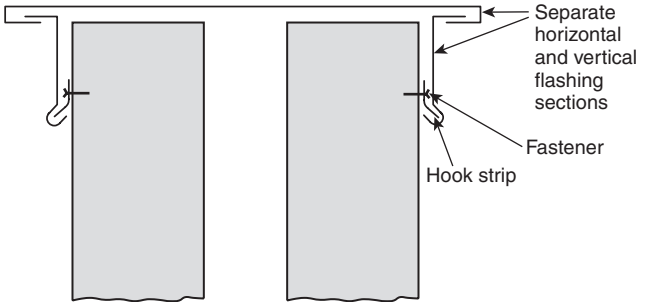

FIGURE A.5.5(b) Double HC Fire Wall or Fire Wall — Separate Horizontal and Vertical Flashing Sections.

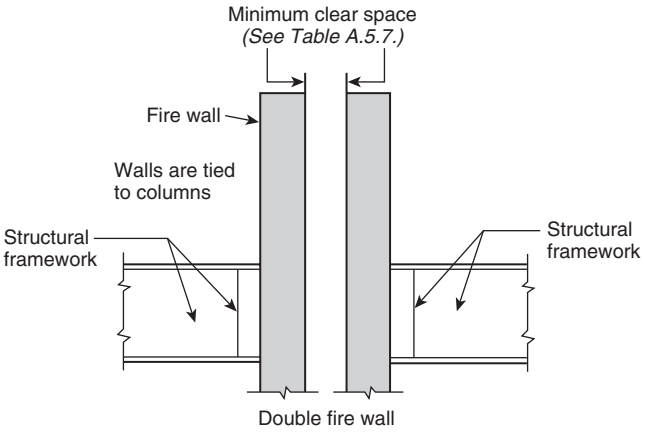

FIGURE A.5.5(a) Double HC Fire Wall or Fire Wall — No Connections.

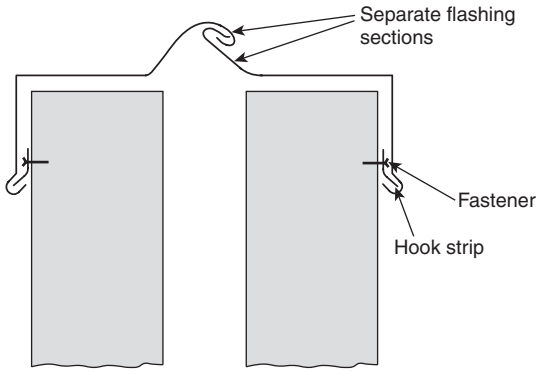

FIGURE A.5.5(c) Double HC Fire Wall or Fire Wall — Separate Flashing Sections.

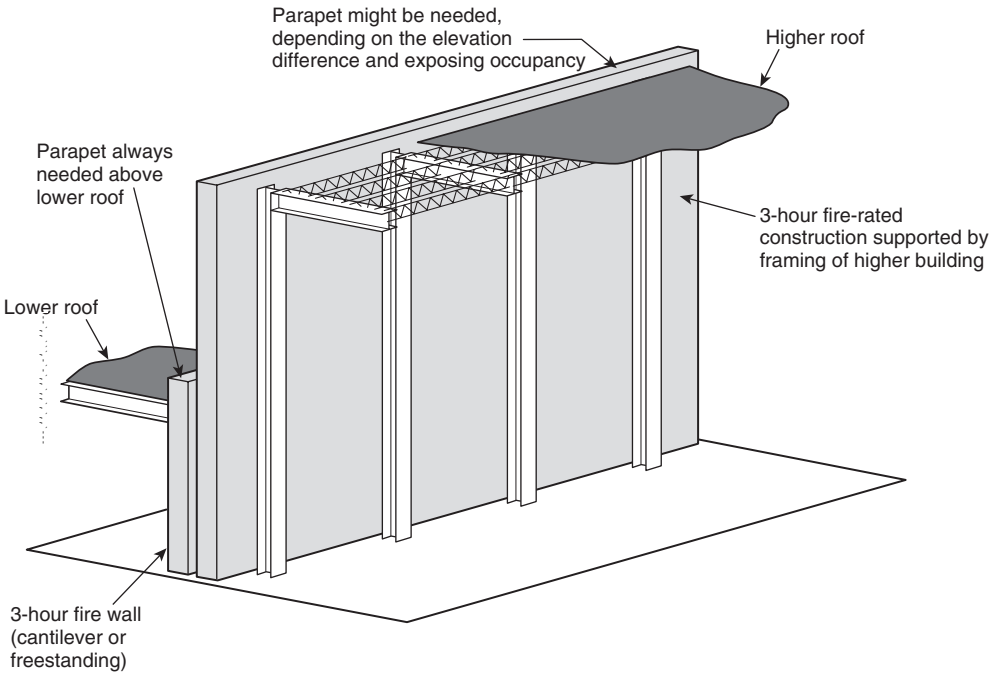

FIGURE A.5.6.2(a) HC Fire Wall or Fire Wall Arrangement at Elevation Difference (Double Wall).

Copyright National Fire Protection Association
Provided by IHS under license with NFPA
No reproduction or networking permitted without license from IHS
Not for Resale

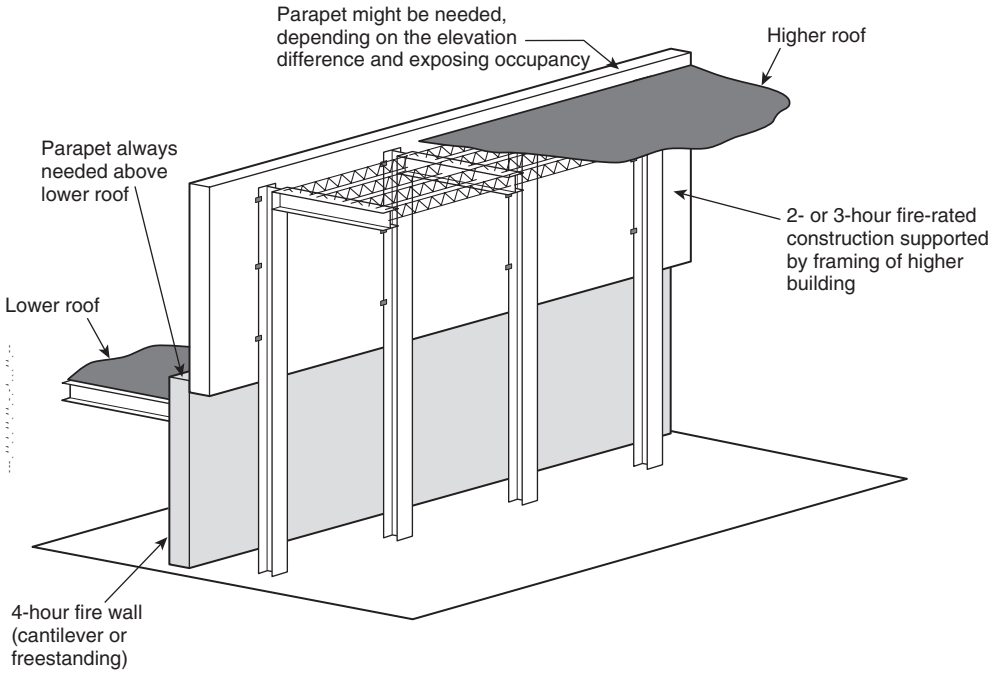

FIGURE A.5.6.2(b) HC Fire Wall or Fire Wall Arrangement at Elevation Difference (Cantilever Wall).

Table A.5.7 Minimum Recommended Clearance for Thermal Expansion Between Unprotected Structural Framework and HC Fire Walls or Fire Walls, or Between Double HC Fire Walls

Length of Bay Perpendicular to the HC Fire Wall or Fire Wall		Minimum Clearance Between Wall and Structural Framework and Between Double Walls	
ft	mm	in.	mm
20	6,100	2½	64
25	7,600	3¼	83
30	9,100	3¾	95
35	10,700	4½	114
40	12,200	5	127
45	13,700	5¾	146
50	15,200	6¼	159
55	16,800	7	178
≥60	18,300	7½	191

Source: FM DS 1-22, *Criteria for Maximum Foreseeable Loss Fire Walls and Space Separations.*

A.5.8.4 An example of an arrangement where the alternative of providing two fire doors on a freestanding, fire-resistive vestibule is used and where the opening is used as part of the means of egress is shown in Figure A.5.8.3(b). Where this alternative is used and where the opening is used for egress, the vestibule should be long enough to allow both doors to swing in the same direction and open completely.

An example of an arrangement where the alternative of providing two fire doors on a freestanding, fire-resistive vestibule is used and where the opening is not used as part of the means of egress is shown in Figure A.5.8.4.

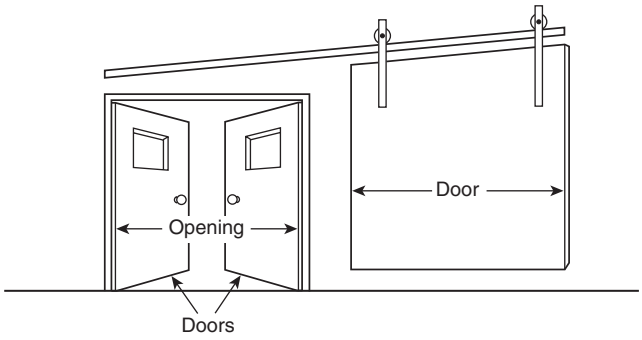

FIGURE A.5.8.3(a) Swinging Door and Sliding Door Configuration for Egress Purposes in an HC Fire Wall.

A.5.8.5 Limited guidance on protection used where material handling systems penetrate HC fire walls or fire walls can be found in NFPA 80. Additional guidance can be found in FM Global Loss Prevention Data Sheet 1-23.

A.5.9 Combustibles should be kept at least 12 in. (305 mm) away from pipes, ducts, plates, and raceways where they penetrate the wall. Alternatively, a penetration seal with a T rating (as defined by ASTM E 814) of not less than 1 hour should be provided.

Mechanical connections, such as double-threaded elbows *(see Figure A.5.9)* or flexible-braided steel pipe, that are acceptable to the authority having jurisdiction and that will limit stress on the wall should be considered.

Copyright National Fire Protection Association
Provided by IHS under license with NFPA
No reproduction or networking permitted without license from IHS
Not for Resale

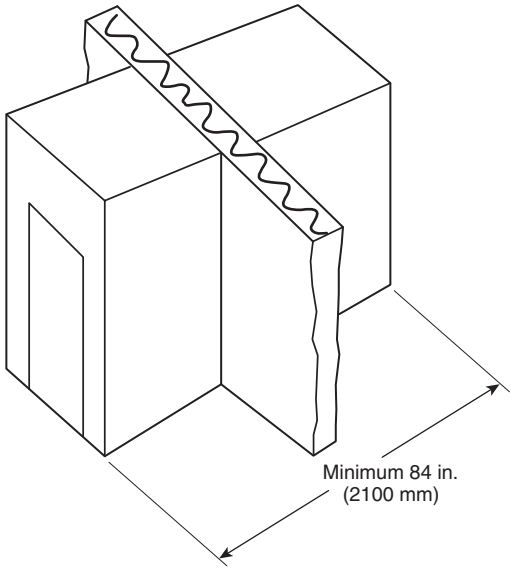

FIGURE A.5.8.3(b) Vestibule Arrangement for Egress Purposes in an HC Fire Wall.

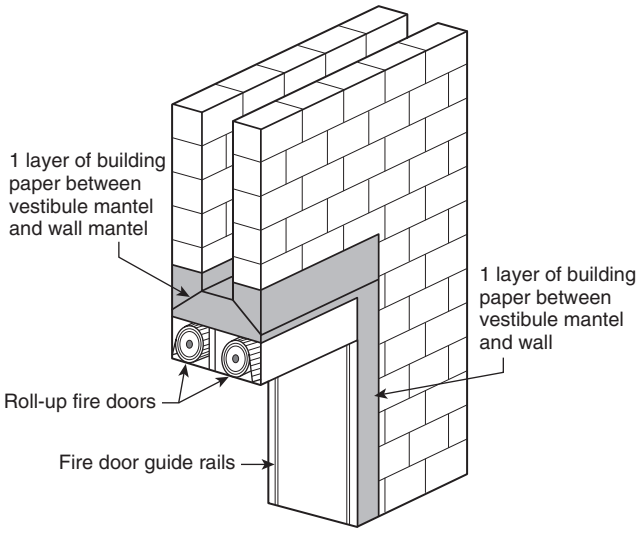

FIGURE A.5.8.4 Double Doors on a Freestanding Vestibule.

Steel-faced HC fire walls with gypsum board core or gypsum board on stud HC fire walls should be provided with a concrete stanchion where pipes, raceways, or cables penetrate HC fire walls.

A.5.9.4 The reason for this alternative is to prevent building collapse near the fire wall that could transfer forces to the HC fire wall via wall penetrations. Where it is not intended to provide fire resistance for structural framework for the entire building that is at least equal to that of the fire wall, providing such protection within the first two bays of the building immediately on each side of the HC fire wall will meet the intent of this alternative.

A.5.11 High hazard materials transported by piping or ductwork passing through HC fire walls have been shown to be a significant avenue of fire propagation across the HC fire wall

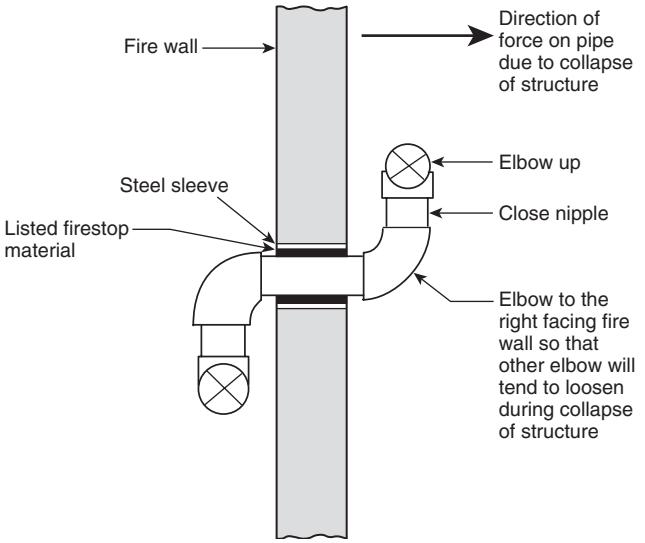

FIGURE A.5.9 Pipe Penetration.

and should be avoided. Where necessary for these systems to penetrate a HC fire wall with a fire resistance rating of less than 4 hours, the flow of the high hazard materials must be interrupted or otherwise protected by engineered devices or systems specifically designed for such purpose and approved by the authority having jurisdiction. Devices that can be used for this protection include but are not limited to excess-flow valves and fire-safe shutoff valves, pneumatic knife or gate dampers, blower/vacuum shutdown devices, or encapsulation of the piping or ductwork and its supports with material having a fire resistance rating at least equal to that required of the HC fire wall.

High hazard materials include flammable gases and combustible and flammable liquids used in piping systems and combustible dusts used in air-conveying systems.

A.5.12 Where a higher building or higher portion of a building adjoins a lower building at an HC fire wall, the lower building should always have a minimum 30 in. (760 mm) high parapet. A parapet can be omitted on the higher building if there is at least a 15 ft to 50 ft (4.6 m to 15.2 m) elevation difference, depending on the severity of the fire exposure from the lower building. *[See also NFPA 80A, Table 4.3.5.2(a) and Table 4.3.5.2(b).]* Where the parapet is not needed, the exterior fire-rated wall construction should extend at least up to the gravel stop. Gravel surfacing or equivalent is still recommended for at least 25 ft (7600 mm) from the HC fire wall in each direction on the higher and lower roof.

A.5.12.3 For example: If the HC fire wall has a 3-hour fire resistance rating, the structural columns, beams and girders have a fire resistance rating of 3 hours. *(See Figure A.5.12.3.)*

A.5.13 For existing construction where the roof strength is not adequate to support gravel surfacing, the roof should be structurally reinforced to support the gravel. As an alternative, or for new or existing construction where the roof slope is excessive for gravel, the roof should be coated with an approved, lightweight, exterior grade, fire-resistant coating.

For single-ply roofs, where the roof is not adequate to support the specified weight of the ballast stone or paver blocks, it should be similarly reinforced, or the top surface of the roof should be protected with an approved coating, as described

Copyright National Fire Protection Association
Provided by IHS under license with NFPA
No reproduction or networking permitted without license from IHS
Not for Resale

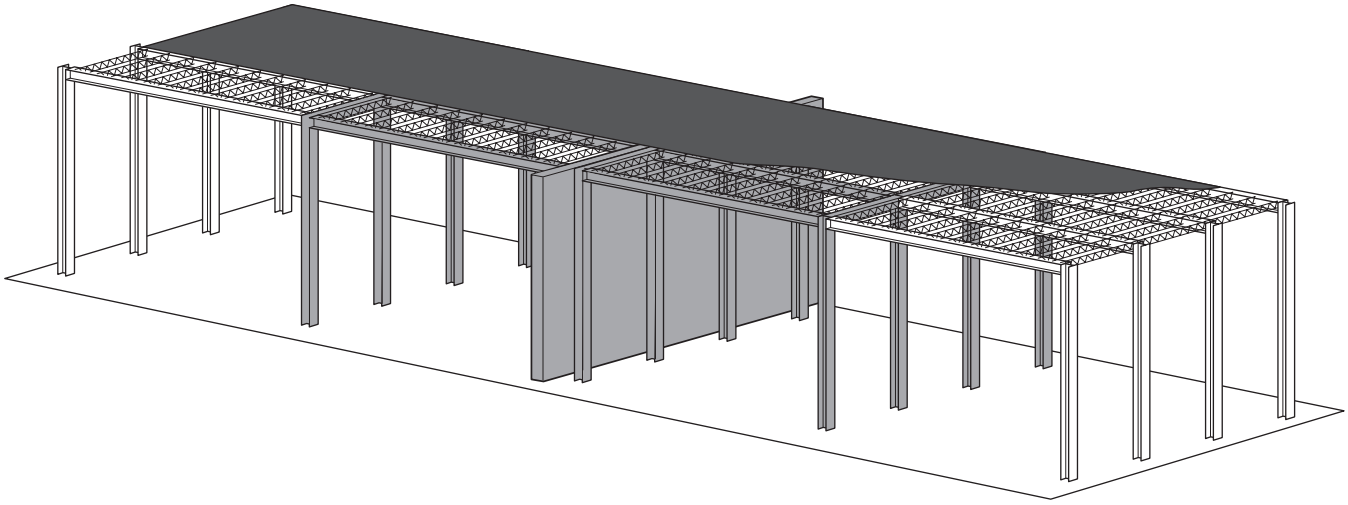

FIGURE A.5.12.3 Three-Hour HC Fire Wall.

previously, if the roof membrane is totally adhered. Mechanically attached, single-ply roof covers normally flex between fasteners, which could cause cracking of a coating.

A.5.13.2 For buildings within hurricane prone areas as defined by ASCE/SEI 7, the presence of roof gravel or slag is not desirable as it can become wind-borne debris in a high wind event. In such cases, and where acceptable to the authority having jurisdiction, gravel or slag should be embedded into a double flood coat of asphalt or coal-tar to ensure full embedment. After cooling, any loose gravel or slag should be removed from the roof.

A.5.14 Where the specified separation is not practical, a minimum of 25 ft (7600 mm) of separation should be provided, and fire-rated barriers should be constructed on the exposed side of the roof projection. The fire resistance rating should be a minimum of 2 hours if a 4-hour HC fire wall is required and 1 hour where HC fire walls of 3 hours or less are required.

A.5.16.2.1 An example of such an end wall configuration is a 4-hour HC fire wall with 2-hour end walls.

A.6.3 For additional guidance on the design of cantilevered fire walls to provide structural stability, see A.5.3. Cantilevered fire walls are also known as freestanding fire walls.

A.6.4 For additional guidance on the design of tied fire walls to provide structural stability, see A.5.4.

A.6.5 For additional guidance on the design of double fire walls to provide structural stability, see A.5.5.

A.6.8.1 See A.5.7.

A.6.10.3 See A.5.8.4.

A.6.10.4 See A.5.8.5.

A.7.2.4 The fire resistance rating of the fire barrier wall is based on specific criteria in NFPA 251. It is based on both structural stability under the fire and hose stream tests and on criteria for temperature transmission through the wall that are designed to prevent ignition of combustible materials on the unexposed side of the wall. The exception recognizes that fire barrier walls can terminate at the underside of an individually protected structural member that has the same fire resistance rating as the wall. In the case where the fire resistance rating for the structural member is the same as that for the wall, no additional temperature transmission criteria are needed to prevent ignition of combustible materials.

However, in the event that the structural member does not have a solid web or solid surface along its length for the full height of the structural member, as with an open-web member, the fire protective covering for the structural member must be continuous for the full height of the structural member, to prevent the passage of flame and hot gases over the top of the fire barrier wall.

Annex B Informational References

B.1 Referenced Publications. The documents or portions thereof listed in this annex are referenced within the informational sections of this standard and are not part of the requirements of this document unless also listed in Chapter 2 for other reasons.

B.1.1 NFPA Publications. National Fire Protection Association, 1 Batterymarch Park, Quincy, MA 02169-7471.

NFPA 70, *National Electrical Code®*, 2005 edition.

NFPA 80, *Standard for Fire Doors and Fire Windows*, 1999 edition.

NFPA 80A, *Recommended Practice for Protection of Buildings from Exterior Fire Exposures*, 2001 edition.

NFPA 92A, *Standard for Smoke-Control Systems Utilizing Barriers and Pressure Differences*, 2006 edition.

NFPA *101®*, *Life Safety Code®*, 2006 edition.

NFPA 251, *Standard Methods of Tests of Fire Resistance of Building Construction and Materials*, 2006 edition.

B.1.2 Other Publications.

B.1.2.1 ACI Publication. American Concrete Institute, P.O. Box 9094, Farmington Hills, MI 48333.

ACI 216.1/TMS 0216.1, *Standard Method for Determining Fire Resistance of Concrete and Masonry Assemblies*, 1997.

Copyright National Fire Protection Association
Provided by IHS under license with NFPA
No reproduction or networking permitted without license from IHS
Not for Resale

B.1.2.2 ASCE/SEI Publications. American Society of Civil Engineers, 1801 Alexander Bell Drive, Reston, VA 20191-4400.

ASCE/SEI 7, *Minimum Design Loads for Buildings and Other Structures,* 2005 with Supplement 1.

ASCE/SFPE 29, *Standard Calculation Methods for Structural Fire Protection,* 2005.

B.1.2.3 ASTM Publications. American Society for Testing and Materials, 100 Barr Harbor Drive, West Conshohocken, PA 19428-2959.

ASTM E 119, *Standard Test Methods for Fire Tests of Building Construction and Materials*, 2000a.

ASTM E 814, *Standard Test Method for Fire Tests of Through-Penetration Fire Stops*, 2002.

ASTM E 1966, *Standard Test Method for Fire Resistive Joint Systems*, 2001.

B.1.2.4 FM Global Publications. FM Global, 1301 Atwood Avenue, P.O. Box 7500, Johnston, RI 02919.

Approval Guide, 2004.

Data Sheet 1-22, *Criteria for Maximum Foreseeable Loss Fire Walls and Space Separations*, 1998.

Data Sheet 1-23, *Protection of Openings*, 1998.

B.1.2.5 UL Publications. Underwriters Laboratories Inc., 333 Pfingsten Road, Northbrook, IL 60062-2096.

ANSI/UL 263, *Standard for Fire Tests of Building Construction and Materials*, 2003.

ANSI/UL 1479, *Standard for Fire Tests of Through-Penetration Firestops*, 2003.

ANSI/UL 2079, *Standard for Tests for Fire Resistance of Building Joint Systems*, 2004.

B.2 Informational References. The following documents or portions thereof are listed here as informational resources only. They are not a part of the requirements of this document.

B.2.1 FM Global Publications. FM Global, 1301 Atwood Avenue, P.O. Box 7500, Johnston, RI 02919.

Data Sheet 1-21, *Fire Resistance of Building Assemblies,* 2003.

Specification Tested Products Guide, 2004.

B.2.2 GA Publication. Gypsum Association, 810 First Street, NE, #510, Washington, DC 20002.

GA 600, *Fire Resistance Design Manual,* 2003.

B.2.3 GE GAP Publications. GE GAP Services, 20 Security Drive, Avon, CT 06001.

GAP.2.2.1, *Fire Walls, Fire Barriers and Fire Partitions,* 2002.

GAP.2.2.2, *Fire Doors and Through-Penetration Protection,* 2002.

B.2.4 ITS Warnock Hersey Publication. ITS Warnock Hersey, 8431 Murphy Drive, Middleton, WI 53562.

ITS Warnock Hersey Certification Listings, 2004.

B.2.5 UL Publications. Underwriters Laboratories Inc., 333 Pfingsten Road, Northbrook, IL 60062-2096.

Fire Resistance Directory, 2004.

B.3 References for Extracts in Informational Sections. *NFPA 5000®*, *Building Construction and Safety Code®*, 2006 edition.

--`,,```,-`-`,,`,,`,`,,`---

Copyright National Fire Protection Association
Provided by IHS under license with NFPA
No reproduction or networking permitted without license from IHS

Not for Resale

Index

© 2005 National Fire Protection Association. All Rights Reserved.

The copyright in this index is separate and distinct from the copyright in the document that it indexes. The licensing provisions set forth for the document are not applicable to this index. This index may not be reproduced in whole or in part by any means without the express written permission of NFPA.

-A-

Air-transfer openings 4.4, 5.10, A.4.4.2, A.4.4.5
Angle walls 5.16.3
  Definition 3.3.12.1
Application to standard 1.3
Approved (definition) 3.2.1, A.3.2.1
Authority having jurisdiction (definition) 3.2.2, A.3.2.2

-B-

Bearing walls (definition) 3.3.12.2
Bearing wall systems (definition) 3.3.12.3

-C-

Cantilevered fire walls 6.3, 6.8.2, 6.8.3, A.6.3
  High challenge fire walls 5.3, 5.6.2, 5.7.2, 5.10.4, A.5.3, A.5.6.2
Combination fire and smoke dampers .....*see* Dampers
Contents
  Low hazard 4.8.4.2.1, 5.16.2.3
    Definition 3.3.1.1
  Ordinary hazard 4.8.4.2.1, 5.16.2.3
    Definition 3.3.1.2

-D-

Dampers
  Combination fire and smoke ..... 4.4.3 to 4.4.5, A.4.4.5
    Definition 3.3.2.1
  Fire ..... 4.4.2 to 4.4.5, 5.10.1 to 5.10.4, A.4.4.2
    Definition 3.3.2.2, A.3.3.2.2
  Smoke (definition) 3.3.2.3
Definitions ..... Chap. 3
Design loads 4.2, A.4.2
Doors; .....*see also* Fire doors and fire door assemblies
  Nonsymmetrical glazing systems 4.8.6
  Wired glass used in 4.8.5
Double fire walls 6.5, 6.8.2, 6.8.3, 6.10.3, A.6.5, A.6.10.3
  Fire resistance rating 4.5, A.4.5
  High challenge fire walls 5.5, 5.6.1, 5.7.2, 5.8.4, 5.10.3, A.5.5, A.5.6.1, A.5.8.4
Ducts 4.4, A.4.4.2, A.4.4.5
  High challenge fire walls 5.10, A.5.9

-E-

Elements
  Load-bearing 5.2.4
    Definition 3.3.3.1
  Structural 4.3.2.2.1, 7.2.4, 7.2.5, A.7.2.4
    Definition 3.3.3.2
Elevation differences of roofs
  Fire walls 6.7
  High challenge fire walls 5.6, A.5.6.1, A.5.6.2
End walls .....*see* Walls
Equivalency to standard 1.5

-F-

Fire barrier walls ..... Chap. 4, Chap. 7
  Continuity 7.2, A.7.2.4
  Definition 3.3.12.5
  Opening protectives 7.3
  Terminations 7.2.4, A.7.2.4
Fireblock ..... 4.9.7.2(1), A.4.9.7.2(1)
Fire dampers .....*see* Dampers
Fire door closers 4.8.4, A.4.8.4
Fire doors and fire door assemblies 4.8.3
  Double fire walls 6.10.3, A.6.10.3
  Fire barrier walls 7.3.2
  High challenge fire walls ..... 5.8.3 to 5.8.5, A.5.8.3 to 5.8.5
  Material handling systems and 6.10.4, A.6.10.4
Fire protection ratings
  Definition 3.3.4
  Fire dampers 4.4.2, A.4.4.2
  Fire door assemblies and window assemblies 4.8.3.1, 4.8.3.2
  Fire walls with elevation differences ..... 6.7(1)
  Horizontal projecting elements ... 6.9.2.1(2), 6.9.2.2(3), 6.9.2.3(3)
  Nonsymmetrical glazing systems 4.8.6
  Opening protectives 4.8.2
Fire resistance ratings 4.3, A.4.3.2.2
  Analytical methods 4.3.2, A.4.3.2.2
  Calculations 4.3.2.2, 4.3.2.3.1, A.4.3.2.2
  Definition 3.3.5, A.3.3.5
  Double wall assemblies 4.5, A.4.5
  Fire barrier walls, continuity of .... 7.2.1(3), 7.2.3 to 7.2.5, A.7.2.4
  Fire walls with elevation differences 6.7
  High challenge fire walls
    Angle walls ..... 5.16.3.1 to 5.16.3.3
    Elevation differences 5.6.2.2
    End walls 5.16.2.2
    Parapets 5.12.3, A.5.12.3
    Penetrations 5.9.4, 5.11.1, 5.11.2, 5.15, A.5.9.4
    Roof structures 5.14.1
    Tied 5.4.3
  Horizontal projecting elements ..... 6.9.1.1, 6.9.2.1(1), 6.9.2.2, 6.9.2.3(2)
  Penetrations ..... A.4.9.2.2(1)
    High challenge fire walls 5.9.4, 5.11.1, 5.11.2, A.5.9.4
    Membrane ..... 4.9.7.2, A.4.9.7.2(1)
  Terminations, fire wall
    Buildings located above parking garages ..... 6.6.1(1), 6.6.1(3)
    Horizontal termination 6.9.1.1
    Two-hour fire resistance-rated fire walls 6.6.3
    Two-hour fire resistance-rated roof assemblies 6.6.2
  Tied fire walls 5.4.3, 6.4.3
Firestops ..... 4.9.2, 4.9.4, 4.9.7.1, A.4.9.2.2(1)
  Definition 3.3.6
Fire walls ..... Chap. 4, Chap. 6; *see also* High challenge fire walls
  Cantilevered .....*see* Cantilevered fire walls
  Clearance 6.8, A.6.8.1
  Definition 3.3.12.6, A.3.3.12.6
  Double .....*see* Double fire walls
  At elevation differences 6.7
  Horizontal continuity 6.9
  Opening protectives .....*see* Opening protectives
  Penetration of .....*see* Penetrations
  Structural stability 6.2
  Tied 6.4, A.6.4
Footings (definition) 3.3.7
Freestanding fire walls .....*see* Cantilevered fire walls

-G-

Glazing
  Fire barrier walls, fire door and fire window assemblies in ... 7.3.2
  Nonsymmetrical systems 4.8.6
  Wired glass, use of 4.8.5

Copyright National Fire Protection Association
Provided by IHS under license with NFPA
No reproduction or networking permitted without license from IHS
Not for Resale

-H-

High challenge fire walls ..... Chap. 4, Chap. 5
- Cantilevered 5.3, 5.6.2, 5.7.2, 5.10.4, A.5.3, A.5.6.2
- Clearance 5.7, A.5.7
- Definition 3.3.12.7
- Double 5.5, 5.6.1, 5.7.2, 5.8.4, 5.10.3, A.5.5, A.5.6.1, A.5.8.4
- At elevation differences 5.6, A.5.6.1, A.5.6.2
- High hazard materials 5.9.5, 5.10.5, 5.11, A.5.11
- Horizontal continuity 5.16, A.5.16.2
- Opening protectives ..... 5.8, A.5.8.3 to A.5.8.5
- Parapets 5.12, A.5.12
- Penetrations 5.9, A.5.9
  - High hazard materials, piping or ductwork for 5.11, A.5.11
  - Material handling systems 5.8.5, A.5.8.5
  - Roof 5.15
- Roof penetrations 5.15
- Roof structures 5.14, A.5.14
- Roof surface protection 5.13, A.5.13
- Structural stability 5.2
- Tied 5.4, 5.10.4, A.5.4

High hazard materials
- Definition 3.3.8
- Piping or ductwork for ..... 5.9.5, 5.10.5, 5.11, A.4.9.2.2(1), A.5.11

Horizontal continuity 5.16, 6.9, A.5.16.2

-I-

Impact damage, protection against 4.6, A.4.6
Insulation coverings, penetrating items 4.9.4

-J-

Joints (wall) 4.7, 5.9.2.3, 5.10.4, A.4.7

-L-

Listed (definition) 3.2.3, A.3.2.3
Load-bearing elements 5.2.4
- Definition 3.3.3.1

Low hazard contents ..... *see* Contents

-M-

Material handling systems, penetrations for 5.8.5, 6.10.4, A.5.8.5, A.6.10.4
Measurement, units of 1.6
Membrane penetrations ..... *see* Penetrations

-N-

Nonbearing walls 5.2.3
- Definition 3.3.12.8

Nonsymmetrical glazing systems 4.8.6

-O-

Opening protectives 4.8, 6.10, A.4.8.4, A.6.10.3, A.6.10.4
- Fire barrier walls 7.3
- High challenge fire walls ..... 5.8, A.5.8.3 to A.5.8.5

Ordinary hazard contents ..... *see* Contents

-P-

Parapets 5.12, A.4.2, A.5.12
Parking garages, buildings located above 6.6.1
Penetrations ..... 4.9, A.4.9.2.1(1), A.4.9.7.2(1)
- Ducts and air-transfer openings 4.4.2, A.4.4.2
- Firestop systems and devices ..... 4.9.2, 4.9.4, 4.9.7.1, A.4.9.2.2(1)
- High challenge fire walls ..... *see* High challenge fire walls
- For high hazard materials ..... *see* High hazard materials
- Insulation coverings 4.9.4
- Material handling systems ..... *see* Material handling systems, penetrations for
- Membrane ..... 4.9.1, 4.9.7, A.4.9.7.2(1)
  - Definition 3.3.9.1, A.3.3.9.1
- Sleeves, use of 4.9.3, 5.9.2.1, 5.9.2.2, 5.10.4
- Through-penetration 4.9.1
  - Definition 3.3.9.2, A.3.3.9.2
- Transitions 4.9.6
- Vibration isolation 4.9.5

Penetration seals A.5.9

Pipes and piping, fire wall penetration of
- Combustible piping connected to noncombustible piping ..... 4.9.6, 4.9.7, A.4.9.7.2(1)
- High challenge fire walls A.5.9

Purpose of standard 1.2

-R-

References ..... Chap. 2, Annex B
Retroactivity of standard 1.4
Roofs ..... *see also* Parapets
- Fire wall terminations
  - Two-hour fire resistance-rated fire walls 6.6.3
  - Two-hour resistance-rated noncombustible or limited-combustible roof assemblies 6.6.2
  - Type I or Type II construction 6.6.4.1
  - Types III, IV, or V construction 6.6.5
- Penetrations 5.15
- Structures 5.14, A.5.14
- Surface protection 5.13, A.5.13

-S-

Scope of standard 1.1
Seismic risk
- Clearance for fire walls 6.8.3
- Joints, seismic A.4.7
- Seismic load, design for A.4.2

Shall (definition) 3.2.4
Should (definition) 3.2.5
SI units 1.6.1
Smoke barriers (definition) 3.3.10
Smoke control systems 4.4.5, A.4.4.5
Standard (definition) 3.2.6
Structural elements ..... *see* Elements
Structural frames 5.2.4
- Definition 3.3.11

-T-

Terminations, fire wall 6.6
- Fire barrier walls 7.2.4, A.7.2.4
- Horizontal termination 6.9.1

Through-penetration ..... *see* Penetration
Tied fire walls 6.4, A.6.4
- High challenge fire walls 5.4, 5.10.4, A.5.4

Type I and Type II construction
- Buildings located above parking garages ..... 6.6.1(2)
- Fire wall terminations 6.6.4

Types III, IV, or V construction, fire wall terminations in 6.6.5

-U-

Units of measurement 1.6

-V-

Vestibules 5.8.4.2, A.5.8.4
Vibration isolation 4.9.5

Copyright National Fire Protection Association
Provided by IHS under license with NFPA
No reproduction or networking permitted without license from IHS
Not for Resale

-W-

Walls ..... *see also* Fire barrier walls; Fire walls; High challenge fire walls
Angle 5.16.3
Definition 3.3.12.1
Bearing (definition) 3.3.12.2
Bearing wall system (definition) 3.3.12.3
End 5.16.2, A.5.16.2
Definition 3.3.12.4
Nonbearing 5.2.3
Definition 3.3.12.8
Windows and window assemblies 4.8.3
Fire barrier walls 7.3.2
Nonsymmetrical glazing systems 4.8.6
Wired glass used in 4.8.5
Wired glass, use of 4.8.5

Copyright National Fire Protection Association
Provided by IHS under license with NFPA
No reproduction or networking permitted without license from IHS
Not for Resale

Sequence of Events Leading to Publication of an NFPA Committee Document

Call goes out for proposals to amend existing document or for recommendations on new document.

▼

Committee meets to act on proposals, to develop its own proposals, and to prepare its report.

▼

Committee votes on proposals by letter ballot. If two-thirds approve, report goes forward. Lacking two-thirds approval, report returns to committee.

▼

Report — *Report on Proposals* (ROP) — is published for public review and comment.

▼

Committee meets to act on each public comment received.

▼

Committee votes on comments by letter ballot. If two-thirds approve, supplementary report goes forward. Lacking two-thirds approval, supplementary report returns to committee.

▼

Supplementary report — *Report on Comments* (ROC) — is published for public review.

▼

NFPA membership meets (Annual or Fall Meeting) and acts on committee report (ROP or ROC).

▼

Committee votes on any amendments to report approved at NFPA Annual or Fall Meeting.

▼

Appeals to Standards Council on Association action must be filed within 20 days of the NFPA Annual or Fall Meeting.

▼

Standards Council decides, based on all evidence, whether or not to issue standard or to take other action, including upholding any appeals.

Committee Membership Classifications

The following classifications apply to Technical Committee members and represent their principal interest in the activity of the committee.

M *Manufacturer:* A representative of a maker or marketer of a product, assembly, or system, or portion thereof, that is affected by the standard.

U *User:* A representative of an entity that is subject to the provisions of the standard or that voluntarily uses the standard.

I/M *Installer/Maintainer:* A representative of an entity that is in the business of installing or maintaining a product, assembly, or system affected by the standard.

L *Labor:* A labor representative or employee concerned with safety in the workplace.

R/T *Applied Research/Testing Laboratory:* A representative of an independent testing laboratory or independent applied research organization that promulgates and/or enforces standards.

E *Enforcing Authority:* A representative of an agency or an organization that promulgates and/or enforces standards.

I *Insurance:* A representative of an insurance company, broker, agent, bureau, or inspection agency.

C *Consumer:* A person who is, or represents, the ultimate purchaser of a product, system, or service affected by the standard, but who is not included in the *User* classification.

SE *Special Expert:* A person not representing any of the previous classifications, but who has a special expertise in the scope of the standard or portion thereof.

NOTES:

1. "Standard" connotes code, standard, recommended practice, or guide.
2. A representative includes an employee.
3. While these classifications will be used by the Standards Council to achieve a balance for Technical Committees, the Standards Council may determine that new classifications of members or unique interests need representation in order to foster the best possible committee deliberations on any project. In this connection, the Standards Council may make such appointments as it seems appropriate in the public interest, such as the classification of "Utilities" in the National Electrical Code Committee.
4. Representatives of subsidiaries of any group are generally considered to have the same classification as the parent organization.

Copyright National Fire Protection Association
Provided by IHS under license with NFPA
No reproduction or networking permitted without license from IHS
Not for Resale

NFPA Technical Committee Document Proposal Form

Note: All proposals must be received by 5:00 p.m. EST/EDST on the published proposal closing date.

For further information on the standards-making process, please contact Codes and Standards Administration at 617-984-7249. For technical assistance, please call NFPA at 617-770-3000.

FOR OFFICE USE ONLY
Log #: _____
Date Rec'd: _____

Please indicate in which format you wish to receive your ROP/ROC: ☐ **CD ROM** ☐ **paper** ☐ **download**
(Note: In choosing the download option you intend to view the ROP/ROC from our Website. No copy will be sent to you.)

Date 12/18/02 **Name** John B. Smith **Telephone** 617-555-1212
Company _____
Address 9 Seattle St. **City** Seattle **State** WA **Zip** 02255
Please indicate organization represented (if any) Fire Marshals Assn. of North America

1. **a) NFPA Document Title** National Fire Alarm Code
   b) NFPA No. & Edition NFPA 72, 2002 ed. **c) Section/Paragraph** 4.4.7.1.1

2. **Proposal Recommends:** *(check one)* ☐ **new text** ☐ **revised text** ☒ **deleted text**

3. **Proposal.** *(Include proposed new or revised wording, or identification of wording to be deleted.)* Note: Proposed text should be in legislative format, that is, use underscore to denote wording to be inserted (inserted wording) and strike-through to denote wording to be deleted (~~deleted wording~~). Delete exception.

4. **Statement of Problem and Substantiation for Proposal.** Note: State the problem that will be resolved by your recommendation. Give the specific reason for your proposal including copies of tests, research papers, fire experience, etc. If more than 200 words, it may be abstracted for publication. A properly installed and maintained system should be free of ground faults. The occurrence of one or more ground faults should be required to cause a "trouble" signal because it indicates a condition that could contribute to future malfunction of the system. Ground fault protection has been widely available on these systems for years and its cost is negligible. Requiring it on all systems will promote better installations, maintenance and reliability.

5. ☒ **This Proposal is Original Material.** Note: Original material is considered to be the submitter's own idea based on or as a result of his/her own experience, thought, or research and, to the best of his/her knowledge, is not copied from another source.

   ☐ **This Proposal is Not Original Material; Its Source** ***(if known)*** **is as Follows:** _____

Sample

I hereby grant the NFPA all and full rights in copyright to this proposal, and I understand that I acquire no rights in any publication of NFPA in which this proposal in this or another similar or analogous form is used.

Signature ***(Required)*** John B. Smith

PLEASE USE SEPARATE FORM FOR EACH PROPOSAL • NFPA FAX (617) 770-3500

Mail to: Secretary, Standards Council • NFPA • 1 Batterymarch Park • PO Box 9101 • Quincy, MA 02269-9101

--`,,```,,-`-`,,`,,`,`,,`---

Copyright National Fire Protection Association
Provided by IHS under license with NFPA
No reproduction or networking permitted without license from IHS
Not for Resale

NFPA Technical Committee Document Proposal Form

Note: All proposals must be received by 5:00 p.m. EST/EDST on the published proposal closing date.

For further information on the standards-making process, please contact Codes and Standards Administration at 617-984-7249. For technical assistance, please call NFPA at 617-770-3000.

FOR OFFICE USE ONLY
Log #: _____
Date Rec'd: _____

Please indicate in which format you wish to receive your ROP/ROC: ☐ **CD ROM** ☐ **paper** ☐ **download**
(Note: In choosing the download option you intend to view the ROP/ROC from our Website. No copy will be sent to you.)

Date _____ **Name** _____ **Telephone** _____
Company _____
Address _____ **City** _____ **State** _____ **Zip** _____
Please indicate organization represented (if any) _____

1. **a) NFPA Document Title** _____
   b) NFPA No. & Edition _____ **c) Section/Paragraph** _____

2. **Proposal Recommends:** *(check one)* ☐ **new text** ☐ **revised text** ☐ **deleted text**

3. **Proposal.** *(Include proposed new or revised wording, or identification of wording to be deleted.)* Note: Proposed text should be in legislative format, that is, use underscore to denote wording to be inserted (inserted wording) and strike-through to denote wording to be deleted (~~deleted wording~~). _____

4. **Statement of Problem and Substantiation for Proposal.** Note: State the problem that will be resolved by your recommendation. Give the specific reason for your proposal including copies of tests, research papers, fire experience, etc. If more than 200 words, it may be abstracted for publication. _____

5. ☐ **This Proposal is Original Material.** Note: Original material is considered to be the submitter's own idea based on or as a result of his/her own experience, thought, or research and, to the best of his/her knowledge, is not copied from another source.

   ☐ **This Proposal is Not Original Material; Its Source *(if known)* is as Follows:** _____

I hereby grant the NFPA all and full rights in copyright to this proposal, and I understand that I acquire no rights in any publication of NFPA in which this proposal in this or another similar or analogous form is used.

Signature *(Required)* _____

PLEASE USE SEPARATE FORM FOR EACH PROPOSAL • NFPA FAX (617) 770-3500

Mail to: Secretary, Standards Council • NFPA • 1 Batterymarch Park • PO Box 9101 • Quincy, MA 02269-9101

Copyright National Fire Protection Association
Provided by IHS under license with NFPA
No reproduction or networking permitted without license from IHS
Not for Resale