NFPA® 22

Standard for Water Tanks for Private Fire Protection

2008 Edition

NFPA, 1 Batterymarch Park, Quincy, MA 02169-7471
An International Codes and Standards Organization

Copyright National Fire Protection Association
Provided by IHS under license with NFPA
No reproduction or networking permitted without license from IHS

Not for Resale

IMPORTANT NOTICES AND DISCLAIMERS CONCERNING NFPA DOCUMENTS

NOTICE AND DISCLAIMER OF LIABILITY CONCERNING THE USE OF NFPA DOCUMENTS

NFPA codes, standards, recommended practices, and guides, of which the document contained herein is one, are developed through a consensus standards development process approved by the American National Standards Institute. This process brings together volunteers representing varied viewpoints and interests to achieve consensus on fire and other safety issues. While the NFPA administers the process and establishes rules to promote fairness in the development of consensus, it does not independently test, evaluate, or verify the accuracy of any information or the soundness of any judgments contained in its codes and standards.

The NFPA disclaims liability for any personal injury, property or other damages of any nature whatsoever, whether special, indirect, consequential or compensatory, directly or indirectly resulting from the publication, use of, or reliance on this document. The NFPA also makes no guaranty or warranty as to the accuracy or completeness of any information published herein.

In issuing and making this document available, the NFPA is not undertaking to render professional or other services for or on behalf of any person or entity. Nor is the NFPA undertaking to perform any duty owed by any person or entity to someone else. Anyone using this document should rely on his or her own independent judgment or, as appropriate, seek the advice of a competent professional in determining the exercise of reasonable care in any given circumstances.

The NFPA has no power, nor does it undertake, to police or enforce compliance with the contents of this document. Nor does the NFPA list, certify, test or inspect products, designs, or installations for compliance with this document. Any certification or other statement of compliance with the requirements of this document shall not be attributable to the NFPA and is solely the responsibility of the certifier or maker of the statement.

Copyright National Fire Protection Association
Provided by IHS under license with NFPA
No reproduction or networking permitted without license from IHS
Not for Resale

ADDITIONAL NOTICES AND DISCLAIMERS

Updating of NFPA Documents

Users of NFPA codes, standards, recommended practices, and guides should be aware that these documents may be superseded at any time by the issuance of new editions or may be amended from time to time through the issuance of Tentative Interim Amendments. An official NFPA document at any point in time consists of the current edition of the document together with any Tentative Interim Amendments and any Errata then in effect. In order to determine whether a given document is the current edition and whether it has been amended through the issuance of Tentative Interim Amendments or corrected through the issuance of Errata, consult appropriate NFPA publications such as the National Fire Codes® Subscription Service, visit the NFPA website at www.nfpa.org, or contact the NFPA at the address listed below.

Interpretations of NFPA Documents

A statement, written or oral, that is not processed in accordance with Section 6 of the Regulations Governing Committee Projects shall not be considered the official position of NFPA or any of its Committees and shall not be considered to be, nor be relied upon as, a Formal Interpretation.

Patents

The NFPA does not take any position with respect to the validity of any patent rights asserted in connection with any items which are mentioned in or are the subject of NFPA codes, standards, recommended practices, and guides, and the NFPA disclaims liability for the infringement of any patent resulting from the use of or reliance on these documents. Users of these documents are expressly advised that determination of the validity of any such patent rights, and the risk of infringement of such rights, is entirely their own responsibility.

NFPA adheres to applicable policies of the American National Standards Institute with respect to patents. For further information contact the NFPA at the address listed below.

Law and Regulations

Users of these documents should consult applicable federal, state, and local laws and regulations. NFPA does not, by the publication of its codes, standards, recommended practices, and guides, intend to urge action that is not in compliance with applicable laws, and these documents may not be construed as doing so.

Copyrights

This document is copyrighted by the NFPA. It is made available for a wide variety of both public and private uses. These include both use, by reference, in laws and regulations, and use in private self-regulation, standardization, and the promotion of safe practices and methods. By making this document available for use and adoption by public authorities and private users, the NFPA does not waive any rights in copyright to this document.

Use of NFPA documents for regulatory purposes should be accomplished through adoption by reference. The term "adoption by reference" means the citing of title, edition, and publishing information only. Any deletions, additions, and changes desired by the adopting authority should be noted separately in the adopting instrument. In order to assist NFPA in following the uses made of its documents, adopting authorities are requested to notify the NFPA (Attention: Secretary, Standards Council) in writing of such use. For technical assistance and questions concerning adoption of NFPA documents, contact NFPA at the address below.

For Further Information

All questions or other communications relating to NFPA codes, standards, recommended practices, and guides and all requests for information on NFPA procedures governing its codes and standards development process, including information on the procedures for requesting Formal Interpretations, for proposing Tentative Interim Amendments, and for proposing revisions to NFPA documents during regular revision cycles, should be sent to NFPA headquarters, addressed to the attention of the Secretary, Standards Council, NFPA, 1 Batterymarch Park, P.O. Box 9101, Quincy, MA 02269-9101.

For more information about NFPA, visit the NFPA website at www.nfpa.org.

Copyright National Fire Protection Association
Provided by IHS under license with NFPA
No reproduction or networking permitted without license from IHS
Not for Resale

Copyright © 2008 National Fire Protection Association®. All Rights Reserved.

NFPA® 22

Standard for

Water Tanks for Private Fire Protection

2008 Edition

This edition of NFPA 22, *Standard for Water Tanks for Private Fire Protection*, was prepared by the Technical Committee on Water Tanks. It was issued by the Standards Council on December 11, 2007, with an effective date of December 31, 2007, and supersedes all previous editions.

This edition of NFPA 22 was approved as an American National Standard on December 31, 2007.

Origin and Development of NFPA 22

In 1909, the NFPA Committee on Gravity Tanks developed the *Standard on Gravity Tanks*. Amendments were considered in 1912 and 1913, and the standard was adopted in 1914. Revised or amended editions were adopted in 1915, 1917, 1918, 1919, 1922, 1926, 1928, 1930, 1931, 1933, 1936, 1941, 1949, and 1950.

The name of the committee was changed to the Committee on Water Tanks, and its recommendations resulted in changes adopted in 1957, 1958, 1962, 1965, 1967, 1970, 1971, 1974, 1976, 1978, 1981, and 1987.

Tanks other than gravity tanks (which, at that time, included concrete reservoirs) and valve pits were first covered in 1913, pressure tanks (formerly covered by *Standards for Sprinkler Systems*) were covered in 1915, and tank heating was covered in 1922. The standard title has been periodically amended to reflect the expanded scope of the standard.

The 1993 edition provided new, environmentally friendly requirements for tank-coating systems. Two new chapters were included to cover the design and erection of bolted steel tanks and concrete tanks. Information on fiberglass tanks also was included. These changes, along with other editorial changes, reflected the current information for water storage tank design.

The 1996 edition of NFPA 22 consolidated tank care and maintenance information within a single chapter. Further revisions addressed the corrosion resistance of certain tank components, access into tanks, the monitoring of internal conditions, and the structural stresses to which tanks are subjected. The figures in Appendix B were revised to reflect current practices. Editorial changes were also made.

The 1998 edition further addressed environmental issues. All inspection, testing, and maintenance requirements were removed and added to the appropriate chapter of the 1998 edition of NFPA 25, *Standard for the Inspection, Testing, and Maintenance of Water-Based Fire Protection Systems*.

The 2003 edition was changed to conform to the *Manual of Style for NFPA Technical Committee Documents*, 2000 edition. Referenced publications were updated.

The 2008 edition recognizes the use of fiberglass-reinforced plastic (FRP) tanks with a new Chapter 11. Acceptance test requirements have been consolidated into a new Chapter 17, "Acceptance Test Requirements," to improve user-friendliness.

NFPA and National Fire Protection Association are registered trademarks of the National Fire Protection Association, Quincy, Massachusetts, 02169.

Copyright National Fire Protection Association
Provided by IHS under license with NFPA
No reproduction or networking permitted without license from IHS
Not for Resale

Technical Committee on Water Tanks

Bruce A. Edwards, *Chair*
Liberty Mutual Property, MA [I]
Rep. Property Casualty Insurers Association of America

Robert M. Gagnon, *Secretary*
Gagnon Engineering, MD [SE]

Phillip A. Brown, American Fire Sprinkler Association, Inc., TX [IM]
John R. Conrady, Conrady Consultant Services, Inc., AL [U]
Sullivan D. Curran, Fiberglass Tank & Pipe Institute, TX [M]
Joseph Duquet, Sprinkler Fitters Local 704, MI [L]
Nick Esposito, Tyco/SimplexGrinnell, TX [IM]
Rep. National Fire Sprinkler Association
Douglas W. Fisher, Hartrampf, Inc., GA [SE]
Jack Hillman, Hall-Woolford Tank Company, Inc., PA [M]
David Hochhauser, Isseks Brothers Incorporated, NY [IM]
John D. Jensen, Fire Protection Consultant, UT [SE]
Nicholas A. Legatos, Preload Incorporated, NY [M]
Rep. American Concrete Institute
Keith McGuire, Columbian TecTank, KS [M]
John M. Mitchard, Nuclear Service Organization (NSO), DE [I]
Tyler Mosman, CCG Facilities Integration, Inc., MD [SE]
Bill Mow, Amfuel, AL [M]
Andrew Rosenwach, Rosenwach Tank Company, Inc., NY [M]
Rep. National Wood Tank Institute
Frank J. Spitz, Jr., Spitz Fire Protection Design Company, MD [SE]
Gregory R. Stein, Tank Industry Consultants, IN [SE]

Alternates

George L. Church, Jr., Rowe Sprinkler Systems, Inc., PA [IM]
(Alt. to P. A. Brown)
Christian M. Dahms, Nuclear Service Organization (NSO), DE [I]
(Alt. to J. M. Mitchard)
Kenneth E. Isman, National Fire Sprinkler Association, Inc., NY [IM]
(Alt. to N. Esposito)
Todd M. Kidd, Liberty Mutual Property, NC [I]
(Alt. to B. A. Edwards)
Patrick A. McLaughlin, McLaughlin & Associates, RI [M]
(Alt. to S. D. Curran)
John J. Sweeney, Smith Engineered Storage Products Company, IL [M]
(Alt. to K. McGuire)

David R. Hague, NFPA Staff Liaison

This list represents the membership at the time the Committee was balloted on the final text of this edition. Since that time, changes in the membership may have occurred. A key to classifications is found at the back of the document.

NOTE: Membership on a committee shall not in and of itself constitute an endorsement of the Association or any document developed by the committee on which the member serves.

Committee Scope: This Committee shall have primary responsibility for documents on the design, construction, installation, and maintenance of tanks and accessory equipment supplying water for fire extinguishment, including gravity and pressure tanks, towers and foundations, pipe connections and fittings, valve enclosures and frost protection, and tank heating equipment.

Copyright National Fire Protection Association
Provided by IHS under license with NFPA
No reproduction or networking permitted without license from IHS
Not for Resale

Contents

Chapter 1 Introduction 22– 5
1.1 Scope 22– 5
1.2 Purpose 22– 5
1.3 Retroactivity 22– 5
1.4 Equivalency 22– 5
1.5 Types of Tanks 22– 5
1.6 Units 22– 5

Chapter 2 Referenced Publications 22– 5
2.1 General 22– 5
2.2 NFPA Publications 22– 6
2.3 Other Publications 22– 6
2.4 References for Extracts in Mandatory Sections (Reserved) 22– 7

Chapter 3 Definitions 22– 7
3.1 General 22– 7
3.2 NFPA Official Definitions 22– 7
3.3 General Definition 22– 7

Chapter 4 General Information 22– 7
4.1 Capacity and Elevation 22– 7
4.2 Location of Tanks 22– 8
4.3 Tank Materials 22– 8
4.4 Workmanship 22– 8
4.5 Plans 22– 8
4.6 Tank Contractor Responsibility 22– 8
4.7 Attachments to Tank Structures 22– 8
4.8 Lightning Protection 22– 8
4.9 Strength 22– 8
4.10 National Standards 22– 9
4.11 Loads 22– 9
4.12 Welding 22– 9
4.13 Roofs 22– 9
4.14 Roof Vent 22– 9
4.15 Test Reports 22–10

Chapter 5 Welded-Steel Gravity Tanks and Suction Tanks 22–10
5.1 General 22–10
5.2 Materials 22–10
5.3 Earthquake Load 22–11
5.4 Unit Stresses 22–11
5.5 Design Details 22–11
5.6 Workmanship 22–13
5.7 Accessories 22–14

Chapter 6 Factory-Coated, Bolted Steel Tanks 22–15
6.1 General 22–15
6.2 Plate and Sheet Materials 22–15
6.3 Earthquake Load 22–16
6.4 Design Details 22–16
6.5 Fabrication 22–16
6.6 Erection 22–16

Chapter 7 Pressure Tanks 22–17
7.1 General 22–17
7.2 Pipe Connections and Fittings 22–18

Chapter 8 Wood Gravity Tanks and Suction Tanks 22–19
8.1 General 22–19
8.2 Material 22–19
8.3 Loads 22–20
8.4 Unit Stresses 22–20
8.5 Details of Design 22–20
8.6 Workmanship 22–21
8.7 Accessories 22–22

Chapter 9 Embankment-Supported Coated Fabric Suction Tanks 22–24
9.1 General 22–24
9.2 Standard Capacities 22–24
9.3 Materials 22–24
9.4 Embankment Preparation and Tank Installation Procedure 22–24
9.5 Tank Sump and Support for Bottom Fittings 22–26
9.6 Pipe Connections and Fittings 22–26

Chapter 10 Concrete Gravity Tanks and Suction Tanks 22–26
10.1 General 22–26
10.2 Prestressed Tanks 22–26
10.3 Standard Capacities 22–26
10.4 Earthquake Load 22–26
10.5 Wall Treatments 22–26

Chapter 11 Fiberglass-Reinforced Plastic Tanks 22–26
11.1 General 22–26
11.2 Application 22–26
11.3 Tank Specification 22–26
11.4 Monolithic Tanks 22–26
11.5 Protection of Buried Tanks 22–26
11.6 Protection of Aboveground Tanks 22–27
11.7 Tank Connections 22–27

Chapter 12 Tank and Tower Foundations in the Ground 22–27
12.1 Concrete Specifications 22–27
12.2 Suction Tank Foundations 22–27
12.3 Foundation Piers for Elevated Tanks 22–28
12.4 Anchorage 22–28
12.5 Grouting 22–28
12.6 Soil-Bearing Pressures 22–28

Chapter 13 Steel Tank Towers 22–28
13.1 General 22–28
13.2 Materials 22–29

Copyright National Fire Protection Association
Provided by IHS under license with NFPA
No reproduction or networking permitted without license from IHS
Not for Resale

13.3 Loads 22–29
13.4 Unit Stresses 22–30
13.5 Details of Design 22–30
13.6 Workmanship 22–34
13.7 Accessories 22–35

Chapter 14 Pipe Connections and Fittings 22–36
14.1 General Information 22–36
14.2 Discharge Pipe 22–37
14.3 Expansion Joint 22–39
14.4 Filling 22–39
14.5 Overflow 22–40
14.6 Clean-Out and Drain 22–40
14.7 Connections for Other Than Fire Protection 22–40
14.8 Sensors 22–41

Chapter 15 Valve Enclosures and Frost Protection 22–41
15.1 Valve Pit or House and Heater House 22–41
15.2 Frostproof Casing 22–42

Chapter 16 Tank Heating 22–43
16.1 General 22–43
16.2 Heating Requirements 22–49
16.3 Heating Systems 22–50
16.4 Tank Insulation 22–54
16.5 Heating for Embankment-Supported Coated Fabric Suction Tanks 22–55

Chapter 17 Acceptance Test Requirements 22–56
17.1 Inspection of Completed Equipment 22–56
17.2 Testing 22–56
17.3 Welded Steel Tanks 22–56
17.4 Bolted Steel Tanks 22–56
17.5 Pressure Tanks 22–56
17.6 Embankment-Supported Coated Fabric Tanks 22–56
17.7 Concrete Tanks 22–56
17.8 Wood Tanks 22–56
17.9 Fiberglass-Reinforced Plastic Tanks—Hydrostatic Test 22–57
17.10 Disposal of Test Water 22–57

Chapter 18 Inspection, Testing, and Maintenance of Water Tanks 22–57
18.1 General 22–57

Annex A Explanatory Material 22–57

Annex B Typical Installations 22–66

Annex C Informational References 22–80

Index 22–81

Copyright National Fire Protection Association
Provided by IHS under license with NFPA
No reproduction or networking permitted without license from IHS
Not for Resale

NFPA 22

Standard for

Water Tanks for Private Fire Protection

2008 Edition

IMPORTANT NOTE: This NFPA document is made available for use subject to important notices and legal disclaimers. These notices and disclaimers appear in all publications containing this document and may be found under the heading "Important Notices and Disclaimers Concerning NFPA Documents." They can also be obtained on request from NFPA or viewed at www.nfpa.org/disclaimers.

NOTICE: An asterisk (*) following the number or letter designating a paragraph indicates that explanatory material on the paragraph can be found in Annex A.

Changes other than editorial are indicated by a vertical rule beside the paragraph, table, or figure in which the change occurred. These rules are included as an aid to the user in identifying changes from the previous edition. Where one or more complete paragraphs have been deleted, the deletion is indicated by a bullet (•) between the paragraphs that remain.

Information on referenced publications can be found in Chapter 2 and Annex C.

Chapter 1 Introduction

1.1 Scope. This standard provides the minimum requirements for the design, construction, installation, and maintenance of tanks and accessory equipment that supply water for private fire protection, including the following:

(1) Gravity tanks, suction tanks, pressure tanks, and embankment-supported coated fabric suction tanks
(2) Towers
(3) Foundations
(4) Pipe connections and fittings
(5) Valve enclosures
(6) Tank filling
(7) Protection against freezing

1.2 Purpose. The purpose of this standard is to provide a basis for the design, construction, operation, and maintenance of water tanks for private fire protection. Nothing in this standard shall prevent the use of systems, methods, or devices that are equivalent in quality, strength, fire resistance, effectiveness, and durability to those prescribed by this standard, provided technical documentation is made available to the authority having jurisdiction that demonstrates equivalency and the system, method, or device is appropriate for the intended purpose.

1.3 Retroactivity. The provisions of this standard reflect a consensus of what is necessary to provide an acceptable degree of protection from the hazards addressed in this standard at the time the standard was issued.

1.3.1 Unless otherwise specified, the provisions of this standard shall not apply to facilities, equipment, structures, or installations that existed or were approved for construction or installation prior to the effective date of the standard. Where specified, the provisions of this standard shall be retroactive.

1.3.2 In those cases where the authority having jurisdiction determines that the existing situation presents an unacceptable degree of risk, the authority having jurisdiction shall be permitted to apply retroactively any portions of this standard deemed appropriate.

1.3.3 The retroactive requirements of this standard shall be permitted to be modified if their application clearly would be impractical in the judgment of the authority having jurisdiction, and only where it is clearly evident that a reasonable degree of safety is provided.

1.4 Equivalency. Nothing in this standard is intended to prevent the use of systems, methods, or devices of equivalent or superior quality, strength, fire resistance, effectiveness, durability, and safety over those prescribed by this standard.

1.4.1 Technical documentation shall be submitted to the authority having jurisdiction to demonstrate equivalency.

1.4.2 The system, method, or device shall be approved for the intended purpose by the authority having jurisdiction.

1.5 Types of Tanks. This standard addresses elevated tanks on towers or building structures, water storage tanks that are at grade or below grade, and pressure tanks.

1.6 Units.

1.6.1 Metric units of measurement in this standard are in accordance with the modernized metric system known as the International System of Units (SI). The bar unit, which is outside of but recognized by SI, is commonly used in international fire protection. Metric units and their conversion factors are shown in Table 1.6.1.

Table 1.6.1 Metric Unit Conversion Factors

Name of Unit	Unit Symbol	Conversion Factor
bar	bar	1 psi = 0.0689 bar
bar	bar	1 bar = 10^5 Pa

Note: For additional conversions and information, see ANSI SI 10.

1.6.2 If a value for measurement in this standard is followed by an equivalent value that is expressed in other units, the first stated value shall be regarded as the requirement. A given equivalent value could be approximate.

1.6.3 SI units in this standard have been converted by multiplying the number of units by the conversion factor and then rounding the result to the appropriate number of significant digits.

1.6.4 Where sizes for pipe, sheet and plate steel, and wire gages are indicated, they are noted in trade sizes and not by hard conversions.

Chapter 2 Referenced Publications

2.1 General. The documents or portions thereof listed in this chapter are referenced within this standard and shall be considered part of the requirements of this document.

Copyright National Fire Protection Association
Provided by IHS under license with NFPA
No reproduction or networking permitted without license from IHS
Not for Resale

2.2 NFPA Publications. National Fire Protection Association, 1 Batterymarch Park, Quincy, MA 02169-7471.

NFPA 13, *Standard for the Installation of Sprinkler Systems,* 2007 edition.

NFPA 14, *Standard for the Installation of Standpipe and Hose Systems,* 2007 edition.

NFPA 15, *Standard for Water Spray Fixed Systems for Fire Protection,* 2007 edition.

NFPA 20, *Standard for the Installation of Stationary Pumps for Fire Protection,* 2007 edition.

NFPA 24, *Standard for the Installation of Private Fire Service Mains and Their Appurtenances,* 2007 edition.

NFPA 25, *Standard for the Inspection, Testing, and Maintenance of Water-Based Fire Protection Systems,* 2008 edition.

NFPA 70®, National Electrical Code®, 2008 edition.

NFPA 72®, National Fire Alarm Code®, 2007 edition.

NFPA 241, *Standard for Safeguarding Construction, Alteration, and Demolition Operations,* 2004 edition.

NFPA 780, *Standard for the Installation of Lightning Protection Systems,* 2008 edition.

2.3 Other Publications.

2.3.1 ACI Publications. American Concrete Institute, P.O. Box 9094, Farmington Hills, MI 48333-9094.

ACI 318, *Building Code Requirements for Structural Concrete and Commentary*, 2002.

ACI 350R, *Environmental Engineering Concrete Structures*, 2001.

2.3.2 ANSI Publications. American National Standards Institute, Inc., 25 West 43rd Street, 4th Floor, New York, NY 10036.

ANSI SI 10, *Standard for Use of the International System of Units (SI): The Modern Metric System*, 1997.

2.3.3 API Publications. American Petroleum Institute, 1220 L Street N.W., Washington, DC 20005-4070.

API 5LC, *Specification for CRA Line Pipe*, 3rd ed., 1998.

2.3.4 ASHRAE Publications. American Society of Heating, Refrigerating and Air Conditioning Engineers, Inc., 1791 Tullie Circle, N.E., Atlanta, GA 30329-2305.

ASHRAE *Handbook of Fundamentals*, 1993.

2.3.5 ASME Publications. American Society of Mechanical Engineers, Three Park Avenue, New York, NY 10016-5990.

ASME *Boiler and Pressure Vessel Code*, "Rules for the Construction of Unfired Pressure Vessels," 1998.

2.3.6 ASTM Publications. ASTM International, 100 Barr Harbor Drive, P.O. Box C700, West Conshohocken, PA 19428-2959.

ASTM A 6/A 6M, *Standard Specification for General Requirements for Rolled Structural Steel Bars, Plates, Shapes, and Sheet Piling*, 2001.

ASTM A 27/A 27M, *Standard Specification for Steel Castings, Carbon, for General Application*, 2000.

ASTM A 36/A 36M, *Standard Specification for Carbon Structural Steel*, 2001.

ASTM A 53, *Standard Specification for Pipe, Steel, Black and Hot-Dipped, Zinc-Coated, Welded and Seamless*, 2001.

ASTM A 105/A 105M, *Standard Specification for Carbon Steel Forgings for Piping Applications*, 2001.

ASTM A 106, *Standard Specification for Seamless Carbon Steel Pipe for High-Temperature Service*, Rev. A, 1999.

ASTM A 108, *Standard Specification for Steel Bars, Carbon, Cold-Finished, Standard Quality*, 1998.

ASTM A 131/A 131M, *Standard Specification for Structural Steel for Ships*, 2001.

ASTM A 139, *Standard Specification for Electric-Fusion (Arc)-Welded Steel Pipe (NPS 4 and over)*, 2000.

ASTM A 181/A 181M, *Standard Specification for Carbon Steel Forgings, for General-Purpose Piping*, 2001.

ASTM A 283/A 283M, *Standard Specification for Low- and Intermediate-Tensile Strength Carbon Steel Plates*, Rev. A, 2000.

ASTM A 285/A 285M, *Standard Specification for Pressure Vessel Plates, Carbon Steel, Low- and Intermediate-Tensile Strength*, 2001.

ASTM A 307, *Standard Specification for Carbon Steel Bolts and Studs, 60,000 psi Tensile Strength*, 2000.

ASTM A 502, *Standard Specification for Steel Structural Rivets*, 1993.

ASTM A 516/A 516M, *Standard Specification for Pressure Vessel Plates, Carbon Steel, for Moderate- and Lower-Temperature Service*, 2001.

ASTM A 572/A 572M, *Standard Specification for High-Strength Low-Alloy Columbium-Vanadium Structural Steel*, 2001.

ASTM A 615/A 615M, *Standard Specification for Deformed and Plain Billet-Steel Bars for Concrete Reinforcement*, 2001.

ASTM A 668/A 668M, *Standard Specification for Steel Forgings, Carbon and Alloy, for General Industrial Use*, 2001.

ASTM A 675/A 675M, *Standard Specification for Steel Bars, Carbon, Hot-Wrought, Special Quality, Mechanical Properties*, Rev. A, 2000.

ASTM A 992/A 992M, *Standard Specification for Steel for Structural Shapes for Use in Building Framing*, 2002.

ASTM A 1011, *Standard Specification for Steel, Sheet and Strip, Hot-Rolled, Carbon, Structural, High-Strength Low-Alloy and High-Strength Low-Alloy with Improved Formability*, 2001.

ASTM C 578, *Standard Specification for Rigid, Cellular Polystyrene Thermal Insulation*, 2001.

ASTM C 591, *Standard Specification for Unfaced Preformed Rigid Cellular Polyisocyanurate Thermal Insulation*, 2001.

ASTM D 751, *Standard Test Methods for Coated Fabrics*, 2001.

ASTM D 1171, *Standard Test Method for Rubber Deterioration — Surface Ozone Cracking Outdoors or Chamber (Triangular Specimens)*, 1999.

ASTM D 1183, *Standard Test Methods for Resistance of Adhesives to Cyclic Laboratory Aging Conditions*, 1996.

ASTM D 1751, *Standard Specification for Preformed Expansion Joint Filler for Concrete Paving and Structural Construction (Nonextruding and Resilient Bituminous Types)*, 1999.

ASTM D 2261, *Standard Test Method for Tearing Strength of Fabrics by the Tongue (Single Rip) Procedure (Constant-Rate-of-Extension Tensile Testing Machine)*, 1996.

Copyright National Fire Protection Association
Provided by IHS under license with NFPA
No reproduction or networking permitted without license from IHS
Not for Resale

2.3.7 AWPA Publications. American Wood Preservers Association, 7735 Old Georgetown Avenue N.W., Suite 500, Washington, DC 20036.

Standard Specifications of the American Wood Preservers Association by the Empty-Cell Process, July 1, 2001.

2.3.8 AWS Publications. American Welding Society, 550 N.W. LeJeune Road, Miami, FL 33126.

AWS A5.1, *Specification for Carbon Steel Electrodes for Shielded Metal Arc Welding*, 1991.

AWS D1.1, *Structural Welding Code — Steel*, 1998.

2.3.9 AWWA Publications. American Water Works Association, 6666 West Quincy Avenue, Denver, CO 80235.

AWWA C652, *Disinfection of Water-Storage Facilities*, 1992.

AWWA D100, *Welded Steel Tanks for Water Storage*, 1996.

AWWA D102, *Coating Steel Water-Storage Tanks*, 1997.

AWWA D103, *Factory-Coated Bolted Steel Tanks for Water Storage*, 1997.

AWWA D110, *Wire- and Strand-Wound, Circular-Prestressed Concrete Water Tanks*, 1995.

AWWA D115, *Circular-Prestressed Concrete Water Tanks with Circumferential Tendons*, 1995.

AWWA D120, *Standard for Thermosetting Fiberglass-Reinforced Plastic Tanks*, 2001.

2.3.10 NWTI Publications. National Wood Tank Institute, 5500 N. Water St., P.O. Box 2755, Philadelphia, PA 19120.

NWTI Bulletin S82, *Specifications for Tanks and Pipes*, 1982.

2.3.11 SSPC Publications. Society for Protective Coatings, 40 24th Street, 6th Floor, Pittsburgh, PA 15222-4656.

SSPC Systems and Specifications Steel Structures Painting Manual, Volume 2, Chapter 5, 1991.

SSPC SP 6, *Joint Surface Preparation Standard Commercial Blast Cleaning*, 2000.

SSPC SP 8, *Pickling*, 2000.

SSPC SP 10, *Joint Surface Preparation Standard Near-White Blast Cleaning*, 2000.

2.3.12 U.S. Government Publications. U.S. Government Printing Office, Washington, DC 20402.

Title 29, Code of Federal Regulations, Part 1910 (OSHA).

Federal Standard 191 Method.

Federal Test Method Standard 601.

2.3.13 Other Publications.

Merriam-Webster's Collegiate Dictionary, 11th edition, Merriam-Webster, Inc., Springfield, MA, 2003.

2.4 References for Extracts in Mandatory Sections. (Reserved)

Chapter 3 Definitions

3.1 General. The definitions contained in this chapter shall apply to the terms used in this standard. Where terms are not defined in this chapter or within another chapter, they shall be defined using their ordinarily accepted meanings within the context in which they are used. *Merriam-Webster's Collegiate Dictionary*, 11th edition, shall be the source for the ordinarily accepted meaning.

3.2 NFPA Official Definitions.

3.2.1* Approved. Acceptable to the authority having jurisdiction.

3.2.2* Authority Having Jurisdiction (AHJ). An organization, office, or individual responsible for enforcing the requirements of a code or standard, or for approving equipment, materials, an installation, or a procedure.

3.2.3 Labeled. Equipment or materials to which has been attached a label, symbol, or other identifying mark of an organization that is acceptable to the authority having jurisdiction and concerned with product evaluation, that maintains periodic inspection of production of labeled equipment or materials, and by whose labeling the manufacturer indicates compliance with appropriate standards or performance in a specified manner.

3.2.4* Listed. Equipment, materials, or services included in a list published by an organization that is acceptable to the authority having jurisdiction and concerned with evaluation of products or services, that maintains periodic inspection of production of listed equipment or materials or periodic evaluation of services, and whose listing states that either the equipment, material, or service meets appropriate designated standards or has been tested and found suitable for a specified purpose.

3.2.5 Shall. Indicates a mandatory requirement.

3.2.6 Should. Indicates a recommendation or that which is advised but not required.

3.2.7 Standard. A document, the main text of which contains only mandatory provisions using the word "shall" to indicate requirements and which is in a form generally suitable for mandatory reference by another standard or code or for adoption into law. Nonmandatory provisions shall be located in an appendix or annex, footnote, or fine-print note and are not to be considered a part of the requirements of a standard.

3.3 General Definition.

3.3.1 Holiday. A discontinuity in the coating system that includes, but is not limited to, voids, cracks, pinholes, or scratches.

Chapter 4 General Information

4.1 Capacity and Elevation.

4.1.1* The size and elevation of the tank shall be determined by conditions at each individual property after due consideration of all factors involved.

4.1.2 Wherever possible, standard sizes of tanks and heights of towers shall be as specified in 5.1.3, 6.1.2, 8.1.3, and Section 9.2.

4.1.3 For suction tanks, the net capacity shall be the number of U.S. gallons (cubic meters) between the inlet of the overflow and the level of the vortex plate.

Copyright National Fire Protection Association
Provided by IHS under license with NFPA
No reproduction or networking permitted without license from IHS
Not for Resale

4.2 Location of Tanks.

4.2.1 The location of tanks shall be such that the tank and structure are not subject to fire exposure.

4.2.1.1 If lack of yard room makes this impracticable, the exposed steel work shall be suitably fireproofed or shall be protected by open sprinklers *(see A.13.1.1)*.

4.2.1.2 Fireproofing, where necessary, shall be provided for steelwork within 20 ft (6.1 m) of exposures, combustible buildings or windows, and doors from which fire might issue.

4.2.1.3 Where used for supports near combustible construction or occupancy inside the building, steel or iron shall be fireproofed 6 ft (1.8 m) above combustible roof coverings, and within 20 ft (6.1 m) of windows and doors from which fire might issue.

4.2.1.4 Steel beams or braces that join two building columns that support a tank structure shall also be suitably fireproofed where near combustible construction or occupancy.

4.2.1.5 Interior timber shall not be used to support or brace tank structures.

4.2.2 Fireproofing, where required, shall have a fire resistance rating of not less than 2 hours.

4.2.3 Foundations or footings shall furnish adequate support and anchorage for the tower.

4.2.4 If the tank or supporting trestle is to be placed on a building, the building shall be designed and built to carry the maximum loads.

4.3 Tank Materials.

4.3.1 Materials shall be limited to steel, wood, concrete, coated fabrics, and fiberglass-reinforced plastic tanks.

4.3.2 The elevated wood and steel tanks shall be supported on steel towers or reinforced concrete towers.

4.4 Workmanship.

4.4.1 In addition to complying with the requirements of this standard, it is expected that the manufacturers of approved structures will also follow the spirit of the standard, by using their experience and ability to create structures that shall prove reliable under all specified conditions.

4.4.1.1 Manufacturers shall replace all parts that are defective due to faulty materials or workmanship and shall replace all parts that fail to comply with this standard.

4.4.2 The contractor's representatives shall provide careful inspection during shop fabrication and field erection.

4.4.2.1 The inspection shall include, but shall not be limited to, a check of the following:

(1) The thickness of butt-welded plates in tanks and tubular columns
(2) The appearance of welding in tank plates where a balcony is omitted and in tubular columns and at struts, except near the ladder and base of the structure
(3) The extent of inaccessible dents and out-of-roundness of tubular columns and struts

4.5 Plans.

4.5.1 The contractor shall furnish stress sheets and plans required by the purchaser and the authority having jurisdiction for approval or for obtaining building permits and licenses for the erection of the structure.

4.5.2 Approval of Layouts.

4.5.2.1 Complete information regarding the tank piping on the tank side of the connection to the yard or sprinkler system shall be submitted to the authority having jurisdiction for approval.

4.5.2.2 The information submitted shall include the following:

(1) Size and arrangement of all pipes
(2) Size, location, and type of all valves, tank heater, and other accessories
(3) Steam pressures available at the heater
(4) Arrangement of, and full information regarding, the steam supply and return system together with pipe sizes
(5) Details of construction of the frostproof casing
(6) Where heating is required, heat loss calculations
(7) Structural drawings and calculations
(8) Seismic bracing details and calculations
(9) Operational settings and sequence of operation
(10) Monitoring equipment and connections
(11) Underground details including foundations, compaction, and backfill details and calculations
(12) Buoyancy calculations for buried tanks

4.6 Tank Contractor Responsibility.

4.6.1 Any necessary work shall be handled by experienced contractors.

4.6.1.1 Careful workmanship and expert supervision shall be employed.

4.6.1.2 The manufacturer shall warranty the tank for at least 1 year from the date of completion and final customer acceptance.

4.6.2 Upon completion of the tank construction contract, and after the contractor has tested the tank and made it watertight, the tank contractor shall notify the authority having jurisdiction so that the tank can be inspected and approved.

4.6.3 Cleaning Up.

4.6.3.1 During and upon completion of the work, the contractor shall remove or dispose of all rubbish and other unsightly material in accordance with NFPA 241.

4.6.3.2 The condition of the premises shall be as it was before tank construction.

4.7 Attachments to Tank Structures.

4.7.1 If tank structures are used to support signs, flagpoles, steel stacks, or similar objects, they shall be specifically designed for the purpose.

4.7.2* Confined entry requirements signs shall be posted at each shell manway.

4.8 Lightning Protection. To prevent lightning damage to tanks, protection shall be installed in accordance with Section 4.4 of NFPA 780.

4.9 Strength.

4.9.1 The material, as specified, shall be without defects that affect its strength or service.

Copyright National Fire Protection Association
Provided by IHS under license with NFPA
No reproduction or networking permitted without license from IHS
Not for Resale

4.9.2 The workmanship shall be of such quality that defects or injuries are not produced during manufacture or erection.

4.9.3 Specified unit stresses shall not be exceeded.

4.9.4 The structure and its details shall possess the requisite strength and rigidity.

4.10 National Standards. Materials produced and tested in accordance with the requirements of a recognized national standard and within the mechanical (strength), metallurgical, and chemical limitations of one of the material grades specified in this document shall be permitted.

4.11 Loads.

4.11.1 Dead Load.

4.11.1.1 The dead load shall be the estimated weight of all permanent construction and fittings.

4.11.1.2 The unit weight of steel shall be considered to be 490 lb/ft^3 (7849 kg/m^3); the unit weight of concrete shall be considered to be 144 lb/ft^3 (2307 kg/m^3).

4.11.2 Live Load.

4.11.2.1 Under normal conditions, the live load shall be the weight of all the liquid when it overflows the top of the tank.

4.11.2.2 The unit weight of water shall be considered to be 62.4 lb/ft^3 (1000 kg/m^3).

4.11.2.3 Proper provisions shall be made for temporary stresses during erection.

4.11.2.4 Where roofs have slopes of less than 30 degrees, they shall be designed to support a uniform weight of 25 lb/ft^2 (122 kg/m^2) on the horizontal projection.

4.11.3 Wind Load.

4.11.3.1 Under normal conditions, the wind load or pressure shall be assumed to be 30 lb/ft^2 (147 kg/m^2) on vertical plane surfaces, 18 lb/ft^2 (88 kg/m^2) on projected areas of cylindrical surfaces, and 15 lb/ft^2 (73 kg/m^2) on projected areas of conical and double-curved plate surfaces.

4.11.3.2 Where designing for wind velocities over 100 mph (161 km/hr), all of these specified unit pressures shall be adjusted in proportion to the square of the velocity, assuming that the pressures are for 100 mph (161 km/hr).

4.11.4 Earthquake Load.

4.11.4.1 Tank structures shall comply with the local building code for seismic requirements.

4.11.4.2 Specific design criteria shall be contained in the appropriate chapter for the particular tank, or in local codes, whichever is more stringent.

4.11.4.3 Flat-bottom tanks shall be designed by a method that accounts for the sloshing of the contents (effective mass method).

4.11.5 Balcony, Platform, and Ladder Loads.

4.11.5.1 A vertical load of 1000 lb (454 kg) shall be assumed to be applied to any 10 ft^2 (0.93 m^2) of area on the balcony floor and on each platform, 500 lb (227 kg) applied to any 10 ft^2 (0.93 m^2) area on the tank roof, and 350 lb (159 kg) on each vertical section of ladder.

4.11.5.2 All of the structural parts and connections shall be designed to withstand such loads.

4.11.5.3 These specified loads shall not be required to be combined with snow loading.

4.11.6 Columns and Struts.

4.11.6.1 All steel columns and struts shall be designed in accordance with AWWA D100.

4.11.6.2 The minimum thickness for any columns in contact with water shall be 0.25 in. (6.4 mm).

4.11.6.3 Tubular sections shall not be flattened to form end connections.

4.11.7 Stress Increases.

4.11.7.1 Where wind or earthquake loads are considered in calculating stresses, the maximum permissible increase in working unit stresses shall be one-third, provided the resulting section is not less than required for dead and live loads alone.

4.11.7.2 Wind and earthquake loads shall not be required to be considered simultaneously.

4.11.8 Roof Construction.

4.11.8.1 The roof shall be designed to withstand the forces anticipated during the erection, inspection, testing, and maintenance of the tank.

4.11.8.2 The maximum allowable uniform live load (in pounds per square foot) and the maximum allowable concentrated load (in pounds) shall be identified on the design drawings and tank nameplate.

4.12 Welding. All welding shall be completed in accordance with AWWA D100, NFPA 241, and ASME *Boiler and Pressure Vessel Code,* Section IX.

4.13 Roofs.

4.13.1* All tanks shall have roofs.

4.13.1.1 OSHA-compliant (29 CFR 1910) standard railing shall be placed around the roof manholes and other accessories that require access.

4.13.2 A perimeter roof guardrail is not required on lap-jointed bolted steel tanks when fitted with a manway platform, roof walkway, and guardrails.

4.13.3 Guardrails shall be constructed in accordance with OSHA 29 CFR 1910.

4.14 Roof Vent.

4.14.1 Where the steel roof is essentially airtight, there shall be a substantial vent above the maximum water level.

4.14.2 A vent pipe shall have a cross-sectional area equal to a minimum of one-half the area of the discharge pipe(s) or fill pipe, whichever is the larger.

4.14.3 A corrosion-resistant screen or perforated plate with ⅜ in. (9.5 mm) holes, to exclude birds or other animals, shall be provided and have a net area at least equal to the vent line.

4.14.4 In the case of a screen, this requires a gross area at least one and one-half times the cross-sectional area of the discharge pipe(s) or fill pipe, whichever is larger.

4.14.5 The screen or perforated plate shall be protected against the accumulation of sleet.

4.14.6 The weather hood above the perforated plate or screen, or its equivalent, shall be readily removable.

Copyright National Fire Protection Association
Provided by IHS under license with NFPA
No reproduction or networking permitted without license from IHS
Not for Resale

4.14.7 The overflow pipe shall not be included as vent area.

4.14.8 The vent shall be permitted to be combined with the roof finial.

4.14.9 Equivalent venting shall be permitted to be used, provided the area cannot be obstructed by sleet, and the ingress of birds or other animals shall be prevented.

4.14.10 Where dual service is specified and where local health departments require screening vents against insects, a nonmetallic screen or special fail-safe vent shall be provided to minimize the risk in the event that the insect screens frost over.

4.14.11 A roof vent attached to a flanged neck shall be installed on steel tanks prior to entering the tank.

4.14.11.1 The flanged neck shall be designed to accommodate an adequately sized exhaust fan.

4.15 Test Reports. Copies of mill test reports for steel plates and certificates of compliance for bolts and other structural members shall be maintained at the premises of the vendor and shall be made available for review by the purchaser.

Chapter 5 Welded-Steel Gravity Tanks and Suction Tanks

5.1 General.

5.1.1 This chapter shall apply to the design, fabrication, and erection of welded-steel gravity water tanks, including pump suction tanks.

5.1.2 Capacity.

5.1.2.1 The capacity of the tank shall be the number of U.S. gallons (cubic meters) available above the outlet opening.

5.1.2.2 The net capacity between the outlet opening of the discharge pipe and the inlet of the overflow shall be equal to at least the rated capacity.

5.1.2.3 The net capacity for gravity tanks with large plate risers shall be the number of U.S. gallons (cubic meters) between the inlet of the overflow and the designated low-water level line.

5.1.3 Standard Sizes.

5.1.3.1 The standard net capacity sizes of steel tanks shall be as follows:

(1) 5000 gal (18.93 m^3)
(2) 10,000 gal (37.85 m^3)
(3) 15,000 gal (56.78 m^3)
(4) 20,000 gal (75.70 m^3)
(5) 25,000 gal (94.63 m^3)
(6) 30,000 gal (113.55 m^3)
(7) 40,000 gal (151.40 m^3)
(8) 50,000 gal (189.25 m^3)
(9) 60,000 gal (227.10 m^3)
(10) 75,000 gal (283.88 m^3)
(11) 100,000 gal (378.50 m^3)
(12) 150,000 gal (567.75 m^3)
(13) 200,000 gal (757.00 m^3)
(14) 300,000 gal (1135.50 m^3)
(15) 500,000 gal (1892.50 m^3)

5.1.3.2 Tanks of other sizes shall be permitted.

5.1.4 Form. Steel tanks shall be permitted to be of any form desired, provided they conform to all requirements of this standard.

5.2 Materials.

5.2.1 Plates, Shapes, and Tubular Columns.

5.2.1.1 Plates. Plate materials shall be of open-hearth, electric furnace, or basic oxygen process steel that conforms to the following ASTM specifications:

(1) ASTM A 36/A 36M
(2) ASTM A 283/A 283M, Grades A, B, C, and D

5.2.1.2 Where plates of thicknesses greater than ¾ in. (19.1 mm) are used, ASTM A 283, Grade D, shall not be used. ASTM A 131, Grades A, B, and C; ASTM A 285, Grades A, B, and C; or ASTM A 516, Grades 55 and 60, shall be used as alternatives.

5.2.1.3 Basis of Furnishing Plates. Plates shall be furnished, based on weight, with permissible underrun and overrun in accordance with the tolerance table for plates ordered to weight in ASTM A 6.

5.2.1.4 Shapes. Structural materials shall be open-hearth, electric furnace, or basic oxygen process steel that conforms to ASTM A 36, or ASTM A 131, Grades A, B, and D, or ASTM A 992/A 992M.

5.2.1.5 Copper-bearing steel that contains approximately 0.20 percent copper shall be permitted to be used. In all other respects, steel shall conform to the specifications of 5.2.1.1, 5.2.1.3, and 5.2.1.4.

5.2.2 Bolts, Anchor Bolts, and Rods.

5.2.2.1 Bolts and anchor bolts shall conform to ASTM A 307, Grade A or Grade B.

5.2.2.2 ASTM A 36 shall be considered an acceptable alternative material for anchor bolts. Rods shall be open-hearth, electric furnace, or basic oxygen process steel that conforms to ASTM A 36.

5.2.3* Forgings.

5.2.3.1 Steel used for forgings shall be made only by the open-hearth process.

5.2.3.2 Forgings shall conform to the following ASTM specifications:

(1) ASTM A 105
(2) ASTM A 668 Class D
(3) ASTM A 181, Class 70

5.2.4 Castings. Castings shall conform to ASTM A 27, Grade 60-30 full annealed.

5.2.5 Reinforcing Steel. Reinforcing steel shall comply with ASTM A 615, Grade 40 or Grade 60.

5.2.6 Filler Metal Electrodes.

5.2.6.1 Manual, shielded metal arc welding electrodes shall conform to the requirements of AWS A5.1.

5.2.6.2 Electrodes shall be of any E60XX or E70XX classification that is suitable for the electric current characteristics, the position of welding, and other conditions of intended use.

5.2.6.3 Electrodes for other welding processes shall be in accordance with applicable AWS specifications for filler metal.

Copyright National Fire Protection Association
Provided by IHS under license with NFPA
No reproduction or networking permitted without license from IHS
Not for Resale

5.3 Earthquake Load.

5.3.1 Tanks shall meet the requirements for resistance to earthquake damage in accordance with the earthquake design provisions of AWWA D100.

5.3.2 For seismic anchor-bolt loading, the following formula shall be used:

$$T_s = \frac{4M_s}{ND} - \frac{W'}{N}$$

where:

T_s = seismic bolt tension (lb)
M_s = seismic overturning moment (ft lb)
W' = weight of tank shell and portion of roof carried by shell (lb)
N = number of anchor bolts
D = tank diameter (ft)

5.4 Unit Stresses. The maximum stresses in pounds per square inch (megapascals) that are produced by the loads specified in Sections 4.11 and 5.3, or any combination of them, shall not exceed the values in Table 5.4.

5.5 Design Details.

5.5.1 Minimum Thickness.

5.5.1.1 The minimum thickness of any part of the structure shall be 3⁄16 in. (4.8 mm) for parts not in contact with water contents and ¼ in. (6.4 mm) for parts in contact with water contents.

5.5.1.2 The controlling thickness of rolled shapes for the purposes of the foregoing stipulations shall be taken as the mean thickness of the flanges, regardless of web thickness.

5.5.1.3 The minimum thickness of tubular columns and struts shall be ¼ in. (6.4 mm).

5.5.1.4 Round or square bars used for wind bracing shall have a minimum diameter or width of ¾ in. (19.1 mm).

5.5.1.5 Bars of other shapes, if used, shall have a total area at least equal to a ¾ in. (19.1 mm) round bar.

5.5.1.5.1 Roof plates for suction tanks with cone roofs shall be permitted to be 0.1792 in. (7 gauge) sheet.

5.5.1.6 Cylindrical shell plates in contact with water shall have minimum thicknesses as specified in accordance with Table 5.5.1.6.

5.5.2 Thickness for Corrosion.

5.5.2.1 If interior bracing is required to support the water content, 1⁄16 in. (1.6 mm) additional thickness shall be added to the calculated sections.

5.5.2.2 The sections shall be open to facilitate cleaning and painting.

5.5.2.2.1 Tubular sections shall be hermetically sealed to prevent internal corrosion.

5.5.2.3 The plates of tanks that are to contain salt or alkaline water shall be 1⁄16 in. (1.6 mm) thicker than calculated.

Table 5.4 Maximum Bending Stress

	psi	MPa
Tension: On net section, rolled steel	15,000	103.43
Tension: Anchor bolts	15,000	103.43
Bending:		
Tension on extreme fibers, except column base plates	15,000	103.43
Column base plates	20,000	137.90
Compression on extreme fibers of rolled sections, and plate girders and built-up members for values as follows:		
$\frac{ld}{bt}$ not in excess of 600	15,000	103.43
$\frac{ld}{bt}$ in excess of 600	9,000,000	62,055
	$\frac{ld}{bt}$	$\frac{(l)(d)}{(b)(t)}$
where l is the unsupported length; d is the depth of the member; b is the width; and t is the thickness of its compression flange; all in in. (mm); except that l shall be assumed to be twice the length of the compression flange of a cantilever beam not fully stayed at its outer end against translation or rotation.		
Pins, extreme fiber	22,500	155.15
Cast steel	11,250	77.57

--`,,```,,,,````-`-`,,`,,`,`,,`---
Copyright National Fire Protection Association
Provided by IHS under license with NFPA
No reproduction or networking permitted without license from IHS
Not for Resale

5.5.3 Thickness of Tank Plates.

5.5.3.1 Tank plates shall be designed on the basis of the following maximum membrane tensile stresses, which shall be reduced for the joint efficiencies set forth in AWWA D100.

5.5.3.2* Plate surfaces that are susceptible to complete stress analysis shall be designed on the basis of a maximum membrane tensile stress of 15,000 psi (103.43 MPa).

5.5.3.3 Plate surfaces that are not susceptible to complete stress analysis shall also be designed on the basis of a maximum membrane tensile stress of 15,000 psi (103.43 MPa) after making reasonable allowances for such loads and stresses that cannot be accurately determined.

5.5.3.3.1 The maximum membrane tensile stress shall in no case exceed 11,000 psi (75.85 MPa) when calculated, assuming that the concentrated reactions of supporting members are uniformly distributed between such reactions.

5.5.3.3.2 Therefore, the lowest cylindrical courses of tanks with suspended bottoms and the suspended bottoms themselves shall be designed for a maximum membrane tensile stress of 11,000 psi (75.85 MPa), reduced for the joint efficiencies.

5.5.3.4 As an alternative to 5.5.3.1 and 5.5.3.2, tank shell plates for suction tanks shall be permitted to be designed on the basis of the stresses, material selection, and inspection set forth in Section 14 of AWWA D100, provided all requirements of Section 14 of the standard are met.

5.5.3.5 Where compressive stresses exist, the selected plate thickness shall prevent local buckling.

5.5.4 Thickness of Flat Bottoms.

5.5.4.1 The thickness of plates in flat bottoms shall be not less than those given in Table 5.5.4(a) and Table 5.5.4(b).

5.5.4.2 Any corrosion allowance specified shall be added to the value from the table.

5.5.5 Accessibility of Bottoms. Grillages shall be designed so that the tank bottom and beams are accessible for inspection and painting.

5.5.6 Net Sections. Net sections shall be used in calculating the tensile stress in plates and members.

5.5.7 Load Location.

5.5.7.1 When calculating the thickness of plates that are stressed by the weight or pressure of the tank contents, the pressure at the lower edge of each ring shall be assumed to act undiminished on the entire area of the ring.

5.5.7.1.1 This requirement shall not apply to plate thickness calculated in accordance with 5.5.3.

5.5.8 Four-Way Junctions.

5.5.8.1 In welded tanks, the longitudinal joints in adjacent circumferential courses shall be staggered or shall be aligned.

5.5.8.2 Welded joints that cross each other shall be grooved and welded continuously through the intersections.

5.5.8.3 Permission to use four-way junctions shall not apply to plate thickness calculated in accordance with 5.5.3.

5.5.9 Opening Reinforcement.

5.5.9.1 All openings of more than 4 in. (102 mm) in diameter that are located in the shell, suspended bottom, larger steel plate riser, or tubular support shall be reinforced.

5.5.9.2 The reinforcement shall be either the flange of a fitting, an additional ring of metal, excess plate metal above that actually required, or a combination of these methods.

5.5.9.3 The opening diameter shall be considered to be the maximum dimension of the hole cut in the plate perpendicular to the direction of maximum stress.

Table 5.5.1.6 Minimum Thickness of Cylindrical Shell Plates

	Diameter							
	<50 ft	**<15.2 m**	**50 ft–120 ft**	**15.2 m–35.6 m**	**120 ft–200 ft**	**35.6 m–61 m**	**>200 ft**	**>61 m**
Bottom rings	¼ in.	6.4 mm	¼ in.	6.4 mm	5⁄16 in.	7.9 mm	⅜ in.	9.5 mm
Upper rings	3⁄16 in.	4.8 mm	¼ in.	6.4 mm	5⁄16 in.	7.9 mm	⅜ in.	9.5 mm

Table 5.5.4(a) Thickness of Bottom Plates for Flat-Bottom Tanks (in inches)

		Depth of Water											
Type of Support	**Length (ft)**	**10 ft**	**12 ft**	**14 ft**	**16 ft**	**18 ft**	**20 ft**	**22 ft**	**24 ft**	**26 ft**	**28 ft**	**30 ft**	**40 ft**
Steel or concrete beams	12	5⁄16	5⁄16	5⁄16	5⁄16	5⁄16	5⁄16	5⁄16	5⁄16	5⁄16	5⁄16	5⁄16	⅜
	14	5⁄16	5⁄16	5⁄16	5⁄16	5⁄16	5⁄16	5⁄16	5⁄16	5⁄16	⅜	⅜	7⁄16
	16	5⁄16	5⁄16	5⁄16	5⁄16	5⁄16	5⁄16	⅜	⅜	⅜	⅜	⅜	7⁄16
	18	5⁄16	5⁄16	5⁄16	5⁄16	⅜	⅜	⅜	⅜	7⁄16	7⁄16	7⁄16	½
	20	5⁄16	5⁄16	⅜	⅜	⅜	7⁄16	7⁄16	7⁄16	7⁄16	½	½	9⁄16
	24	⅜	⅜	7⁄16	7⁄16	7⁄16	½	½	½	9⁄16	9⁄16	9⁄16	11⁄16
Concrete slab or earth grade		¼	¼	¼	¼	¼	¼	¼	¼	¼	¼	¼	¼

Copyright National Fire Protection Association
Provided by IHS under license with NFPA
No reproduction or networking permitted without license from IHS
Not for Resale

Table 5.5.4(b) Thickness of Bottom Plates for Flat-Bottom Tanks (in millimeters)

Type of Support	Length (m)	Depth of Water										
		3.1 m	3.7 m	4.3 m	4.9 m	5.5 m	6.1 m	6.8 m	7.3 m	7.9 m	8.5 m	9.1 m	12.2 m
Steel or concrete beams	3.7	7.9	7.9	7.9	7.9	7.9	7.9	7.9	7.9	7.9	7.9	7.9	9.5
	4.3	7.9	7.9	7.9	7.9	7.9	7.9	7.9	7.9	7.9	9.5	9.5	11.1
	4.9	7.9	7.9	7.9	7.9	7.9	7.9	9.5	9.5	9.5	9.5	9.5	11.1
	5.5	7.9	7.9	7.9	7.9	9.5	9.5	9.5	9.5	11.1	11.1	11.1	12.7
	6.1	7.9	7.9	9.5	9.5	9.5	11.1	11.1	11.1	11.1	12.7	12.7	14.3
	7.3	9.5	9.5	11.1	11.1	11.1	12.7	12.7	12.7	14.3	14.3	14.3	17.5
Concrete slab or earth grade		6.4	6.4	6.4	6.4	6.4	6.4	6.4	6.4	6.4	6.4	6.4	6.4

5.5.9.3.1 Excess plate metal used for joint efficiency shall not meet the requirements for opening reinforcement if the center of the opening is within one opening diameter of any plate seam or point of support attachment.

5.5.9.4 Welding shall be provided to transmit the full net strength of the reinforcing ring or flange to the plate.

5.5.9.4.1 In computing the net reinforcing area of a fitting, such as a boilermaker's flange or a manhole saddle that has a neck, the material in the neck shall be considered as part of the reinforcement for a distance, measured from the surface of the parent plate or from the surface of an intervening reinforcement plate, that is equal to four times the thickness of the material in the neck.

5.5.10 Roof Supports. The supports for tank roofs that do not contain water shall be designed in accordance with the steel construction specifications of the American Institute of Steel Construction.

5.5.10.1 Rafters that are in contact with a steel roof, have a slope of less than 2 in. in 12 in. (51 mm in 305 mm), and consist of beam or channel shapes less than 15 in. (381 mm) deep shall be considered to be adequately braced in the lateral position by friction between the roof plate and the top flange.

5.5.10.2 The roof purlin depth shall be less than $\frac{1}{30}$ of the span length.

5.5.10.3 The maximum slenderness ratio, L/r, for columns that support the roof shall be 175. The spacing between rafters, as measured along the tank circumference, shall not exceed 2π ft (0.61π m).

5.5.11 Welded Joints. The types of joints used and their design shall conform to AWWA D100.

5.6 Workmanship.

5.6.1 Plate Edges. The plate edges to be welded shall be universal mill edges or shall be prepared by shearing, machining, chipping, or mechanically guided oxygen cutting. Where the edges of plates are oxygen cut, the surface obtained shall be uniform, smooth, and shall be cleaned of slag accumulations before welding.

5.6.1.1 Edges of irregular contour shall be permitted to be prepared by manually guided oxygen cutting.

5.6.2 Rolling. Plates shall be cold-rolled to suit the curvature of the tank and the erection procedure in accordance with Table 5.6.2.

Table 5.6.2 Plate Dimensions

Plate Thickness	Minimum Diameter for Plates Not Rolled
< ⅜ in. (9.5 mm)	40 ft (12.2 m)
⅜ in. to < ½ in. (9.5 mm to < 12.7 mm)	60 ft (18.3 m)
½ in. to < ⅝ in. (12.7 mm to < 15.9 mm)	120 ft (36.6 m)
⅝ in. (15.9 mm) and heavier	Must be rolled for all diameters

5.6.3 Double-Curved Plates. Plates that are curved in two directions shall be pressed cold or hot or shall be dished with a mortar and pestle die by repeated applications.

5.6.4 Milling Columns. The ends of columns shall be milled to provide a satisfactory bearing unless the design provides sufficient welding to resist the total calculated loads.

5.6.5 Fitting Roofs.

5.6.5.1 The roof shall fit tightly to the top of the tank to prevent the circulation of air over the surface of the water.

5.6.5.2 Where a spider is used, it shall not obstruct the flow of water into the overflow inlet.

5.6.6 Preventing Ice Damage. During the construction, the contractor shall keep the tank, structure, and building roofs free of ice caused by leakage until the tank equipment is made watertight.

5.6.7 Coating for Bottom Plates on Soil or Concrete.

5.6.7.1* The underside of all bottom plates shall be protected against corrosion by one of the methods required by 5.6.7.1.1 through 5.6.7.1.3.

5.6.7.1.1 Two coats of paint shall be applied after the bottom has been completely welded. When the underside of the tank bottom surface is painted and lime (optional) is added to the base material on the tank underside, the compatibility of the paint and the lime shall be checked with the paint supplier.

5.6.7.1.2 Lime shall be applied to a clean sand base. The pH of the lime/sand mix shall be between 6.5 and 7.5. The chloride content of the under-bottom material shall be less than 300 ppm. The sulfate content shall be less than 1000 ppm.

Copyright National Fire Protection Association
Provided by IHS under license with NFPA
No reproduction or networking permitted without license from IHS
Not for Resale

5.6.7.1.3 Where permitted by environmental authorities, an oiled sand cushion shall be permitted to be used. The sand shall be coated but shall not be running with excess oil.

5.6.7.2* Where the tank bottom is placed on oiled sand, the sand shall be saturated to a depth of 4 in. (102 mm) with a suitable petroleum-base oil.

5.7 Accessories.

5.7.1 Connections. Connections shall be provided on the tank for the necessary pipes, braces, frost-casting, and walkway supports.

5.7.2 Roof Anchorage. Each roof plate shall be securely fastened to the top of the tank.

5.7.3 Roof Hatch.

5.7.3.1 An easily accessible roof hatch or roof door having a minimum opening dimension of 24 in. (610 mm) shall be provided in the roof.

5.7.3.2 The hatch cover shall be built of steel plate with a minimum thickness of 3⁄16 in. (4.8 mm).

5.7.3.3 The hatch opening shall have a curb that is a minimum of 4 in. (102 mm) high, and the cover shall have a minimum downward overlap of 2 in. (51 mm).

5.7.3.4 A catch shall be provided to keep the cover closed.

5.7.3.5 A second roof hatch shall be placed 180 degrees from the existing roof hatch with a ladder to access the tank floor.

5.7.4 Ladders — General.

5.7.4.1 Outside and inside steel ladders that are arranged for convenient passage from one to the other and through the roof hatch shall be provided.

5.7.4.2 Ladders shall not interfere with the opening of the hatch cover and shall not incline outward from the vertical at any point.

5.7.4.3 For pedestal-supported tanks, the ladder shall be placed inside an access tube that extends through the center of the tank.

5.7.5 Outside Fixed Shell and Roof Ladder.

5.7.5.1 The outside tank ladder of suction tanks and multiple-column-supported gravity tanks shall be fixed a minimum of 7 in. (178 mm) between the tank side and the centerline of rungs and shall be rigidly bolted or welded to brackets that are spaced a maximum of 12 ft (3.7 m) apart and that are welded to the tank plates.

5.7.5.2 The bottom bracket shall be located a maximum of 6 ft (1.8 m) above the base of the tank cylinder, and the ladder shall extend up the tank shell and radially along the roof, with the top bracket located within approximately 2 ft (0.61 m) of the roof hatch.

5.7.5.3 There shall be a minimum 1 ft (0.3 m) clearance at the sides and front of the ladder at the balcony.

5.7.5.4 All ladders shall be equipped with a cage, a rigid notched rail, or other listed ladder safety device.

5.7.6 Inside Ladder.

5.7.6.1 The inside fixed ladder provided for passage between the roof hatch and tank bottom shall not be rigidly connected to the bottom plates.

5.7.6.2 A ladder shall extend from the top to the bottom of the inside of the large steel riser pipes and shall be secured to the shell plates by brackets that are spaced a maximum of 12 ft (3.7 m) apart.

5.7.6.2.1 The upper bracket shall be located at the top of the riser.

5.7.6.3 All ladders over 20 ft (6.1 m) high shall be equipped with a cage, a rigid notched rail, or other listed ladder safety device.

5.7.7 Ladder Bars and Rungs.

5.7.7.1 Ladder side bars shall be not less than 2 in. × ½ in. (51 mm × 12.7 mm) or 2½ in. × ⅜ in. (64 mm × 9.5 mm).

5.7.7.2 Side bars shall be spaced at least 16 in. (406 mm) apart. Rungs shall be of at least ¾ in. (19.1 mm) round or square steel and shall be spaced 12 in. (305 mm) on their centers.

5.7.7.3 The rungs shall be firmly welded to the side bars.

5.7.7.4 Ladders and connections shall be designed to support a concentrated load of 350 lb (159 kg).

5.7.8 Painting Inaccessible Parts.

5.7.8.1 Parts that are inaccessible after fabrication, but that are subject to corrosion, shall be protected by paint before assembly.

5.7.8.1.1 This requirement shall not apply to the overlapping surfaces of single-welded lap joints above the high waterline.

5.7.8.2 Surfaces in watertight joints shall be coated with clear oil or lacquer.

5.7.9 Painting.

5.7.9.1 All interior surfaces of steel tanks that are exposed to water immersion or the vapor phase zone above the high water level shall be cleaned by near-white blasting in accordance with SSPC SP 10, or pickling in accordance with SSPC SP 8, and shall be primed in accordance with the requirements for "Inside Paint System No. 1" in AWWA D102.

5.7.9.2 All exterior surfaces and inside dry surfaces (pedestal tanks) shall be cleaned by commercial blasting in accordance with SSPC SP 6, or pickling in accordance with SSPC SP 8, and shall be primed with one coat of lead-free alkyd in accordance with the requirements for "Outside Paint System No. 1" of AWWA D102.

5.7.9.3 The appropriate primers for other interior and exterior paint systems shall be permitted to be used, provided permission is first obtained from the authority having jurisdiction.

5.7.9.4 After construction, all weld seams, unprimed margins, and any areas where the primer (if preprimed) has been damaged shall be blast-cleaned and patch-primed with the same primer.

5.7.9.5 All finish coat painting for interior surfaces (exposed to stored water) shall be in accordance with the requirements for "Inside Paint System No. 1" of AWWA D102, using the same basic system throughout.

5.7.9.5.1* Wax coating systems shall not be permitted.

5.7.9.6 Finish coat painting for all exterior and interior surfaces not exposed to stored water shall be in accordance with the requirements for "Outside Paint System No. 1" of AWWA D102, using two coats of aluminum or alkyd enamel in a color,

--`,,```,,,,````-`-`,,`,,`,`,,`---

Copyright National Fire Protection Association
Provided by IHS under license with NFPA
No reproduction or networking permitted without license from IHS

Not for Resale

as specified by the purchaser, to provide a minimum total system dry (not exposed to stored water) film thickness of 3.5 mils (0.09 mm) for aluminum finishes and 4.5 mils (0.1 mm) for alkyd enamels.

5.7.9.6.1 As provided for by "Outside Paint System No. 4" of AWWA D102, the purchaser shall be permitted to specify an additional complete coat of primer for a total minimum system dry film thickness of 5.0 mils (0.13 mm) for aluminum finishes and of 6.0 mils (0.15 mm) for alkyd enamels in cases of more severe atmospheric exposures.

5.7.10 Other finish coats shall be permitted to be used where they comply with AWWA D102 (excluding "Inside Paint System No. 5"), and with the approval of the authority having jurisdiction.

5.7.11* Painting Application. All painting shall be applied in accordance with the appropriate requirements of *SSPC Systems and Specifications Steel Structures Painting Manual*, Chapter 5.

5.7.12 The painting and priming systems described in 5.7.9 through 5.7.11 shall be lead free.

Chapter 6 Factory-Coated, Bolted Steel Tanks

6.1 General.

6.1.1* This chapter shall apply to the design, fabrication, and erection of bolted steel water tanks, including pump suction tanks with factory-applied coatings.

6.1.2 Standard Capacity. The standard capacity of bolted tanks varies with the number of panels added to the diameter and ranges from 4000 gal to approximately 500,000 gal (15.1 m^3 to approximately 1900 m^3) net capacity.

6.1.2.1 Tanks of other capacities shall be permitted.

6.1.3 Form.

6.1.3.1 Bolted tanks shall be cylindrical.

6.1.3.2 All joints, including vertical, horizontal, shell-to-roof, and shell-to-bottom plates or sheets, shall be field bolted.

6.1.3.3 Coatings shall be factory applied.

6.1.3.4 Bolt holes shall be shop-punched or drilled for field assembly.

6.1.3.5 Joints that are in contact with water and weather-tight joints shall be sealed.

6.2 Plate and Sheet Materials.

6.2.1 Plate and sheet materials shall be of open-hearth, electric furnace, or basic oxygen process steel that conforms to any of the following:

(1) ASTM A 36
(2) ASTM A 283, Grade C or Grade D
(3) ASTM A 1011
(4) ASTM A 572, Grade 42 or Grade 50

6.2.2 Plates and sheets shall be furnished on the basis of weight, with permissible underrun and overrun in accordance with the tolerance table for plates ordered to weight in ASTM A 6.

6.2.3 Structural Shapes.

6.2.3.1 Hot-rolled structural shapes shall conform to ASTM A 36 or ASTM A 992/A 992M.

6.2.3.2 Aluminum shapes shall be permitted to be used for portions of the tank that are not in contact with water and shall follow the design criteria in Appendix A of AWWA D103.

6.2.4 Tubular Columns.

6.2.4.1 Steel pipe shall be permitted to be used for tubular columns or other structural members, provided it complies with ASTM A 53, Type E or Type S, Grade B; ASTM A 139, Grade B; and API 5LC, Grade B; and provided the minimum wall thickness of any such material complies with the design requirements and the minimum thickness requirement of this standard.

6.2.4.2 The allowable underrun shall be subtracted from the nominal wall thickness when calculating the minimum pipe wall thickness.

6.2.4.3 Tubular sections shall not be flattened to form end connections.

6.2.5 Bolts, Anchor Bolts, and Nuts. Bolts, anchor bolts, and nuts shall conform to AWWA D103 and Section 12.4.

6.2.6* Forgings. Steel used for forging shall be made only by the open-hearth process. Forgings shall conform to the following ASTM specifications:

(1) ASTM A 105
(2) ASTM A 668

6.2.7 Filler Metal Electrodes.

6.2.7.1 Manual, shielded metal arc welding electrodes shall conform to the requirements of AWS A5.1.

6.2.7.2 Electrodes shall be of any E60XX or E70XX classification suitable for the electric current characteristics, the position of welding, and other conditions of intended use.

6.2.7.3 Electrodes for other welding processes shall be in accordance with applicable AWS specifications for filler metal.

6.2.8 Gasket.

6.2.8.1 Gasket material shall be of adequate tensile strength and resilience to obtain a leakproof seal at all seams and joints.

6.2.8.2 Gasket material shall be resistant to weather and ozone exposure and shall be in accordance with ASTM D 1171. Physical requirements shall conform to AWWA D103.

6.2.8.3 Gasket material shall be capable of resisting chlorination exposure in accordance with AWWA C652.

6.2.9 Sealant.

6.2.9.1 Sealants shall be supplied by the tank manufacturer. Sealants shall remain flexible over a temperature range of –40°F to 170°F (–40°C to 76.7°C).

6.2.9.2 Resistance to hardening and cracking shall be required. The sealant shall be solid with no plasticizers or extenders to cause shrinkage.

6.2.9.3 The sealant shall resist ozone and ultraviolet light and shall not swell or degrade under normal water storage conditions. In addition, the sealant shall be capable of resisting chlorination exposure in accordance with AWWA C652.

Copyright National Fire Protection Association
Provided by IHS under license with NFPA
No reproduction or networking permitted without license from IHS
Not for Resale

6.3 Earthquake Load.

6.3.1 Tanks shall meet requirements for resistance to earthquake damage in accordance with the earthquake design provisions of AWWA D103. For seismic anchor-bolt loading,

$$T_s = \frac{4M_s}{ND} - \frac{W'}{N}$$

where:
T_s = seismic bolt tension (lb)
M_s = seismic overturning moment (ft lb)
W' = weight of tank shell and portion of roof carried by shell (lb)
N = number of anchor bolts
D = tank diameter (ft)

6.3.2 Unit Stress of Shell Plates. The maximum stresses in pounds per square inch (megapascals) that are produced by the design loads in Section 4.12 shall not exceed the requirements of AWWA D103.

6.4 Design Details.

6.4.1 Minimum Steel Thickness. Steel plates or sheets shall meet the minimum design criteria in accordance with AWWA D103, as well as any additional requirements outlined in 6.4.1.1 through 6.4.1.4.

6.4.1.1 Roof sheets shall have a minimum thickness of 0.094 in. (2.4 mm).

6.4.1.1.1 Sheets on roofs having a slope of 1 in 2.75 or greater for which the tank diameter does not exceed 35 ft (10.7 m) shall be permitted to utilize a minimum thickness of 0.070 in. (1.8 mm), provided a suitable walkway is provided from the ladder to all appurtenances including, but not limited to, the roof hatch(es), roof vent(s), and controls for the water level and temperature.

6.4.1.2 Floor sheets shall have a minimum thickness of 0.105 in. (2.7 mm), provided the tank floor is supported on a granular base, on crushed stone, or on a concrete slab.

6.4.1.3 The minimum thickness of the first full height shell plate and starter ring (if applicable) shall be 0.1875 in. (4.8 mm).

6.4.1.3.1 This minimum thickness shall be permitted to be reduced, provided the design meets the following criteria:

(1) *Tension on the Net Section.* The tensile stress on the net section of a bolted connection shall not exceed the lesser of the values determined by the following formulas:

$$f_t = 0.5F_y\left(\frac{1.0 - 0.9r + 3rd}{s}\right) \le 0.5F_y$$

$$f_t = \frac{1}{3}F_u$$

where:
f_t = allowable tensile stress (psi)
F_y = published yield strength of the sheet material (psi)
r = force transmitted by the bolt or bolts at the section considered, divided by the tensile force in the member at that section; if r is less than 0.2, it can be taken equal to zero.
d = diameter of the bolt (in.)
s = spacing of the bolts perpendicular to the line of stress (in.)
F_u = ultimate strength of the sheet material (psi)

(2) *Shell Thickness.* The thickness of cylindrical shell plates stressed by the pressure of the tank contents shall be calculated by the following formula:

$$t = \frac{2.6\ HDSG}{f_t(S - d)}$$

where:
t = shell plate thickness (in.)
H = height of liquid from the top capacity line to the point of overflow to the bottom of the shell course being designed (ft)
D = tank diameter (ft)
S = bolt spacing in line perpendicular to line of stress (in.)
G = specific gravity of liquid (1.0 for water)
f_t = allowable tensile stress (psi)
d = bolt-hole diameter (in.)

6.4.1.4 The minimum thickness of the upper rings of shell plates shall be 0.105 in. (2.7 mm).

6.4.1.4.1 This minimum thickness shall be permitted to be reduced to no less than 0.094 in. (2.4 mm), provided that the design meets the criteria of 6.4.1.3.1.

6.5 Fabrication.

6.5.1 Parts shall be fabricated in accordance with AWWA D103 practices and tolerances.

6.5.2 Welding shall be limited to the shop installation of nozzles, vents, manway connections, and subassemblies. Field welding shall not be permitted.

6.5.3 Coatings shall be applied in accordance with AWWA D103.

6.5.4 All tank components shall be given a mark number for ease of assembly.

6.5.5* All coated parts shall be protected from damage during shipment.

6.6 Erection.

6.6.1 Bolted tanks shall be erected in accordance with the manufacturers' drawings, instructions, and AWWA D103 procedures to facilitate inspection for leaks.

6.6.1.1 Bolted steel floor plates shall be positioned directly on a minimum 4 mil (102 mm) polyethylene base that is arranged to allow waterflow from the center of the tank to the perimeter of the tank.

6.6.1.2 The polyethylene sheets shall be placed over the sloped base and shall be lapped a minimum of 18 in. (457 mm) on top of one another (the higher sheet overlapping the adjacent sheet) to allow drainage from the underside of the tank.

6.6.1.3 Polyethylene sheeting shall not be required for tanks with concrete slabs that also serve as the tank floor, provided the provisions of Section17.1 have been met.

6.6.2 The erector shall exercise care to properly install all parts of the tank including, but not limited to, gaskets and sealants.

6.6.3 Care in handling coated parts shall be exercised.

6.6.3.1 Any sections that experience damage to the factory-applied coatings shall be repaired or replaced in accordance with the manufacturers' instructions.

6.6.3.2 Damaged parts shall be replaced.

Copyright National Fire Protection Association
Provided by IHS under license with NFPA
No reproduction or networking permitted without license from IHS
Not for Resale

Chapter 7 Pressure Tanks

7.1 General.

7.1.1 Service. Pressure tanks shall be permitted to be used for limited private fire protection services, such as those covered by the following NFPA standards:

(1) NFPA 13
(2) NFPA 14
(3) NFPA 15

7.1.2 Pressure tanks shall not be used for any other purpose.

7.1.2.1 Pressure tanks approved by the authority having jurisdiction shall be permitted to be used for other purposes.

7.1.3 Capacity. The capacity shall be approved by the authority having jurisdiction.

7.1.4 Water and Air Pressure.

7.1.4.1 Pressure tanks shall be kept with a supply of water to meet the demand of the fire protection system as calculated in Chapter 14 of NFPA 13, for the duration required by Chapter 11 of NFPA 13.

7.1.4.1.1 The pressure shall be sufficient to push all of the water out of the tank while maintaining the necessary residual pressure required by Chapter 14 of NFPA 13, at the top of the system.

7.1.4.1.2 Where otherwise approved by the authority having jurisdiction, this requirement shall not apply.

7.1.5* Air Lock. Methods used for the prevention of air lock shall be approved by the authority having jurisdiction in each case.

7.1.6 Location. Pressure tanks shall be located above the top level of sprinklers.

7.1.6.1 Subject to the approval of the authority having jurisdiction, tanks shall be permitted to be located in the basement or elsewhere.

7.1.6.2 Subject to the approval of the authority having jurisdiction, tanks shall be permitted to be buried in accordance with the requirements of 7.1.10.

7.1.7 Construction.

7.1.7.1* General. Pressure tanks shall be constructed in accordance with the ASME *Boiler and Pressure Vessel Code*, "Rules for the Construction of Unfired Pressure Vessels," Section VIII, Division 1, Unfired Pressure Vessels.

7.1.7.1.1 This requirement shall not apply where otherwise specified herein.

7.1.7.2 Supports.

7.1.7.2.1 The supports shall be steel or reinforced concrete and shall be located in a manner that prevents sagging or vibration and that properly distributes the loads caused by the weight of the vessel when full of water.

7.1.7.2.2 Stresses in steel supports shall not exceed those permitted by Section 13.4 for steel towers.

7.1.7.2.3 Horizontal tanks shall have at least one support near each end of the tank that is located so that combined stresses in any part of the tank do not exceed those specified in 13.4.6.

7.1.7.3 Painting. Tanks shall be cleaned and painted inside and outside in accordance with the requirements of 5.7.9 through 5.7.12. An ASME Specifications for Material stamp and an ASME Standard Pressure Vessel stamp shall not be rendered illegible.

7.1.8 Marking.

7.1.8.1 General. All stamps required by the ASME specification shall be applied.

7.1.8.1.1 The nameplate or water-level marking shall be securely fastened without obliterating any lettering.

7.1.8.1.2 If screws are used, they shall not penetrate more than one-half of the tank plate thickness.

7.1.8.2 Nameplate. A metal nameplate, with raised or stamped letters and numbers that are large enough to be easily read, that bears the following information shall be provided:

(1) Name and location of manufacturer
(2) Year of assembly
(3) Length and diameter
(4) Total capacity [gal (m^3)]
(5) Working pressure [lb/$in.^2$ (bar)]

7.1.8.3 Water-Level Indicator.

7.1.8.3.1 The nameplate shall also serve as the water-level indicator by bearing an easily observed raised arrow.

7.1.8.3.2 The tank plate shall be marked "⅔ capacity line" in raised or stamped lettering behind the gauge glass and shall be located in such a position that the arrow is at the water level when the tank is two-thirds full. For horizontal tanks, the two-thirds capacity line is 63¾00 of the diameter above the bottom of the tank.

7.1.8.3.3 Where the design water level is at a point other than the ⅔ level, the nameplate shall be so lettered and positioned behind the gauge glass accordingly.

7.1.9 Housing.

7.1.9.1 Where subject to freezing, the tank shall be located in a substantial noncombustible housing.

7.1.9.2 The tank room shall be large enough to provide free access to all connections, fittings, and manholes, with at least 18 in. (457 mm) around the rest of the tank.

7.1.9.3 The distance between the floor and any part of the tank shall be at least 3 ft (0.91 m).

7.1.9.4 The floor of the tank room shall be watertight and shall be arranged to drain outside the enclosure.

7.1.9.5 The tank room shall be adequately heated to maintain a minimum temperature of 40°F (4.4°C) and shall be equipped with ample lighting facilities.

7.1.10 Buried Tanks. Where necessary due to lack of space or other conditions, pressure tanks shall be permitted to be buried, provided the requirements of 7.1.10.1 through 7.1.10.7 are satisfied.

7.1.10.1 The tank shall be located below the frost line to protect against freezing.

7.1.10.2 The end of the tank, and at least 457 mm (18 in.) of its shell, shall project into the building basement or into a pit in the ground provided with protection against freezing.

Copyright National Fire Protection Association
Provided by IHS under license with NFPA
No reproduction or networking permitted without license from IHS
Not for Resale

7.1.10.3* There shall be adequate space for inspection, maintenance, and use of the tank manhole for interior inspection.

7.1.10.4 The exterior surface of the tank shall be cleaned and painted in accordance with 7.1.7.3, and additional protection shall be provided as required by 7.1.10.4.1 and 7.1.10.4.2.

7.1.10.4.1 An approved cathodic system of corrosion protection shall be provided.

7.1.10.4.2 At least 12 in. (305 mm) of sand shall be backfilled around the tank.

7.1.10.5 The tank shall be located above the maximum ground water level so that the buoyancy of the tank, when empty, does not force it upward. The tank shall be permitted to be anchored to a concrete base as an alternative.

7.1.10.6 The tank shall be designed with strength to resist the pressure of earth to which it is subjected.

7.1.10.7 A manhole shall be located on the vertical centerline of the tank end as close as possible to the knuckle but remaining clear of it.

7.2 Pipe Connections and Fittings.

7.2.1 Openings.

7.2.1.1 A manhole and all openings needed for the connection of the piping and fittings specified in 7.2.1.2 and 7.2.1.3 shall be provided.

7.2.1.2 The manhole and threaded openings shall conform in design to the ASME *Boiler and Pressure Vessel Code*, "Rules for the Construction of Unfired Pressure Vessels."

7.2.1.3 The manhole shall be placed below the water level.

7.2.2 Tank Discharge.

7.2.2.1 The discharge pipe shall be sized to supply the required amount of water for the fire protection system, but shall not be less than 4 in. (102 mm) in size in any case.

7.2.2.2 The discharge pipe shall be connected to the bottom of the tank by means of a fitting that projects 2 in. (51 mm) above the bottom to form a settling basin and to prevent sediment from passing into the system.

7.2.2.3 A listed horizontal swing-check valve and a listed indicating valve shall be located in the discharge pipe, directly under or near the tank.

7.2.2.4 The pipe shall be adequately supported.

7.2.3 Filling Pipe.

7.2.3.1 The water-filling pipe shall be at least 1½ in. (38 mm) in size, shall be run separately from the filling pump or other acceptable source of supply, and shall be adequately supported and protected from mechanical injury.

7.2.3.2* The filling pipe shall be connected to the top or bottom of the tank as required by the authority having jurisdiction.

7.2.3.3 A listed horizontal bronze-seat swing-check valve and a renewable-disc globe valve shall be provided in the pipe near the tank.

7.2.3.4 The globe valve shall be placed between the check valve and the tank.

7.2.4 Air Pipe.

7.2.4.1 The air supply pipe shall be at least 1 in. (25.4 mm) in size, well supported, and protected from breakage.

7.2.4.2 The air supply pipe shall be connected to the tank above the water level.

7.2.4.3 A reliable horizontal bronze-seat swing-check valve and listed renewable-disc globe valve shall be provided in the pipe near the tank.

7.2.4.4 The globe valve shall be placed between the tank and the check valve.

7.2.5 Water-Level Gauge.

7.2.5.1 A ¾ in. (19.1 mm) water-level gauge with a listed valve at each end shall be provided with the center of the glass tube at the normal water level.

7.2.5.2 The gauge glass shall be not over 12 in. (305 mm) long for horizontal tanks or 18 in. (457 mm) long for vertical tanks.

7.2.5.3 Listed angle globe valves with renewable discs shall be installed in the connections from the gauge to the tank and shall be independent of the shutoff valves that are a part of the gauge fittings.

7.2.5.4 The water-level gauge shall be connected through valves into the tank.

7.2.5.5 A petcock shall be provided for draining the glass.

7.2.5.6 All fittings and nipples shall be of brass, not less than ¾ in. (19.1 mm) in size.

7.2.5.6.1 The nipple that extends into the tank shall be permitted to be ½ in. (12.7 mm) in size.

7.2.5.7 The glass gauge tube shall be protected from mechanical injury by a guard that consists of at least three 3⁄16 in. (4.8 mm) brass rods.

7.2.5.8 The valves on the water-level gauge connections shall be opened only when ascertaining the amount of water in the tank.

7.2.6 Air-Pressure Gauge.

7.2.6.1 A listed 4½ in. (114 mm) dial, double-spring gauge shall be connected into the air chamber between the tank and any valve, generally to the line between the upper end of the water-level gauge and the tank.

7.2.6.2 The pressure gauge shall have a maximum range equivalent to twice the normal working pressure when installed and shall be controlled by a valve that is arranged to drain.

7.2.6.3 A plugged outlet at least ¼ in. (6.4 mm) in size shall be provided between the valve and the gauge for the inspector's gauge.

7.2.7 Safety Appliances.

7.2.7.1 A brass relief valve not less than ¾ in. (19.1 mm) in size that is set to operate at a pressure that is 10 percent in excess of the normal tank pressure shall be placed in the air supply pipe between the check valve and the air compressor.

7.2.7.2 There also shall be a brass relief valve not less than 1½ in. (38.1 mm) in size at the filling pump that is set to

Copyright National Fire Protection Association
Provided by IHS under license with NFPA
No reproduction or networking permitted without license from IHS
Not for Resale

relieve pressures that are 10 percent in excess of the pressure at the pump when the tank is under normal working pressure.

7.2.7.3 No safety appliances shall be installed between the tank and other valves.

7.2.8 Emergency Drain.

7.2.8.1 Provisions shall be made to drain each tank independently of all other tanks and the sprinkler system by means of a pipe that is not less than 1½ in. (nominal 40 mm) in diameter.

7.2.8.1.1 The drain valve shall be a globe valve with a renewable disc and shall be located near the tank.

7.2.8.2 Use of drains other than those shown in Figure B.1(a) and Figure B.1(b) below the pressure tank, after shutting off other water supplies, shall not be permitted under any condition, as collapse of the pressure tank can result.

7.2.9 Water Filling Supply.

7.2.9.1 The filling supply or pump shall be reliable and shall be capable of replenishing the water that is required to be maintained in the tank with the required air pressure restored in not more than 4 hours.

7.2.9.2 A relief valve shall be provided at the pump, as specified in 7.2.7.

7.2.10 Air Compressor.

7.2.10.1 An air compressor capable of delivering not less than 16 ft^3/min (0.45 m^3/min) of free air for tanks of 7500 gal (28.39 m^3) total capacity, and not less than 20 ft^3/min (0.57 m^3/min) for larger sizes, shall be provided.

7.2.10.2 The compressor shall be located in the tank house.

7.2.10.2.1 The compressor shall be permitted to be located elsewhere if permitted by the authority having jurisdiction.

7.2.10.3 A safety valve shall be provided, as specified in 7.2.7.

7.2.11 Arrangement. All pipe connections and valves, including the manhole, the emergency drain valve, and all valves on the discharge pipe, shall be arranged for convenient manipulation.

7.2.12* Watertight Intersections at Roofs and Floors. The intersections of all piping with the building roof and concrete or waterproof floors shall be watertight.

7.2.13 Fire Protection. The tank shall be protected by automatic sprinklers if combustible contents or construction could heat the tank in the event of a fire.

Chapter 8 Wood Gravity Tanks and Suction Tanks

8.1 General.

8.1.1 This chapter shall apply to the design, fabrication, and erection of wood gravity water tanks, including pump suction tanks.

8.1.2 Capacity.

8.1.2.1 The capacity of the tank shall be the number of U.S. gallons (cubic meters) available above the outlet opening.

8.1.2.2 The net capacity between the outlet opening of the discharge pipe and the inlet of the overflow shall be at least equal to the rated capacity.

8.1.3* Standard Sizes. The standard net capacity sizes of wood tanks shall be as follows:

(1) 5000 gal (18.93 m^3)
(2) 10,000 gal (37.85 m^3)
(3) 15,000 gal (56.78 m^3)
(4) 20,000 gal (75.70 m^3)
(5) 25,000 gal (94.63 m^3)
(6) 30,000 gal (113.55 m^3)
(7) 40,000 gal (151.40 m^3)
(8) 50,000 gal (189.25 m^3)
(9) 60,000 gal (227.10 m^3)
(10) 75,000 gal (283.88 m^3)
(11) 100,000 gal (378.50 m^3)

8.1.4 Strength.

8.1.4.1 The materials as specified shall have no defects other than those that are permitted by the grading rules for the lumber specified in 8.2.2.

8.1.4.2 The use of second-hand materials, including such materials as hoops and lumber, shall not be permitted.

8.1.4.3 The workmanship shall be of such quality that defects or injuries are not produced during manufacture or erection.

8.1.4.4* Unit stresses, as specified in Section 8.4, shall not be exceeded except where additionally reinforced.

8.1.4.5 The structure and its details shall possess the requisite strength and rigidity.

8.2 Material.

8.2.1 Lumber — General. All lumber shall be well-seasoned and free from rot, sap, loose or unsound knots, worm holes, and shakes in accordance with National Wood Tank Institute Bulletin S82.

8.2.2 Lumber — Staves and Bottom.

8.2.2.1 Untreated lumber in the staves and bottom shall be thoroughly air-dried (below 17 percent moisture content) "all heart" or "tank stock" without any sapwood after shaping.

8.2.2.2* Acceptable untreated species, in order of preference, shall be redwood, western yellow cedar, southern white cedar (dismal swamp), western red cedar, and Douglas fir (coast type).

8.2.2.3 Treatment.

8.2.2.3.1 Acceptable treated species shall include all those specified in 8.2.2.1 and yellow pine, all without sapwood restriction.

8.2.2.3.2 Treatment shall consist of a 6 lb/ft^3 to 8 lb/ft^3 (96 kg/m^3 to 128 kg/m^3) retention of creosote or pentachlorophenol that is applied by means of the empty-cell process after shop fabrication, in accordance with the American Wood Preservers Association.

8.2.3 Timber Supports. Wooden dunnage beams, where used, shall be a dense grade of southern pine or Douglas fir or shall be a construction heart-untreated redwood or red cypress (coast type).

8.2.3.1 Structural grades of other species shall be permitted to be used, provided they are treated with 6 lb/ft^3 to 8 lb/ft^3 (96 kg/m^3 to 128 kg/m^3) retention of creosote or pentachlorophenol that is applied by means of the empty-cell process in

Copyright National Fire Protection Association
Provided by IHS under license with NFPA
No reproduction or networking permitted without license from IHS
Not for Resale

accordance with the standard specifications of the American Wood Preservers Association. *(See 8.4.1 and 8.5.8.)*

8.2.3.2 Wood dunnage beams shall be at least 4 in. × 6 in. (102 mm × 152 mm) nominal size.

8.2.4 Hoops.

8.2.4.1 Hoops shall be round bars of steel.

8.2.4.2 The steel bars shall conform to ASTM A 36, ASTM A 502, or ASTM A 675.

8.2.4.3 Steel shall be made only by the open-hearth or electric-furnace processes.

8.2.5 Hoop Lugs. The lugs shall be malleable iron, cast steel, or fabricated steel and shall have equal or greater ultimate strength than the steel hoop with which they are used that is in accordance with ASTM A 36, ASTM A 502, or ASTM A 675.

8.2.6 Steel Shapes. The steel for structural shapes shall conform to ASTM A 36.

8.3 Loads.

8.3.1 Dead Load. The dead load shall be the estimated weight of all permanent construction and fittings.

8.3.2 Live Load.

8.3.2.1 Under normal conditions, the live load shall be the weight of all the liquid when it overflows the top of the tank.

8.3.2.2 The unit weight of water shall be considered to be 62.4 lb/ft^3 (1000 kg/m^3).

8.3.2.3 Proper provision shall be made for temporary stresses during erection.

8.3.2.4 Where roofs have a slope of less than 30 degrees, they shall be designed to support a uniform weight of 25 lb/ft^2 (122 kg/m^2) on the horizontal projection.

8.3.3 Wind Load.

8.3.3.1 Under normal conditions, the wind load or pressures shall be assumed to be 30 lb/ft^2 (147 kg/m^2) on vertical plane surfaces, 18 lb/ft^2 (88 kg/m^2) on projected areas of cylindrical surfaces, and 15 lb/ft^2 (73 kg/m^2) on projected areas of conical and double-curved plate surfaces.

8.3.3.2 When designing for wind velocities over 100 mph (161 km/hr), all of these specified unit pressures shall be adjusted in proportion to the square of the velocity, assuming that the pressures are for velocities of 100 mph (161 km/hr).

8.3.4 Earthquake Load. Tank structures shall meet local requirements for resisting earthquake damage.

8.3.5 Balcony and Ladder Loads.

8.3.5.1 A vertical load of 1000 lb (454 kg) shall be assumed to be applied to any 10 ft^2 (0.93 m^2) of area on the balcony floor and on each platform; 500 lb (227 kg) shall be assumed to be applied to any 10 ft^2 (0.93 m^2) of area on the tank roof; and 350 lb (159 kg) shall be assumed to be applied on each vertical section of ladder.

8.3.5.2 All structural parts and connections shall be designed to withstand such loads.

8.3.5.3 The loads specified shall not be combined with snow loading.

8.4 Unit Stresses.

8.4.1* General. The following stresses in pounds per square inch (megapascals) shall apply particularly to wood tanks and shall not be exceeded.

8.4.1.1 Tension Hoops.

8.4.1.1.1 The unit stress for tension hoops made of steel in accordance with ASTM A 675 shall be 15,000 lb/in.^{2} (103.43 MPa) (use with hydrostatic load and neglect initial tension).

8.4.1.1.2 Steel in accordance with ASTM A 36 or ASTM A 502 shall have a unit stress of 20,000 lb/in.^{2} (137.90 MPa).

8.4.1.2 Timber. The allowable working stresses for timbers referenced in 8.2.3 and 8.5.8 shall be as specified in Table 8.4.1.2.

8.4.2 Wind and Earthquake Allowance.

8.4.2.1 For stresses that are due to the combination of wind or earthquake with other loads, the working unit stresses specified in 8.4.1 through 8.4.1.2 shall be permitted to be increased by 33⅓ percent.

8.4.2.2 Wind and earthquake loads shall not be required to be considered simultaneously.

8.4.2.3 In no case shall the strength of the member be less than that required for dead and live loads alone.

8.5 Details of Design.

8.5.1 Lumber Thickness. The lumber in the staves and in the bottom shall be at least 2½ in. (64 mm) (nominal), dressed to not less than 2⅛ in. (54 mm) thickness for tanks less than 20 ft (6.1 m) in depth or diameter; for larger tanks, the lumber shall be at least 3 in. (76 mm) (nominal), dressed to not less than 2⅜ in. (60 mm) thickness.

8.5.2 Hoop Sizes. Hoops shall not be smaller than the pitch diameter of ¾ in. (19.1 mm) thread. No more than two sizes of hoops shall be used on a tank.

8.5.3* Hoop Schedules.

8.5.3.1 A hoop shall be assumed to support one-half the length of the stave to the two adjacent hoops.

8.5.3.2* Other schedules shall be acceptable, provided the unit stresses specified in Section 8.4 are not exceeded.

8.5.4 Hoops at Bottom.

8.5.4.1 One hoop shall be placed at approximately the center of the bottom planks of tanks with diameters of 19 ft (5.8 m) or less.

8.5.4.1.1 The stress in this hoop shall not exceed one-half the allowable unit tension, with the excess strength provided to accommodate the swelling of the bottom planks.

8.5.4.2 On tanks with diameters of over 19 ft (5.8 m), two hoops of equal size shall be placed opposite the tank bottom.

8.5.4.2.1 The stress in the upper hoop shall be limited as specified in 8.5.4.1.1.

8.5.5 Hoops at Top. The top hoops shall be placed 3 in. (76 mm) below the bottom of the flat cover joists or 3 in. (76 mm) below the top of the staves if the flat cover is omitted.

8.5.5.1 The maximum spacing of hoops shall not exceed 21 in. (533 mm).

Copyright National Fire Protection Association
Provided by IHS under license with NFPA
No reproduction or networking permitted without license from IHS
Not for Resale

Table 8.4.1.2 Working Stresses for Timber (Select Grade)

	Allowable Stress							
	Bending							
	In Extreme Fiber		Horizontal Shear		Compression Perpendicular to Grain		Compression Parallel to Grain; Short Columns	
Species	MPa	psi	MPa	psi	MPa	psi	MPa	psi
Cedar, western red	6.21	900	0.55	80	1.38	200	4.83	700
Cedar, northern and southern white	5.17	750	0.48	70	1.21	175	3.79	550
Douglas fir (western Washington and Oregon)	11.03	1600	0.62	90	2.38	345	8.10	1175
Douglas fir (western Washington and Oregon), dense grade	12.07	1750	0.72	105	2.62	380	8.89	1290
Douglas fir (Rocky Mountain type)	7.58	1100	0.57	85	1.90	275	5.52	800
Pine, southern yellow	11.03	1600	0.76	110	2.38	345	8.10	1175
Pine, southern yellow, dense	12.07	1750	0.83	120	2.62	380	8.89	1290
Pine, white, sugar, western white, western yellow	6.21	900	0.57	85	1.72	250	5.17	750
Pine, Norway	7.58	1100	0.57	85	2.07	300	5.52	800
Redwood	8.27	1200	0.48	70	1.72	250	6.90	1000
Spruce, red, white, Sitka	7.58	1100	0.57	85	1.72	250	5.52	800

8.5.6 Hoop Lugs.

8.5.6.1 The ends of the hoop sections shall be connected by malleable iron, cast steel, or fabricated steel lugs and shall have equal or greater ultimate strength than the steel hoop with which they are used that is in accordance with ASTM A 36 or ASTM A 502.

8.5.6.2 The lugs shall be so designed that water cannot be pocketed.

8.5.6.3 The hoops shall be so located on the tank that the lugs form fairly uniform spiral lines.

8.5.7 Main Supports. Steel I-beams or reinforced concrete beams shall be used for the main supports where the dunnage beams rest.

8.5.8 Spacing of Supports.

8.5.8.1 The maximum distance in the clear between the beams where the tank bottom rests shall not exceed 21 in. (533 mm).

8.5.8.2 The maximum distance between the outer edge of the outer dunnage beam and the inside surface of the tank staves, measured on a line perpendicular to the beam at its midpoint, shall not exceed 14 in. (356 mm).

8.5.9 Air Circulation Under Tank Bottom. Tank supports shall be designed to allow the free circulation of air under the tank bottom and around the ends of the staves.

8.6 Workmanship.

8.6.1* Lumber Edges and Surfaces. Planks for the staves and bottom shall be planed on both sides.

8.6.1.1 The edges of the staves and bottom planks shall be machine-planed or sawed.

8.6.1.2 The edges of staves shall be cut to obtain full bearing at the joints.

8.6.1.3 The last stave to be placed in the tank shall be carefully planed to the required size.

8.6.2 Croze.

8.6.2.1 The croze shall be cut at right angles to the centerline of the staves.

8.6.2.2 The edges of the bottom planks shall be beveled on the underside and smoothed off on the upper side by planing to obtain a tight joint at the croze.

8.6.2.3 The depth and width of the croze shall be at least ¾ in. (19.1 mm) and 2⅛ in. (54 mm), respectively, for 3 in. (76 mm) nominal staves, and ⅝ in. (15.9 mm) and 2 in. (51 mm), respectively, for 2½ in. (64 mm) nominal staves.

8.6.3 Chime.

8.6.3.1 The chime shall be of uniform depth and shall be not less than 3 in. (76 mm).

Copyright National Fire Protection Association
Provided by IHS under license with NFPA
No reproduction or networking permitted without license from IHS
Not for Resale

8.6.3.2 Before erection, the chimes of staves shall be fastened with at least two nails or staples at least 1¼ in. (32 mm) long.

8.6.3.3 Nails or staples shall be coated with zinc or copper, or they shall be of other material that is highly resistant to corrosion.

8.6.4 Dowels. The edges of each bottom plank shall be bored with holes not over 5 ft (1.5 m) apart for wooden dowels not less than ½ in. (12.7 mm) in diameter for planks up to 2½ in. (64 mm) nominal, and ⅝ in. (15.9 mm) in diameter above that thickness.

8.6.5 Splices.

8.6.5.1 Finger joint splices shall be used in a stave or in a bottom plank where permitted by the authority having jurisdiction.

8.6.5.2 Such joints in adjacent staves or bottom planks shall be staggered a minimum of 2 ft (0.61 m).

8.6.6 Joints at Bottom. The joints between staves shall not be closer than ½ in. (12.7 mm) to a joint between the bottom planks.

8.6.7 Extra Staves. One or more extra staves shall be shipped with each tank.

8.6.8 Marking of Staves. The proper hoop spacing shall be plainly marked on at least six staves before shipment.

8.6.9 Clearance at Supports.

8.6.9.1 The distance between the ends of dunnage beams and the inside surface of the staves shall be not less than 1 in. (25.4 mm) or more than 3 in. (76 mm).

8.6.9.2 The supports shall be of such depth that the clearance beneath the ends of staves is not less than 1 in. (25.4 mm) at any point.

8.6.10 Hoop Forming. Hoops shall be cut to the proper length and shall be bent in the shop to the radius of the tank.

8.6.11 Hoop Threads. The nut threads shall fit tightly and shall be U.S. Standard.

8.6.12 Hoop Tightening. Care shall be taken when setting up the nuts on the hoops to prevent an excessive initial stress in the hoops. The threads of the nuts shall be fully engaged.

8.6.13 Removal of Rubbish. All waste lumber and rubbish shall be removed from the inside of the tank and from the flat cover, if provided, before filling to prevent possible obstruction of piping.

8.7 Accessories.

8.7.1 Roof — General.

8.7.1.1 Where the tank is located outdoors, it shall have a flat wooden cover over the top and a conical roof above the wooden cover.

8.7.1.1.1 The flat cover shall not be required, and the conical cover shall be made self-supporting, provided the approval of the detailed design is first obtained from the authority having jurisdiction.

8.7.1.2 Roofs shall be constructed as shown in Figure B.1(c) and Figure B.1(d), or shall be in accordance with other designs approved by the authority having jurisdiction.

8.7.1.3 Roof boards shall be of not less than 1 in. (25.4 mm) nominal thickness or ⅜ in. (9.5 mm) exterior grade plywood that is laid without spacing between.

8.7.1.4 If plywood is used, the end joints shall be made over roof joists, or ply clips shall be used to support the edges.

8.7.1.5 Shiplap or matched joints shall be used on boards in the flat cover, unless plywood is used.

8.7.1.6 The joint between the tank staves and roof shall be tight.

8.7.1.7 Nails or staples shall be heavily galvanized or shall be of nonferrous metals.

8.7.2 Flat Cover.

8.7.2.1 The flat cover, if provided, shall rest on parallel joists and shall be spaced not over 36 in. (914 mm) on centers.

8.7.2.2 The nominal size of the joists shall be at least 2 in. × 6 in. (51 mm × 152 mm) for lengths up to 18 ft (5.5 m); 3 in. × 6 in. (76 mm × 152 mm) for lengths up to 22 ft (6.7 m); and 3 in. × 8 in (76 mm × 203 mm) for lengths up to 30 ft (9.2 m).

8.7.2.3 The full section of all joists at their ends shall be solidly supported by resting in slots that are cut entirely through the staves or by other means that are approved by the authority having jurisdiction.

8.7.3* Conical Roof.

8.7.3.1 The conical roof shall be supported by 2 in. × 4 in. (51 mm × 102 mm) rafters spaced not over 36 in. (914 mm) apart around the top of the tank.

8.7.3.2 Although the rafter and header type of construction is considered preferable, other types of roof construction shall be acceptable, provided approval of the design is first obtained from the authority having jurisdiction.

8.7.3.3 The roof shall be covered with galvanized iron, at least 60 lb (27 kg) asphalt, asbestos, or equivalent fire-resistive roofing and shall be securely fastened in place.

8.7.3.3.1 Prepared asphalt roofing shall be laid with at least 2½ in. (64 mm) laps, be properly cemented, and use ¾ in. (19.1 mm) galvanized roofing nails with at least ½ in. (12.7 mm) heads and large washers spaced not over 3 in. (76 mm) on centers, or 0.050 in. (1.27 mm) nonferrous staples ½ in. (12.7 mm) in length for 65 lb (30 kg) covering and ¾ in. (19.1 mm) for 90 lb (41 kg) covering.

8.7.4 Roof Anchorage. All parts of the roof and cover shall be securely fastened together and shall be anchored to the tank staves to prevent extreme winds from blowing them loose.

8.7.5 Roof Hatches.

8.7.5.1 A hatch not less than 20 in. × 22 in. (508 mm × 559 mm) shall be built in the conical roof and shall be accessible from the tank ladder.

8.7.5.1.1 The hatch shall be placed high enough on the conical roof that entrance to the flat roof is reasonably easy when the cover for the flat roof hatch is in place.

8.7.5.2 The four sides of the hatch shall be of not less than 1½ in. (38.1 mm) dressed stock and shall be raised not less than 3 in. (76 mm) above the roof boards.

8.7.5.2.1 The top of the hatch cover shall be made of not less than 25.4 mm (1 in.) dressed and matched boards or ⅜ in.

Copyright National Fire Protection Association
Provided by IHS under license with NFPA
No reproduction or networking permitted without license from IHS
Not for Resale

(9.5 mm) exterior grade plywood, and shall be covered with the same material as specified for the roof.

8.7.5.2.2 The edges of the hatch cover shall be of not less than 1½ in. (38.1 mm) dressed stock and shall lap down over the raised sides of the hatch.

8.7.5.2.3 The hatch cover shall be arranged to open freely by sliding upward on two ½ in. (12.7 mm) guide rods that are securely bolted to the roof, one on each side of the cover.

8.7.5.2.4 A substantial handle shall be bolted to the lower side of the cover.

8.7.5.3 Other forms of hatch covers shall be acceptable, provided approval is first obtained from the authority having jurisdiction.

8.7.5.4 A hatch of not less than 20 in. × 22 in. (508 mm × 559 mm) shall be built in the flat cover, if provided, and shall be located directly beneath the hatch in the conical roof.

8.7.5.4.1 The hatch cover shall be made of 1 in. (25.4 mm) dressed and matched boards or ⅜ in. (9.5 mm) exterior grade plywood, and shall be of sufficient size to prevent it from falling through the hatch.

8.7.6 Ladders — General.

8.7.6.1 Inside and outside ladders that are arranged for convenient passages from one to the other and through the roof hatch shall be provided.

8.7.6.2 Ladders shall not interfere with the opening of the hatch cover.

8.7.6.3 All ladders exceeding 20 ft (6.1 m) in length shall be equipped with a cage, a rigid notched rail, or other listed ladder safety device.

8.7.7 Outside Ladders.

8.7.7.1 A steel ladder that extends from the balcony to the roof shall be provided on the outside of the tank.

8.7.7.1.1 The sides of the ladder shall extend 18 in. (457 mm) above the top of the tank and downward in an arch to the roof or cover where the ends shall be securely fastened.

8.7.7.1.2 The ladder shall be placed at least 3 ft (0.91 m) to one side of the tower ladder if a balcony is provided. *(See 8.7.9.)*

8.7.7.2 The outside ladder shall have flat side bars of not less than 2 in. × ½ in. (51 mm × 12.7 mm) or 2½ in. × ⅜ in. (64 mm × 9.5 mm), spaced at least 16 in. (406 mm) apart, and shall have at least ¾ in. (19.1 mm) round or square rungs, spaced 12 in. (305 mm) on centers.

8.7.7.2.1 The rungs shall be firmly welded to the side bars. The ladder shall be securely fastened by brackets at a location that is at least 7 in. (178 mm) between the side of the tank and the centerline of the rungs.

8.7.7.2.2 The upper brackets shall be placed not more than 12 in. (305 mm) below the top of the tank staves, and the lower end of the ladder shall be securely fastened to the balcony *(see 8.7.9)*; in the absence of a balcony, the lower end of the ladder shall be fastened to the tower ladder.

8.7.7.2.3 The brackets shall be designed to support a load of 350 lb (159 kg) on the ladder and shall be securely fastened to the tank with through bolts not less than ⅜ in. (9.5 mm) in diameter.

8.7.8 Inside Ladder.

8.7.8.1 A wooden ladder that is made of the same type of wood as the tank shall be provided on the inside of the tank and shall extend from the hatch to the tank bottom with a slope of approximately 10 degrees from the vertical.

8.7.8.2 Inside ladders of up to 16 ft (4.9 m) in height shall have 2 in. × 4 in. (51 mm × 102 mm) side pieces.

8.7.8.2.1 Ladders over 16 ft (4.9 m) shall have 2 in. × 6 in. (51 mm × 152 mm) side pieces.

8.7.8.2.2 All side pieces shall be spaced at least 16 in. (406 mm) apart. Rungs shall be 1¼ in. × 3 in. (32 mm × 76 mm) and spaced 12 in. (305 mm) on centers.

8.7.8.2.3 Rungs shall be securely spiked with noncorrosive nails into slots of not less than ¾ in. (19.1 mm) and shall be not more than 1 in. (25.4 mm) in depth.

8.7.8.2.4 The ladder shall be securely fastened at the upper and lower ends with noncorrosive nails.

8.7.9 Balcony — General.

8.7.9.1 A wooden or steel balcony shall be placed around the base of the tank where the tank bottom is elevated more than 25 ft (7.6 m) above the main building roof.

8.7.9.2 For tanks with a diameter in excess of 15 ft 6 in. (4.7 m), the width of the balcony shall be 24 in. (607 mm) and, for smaller tanks, the width shall be not less than 18 in. (457 mm).

8.7.10 Balcony Floor.

8.7.10.1 Where the balcony is made of wood, the planks shall be at least 2 in. (51 mm) nominal dressed lumber of good quality and shall be spaced ½ in. (12.7 mm) apart.

8.7.10.2 The planks shall be laid crosswise on stringers, or lengthwise on crossbeams, and spaced not over 4 ft (1.2 m) apart.

8.7.10.3 Where the balcony is made of steel, it shall be built of at least ¼ in. (6.4 mm) plate and shall be provided with drain holes.

8.7.11 Balcony Clearance.

8.7.11.1 A clearance of not less than 3 in. (76 mm) nor more than 5 in. (127 mm) at any point shall be provided between the balcony and the tank staves.

8.7.11.2 The clearance in the inside angles of polygonal balconies with plank laid lengthwise shall be limited to a maximum of 5 in. (127 mm) by means of properly supported filler pieces.

8.7.12 Balcony Supports. The balcony supports shall be built of structural steel shapes.

8.7.12.1 Reinforced concrete supports shall be permitted to be used where the tank is located on a concrete tower.

8.7.13 Balcony Railing.

8.7.13.1 A railing of 42 in. (1067 mm) in height shall be placed around the balcony and shall be rigid.

8.7.13.2 The top rail and posts shall be made of not less than 1½ in. pipe or of angle iron not lighter than 2 in. × 2 in. × ⅜ in. (51 mm × 51 mm × 9.5 mm).

Copyright National Fire Protection Association
Provided by IHS under license with NFPA
No reproduction or networking permitted without license from IHS
Not for Resale

8.7.13.3 An intermediate rail shall be provided.

8.7.13.4 The maximum spacing of rail posts shall be 8 ft (2.4 m).

8.7.13.5 The railing shall be designed to withstand a 200 lb (91 kg) load in any direction at any point on the top rail.

8.7.13.6 A toe board shall be provided where needed.

8.7.14 Balcony Opening. Where a hole is cut in the balcony for the tower ladder, it shall be at least 18 in. × 24 in. (457 mm × 607 mm).

8.7.15 Painting Inaccessible Parts. Portions of steelwork that are inaccessible after erection shall be painted before assembly.

8.7.16 Painting. All exterior surfaces shall be cleaned by commercial blasting in accordance with SSPC SP 6, or pickling in accordance with SSPC SP 8, and shall be primed with one coat of lead-free alkyd in accordance with the requirements for "Outside Paint System No. 1" of AWWA D102.

8.7.17 Field Painting — Steelwork.

8.7.17.1 After erection, a patch coat of the same kind of paint as the original coat shall be applied to all steel surfaces where the paint has worn off and shall also be applied to the thoroughly cleaned hoop threads.

8.7.17.2 Two overall field coats of aluminum or alkyd enamel in a color specified by the purchaser shall be used in accordance with the requirements for "Outside Paint System No. 1" of AWWA D102. *(See 5.7.9.6.)*

8.7.17.3 Other finish coats shall be permitted to be used, provided they are compatible with the primer and provided permission is obtained from the authority having jurisdiction.

8.7.18 Painting Application. Paint shall be applied in accordance with 5.7.11.

8.7.19 Preservatives — Woodwork. Exposed wood such as balconies, stringers, and supporting beams shall be provided with at least two coats of a good grade preservative sealer.

8.7.20 Lightning Protection. Lightning protection shall be in accordance with Section 4.8.

Chapter 9 Embankment-Supported Coated Fabric Suction Tanks

9.1 General. This section shall apply to the materials, embankment preparation, and installation of embankment-supported coated fabric suction tanks as shown in Table 9.1.

9.2 Standard Capacities. The standard capacities shall be in increments of 100,000 gal to 1,000,000 gal (378.5 m^3 to 3785 m^3).

9.3 Materials.

9.3.1 Construction. The material shall be of a nylon fabric and shall be coated with an elastomer that is compounded to provide abrasion and weather resistance.

9.3.2 Design. The tank shall be designed in accordance with 9.3.2.1 through 9.3.2.3.

9.3.2.1 The tank shall be designed to provide an assembly, with seams, that has a strength equal to or greater than the strength of the basic tank construction.

9.3.2.2 The top surface of the tank shall be coated with a weather-resistant elastomeric paint as recommended by the tank manufacturer.

9.3.2.3 The tank shall be designed to accommodate the field attachment of inlet/outlet fittings during installation.

9.4 Embankment Preparation and Tank Installation Procedure.

9.4.1 Foundation. The embankment and earth base that support the tank shall be installed in accordance with Figure B.1(e).

9.4.1.1 The embankment shall be designed for stability and drainage.

9.4.1.1.1 Where two tanks are installed with a single embankment between tanks, such an embankment shall be designed to resist the load of a full single tank when one tank is drained.

9.4.1.2 A shallow excavation shall be permitted to be made below nominal grade level where allowed by local soil and groundwater conditions permit.

9.4.1.2.1 The removed soil, if suitable, shall be permitted to be used to extend the embankment above grade for the required height (cut and fill method).

9.4.1.3 The internal and external slopes of the embankment shall be 1½ to 1.

9.4.1.3.1 The slope shall be maintained in the original design condition to ensure the integrity of the embankment.

9.4.1.3.2 The soil shall provide a stable embankment.

9.4.1.3.3 Compliance with these requirements shall be subject to verification by a qualified professional soils engineer.

9.4.1.4 The inside corners of the embankment at the intersections of dike walls shall be rounded using a radius of ±1 ft (±0.31 m), approximately, at the bottom and a radius of ±2½ ft (±0.76 m), approximately, at the top of the dike, with uniform gradation from the bottom to the top, as approved by an authorized design or soils engineer.

9.4.1.5 The floor of the embankment shall be graded to locate the inlet/outlet fitting at a minimum distance of 3 in. (76 mm) below the toe of the embankment inside juncture with the floor.

9.4.1.5.1 The grading between the fitting location and all points along the juncture of the sloping side walls and the floor shall be uniform to provide positive drainage.

9.4.1.6 Earth dike construction tolerances shall be as follows:

(1) ±6 in (152 mm) ± for surface variance on the interior slope of the dike walls
(2) +2 percent on a specified vertical dimension for the dike height
(3) ±1 percent on horizontal dimensions specified for the dike length and width where approved by the soils engineer

9.4.1.7 A 6 in. (152 mm) thick layer of fine sand or top soil shall be used for the surface layer of the floor and shall be underlaid by a 3 in. (76 mm) thickness of selected pea gravel to provide a firm, smooth bed and good drainage.

Copyright National Fire Protection Association
Provided by IHS under license with NFPA
No reproduction or networking permitted without license from IHS
Not for Resale

Table 9.1 Physical Properties of Finished Embankment Tank Assembly

		Federal Standard 191 Method	ASTM Method	
Weight		5041	ASTM D 751	40.5 oz/yd ±2 oz/yd (0.06 kg/0.84 m^2)
Thickness		5030	ASTM D 751	0.042 in. ±0.003 in. (1.07 mm ±0.08 mm)
Breaking strength	Warp Fill	5100 5100	ASTM D 751 Grab	300 lb (136.2 kg) average 300 lb (136.2 kg) average
Tear strength	Warp Fill	5134 5134	ASTM D 2261 Tongue	20 lb (9.1 kg) average 20 lb (9.1 kg) average
Adhesion of coating to fabric: jaw separation speed 12 in. (305 mm)/min		5970	ASTM D 751	15 lb/in. (6.8 kg/mm) width, minimum
Puncture resistance — per MIL-T-6396C, 4.6.17				
Parallel to warp				90 lb (40.8 kg) minimum
Parallel to fill				90 lb (40.8 kg) minimum
45 degrees to cords				90 lb (40.8 kg) minimum
Abrasion resistance Wheel— H-22 Weight— 3.5 oz (100 g/wheel)		5306	ASTM D 1183 Taber	No fabric showing after 4000 cycles
Blocking resistance		5872		Rating of 1— maximum
Seam strength, 2 in. (51 mm) wide specimen		8311*		No seam slippage
Low temperature				No cracking at −20°F (−29°C)
Flexibility MIL-C-8068A (ASG), 4.4.4.2				

* Federal Test Method Standard 601.

9.4.1.8 The finished surfaces of the inside dike walls and the floor shall be free from sharp rocks and debris.

9.4.1.9 A 4 in. (102 mm) diameter porous drain pipe shall be provided around the perimeter of the floor to ensure positive drainage of melted snow and rainwater from inside the dike.

9.4.1.9.1 The outlet of the pipe also shall serve as a telltale leak detector for the tank.

9.4.1.10 A cement-lined gutter, as shown in Figure B.1(e), shall be provided through the top and down the outside of the end wall nearest the inlet/outlet fitting to provide positive drainage of melted snow and rainwater from the tank top.

9.4.1.11 The exterior sides and top of the dike walls shall be protected against surface erosion.

9.4.2 Installation. Installation of the tank in the prepared embankment shall be accomplished with the assistance of the tank manufacturer's field technician.

9.4.2.1 The tank shall be shipped to the site packaged in a material that is designed for ease of handling by a crane and winch and that facilitates efficient placement in the enclosure.

9.4.2.2 The fittings shall be installed on-site.

--`,,```,,,,````-`-`,,`,,`,`,,`---

Copyright National Fire Protection Association
Provided by IHS under license with NFPA
No reproduction or networking permitted without license from IHS
Not for Resale

9.4.2.3 At the time of installation, the tank shall be filled, and final adjustments on the tank shall be made to ensure that it rests uniformly against the embankment on all four sides.

9.4.2.3.1 Adjustments in anchoring stakes shall be made at this time.

9.4.2.3.2 The stakes shall be installed in accordance with Figure B.1(e).

9.4.2.3.3 The tank shall be secured entirely around the top periphery of the embankment walls using ropes that pass through straps that are built on the outer surface of the tank and that are tied around the stakes.

9.4.2.3.4 This entire operation shall be carried out under the direction of the tank manufacturer's field technician.

9.5 Tank Sump and Support for Bottom Fittings.

9.5.1* Inlet/Outlet. The concrete pad that contains the common inlet/discharge fitting and drain fitting for the tank shall be located near a corner of the embankment floor with the centerline of the inlet/discharge fitting located a minimum of 7 ft (2.1 m) from the bottom edges of the sloping embankment walls.

9.5.2 Finish. The surface of the concrete pad shall be smooth, and the edges shall be rounded.

9.5.2.1 The soil-to-concrete interface around the pad shall have a slight shoulder of sand to support the tank so that the coated-fabric construction of the tank is not abraded on the edge of the concrete.

9.6 Pipe Connections and Fittings.

9.6.1 General Information. The tank fittings, accessories, and piping connections shall be as shown in Figure B.1(f). The fittings attached to the tank shall be of flanged type.

9.6.1.1 All metal parts shall be corrosion resistant.

9.6.2 Fittings Attached to Tank.

9.6.2.1 The tank shall include either one or two access manhole fittings with cover plates in the top surface. A vent pipe with a pressure relief cap shall be attached to each manhole fitting.

9.6.2.2 The fittings that are located in the bottom of the tank shall include a combination inlet/outlet fitting and a drain fitting. Both of these fittings shall be located and secured to the concrete sump in the bottom of the tank.

9.6.2.3 A vortex-plate assembly, as shown in Figure B.1(f), shall be bolted to the combination inlet/outlet fitting.

9.6.2.3.1 The vortex-plate assembly, in addition to controlling vortex flow, shall serve as a guard so that it is possible to pump the calculated water capacity out of the tank at a high rate of flow.

9.6.2.4* An overflow shall be provided and shall be sized for the filling rate or shall be sized 2 in. (51 mm) larger than the fill line.

9.6.3 Water-Level Gauge. The tank shall be provided with a water-level gauge that consists of a sight glass that is constructed of clear acrylic tubing of 2⅜ in. (60 mm) outside diameter.

9.6.3.1 Where subject to freezing, the water gauge assembly shall be installed in the heated pump house.

Chapter 10 Concrete Gravity Tanks and Suction Tanks

10.1 General. The design, materials, and construction of concrete tanks shall conform to ACI 318 and ACI 350R, with water considered as a live load.

10.2 Prestressed Tanks. Prestressed concrete water tanks shall conform to AWWA D110.

10.3 Standard Capacities. This chapter provides requirements for reinforced concrete tanks of 10,000 gal to 500,000 gal (37.85 m^3 to 1892.50 m^3) and prestressed concrete tanks of 10,000 gal to 1,000,000 gal (37.85 m^3 to 3785.00 m^3) net capacity.

10.3.1 Tanks of larger capacities shall be permitted.

10.4 Earthquake Load. Concrete tanks shall meet the requirements for resisting earthquake damage by complying with the earthquake provisions of ACI 350R.

10.4.1 Earthquake requirements for prestressed concrete tanks shall comply with the earthquake provisions of AWWA D110 or AWWA D115, as applicable.

10.5 Wall Treatments. Concrete tank walls shall be made impermeable by means of an impervious membrane or coating that is applied to the interior surface of the tank to prevent visible leakage or seepage through the tank wall.

10.5.1 Tank designs that are not subject to such leakage shall not be required to be made impermeable.

Chapter 11 Fiberglass-Reinforced Plastic Tanks

11.1 General. Fiberglass-reinforced plastic tanks shall be permitted to be used for fire protection systems when installed in accordance with this standard.

11.2* Application. Fiberglass-reinforced plastic tanks shall be permitted only for storage of water at atmospheric pressure.

11.3* Tank Specification. Fiberglass-reinforced plastic tanks shall meet the requirements of AWWA D120.

11.4 Monolithic Tanks. Monolithic tanks shall be tested for leakage by the manufacturer prior to shipment.

11.4.1 Tanks that are assembled on site shall be tested for leakage by the manufacturer.

11.5 Protection of Buried Tanks.

11.5.1 Tanks shall be designed to resist the pressure of earth against them.

11.5.2 Tanks shall meet local building code requirements for resisting earthquake damage.

11.5.3 Tanks shall be installed in accordance with the manufacturer's instructions and 11.5.4 through 11.5.13.

11.5.4 Bedding and backfill shall be noncorrosive inert material, of a type recommended by the tank manufacturer, such as crushed stone or pea gravel that is properly compacted.

11.5.5 Tanks shall be set on the minimum depth of bedding, as recommended by the tank manufacturer, that extends 1 ft (0.3 m) beyond the end and sides of the tank.

Copyright National Fire Protection Association
Provided by IHS under license with NFPA
No reproduction or networking permitted without license from IHS
Not for Resale

11.5.6 Tanks shall be located completely below the frost line to protect against freezing.

11.5.7 Where tanks are buried below railroad tracks, the minimum depth of cover shall be 4 ft (1.2 m).

11.5.8 Where the tanks are not subjected to traffic, tanks shall be covered with not less than 12 in. (305 mm) of compacted backfill and topped with up to 18 in. (457 mm) of compacted backfill or with not less than 12 in. (305 mm) of compacted backfill, on top of which shall be placed a slab of reinforced concrete not less than 4 in. (100 mm) thick.

11.5.9 Where tanks are, or are likely to be, subjected to traffic, they shall be protected from vehicles passing over them by at least 36 in. (914 mm) of backfill, or 18 in. (457 mm) of compacted backfill, of a type recommended by the tank manufacturer, plus either 6 in. (152 mm) of reinforced concrete or 9 in. (229 mm) of asphaltic concrete or greater where specified by the tank manufacturer.

11.5.10 Where asphaltic or reinforced concrete paving is used as part of the protection, it shall extend at least 12 in. (305 mm) horizontally beyond the outline of the tank in all directions.

11.5.11 Tanks shall be safeguarded against movement when exposed to high groundwater or floodwater by anchoring with non-metallic straps to a bottom hold-down pad or deadman anchors with fittings built up or protected to prevent corrosion failure over the life of the tank or by securing by other equivalent means using recognized engineering standards.

11.5.12 The depth of cover shall be measured from the top of the tank to the finished grade, and due consideration shall be given to future or final grade and the nature of the soil.

11.5.13 Maximum burial depths, measured from the top of the tank, are established by underground tank manufacturers and independent testing laboratories. Maximum burial depth shall be specified by the tank manufacturer and shall be marked on the tank.

11.6 Protection of Aboveground Tanks

11.6.1 Tanks shall meet local building code requirements for resisting earthquake damage.

11.6.2 Tanks shall be installed in accordance with the manufacturer's instructions and 11.6.3 through 11.5.13.

11.6.3 Fiberglass-reinforced plastic (FRP) tanks located inside a building shall be protected by automatic sprinklers in accordance with ordinary hazard Group 2 occupancies.

11.6.3.1 Where the hazard is greater than OH2, protection shall be in accordance with NFPA 13.

11.6.4 Horizontal fiberglass-reinforced plastic tanks that are greater than 4 ft (1.2 m) in diameter and are positioned 18 in. (457 mm) or greater above finished floor shall be protected in accordance with the obstruction rules of NFPA 13.

11.6.5 Fiberglass tanks installed outdoors shall be protected from freezing and mechanical and UV damage.

11.7 Tank Connections.

11.7.1 Tanks shall have a vent that extends above the ground to prevent against pressurization of the tank during filling and creation of a vacuum during use. Tank venting systems shall be provided with a minimum 2.0 in. (50 mm) nominal inside diameter.

11.7.2* For underground tanks, water level monitoring required by 14.1.8 shall be capable of being read above ground.

11.7.3* Tanks shall have an accessible method of filling the tank above ground.

11.7.4* Tanks that are used as cisterns for providing fire flow to fire department apparatus shall have a dry hydrant assembly with threads acceptable to the authority having jurisdiction.

11.7.5 Tanks used as cisterns for providing fire flow to fire department apparatus shall be located such that the lowest water in the tank used for fire protection is not more than 15 ft (4.6 m) below the grade where the fire department apparatus will site to extract water from the tank.

Chapter 12 Tank and Tower Foundations in the Ground

12.1 Concrete Specifications. Concrete foundations and footings shall be built of concrete with a specified compressive strength of not less than 3000 psi (20.69 MPa). Design, materials, and construction shall conform to ACI 318, with water considered as a live load.

12.2 Suction Tank Foundations.

12.2.1 Suction tanks shall be set on a compacted crushed stone or granular base or on concrete foundations.

12.2.1.1 At least 3 in. (76.2 mm) of clean, dry sand, laid on the compacted grade, shall be provided at the finished tank grade and shall slope up toward the center of the tank at the rate of 1 in. in 10 ft (25.4 mm in 3 m).

12.2.1.2 The junction of the tank bottom and the top of the concrete ring wall shall be tightly sealed to prevent water from entering the base.

12.2.1.3 For tanks supported on concrete slab foundations, a sand cushion at least 1 in. (25.4 mm) thick or a ½ in. (12.7 mm) cane fiber joint filler that complies with ASTM D 1751 shall be provided between the flat bottom and the foundation. Where a starter ring that is installed in accordance with 6.4.1.3 is embedded in a concrete slab floor, the sand cushion and cane fiber joint filler shall not be required.

12.2.1.4 Embankment-supported coated fabric suction tank foundations shall comply with Section 9.4.

12.2.2 A 10 in. (254 mm) reinforced concrete ring wall that extends below the frost line at least 2.5 ft (0.76 m) below finished grade shall be placed directly beneath the tank shell where tanks are supported on crushed stone or granular bases.

12.2.2.1 The ring shall project at least 6 in. (152 mm) above the surrounding grade and shall be reinforced against temperature and shrinkage and shall be reinforced to resist the lateral pressure of the confined fill with its surcharge.

12.2.2.2 The minimum reinforcement shall conform to Chapter 14, Section 14.3 of ACI 318.

12.2.2.3 The tops of ring wall foundations shall be level within ¼ in. ±½ in. (6.4 mm ±3.2 mm) in one plate length [approximately 34 ft (10.4 m)], and no two points on the wall shall differ by more than ½ in. ±¼ in. (12.7 mm ±6.4 mm).

Copyright National Fire Protection Association
Provided by IHS under license with NFPA
No reproduction or networking permitted without license from IHS
Not for Resale

12.2.2.4 In lieu of a concrete foundation, steel suction tanks of 4000 gal (15.1 m^3) or less shall be permitted to be supported on granular berms, with or without steel retainer rings, in accordance with AWWA D100 or AWWA D103, as applicable.

12.2.3 Where soil does not provide direct support for the tank without excessive settlement, shallow foundation construction shall not be adequate, and a proper foundation shall be designed by a foundation engineer.

12.3 Foundation Piers for Elevated Tanks.

12.3.1 The tops of foundation piers shall be level, shall be at least 6 in. (152 mm) above grade, and shall be located at the correct elevations.

12.3.2 The bottom of foundations shall be located below the frost line or at least 4 ft (1.2 m) below grade, whichever is greater.

12.3.3 Pier foundations shall be of any suitable shape and shall be of either plain or reinforced concrete.

12.3.3.1 Where the pier foundation supports a tower, the center of gravity of the pier shall lie in the continued center of the gravity line of the tower column, or it shall be designed for the eccentricity.

12.3.3.2 The top surface shall extend at least 3 in. (76 mm) beyond the bearing plates on all sides and shall be chamfered at the edge.

12.4 Anchorage.

12.4.1 The weight of the piers shall be sufficient to resist the maximum net uplift that occurs when the tank is empty and wind loads are on the structure, as specified in previous sections.

12.4.1.1 The wind shall be considered to be blowing from any direction.

12.4.1.2 The weight of earth located vertically above the base of the pier shall be permitted to be included.

12.4.2 Anchor bolts shall be arranged to securely engage a weight at least equal to the net uplift when the tank is empty and the wind is blowing from any direction.

12.4.2.1 The lower ends of the anchor bolts shall be hooked or fitted with an anchor plate.

12.4.3 Anchor bolts shall be accurately located with sufficient free length of thread to fully engage their nuts.

12.4.3.1 Expansion bolts shall not be acceptable.

12.4.3.2 Anchor bolts and nuts that are exposed to weather, water, or corrosive environments shall be protected by one of the following methods:

(1) Galvanizing
(2) Corrosion-resistant alloys
(3) Field-applied coating after installation

12.4.3.3 The minimum size of anchor bolts shall be 1¼ in. (32 mm).

12.4.3.3.1 Anchor bolts and nuts less than 32 mm (1¼ in.) in diameter, but not less than ¾ in. (19.1 mm) in diameter, shall be permitted to be used, provided they are protected in accordance with 12.4.3.2(1) or (2).

12.5 Grouting. Bearing plates or base plates shall have complete bearing on the foundation or shall be laid on 1 in. (25.4 mm) minimum thickness cement grout to secure a complete bearing.

12.5.1 The stressed portions of anchor bolts shall not be exposed.

12.5.1.1 If the stressed portions of anchor bolts must be exposed, they shall be protected from corrosion by encasement in cement mortar.

12.5.1.2 If exposed anchor bolts are accessible for complete cleaning and painting, it shall not be necessary to encase them in cement mortar.

12.6 Soil-Bearing Pressures.

12.6.1 The design soil-bearing pressure and the corresponding depth of foundation shall be determined by subsurface investigation and by a review of foundation experience in the vicinity.

12.6.1.1* Such an investigation shall include test borings made by or under the supervision of an experienced soils engineer or soils testing laboratory and to the depth necessary to determine the adequacy of support.

12.6.2 Where the presence of limestone or other soluble rock types are suspected, subsurface investigation shall include cavity investigation and competency of bedrock.

12.6.2.1 The potential for subsidence, collapse, soil liquefaction, and settlement shall be evaluated.

12.6.3 The design soil-bearing pressure shall not exceed a pressure that can cause settlements that impair the structural integrity of the tank.

12.6.4 Foundations shall not be constructed over buried pipes or immediately adjacent to existing or former deep excavations.

12.6.4.1 This requirement shall not apply where foundation bases extend below the excavation.

12.6.5 The design soil-bearing pressure shall provide for a factor of safety of 3 based on the calculated ultimate bearing capacity of the soil for all direct vertical loads, including wind moment load on the columns.

12.6.5.1 The factor of safety shall not be less than 2 when considering the toe pressure for the direct vertical loads, plus the overturning moment caused by wind shear at the tops of individual piers.

Chapter 13 Steel Tank Towers

13.1 General.

13.1.1* This section shall define the design, fabrication, and erection of steel towers to support water tanks.

13.1.2 Height. The height of the tower shall be the vertical distance from the top of the foundation to the bottom capacity line of the tank.

13.1.3 Strength.

13.1.3.1 The material specified shall be without defects that affect the strength or service of the structure.

13.1.3.2 The workmanship shall be of such quality that defects or injuries are not produced during manufacture or erection.

Copyright National Fire Protection Association
Provided by IHS under license with NFPA
No reproduction or networking permitted without license from IHS
Not for Resale

13.1.3.3 The unit stresses specified shall not be exceeded.

13.1.3.4 The structures and their details shall possess the requisite strength and rigidity.

13.1.4 Details. The details shall comply with the requirements of this chapter and, where not covered herein, to AWS D1.1.

13.2 Materials.

13.2.1 Plates, Shapes, and Tubular Columns.

13.2.1.1 Plates. Plate materials shall be of open-hearth, electric furnace, or basic oxygen process steel that conforms to the following:

(1) ASTM A 36
(2) ASTM A 283, Grades A, B, C, and D

13.2.1.1.1 Where plates of thicknesses greater than ¾ in. (19.1 mm) are used, ASTM A 283, Grade D, shall not be used. ASTM A 131, Grades A, B, and C; ASTM A 285, Grades A, B, and C; or ASTM A 516, Grades 55 and 60, shall be permitted to be used as alternatives.

13.2.1.2 Shapes. Structural materials shall be open-hearth, electric furnace, or basic oxygen process steel that conforms to ASTM A 36; ASTM A 131, Grade A, B, or C; or ASTM A 992/A 992M.

13.2.1.2.1 Copper-bearing steel that contains approximately 0.20 percent copper shall be used.

13.2.1.2.2 In all other respects, steel shall conform to the specifications of 13.2.1.1 and 13.2.1.2.

13.2.1.3 Tubular Columns. Steel pipe shall be permitted to be used for tubular columns or other structural members, provided it complies with ASTM A 53, Type E or Type S, Grade B; ASTM A 139, Grade B; and API 5LC, Grade B, and provided the minimum wall thickness complies with the design requirements and the minimum thickness requirement of this standard.

13.2.1.3.1 The allowable underrun shall be subtracted from the nominal wall thickness when calculating the minimum pipe wall thickness.

13.2.1.3.2 Tubular sections shall not be flattened to form end connections.

13.2.2 Bolts, Anchor Bolts, and Rods.

13.2.2.1 Bolts and anchor bolts shall conform to ASTM A 307, Grade A or Grade B. ASTM A 36 shall be considered an acceptable alternative material for anchor bolts.

13.2.2.2 Rods shall be open hearth, electric furnace, or basic oxygen process steel that conforms to ASTM A 36.

13.2.3 Pins.

13.2.3.1 Pins shall comply with any of the following:

(1) ASTM A 36
(2) ASTM A 108, Grade 1018 or Grade 1025
(3) ASTM A 307, Grade A or Grade B

13.2.3.2 Size and diameter tolerances of turned pins shall be equal to that of cold-finished shafting. The surface finish shall depend on the application but shall not be rougher than 125 micro-in. (3.18 µm).

13.2.4 National Standards. Materials produced and tested in accordance with the requirements of a recognized national standard and within the mechanical (strength), metallurgical, and chemical limitations of one of the material grades specified in this section shall be acceptable where approved by the authority having jurisdiction.

13.3 Loads.

13.3.1 Dead Load.

13.3.1.1 The dead load shall be the estimated weight of all permanent construction and fittings.

13.3.1.2 The unit weight of steel shall be considered to be 490 lb/ft^3 (7849 kg/m^3), and the unit weight of concrete shall be considered to be 144 lb/ft^3 (2307 kg/m^3).

13.3.2 Live Load.

13.3.2.1 Under normal conditions, the live load shall be the weight of all the liquid when it overflows the top of the tank.

13.3.2.2 The unit weight of water shall be considered to be 62.4 lb/ft^3 (1000 kg/m^3).

13.3.2.3 Proper provision shall be made for temporary stresses during erection.

13.3.2.4 Where roofs have a slope of less than 30 degrees, they shall be designed to support a uniform weight of 25 lb/ft^2 (122 kg/m^2) on the horizontal projection.

13.3.3 Live Load — Large Risers.

13.3.3.1 The water located directly above any riser shall not be considered to be carried by the tower columns.

13.3.3.1.1 Such water shall be considered to be carried by the tower columns where the riser is suspended from the tank bottom or from the tower columns.

13.3.3.2 If a hemispherical or ellipsoidal tank bottom is rigidly attached to the top of a large riser by a flat horizontal diaphragm plate and the riser is supported by a separate solid foundation or is suspended from the tower, the riser plate shall be considered as supporting the water load in a hollow cylinder having an outside radius equal to the radius of the riser at the tank bottom plus one-half the distance from the edge of the riser to the connection of the flat horizontal diaphragm plate to the hemispherical or ellipsoidal bottom plates.

13.3.3.2.1 The inside radius of the hollow cylinder shall be considered to be equal to the radius of the riser at the tank bottom.

13.3.3.2.2 The load shall be deducted from the weight of the tank water when designing the tower.

13.3.3.2.3 The load shall not be required to be deducted from the weight of the tank water where the riser is suspended from the tower.

13.3.3.3 If a hemispherical or ellipsoidal shape is continuous to the shell of a large riser without a flat horizontal diaphragm plate and the riser is supported by a separate solid foundation or is suspended from the tower, the riser plate shall be designed to carry the water load of a hollow cylinder that extends from the bottom of the tank to the top of the tank.

13.3.3.3.1 The outside radius of the hollow cylinder shall be assumed to be 2 ft (0.61 m) greater than, and the inside radius shall be assumed to be equal to, the radius of the riser shell at the tank bottom.

Copyright National Fire Protection Association
Provided by IHS under license with NFPA
No reproduction or networking permitted without license from IHS
Not for Resale

13.3.3.3.2 The load shall not be deducted from the tank water load when designing the tank and tower.

13.3.3.3.3 The load shall be permitted to be deducted for the tower design of tanks with ellipsoidal bottoms of a flat shape at the connection to risers supported by a separate solid foundation.

13.3.3.4 If the tank bottom is a torus shape, the riser plate shall be designed to carry the weight of all water in the tank between a cylinder that intersects the bottom at its lowest elevation and a cylinder that is equal to the diameter of the riser.

13.3.3.4.1 The load shall be deducted from the weight of the tank water when designing the tower.

13.3.4 Wind Load.

13.3.4.1 The wind pressure shall be assumed to be 30 lb/ft^2 (147 kg/m^2) on a vertical plane surface.

13.3.4.2 In calculating the wind load on a cylindrical surface, 18 lb/ft^2 (88 kg/m^2) shall be applied to the total area of the vertical projection, and the point of application of the load shall be at the center of gravity of the projected area.

13.3.4.3 The load on the tower shall be assumed to be concentrated at the panel points.

13.3.4.4 When designing for wind velocities over 100 mph (161 km/hr), all of these specified unit pressures shall be adjusted in proportion to the square of the velocity, assuming that the pressures are for velocities of 100 mph (161 km/hr).

13.3.5 Balcony and Ladder Loads.

13.3.5.1 A vertical load of 1000 lb (454 kg) shall be assumed to be applied to any 10 ft^2 (0.93 m^2) of area on the balcony floor and on each platform; 500 lb (227 kg) shall be assumed to be applied to any 10 ft^2 (0.93 m^2) of area on the tank roof; and 350 lb (159 kg) shall be assumed to be applied to each vertical section of ladder.

13.3.5.2 All structural parts and connections shall be designed to withstand such loads.

13.3.5.3 The loadings specified shall not be combined with snow loading.

13.3.6 Earthquake Load. Tank towers shall meet the requirements for resisting earthquake damage by complying with the earthquake design load provisions of AWWA D100 and 13.4.7.2.

13.4 Unit Stresses.

13.4.1 General. The maximum stresses in pounds per square inch (megapascals) produced by the loads specified in Section 13.3 shall not exceed the values specified in Table 13.4.1 and Table 13.4.3 through Table 13.4.5.

13.4.2 Slenderness Ratio. The maximum permissible slenderness ratio, *L/r*, for compression members that carry the weight or pressure of the tank contents shall be 120.

13.4.2.1 The maximum permissible slenderness ratio, *L/r*, for compression members that carry the loads from wind and earthquake only shall be 175.

13.4.2.2 The maximum permissible slenderness ratio, *L/r*, for columns that carry roof loads only shall be 175.

13.4.3 Bending. Table 13.4.3 shall be used for bending requirements.

13.4.4 Shearing. Table 13.4.4 shall be used to determine maximum shear stress requirements.

13.4.5 Bearing. Table 13.4.5 shall be used to determine maximum bearing stress.

13.4.6 Combined Stresses. Members subject to both axial and bending stresses shall be so proportioned that the sum of the stresses at the critical point does not exceed the allowed axial stress.

13.4.7 Wind and Earthquake Allowances.

13.4.7.1 Wind.

13.4.7.1.1 For stresses due to a combination of dead load, live load, and wind load as specified in this standard, and for stresses due to wind load alone, the working stresses specified in Table 13.4.1 and Table 13.4.3 through Table 13.4.5 shall be permitted to be increased a maximum of 33⅓ percent.

13.4.7.1.2 In no case shall the resulting stresses be less than those required for dead and live loads alone.

13.4.7.2 Earthquake.

13.4.7.2.1 For stresses due to a combination of dead load, live load, and earthquake load as specified in this standard, and for earthquake load alone, the working stresses of Table 13.4.1 and Table 13.4.3 through Table 13.4.5 shall be permitted to be increased up to 33⅓ percent.

13.4.7.2.2 In no case shall the resulting stresses be less than those required for dead and live loads alone.

13.4.7.3 Wind and earthquake shall not be required to be considered as acting simultaneously.

13.4.8 Fillet and Groove Welds. Welded joints shall be proportioned so that the loads specified in Section 13.3 shall not cause stresses therein in excess of the design stresses obtained by applying the efficiencies in AWWA D100 to the allowable working stresses in the base material.

13.5 Details of Design.

13.5.1 Sections.

13.5.1.1 Sections shall be symmetrical.

13.5.1.2 Members shall be built of standard structural shapes or of tubular sections.

13.5.1.3 Structural shapes shall be designed with open sections to allow painting of all surfaces exposed to air or moisture and subject to corrosion.

13.5.1.4 Tubular sections of columns and struts shall be airtight.

13.5.2 Minimum Thickness — General.

13.5.2.1 The minimum thickness of metal shall be ¼ in. (6.4 mm).

13.5.2.2 The minimum size of sway rods shall be ¾ in. (19.1 mm).

13.5.2.3 The requirements for minimum thickness of metal shall not apply to the webs of channels and I-beams and to minor parts that carry no load.

13.5.3 Columns.

13.5.3.1 Splices.

13.5.3.1.1 Column splices shall be designed to withstand the maximum possible uplift or at least 25 percent of the maximum compression, whichever is greater.

--`,,```,,,,````-`-`,,`,,`,`,,`---

Copyright National Fire Protection Association
Provided by IHS under license with NFPA
No reproduction or networking permitted without license from IHS

Not for Resale

Table 13.4.1 Allowable Unit Stress

Axial Tension: On net section, rods, and ASTM A 36 structural steel shapes 15,000 psi (1034 bar)

Axial Compression: Gross section of columns and struts of structural shapes:

$$\frac{P}{A} = \left(1 + \frac{\frac{18{,}000}{L^2}}{18{,}000\ r^2} \right) \text{ or 15,000 psi (1034 bar), whichever is smaller}$$

For tubular columns and struts:

$$\frac{P}{A} = XY, \text{ where } X = 1 + \left(\frac{\frac{18{,}000}{L^2}}{18{,}000\ r^2} \right) \text{ or 15,000 psi (1034 bar), whichever is smaller, and}$$

(1) $$Y = \left(\frac{2}{3}\right)\left(100\frac{t}{R}\right)\left[\left(2 - \frac{2}{3}\right)\left(10\frac{t}{R}\right)\right]$$

(2) $Y =$ unity (1.00) for values of $\frac{t}{R}$ equal to or greater than 0.015

where:
P = total axial load [lb (kg)]
A = cross-sectional area [in.^{2}(mm^2)]
L = effective length [in. (mm)]
r = least radius of gyration [in. (mm)]
R = radius of tubular member to the exterior surface [in. (mm)]
t = thickness of tubular member (in.); minimum allowable thickness — ¼ in. (6.38 mm)

All circumferential joints in tubular sections shall be butt joints welded for complete penetration. Compression on short lengths — 18,000 psi (124.11 MPa) *(see 13.5.5)*.

13.5.3.1.2 The abutting joints of welded tubular columns shall be either butt welded with a backer strip or spliced by plates welded to both sections that are being joined.

13.5.3.1.3 Where a horizontal plate of ¼ in. (6.4 mm) minimum thickness is used to seal the top and bottom of a column section, the backing strip or splice plate shall be omitted.

13.5.3.2 Strength of Diaphragm in Tubular Columns.

13.5.3.2.1 A diaphragm or equivalent means of resistance to local tube distortion shall be provided at all panel points, at points of concentrated loading, and at the top diagonal wind rod connections.

13.5.3.2.2 Where a horizontal plate [minimum thickness of ¼ in. (6.4 mm)] is used to seal the top or bottom of a column section, or both, and is located within 18 in. (457 mm) of the panel point, a diaphragm plate shall not be required.

13.5.4 Combined Shapes.

13.5.4.1 Combined shapes shall be separated by at least ⅜ in. (9.5 mm) if they are not in contact.

13.5.4.2 For tension members with component parts that are separated by spacers, the spacers shall not be over 3 ft 6 in. (1.07 m) apart and shall be attached by welding or bolting.

13.5.5 Starred Angles.

13.5.5.1 Compression members that are built of two angles in a star section shall have pairs of tie plates or angles spaced not over 20 in. (0.51 m) on center for 3 in. (76 mm) angles; 24 in. (0.61 m) for 4 in. (102 mm) angles; 36 in. (0.91 m) for 5 in. (127 mm) angles; 42 in. (1.07 m) for 6 in. (152 mm) angles; and 48 in. (1.22 m) for 8 in. (203 mm) angles.

13.5.5.2 The tie plates or angles shall be connected to each of the angles of the compression members by not less than two bolts, and at least three bolts shall be used in 6 in. (152 mm) or 8 in. (203 mm) angles.

13.5.5.3 Equivalent welded tie plates shall be permitted to be used.

13.5.6 Connections — General.

13.5.6.1 The strength of connections shall be sufficient to transmit the full stress in the member.

13.5.6.2 A group of bolts that is located at the end of any member that transmits stress into that member shall have its center of gravity in the line of the center of gravity of the member, or provisions shall be made for the effect of the resulting eccentricity.

Copyright National Fire Protection Association
Provided by IHS under license with NFPA
No reproduction or networking permitted without license from IHS
Not for Resale

Table 13.4.3 Maximum Bending Stress

	psi	MPa
Tension on extreme fibers, except column base plates	15,000	103.43
Column base plates	20,000	137.90
Compression on extreme fibers of rolled sections, and plate girders and built-up members for values of:		
$\frac{ld}{bt}$ not in excess of 600	15,000	103.43
$\frac{ld}{bt}$ in excess of 600	9,000,000	62,055
	$\frac{ld}{bt}$	$\frac{(l)(d)}{(b)(t)}$
where l is the unsupported length; d is the depth of the member; b is the width; and t is the thickness of its compression flange, all in in. (mm); except that l shall be assumed to be twice the length of the compression flange of a cantilever beam not fully stayed at its outer end against translation or rotation.		
Pins, extreme fiber	22,500	155.14
Cast steel	11,250	77.57

Table 13.4.4 Maximum Shear Stress

	psi	MPa
Pins and turned bolts in reamed or drilled holes	11,250	77.57
Unfinished bolts	7,500	51.71
Webs of beams and plate girders, gross section	9,750	67.23
Cast steel	7,325	50.51
Tank plates and structural connection materials	11,250	77.57

13.5.6.3 Connections between the columns, struts, and tension members shall be made by gusset plates that can also serve as splice plates.

13.5.6.4 Diagonal bracing shall, where possible, be connected to the same gusset plates that connect the columns and struts.

13.5.6.5 Bolts shall not be subjected to tensile stress.

13.5.7 Pins.

13.5.7.1 Adjustable tension members shall be connected to gusset plates by finished or cold-rolled steel pins.

13.5.7.2 Pins shall be headed on one end and threaded on the other, threaded on both ends, or plain on both ends with washers welded onto the ends.

13.5.7.3 Threaded ends shall be fitted with nuts, and the threads shall be burred outside the nuts to prevent easy removal of the nuts.

13.5.8 Net Area of Pin-Plate. The net area of the gusset-plate section ahead of a clevis pin shall not be less than 62.5 percent of the net area of the tension member.

13.5.9 Clevises, Forked Ends, and Turnbuckles.

13.5.9.1 Bar or plate clevices, forged clevis nuts, or forked ends shall be used to connect adjustable tension members to the clevis pins.

13.5.9.1.1 The strength of clevises shall not be less than that of the tension member.

13.5.9.1.2 The minimum sectional area through forked ends shall not be less than the area of the tension member at its smallest section.

13.5.9.2 Clevis plates shall be fusion-welded to wind rods.

13.5.9.2.1 There shall be two plates at each end of the rod.

13.5.9.2.2 The plates shall be symmetrical.

13.5.9.2.3 There shall be no open spaces between the rod and the clevis plates.

13.5.9.2.4 The plates shall be bent in easy lines to reduce the stretch under the load to a minimum, or they shall be flat with filler plates on the pin.

Copyright National Fire Protection Association
Provided by IHS under license with NFPA
No reproduction or networking permitted without license from IHS
Not for Resale

Table 13.4.5 Maximum Bearing Stresses

	Double Shear		Single Shear	
	psi	MPa	psi	MPa
Turned bolts in reamed or drilled holes	30,000	206.85	24,000	165.48
Unfinished bolts	18,750	129.28	15,000	103.43
Pins		24,000	165.48	
Contact area of milled surfaces		22,500	155.14	
Contact area of fitted stiffeners		20,250	139.62	
Expansion rollers and rockers [lb/linear in. (kg/linear mm)] where *d* is the diameter of roller or rocker (in.)			600*(d)*	0.163*(d)*

13.5.9.2.5 In all cases, the clevis pin shall be designed to carry the maximum stresses, including bending, without overstressing.

13.5.9.3 Turnbuckles shall be of the open type and shall have a strength of not less than that of the tension member.

13.5.10 Tank Connection.

13.5.10.1 The center of gravity lines of the column circular girder and the lowest plate of the tank cylinder shall meet at a point, or the columns shall be designed for the eccentricity.

13.5.10.2 The combined axial and bending stress in the detail that connects the top of the column to the tank plate shall not be more than 33⅓ percent in excess of the allowable axial working stress, which, in the case of compression, is that stress permitted for short lengths.

13.5.11 Tie Plates. The main constituent parts of columns shall be solidly tied together at the points of connection of tension or compression members.

13.5.12 Length of Tension Members. The horizontal projection of the unsupported length in inches (millimeters) of a nonadjustable tension member in a horizontal or inclined position shall not exceed 200 times the radius of gyration about the horizontal axis.

13.5.13 Column Bases and Caps.

13.5.13.1 Columns shall have bases built of steel plates and structural shapes.

13.5.13.2 The lower end of each column shall be faced and shall bear fully on the base plate, or it shall have sufficient welding to transmit loads to the base plate.

13.5.13.3 The base plate and anchor bolt connections to the column shall be designed to load the foundation uniformly and also to transmit the net uplift from the column when subjected to the greatest possible wind stress to the foundation when the tank is empty.

13.5.13.4 Footings either shall be designed without pockets or shall be filled with concrete and flashed with asphalt to prevent the collection of dirt and moisture inside.

13.5.13.5 Where the tower supports a flat-bottom tank, the columns shall have steel caps that are designed to transmit the load from the grillage beams concentrically to the columns.

13.5.13.5.1 The upper ends of the columns shall be faced and shall bear fully on the cap plates, or they shall have sufficient welding to transmit all loads to the top plate.

13.5.13.5.2 If the batter of columns exceeds 1.8 in. (46 mm) horizontal to 12 in. (305 mm) vertical, rigid ties shall be provided between the column bases.

13.5.14 Circular Girder with Inclined Columns.

13.5.14.1 Tops of inclined columns shall be connected by a continuous, horizontal circular girder where the tank bottom is suspended.

13.5.14.2 The outer flange shall be symmetrical about the web plate, but, if eccentric, the allowable working stresses for the flanges shall be reduced by 25 percent.

13.5.14.3 The bending moment shall be considered to be carried entirely by the flanges, the shear to be carried by the web, and the compression to be carried by the flanges and web in proportion to their areas at the section considered.

13.5.14.4 Splices shall be designed to transmit the load in the spliced member.

13.5.14.5 The horizontal component of the maximum column load shall be transmitted to the girder by welding.

13.5.14.6 The circular girder shall be permitted to be used as a balcony.

13.5.14.7 Drain holes shall be provided in the web plate.

13.5.15 Circular Girder with Vertical Columns. Where the columns are vertical and the tank bottom is suspended, the circular girder shall be as specified in 13.5.14, or it shall be a structural shape that is connected to the tank by welding.

13.5.16 Interior Bracing.

13.5.16.1 The use of bracing inside the tank shall be avoided if possible but, if used, an additional thickness of 1/16 in.

Copyright National Fire Protection Association
Provided by IHS under license with NFPA
No reproduction or networking permitted without license from IHS
Not for Resale

(1.6 mm) shall be added to the calculated sections to provide for corrosion.

13.5.16.2 The sections shall be open to facilitate cleaning and painting.

13.5.17 Top Struts. The thrust from battered columns that support a flat-bottom tank shall be resisted by struts that are connected to the extreme top of the columns or to the cap plates on all sides of the tower.

13.5.18 Grillage.

13.5.18.1 Where the tower supports a flat-bottom tank, all of the supporting beams shall be of steel and shall be welded or bolted to the post cap girders.

13.5.18.2 The latter shall be either welded or bolted to the column caps and shall be braced to prevent overturning.

13.5.18.3 The load on the outside grillage beams shall be considered as increasing from zero at the ends to a maximum at the center.

13.5.19 Base Braces.

13.5.19.1 Where the tower is supported by a building, insecure earth, or foundations that extend more than approximately 1 ft (0.3 m) above grade, rigid members shall be placed between the adjacent column bases or foundations.

13.5.19.2 Rigid members shall be provided between adjacent column bases where the columns are welded to the base plates and the batter exceeds 1.8 horizontal to 12 vertical.

13.5.20 Web Stiffeners.

13.5.20.1 Web stiffeners shall be provided at points of concentrated loading on beams and girders where necessary to prevent the buckling of webs.

13.5.20.2 Web stiffeners shall be designed in accordance with the specifications of the American Institute of Steel Construction.

13.5.21 Large Risers, Water Spheres.

13.5.21.1 Large steel-plate pipes of 3 ft (0.91 m) or more in diameter shall be designed to withstand stress caused by the weight or pressure of the tank and riser contents and by the weight of the load imposed on the top of the riser pipe by the tank bottom or by members that support the tank bottom, as specified in 13.3.3.2.

13.5.21.2 Where the design of the riser plates is controlled by hoop tension, 0.3 of the compressive stress in the vertical direction shall be added to the total calculated tensile stress in the horizontal direction when determining the thickness of the riser plates.

13.5.21.3 If the design of the riser plates is controlled by vertical compression, 0.3 of the tensile stress in the horizontal direction shall be added to the total calculated compressive stress in the vertical direction where applying the formula in Table 13.4.1.

13.5.21.4 The thickness of the bottom ring of the steel plate shall be sufficient to ensure that the specified unit stresses are not exceeded where combined with bending or other stress around the manhole or other openings.

13.5.21.5 When determining the design of water spheres and conical frustums at the base of the sphere, the symbol *R*, which represents the radius in Table 13.4.1, shall be taken as either the radius of the sphere or the radius of the cone that is perpendicular to the conical surface.

13.5.21.6 The surface of the conical frustum that supports the sphere shall not be inclined to the horizontal at an angle of less than 30 degrees.

13.5.21.6.1 If compression reinforcement is needed at the junction of the conical frustum and the tubular support, the effective width, in in. (mm), of each plate at the joint that can be considered as contributing to the reinforcement shall be limited to the square root of the product of each plate thickness, in in. (mm), and to its respective inside radius, in in. (mm).

13.5.22 Anchor Bolts. There shall be at least two anchor bolts per column in locations that are subject to earthquakes.

13.6 Workmanship.

13.6.1 Shearing. All shearing shall be performed neatly.

13.6.1.1 Material that is over ¾ in. (19.1 mm) thick shall have ⅛ in. (3.2 mm) planed from the sheared edges.

13.6.1.2 Base plates or other plates that do not carry actual stress shall not be required to be planed if thicker than ¾ in. (19.1 mm).

13.6.2 Straightening and Fitting. The pieces that form built sections shall be straight and shall fit closely together.

13.6.3 Use of Bolts and Welding.

13.6.3.1 Members shall be welded throughout.

13.6.3.2 Field connections of nonadjustable tension members that carry wind stress only and compression members and grillages in towers that support tanks of 30,000 gal (113.55 m^3) or less capacity shall use unfinished bolts.

13.6.3.3 The threads of unfinished bolts shall be burred outside of the nuts.

13.6.3.4 High-tensile bolts or the equivalent shall be used in field connections of towers that support tanks of 100,000 gal (378.50 m^3) or less capacity.

13.6.3.5 Where machined bolts are needed, the bolt holes shall be reamed parallel and the bolts shall be machined to a driving fit with the threads burred outside the nuts.

13.6.3.5.1 Where special listed locking devices are provided, the requirements for machined bolts and bolt holes shall not apply.

13.6.4 Threads and Nuts.

13.6.4.1 Screw threads on rods shall be cut or rolled to the U.S. Standard, or screw threads shall be self-locking and shall make tight fits in nuts and turnbuckles.

13.6.4.2 All threads and nuts in turnbuckles shall be engaged.

13.6.4.3 Machined bolts shall have threads that are located entirely outside the holes, and washers not less than ⅛ in. (3.2 mm) thick shall be used under the nuts.

13.6.4.4 Nuts on all bolts shall be drawn tight, and the threads shall be burred outside the nuts.

13.6.5 Grouting of Base Plates.

13.6.5.1 During field erection, tower columns shall be built on thin metal wedges that, after completion of the structure, shall be driven to equal resistance so that all columns are loaded equally.

Copyright National Fire Protection Association
Provided by IHS under license with NFPA
No reproduction or networking permitted without license from IHS
Not for Resale

13.6.5.2 The spaces beneath the base plates and the anchor bolt holes shall be completely filled with portland cement mortar that consists of a minimum of one part portland cement to three parts clean sand.

13.6.6 Assembly.

13.6.6.1 The component parts of built-up members shall be held in firm contact by adequate clamps or other means.

13.6.6.2 Spaces where inaccessible corrosion can form shall not be left between the component parts of members.

13.6.6.3 Erection bolts or other positive devices that impart sufficient strength and stiffness to resist all temporary weights and lateral loads, including wind, shall be used for temporarily fastening the members and bracing the framework.

13.6.7 Alignment. Members and all component parts shall be straight and free from appreciable buckles or warping.

13.6.8 Tubular Column Distortion.

13.6.8.1 The column axis shall not deviate from a straight line by more than 1/1000 of the laterally unsupported length.

13.6.8.2 The difference between the maximum and minimum outside diameters shall not exceed 2 percent of the nominal outside diameter at any cross section.

13.6.8.3 Local dents shall be no deeper than the plate thickness.

13.7 Accessories.

13.7.1 Connections. Connections shall be provided on the tower for the necessary pipe and frostproof casing braces.

13.7.2 Ladders — General.

13.7.2.1 A steel ladder shall be placed on one of the tower columns extending from a point within easy reach of the ground to the balcony around the tank or to the revolving tank ladder.

13.7.2.2 The ladder shall not incline outward from the vertical at any point.

13.7.2.3 Where the tower supports a wood tank or where the balcony is not used as a circular girder, the ladder shall pass through an opening in the balcony of not less than 18 in. × 24 in. (457 mm × 609 mm) in the clear.

13.7.2.4 The ladder shall be securely fastened at its upper end.

13.7.2.5 Welding of ladders and their connections shall be permitted. Ladders for pedestal-supported tanks shall be placed inside the pedestal.

13.7.3 Ladders — Details.

13.7.3.1 The ladder shall have not less than 2 in. × ½ in. (51 mm × 12.7 mm) or 2½ in. × ⅜ in. (64 mm × 9.5 mm) flat side bars spaced at least 16 in. (406 mm) apart and shall have at least ¾ in. (19.1 mm) round or square rungs, spaced 12 in. (305 mm) on centers.

13.7.3.2 The rungs shall be firmly welded to the side bars.

13.7.3.3 The sections of the ladder shall be connected by lap or butt joints.

13.7.3.4 Where joints are bolted, at least two ½ in. (12.7 mm) bolts shall be used on each side of each splice.

13.7.3.5 The ladder shall be connected to the tower column or the pedestal support at least 7 in. (178 mm) between the column and the centerline of the rungs by means of flat bar brackets spaced not over 12 ft (3.7 m) apart.

13.7.3.5.1 The brackets shall be rigidly connected to the column and designed to support a load of 350 lb (159 kg) on the ladder.

13.7.3.5.2 All ladders shall be equipped with a cage, a rigid notched rail, or other listed ladder safety device.

13.7.3.6 Other arrangements of tower ladders shall be permitted, provided approval is first obtained from the authority having jurisdiction.

13.7.3.6.1 Such arrangements shall not be permitted unless made necessary by a special design of tower, and with distances greater than 12 ft (3.7 m) between supports, the side bars of the ladder shall be made of angle iron not lighter than 3 in. × 3 in. × ⅜ in. (76 mm × 76 mm × 9.5 mm) or their equivalent.

13.7.4 Walkway.

13.7.4.1 A walkway at least 18 in. (457 mm) wide that extends from a point that is accessible from the tower ladder to an expansion joint located under the tank and that terminates in a platform with at least a 20 in. (508 mm) clearance around the enlarged portion of the frostproofing casing shall be provided where the tower is 30 ft (9.1 m) or more in height.

13.7.4.2 Walkway flooring shall be of 2 in. (51 mm) dressed planks spaced ½ in. (12.7 mm) apart, or of ¼ in. (6.4 mm) steel plate with drain holes.

13.7.4.3 The walkway and platform shall be rigidly supported and shall be braced laterally to prevent swinging.

13.7.4.4 All supports shall be of steel, and connections shall be welded.

13.7.4.5 A 42 in. (1067 mm) high rigid railing shall be placed on each side of the walkway and around the outer edge of the platform.

13.7.4.5.1 The top rail and posts shall be of not less than 1½ in. (40 mm) pipe or shall be of angle iron not lighter than 2 in. × 2 in. × ⅜ in. (51 mm × 51 mm × 9.5 mm).

13.7.4.5.2 An intermediate rail shall be provided.

13.7.4.5.3 The ends of threads shall be burred on all bolted connections.

13.7.4.5.4 The maximum spacing of rail posts shall not be more than 8 ft (2.4 m).

13.7.4.5.5 The railing shall be designed to withstand a 200 lb (91 kg) load in any direction at any point on the top rail.

13.7.4.5.6 A toe board shall be provided if required.

13.7.5 Balcony.

13.7.5.1 Towers over 20 ft (6.1 m) high that have a horizontal circular girder at the top of the inclined columns to resist the inward thrust from the columns shall be provided with a balcony at least 24 in. (610 mm) wide around the base of the cylindrical portion of the tank.

13.7.5.2 A rigid railing at least 42 in. (1067 mm) high shall be provided around the outside of the balcony.

Copyright National Fire Protection Association
Provided by IHS under license with NFPA
No reproduction or networking permitted without license from IHS
Not for Resale

13.7.5.3 The top rail and posts shall be not lighter than 1½ in. (40 mm) pipe or shall be of 2 in. × 2 in. × ⅜ in. (51 mm × 51 mm × 9.5 mm) angles.

13.7.5.4 An intermediate rail shall be provided.

13.7.5.5 The maximum spacing of rail posts shall not be more than 8 ft (2.4 m).

13.7.5.6 The railing shall be designed to withstand a 200 lb (91 kg) load in any direction at any point on the top rail.

13.7.5.7 A toe board shall be provided if required.

13.7.5.8 A balcony shall not be required for pedestal-supported or tripod-supported tanks.

13.7.5.9 For inclined column tower-supported tanks without a cylindrical shell, a balcony shall not be omitted without the approval of the authority having jurisdiction.

13.7.6* Painting Inaccessible Parts. Inaccessible parts subject to corrosion shall be protected by paint before assembly.

13.7.7 Painting.

13.7.7.1 All steel shall be cleaned, primed, and coated in accordance with 5.7.9.2.

13.7.7.1.1 Where encased in concrete or where edges are to be welded, steel shall not be required to be cleaned, primed, and coated in accordance with 5.7.9.2.

13.7.7.2 Primers for other exterior paint systems shall be permitted to be used.

13.7.8 Field Painting.

13.7.8.1 After construction, all weld seams, unprimed margins, field bolts, and any areas where the paint has been damaged shall be blast-cleaned and patch-primed with the same primer.

13.7.8.2 Two overall finish coats of aluminum or alkyd enamel in a color specified by the purchaser shall be used in accordance with the requirements for "Outside Paint System No. 1" of AWWA D102.

13.7.8.3 The total system dry film thickness shall be 3.5 mil (87 µm) for aluminum finishes and 4.5 mil (112 µm) for alkyd enamels.

13.7.8.4 As provided for by "Outside Paint System No. 4" of AWWA D102, the purchaser shall be permitted to specify an extra complete coat of primer for a total minimum system dry film thickness of 6.0 mil (150 µm) for alkyd enamels for more severe atmospheric exposures.

13.7.8.5 Other finish coats shall be permitted to be used, provided they are compatible with the primer and provided permission is first obtained from the authority having jurisdiction.

13.7.8.6 Finish coats shall be of the same types selected for exterior tank surfaces.

13.7.9 Painting Application. All painting shall be applied in accordance with 5.7.12.

Chapter 14 Pipe Connections and Fittings

14.1* General Information.

14.1.1 Watertight Intersections at Roofs and Floors.

14.1.1.1 The intersections of all tank pipes with roofs and concrete or waterproof floors of buildings shall be watertight.

14.1.1.2 Where tank pipes pass through concrete roofs, a watertight intersection shall be obtained by using fittings that are caulked with oakum or by pouring the concrete solidly around the pipes, which first shall be wrapped with two or three thicknesses of building paper.

14.1.1.3 Where concrete is used, the upper side of the intersection shall be well flashed with a suitable, firm, waterproof material that is noncracking and that retains its adhesion and flexibility.

14.1.1.4 Wood roofs also shall be built tightly around the pipes and shall be made watertight by means of fittings that are caulked with oakum or by using flashing.

14.1.1.5 Where tank pipes pass through a concrete or waterproof floor, a watertight intersection, as described in 14.1.1.1, shall be obtained so that water from above cannot follow down the pipe to the lower floors or to the basement.

14.1.2 Rigid connections to steel tanks shall be made by means of a welded joint with approval by the authority having jurisdiction.

14.1.2.1 A rigid connection to a wood tank shall be made by means of a running nipple or by means of threaded flanges, one inside the tank and one outside the tank, bolted together through the wood with movable nuts outside.

14.1.3* Placing Tank in Service. All tank piping shall be installed immediately after completion of the tank and tower construction so that the tank can be filled and placed in service promptly.

14.1.4 The Contract. To ensure the installation of equipment, the contract shall specify that the finished work shall conform with this standard in all respects.

14.1.5 Precautions During Repairs. The authority having jurisdiction shall be notified well in advance when the tank is to be drained. The precautions required by 14.1.5.1 through 14.1.5.5 shall be observed.

14.1.5.1 Work shall be planned carefully to enable its completion in the shortest possible time.

14.1.5.2 Where available, a second, reasonably reliable water supply with constant suitable pressure and volume, usually public water, shall be connected to the system.

14.1.5.3 Where such a supply is not available, the fire pump shall be started and kept running to maintain suitable pressure in the system.

14.1.5.4 Additional portable fire extinguishers shall be placed in buildings where protection is impaired, and extra, well-instructed watch personnel shall be continuously on duty.

14.1.5.5 The members of the private fire brigade, as well as the public fire department, shall be familiar with conditions that affect repairs.

14.1.6* Heater Thermometer.

14.1.6.1 In the case of a gravity circulating heating system, an accurate thermometer shall be located as specified in 16.1.7.5.

14.1.6.2 Where a tank contains a radiator steam heater, an accurate socket thermometer shall be located as specified in 16.3.6.

Copyright National Fire Protection Association
Provided by IHS under license with NFPA
No reproduction or networking permitted without license from IHS
Not for Resale

14.1.7* Connections for Use Other Than for Fire Protection. The authority having jurisdiction shall be consulted before the tank is designed where water for other than fire protection purposes is to be drawn from the tank.

14.1.8* Water-Level Gauge. A water-level gauge of suitable design shall be provided. It shall be carefully installed, adjusted, and properly maintained.

14.1.8.1 Where an altitude gauge is used, it shall be at least 6 in. (152 mm) in diameter and shall be of noncorrodable construction.

14.1.8.2 The gauge shall be located to prevent it from freezing.

14.1.8.2.1 If necessary, it shall be located in a heated building or enclosure.

14.1.8.2.2 A blow-off cock shall be located between the gauge and the connection to the tank.

14.1.8.3 A listed, closed-circuit, high-water and low-water level electric alarm shall be permitted to be used in place of the gauge where acceptable to the authority having jurisdiction.

14.1.8.3.1 Provisions shall be made for the attachment of a calibrated test gauge.

14.1.8.4 For underground tanks, water-level monitoring shall be capable of being read and/or supervised above ground.

14.1.9* Frostproof Casing. The frostproof casing shall be maintained in good repair and shall be weathertight throughout.

14.1.10 Tanks with Large Risers.

14.1.10.1* Large steel-plate riser pipes of 3 ft (0.91 m) or more in diameter and without frostproof casing shall be acceptable where properly heated.

14.1.10.2 A manhole at least 12 in. × 16 in. (305 mm × 406 mm) shall be provided, and its lower edge shall be level with the discharge piping protection specified.

14.1.11 Discharge Piping Protection.

14.1.11.1 In the case of tanks with a large steel-plate riser [3 ft (0.91 m) diameter or larger], the inlet to the vertical discharge pipe that is located within the large riser shall be protected against the entry of foreign material.

14.1.11.2 The inlet can be done with an American National Standards Institute 125 lb/in. (8.6 bar) flanged tee, with the "run" of the reducing tee placed horizontally and with horizontal outlets one pipe size smaller than the discharge pipe, or with a fabricated plate extending at least 4 in. (102 mm) beyond the outside diameter of the pipe.

14.1.11.3 The plate shall be supported by at least three supporting bars 1½ in. × ¼ in. (38.1 mm × 6.4 mm), by ⅝ in. (15.9 mm) round rods, or by the equivalent, that elevate all portions of the plate at a height at least equal to the pipe diameter located above the discharge pipe inlet.

14.1.11.4 The attachment of the supports to the discharge pipe shall be made directly by welding or bolting or by means of a ¼ in. (6.4 mm) thick tightly fitting sectional clamp or collar that has ⅝ in. (15.9 mm) bolts in the outstanding legs of the clamps or collar.

14.1.11.5 A clearance of at least 6 in. (152 mm) shall be provided between all portions of the flanges of a tee or fabricated plate and the large riser plate.

14.1.12 Steel Pipe.

14.1.12.1 Steel pipe shall conform to ASTM A 53, Type E, Type F, Type S, Grade A, or Grade B, manufactured by the open-hearth, electric furnace, or basic oxygen process, or it shall conform to ASTM A 106, Grade A or Grade B.

14.1.12.2 Paragraphs 14.1.12.2.1 through 14.1.12.2.3 shall apply to steel pipe that is in contact with storage water.

14.1.12.2.1 Steel pipe smaller than 2 in. (50 mm) shall not be used.

14.1.12.2.2 Steel pipe of 2 in. to 5 in. (50 mm to 125 mm) to 5 in. (125 mm) shall be extra-strong weight.

14.1.12.2.3 All steel pipe 6 in. (150 mm) and larger shall be standard weight.

14.2 Discharge Pipe.

14.2.1 At Roofs and Floors. The intersection of discharge pipes, as well as the intersection of all other tank pipes, with roofs or with waterproof or concrete floors shall be watertight.

14.2.2 Size.

14.2.2.1 The conditions at each plant shall determine the size of the discharge pipe that is needed.

14.2.2.2 The size shall not be less than 6 in. (150 mm) for tanks up to and including a 25,000 gal (94.63 m^3) capacity and shall not be less than 8 in. (200 mm) for capacities of 30,000 gal to 100,000 gal (113.55 m^3 to 378.50 m^3) inclusive, or 10 in. (250 mm) for greater capacities.

14.2.2.3 Pipe that is smaller than specified in 14.2.2.2 [not less than 6 in. (150 mm)] shall be permitted in some cases where conditions are favorable and large flows of water are not needed.

14.2.2.3.1 Larger pipe shall be required where deemed necessary because of the location and arrangement of piping, height of buildings, or other conditions.

14.2.2.3.2 In all cases, approval of the pipe sizes shall be obtained from the authority having jurisdiction.

14.2.3 Pipe Material.

14.2.3.1 Underground Pipe Material. Piping shall be in accordance with NFPA 24.

14.2.3.2 Aboveground Pipe Material. Aboveground pipe material shall be in accordance with NFPA 13 and NFPA 20.

14.2.4 Braces.

14.2.4.1 Either the pipe or the large steel-plate riser pipe, or both, shall be braced laterally by rods of not less than ⅝ in. (15.9 mm) in diameter and shall be connected to the tower columns near each panel point.

14.2.4.2 The end connection of braces shall be by means of eyes or shackles; open hooks shall not be permitted.

14.2.5 Support.

14.2.5.1 The discharge pipe shall be supported at its base by a double-flanged base elbow that rests on a concrete or masonry foundation.

Copyright National Fire Protection Association
Provided by IHS under license with NFPA
No reproduction or networking permitted without license from IHS
Not for Resale

14.2.5.1.1 The base elbow of tanks with steel-plate risers, of suction tanks, or of standpipes shall have bell ends.

14.2.5.2 The joint at the connection of yard piping to the base elbow shall be strapped, or the base elbow shall be backed up by concrete.

14.2.5.2.1 If the discharge pipe is offset inside a building, it shall be supported at the offset by suitable hangers that extend from the roof or floors, in which case the base elbow might not be required.

14.2.5.2.2 Large steel riser pipes shall be supported on a reinforced concrete pier that is designed to support the load specified in Section 13.3.

14.2.5.2.3 Concrete grout shall be provided beneath the large riser to furnish uniform bearing when the tank is empty.

14.2.6 Offsets.

14.2.6.1 The discharge pipe outside of buildings shall extend vertically to the base elbow or building roof without offsets where possible.

14.2.6.2 If an offset is unavoidable, it shall be supported at the offsetting elbows and at intermediate points not over 12 ft (3.7 m) apart, and it also shall be rigidly braced laterally.

14.2.6.3 The supports shall consist of steel beams that run across the tower struts or of steel rods from the tower columns arranged so that there is no slipping or loosening.

14.2.7 Expansion Joint.

14.2.7.1 Tanks with flanged or welded pipe risers [12 in. (250 mm) and under] shall have a listed expansion joint on the fire-service discharge pipe where the tank is on a tower that elevates the bottom 30 ft (9.1 m) or more above the base elbow or any offset in the discharge pipe.

14.2.7.2 Expansion joints shall be built to conform to Section 14.3.

14.2.8 Rigid Connection.

14.2.8.1 When the distance between the tank bottom and the base elbow or supporting hanger is less than 30 ft (9.1 m), the discharge pipe shall be connected by an expansion joint that is built to conform to Section 14.3 or shall be rigidly connected in accordance with 14.1.2.

14.2.8.2 The top of the pipe (or the fitting attached to the top) shall extend above the inside of the tank bottom or base of a steel-plate riser to form a settling basin.

14.2.8.2.1 The top of a steel-plate riser shall be connected rigidly to the suspended bottom of the tank.

14.2.8.2.2 The discharge pipe from a steel plate riser of a tank that is located over a building shall be connected rigidly to the base of the larger riser.

14.2.8.2.3 A rigid flanged connection or welded joint shall be permitted to be used between the discharge pipe and the bottom of a suction tank, a standpipe, or the base of a steel-plate riser of a tank that is located on an independent tower where special approval is obtained from the authority having jurisdiction.

14.2.8.2.4 When the base of a steel-plate riser is in its final position on a concrete support, it shall be grouted to obtain complete bearing.

14.2.9 Swing Joints. Where the vertical length of a discharge pipe that is located below an offset, either inside or outside a building, is 30 ft (9.1 m) or more, a four-elbow swing joint that is formed, in part, by the offset shall be provided in the pipe.

14.2.10 Settling Basin.

14.2.10.1 The depth of the settling basin in the tank bottom shall be 4 in. (102 mm) for a flat-bottom tank and 18 in. (457 mm) for a suspended-bottom tank.

14.2.10.2 The settling basin at the base of a large steel-plate riser shall be at least 3 ft (0.91 m) deep.

14.2.11 Check Valve.

14.2.11.1 A listed check valve shall be placed horizontally in the discharge pipe and shall be located in a pit under the tank where the tank is located on an independent tower.

14.2.11.2 Where the tank is located over a building, the check valve shall ordinarily be placed in a pit, preferably outside the building.

14.2.11.3 Where yard room is not available, the check valve shall be located on the ground floor or in the basement of a building, provided it is protected against breakage.

14.2.12 Controlling Valves.

14.2.12.1 A listed gate valve shall be placed in the discharge pipe on the yard side of the check valve between the check valve and any connection of the tank discharge to other piping.

14.2.12.1.1 The listed gate valve shall be permitted to be equipped with an indicating post.

14.2.12.2 Where yard room for an indicator post is not available, a listed outside screw and yoke (OS&Y) gate valve that is of similar arrangement, but that is located inside the valve pit or room, shall be used.

14.2.12.3 A listed indicating control valve shall be placed in the discharge pipe on the tank side of the check valve.

14.2.12.3.1 Where the tank is on an independent tower, the valve shall be placed in the pit with the check valve, preferably on the yard side of the base elbow.

14.2.12.3.2 Where a tank is used as a suction source for a fire pump, the listed indicating control valve shall be of the OS&Y type.

14.2.12.3.3 Where the tank is located over a building, the valve shall be placed under the roof near the point where the discharge pipe enters the building.

14.2.12.3.4 For suction tanks, the valve shall be as close to the tank as possible.

14.2.13 Anti-Vortex Plate Assembly.

14.2.13.1 Where a tank is used as the suction source for a fire pump, the discharge outlet shall be equipped with an assembly that controls vortex flow.

14.2.13.2* The assembly shall consist of a horizontal steel plate that is at least twice the diameter of the outlet on an elbow fitting, where required, mounted at the outlet a distance above the bottom of the tank equal to one-half the diameter of the discharge pipe.

14.2.13.3* The minimum distance above the bottom of the tank shall be 6 in. (152 mm).

Copyright National Fire Protection Association
Provided by IHS under license with NFPA
No reproduction or networking permitted without license from IHS
Not for Resale

14.3 Expansion Joint.

14.3.1 Connection to Tank.

14.3.1.1 A listed expansion joint shall be used where required by 14.2.7 and 14.2.8.1.

14.3.1.2 The expansion joint shall be placed immediately above the foot elbow or shall be connected to the tank bottom using welding for a steel tank and bolts or a special screw fitting for a wood tank.

14.3.1.3 The movable nuts on bolts shall be located on the outside of the tank.

14.3.2 General Design.

14.3.2.1 The design shall be such that the joint operates reliably over years without attention and shall be of adequate strength to resist the stresses and corrosion to which it is subjected.

14.3.2.2 One or both of the two parts that slide, one on the other, shall be of brass or other noncorrodible metal of ample strength and resistance to wear.

14.3.3 Clearances. A minimum 1/16 in. (1.6 mm) clearance shall be provided around all movable parts to prevent binding, and at least ½ in. (12.7 mm) shall be provided between the cast-iron body and an iron or steel slip-tube.

14.3.4 Body.

14.3.4.1 The body shall be of steel or cast-iron and, if connected to the tank bottom, shall provide for a settling basin extension of proper length.

14.3.4.2 Provisions shall be made for a packing space of adequate size.

14.3.5 Gland. The adjustable gland shall be of brass or iron and shall be connected to the body casting, preferably with four standard bolts of at least 5/8 in. (15.9 mm) and of sufficient length to allow full adjustment.

14.3.6 Slip-Tube.

14.3.6.1 The sliding tube at the top of the discharge pipe shall be of brass or iron.

14.3.6.2 If the gland is iron, the slip-tube shall have a triple-plated brass outer surface.

14.3.6.3 If the gland is brass, the slip-tube shall be of cast-iron or steel, and the top of the packing space shall be formed with brass and a clearance of at least ½ in. (12.7 mm) provided at all points between the cast-iron body and the slip-tube.

14.3.6.4 The upper part of the slip-tube shall be machined over a length such that the top of the gland can be dropped to 6 in. (152 mm) below the bottom of the body casting so as to enable repacking.

14.3.6.5 The top of the slip-tube shall be located approximately 5 in. (127 mm) below the top of 4 in. (102 mm) settling-basin extensions and 12 in. (305 mm) below the top of 18 in. (457 mm) settling-basin extensions.

14.3.7 Packing.

14.3.7.1 The packing shall consist of asbestos wicking that is saturated with rape oil and graphite or an equally suitable material.

14.3.7.2 Packing at least 2 in. (51 mm) deep and ½ in. (12.7 mm) thick shall be provided in the packing space.

14.3.8 Connections for Use Other Than for Fire Protection.

14.3.8.1 Connections for a use other than fire protection shall not be made.

14.3.8.2 Where unavoidable connections for other than fire protection shall be permitted, connections shall be rigidly made to the tank bottom, and a standard expansion joint, where needed, shall be provided in each such pipe that is located below, and entirely independent of, the tank.

14.4 Filling.

14.4.1 A permanent pipe connected to a water supply shall be provided to fill the tank.

14.4.2 The means to fill the tank shall be sized to fill the tank in a maximum time of 8 hours.

14.4.3 The tank shall be kept filled, and the water level shall never be more than 4 in. (102 mm) below the designated fire service level.

14.4.4 The filling bypass shall be kept closed when not in use.

14.4.5 Bypass Around Check Valve.

14.4.5.1 Where the tank is to be filled from the fire protection system under city or fire-pump pressure, the filling pipe shall be a bypass around the check.

14.4.5.2 The bypass shall be connected into tapped bosses on the check valve or into the discharge pipe between the check valve and all other valves.

14.4.5.3 The bypass shall be sized to fill the tank in accordance with 13.4.2 but shall not be smaller than 2 in. (50 mm).

14.4.5.4 A listed indicating control valve shall be placed in the bypass and shall be kept closed except when the tank is being filled.

14.4.6 Filling Pumps.

14.4.6.1 When the tank is to be filled by a filling pump, the pump and connections shall be of such size that the tank can be filled in accordance with 13.4.2.

14.4.6.2 The filling pipe shall be of at least 2 in. (50 mm) and, except as noted in 14.4.7, shall be connected directly into the tank discharge pipe, in which case a listed indicating control valve and a check valve shall be placed in the filling pipe near the tank discharge pipe, with the check valve located on the pump side of the listed indicating valve.

14.4.6.3 The filling pump suction pipe shall not be connected to a fire service main that is supplied from the tank. The filling valve shall be open only when the tank is being filled.

14.4.7 Where a separate fill pipe is used, automatic filling shall be permitted.

14.4.8 Filling from Drinking Water Supply. Where the water in the fire protection system is not suitable for drinking purposes and the tank is filled from a potable water supply, the filling pipe shall be installed in accordance with the regulations of the local health authority.

14.4.9 Filling Pipe at Roofs and Floors. The intersection of a separate filling pipe with a roof or a waterproof or concrete floor shall be watertight.

Copyright National Fire Protection Association
Provided by IHS under license with NFPA
No reproduction or networking permitted without license from IHS
Not for Resale

14.4.10 Suction Tanks.

14.4.10.1 Pipes for the automatic filling of suction tanks shall discharge into the opposite half of the tanks from the pump suction pipe.

14.4.10.2 Where an over-the-top fill line is used, the outlet shall be directed downward.

14.5 Overflow.

14.5.1 Size. The overflow pipe shall be of adequate capacity for the operating conditions and shall be of not less than 3 in. (75 mm) throughout.

14.5.2 Inlet.

14.5.2.1 The inlet of the overflow pipe shall be located at the top capacity line or high waterline.

14.5.2.2 The inlet also shall be located at least 1 in. (25 mm) below the bottom of the flat cover joists in a wood tank, but shall never be closer than 2 in. (50 mm) to the top of the tank.

14.5.2.3 Unless the maximum fill capacity is known and the overflow capacity is calculated to be at least equal to the fill capacity, the overflow pipe shall be at least one pipe size larger than the fill line and shall be equipped with an inlet such as a concentric reducer, or equivalent, that is at least 2 in. (50 mm) larger in diameter.

14.5.2.4 The inlet shall be arranged so that the flow of water is not retarded by any obstruction.

14.5.2.5 An overflow pipe that is cut with the opening to fit the roof shall be used on a steel tank, provided a suitable horizontal suction plate and vortex breaker are used to ensure full capacity flow for the overflow.

14.5.3* Stub Pipe.

14.5.3.1 Where dripping water or a small accumulation of ice is not objectionable, the overflow shall be permitted, at the discretion of the owner, to pass through the side of the tank near the top.

14.5.3.2 The pipe shall be extended with a slight downward pitch to discharge beyond the tank or balcony and away from the ladders and shall be adequately supported.

14.5.3.3 Overflows for pedestal tanks shall be extended to ground level within the access tube and pedestal.

14.5.4 Inside Pipe.

14.5.4.1 Where a stub pipe is undesirable, the overflow pipe shall extend down through the tank bottom and inside the frostproof casing or steel-plate riser and shall discharge through the casing near the ground or roof level.

14.5.4.2* The section of the pipe inside the tank shall be of brass, flanged cast-iron, or steel.

14.5.4.2.1 Inside overflow pipes shall be braced by substantial clamps to tank and riser plates at points not over 25 ft (7.6 m) apart.

14.5.4.2.2 The discharge shall be visible, and the pipe shall be pitched to drain.

14.5.4.2.3 Where the discharge is exposed, the exposed length shall not exceed 4 ft (1.2 m) and shall avoid the entrance to the valve pit or house.

14.6 Clean-Out and Drain.

14.6.1 Handhole. A standard handhole, with a minimum dimension of 3 in. (76 mm), or a manhole shall be provided in the saucer plate outside of the frostproof casing and at the bottom of an elevated steel tank with a suspended bottom unless the tank has a large riser pipe 3 ft (0.91 m) or more in diameter.

14.6.2 Manholes.

14.6.2.1 Two manholes shall be provided in the first ring of the steel suction tank shell at locations to be designated by the purchaser.

14.6.2.1.1 The design of the manholes for steel tanks shall be in accordance with AWWA D100 for welded steel tanks, and AWWA D103 for bolted steel tanks.

14.6.3 For Elevated Flat-Bottom Tanks.

14.6.3.1 Where elevated, at least a 2 in. (50 mm) pipe clean-out also shall be provided outside of the frostproof casing in the bottom of a wood tank or a flat-bottom steel tank.

14.6.3.2 The clean-out connection for wood tanks shall consist of a special screw fitting with a gasket or a pair of 2 in. (50 mm) pipe flanges.

14.6.3.3 The connection for steel tanks shall consist of an extra-heavy coupling welded to the bottom plate.

14.6.3.4 The coupling shall be welded to both sides of the tank plates.

14.6.3.5 A piece of 2 in. (50 mm) brass pipe about 5 in. (127 mm) long that is capped at the top with a brass cap shall be screwed into the inner fitting or flange.

14.6.3.6* The clean-out shall be watertight.

14.6.4 Riser Drain.

14.6.4.1 A drain pipe of at least 2 in. (50 mm) that is fitted with a controlling valve and a ½ in. (12 mm) drip valve shall be connected into the tank discharge pipe near its base and, where possible, on the tank side of all valves.

14.6.4.2 Where the outlet is an open end outlet, it shall be fitted with a 2½ in. (65 mm) hose connection unless it discharges into a funnel or cistern piped to a sewer.

14.6.4.3 Where the drain is piped directly to a sewer, a sight glass or a ¾ in. (19.1 mm) test valve on the underside of the pipe shall be provided.

14.6.4.4 Where the drain pipe is to be used for a hose stream, the controlling valve shall be a listed gate valve or angle valve.

14.6.4.5* Where a circulation-tank heater is located near the base of the tank riser, the drain pipe shall, if possible, be connected from the cold-water return pipe between the cold-water valve and the heater in order to permit flushing water from the tank through the hot-water pipe heater and drain for clean-out purposes.

14.7 Connections for Other Than Fire Protection.

14.7.1* Dual-Service Tanks. Where dual service is necessary, an adequate supply of water shall be constantly and automatically reserved in the tank for fire protection purposes.

Copyright National Fire Protection Association
Provided by IHS under license with NFPA
No reproduction or networking permitted without license from IHS
Not for Resale

14.7.2 Pipe for Other Than Fire Protection Purposes.

14.7.2.1 Pipe used for other than fire protection purposes shall be entirely separate from fire-service pipes and shall extend to an elevation inside the tank below which an adequate quantity of water is constantly available for fire protection.

14.7.2.2 Pipe inside the tank that is used for other than fire protection purposes shall be brass.

14.7.2.2.1 Steel pipe shall be permitted to be used where the pipe is larger than 3 in. (75 mm), or cast-iron shall be permitted where the pipe is 6 in. (150 mm) or larger.

14.7.2.3 Pipe inside the tank shall be braced near the top and at points not over 25 ft (7.6 m) apart.

14.7.2.4* Where an expansion joint exists, it shall be of the standard type, shall be located below the tank, and shall be without connection to the tank plates.

14.7.3* At Roofs and Floors. Where a pipe used for other than fire protection purposes intersects with a building roof or a waterproof or concrete floor, the intersection shall be watertight.

14.8* Sensors.

14.8.1 Provisions shall be made for the installation of sensors in accordance with *NFPA 72* for two critical water temperatures and two critical water levels.

14.8.2 Pressure Tanks. In addition to the requirements of 14.8.1, pressure tanks shall be provided with connections for the installation of high- and low-water pressure supervisory signals in accordance with *NFPA 72*.

Chapter 15 Valve Enclosures and Frost Protection

15.1 Valve Pit or House and Heater House.

15.1.1 General.

15.1.1.1 Where the tank is on an independent tower, a valve pit or house shall be built at the base of the discharge pipe to house the valves, tank heater, and other fittings.

15.1.1.2 Where a large valve pit is provided below grade, it shall contain all equipment, including the check valve in the horizontal run.

15.1.1.3 Where a house that is located above grade with no large pit beneath it is used, it shall be necessary to place the OS&Y gate valve in the vertical part of the tank discharge pipe and to construct a small brick or concrete pit or well to contain the check valve in the horizontal pipe below the frost line.

15.1.2* Materials.

15.1.2.1 Where the valve pit is located below grade, it shall be built of portland cement concrete with a clean aggregate.

15.1.2.2 Reinforced concrete shall be a 1:2:4 mixture.

15.1.2.3 Where low stresses allow its use, plain concrete shall be a 1:3:5 mixture.

15.1.2.4 A valve house that is located above grade shall be constructed of concrete, brick, cement plaster on metal lath, or other noncombustible material with suitable heat-insulating properties. *(See Table 15.1.2.4.)*

15.1.2.5 Materials shall conform to ASTM C 578, Grade 2, Type II.

15.1.2.5.1 Since nonburning polystyrene does not exist, care shall be taken to specify this material for frostproofing where the threat of direct exposure to flame exists.

15.1.2.6 Materials shall conform to ASTM C 591, Grade 2, Type II.

15.1.2.6.1 Since nonburning polyurethane does not exist, care shall be taken to specify this material for frostproofing where the threat of direct exposure to flame exists.

15.1.3 Dimensions.

15.1.3.1 A valve pit or house shall be of sufficient size to provide a clearance of 12 in. to 18 in. (305 mm to 457 mm) around all contained equipment.

15.1.3.2 A valve pit shall extend at least 6 in. (152 mm) above grade and far enough below grade to allow placement of the base elbow below the frost line and shall be at such an elevation that connection to the system can be conveniently made.

15.1.3.3* A pit shall be planned in advance for the equipment.

15.1.3.4 A valve house that contains only the OS&Y gate in the discharge pipe and the heater can usually be made smaller.

Table 15.1.2.4 Frostproofing Materials and Required Minimum Thickness

Type of Insulation	Low One-Day Mean Temperature [°C (°F)]																	
	–1.11° (+30°)	–3.89° (+25°)	–6.67° (+20°)	–9.44° (+15°)	–12.22° (+10°)	–15° (+5°)	–17.78° (0°)	–20.56° (–5°)	–23.33° (–10°)	–26.11° (–15°)	–28.89° (–20°)	–31.67° (–25°)	–34.44° (–30°)	–37.22° (–35°)	–40° (–40°)	–42.78° (–45°)	–45.56° (–50°)	–48.33° (–55°)
Insulated metal frostproof casing	None	3 in. (76.2 mm) thick fiberglass in metal shield																
Foam glass		2 in. (50.8 mm) thick					3 in. (76.2 mm) thick							4 in. (101.6 mm) thick				
Fiberglass [min. 48.1 kg/m^3 (3 lb/ft^3)]		1 in. (25.4 mm) thick			1½ in. (38.1 mm) thick					2 in. (50.8 mm) thick				2½ in. (63.5 mm) thick				
Polystyrene 15.1.2.5		1 in. (25.4 mm) thick			1½ in. (38.1 mm) thick					2 in. (50.8 mm) thick				2½ in. (63.5 mm) thick				
Polyurethane 15.1.2.6		1 in. (25.4 mm) thick								2 in. (50.8 mm) thick								

Copyright National Fire Protection Association
Provided by IHS under license with NFPA
No reproduction or networking permitted without license from IHS
Not for Resale

15.1.4 Design of Valve Pit.

15.1.4.1 All parts of the valve pit and the soil beneath it shall resist all loads, including the frost casing or large steel riser and contained water.

15.1.4.1.1 The valve pit shall require a reinforced 1:2:4 concrete mixture for the roof.

15.1.4.1.2 The walls and floor of the valve pit also shall be a reinforced 1:2:4 mixture where subjected to bending stresses from groundwater pressure or other loads.

15.1.4.1.3 The walls and floor of the valve pit shall be a plain 1:3:5 concrete mixture, not less than 8 in. (203 mm) thick.

15.1.4.2 Loads.

15.1.4.2.1 The load to be considered when designing the pier and its bearing that support a large steel-plate riser, where the hemispherical or ellipsoidal shape is continuous to the shell of the large riser without a flat horizontal diaphragm plate, shall be the weight of the water column from the pier to the tank bottom plus the weight of a cylinder of water 4 ft (1.2 m) greater in diameter than that of the large riser.

15.1.4.2.2 The load shall extend from the bottom to the top of the tank.

15.1.4.2.3 Where a hemispherical or ellipsoidal bottom is rigidly attached to the top of a larger riser by a flat horizontal diaphragm plate, the weight that is considered to act on the pier shall be the weight of the water column from the pier to the tank bottom plus the weight of a cylinder of water whose radius equals the radius of the riser at the tank bottom plus one-half the distance from the edge of the riser to where the flat horizontal diaphragm plate connects to the hemispherical or ellipsoidal bottom plate, and the cylinder of water shall extend from the bottom to the top of the tank.

15.1.4.2.4 The pier shall adjoin a pit that contains the usual valves and accessories.

15.1.4.2.5 A slip joint shall be provided between the pier and the valve pit where the soil is incapable of sustaining a load of 2 tons/ft^2 (19,548 kg/m^2) without negligible settlement.

15.1.5 Pit Manhole.

15.1.5.1 A standard round manhole with a cover at least 24 in. (610 mm) in diameter, a square metal manhole with a substantially hinged cover at least 20 in. (508 mm) on a side, or a raised hatch of equivalent size with a cover built of two-ply matched boards with tar paper between the boards shall be provided in the roof of the valve pit.

15.1.5.2 Where there is no heater in the pit, the manhole shall have a properly fitted inside cover of 2 in. (51 mm) plank, or its equivalent, that is located at least 4 in. (102 mm) below the outer cover.

15.1.6 Pit Ladder. A rigidly secured steel ladder shall extend from the manhole to the floor.

15.1.7 Waterproofing Pit.

15.1.7.1 Where the pit is located below drainage level, the outside surface shall be thoroughly waterproofed.

15.1.7.2 Waterproofing shall be achieved either by painting the surface with asphalt and then covering it with at least two layers of felt and asphalt alternately, with the felt lapped 18 in. (457 mm), or by other methods acceptable to the authority having jurisdiction.

15.1.8* Pit Drain. A sump and drain shall be provided wherever a sewer is available or where soil conditions make the arrangement possible.

15.1.9 Heater House.

15.1.9.1 A heater house that is located above grade shall be substantial, and the roof shall be strong enough to support the frostproof casing, where provided, and other loads without excessive deflection.

15.1.9.1.1 A tight-fitting double door of a size for the admittance of persons or equipment shall be provided.

15.1.9.2 Where the house contains a heater that burns oil or a gas that is heavier than air, and is located over a valve pit that is located below grade, the entrance to the pit shall be outside the heater house.

15.1.9.2.1 The portion of the floor of the heater house that is over the pit shall be of continuous concrete and shall be tightly caulked around all pipes.

15.1.9.3 Where the house contains a fuel-burning heater, louvers that are located above the maximum snow level or a vent shall be provided to furnish fresh air for the combustion of fuel, in addition to providing a vent to exhaust the products of combustion from the house.

15.1.10 Heating Valve House or Pit and Heater House. A valve or heater house that is located above grade, as well as the valve pit, shall be heated to maintain a temperature of at least 40°F (4.4°C) during the most severe weather.

15.2 Frostproof Casing.

15.2.1 General. A listed frostproof casing shall be placed around all exposed tank piping in localities where the lowest mean atmospheric temperature for one day, as shown by Figure 16.1.4, is 20°F (–6.7°C) or lower.

15.2.1.1 Tank piping that is subjected to temperatures below freezing within unheated buildings, or dry risers of elevated tanks, also shall be protected.

15.2.1.2 Combustible frostproof casings that are subjected to serious fire exposure shall be protected by at least 1 in. (25.4 mm) of cement plaster on metal lath.

15.2.1.3 The casing or discharge pipe shall be braced as specified in 14.2.4, and bracing shall be provided between the frostproof casing and the discharge pipe.

15.2.1.4 Noncombustible construction or its equivalent, as shown in Figure B.1(r), shall be used throughout.

15.2.2 Wood.

15.2.2.1 Where special permission is obtained from the authority having jurisdiction, frostproof casings shall be permitted to be of wood. *(See A.16.1.2.)*

15.2.2.1.1 All lumber used for frostproof casings shall be sound and free from large or loose knots.

15.2.2.1.2 Sheathing shall be matched stock, dressed from a nominal thickness of at least 1 in. (25.4 mm) to a finished thickness of not less than ⅝ in. (15.9 mm).

Copyright National Fire Protection Association
Provided by IHS under license with NFPA
No reproduction or networking permitted without license from IHS
Not for Resale

15.2.2.1.3 One thickness of heavy nonabsorbent or saturated building paper shall be wrapped around all except the outer courses of sheathing.

15.2.2.1.4 Air spaces shall be neither less than 1 in. (25.4 mm) nor more than 2 in. (51 mm).

15.2.2.1.5 Horizontal nailing strips that are spaced not more than 4 ft (1.2 m) apart shall be provided.

15.2.2.2 Effective firestops shall be provided in all air spaces at approximately 6 ft (1.8 m) and 10 ft (3.0 m) above the base of the casing.

15.2.2.2.1 For prefabricated casings, the lower firestop shall be located at the base of the casing.

15.2.2.2.2 Where the casing contains only water pipes, noncombustible insulating material at least 4 in. (102 mm) thick and supported on 2 in. (51 mm) planks, or the equivalent, shall be used for the firestops.

15.2.2.2.3 The insulating material shall be packed tightly in any spaces between the planks and pipes.

15.2.2.2.4 Where the casing contains a steam pipe, a listed noncombustible material shall be used instead of the 2 in. (51 mm) planks.

15.2.2.2.5 After cleaning the pipes with wire brushes and scrapers, the pipes shall be protected against corrosion at the firestops by the liberal application of red lead paint with litharge added. *(See 5.7.10.)*

15.2.2.2.6 At least 1½ in. × 1/16 in. (38.1 mm × 1.6 mm) galvanized iron flats or ⅜ in. (9.5 mm) round hoops shall be placed around circular casings over each nailing strip.

15.2.2.2.7 The bracing between the frostproof casing and the discharge pipe shall be spaced at intervals of not over 4 ft (1.2 m).

15.2.2.2.7.1 Prefabricated casing shall be braced to the discharge pipe at the ends of the sections at intervals of not over 16 ft (4.9 m).

15.2.3 Top.

15.2.3.1 Where the casing is of wood or metal, an enlarged section shall be provided directly under the tank bottom and shall fit over the main portion of the casing with a slip joint lapping of at least 6 in. (152 mm) to provide for the expansion or settlement of the tower.

15.2.3.2 The enlarged section shall have the same insulating qualities as the main casing and shall be tightly and securely fitted to the tank bottom.

15.2.3.3 A tank with a hemispherical or other suspended bottom shall be built in the shop.

15.2.4 Bottom.

15.2.4.1 The casing shall be supported at the bottom by the roof of the valve pit or building, using beams if necessary.

15.2.4.2 The joint around the bottom shall be watertight to prevent leakage from outside.

15.2.4.3 Where the tank is located over a building, the joint between the roof and pipes inside the casing also shall be watertight to keep water from draining into the building if a pipe is broken. *(See 14.1.1.)*

15.2.4.4 The lower end of the casing shall be protected from the absorption of moisture.

15.2.5 Paint.

15.2.5.1 Unless the lumber that is used in a wood casing has been suitably treated with a preservative, all exposed parts shall be given at least two coats of a good grade of paint.

15.2.5.2 Where a metal casing is used, all surfaces shall be given two coats of paint as specified in 5.7.10 and 5.7.11.

Chapter 16 Tank Heating

16.1* General.

16.1.1 Tanks that are subjected to freezing shall be heated.

16.1.2* The heating system shall be of such capacity that the temperature of the coldest water in the tank or riser, or both, is maintained at or above 42°F (5.6°C) during the coldest weather.

16.1.2.1* The coldest weather temperature that is used to determine the need for heating shall be based on the lowest mean temperature for one day, as shown in Figure 16.1.4.

16.1.2.2* A low water temperature alarm, set at 40°F (4.4°C), shall be provided.

16.1.3* The method of heating that is used shall conform to 16.2.1, 16.2.2, or 16.2.3, based on the type of tank and its geographical location.

16.1.4* The method of heating that is used shall employ one of the heaters described in 16.3.1 through 16.3.7, and shall have a capacity in kilowatts (British thermal units) per hour, in accordance with Figure 16.1.4 and Table 16.1.4(a) through Table 16.1.4(h), as appropriate, for the determination of heater capacity.

16.1.4.1 The heater shall be plainly marked with a plate or cast lettering that indicates the kilowatt (British thermal unit) per hour input, type of heater, and the manufacturer's name.

16.1.4.2 The allowable working pressure of the heater shall not be less than the maximum filling pressure sustained when the tank is being filled.

16.1.5* Location.

16.1.5.1 The heater shall be located in a valve pit, a special heater house, or a building at or near the base of the tank structure.

16.1.5.2 Where the tank is located over a building, the heater shall be located in the top story.

16.1.5.3 Where placed inside combustible frostproof casings, heaters shall not be in contact with any combustible material.

16.1.6 Heat Insulation.

16.1.6.1 All heaters shall be insulated to prevent excessive heat losses.

16.1.6.2 Where the tank heater is the only source of heat in a valve pit or other heater room, a length of heater or steam pipe shall be left uninsulated to maintain the temperature of the air above freezing.

Copyright National Fire Protection Association
Provided by IHS under license with NFPA
No reproduction or networking permitted without license from IHS
Not for Resale

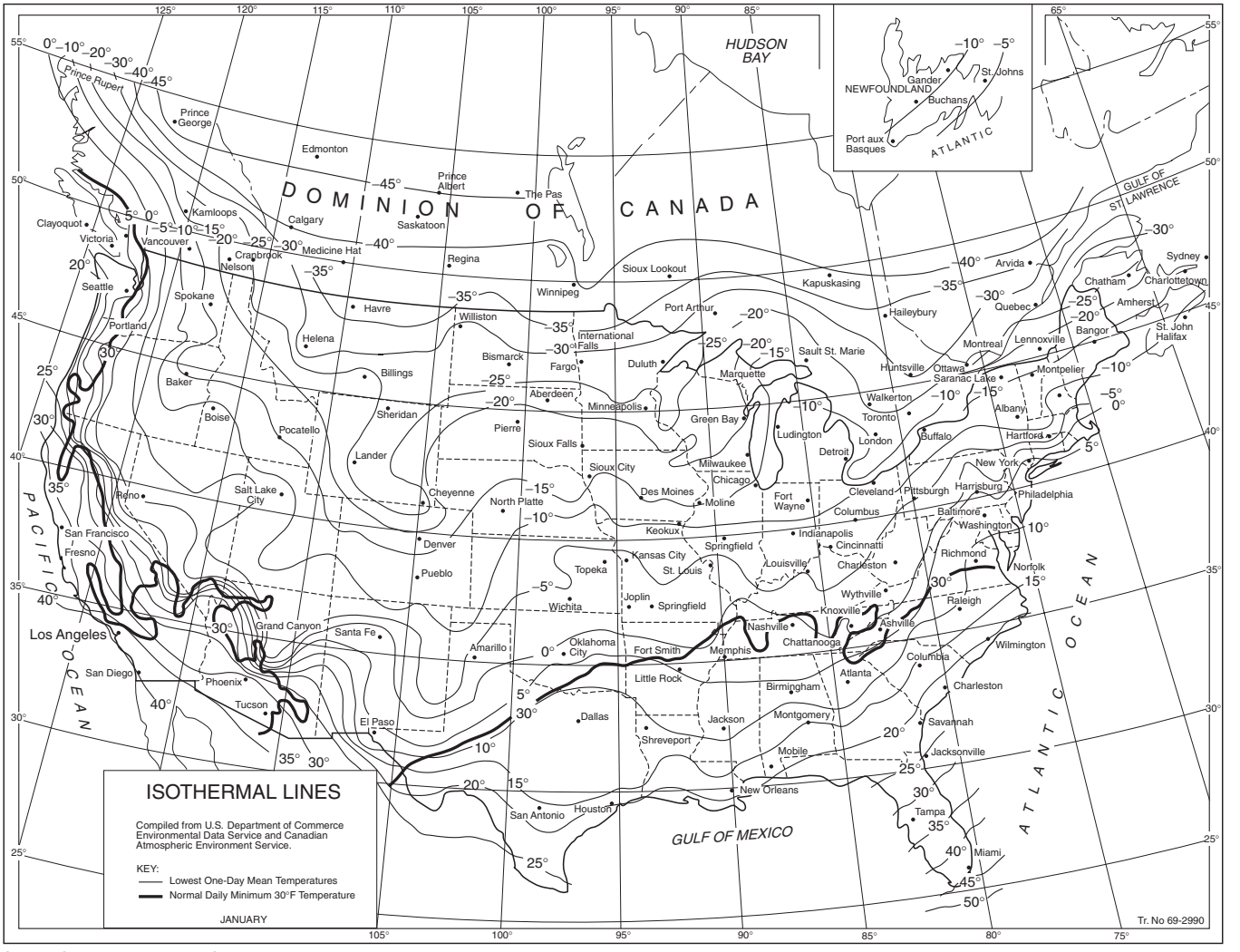

Source: Compiled from United States Weather Bureau records.
For SI units, °C = ⅝ (°F −32); 1 mi = 1.609 km.

FIGURE 16.1.4 Isothermal Lines — Lowest One-Day Mean Temperature (°F).

16.1.7* Heater Water-Circulating Pipes.

16.1.7.1 The size of heater water-circulating pipes for wood and steel tanks shall be not less than 2 in. (50 mm) and shall be not less than shown in Table 16.1.7.1.

16.1.7.2 The installation of the hot- and cold-water-circulating pipes shall be in accordance with 16.1.7.4 and 16.1.7.5.

16.1.7.3 Where the circulating pipes pass through the roof or waterproofed or concrete floors, the intersections shall be made watertight. *(See 14.1.1.)*

16.1.7.4 Hot-Water Pipe.

16.1.7.4.1 Copper tubing, steel conforming to Section 5.2, or brass (85 percent copper) pipe shall be used throughout.

16.1.7.4.2 Where the tank is elevated, the hot-water pipe shall be placed near the discharge pipe inside the frostproof casing.

16.1.7.4.3 The pipe shall pitch upward at all points and shall have a four-elbow swing joint or a supported brass expansion joint that is located either just above the heater or just below the tank bottom.

16.1.7.4.4 The hot water shall discharge inside the tank through a tee fitting of the nominal pipe size that is located at about one-third of the height of the tank.

16.1.7.4.5 The pipe shall be braced inside the tank and also at points not over 25 ft (7.6 m) apart for its entire length, providing enough play to allow for expansion.

16.1.7.4.6 A listed indicating valve of the nominal pipe size shall be placed in the pipe near the heater.

16.1.7.5 Cold-Water Pipe.

16.1.7.5.1 The cold-water return pipe shall be connected to the discharge pipe or tank side at a point that ensures circulation throughout the entire portion of the discharge pipe that is subject to freezing.

Copyright National Fire Protection Association
Provided by IHS under license with NFPA
No reproduction or networking permitted without license from IHS
Not for Resale

Table 16.1.4(a) Thousands of British Thermal Units Lost per Hour from Uninsulated Elevated Steel Tanks Based on Minimum Water Temperature of 42°F (5.6°C) and a Wind Velocity of 12 mph (19.3 km/hr)

Atmospheric Temperature (°F)	Heat (Btu/hr) Loss per Square Foot Tank Radiating Surface	Tank Capacities (thousands of U.S. gallons) 25	30	40	50	75	100	150	200	250	Add Btu per Lineal Foot Uninsulated Steel Riser 3 ft diam	4 ft diam
		Square Feet of Tank Surface* 1210	1325	1550	1800	2370	2845	3705	4470	5240		
		Btu Lost per Hour (thousands)										
35	32.3	40	43	51	59	77	92	120	145	168	50	69
30	46.1	56	62	72	83	110	132	171	207	242	144	192
25	61.5	75	82	96	111	146	175	228	275	323	255	340
20	77.2	94	103	120	139	183	220	287	346	405	380	506
15	93.6	114	125	146	169	222	267	347	419	491	519	692
10	110.9	135	147	172	200	263	316	411	496	582	670	893
5	128.9	156	171	200	233	306	367	478	577	676	820	1092
0	148.5	180	197	231	268	352	423	551	664	779	982	1309
–5	168.7	205	224	262	304	400	480	626	755	884	1152	1536
–10	190.7	231	253	296	344	452	543	707	853	1000	1329	1771
–15	213.2	258	283	331	384	506	607	790	954	1118	1515	2020
–20	236.8	287	314	368	427	562	674	878	1059	1241	1718	2291
–25	262.3	318	348	407	473	622	747	972	1173	1375	1926	2568
–30	288.1	349	382	447	519	683	820	1068	1288	1510	2145	2860
–35	316.0	383	419	490	569	749	900	1171	1413	1656	2381	3174
–40	344.0	417	456	534	620	816	979	1275	1538	1803	2620	3494
–50	405.6	491	538	629	731	962	1154	1503	1814	2126	3139	4186
–60	470.8	570	624	730	848	1116	1340	1745	2105	2467	3702	4936

Notes:

1. For SI units, 1 ft = 0.3048 m; 1 ft^2 = 0.0929 m^2; 1 Btu/hr = 0.293 W; 1 Btu/ft^2 = 11.356 kJ/m^2; °C = ⅝ (°F –32); 1000 gal = 3.785 m^3.

2. Heat loss for a given capacity with a different tank radiating surface from that shown in the table shall be obtained by multiplying the radiating surface by the tabulated heat loss per square foot for the atmospheric temperature involved. The minimum radiation surface area shall be the wetted tank steel surface area plus the top water surface area. For tanks with large steel-plate risers, the heat loss from the riser shall be added to that from the tank. The riser heat loss per linear foot shall be as tabulated above.

3. See Table 16.1.4(b) for wood tanks and Table 16.1.4(c) for steel standpipes. To determine the capacity of heater needed, use the minimum mean atmospheric temperature for one day from Figure 16.1.4, and note the corresponding heat loss from the table.

* These values represent square feet of tank radiating surfaces used for each capacity to compute the heat loss values and are typical for tanks with D/4 ellipsoidal roofs and bottoms.

Table 16.1.4(b) Thousands of British Thermal Units Lost per Hour from Elevated Wood Tanks Based on Minimum Water Temperature of 42°F (5.6°C) and a Wind Velocity of 12 mph (19.3 km/hr)

Atmospheric Temperature (°F)	Tank Capacities (thousands of U.S. gallons) 10	15	20	25	30	40	50	75	100
35	8	10	11	13	14	19	21	28	33
30	11	14	16	19	21	27	31	40	49
25	15	20	21	25	28	36	42	54	65
20	19	25	27	32	35	46	54	69	83
15	24	31	34	39	44	57	66	85	102
10	28	36	40	46	51	68	78	100	121
5	33	43	47	54	60	78	92	117	142
0	38	49	53	62	69	90	106	135	164
–5	43	56	61	71	79	103	120	154	187
–10	49	63	69	80	89	116	136	174	211
–15	54	71	77	89	100	130	153	195	236
–20	61	79	86	99	111	145	169	217	262
–25	68	87	95	110	123	160	188	240	291
–30	74	96	104	121	135	176	206	264	319
–35	81	105	115	133	148	193	226	289	350
–40	88	114	125	144	162	210	246	317	382
–50	104	135	147	170	190	246	290	372	450
–60	122	157	171	197	222	266	307	407	490

Notes:

(1) For SI units, 1 Btu/hr = 0.293 W; °C = ⅝ (°F –32); 1000 gal = 3.785 m^3.

(2) See Table 16.1.4(a) for elevated steel tanks and Table 16.1.4(c) for steel standpipes. To determine the capacity of heater needed, use the minimum mean atmospheric temperature for one day from Figure 16.1.4, and note the corresponding heat loss from the table.

--`,,```,,,,````-`-`,,`,,`,`,,`---

Copyright National Fire Protection Association
Provided by IHS under license with NFPA
No reproduction or networking permitted without license from IHS
Not for Resale

Table 16.1.4(c) Thousands of British Thermal Units Lost per Hour from Uninsulated Steel Suction Tanks and Standpipes Based on Minimum Water Temperature of 42°F (5.6°C) and a Wind Velocity of 12 mph (19.3 km/hr)

Atmospheric Temperature (°F)	Heat (Btu/hr) Loss per Square Foot Tank Radiating Surface	Tank Capacities (thousands of U.S. gallons)									
		100	125	150	200	250	300	400	500	750	1000
		Square Feet of Tank Surface*									
		2610	3030	3505	4175	4795	5360	6375	7355	9650	11740
		Btu Lost per Hour (thousands)									
35	32.3	85	98	114	135	155	175	206	238	312	380
30	46.1	121	140	162	193	222	248	294	340	445	542
25	61.5	161	187	216	257	295	330	393	453	594	722
20	77.2	202	234	271	323	371	414	493	568	745	907
15	93.6	245	284	329	391	449	502	597	689	904	1099
10	110.9	290	337	389	463	532	595	707	816	1071	1302
5	128.9	337	391	452	539	619	691	822	949	1244	1514
0	148.5	388	450	521	620	713	796	947	1093	1434	1744
–5	168.7	441	512	592	705	809	905	1076	1241	1628	1981
–10	190.7	498	578	669	797	915	1023	1216	1403	1841	2239
–15	213.2	557	646	748	891	1023	1143	1360	1569	2058	2503
–20	236.8	619	718	830	989	1136	1270	1510	1742	2286	2781
–25	262.3	685	795	920	1096	1258	1406	1673	1930	2532	3080
–30	288.1	752	873	1010	1203	1382	1545	1837	2119	2781	3383
–35	316.0	825	958	1108	1320	1516	1694	2015	2325	3050	3710
–40	344.0	898	1043	1206	1437	1650	1844	2193	2531	3320	4039
–50	405.6	1059	1229	1422	1694	1945	2175	2586	2984	3915	4762
–60	470.8	1229	1427	1651	1966	2258	2524	3002	3463	4544	5528

Notes:
1. For SI units, 1 ft = 0.3048 m; 1 ft^2 = 0.0929 m^2; 1 Btu/hr = 0.293 W; 1 Btu/ft^2 = 11.356 kJ/m^2; °C = ⅝ (°F –32); 1000 gal = 3.785 m^3.
2. Heat loss for a given capacity with a different radiating surface from that shown in the table shall be obtained by multiplying the radiating surface by the tabulated heat loss per square feet for the atmospheric temperature involved. The minimum radiation surface area shall be the wetted surface exposed to atmosphere plus the top water surface area. No heat loss shall be calculated for tank bottoms resting on grade.
3. See Table 16.1.4(b) for wood tanks and Table 16.1.4(a) for elevated steel or wood tanks. To determine the capacity of heater needed, use the minimum mean atmospheric temperature for one day from Figure 16.1.4, and note the corresponding heat loss from the table.
* These values represent square feet of radiating surface used for each capacity to compute the tabulated heat loss values and are typical for cone roof reservoirs on grade.

Table 16.1.4(d) Thousands of British Thermal Units Lost per Hour from Embankment-Supported Coated Fabric Suction Tanks Based on Minimum Water Temperature of 42°F (5.6°C) and a Wind Velocity of 12 mph (19.3 km/hr)

Atmospheric Temperature (°F)	Heat (Btu/hr) Loss Per Square Foot Tank Radiating Surface	Tank Capacities (thousands of U.S. gallons)							
		100	200	300	400	500	600	800	1000
		Square Feet of Exposed Tank Surface							
		2746	4409	6037	7604	9139	10630	13572	16435
		Btu Lost per Hour (thousands)							
35	22.2	61	98	134	168	202	235	300	363
30	28.5	78	126	173	217	261	304	389	470
25	35.1	96	155	212	266	320	372	476	576
20	41.5	114	183	251	315	379	441	564	682
15	48.0	132	212	290	364	438	510	652	789
10	54.5	149	241	329	413	497	579	740	896
5	61.0	167	269	369	463	557	648	828	1003
0	67.5	185	298	408	512	616	717	916	1109
–5	73.9	203	326	447	561	675	786	1004	1216
–10	80.4	220	355	486	610	734	855	1092	1322
–15	86.8	238	384	525	659	793	924	1180	1429
–20	93.3	256	412	564	708	852	992	1268	1536
–25	99.9	273	441	604	758	912	1061	1356	1642
–30	106.2	291	469	643	807	971	1130	1444	1749
–40	119.3	327	526	721	905	1089	1268	1620	1962
–50	131.9	362	584	799	1003	1207	1406	1796	2175
–60	145.1	397	641	878	1102	1326	1544	1972	2389

Notes:
1. For SI units, 1 ft = 0.3048 m; 1 ft^2 = 0.0929 m^2; 1 Btu/hr = 0.293 W; 1 Btu/ft^2 = 11.356 kJ/m^2; °C = ⅝ (°F –32); 1000 gal = 3.785 m^3.
2. Heat loss for a given capacity with a different radiating surface from that shown in the table shall be obtained by multiplying the radiating surface by the tabulated heat loss per square feet for the atmospheric temperature involved. The minimum radiation surface area shall be the wetted surface exposed to atmosphere plus the top water surface area. No heat loss shall be calculated for tank bottoms resting on grade.
3. To determine the capacity of heater needed, use the minimum mean atmospheric temperature for one day from Figure 16.1.4, and note the corresponding heat loss from the table.

Copyright National Fire Protection Association
Provided by IHS under license with NFPA
No reproduction or networking permitted without license from IHS
Not for Resale

Table 16.1.4(e) Heat Loss from Insulated[a] Steel Gravity Tanks (English Units) (thousands of British thermal units lost per hour when the temperature of the coldest water is 42°F; mean water temperature is 54°F)

Atmospheric Temperature (°F)	Heat (Btu/hr) Loss per Square Foot Tank Surface	Tank Capacity (thousands of U.S. gallons)							Add Btu per Lineal Foot Uninsulated Steel Riser	
		50 (1800) [b]	75 (2370)	100 (2845)	150 (3705)	200 (4470)	250 (5240)	300 (5905)	3 ft diam	4 ft diam
15	3.90	7.02	9.24	11.10	14.45	17.43	20.4	23.0	36.8	49.0
10	4.40	7.92	10.43	12.52	16.30	19.67	23.1	26.0	41.5	55.3
5	4.90	8.82	11.61	13.94	18.15	21.9	25.7	28.9	40.2	61.6
0	5.40	9.72	12.79	15.36	20.0	24.1	28.3	31.9	50.9	67.9
–5	5.90	10.62	13.98	16.79	21.9	23.4	30.9	34.8	55.6	74.1
–10	6.40	11.52	15.17	18.21	23.1	28.6	33.5	37.8	60.3	80.4
–15	6.90	12.42	16.35	19.36	25.6	30.8	36.2	40.1	65.0	86.7
–20	7.40	13.32	17.54	21.1	27.4	33.1	38.8	43.1	69.7	93.0
–25	7.90	14.22	18.72	22.5	29.3	35.3	41.4	46.6	74.5	99.3
–30	8.40	15.12	19.91	23.9	31.1	37.5	44.0	49.6	79.2	105.6
–35	8.90	16.02	21.1	25.3	33.0	39.8	46.6	52.6	83.9	111.8
–40	9.40	16.92	22.3	26.7	34.8	42.0	49.3	55.5	88.6	118.1
–50	10.40	18.72	24.6	28.6	38.5	46.5	54.5	61.4	98.0	130.7

[a] Based on an *R* factor of 10 hr-ft^2 –°F/Btu.

[b] Values in parentheses represent square feet of tank surface used for each capacity to compute the tabulated heat loss values and are typical for tanks with D/4 ellipsoidal roofs and bottoms.

Table 16.1.4(f) Heat Loss from Insulated[a] Steel Gravity Tanks (Metric Units) (kilowatts lost when the temperature of the coldest water is 5.6°C; mean water temperature is 12.2°C)

Atmospheric Temperature (°C)	Heat Loss (W) Tank Surface per Square Meter	Tank Capacity (m^3)							Add W/Lineal Meter Uninsulated Steel Riser	
		189 (167) [b]	284 (220)	379 (264)	568 (344)	757 (415)	946 (437)	1136 (549)	0.9 m diam	1.2 m diam
–10	12.61	2.11	2.77	3.33	4.34	5.23	6.14	6.92	36.1	47.6
–12	13.75	2.30	3.03	3.63	4.73	5.71	6.70	7.55	39.3	51.8
–15	15.45	2.58	3.40	4.08	5.32	6.41	7.53	8.48	44.2	58.3
–18	17.16	2.87	3.77	4.53	5.90	7.12	8.36	9.42	49.1	64.7
–21	18.86	3.15	4.15	4.98	6.49	7.83	9.19	10.36	53.9	71.1
–23	20.00	3.34	4.40	5.28	6.88	8.30	9.74	10.98	57.2	75.4
–26	21.70	3.62	4.77	5.73	7.47	9.01	10.57	11.92	62.1	81.8
–29	23.41	3.91	5.15	6.18	8.05	9.71	11.40	12.85	66.9	88.3
–32	25.11	4.19	5.52	6.63	8.64	10.42	12.23	13.79	71.8	94.7
–34	26.25	4.38	5.78	6.93	9.03	10.89	12.78	14.41	75.0	99.0
–37	27.95	4.67	6.15	7.38	9.62	11.60	13.61	15.35	79.9	105.4
–40	29.66	4.95	6.52	7.83	10.20	12.31	14.44	16.26	84.8	111.8
–45	32.50	5.43	7.15	8.58	11.18	13.49	15.83	17.84	92.9	122.5

[a] Based on an *R* factor of 1.76 m –°C/W.

[b] Values in parentheses represent square meters of tank surface used for each capacity to compute the tabulated heat loss values and are typical for tanks with D/4 ellipsoidal roofs and bottoms.

Copyright National Fire Protection Association
Provided by IHS under license with NFPA
No reproduction or networking permitted without license from IHS
Not for Resale

Table 16.1.4(g) Heat Loss from Suction Tanks, Walls and Roof Insulated[a] (English Units) (thousands of British thermal units lost per hour when the temperature of the coldest water is 42°F; mean water temperature is 54°F)

Atmospheric Temperature (°F)	Heat (Btu/hr) Loss per Square Foot Tank Surface	Tank Capacity (thousands of U.S. gallons)								
		100 (2610) [b]	150 (3505)	200 (4175)	250 (4795)	300 (5360)	400 (6375)	500 (7355)	750 (9650)	1000 (11740)
15	3.90	10.2	13.7	16.3	18.7	20.9	24.9	23.7	37.6	45.8
10	4.40	11.5	15.4	18.4	21.1	23.6	28.1	32.4	42.5	51.7
5	4.90	12.8	17.2	20.5	23.5	26.3	31.2	36.0	47.3	57.5
0	5.40	14.1	18.9	22.5	25.9	28.9	34.4	39.7	52.1	63.4
–5	5.90	15.4	20.7	24.6	28.3	31.6	37.6	43.4	56.9	69.3
–10	6.40	16.7	22.4	26.7	30.7	34.3	40.8	47.1	61.8	75.1
–15	6.90	18.0	24.2	28.8	33.1	37.0	44.0	50.7	66.6	81.0
–20	7.40	19.3	25.9	30.9	35.5	39.7	47.2	54.4	71.4	86.9
–25	7.90	20.6	27.7	33.0	37.9	42.3	50.4	58.1	76.2	92.7
–30	8.40	21.9	29.4	35.1	40.3	45.0	53.6	61.8	81.1	93.6
–35	8.90	23.2	31.2	37.2	42.7	47.7	56.7	65.5	85.9	104.5
–40	9.40	24.5	32.9	39.2	45.1	50.4	59.9	69.1	90.7	110.4
–50	10.40	27.1	36.5	43.4	49.9	55.7	66.3	76.5	100.4	122.1

[a] Based on an R of 10 hr-ft^2 –°F/Btu.

[b] Heat admitted to tank water from the ground not included; values in parentheses represent square feet of surface used for each capacity to compute the tabulated heat loss values.

Table 16.1.4(h) Heat Loss from Suction Tanks, Walls and Roof Insulated[a] (Metric Units) (kilowatts lost when the temperature of the coldest water is 5.6°C; mean water temperature is 12.2°C)

Atmospheric Temperature (°C)	Heat (W) Loss per Square Meter Tank Surface	Tank Capacity (m^3)								
		379 (243) [b]	568 (326)	757 (388)	946 (445)	1136 (498)	1514 (592)	1893 (683)	2839 (897)	3785 (1091)
–10	12.61	3.06	4.11	4.89	5.61	6.28	7.47	8.61	11.31	13.76
–12	13.75	3.34	4.48	5.34	6.12	6.85	8.14	9.39	12.33	15.00
–15	15.45	3.75	5.04	5.99	6.88	7.69	9.15	10.55	13.86	16.86
–18	17.16	4.17	5.59	6.66	7.64	8.55	10.16	11.72	15.39	18.72
–21	18.86	4.58	6.15	7.32	8.39	9.39	11.17	12.88	16.92	20.60
–23	20.00	4.86	6.52	7.76	8.90	9.96	11.84	13.66	17.94	21.80
–26	21.70	5.27	7.07	8.42	9.66	10.81	12.85	14.82	19.46	23.70
–29	23.41	5.69	7.63	9.08	10.42	11.66	13.86	15.99	21.00	25.50
–32	25.11	6.10	8.19	9.74	11.17	12.50	14.87	17.15	22.50	27.40
–34	26.25	6.38	8.56	10.18	11.68	13.07	15.54	17.93	23.50	28.60
–37	27.95	6.79	9.11	10.84	12.44	13.92	16.55	19.09	25.10	30.50
–40	29.66	7.21	9.67	11.51	13.20	14.77	17.56	20.30	26.60	32.40
–45	32.50	7.90	10.60	12.61	14.46	16.18	19.24	22.20	29.20	35.50

[a] Based on an R factor of 1.76 m –°C/W.

[b] Heat admitted to tank water from the ground not included; values in parentheses represent square feet of surface used for each capacity to compute the tabulated heat loss values.

The R value of insulation is determined by its thickness and insulating qualities. An R factor of 10 or more is obtained by applying 1½ in. (38 mm) of polyurethane foam, 2½ in. (64 mm) of glass fiberboard, or 4 in. (100 mm) of cellular glass board.

For other R values, Heat loss = Tabulated value × (10)/R or Heat loss metric = Tabulated value × (176)/R.

--`,,```,,,,````-`-`,,`,,`,`,,`---

Copyright National Fire Protection Association
Provided by IHS under license with NFPA
No reproduction or networking permitted without license from IHS

Not for Resale

Table 16.1.7.1 Minimum Size (in.) of Circulating Pipes Required for Elevated Steel Tanks [tank capacity (U.S. gallons)]

Minimum One-Day Mean Temp. (°F)	15,000	20,000	25,000	30,000	40,000	50,000	60,000	75,000	100,000	150,000
+10	2	2	2	2	2	2	2	2	2	2½
+5	2	2	2	2	2	2	2	2	2	2½
0	2	2	2	2	2	2	2	2	2½	2½
−5	2	2	2	2	2	2	2	2	2½	2½
−10	2	2	2	2	2	2	2	2½	2½	2½
−15	2	2	2	2	2	2	2½	2½	2½	3
−20	2	2	2	2	2	2½	2½	2½	2½	3
−25	2	2	2	2	2½	2½	2½	2½	3	3
−30	2	2	2	2	2½	2½	2½	2½	3	3
−35	2	2	2	2½	2½	2½	2½	3	3	3
−40	2	2	2	2½	2½	2½	2½	3	3	3

Note: For SI units, °C = ⅝ (°F −32); 1000 gal = 3.785 m^3.

16.1.7.5.2 An accurate thermometer that is graduated at least as low as 30°F (−1.1°C) shall be placed in the cold-water pipe at a point where it will register the temperature of the coldest water in the system.

16.1.7.5.3 A listed indicating valve of the same size as the pipe shall be placed in the cold-water pipe at the point of connection to the discharge pipe or tank side.

16.1.7.5.4 A 2 in. (50 mm) drainpipe that discharges at a visible point shall be connected into the cold-water return pipe between the heater and the cold-water controlling valve to enable the flushing of water from the tank through the hot-water pipe, heater, and drain for clean-out purposes.

16.1.7.5.5 The drainpipe shall be arranged as specified in Figure 16.1.7.5.5(a) and Figure 16.1.7.5.5(b).

16.1.8 Relief Valve.

16.1.8.1 A listed relief valve shall be provided in the water chamber or pipe between the hot-water and cold-water valves of any water heater.

16.1.8.2 The relief valve shall be adjusted to open at a pressure of 120 lb/$in.^2$ (8.3 bar).

16.1.8.2.1 The opening pressure shall be neither greater than the allowable working pressure of the heater nor less than the maximum static or filling pressure to which it is subjected.

16.1.8.3 Where the heater is located close to stock that can be damaged by water, the relief shall be piped to a safe point.

16.1.9 Operation.

16.1.9.1* The thermometer shall be observed daily, and the supply of heat shall be regulated to maintain the temperature at 42°F (5.6°C).

16.1.9.1.1 Lower temperatures are dangerously near the freezing point and shall not be permitted.

16.1.9.1.2 High temperatures shall not be permitted, since they are detrimental to the equipment, particularly wood tanks and the paint in steel tanks.

16.1.9.2 Steam pressure shall be regulated by throttling the steam valve or by using a listed automatic regulatory device.

16.1.9.2.1 A small flow of steam shall constantly pass by the automatic regulating device so that circulation does not cease entirely when the regulator bulb is located in a circulating pipe that is not exposed to atmospheric temperature.

16.1.9.3 When circulating systems are temporarily shut off, the circulation shall be turned on and run for at least 2 hours to ensure that the water in the pipe is not approaching room temperature while the water in the tank is in danger of freezing.

16.1.9.3.1 Valves in circulating pipes shall be wide open when the heater is in operation.

16.1.9.3.2 An explosion or rupture hazard to the heater shall be avoided by shutting off or removing the source of heat when both the hot-water and cold-water valves are shut for any reason.

16.1.9.3.3 A relief valve shall not compensate for this precaution.

16.1.9.4 When first admitting steam, all air shall be blown from steam heaters, radiators, and traps by means of the air valve or vent on the radiator or trap.

16.2* Heating Requirements.

16.2.1* If tanks are located where the lowest mean temperature for one day is less than 5°F (−15°C), as shown in Figure 16.1.4, a gravity circulation method of heating elevated tanks, or water storage tanks that are installed on or below grade, shall be employed for special situations, as covered in 16.2.1.1 or 16.2.1.2.

16.2.1.1 A steam-heated vertical radiator system shall be used for elevated tanks with unprotected risers of 3 ft (0.91 m) or more in diameter that have tower heights under 100 ft (30.5 m) *(see 13.1.2)*, standpipes, and on-grade suction tanks.

16.2.1.2 A steam-heated vertical radiator system also shall be used for tower heights over 100 ft (30.5 m).

16.2.1.2.1 An open-ended pipe sleeve similar to that shown in Figure B.1(u) shall be used.

Copyright National Fire Protection Association
Provided by IHS under license with NFPA
No reproduction or networking permitted without license from IHS
Not for Resale

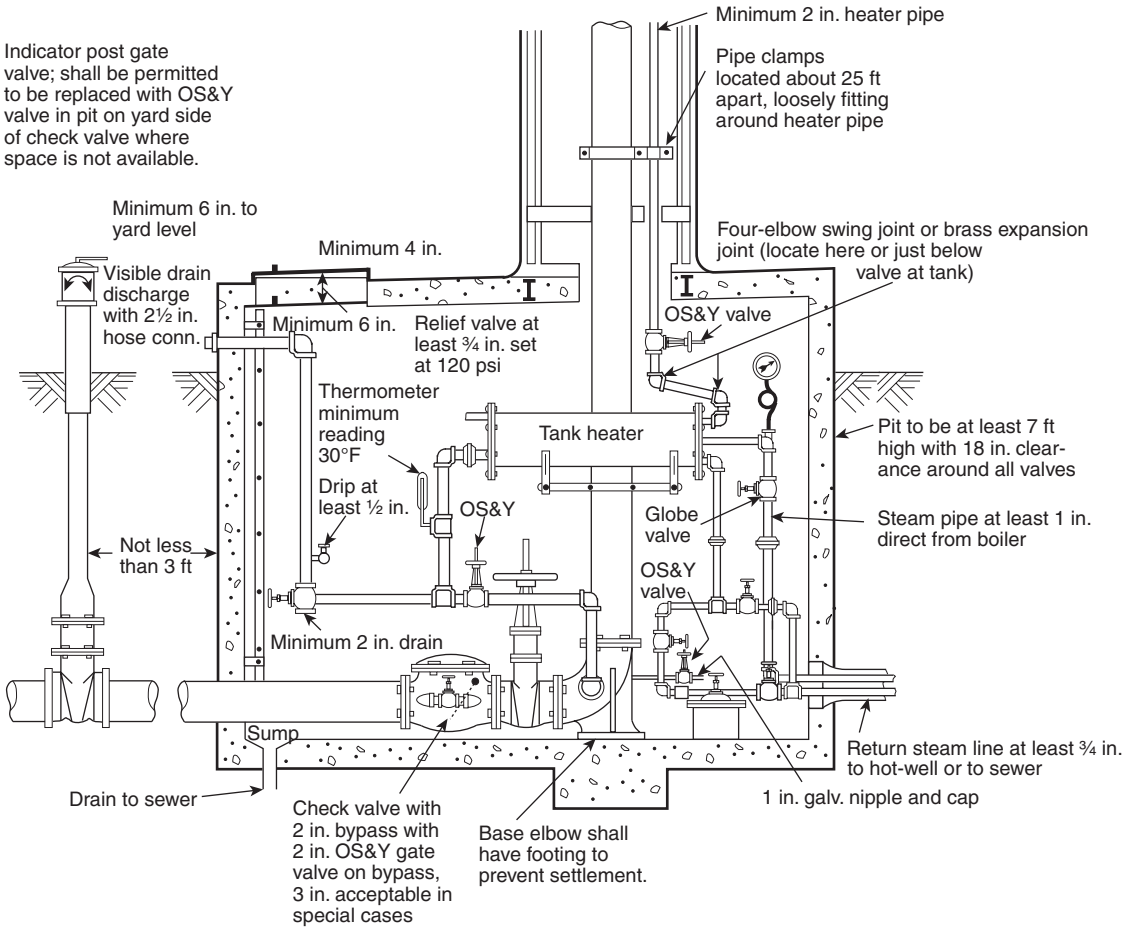

For SI units, 1 in. = 25.4 mm; 1 ft = 0.3048 m; 1 psi = 0.0689 bar; °C = 5/9 (°F–32).

FIGURE 16.1.7.5.5(a) Tank Heater Drain Arrangement at Base of Riser.

16.2.1.3 Immersed steam coils shall be used for suction tanks and standpipes that have flat bottoms supported near ground level in situations where the tank is kept filled so that the steam coils are continuously submerged.

16.2.2 Where the lowest mean temperature for one day is 5°F (–15°C) or above, as shown in Figure 16.1.4, and only intermittent heating is required for elevated tanks with unprotected risers of less than 3 ft (0.91 m) in diameter, heating shall be by means of water circulation or immersed steam coils, or by blowing steam from a supply that is directed into the water.

16.2.2.1 Suction tanks, standpipes, and elevated tanks that have risers of 3 ft (0.91 m) or more in diameter shall not be required to have provision for heat.

16.2.3 Where the lowest mean temperature for one day is above 15°F (–9.4°C) as shown in Figure 16.1.4, the method of heating tanks with frostproof risers of less than 3 ft (0.91 m) in diameter shall be a steam loop or steam radiator, or thermostatically controlled electric strip heaters shall be placed inside the frostproof casing.

16.3 Heating Systems.

16.3.1* Steam Water Heaters.

16.3.1.1 A steam water heater shall consist of a cast-iron or steel shell where water circulates around steam tubes or coils of brass or copper.

16.3.1.2 Galvanized steel or iron steam tubes shall be permitted but are not advised because of their more rapid depreciation and poorer heat-transfer qualities.

16.3.1.3 The shell and tubes shall be designed to withstand a test pressure of at least 2½ times the rated working pressure and not less than 300 lb/in.^{2} (20.7 bar), and they shall be so tested before shipment.

16.3.1.4 Heaters shall have a bolted flange on at least one end to facilitate disassembly for inside cleaning.

16.3.1.5 Such heaters shall be well insulated, unless it is desired to use the heat loss for heating the valve pit or other housing.

16.3.1.6 Steam Supply.

16.3.1.6.1 Steam water heaters shall be connected to a reliable steam supply with a pressure not less than 10 lb/in.^{2} (0.7 bar) and not over 50 lb/in.^{2} (3.4 bar).

Copyright National Fire Protection Association
Provided by IHS under license with NFPA
No reproduction or networking permitted without license from IHS
Not for Resale

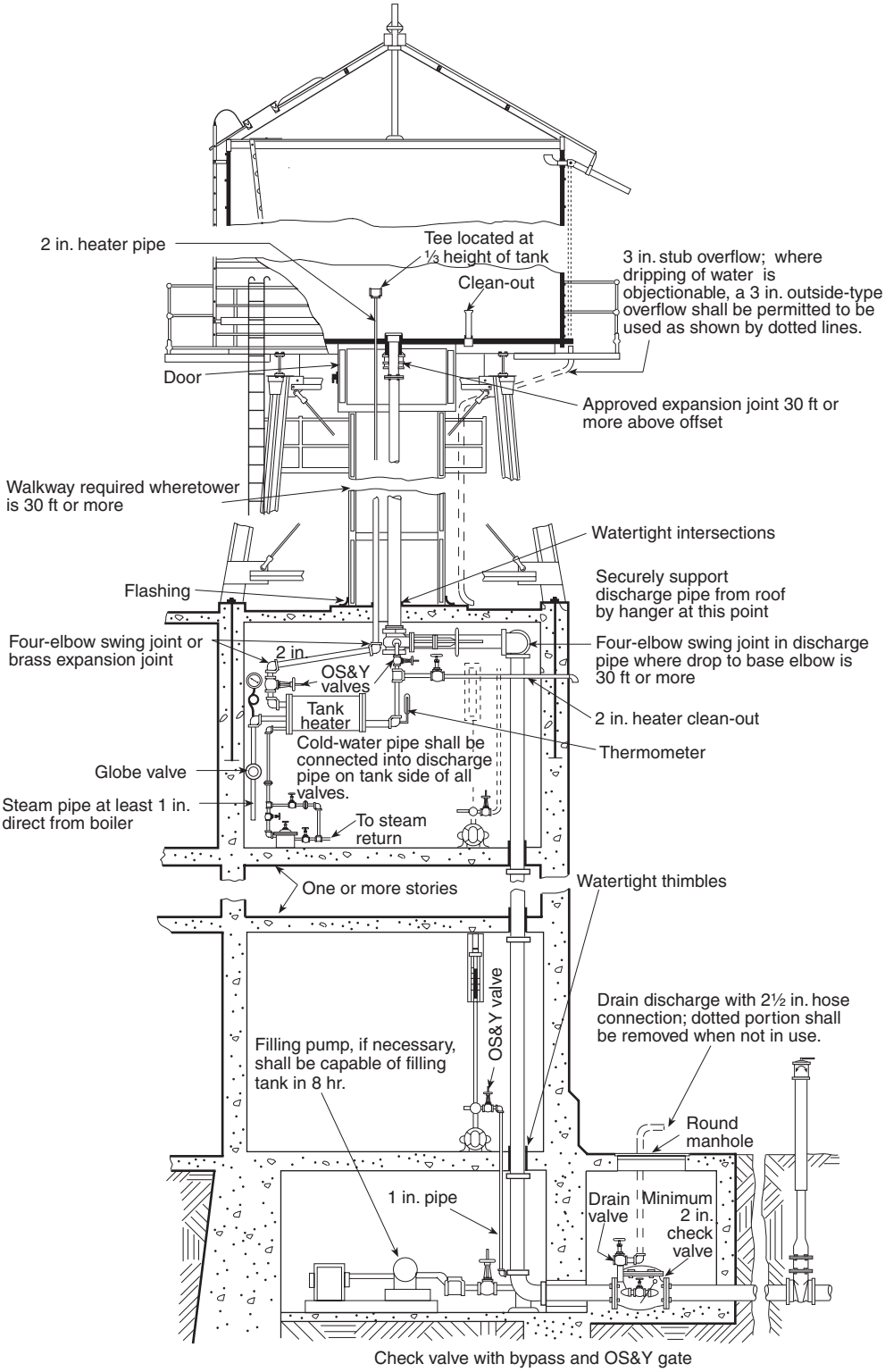

Check valve with bypass and OS&Y gate

For SI units, 1 in. = 25.4 mm; 1 ft = 0.3048 m.

FIGURE 16.1.7.5.5(b) Tank Heater Drain Arrangement.

Copyright National Fire Protection Association
Provided by IHS under license with NFPA
No reproduction or networking permitted without license from IHS
Not for Resale

16.3.1.6.2 The steam pipes shall have an area at least equivalent to that of 1 in. (25 mm) nominal pipe for each heater supplied and shall run direct from the boiler heater.

16.3.1.6.3 A globe valve shall be placed in the line near the heater, and a steam gauge shall be provided between the valve and the heater.

16.3.1.6.4 Where the heater is connected to a vacuum system, the layout shall have the approval of the maker of the heating specialties and, in all cases, a final approval shall be obtained from the authority having jurisdiction.

16.3.1.7 Steam Return.

16.3.1.7.1 The steam return shall be arranged to relieve the heater of condensate.

16.3.1.7.2 The area of the return pipe shall be at least equivalent to the area of ¾ in. (20 mm) nominal pipe for each heater served.

16.3.1.7.3 A reliable steam trap at least ¾ in. (20 mm) in size, and that is equipped with an air vent and a water gauge, shall be provided near the heater where the return is not accomplished by means of gravity, or where the return is not to a vacuum system.

16.3.1.7.4 Excessive lifts from the trap shall be avoided.

16.3.1.7.5 A ¾ in. (19 mm) nominal pipe or larger bypass with a globe valve that is normally kept shut shall be provided around the trap.

16.3.1.7.6 A globe valve also shall be placed on each side of the trap between the bypass connections.

16.3.1.7.7 A gravity return shall be used only where the heater is located well above the boiler water level and where the steam pressure at the heater plus the static head of water in the return pipe between the heater and the boiler water level is greater than the steam pressure at the boiler.

16.3.1.7.8 Wherever it becomes necessary to return the condensate to a vacuum heating system, the layout shall have the approval of the makers of the heating specialties, as well as a final approval by the authority having jurisdiction.

16.3.1.8 Multiple Heaters.

16.3.1.8.1 Where two or more heaters are used, they shall be placed at one level and connected in parallel with symmetrical piping, with a relief valve and controlling valves in the waterlines of each.

16.3.1.8.2 A globe valve shall be placed in each steam supply line.

16.3.2 Gas-Fired Water Heaters.

16.3.2.1 A gas-fired water heater of sufficient strength to resist the water pressure shall be permitted to be used.

16.3.2.2 The heater shall be of a type listed by a recognized testing laboratory and shall have a permanent marking that indicates the input ratings in British thermal units (kilowatts).

16.3.2.3 The heater and accessories shall be installed in accordance with the manufacturers' recommendations and shall be provided with listed combustion safeguards.

16.3.2.4 The gas-fired water heater shall be equipped to prevent abnormal discharge of gas, in the event of ignition failure or accidental flame extinguishment, by automatic means that are specifically approved for the heater.

16.3.2.5 A high-limit switch shall be provided in the hot-water pipe close to the heater to shut off the gas supply automatically when the water temperature exceeds 190°F (87.8°C).

16.3.2.6 Thermostatic control of a burner with a temperature response element shall be located in the coldest water affected by atmospheric temperature, and a minimum water temperature of 5.6°C (42°F) shall be maintained.

16.3.3 Oil-Fired Water Heaters.

16.3.3.1 An oil-fired water heater of sufficient strength to resist the water pressure shall be permitted to be used.

16.3.3.2 The heater shall be of a type that is listed by a recognized testing laboratory and shall have a permanent marking that indicates the input rating in British thermal units (kilowatts).

16.3.3.3 The heater and accessories shall be installed in accordance with the manufacturers' recommendations and shall be provided with listed combustion safeguards.

16.3.3.4 The heater shall be equipped to prevent abnormal discharge of oil at the burner, in the event of ignition failure or accidental flame extinguishment, by automatic means that are specifically approved for the heater.

16.3.3.5 A high-limit switch shall be provided in the hot-water pipe to the heater to shut off the oil supply automatically when the water temperature exceeds 190°F (87.8°C).

16.3.3.6 Thermostatic control of the burner with a temperature response element shall be located in the coldest water affected by atmospheric temperature, and a minimum water temperature of 42°F (5.6°C) shall be maintained.

16.3.3.7 The oil tank shall be buried outside the heater house.

16.3.4 Coal-Burning Water Heaters.

16.3.4.1 A coal-burning water heater of sufficient strength to resist the water pressure shall be used.

16.3.4.2 Water circulates through a chamber, through a series of chambers, or through brass pipe coils around and over the fire.

16.3.4.3 The heater and accessories shall be installed in accordance with the manufacturers' recommendations and shall be provided with listed combustion safeguards.

16.3.5 Electric Water Heaters.

16.3.5.1 An electric water heater of sufficient strength to resist the water pressure shall be permitted to be used.

16.3.5.2 A water-circulating pump shall be used in conjunction with electric heating elements.

16.3.5.3 A single water heater or boiler of adequate capacity shall be permitted to be used.

16.3.5.4 However, to avoid sudden peak demands on the electric service, multiple heaters shall be installed in parallel *(see 16.3.1.8)*, with the various thermostatic controls set at different temperatures.

16.3.5.5 The system shall have adequate capacity to maintain a minimum water temperature of 42°F (5.6°C) when all heater elements are in operation.

Copyright National Fire Protection Association
Provided by IHS under license with NFPA
No reproduction or networking permitted without license from IHS
Not for Resale

16.3.5.6 Thermostatic control with a temperature response element shall be located in the coldest water affected by atmospheric temperature.

16.3.5.7 The hot-water pipe that is close to the heater shall include a manual reset high-limit control thermostat that disconnects all ungrounded electric conductors to the heater in the event that the water temperature exceeds the temperature of the high-limit thermostat [approximately 190°F (87.8°C)].

16.3.5.8 Electric heaters and accessories shall be of a type listed by a recognized testing laboratory, shall have a permanent marking that indicates the kilowatt capacity, and shall be installed in accordance with the manufacturers' recommendations.

16.3.5.8.1 The installation of all electric wiring shall comply with NFPA 70.

16.3.6 Vertical Steam Radiators.

16.3.6.1* A steam-heated vertical radiator system also shall be permitted to be used for tower heights over 100 ft (30.5 m).

16.3.6.1.1 Steam-heated vertical radiator systems for tower heights over 100 ft (30.5 m) shall use an open-ended pipe sleeve similar to the one shown in Figure B.1(u).

16.3.6.2 An accurate angle socket thermometer that has at least a 6 in. (152 mm) stem and that is calibrated as low as 30°F (−1.1°C) shall be permanently inserted through the plate or standpipe and as far from the heating unit as possible.

16.3.6.2.1 An angle socket thermometer shall not be required for suction tanks with a maximum height of 25 ft (7.6 m).

16.3.6.3 The radiator shall consist of a steam pipe that shall be of a size needed to convey the steam needed under the worst conditions but that shall not be less than 1½ in. (40 mm).

16.3.6.4 The radiator shall be contained within a watertight condensing chamber of copper tubing, or of cast-iron, steel, or brass pipe; or it shall be contained within a suction tank.

16.3.6.5 The radiator shall have sufficient area to maintain the temperature of the coldest water at not less than 42°F (5.6°C). *(See A.16.3.1.)*

16.3.6.6 In the case of radiator heaters without a surrounding pipe sleeve *(see 16.3.6.10)*, surface water temperatures shall be ascertained by means of a listed temperature-detecting device.

16.3.6.7 The device shall have the temperature response element secured in a position approximately 3 ft (0.91 m) below the permanent fire service water level.

16.3.6.8 Where long-distance thermometers are used, the external tubing shall be supported at intervals of approximately 12 ft (3.7 m), and the indicating dial shall be located conveniently near grade in a weatherproof cabinet.

16.3.6.9 In the case of a high structure without a permanent fire-service water level, a circulating type of heating system or radiator heater with a sleeve shall be used with a socket thermometer that is located in the coldest water.

16.3.6.10 The radiator shall be supplied from a reliable source with at least 10 lb/in.^{2} (0.7 bar) of steam pressure. *(See A.16.3.1 for low-pressure steam.)*

16.3.6.10.1 Where steam pressure in excess of 100 lb/in.^{2} (6.9 bar) is available on the heater, a reducing valve shall be placed in the steam-supply pipe near the boiler header, and a relief valve that is set at 100 lb/in.^{2} (6.9 bar) shall be installed between the reducing valve and the heater.

16.3.6.10.2 The steam-supply pipe shall be a minimum of 1½ in. (40 mm) but shall be of a size to furnish the needed quantity of steam; it shall have a steam gauge with siphon at a convenient location.

16.3.6.10.3 The steam supply and a return connection of at least ¾ in. (20 mm) from the base of the condensing chamber shall be provided with a trap arrangement, as shown in Figure 16.3.6.10.3.

16.3.6.10.3.1 A radiator that is supplied by a separately fired boiler that is located above grade near the tank shall not be required to be provided with the trap arrangement shown in Figure 16.3.6.10.3.

16.3.6.10.4 Other arrangements for disposing of condensate shall be permitted, provided approval is first obtained from the authority having jurisdiction.

16.3.6.11 Where a separately fired boiler that is located above grade near the tank supplies steam to the radiator, the inner pipe shall contain several ¼ in. (6.4 mm) holes below the water level of the boiler.

16.3.6.11.1 The steam-supply pipe shall pitch upward from the top of the nearby boiler to a connection to the inner pipe in the radiator, as shown in Figure 16.3.6.11.1.

16.3.6.12 The inner pipe for all radiator heaters shall extend to within approximately 1 ft (0.3 m) of the top of the condensing chamber.

16.3.6.12.1 The radiator sleeve and the reduced extension of the sleeve up into the main tank shall be adequately supported and braced at points not over 25 ft (7.6 m) apart.

16.3.7 Heating with Hot Water.

16.3.7.1 Hot water as a heating element in the coils or shell of a heater that is designed for steam shall not be used.

16.3.7.2 Hot water shall be permitted to be used where special permission is obtained from the authority having jurisdiction.

16.3.7.3 The complete detailed design of the heater, together with information regarding the temperature of the hot water, shall be submitted to the authority having jurisdiction and approval shall be received before the equipment is installed.

16.3.8 Steam Coils Inside Tanks.

16.3.8.1 The coil shall consist of at least 1¼ in. (32 mm) brass or copper pipe or 2 in. (50 mm) steel pipe.

16.3.8.2 The pipe shall be pitched to drain and shall be supplied with steam, at not less than 10 lb/in.^{2} (0.7 bar) pressure, through a pipe of sufficient size to furnish the needed quantity of steam from a reliable source.

16.3.8.3 A globe valve and a steam gauge with a siphon shall be placed in the steam supply line.

16.3.8.4 The coil shall be supported and, together with the supply and return pipes, shall have provision for expansion.

16.3.8.5 The return shall be connected to a steam trap.

Copyright National Fire Protection Association
Provided by IHS under license with NFPA
No reproduction or networking permitted without license from IHS
Not for Resale

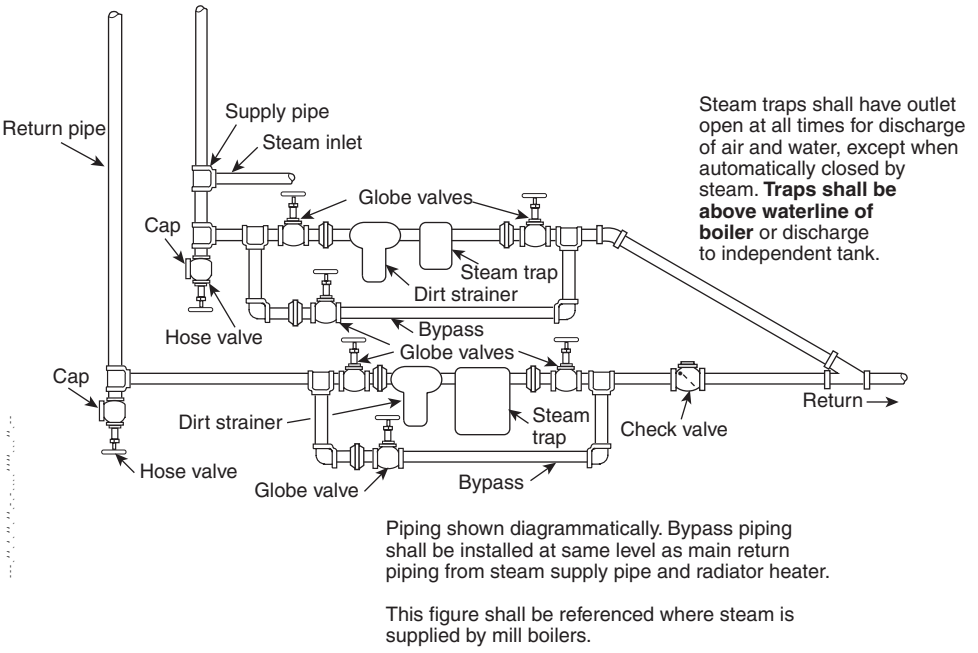

FIGURE 16.3.6.10.3 Steam Trap Arrangement.

16.3.8.6 Where the tank is elevated, the steam pipes shall be placed inside the frostproof casing around the discharge pipe. *(See 16.1.5.)*

16.3.8.7 The coil shall contain an area of heating surface to maintain the temperature of the coldest water at not less than 42°F (5.6°C). *(See A.16.3.1.)*

16.3.8.8 The coil shall be placed within approximately 3 ft (0.91 m) of the shell and shall be sized for a maximum steam velocity of 8000 ft/min (2438 m/min) so that the pressure drop does not exceed one-half of the initial inlet pressure.

16.3.8.9 The surface water temperatures for elevated tanks, standpipes, and suction tanks shall be ascertained by means of a listed temperature-detecting device.

16.3.8.10 The device shall have the temperature response element secured in a position approximately 3 ft (0.91 m) below the permanent fire-service water level.

16.3.8.11 Where long-distance thermometers are used, the external tubing shall be supported at intervals of approximately 12 ft (3.7 m), and the indicating dial shall be located conveniently near grade in a weatherproof cabinet.

16.3.8.12 In the case of a high structure without a permanent fire-service water level, a circulating type of heating system or radiator heater with a sleeve shall be used with a socket thermometer that is located in the coldest water.

16.3.8.13 Any exception to these provisions shall require approval from the authority having jurisdiction.

16.3.9 Direct Discharge of Steam.

16.3.9.1 Where blowing steam directly into the tank from a supply, a pipe of not less than 1 in. (25 mm) in diameter shall be used.

16.3.9.2 The steam pipe shall extend inside the frostproof casing and through the bottom to a point above the maximum water level, and then it shall extend horizontally for a short distance.

16.3.9.3 An air vent and a check valve shall be provided to keep the water from siphoning back and then downward to a point 3 ft or 4 ft (0.9 m or 1.2 m) below the normal fire-service water level.

16.3.9.4 The section of the pipe that is inside the tank shall be of braced brass or copper. A ½ in. (15 mm) drip valve shall be provided at the base of the steam pipe.

16.3.10 Solar Heating.

16.3.10.1 Tanks shall be permitted to be equipped with solar heating to reduce the consumption of other forms of heating energy.

16.3.10.2 A solar-heated tank shall have a backup heating system, as described in this chapter.

16.4 Tank Insulation.

16.4.1 Where permitted by the authority having jurisdiction, tanks shall be permitted to be insulated to conserve energy.

16.4.2 Insulation materials shall be listed and shall be installed with protection against fire, exposure, corrosion, and weather.

16.4.3 Heating requirements shall be based on design information in accordance with the ASHRAE *Handbook of Fundamentals*.

16.4.4 Outside winter design temperatures shall be in accordance with Figure 16.1.4.

16.4.5 Heat-loss calculations shall be based on an average water temperature of 55°F (12.8°C).

Copyright National Fire Protection Association
Provided by IHS under license with NFPA
No reproduction or networking permitted without license from IHS
Not for Resale

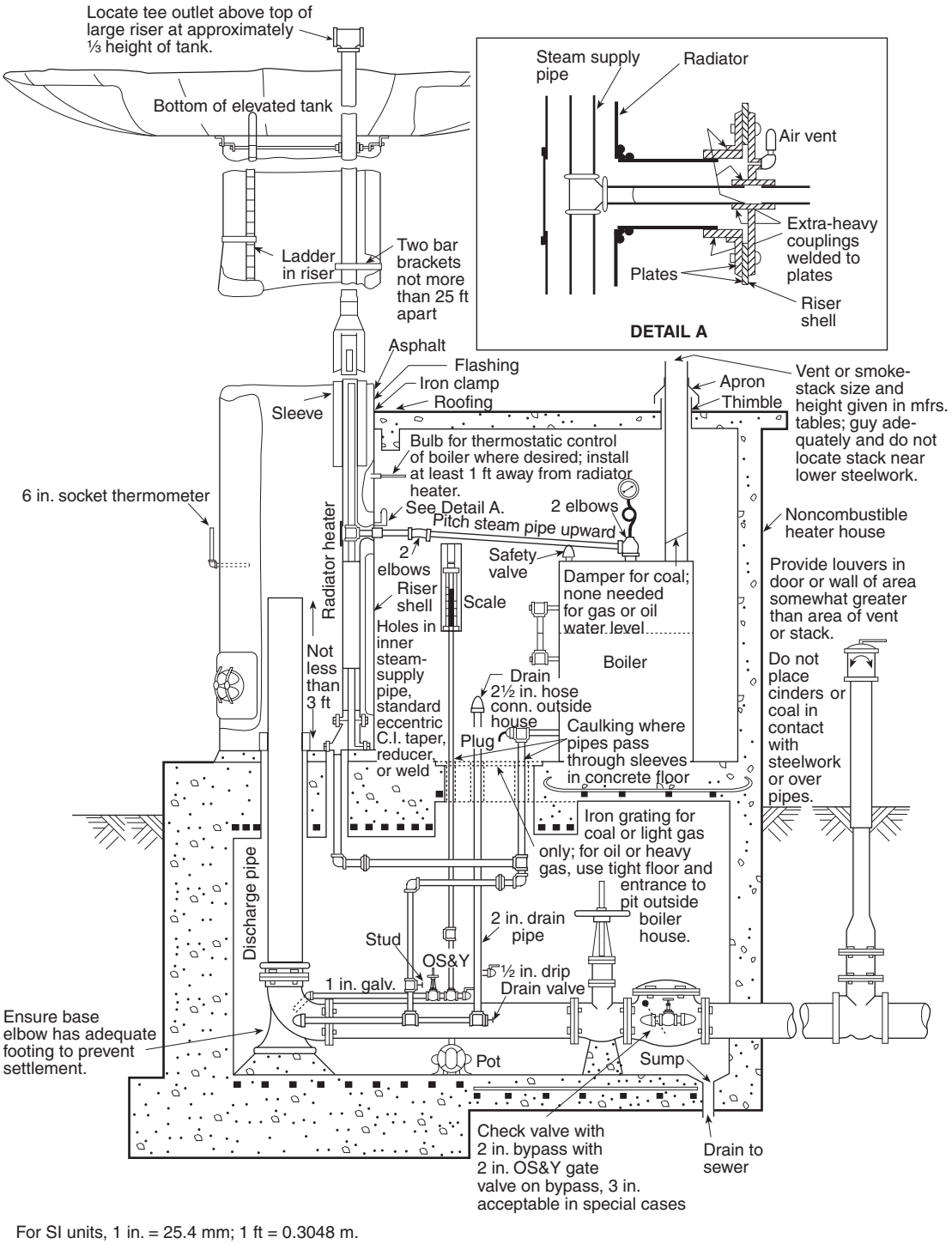

For SI units, 1 in. = 25.4 mm; 1 ft = 0.3048 m.

FIGURE 16.3.6.11.1 Aboveground Steam Boiler Radiator Heater Arrangement.

16.5 Heating for Embankment-Supported Coated Fabric Suction Tanks.

16.5.1 If tanks are located where the lowest mean temperature for one day is less than 5°F (–15°C), as shown in Figure 16.1.4, a water-recirculating system with a heat exchanger/heater shall be provided and installed according to the heater manufacturer's recommendations.

16.5.2 The heat exchanger/heater shall be plainly marked with a plate that indicates the British thermal unit (kilowatt) input.

Copyright National Fire Protection Association
Provided by IHS under license with NFPA
No reproduction or networking permitted without license from IHS
Not for Resale

16.5.3 A fitting for the water-recirculation line shall be located in the bottom of the tank diagonally opposite from the concrete sump that contains the inlet/outlet for the tank. *[See Figure B.1(g) for a typical installation.]*

16.5.4 The heater shall have a British thermal unit (kilowatt) per hour capacity in accordance with Figure 16.1.4 and Table 16.1.4(d) for determination of heater capacity.

16.5.5 When the ambient air temperature drops below 42°F (5.6°C), a thermostat shall activate a pump that draws water from the tank through the inlet/discharge and pumps the water back into the tank through the recirculation fitting.

16.5.6 When the temperature of the water flowing through the inlet/discharge line in the pump house drops below 44°F (6.7°C), a second thermostat shall activate a heat exchanger/heater.

16.5.7 The heat exchanger/heater shall be located in a valve pit. *[See Figure B.1(g) for a typical installation.]*

16.5.8 The valve pit temperature shall be maintained above freezing at all times.

16.5.9 The recirculation pipe shall be not less than 2 in. (50 mm).

16.5.10 The size of the pipe required shall be a function of the tank size and the winter weather conditions that prevail at the site, as indicated in Figure 16.1.4.

Chapter 17 Acceptance Test Requirements

17.1 Inspection of Completed Equipment.

17.1.1 Prior to placing the tank in service, a representative of the tank contractor and a representative of the owner shall conduct a joint inspection of the completed equipment.

17.1.2* Written reports of completed equipment inspections shall be made in triplicate, and a copy that has been signed by the contractors and the owners shall be sent to the authority having jurisdiction.

17.2 Testing.

17.2.1 All coated steel tanks shall be tested for holidays and coating thickness.

17.2.2 Corrective action shall be completed prior to acceptance.

17.3 Welded Steel Tanks.

17.3.1 Flat Bottoms. Upon completion of the welding of the tank bottom, it shall be tested by one of the following methods and shall be made entirely tight:

(1) Air pressure or vacuum applied to the joints, using soap suds, linseed oil, or other suitable material for the detection of leaks
(2) Joints tested by the magnetic particle method

17.3.2 General. Upon completion of the tank construction, it shall be filled with water furnished at the tank site by the owner's representative using the pressure necessary to fill the tank to the maximum working water level.

17.3.3 Any leaks in the shell, bottom, or roof (if the roof contains water) that are disclosed by the test shall be repaired by chipping or melting out any defective welds and then rewelding.

17.3.4 Repair work shall be done on joints only when the water in the tank is a minimum of 2 ft (0.6 m) below the point under repair.

17.3.5 The tank shall be tested as watertight to the satisfaction of the authority having jurisdiction and/or the owner's representative.

17.4* Bolted Steel Tanks. The completed tank shall be tested by filling it with water, and any detected leaks shall be repaired in accordance with AWWA D103.

17.5 Pressure Tanks. Tests shall be performed according to 17.5.1 through 17.5.4.

17.5.1 Each pressure tank shall be tested in accordance with the ASME *Boiler and Pressure Vessel Code*, "Rules for the Construction of Unfired Pressure Vessels," before painting.

17.5.1.1 The hydrostatic test pressure shall be a minimum of 150 lb/in.^{2} (10.3 bar).

17.5.2 In addition to the ASME tests, each pressure tank shall be filled to two-thirds of its capacity and tested at the normal working pressure with all valves closed and shall not lose more than ½ psi (0.03 bar) pressure in 24 hours.

17.5.3 A certificate signed by the manufacturer that certifies that the foregoing tests have been made shall be filed with the authority having jurisdiction.

17.5.4 A repetition of the tests specified in 17.5.1 through 17.5.3 shall be required after the tank has been set in place and connected. Where conditions do not allow shipping the tank after it is assembled, these tests shall be conducted following its assembly in the presence of a representative of the authority having jurisdiction.

17.6 Embankment-Supported Coated Fabric Tanks.

17.6.1 The tank shall be tested for leakage prior to shipment.

17.6.2 The tank also shall be tested for leakage after installation.

17.7 Concrete Tanks.

17.7.1 Leakage Testing. On completion of the tank and prior to any specified backfill placement at the footing or wall, the test specified in 17.7.2 through 17.7.4 shall be applied to ensure watertightness.

17.7.2 Preparation. The tank shall be filled with water to the maximum level and left to stand for at least 24 hours.

17.7.3 Measurement. The drop in liquid level shall be measured over the next 72-hour period to determine the liquid volume loss. Evaporative losses shall be measured or calculated and shall be deducted from the measured loss to determine whether there is net leakage.

17.7.4 There shall be no measurable leakage after the tank is placed in service.

17.8 Wood Tanks.

17.8.1 Wood tanks shall be filled and tested for liquid tightness for 48 hours.

17.8.2 Testing shall be done under the supervision of a qualified wood tank specialist.

Copyright National Fire Protection Association
Provided by IHS under license with NFPA
No reproduction or networking permitted without license from IHS
Not for Resale

17.8.3 Tests shall be in accordance with the National Wood Tank Institute Bulletin S82.

17.9 Fiberglass-Reinforced Plastic Tanks—Hydrostatic Test.

17.9.1 After the excavation hole is backfilled to the bottom of the influent and effluent piping, influent and effluent piping shall be sealed off with watertight caps or plugs.

17.9.2 The tank shall be filled with water up to 3 in. (76 mm) into the access openings.

17.9.3 The water shall be allowed to stand in the tank for a minimum of 2 hours.

17.9.4 The tank shall be examined for leakage or drop in water elevation.

17.9.5 If the water level drops, plugs or caps sealing off piping shall be checked to see that they are tight.

17.9.6 If tightening is required, more water shall be added to fill air voids back to the standard testing level.

17.9.7 The tank shall show no visible signs of leakage, and the water level shall stabilize within a 2-hour test period.

17.10 Disposal of Test Water. The owner's representative shall provide a means for disposing of test water up to the tank inlet or drain pipe.

Chapter 18 Inspection, Testing, and Maintenance of Water Tanks

18.1 General. Tanks shall be periodically inspected, tested, and maintained in accordance with NFPA 25.

Annex A Explanatory Material

Annex A is not a part of the requirements of this NFPA document but is included for informational purposes only. This annex contains explanatory material, numbered to correspond with the applicable text paragraphs.

A.3.2.1 Approved. The National Fire Protection Association does not approve, inspect, or certify any installations, procedures, equipment, or materials; nor does it approve or evaluate testing laboratories. In determining the acceptability of installations, procedures, equipment, or materials, the authority having jurisdiction may base acceptance on compliance with NFPA or other appropriate standards. In the absence of such standards, said authority may require evidence of proper installation, procedure, or use. The authority having jurisdiction may also refer to the listings or labeling practices of an organization that is concerned with product evaluations and is thus in a position to determine compliance with appropriate standards for the current production of listed items.

A.3.2.2 Authority Having Jurisdiction (AHJ). The phrase "authority having jurisdiction," or its acronym AHJ, is used in NFPA documents in a broad manner, since jurisdictions and approval agencies vary, as do their responsibilities. Where public safety is primary, the authority having jurisdiction may be a federal, state, local, or other regional department or individual such as a fire chief; fire marshal; chief of a fire prevention bureau, labor department, or health department; building official; electrical inspector; or others having statutory authority. For insurance purposes, an insurance inspection department, rating bureau, or other insurance company representative may be the authority having jurisdiction. In many circumstances, the property owner or his or her designated agent assumes the role of the authority having jurisdiction; at government installations, the commanding officer or departmental official may be the authority having jurisdiction.

A.3.2.4 Listed. The means for identifying listed equipment may vary for each organization concerned with product evaluation; some organizations do not recognize equipment as listed unless it is also labeled. The authority having jurisdiction should utilize the system employed by the listing organization to identify a listed product.

A.4.1.1 Where tanks are to supply sprinklers, see separately published NFPA standards; also see NFPA 13.

A.4.7.2 See Figure A.4.7.2.



FIGURE A.4.7.2 Confined Space Entry Sign.

A.4.13.1 Rules for slopes can be found in 5.4.3 of AWWA D100.

A.5.2.3 For forgings intended for welding, supplementary requirements should be specified.

A.5.5.3.2 Such plate surfaces include those that are not stressed by the concentrated reaction of supporting members or riser pipes.

A.5.6.7.1 In accordance with AWWA D100, the oiled sand mixture should consist of approximately 18 gal (68 L) of No. 2 fuel oil per cubic yard (cubic meter) of sand. In practice, quantities of 6 gal to 9 gal (22.7 L to 34 L) of oil per cubic yard (cubic meter) of sand have been shown to be acceptable.

A.5.6.7.2 Suitable petroleum-base oils include No. 2 fuel oil, drain oil, or other oils of equivalent viscosity.

A.5.7.9.5.1 Wax coatings can soften and run during extreme temperatures, so that steel is not properly protected.

A.5.7.11 The following methods of corrosion protection can be used to supplement required cleaning and painting, subject to the approval of the authority having jurisdiction:

(1) A listed cathodic system of corrosion protection that is designed to protect all wetted surfaces, including those of risers, can be used. Anodes should be of suitable material and construction and should be approved by the author-

Copyright National Fire Protection Association
Provided by IHS under license with NFPA
No reproduction or networking permitted without license from IHS
Not for Resale

ity having jurisdiction. All anodes should be provided with listed containment devices to prevent any portions thereof from separating and falling. All such containment devices should be fastened securely. To ensure continued reliable operation of such cathodic protection equipment, the owner should make arrangements with the supplier for annual inspections and maintenance of the equipment.

(2) Chemical water additives that are designed to inhibit corrosion on metal surfaces can be used. The chemicals used should be nontoxic, nonstaining, and odorless. The additives should be introduced into the water that is filling the tank in the recommended proportions to maintain corrosion-resistant properties. A chemical-proportioning pump can be used for this purpose. To ensure that the proper chemical balance is maintained, semiannual chemical analysis of the water should be made.

A.6.1.1 For further information on bolted steel tanks, see AWWA D103.

A.6.2.6 Forgings intended for welding must have supplementary requirements.

A.6.5.5 The manufacturer should take precautions to prevent damage to tank components during transport. These precautions include stacking the panels on racks, physically separating the panels, separating with burlap, or otherwise protecting the panels to prevent damage to the coating.

A.7.1.5 The condition known as *air lock* can occur when a pressure tank and a gravity tank are connected into the sprinkler system through a common riser and the gravity water pressure at the gravity-tank check valve is less than the air pressure trapped in the pressure tank and common riser by a column of water in the sprinkler system after water has been drained from the pressure tank. For example, if the pressure tank is kept two-thirds full of water with an air pressure of 75 lb/in.^{2} (5.2 bar) as usual, and a sprinkler opens 35 ft (10.7 m) or more above the point where the common tank riser connects to the sprinkler system, the pressure tank drains, leaving an air pressure of 15 lb/in.^{2} (1.0 bar) that is balanced by a column of water of equal pressure [35 ft (10.7 m) head] in the sprinkler system; the gravity-tank check valve is held closed unless the water pressure from the gravity tank is more than 15 lb/in.^{2} (1.0 bar) [35 ft (10.7 m) head].

Air lock can be prevented by increasing the volume of water and decreasing the air pressure in the pressure tank so that little or no air pressure remains after the water has been exhausted. For example, if the pressure tank is kept four-fifths full of water, with an air pressure of 60 lb/in.^{2} (4.1 bar), the air pressure that remains in the tank after the water is drained is zero, and the gravity-tank check valve opens as soon as the pressure from the pressure tank of the gravity-tank check valve drops below the static head from the gravity tank.

Under normal conditions, air lock can be conveniently prevented in new equipment by connecting the gravity tank and pressure tank discharge pipes together at 45 ft (13.7 m) or more below the bottom of the gravity tank and placing the gravity-tank check valve at the level of the connection.

A.7.1.7.1 The ASME *Code* permits the fusion process of welding with certain regulations for strength, qualification of welders, and tests.

A.7.1.10.3 See Figure B.1(a).

A.7.2.3.2 See Figure B.1(a) and Figure B.1(b).

A.7.2.12 See 14.1.1.

A.8.1.3 Tanks of other sizes are built.

A.8.1.4.4 See 8.6.3.

A.8.2.2.2 Fir and red cedar deteriorate rapidly, especially if the water is overheated during the heating season. Western yellow cedar, redwood, or southern white cedar (dismal swamp) should be used, as the increased serviceability ordinarily more than offsets the slightly greater cost of the complete installation. *(See 16.1.9.)*

A.8.4.1 See Section 13.4 for unit working stresses for steel supporting construction.

A.8.5.3 *Example:* A 1 in. (25 mm) hoop that is located 13.5 ft (4.1 m) down from the top of a 22 ft (6.7 m) diameter tank. What is the allowable spacing? *[See Figure A.8.5.3(a) and Figure A.8.5.3(b).]* At the point for 13.5 ft (4.1 m) depth, follow the broken line vertically to 22 ft (6.7 m) diameter, then follow horizontally to the point for a 1 in. (25 mm) hoop diameter, then follow vertically down to the 8.9 in. (226 mm) spacing. One-half of the sum of the actual distances to the next hoop above and below should not exceed 8.9 in. (226 mm) plus the tolerance.

Tolerances: The design spacing can exceed the computed spacing by a maximum of ½ in. (12 mm). The spacing, as installed, can exceed the computed spacing by a maximum of 1 in. (25 mm). *[See Figure A.8.5.3(a) and Figure A.8.5.3(b).]*

Typical hoop schedules for standard size tanks are shown in Figure A.8.5.3(a), based on the area at the root of the cut threads.

A.8.5.3.2 See Figure A.8.5.3(b) for hoop spacing for wood tanks.

A.8.6.1 A fore plane can be used for smoothing the edges.

A.8.7.3 See Figure B.1(d).

A.9.5.1 See Figure B.1(e).

A.9.6.2.4 See Figure B.1(h).

A.11.2 See Figure A.11.2 for an example of a fiberglass tank being used under ground as a cistern to supply fire flow for fire department apparatus in a rural area.

A.11.3 The standard capacities shall be from 2,000 gal to 50,000 gal (7.6 m^3 to 190 m^3). Tanks of other capacities are permitted.

A.11.7.2 See Figure A.11.7.2 for an example of a combination vent and sight assembly, which allows the tank to stay at atmospheric pressure while allowing the user to know the water level in the tank. While these two devices are not required to be combined, it is convenient since they are both required to be above ground.

A.11.7.3 See Figure A.11.7.3.

A.11.7.4 See Figure A.11.7.4.

A.12.6.1.1 The necessary depth is usually 20 ft to 30 ft (6.1 m to 9.1 m).

A.13.1.1 Fireproofing Tank Towers. *(See Section 4.2 for locations where fireproofing is needed.)*

Fireproofing, where necessary, is usually not installed by the tank contractor. One acceptable method of fireproofing steel columns consists of concrete that is poured 2 in. (51 mm) outside all projecting steel. One method of construction is to

Copyright National Fire Protection Association
Provided by IHS under license with NFPA
No reproduction or networking permitted without license from IHS
Not for Resale

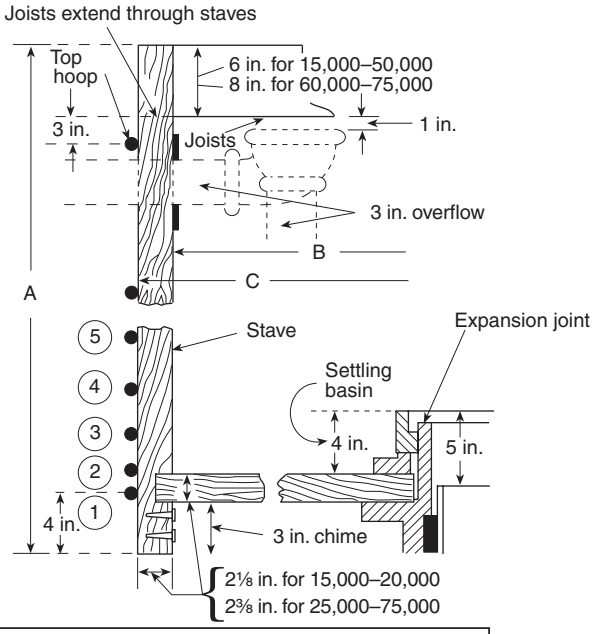

Tank Dimensions				
Net Capacity (gal)	Stave Length A	Inside Diam B	Outside Diam C	Approx. Outside Cir
15,000	14 ft 0 in.	14 ft 2½ in.	14 ft 7 in.	45 ft 9¾ in.
20,000	16 ft 0 in.	15 ft 3½ in.	15 ft 8 in.	49 ft 2¾ in.
25,000	16 ft 0 in.	17 ft ½ in.	17 ft 6 in.	54 ft 11¾ in.
30,000	18 ft 0 in.	17 ft 6½ in.	18 ft 0 in.	56 ft 6¾ in.
40,000	20 ft 0 in.	19 ft 1½ in.	19 ft 7 in.	61 ft 6¼ in.
50,000	20 ft 0 in.	21 ft 6½ in.	22 ft 0 in.	69 ft 1½ in.
60,000	20 ft 0 in.	23 ft 6½ in.	24 ft 0 in.	75 ft 4¾ in.
75,000	24 ft 0 in.	23 ft 10½ in.	24 ft 4 in.	76 ft 5¼ in.

For SI units, 1 in. = 25.4 mm; 1 ft = 0.3048 m; 1 gal = 0.00379 m³.

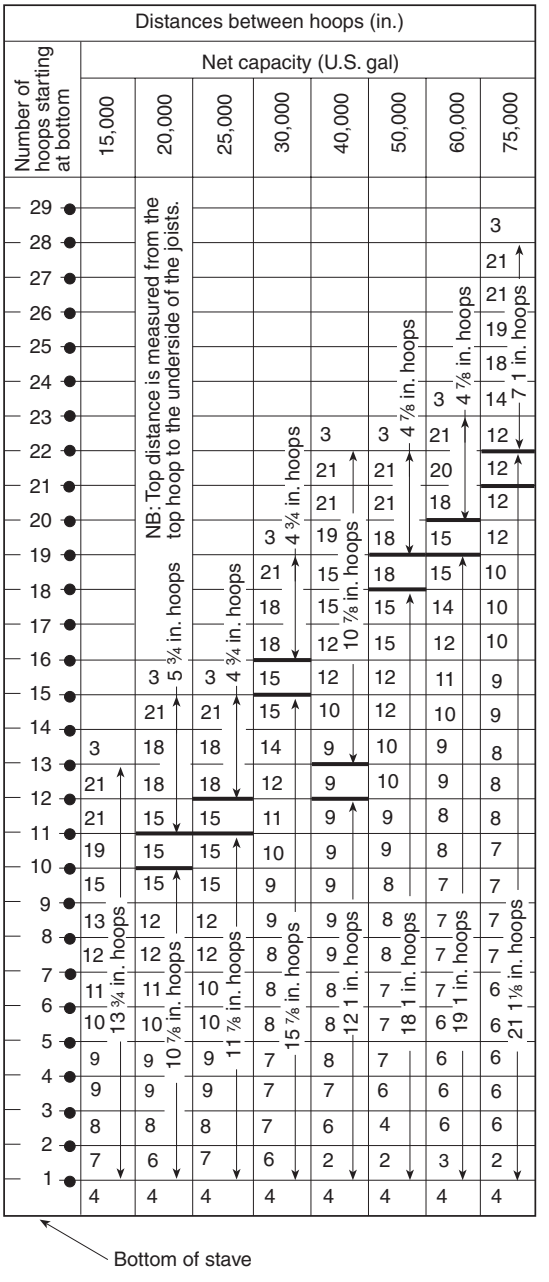

FIGURE A.8.5.3(a) Hoop Schedules for Wood Tanks (dimensions are for cylindrical tanks).

spirally wind 4.62 mm (No. 5 B & S gauge) steel wire at a pitch of 8 in. (203 mm) around the section and then to erect wooden forms that are approximately 6 ft (1.8 m) high, filling and tamping before erecting the next 6 ft (1.8 m) section.

The best coarse aggregates, arranged in order of preference, are limestone or calcareous gravel, trap rock, granite, sandstone, and hard coal cinders of less than 1 in. (25.4 mm). A 1:2:4 mixture of portland cement, clean sand, and one of the specified coarse aggregates should be used.

Another method of construction consists of winding 4 ft or 5 ft (1.2 m or 1.5 m) lengths of expanded metal around the section, the mesh taking the place of wooden forms and wire ties. The concrete should be of relatively dry consistency, however, so that it does not escape from the mesh. The mesh should be separated by approximately 1 in. (25.4 mm) from the steel by means of spacers so that the concrete completely surrounds the steel. The ends of the mesh should be lapped and securely wired together. After the concrete has set, a 1 in. (25.4 mm) layer of portland cement mortar is trowelled onto the outside of the mesh.

Ordinarily, columns are nearly vertical so that the weight of concrete fireproofing does not cause significant bending stresses. The vertical load is carried by the foundations. Where columns are significantly inclined, reinforcing bars should be placed in the concrete and should be designed so that the fireproofing is self-supporting.

Copyright National Fire Protection Association
Provided by IHS under license with NFPA
No reproduction or networking permitted without license from IHS
Not for Resale

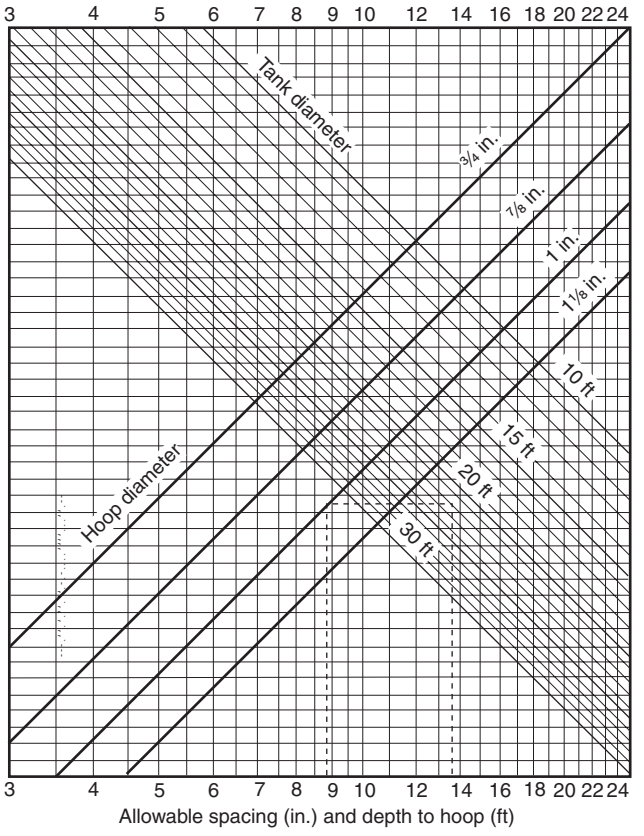

For SI units, 1 in. = 25.4 mm; 1 ft = 0.3048 m.

FIGURE A.8.5.3(b) Hoop Spacing Diagram for Wood Tanks.

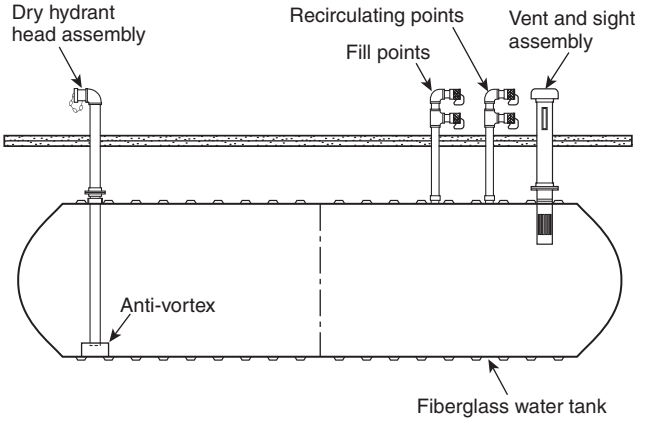

FIGURE A.11.2 Fiberglass Tank as an Underground Cistern.

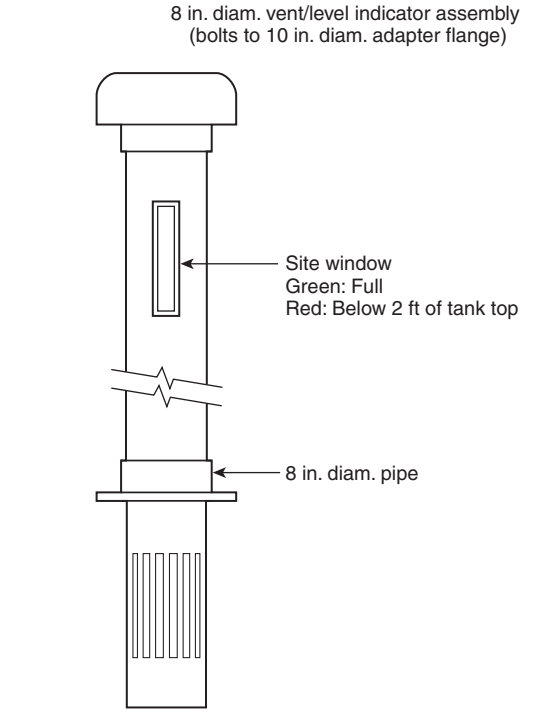

For SI units, 1 in. = 25.4 mm; 1 ft = 0.3048 m.

FIGURE A.11.7.2 Typical Combination Vent and Sight Assembly.

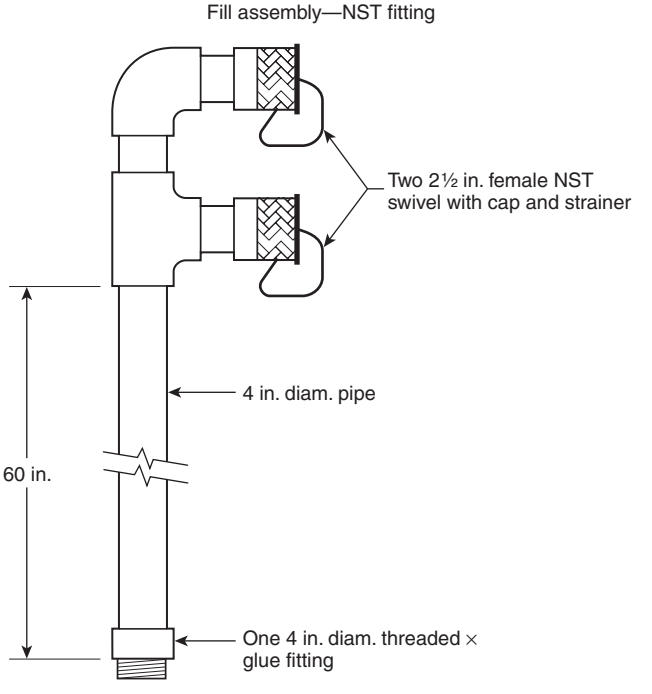

For SI units, 1 in. = 25.4 mm.

FIGURE A.11.7.3 Typical Fill Assembly.

Copyright National Fire Protection Association
Provided by IHS under license with NFPA
No reproduction or networking permitted without license from IHS
Not for Resale

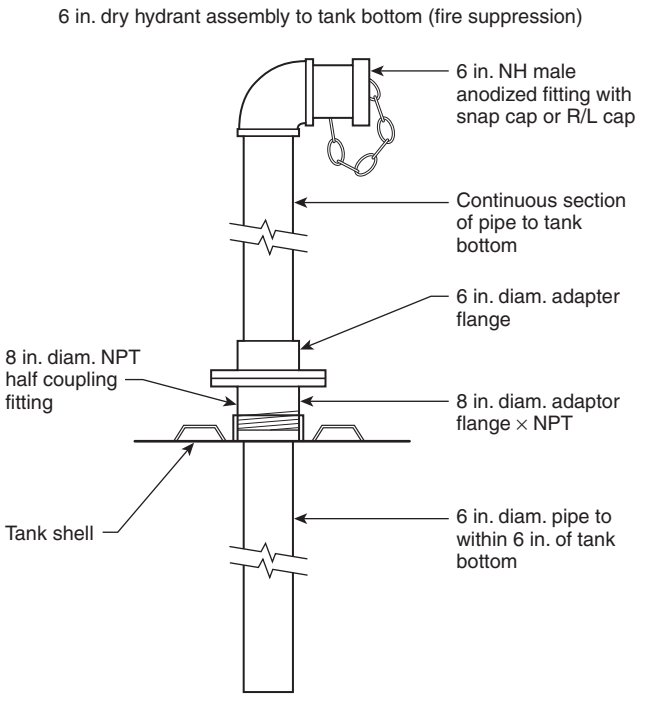

FIGURE A.11.7.4 Typical Dry Hydrant Assembly.

Fireproofing should extend continuously through the floors and roof of a building. The extreme top of the concrete should be thoroughly flashed with asphalt, including all exposed junctions between steel and concrete. Concrete surfaces exposed to freezing temperatures should be coated with special waterproof paint that is suitable for concrete surfaces to prevent spalling.

Horizontal struts and compression portal braces should also be encased in solid concrete that is poured 2 in. (51 mm) outside all projecting steel. Wooden forms and wire ties are necessary, and reinforcing rods should be located near the bottom of the section and should be designed so that the fireproofing is self-supporting. Care should be taken in designing the supports for the forms, as compression members are not usually of sufficient strength to safely resist bending. Where any of the struts are used for supporting forms, their strength should be carefully investigated by a consulting structural engineer.

Cement plaster on metal lath has not proven to be satisfactory out-of-doors or in moist locations, due to unobserved corrosion of the steel sections.

Diagonal wind rods or tension portal members are not usually fireproofed, since they are less subject to failure when heated than the compression members. Where very severe exposure exists, a weatherproof fire-resistant coating should be applied over heavily painted rods. Special care is needed to make such fireproofing watertight at turnbuckles and clevises. Concrete has been used occasionally, but wire ties or coarse rectangular mesh is necessary to prevent serious cracking and deterioration of the fireproofing.

Wooden frostproof casings are not usually fireproofed. Some casings have completely burned away from steel tanks without damaging the tower or tank but necessitating the replacement of the riser pipes. Grillage beams under a wood tank might possibly fail during a serious fire that involves the frostproof casing. Wooden casings, unless treated with a preservative, usually rot and need replacement at 8- to 14-year intervals. This period is unlikely to be lengthened by the presence of cement plaster fireproofing.

Noncombustible frostproof casings are desirable for wood tanks. In the case of steel tanks, 3 ft (0.91 m) diameter steel risers are satisfactory and do not require fireproofing. In the case of high risers, it is necessary to strengthen the valve pit roof.

Alternate protection for tank towers in lieu of concrete may consist of open sprinklers where water supplies are sufficient and watch service and other conditions are satisfactory to the authority having jurisdiction.

A.13.7.6 The interior of hermetically sealed surfaces, including such tubular columns, should not need to be painted.

A.14.1 For embankment-supported coated fabric suction tanks, see Section 9.6.

A.14.1.3 Wood tanks can be extensively damaged by shrinkage if left empty after they are erected.

A.14.1.6 One of the chief advantages of the gravity circulation system of heating tanks is that it enables convenient observation of the temperature of the coldest water at a thermometer located in the cold-water return pipe near the heater. Failure to provide an accurate thermometer at this point or failure to observe it daily and ensure that it registers the proper temperature forfeits this advantage and can result in the freezing of the equipment. *[See Figure 16.1.7.5.5(a) and Figure 16.1.7.5.5(b), Figure B.1(i) through Figure B.1(k), and Figure B.1(s), Figure B.1(t), and Figure B.1(v).]*

A.14.1.7 The circulation of water through the tank causes an accumulation of sediment that can obstruct the piping or sprinklers. A leak or break in a pipe for use other than fire protection may seriously impair the fire protection by partly or completely draining the elevated tank.

A.14.1.8 Water-Level Gauges. The following information is provided for existing installations where mercury gauges are in use. Mercury gauges are no longer permitted for new installations.

(1) *Mercury Gauge Materials.* Pipe and fittings that contain mercury should be iron or steel. Brass, copper, or galvanized parts, if in contact with mercury, are amalgamated, and leaks result.
(2) *Water Pipe.* The water pipe to the mercury gauge should be 1 in. (25 mm) galvanized throughout and connected into the discharge pipe on the tank side of the check valve. Where possible, the pipe should be short, should be run with a continual upward pitch toward the tank piping, and should be without air pockets to avoid false readings. The pipe should be buried well below the frost line or located in a heated conduit.
(3) *Valves.* The valve at the mercury gauge should be a listed OS&Y gate valve. An additional listed OS&Y gate valve should be installed close to the discharge pipe where the distance to the mercury gauge exceeds 50 ft (15.2 m).
(4) *Mercury Catcher.* Occasionally, fluctuating water pressures require a mercury catcher at the top of the gauge glass to prevent loss of mercury. The catcher is not a standard part of the equipment and is not furnished by the gauge manufacturer unless specially ordered.

--`,,```,,,,````-`-`,,`,,`,`,,`---
Copyright National Fire Protection Association
Provided by IHS under license with NFPA
No reproduction or networking permitted without license from IHS
Not for Resale

(5) *Extension Piece.* Where the mercury catcher is not needed, it can be replaced by approximately a 3 ft (0.91 m) extension of ⅛ in. (3 mm) pipe, vented at the top.

(6) *Water-Drain Plug.* A plugged tee should be provided in the mercury pipe between the mercury pot and the gauge glass to allow water that sometimes accumulates on top of the mercury column to drain off.

(7) *Location.* The gauge should be installed in a heated room such as a boiler room, engine room, or office, where it is readily accessible for reading, testing, and maintenance. It should be so located that it is not liable to break or to be damaged.

The column of mercury, extending from the mercury pot to the top, is roughly 1/13 the height from the mercury pot to the top of the tank. This fact should be considered when planning a location for the instrument.

(8) *Cleaning.* Before installing the gauge, all grease, dirt, and moisture should be removed from the pot and piping that are to contain mercury, and it should be ensured that the mercury itself is clean. Warm water that contains a small amount of washing soda is a good cleaning agent.

(9) *Installing.* The gauge should be accurately installed so that when the tank is filled to the level of the overflow, the mercury level is opposite the FULL mark on the gauge board.

(10) *Testing.* To determine that it is accurate, the instrument should be tested occasionally as follows:

(a) Overflow the tank.

(b) Close the OS&Y valve. Open the test cock. The mercury should quickly drop into the mercury pot. If it does not, there is an obstruction that must be removed from the pipe or pot between the test cock and the gauge glass.

(c) If the mercury lowers at once, as expected, close the test cock and open the OS&Y valve. If the mercury responds immediately and comes to rest promptly opposite the FULL mark on the gauge board, the instrument is operating properly.

(d) If the mercury column does not respond promptly and read correctly during the test specified in A.14.1.8(10)(c), there are probably air pockets or possibly obstructions in the water-connecting pipe. Open the test cock. Water should flow out forcefully. Allow water to flow through the test cock until all air is expelled and rusty water from the tank riser appears. Then close the test cock. The gauge should now read correctly. If air separates from the water in the 1 in. (25 mm) pipe due to being enclosed in a buried tile conduit with steam pipes, the air can be automatically removed by installing a ¾ in. (19 mm) air trap at the high point of the piping. The air trap can usually be best installed in a tee connected by a short piece of pipe at a location between the OS&Y valve and the test cock, using a plug in the top of the tee, so that mercury can be added in the future, if necessary, without removing the trap. If there are inaccessible pockets in the piping, such as locations below grade or under concrete floors, the air can be removed only through the test cock.

(e) If, in the test specified in A.14.1.8(10)(d), the water does not flow forcefully through the test cock, there is an obstruction that must be removed from the outlet of the test cock or from the waterpipe between the test cock and the tank riser.

(f) If there is water on top of the mercury column in the gauge glass, it will cause inaccurate readings and must be removed. First lower the mercury into the pot as in the test specified in A.14.1.8(10)(b). Close the test cock and remove the plug at the base of the mercury gauge. Open the OS&Y valve very slowly, causing mercury to rise slowly and the water above it to drain through the plug at the base of the mercury gauge. Close the OS&Y valve quickly when mercury appears at the outlet at the base of the mercury gauge, but have a receptacle ready to catch any mercury that drains out. Replace the plug. Replace any escaped mercury in the pot by removing the plug between the OS&Y valve and the test cock, and with the OS&Y valve closed, fill the pot with mercury to the mark on the cover corresponding to the height above the pot that indicates the full water level in the tank. Replace the plug.

(g) After testing leave the OS&Y valve open, except as noted in A.14.1.8(11).

(11) *Excessive Water Pressures.* If found necessary, to prevent forcing mercury and water into the mercury catcher, the controlling OS&Y valve may be closed when filling the tank but should be left open after the tank is filled, except when the gauge is subjected to continual fluctuation of pressure, when it may be necessary to keep the gauge shut off, except when it is being read. Otherwise it may be necessary to frequently remove water from the top of the mercury column as in A.14.18(10).

A.14.1.9 The insulating qualities of frostproof casing are seriously impaired if joints spring open, if the casing settles away from the tank, or if rotting occurs around the base.

A.14.1.10.1 By heating the large steel-plate riser pipes, the fire hazard and upkeep of the frostproof casing and the provision of an expansion joint or walkway are avoided. However, painting and heating the larger riser and building the stronger and larger valve pit cost more than the equipment for smaller risers.

A blow-off valve is sometimes furnished near the base of the larger riser.

A check valve and gates in the discharge pipe, filling arrangement, overflow, and drain are generally provided.

A.14.2.13.2 Large, standard size anti-vortex plates [48 in. × 48 in. (1219 mm × 1219 mm)] are desirable, as they are adequate for all sizes of pump suction pipes normally used. Smaller plates may be used; however, they should comply with 14.2.13

A.14.2.13.3 See Figure B.1(o).

A.14.5.3 On column-supported tanks with outside overflow, vertical extensions of the pipe that is located below the balcony are not recommended, as they can become plugged with ice.

A.14.5.4.2 See 14.1.12.

A.14.6.3.6 See Figure B.1(k).

A.14.6.4.5 See Figure B.1(i).

A.14.7.1 The use of an elevated tank, in part, for purposes other than fire protection, is not advised. Frequent circulation of the water results in an accumulation of sediment that can obstruct the piping of sprinklers, and a fluctuating water level hastens decaying of wood and corrosion of steel.

Copyright National Fire Protection Association
Provided by IHS under license with NFPA
No reproduction or networking permitted without license from IHS
Not for Resale

A.14.7.2.4 See 14.3.8.

A.14.7.3 See 14.1.1.

A.14.8 It is not the intent of this standard to require the electronic supervision of tanks; however, where such supervision is required in accordance with *NFPA 72*, the following alarms should be required:

(1) Water temperature below 40°F (4.4°C)
(2) Return of water temperature to 40°F (4.4°C)
(3) Water level 3 in. (76.2 mm) (pressure tanks) or 5 in. (127 mm) (all other tanks) below normal
(4) Return of water level to normal
(5) Pressure in pressure tank 10 psi (0.48 kPa) below normal
(6) Pressure in pressure tank 10 psi (0.48 kPa) above normal

A.15.1.2 Insulation Materials. Installation and use of insulating materials should be as follows.

(1) *Insulation Construction.* Layers of listed insulation should be constructed as follows:
   (a) Remove all rust from the pipes with wire brushes and apply two coats of red lead paint using the mixture specified in 5.7.11 or a listed paint.
   (b) Wrap all pipes together with waterproof building paper applied over hardwood cleats equal in thickness to the projections of pipe flanges or couplings.
   (c) Apply alternate wrappings of 1 in. (25.4 mm) insulation and waterproof building paper using the number of layers that are equivalent in insulating value to the wooden casings specified in A.15.1.2(2) and finishing with building paper.
   (d) Provide an outer covering of painted 8 oz (0.227 kg) canvas that is securely bound with No. 16 (1.29 mm) copper wire with windings not over 1 ft (0.305 m) apart, or secure by sewing. This type of casing is likely to settle and expose the pipes at the top of the insulation unless it is adequately secured to the pipes and the tank bottom. Approval of the use of insulating materials should be obtained from the authority having jurisdiction. Insulating materials between inner and outer layers of wood or metal can be used after obtaining the approval of the authority having jurisdiction. Such casings should be watertight and should conform to other subsections of this section as applicable. Recommendations for insulated metal casings are shown in Figure B.1(r). Absorbent insulating materials should not be placed in direct contact with iron or steel pipes. In the case of low towers, brick casings with 1 in. (25.4 mm) air spaces between four 4 in. (102 mm) walls and bonded together with frequent headers supported on concrete foundations have proven satisfactory in very cold climates.

      Closed cellular insulation (foam glass, polystyrene, or polyurethane) or fiberglass insulation in the thicknesses listed in A.15.1.2(2) are acceptable. Foam glass and fiberglass should have a heavy, vapor-repellent paper wrapper (or other suitable material) enclosing each section. Where any of these materials are weather exposed, the insulation should be jacketed with weather-resistant material.

      Other insulating materials may be used with the approval of the authority having jurisdiction.
(2) *Insulation Classification and Limitation.* Recommendations for insulation and classification limitations are as follows:
   (a) Wooden frostproof casings and insulated metal frostproof casings *[see Figure B.1(r)]* are intended for weather-exposed pipes. Each of these casings can protect multiple piping systems. The first paragraph of A.15.1.2 regulates the wrapping of insulation around multiple weather-exposed pipes. Single weather-exposed pipes may be protected by jacketed (weather-resistant), closed cellular, or fiberglass insulations.
   (b) Closed cellular or fiberglass material without weather guards is suitable for insulating individual pipes in unheated buildings, dry risers of elevated tanks, or other weather-protected areas.
   (c) Table 15.1.2.4 specifies the minimum thickness of various materials or types of construction.
(3) *Wood Preservatives.* The lumber used in wooden frostproof casings is subject to rotting. Treatment of the lumber with a suitable preservative, such as sodium fluoride, creosote, or even zinc chloride, is recommended.

A.15.1.3.3 Ordinarily a pit 7 ft × 6 ft × 9 ft (2.1 m × 1.8 m × 2.7 m) is of sufficient size.

A.15.1.8 Where suitable drainage cannot be achieved, an injector is sometimes advisable.

A.16.1 Examples. Typical examples of tank heating systems are as follows:

(1) *Size of Water Heater for an Elevated Tank.* Given a 75,000 gal (283.88 m^3) steel tank with an insulated riser pipe and 2370 ft^2 (220 m^2) of radiating surface in Duluth, Minnesota, what heater capacity would be needed? If the tank were wood, what heater capacity would be needed?

   The lowest one-day mean temperature from Figure 16.1.4 is –28°F (–33.3°C). Interpolating from Table 16.1.4(a), the heat loss for a typical tank is approximately 659,000 Btu/hr (193 kW).

   A heater should be capable of delivering 659,000 Btu/hr (193 kW) under field conditions. Table 16.1.7.1 indicates that the size of the water-circulating pipe is at least 2½ in. (60 mm).

   For a wood tank with these same specifications, Table 16.1.4(b) indicates a maximum heat loss of approximately 254,000 Btu/hr (74.4 kW), and the heater installed should be capable of delivering this amount of heat. Table 16.1.7.1 indicates that the size of the water-circulating pipe should be at least 2 in. (50 mm).
(2) *Large-Diameter Steel Riser.* If the steel tank in A.16.1(1) has 100 ft (30.5 m) of 3 ft (0.91 m) diameter unprotected steel riser instead of a small insulated riser pipe, it may be heated by a circulating heater that is arranged as shown in Figure B.1(t) and Figure B.1(v) or by a pipe radiator as shown in Figure B.1(u) and Figure 16.3.6.11.1.

   Using Table 16.1.4(a), the heat loss is 659,000 Btu/hr (193 kW), as determined in A.16.1(1), plus approximately 2057 × 100 = 205,700 Btu/hr (60.3 kW) additional for the riser, for a total of approximately 861,700 Btu/hr (252 kW). A water heater should be capable of delivering this much heat.

   For a pipe radiator, the heat transfer for 15 $lb/in.^2$ (1.0 bar) steam is 22,000 $Btu/hr/ft^2$ (69.4 kW/m^2) from Table A.16.1. The required radiating surface is 864,700 Btu/hr (253.2 kW) divided by 22,000 $Btu/hr/ft^2$ (69.4 kW/m^2), or 39.3 ft^2 (3.65 m^2).

Copyright National Fire Protection Association
Provided by IHS under license with NFPA
No reproduction or networking permitted without license from IHS
Not for Resale

Using Table A.16.2, approximately 33 ft 6 in. (10.2 m) of 4 in. (100 mm) pipe provides the required number of square feet of heating surface. For this length, the pipe sleeve arrangement shown in Figure B.1(v) and Figure 16.3.6.11.1 should be used; otherwise, it is necessary to use approximately 67 ft (20.4 m) of 4 in. (100 mm) pipe to reach two-thirds of the riser height.

Table A.16.1 Approximate Heat Transfer from Coils and Pipe Radiators When Coldest Water Is Just Safely above Freezing

Steam Pressure		Heat Transfer (steam to water)	
lb/in.^{2}	kPa	Btu/hr/ft^2	kW/m^2
10	69	19,500	61.5
15	103	22,000	69.4
20	138	24,500	77.3
30	207	29,500	93.0
40	276	34,500	108.8
50	345	39,000	123.0

Note: These values should not be used to determine the area of coil needed in a circulating heater.

A.16.1.2 Determination of Heater Capacity — General. To prevent freezing in any part of the tank equipment during the coldest weather that can occur, the heating system should replace the heat lost from the tank and piping when the temperature of the coldest water is safely above the freezing point and the mean atmospheric temperature for one day is at its lowest for the locality being considered.

A.16.1.2.1 Atmospheric Temperature. Figure 16.1.4 shows isothermal lines that indicate the lowest mean temperature for one day that has ever been officially recorded at any point in the United States or southern Canada. This map has been compiled from official records and can be used with reasonable accuracy to determine the lowest mean temperature for one day that can be expected to occur.

A.16.1.2.2 The low water temperature alarm should be connected to the local proprietary alarm system or to a listed central station supervisory service.

A.16.1.3 Choice of Circulating Heaters. To select a suitable circulating heater, first obtain from Figure 16.1.4 the lowest mean atmospheric temperature for one day that may occur at the locality in question; then determine the total heat loss from the tank equipment in British thermal units (kilowatts) per hour from Table 16.1.4(a) for an elevated steel tank, from Table 16.1.4(b) for an elevated wood tank, from Table 16.1.4(c) for a steel suction tank or standpipe, or from Table 16.1.4(d) for an embankment-supported coated fabric suction tank. The heater installed should have sufficient capacity to deliver, under actual field conditions, an amount of heat that is equivalent to that lost from the tank equipment. A steam water heater should be planned with due consideration of the steam pressure available. Other heaters should be planned for the particular kind of fuel to be used.

A.16.1.4 Heat Losses. Table 16.1.4(a) through Table 16.1.4(h) specify the heat losses from uninsulated elevated steel tanks, elevated wood tanks, steel suction tanks and standpipes, embankment-supported coated fabric suction tanks, insulated steel gravity tanks, and insulated steel suction tanks, respectively, for common sizes exposed to various atmospheric temperatures of 35°F to –60°F (1.7°C to –51.1°C). The losses are indicated in the British thermal units per hour (kilowatts) that are lost from the entire tank equipment when the temperature of the coldest water is safely above the freezing point, and represent the British thermal units per hour that the heating system should supply when the atmospheric temperature is within the range provided by the tables.

A.16.1.5 Heater pipes should be replaced as conditions warrant. Historically, the life cycle is 10 years. It is generally more economical to replace pipes during routine maintenance.

A.16.1.7 Typical installation arrangements for heater water-circulating pipes are shown in Figure B.1(s) through Figure B.1(v), Figure 16.3.6.10.3, and Figure 16.3.6.11.1.

A.16.1.9.1 A recording thermometer with the sensitive bulb inserted in the coldest water is a valuable accessory that provides a constant record of water temperatures and ensures more careful supervision by the management.

A.16.2 Recommendations for Gravity Circulation Heating. Gravity circulation allows convenient observation of the coldest water temperatures at a thermometer in the cold-water return pipe and is dependable and economical when correctly planned. Cold water received through a connection from the discharge pipe or from near the bottom of a suction tank or standpipe is heated and rises through a separate hot-water pipe into the tank.

Water has its maximum density at 39.2°F (4°C). When the temperature of the water falls below 39.2°F (4°C), a water inversion occurs and the warmer water settles to the bottom of the tank while the colder water rises. Therefore, if the circulation heater is to be fully effective, sufficient heat should be provided so that the temperature of the coldest water is maintained above 42°F (5.6°C) to prevent inversion. *(See Table A.16.2.)*

A.16.2.1 A water circulating pump can be used in a bypass line to improve the efficiency of the gravity circulation heating system. However, the heater size should be based on gravity circulation to provide heat loss as determined by Table 16.1.4(a) through Table 16.1.4(h). The circulating-water pump should be controlled by an outside thermostat that is designed to start the pump when the outside temperature drops to 40°F (4.4°C).

A.16.3.1 Steam Coils and Radiators. An adequate area of heating surface in steam coils and pipe radiators can also be determined with reasonable accuracy by dividing the heat loss determined, as specified in A.16.1.4, by the heat transfer in British thermal units per hour per square foot for the steam pressure available, as specified in Table A.16.1. The result is the number of square feet of heating surface in standard pipe sizes of various lengths and allows a convenient means of determining the required length of a coil or pipe radiator. Steam pressures of less than 10 lb/in.^{2} (0.7 bar) should never be used for coils or pipe radiators unless special provision, such as an auxiliary trap or drip in the steam-supply pipe, is made to drain out the condensate at the low point of the steam-supply branch line to the heater. The average efficiencies of heaters and the heat content of fuels are specified in Table A.16.3.1.

Heaters designed so that water passes through the tubes or coils surrounded by steam are practical for ease of cleaning.

Copyright National Fire Protection Association
Provided by IHS under license with NFPA
No reproduction or networking permitted without license from IHS
Not for Resale

Table A.16.2 Square Feet of Heating Surface in Coils or Pipe Radiators of Various Lengths

Length (ft)	Pipe Size (in.)										
	¾	1	1¼	1½	2	2½	3	3½	4	5	6
1	0.275	0.346	0.434	0.494	0.622	0.753	0.916	1.048	1.175	1.455	1.739
10	2.7	3.5	4.3	4.9	6.2	7.5	9.2	10.5	11.8	14.6	17.4
15	4.1	5.2	6.5	7.4	9.3	11.3	13.7	15.7	17.6	21.8	26.1
20	5.5	6.9	8.7	9.9	12.5	15.0	18.3	21.0	23.5	29.1	34.8
25	6.9	8.6	10.9	12.3	15.6	18.8	22.9	26.2	29.3	36.3	43.5
30	8.3	10.4	13.0	14.8	18.7	22.5	27.5	31.4	35.3	43.6	52.1
35	9.6	12.1	15.2	17.3	21.8	26.3	32.0	36.7	41.1	50.9	60.8
40	11.0	13.8	17.4	19.8	24.9	30.1	36.6	41.9	47.0	58.2	69.5
45	12.4	15.6	19.5	22.2	28.0	33.8	41.2	47.2	52.9	65.5	78.2
50	13.8	17.3	21.7	24.7	31.1	37.6	45.8	52.4	58.7	72.7	87.0
55	15.1	19.1	23.8	27.2	34.2	41.4	50.4	57.6	64.6	80.0	95.7
60	16.5	20.8	26.0	29.6	37.3	45.2	55.0	62.8	70.5	87.3	104.3
65	17.9	22.5	28.2	32.1	40.4	49.0	59.5	68.1	76.4	94.6	
70	19.2	24.2	30.4	34.6	43.5	52.7	64.1	73.3	82.3	101.9	
75	20.6	26.0	32.6	37.1	46.6	56.5	68.7	78.5	88.2		
80	22.0	27.7	34.7	39.5	49.8	60.2	73.2	83.8	93.0		
85	23.4	29.4	36.8	42.0	52.9	63.0	77.8		99.9		
90	24.7	31.2	39.0	44.5	56.0	67.8	82.4		105.8		
95	26.1	32.9	41.2	46.9	59.1	71.5	87.0				
100	27.5	34.6	43.4	49.4	62.2	75.3	91.6				

Note: For SI units, 1 in. = 25.4 mm; 1 ft = 0.3048 m; 1 ft^2 = 0.0929 m^2.

Table A.16.3.1 Average Efficiencies of Heaters and Heat Content of Fuels

Type of Heater	Average Efficiency (%)	Fuel	Average Heat Content	
			Btu	MJ
Steam heaters, coils, etc.	95	Anthracite coal (per lb)	13,300	30.9
Electric heaters	95	Bituminous coal, high grade (per lb)	13,200	30.7
Boilers (fuel oil)	70	Bituminous coal, medium grade (per lb)	12,000	27.9
Boilers (coal)	70	Bituminous coal, low grade (per lb)	10,300	23.9
Gas water heaters	70	Fuel oil (per lb)	19,000	44.2
		Gas, natural [per ft^3 (m^3)]	1,100	41.0
		Gas, artificial [per ft^3 (m^3)]	600	22.4
Coal-burning water heaters	40 to 60	Electricity (per kWh)	3,415	3.6

Note: For SI units, 1 lb = 0.454 kg; 1 ft^3 = 0.0283 m^3.

A.16.3.6.1 A vertical steam radiator, as shown in Figure B.1(u), but without the open-ended pipe sleeve around the radiator heater, is reasonably well adapted to heating elevated tanks with larger risers for tower heights under 100 ft (30.5 m) *(see 13.1.2)*, suction tanks, and standpipes.

A.17.1.2 This joint inspection reasonably ensures that there are no defects in the work of sufficient importance to prevent the system from being put into service immediately. The inspection also permits the owner's representatives to become more familiar with the system and equipment.

A.17.4 Care should be taken when retorquing bolts in leaking areas. Overtorqued bolts can cause linings to crack, to splinter, or to be otherwise damaged. Manufacturers' recommendations for the repair or replacement of panels should be followed.

Copyright National Fire Protection Association
Provided by IHS under license with NFPA
No reproduction or networking permitted without license from IHS
Not for Resale

Annex B Typical Installations

This annex is not a part of the requirements of this NFPA document but is included for informational purposes only.

B.1 General. Figure B.1(a) through Figure B.1(x) are included in this annex for illustrative purposes only. They are intended to represent relative locations of components and connections and general details of water tank construction.

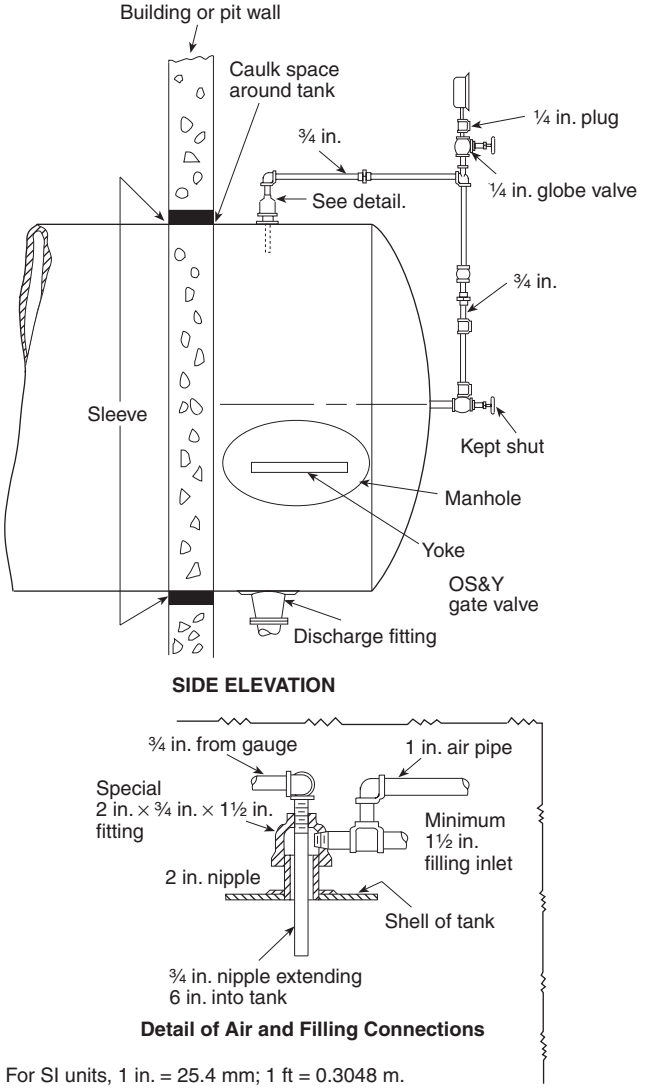

FIGURE B.1(a) Pipe Connections to Pressure Tanks.

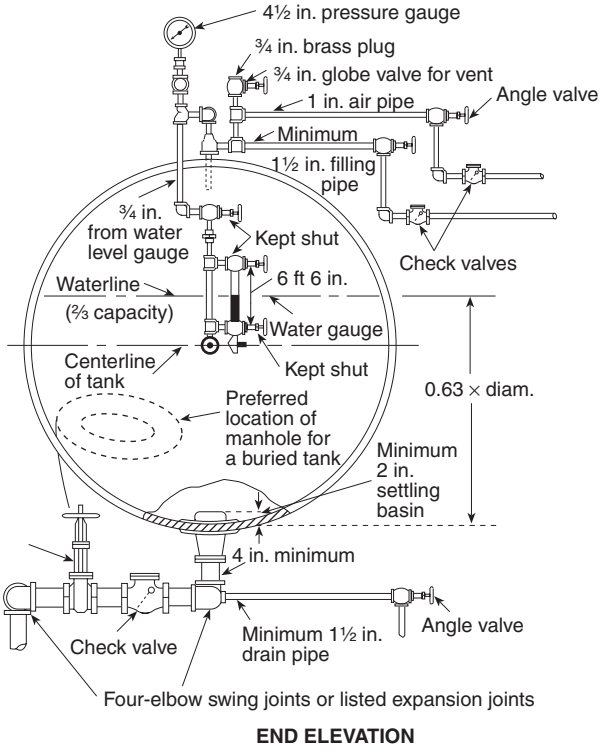

Copyright National Fire Protection Association
Provided by IHS under license with NFPA
No reproduction or networking permitted without license from IHS
Not for Resale

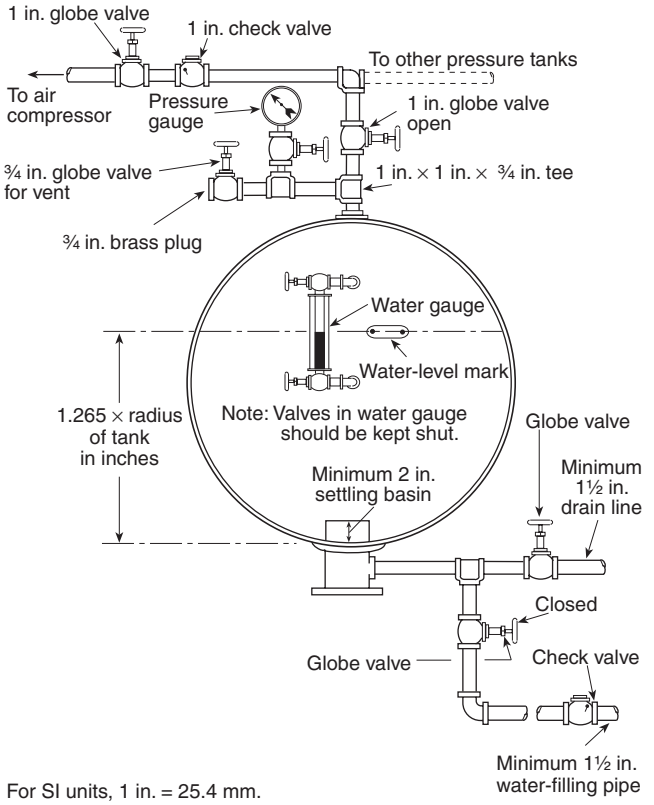

For SI units, 1 in. = 25.4 mm.

FIGURE B.1(b) Alternate Connections for Pressure Tanks.

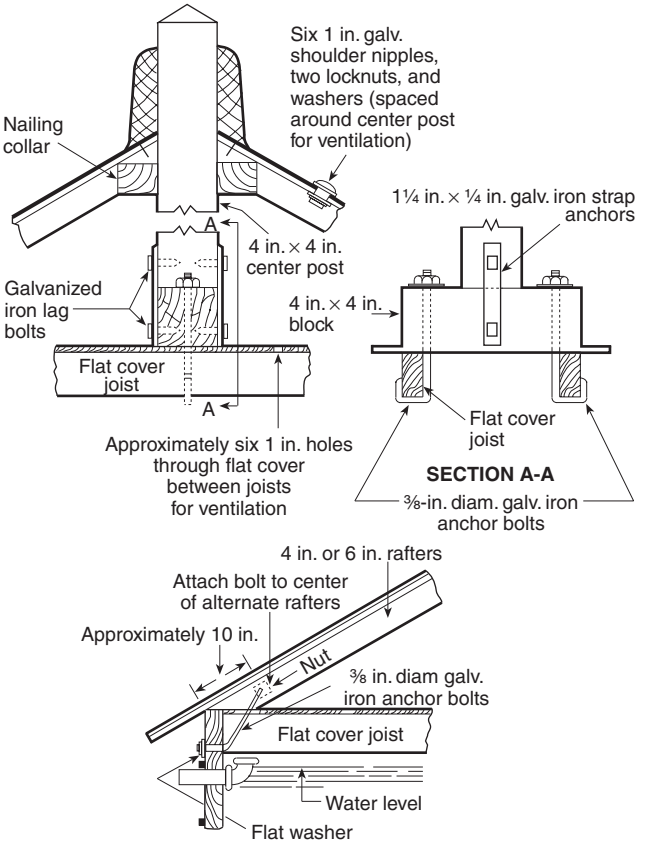

For SI units, 1 in. = 25.4 mm.

FIGURE B.1(c) Details of Tank Roof Construction.

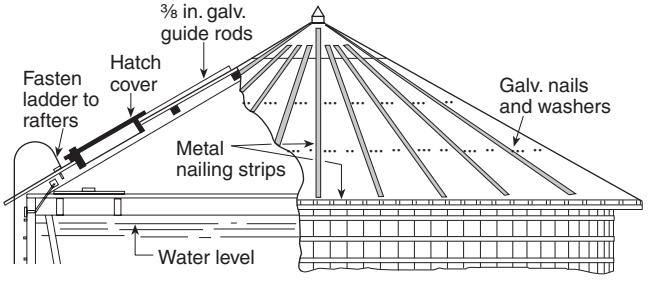

For SI units, 1 in. = 25.4 mm.

FIGURE B.1(d) Section of Conical Roof.

Copyright National Fire Protection Association
Provided by IHS under license with NFPA
No reproduction or networking permitted without license from IHS
Not for Resale

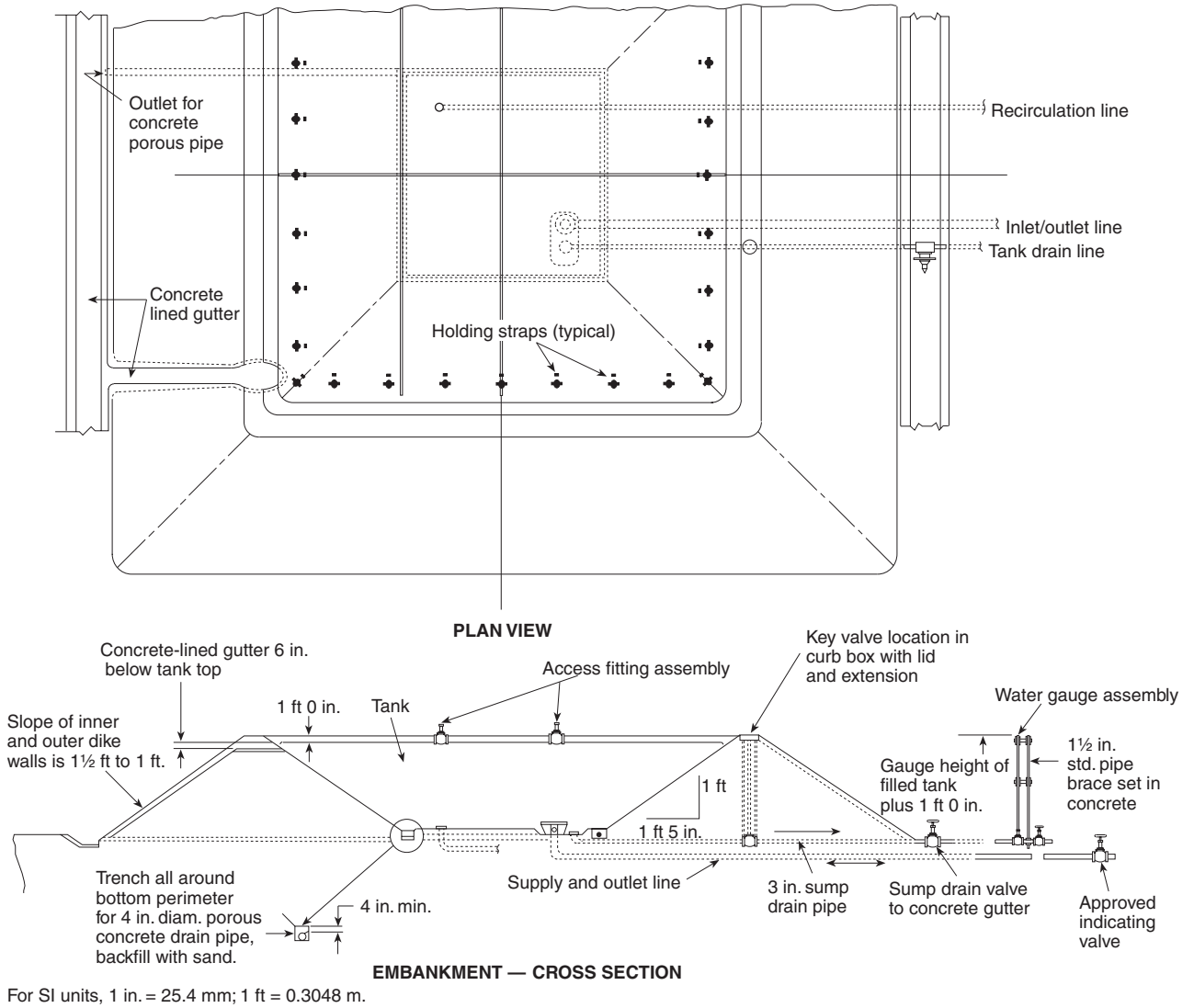

For SI units, 1 in. = 25.4 mm; 1 ft = 0.3048 m.

FIGURE B.1(e) Typical Installation Details of an Embankment-Supported Coated Fabric Suction Tank, Including Fittings.

Copyright National Fire Protection Association
Provided by IHS under license with NFPA
No reproduction or networking permitted without license from IHS
Not for Resale

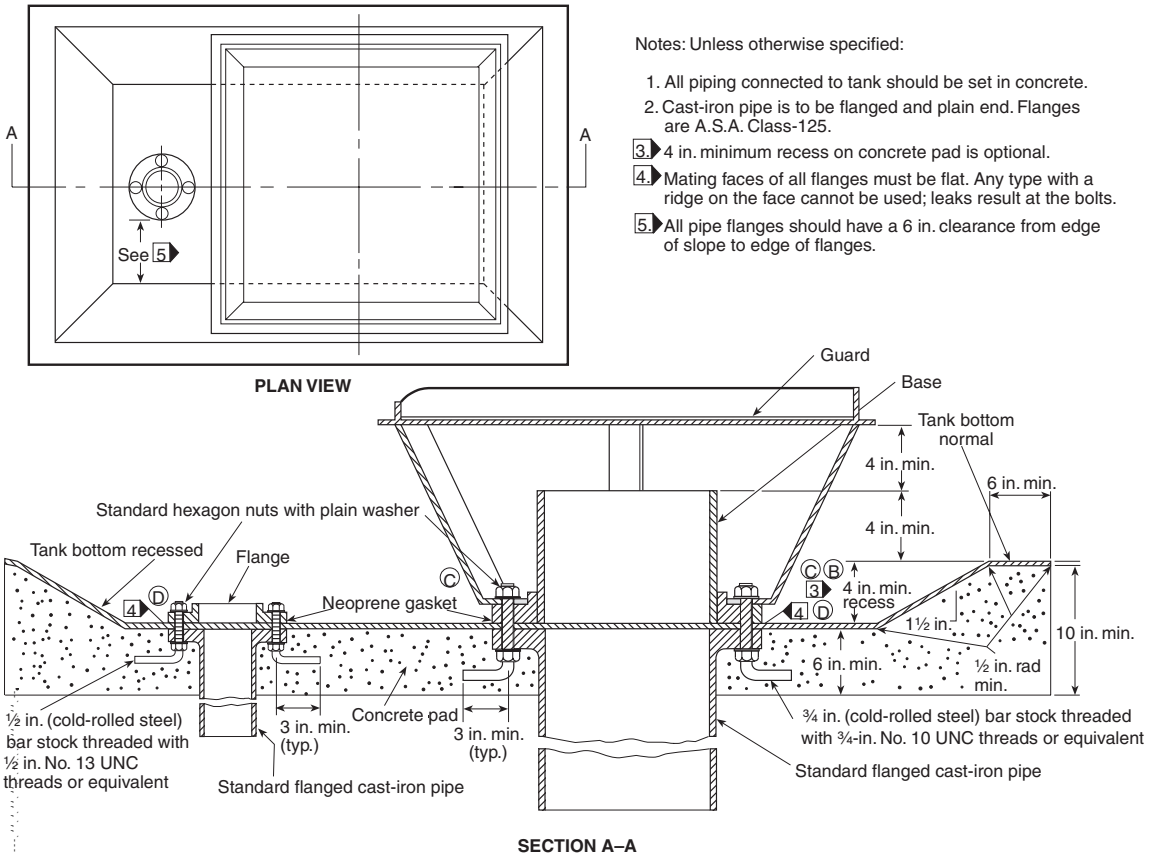

FIGURE B.1(f) Inlet-Outlet Fitting Assembly, Vortex Plate Assembly, and Sump Drain Fitting for Embankment-Supported Coated Fabric Suction Tank.

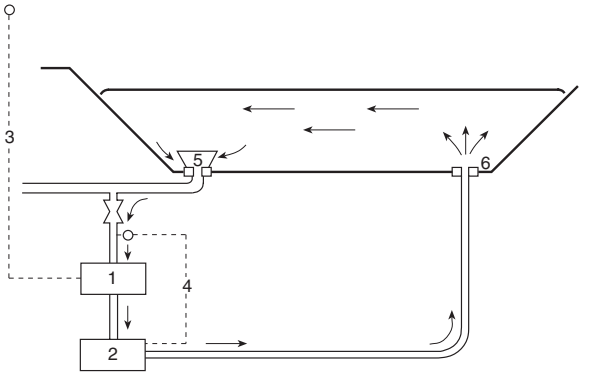

1. Recirculation pump
2. Heat exchanger
3. Unit sensing atmosphere temperature starts pump and water recirculation, enabling heat stored in ground to transfer into water at higher rate
4. Unit sensing water temperature starts heat exchanger when required
5. Inlet/outlet fitting
6. Recirculation fitting

FIGURE B.1(g) Embankment-Supported Coated Fabric Suction Tank Recirculation and Heating Schematic.

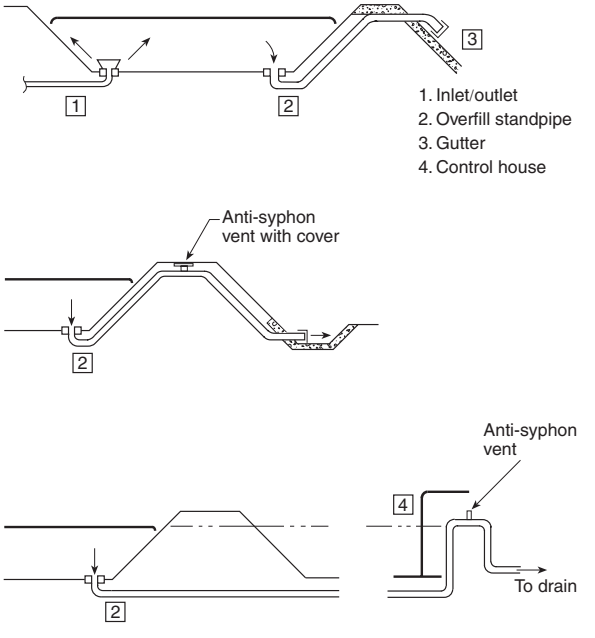

FIGURE B.1(h) Embankment-Supported Coated Fabric Suction Tank Overfill Standpipe Alternates — Protected from Freezing.

Copyright National Fire Protection Association
Provided by IHS under license with NFPA
No reproduction or networking permitted without license from IHS
Not for Resale

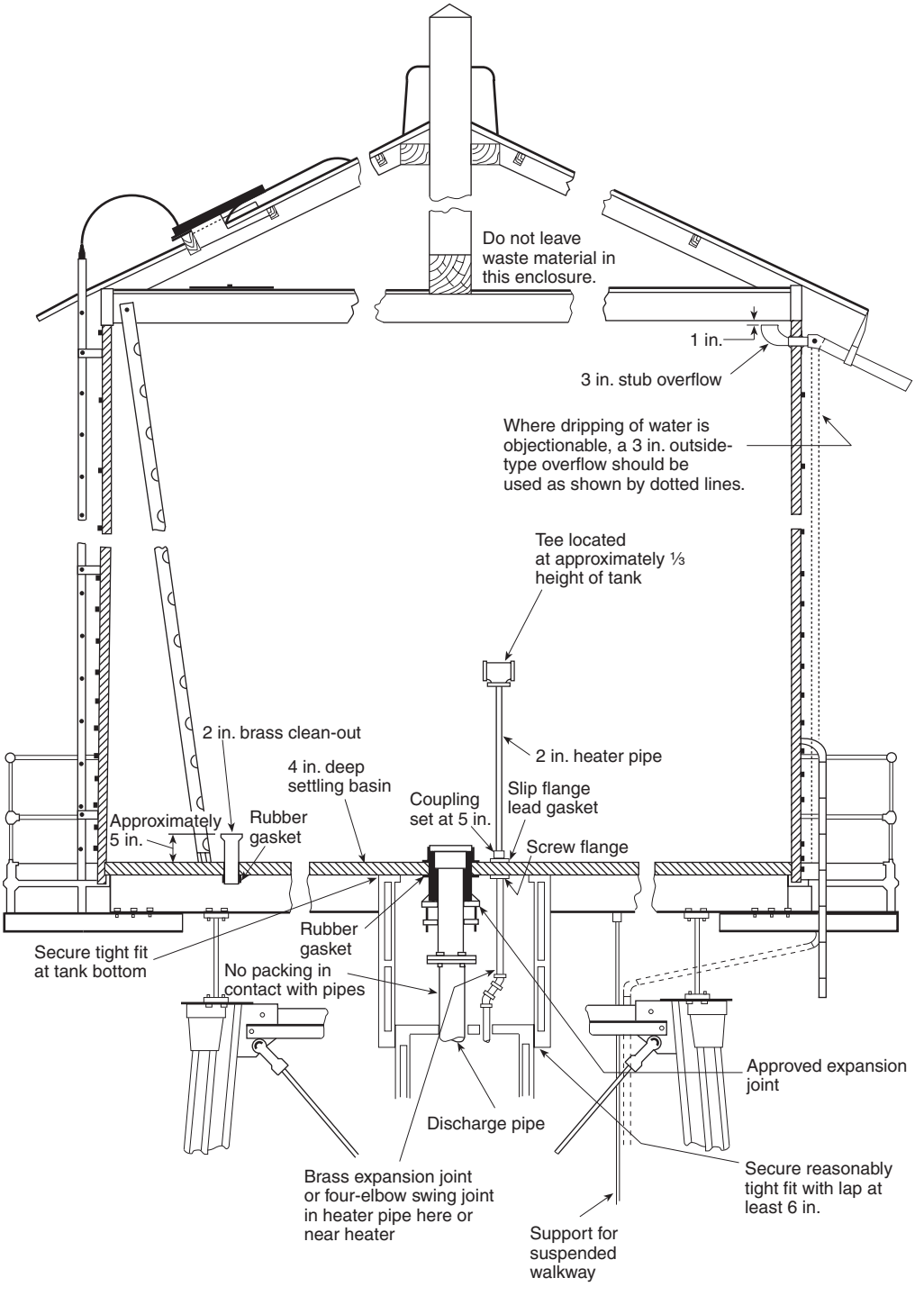

For SI units, 1 in. = 25.4 mm.

FIGURE B.1(i) Typical Tower-Supported Wood Tank.

Copyright National Fire Protection Association
Provided by IHS under license with NFPA
No reproduction or networking permitted without license from IHS
Not for Resale

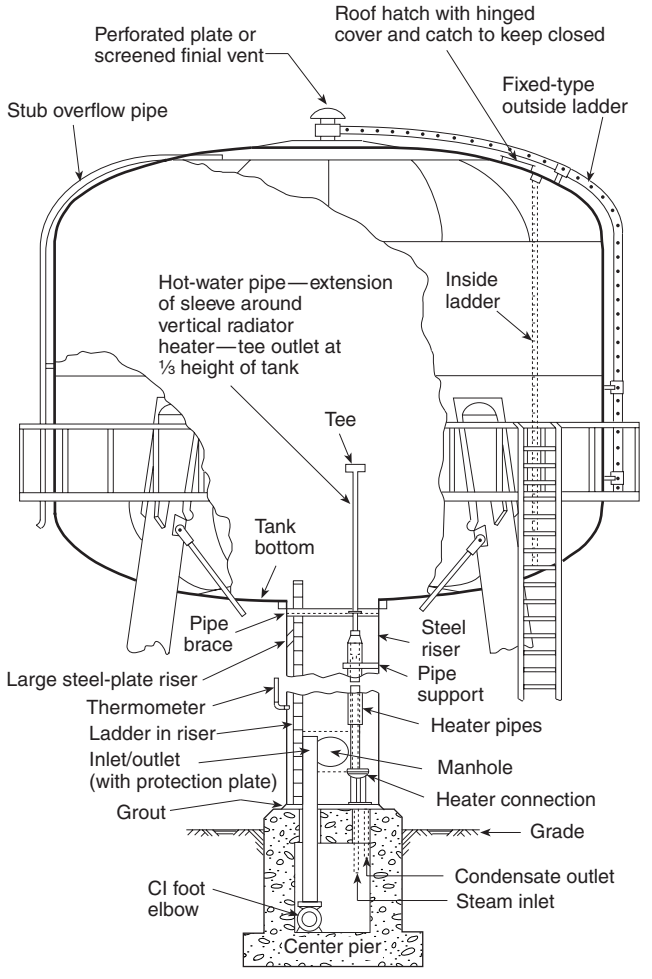

FIGURE B.1(j) Typical Tower-Supported Double-Ellipsoidal Tank.

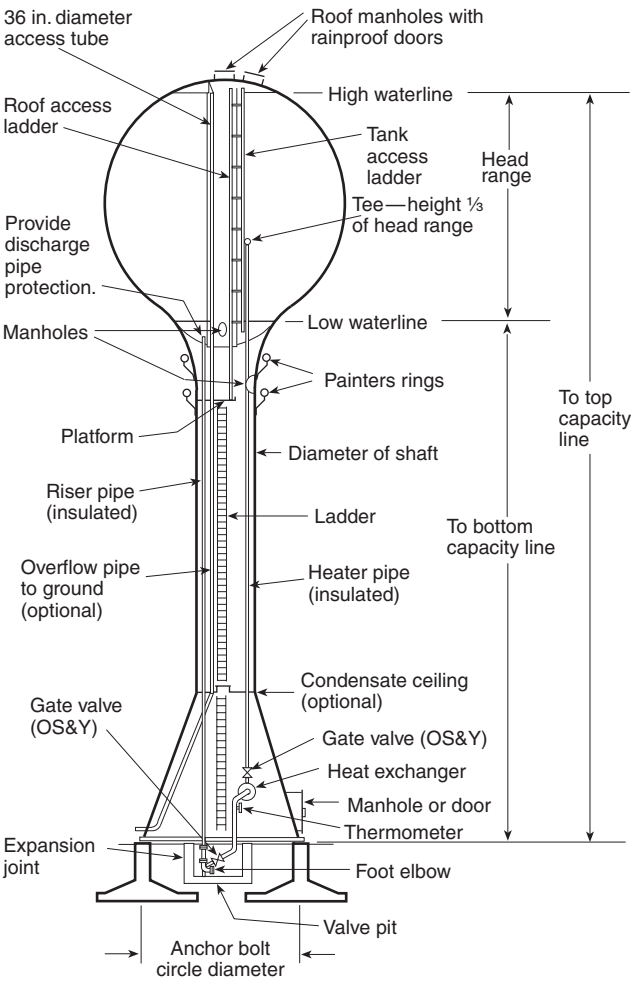

For SI units, 1 in. = 25.4 mm.

FIGURE B.1(k) Typical Pedestal Tank.

Copyright National Fire Protection Association
Provided by IHS under license with NFPA
No reproduction or networking permitted without license from IHS
Not for Resale

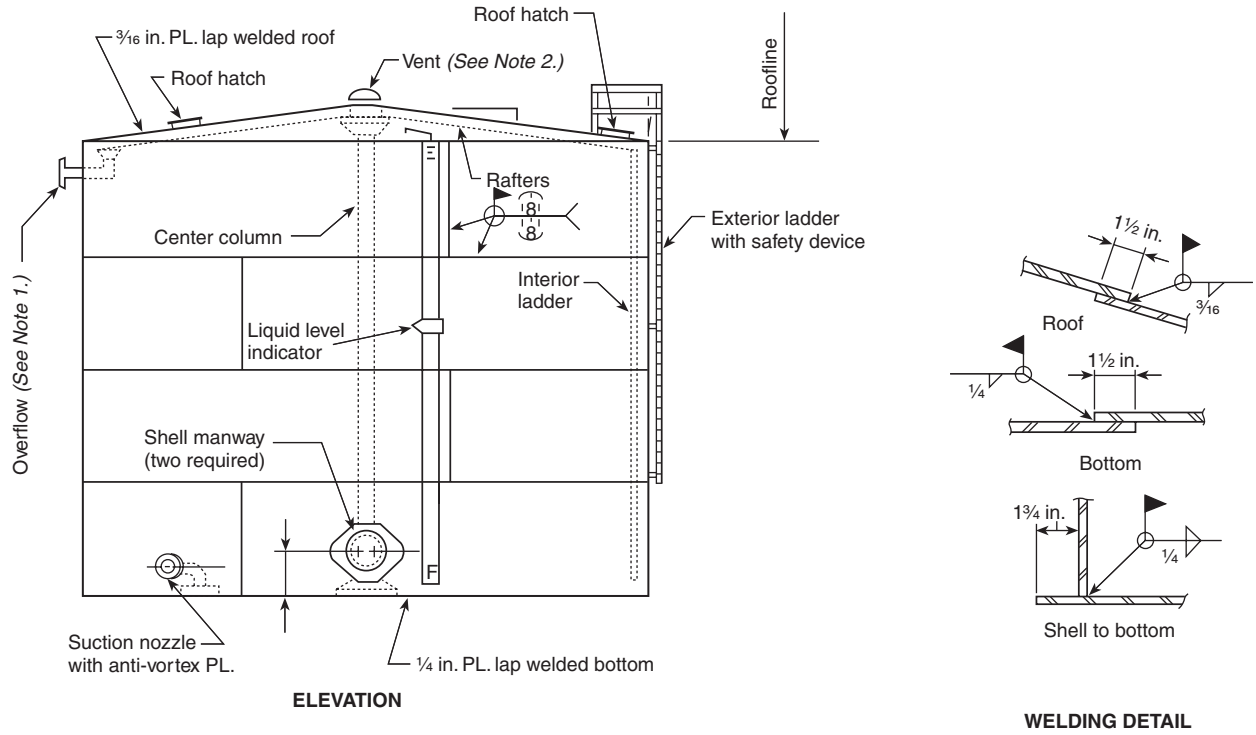

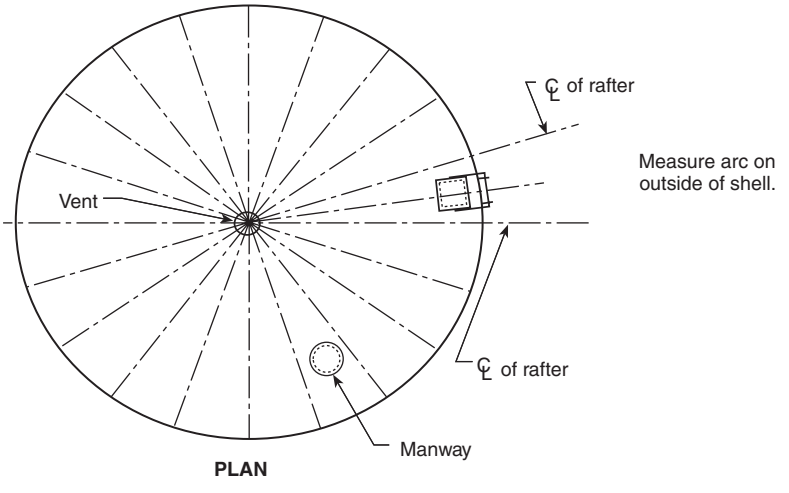

For SI units, 1 in. = 25.4 mm.

FIGURE B.1(l) Welded-Steel Suction Tank. [Notes: (1) See Section 14.5. (2) See Section 4.14.]

Copyright National Fire Protection Association
Provided by IHS under license with NFPA
No reproduction or networking permitted without license from IHS
Not for Resale

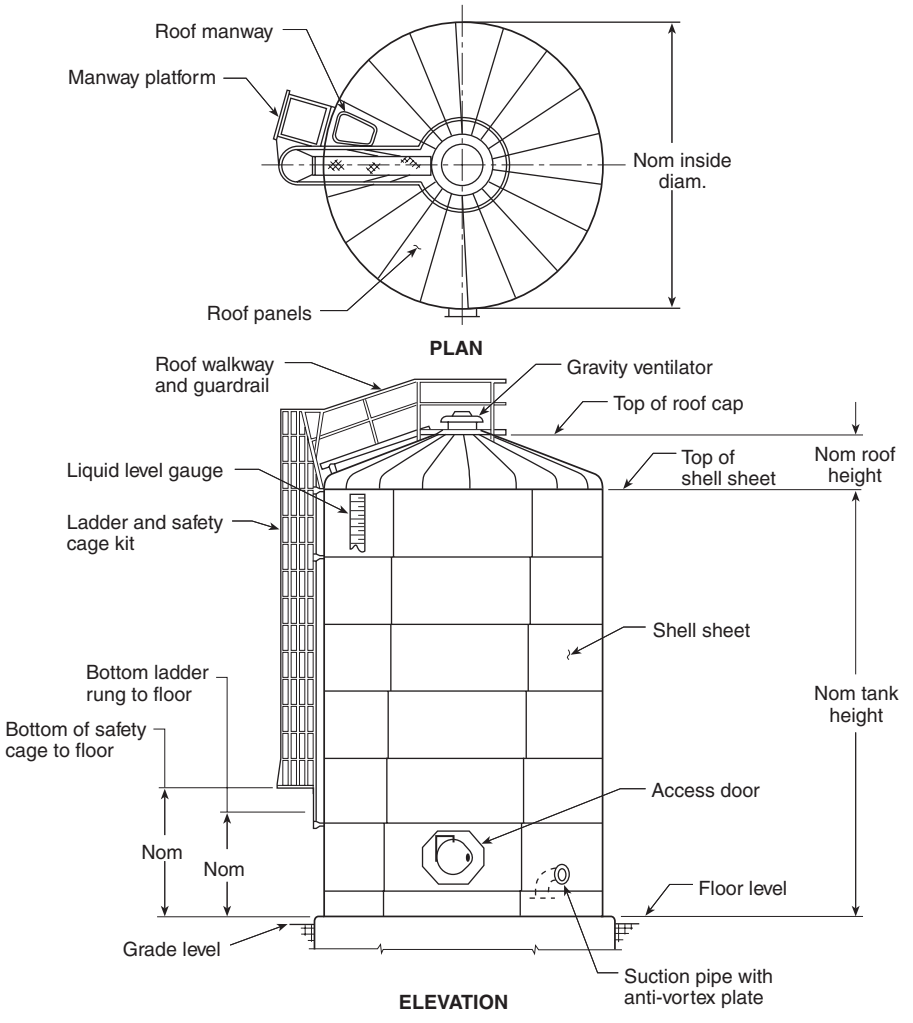

FIGURE B.1(m) Lap-Jointed Bolted Steel Tank.

Copyright National Fire Protection Association
Provided by IHS under license with NFPA
No reproduction or networking permitted without license from IHS
Not for Resale

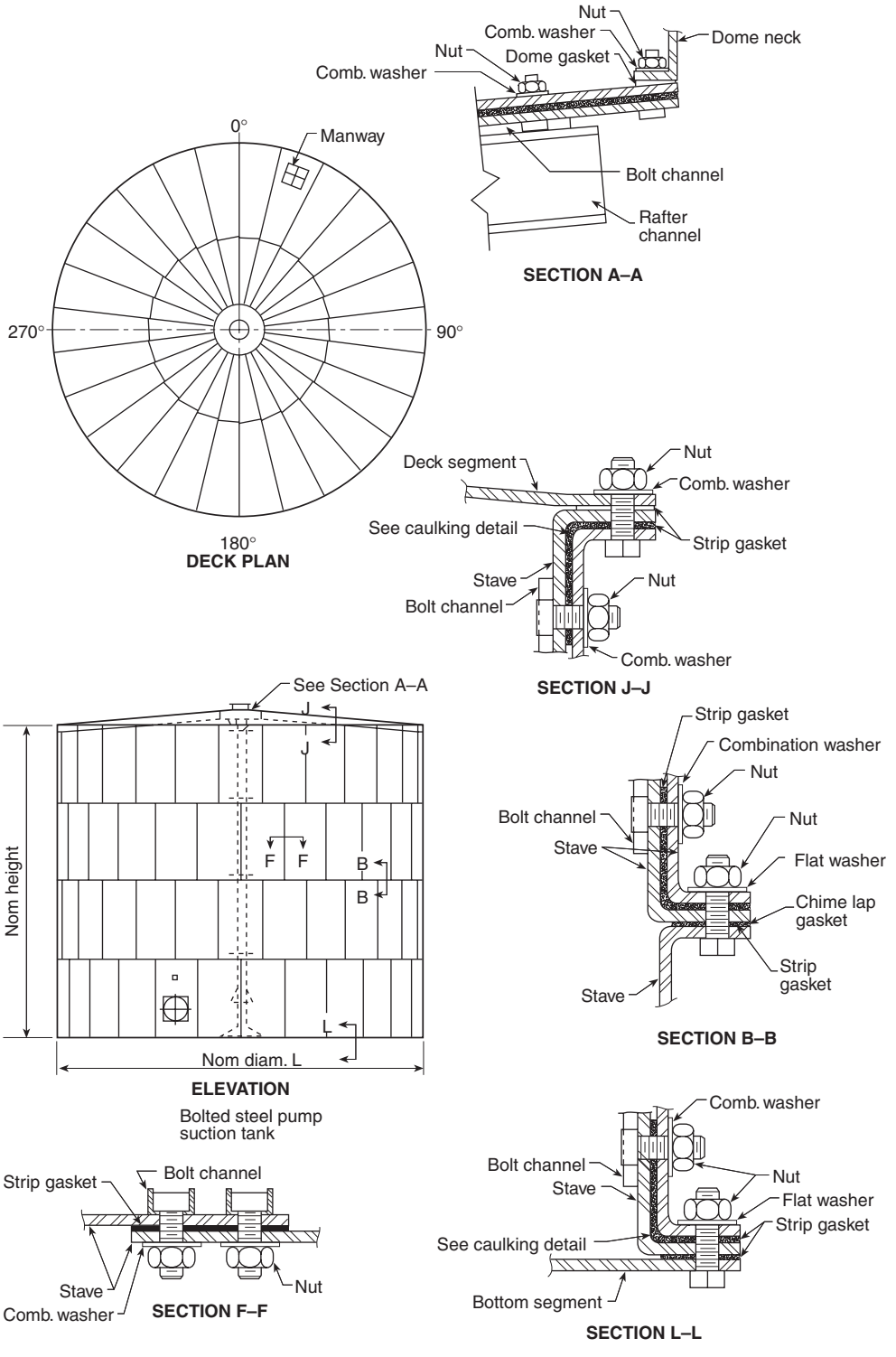

FIGURE B.1(n) Flange-Jointed Bolted Steel Tank.

Copyright National Fire Protection Association
Provided by IHS under license with NFPA
No reproduction or networking permitted without license from IHS
Not for Resale

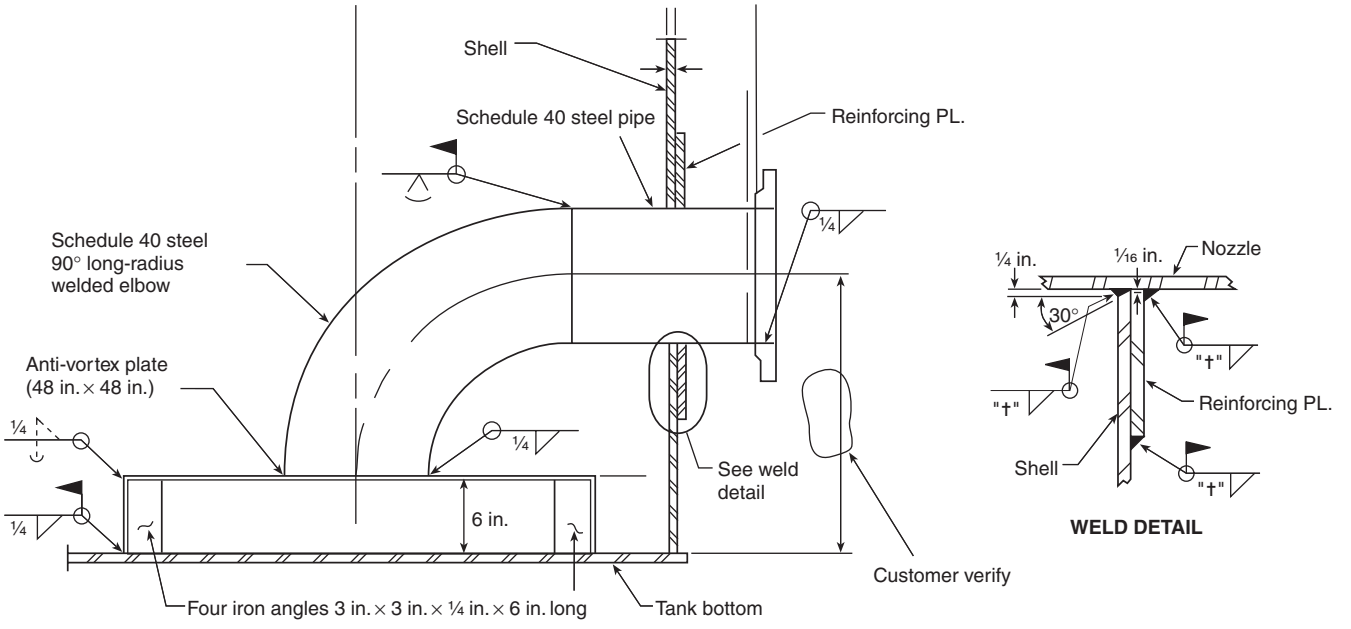

For SI units, 1 in. = 25.4 mm.

FIGURE B.1(o) Suction Nozzle with Anti-Vortex Plate for Welded Suction Tanks. *(See A.14.2.13.2.)*

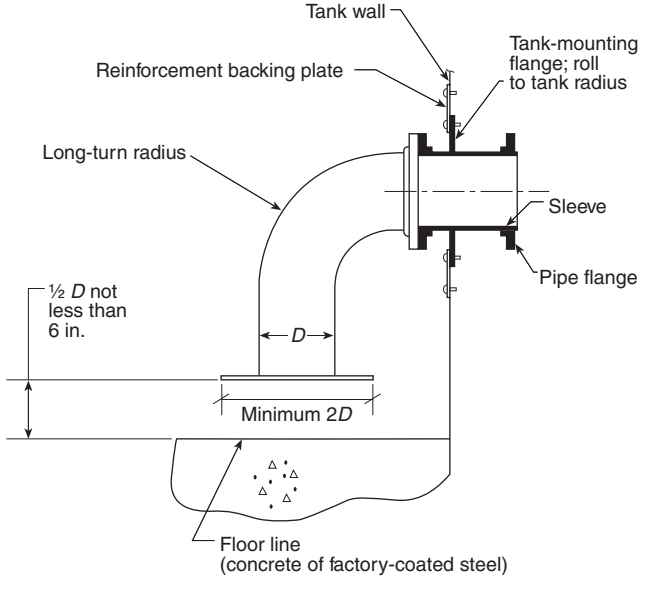

For SI units, 1 in. = 25.4 mm.

FIGURE B.1(p) Typical Suction Nozzle with Anti-Vortex Plate for Lap-Jointed Bolted Tanks. *(See A.14.2.13.2.)*

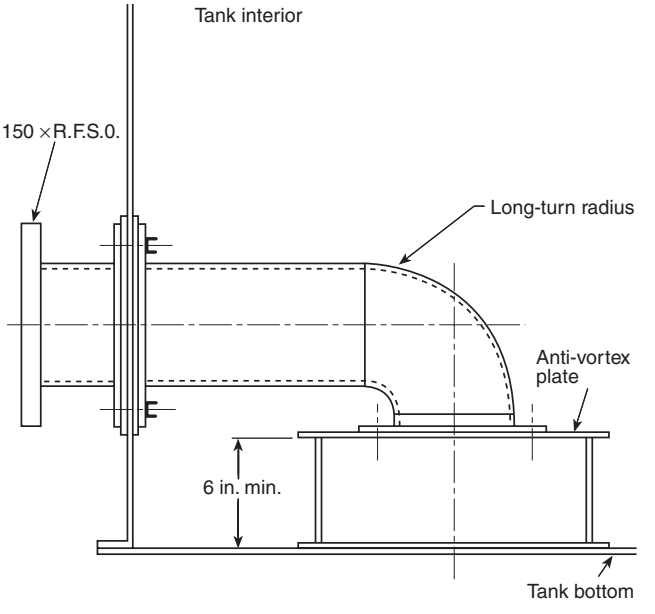

For SI units, 1 in. = 25.4 mm.

FIGURE B.1(q) Typical Suction Nozzle with Anti-Vortex Plate for Flange-Jointed Bolted Steel Tanks. *(See A.14.2.13.2.)*

Copyright National Fire Protection Association
Provided by IHS under license with NFPA
No reproduction or networking permitted without license from IHS
Not for Resale

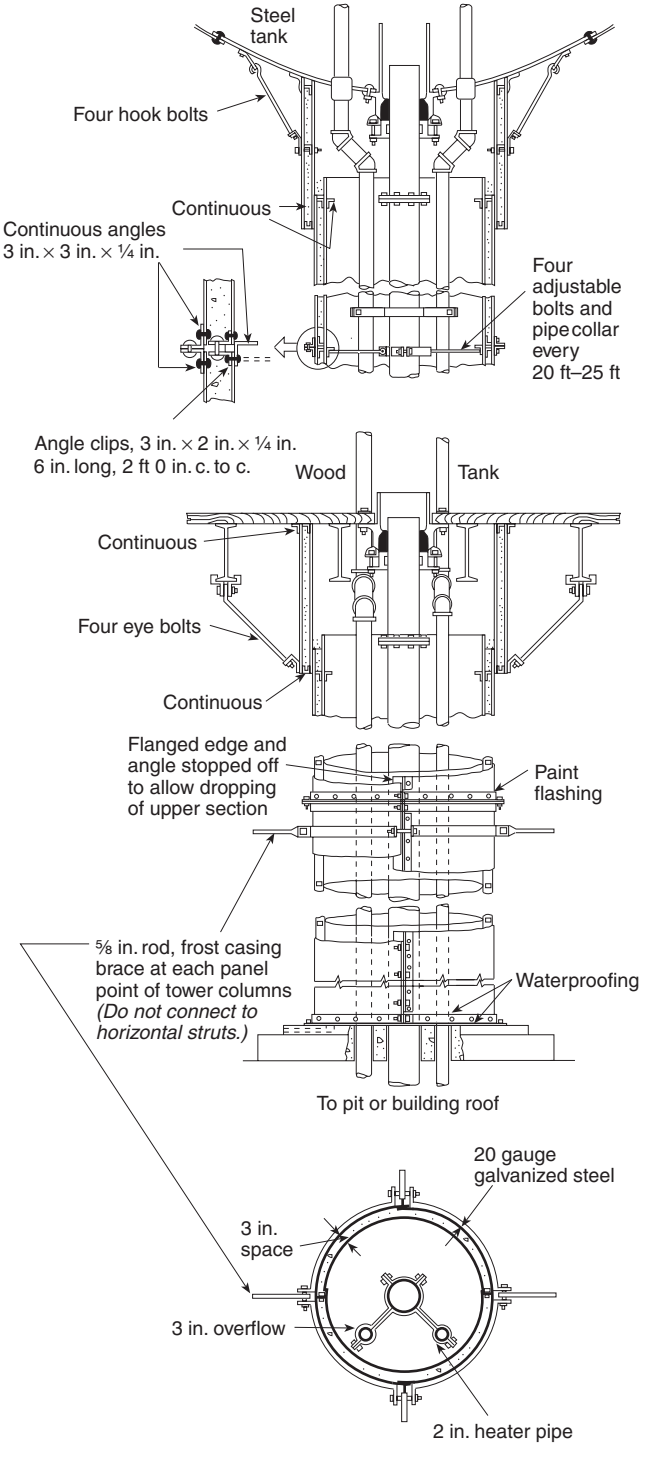

For SI units, 1 in. = 25.4 mm; 1 ft = 0.3048 m.

FIGURE B.1(r) Recommended Insulated Metal Frostproof Casings. ***(For details on waterproofing, see 14.1.1.1 and 14.1.1.2.)***

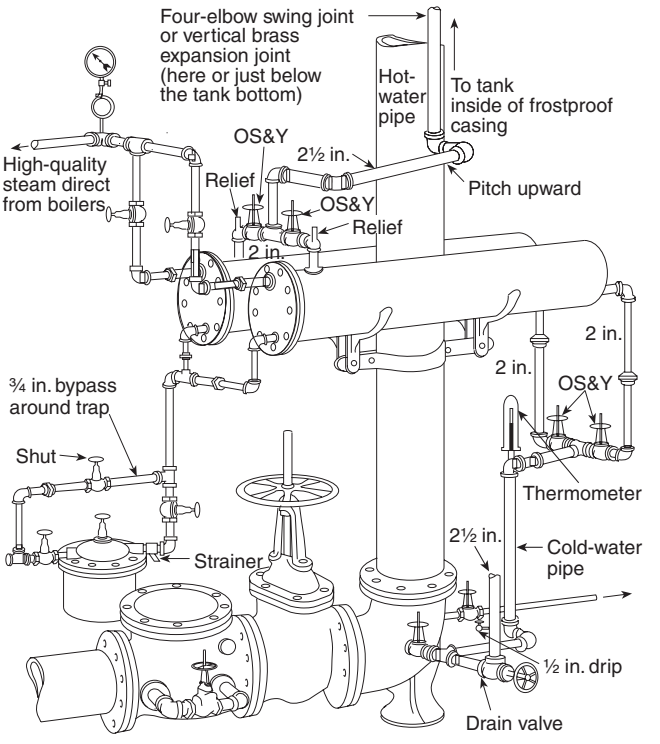

For SI units, 1 in. = 25.4 mm.

FIGURE B.1(s) Arrangements of Multiple Heaters.

Copyright National Fire Protection Association
Provided by IHS under license with NFPA
No reproduction or networking permitted without license from IHS
Not for Resale

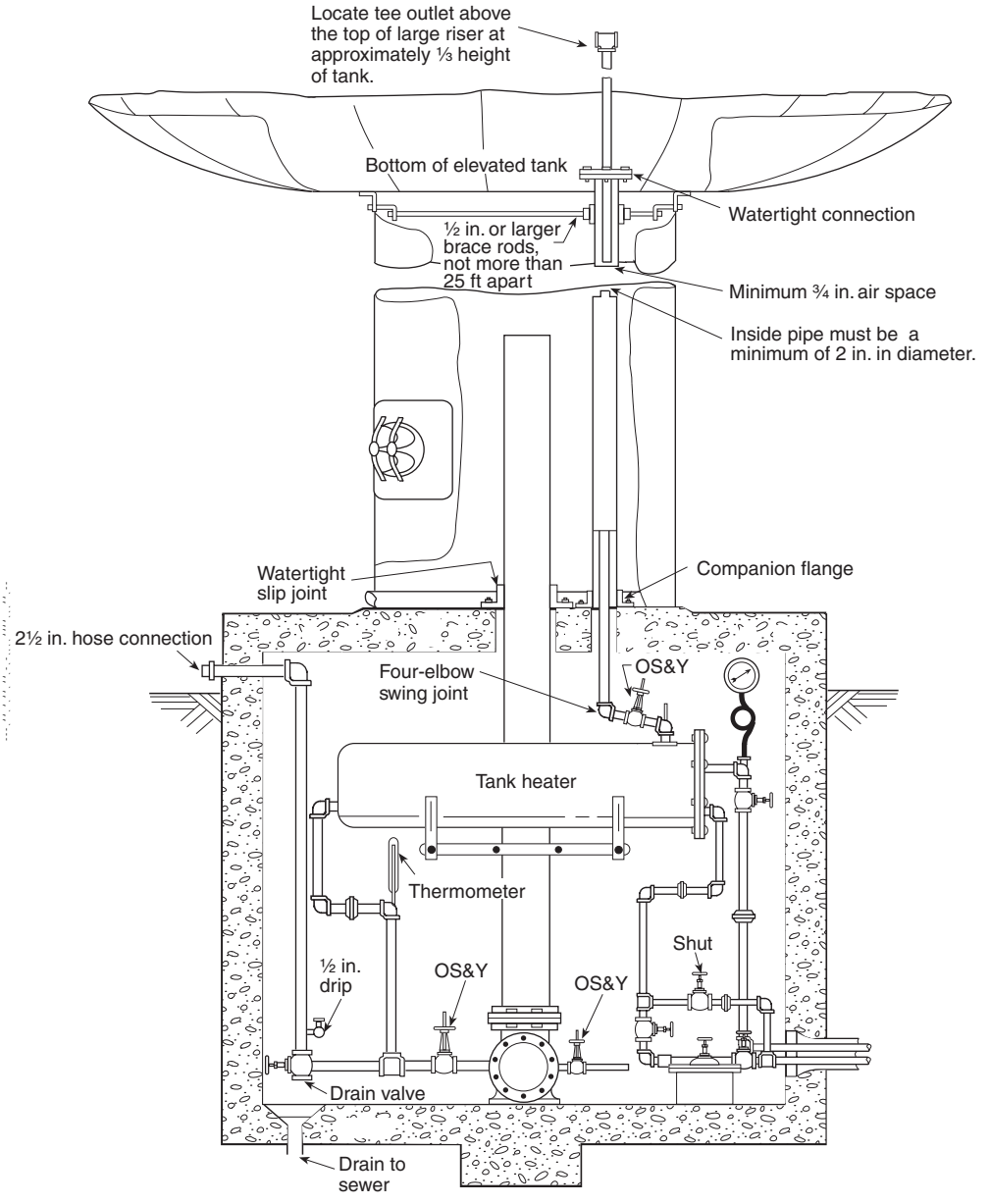

For SI units, 1 in. = 25.4 mm; 1 ft = 0.3048 m.

FIGURE B.1(t) Arrangements of a Circulation Heater for a Tank with a Large Riser.

Copyright National Fire Protection Association
Provided by IHS under license with NFPA
No reproduction or networking permitted without license from IHS
Not for Resale

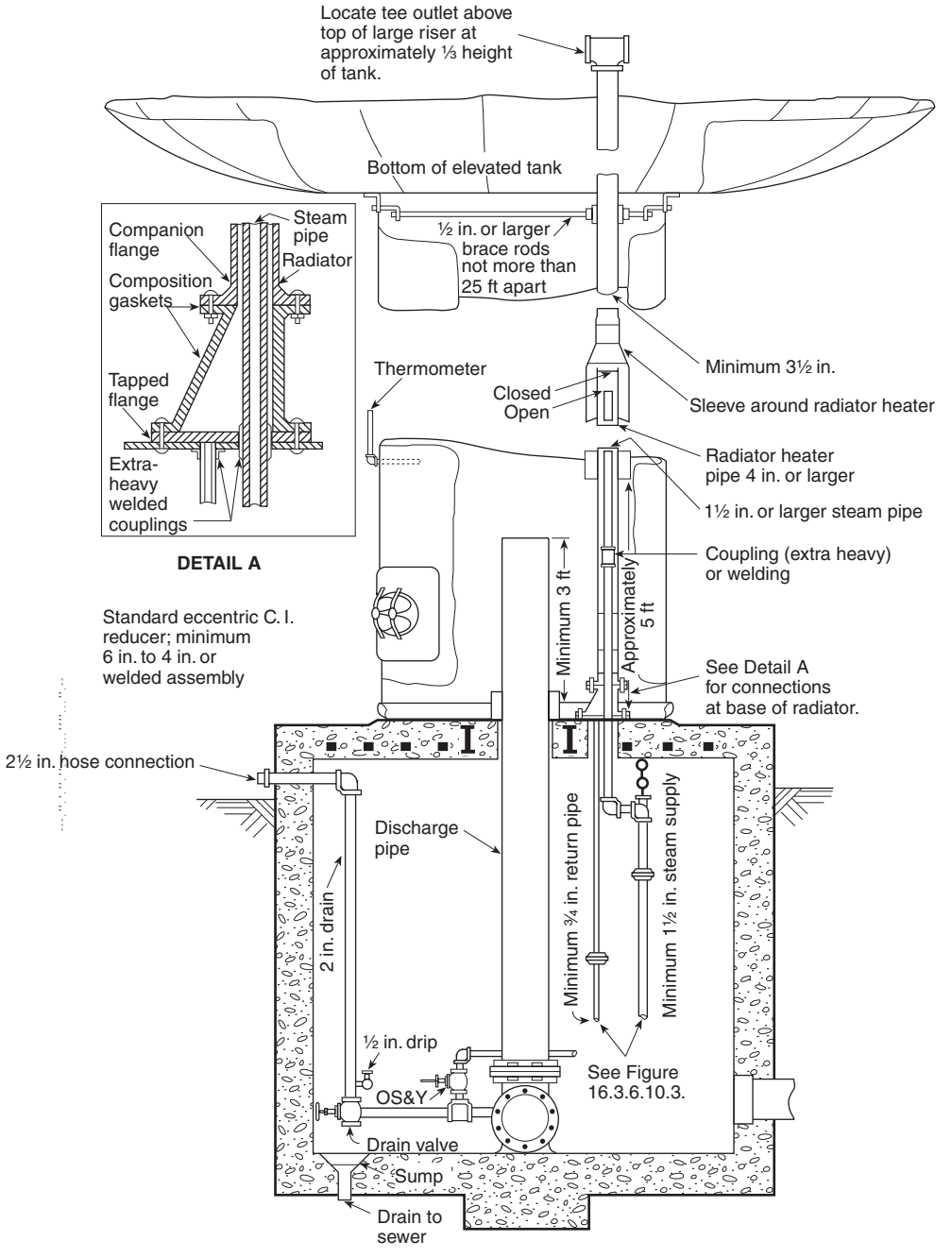

For SI units, 1 in. = 25.4 mm; 1 ft = 0.3048 m.

FIGURE B.1(u) Arrangement of a Radiator Heater for a Tank with a Large Riser.

Copyright National Fire Protection Association
Provided by IHS under license with NFPA
No reproduction or networking permitted without license from IHS
Not for Resale

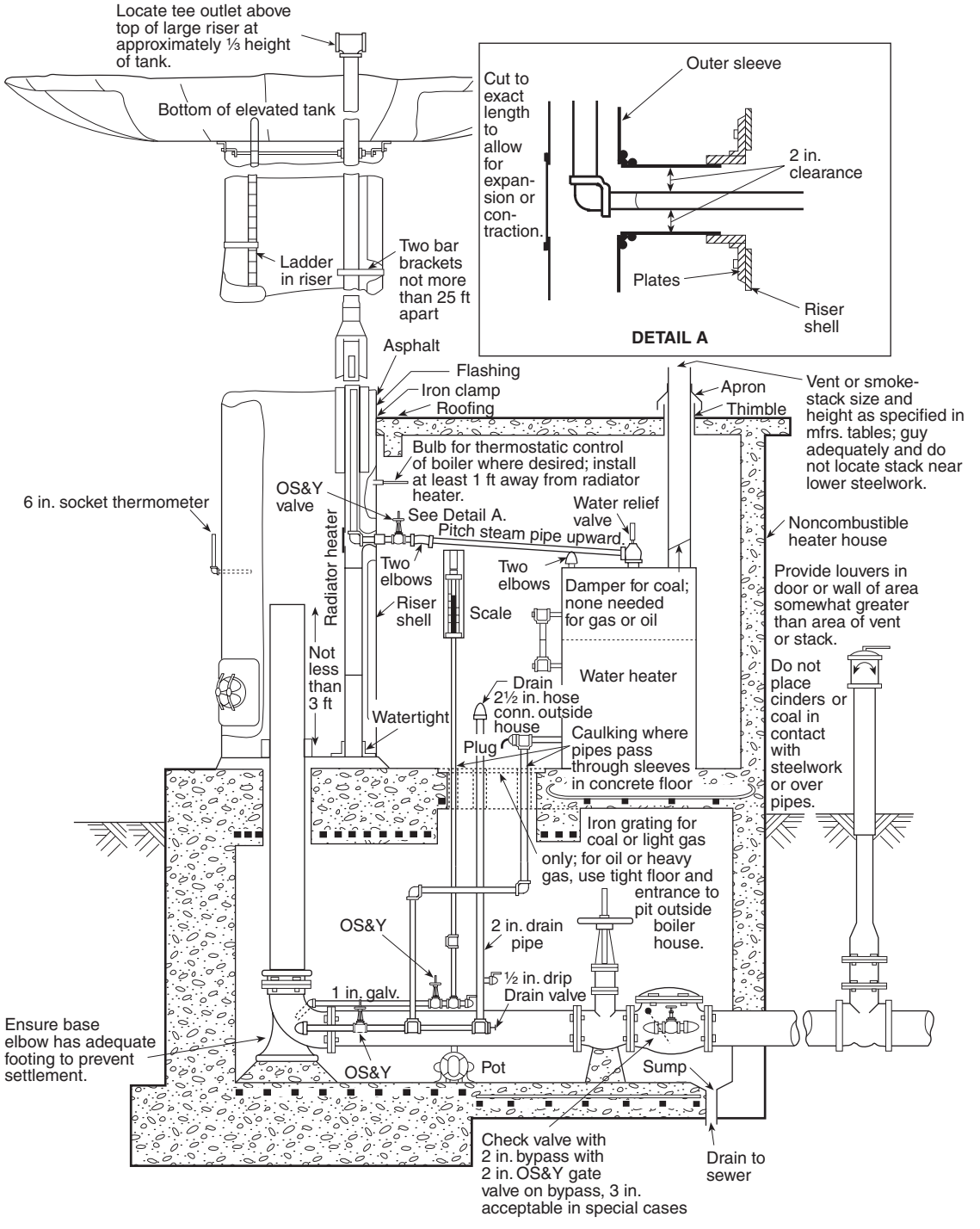

For SI units, 1 in. = 25.4 mm; 1 ft = 0.3048 m.

FIGURE B.1(v) Arrangement of Aboveground Water Heater for Tank with Large Riser.

Copyright National Fire Protection Association
Provided by IHS under license with NFPA
No reproduction or networking permitted without license from IHS
Not for Resale

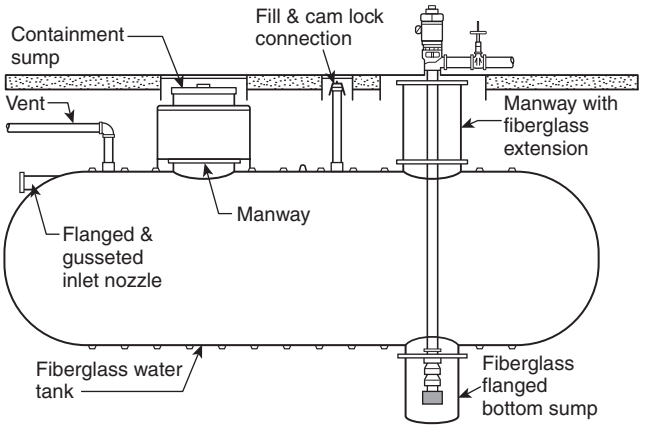

FIGURE B.1(w) Typical Fiberglass Underground Water Tank with Bottom Sump.

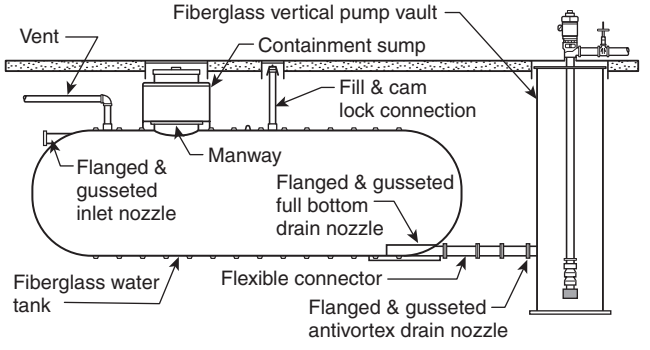

FIGURE B.1(x) Typical Fiberglass Underground Water Tank with Fiberglass Pump Vault.

Annex C Informational References

C.1 Referenced Publications. The documents or portions thereof listed in this annex are referenced within the informational sections of this standard and are not part of the requirements of this document unless also listed in Chapter 2 for other reasons.

C.1.1 NFPA Publications. National Fire Protection Association, 1 Batterymarch Park, Quincy, MA 02169-7471.

NFPA 13, *Standard for the Installation of Sprinkler Systems*, 2007 edition.

NFPA 72®, *National Fire Alarm Code®*, 2007 edition.

C.1.2 Other Publications.

C.1.2.1 ASME Publications. American Society of Mechanical Engineers, Three Park Avenue, New York, NY 10016-5990.

ASME *Boiler and Pressure Vessel Code*, 1998.

C.1.2.2 AWWA Publications. American Water Works Association, 6666 West Quincy Avenue, Denver, CO 80235.

AWWA D100, *Welded Steel Tanks for Water Storage*, 1996.

AWWA D103, *Factory-Coated Bolted Steel Tanks for Water Storage*, 1997.

C.2 Informational References. (Reserved)

C.3 References for Extracts in Informational Sections. (Reserved)

Copyright National Fire Protection Association
Provided by IHS under license with NFPA
No reproduction or networking permitted without license from IHS
Not for Resale

Index

Copyright © 2008 National Fire Protection Association. All Rights Reserved.

The copyright in this index is separate and distinct from the copyright in the document that it indexes. The licensing provisions set forth for the document are not applicable to this index. This index may not be reproduced in whole or in part by any means without the express written permission of NFPA.

-A-

Acceptance tests ..... *see* Tests
Air circulation under tank bottom 8.5.9
Air compressors, pressure tanks 7.2.10
Air lock, pressure tanks 7.1.5, A.7.1.5
Air pressure, pressure tanks 7.1.4, 7.2.6
Alarm, low water temperature 16.1.2.2, A.16.1.2.2
Anchor bolts
Factory-coated, bolted steel tanks 6.2.5
Steel towers 13.2.2, 13.5.22
Tank and tower foundations 12.4.2, 12.4.3, 12.5.1
Welded-steel gravity tanks 5.2.2
Angles, starred 13.5.5
Anti-vortex plate assembly .... 14.2.13, A.14.2.13.3, Fig. B.1(o) to (q)
Approved (definition) 3.2.1, A.3.2.1
Authority having jurisdiction (definition) 3.2.2, A.3.2.2

-B-

Balconies
Load 4.11.5, 8.3.5, 13.3.5
Steel towers 13.3.5, 13.7.5
Wood gravity tanks ..... 8.3.5, 8.7.9 to 8.7.14
Bearing stresses, steel tower 13.4.5
Bending stress, steel tower 13.4.3, 13.4.6
Bolted steel tanks ..... *see* Factory-coated, bolted steel tanks
Bolts
Anchor ..... *see* Anchor bolts
Factory-coated, bolted steel tanks 6.2.5
Steel towers 13.2.2, 13.6.3
Welded-steel gravity tanks 5.2.2
Bottoms ..... *see also* Flat bottoms
Accessibility of 5.5.5
Air circulation under 8.5.9
Fittings, support for ..... 9.5, A.9.5.1, Fig. B.1(e), Fig. B.1(f)
Hoops, wood gravity tanks 8.5.4
Joints at 8.6.6
Lumber in wood gravity tanks 8.2.2, A.8.2.2.2
Riser pipe, load on 13.5.21.1
Braces
Discharge pipe 14.2.4
Steel towers 13.5.16, 13.5.19
Buried tanks
Fiberglass-reinforced plastic tanks ..... 11.5, 11.7.2, A.11.2, A.11.7.2, Fig. B.1(x), Fig. B.1(y)
Pressure tanks ..... 7.1.10, A.7.1.10.3, Fig. B.1(a)
Water-level monitoring 11.7.2, 14.1.8.4, A.11.7.2
Bypass (filling pipe) 14.4.4, 14.4.5

-C-

Capacity 4.1, A.4.1.1, A.4.1.3.1
Concrete gravity tanks 10.3
Embankment-supported coated fabric suction tanks 9.2
Factory-coated, bolted steel tanks 6.1.2
Fiberglass-reinforced plastic tanks A.11.3
Pressure tanks 7.1.3
Tank heaters 16.1.2, A.16.1.2
Welded-steel gravity tanks 5.1.2, 5.1.3
Wood gravity tanks 8.1.2, 8.1.3, A.8.1.3
Casings, frostproof ..... *see* Frostproof casings, piping
Castings, welded steel gravity tanks 5.2.4
Clean-outs ..... 14.6, A.14.6.3.6, A.14.6.4.5, Fig. B.1(i), Fig. B.1(k)
Clevises 13.5.9
Coal-burning water heaters 16.3.4
Coated tanks ..... *see* Embankment-supported coated fabric suction tanks; Factory-coated, bolted steel tanks
Coatings ..... *see also* Painting and repainting
Factory-coated, bolted steel tanks 6.5.3, 6.5.5, 6.6.3, A.6.5.5
Wax 5.9.7.5.1, A.5.7.9.5.1
Coils
Heating surface in coils ..... Table A.15.2
Steam 16.3.8
Columns, steel
Factory-coated, bolted steel tanks 6.2.4
Load for 4.11.6
Steel towers ..... 13.2.1.3, 13.5.3, 13.5.11, 13.5.13 to 13.5.15, 13.6.8
Welded-steel gravity tanks 5.5.1.3, 5.6.4
Compressors, air, pressure tanks 7.2.10
Concrete gravity tanks ..... 4.3.1, Chap. 10
Earthquake loads 10.4
Prestressed 10.2
Testing 17.7
Wall treatments 10.5
Confined entry requirements signs 4.7.2, A.4.7.2
Conical frustums, steel towers 13.5.21.5, 13.5.21.6
Conical roofs ..... *see* Roofs
Connections, pipe ..... *see* Pipe connections and fittings
Connections, steel towers 13.5.6
Contract, piping 14.1.4
Contractor, responsibility 4.6
Corrosion protection
Pressure tanks 7.1.10.4.1
Steel towers 13.7.6, A.13.7.6
Welded-steel gravity tanks 5.5.2, 5.6.7.1, A.5.6.7.1

-D-

Dead load 4.11.1, 8.3.1, 13.3.1, 13.4.7.1, 13.4.7.2
Definitions ..... Chap. 3
Drains
Embankment-supported coated fabric suction tanks ..... 9.5.1, A.9.5.1, Fig. B.1(e), Fig. B.1(f)
Emergency, pressure tanks 7.2.8, 7.2.11
Heater water-circulating pipes 16.1.7.5.4, 16.1.7.5.5
Riser ..... 14.6.4, A.14.6.4.5, Fig. B.1(i)
Valve pits 15.1.8, A.15.1.8
Dual-service tanks, connections for 14.7.1, A.14.7.1

-E-

Earthquake load 4.11.4, 4.11.7
Concrete gravity tanks 10.4
Factory-coated, bolted steel tanks 6.3
Fiberglass-reinforced plastic tanks 11.5.2, 11.6.1
Steel towers 13.3.6, 13.4.7.2, 13.4.7.3
Welded-steel gravity tanks 5.3
Wood gravity tanks 8.3.4, 8.4.2
Electric water heaters 16.3.5
Electrodes, filler metal 5.2.6, 6.2.7
Elevated tanks 4.1, A.4.1.1, A.4.1.3.1
Clean-out and drain ..... 14.6.1, 14.6.3, A.14.6.3.6, Fig. B.1(k)
Foundation piers for 12.3
Heating for ..... Table 16.1.4(a), Table 16.1.4(b), Table 16.1.7.1, 16.1.7.4.2, 16.2.1, 16.2.2, 16.3.6.1, 16.3.8.6, A.16.1.4, A.16.2.1, A.16.3.6.1

Copyright National Fire Protection Association
Provided by IHS under license with NFPA
No reproduction or networking permitted without license from IHS
Not for Resale

Installation ..... Figs. B.1(i) to (k)
Materials 4.3.2
Embankment-supported coated fabric suction tanks ..... Chap. 9
Construction 9.3.1
Design 9.3.2
Embankment preparation 9.4.1
Heating for ..... Table 16.1.4(d), 16.5, A.16.1.4, Fig. B.1(g)
Installation ..... 9.4.2, Figs. B.1(e) to (h)
Materials 4.3.1, 9.3
Physical properties of finished assembly ..... Table 9.1
Pipe connections and fittings ..... 9.5.1, 9.6, A.9.5.1, A.9.6.2.4, Fig. B.1(h)
Tank sump and support for bottom fittings ..... 9.5, A.9.5.1, Fig. B.1(e), Fig. B.1(f)
Testing 17.6
Equivalency to standard 1.4

-F-

Fabric tanks ..... *see* Embankment-supported coated fabric suction tanks
Factory-coated, bolted steel tanks ..... Chap. 6
Design details 6.4
Erection 6.6
Fabrication 6.5, A.6.5.5
Installation ..... Fig. B.1(m), Fig. B.1(n), Fig. B.1(p), Fig. B.1(q)
Materials 4.3, 6.2, A.6.2.6
Unit stress 6.3.2
Fiberglass-reinforced plastic tanks ..... 4.3.1, Chap. 11
Aboveground tanks, protection of 11.6
Buried tanks ..... 11.5, 11.7.2, A.11.2, A.11.7.2, Fig. B.1(x), Fig. B.1(y)
Connections ..... 11.7, A.11.7.2 to A.11.7.4
Testing 17.9
Fillet welds 13.4.8
Filling, water ..... *see* Water filling supply
Fireproofing ..... 4.2.1.2 to 4.2.1.4, 4.2.2, A.13.1.1
Fire protection, tanks 7.2.13
Fittings, pipe ..... *see* Pipe connections and fittings
Flat bottoms
Clean-outs ..... 14.6.3, A.14.6.3.6, Fig. B.1(k)
Testing 17.3.1
Thickness 5.5.4
Floors
Discharge pipe at 14.2.1
Filling pipe at 14.4.9
Pipe connections and fittings, intersections of ..... *see* Pipe connections and fittings
Forgings 5.2.3, 6.2.6, A.6.2.6
Forked ends 13.5.9
Foundations, tank and tower ..... 4.2.3, Chap. 12
Anchorage 12.4
Concrete specifications 12.1
Elevated tanks, piers for 12.3
Embankment-supported coated fabric suction tanks 9.4.1
Grouting 12.5, 13.6.5
Soil-bearing pressures 12.6, A.12.6.1.1
Suction tanks 12.2
Frostproof casings, piping ..... 14.1.9, Table 15.1.2.4, 15.2, A.14.1.9, Fig. B.1(r)

-G-

Gas-fired water heaters 16.3.2
Gaskets 6.2.8
Gauges
Air-pressure, pressure tanks 7.2.6
Water-level 7.2.5, 9.6.3, 14.1.8, A.14.1.8
Girders, circular (steel towers) 13.5.14, 13.5.15
Gravity tanks ..... *see* Concrete gravity tanks; Welded-steel gravity tanks; Wood gravity tanks
Grillage, steel towers 13.5.18
Groove welds 13.4.8

-H-

Handholes 14.6.1
Hatches, roof 5.7.3, 8.7.5
Heater houses 15.1.9, 15.1.10
Heaters ..... *see also* Heating, tank
Capacity ..... Tables 16.1.4(a) to (h)
Circulating ..... 14.6.4.5, 16.1.7, A.14.6.4.5, A.16.1.3, A.16.1.7, Fig. B.1(i), Fig. B.1(t)
Coal-burning water 16.3.4
Electric water 16.3.5
Gas-fired water 16.3.2
Installation ..... Fig. B.1(g), Fig. B.1(s) to (v)
Insulation 16.1.6
Location 16.1.5, A.16.1.5
Multiple 16.3.1.8, 16.3.5.4
Oil-fired water 16.3.3
Operation 16.1.9, A.16.1.9.1
Pipes 16.1.7, 16.3.8, A.16.1.5, A.16.1.7
Relief valve 16.1.8
Steam water 16.3.1, A.16.3.1
Vertical steam radiators ..... 16.2.1.1, 16.3.6, A.16.3.6.1, Fig. B.1(j)
Heating, tank ..... Chap. 16; *see also* Heaters
Embankment-supported coated fabric suction 16.5
Gravity-circulating heating 16.2
Hot water 16.3.7
Insulation 16.4
Requirements 16.2, A.16.2
Solar 16.3.10
Systems 16.3, A.16.3.1, A.16.3.6.1
Heat losses ..... *see* Heaters
Holiday (definition) 3.3.1
Hoops, wood gravity tanks ..... 8.2.4, 8.2.5, 8.4.1.1, 8.5.2 to 8.5.6, 8.6.10 to 8.6.12, A.8.5.3
House, valve ..... *see* Valve pit or house
Housing, pressure tanks ..... 7.1.9, Fig. B.1(a)

-I-

Ice, damage from 5.6.6
Inspections 18.1
Buried pressure tanks 7.1.10.3, A.7.1.10.3
Water tanks 17.1, A.17.1.2
Insulation
Heater 16.1.6
Tank 16.4
Isothermal lines ..... Fig. X:16.1.4

-J-

Joints
Expansion 14.2.7, 14.3
Four-way junctions 5.5.8
Swing 14.2.9

-L-

Labeled (definition) 3.2.3
Ladders
Inside 5.7.6, 8.7.6, 8.7.8
Load 4.11.5, 8.3.5, 13.3.5
Outside 5.7.5, 8.7.6, 8.7.7
Steel towers 13.3.5, 13.7.2, 13.7.3
Valve pit 15.1.6
Welded-steel gravity tanks ..... 5.7.4 to 5.7.7
Wood gravity tanks ..... 8.3.5, 8.7.6 to 8.7.8
Layouts, approval of 4.5.2
Leakage tests ..... *see* Tests
Lightning protection 4.8, 8.7.20
Listed (definition) 3.2.4, A.3.2.4
Live load 4.11.2, 8.3.2, 13.3.2, 13.3.3, 13.4.7.1, 13.4.7.2

Copyright National Fire Protection Association
Provided by IHS under license with NFPA
No reproduction or networking permitted without license from IHS
Not for Resale

Loads 4.11
Balcony and platform 4.11.5, 8.3.5, 13.3.5
Columns and struts 4.11.6
Concrete gravity tanks 10.4
Dead ..... *see* Dead load
Earthquake ..... *see* Earthquake load
Ladder 4.11.5, 8.3.5, 13.3.5
Live ..... *see* Live load
Riser pipe, on 13.5.21.1
Steel towers 13.3
Valve pit 15.1.4.2
Welded-steel gravity tanks 5.3, 5.5.7
Wind ..... *see* Wind load
Wood gravity tanks 8.3
Location
Heaters 16.1.5, A.16.1.5
Tanks 4.2, 7.1.6, 7.1.10, A.7.1.10.3
Lugs, hoop 8.2.5, 8.5.6
Lumber, wood gravity tanks ..... 8.2.1 to 8.2.3, 8.4.1.2, 8.5.1, 8.6.1 to 8.6.9, A.8.2.2.2, A.8.6.1

-M-

Maintenance ..... Chap. 18
Manholes ..... 13.5.21.4, 14.6.1, 14.6.2, Fig. B.1(j)
Embankment-supported coated fabric suction tanks 9.6.2.1
Large risers 14.1.13.2
Pressure tanks 7.1.10.3, 7.1.10.7, 7.2.1, 7.2.11, A.7.1.20.3
Valve pit 15.1.5
Map, isothermal ..... Fig. X:16.1.4
Materials 4.3
Embankment-supported coated fabric suction tanks 9.3
Factory-coated, bolted steel tanks 6.2, A.6.2.6
National standards 4.10, 13.2.4
Pipes 14.1.12, 14.2.3
Steel towers 13.1.3, 13.2
Strength of 4.9, 13.1.3
Valve pit or house 15.1.2, A.15.1.2
Welded-steel gravity tanks 5.2, A.5.2.3
Wood gravity tanks 8.2, A.8.2.2.2
Measurement, units of 1.6

-N-

Nameplate, pressure tank 7.1.8.2, 7.1.8.3
National standards, materials 4.10, 13.2.4
Net sections 5.5.6
Nuts 6.2.5, 13.6.4

-O-

Oil-fired water heaters 16.3.3
Openings, reinforcement of 5.5.9

-P-

Painting and repainting
Frostproof casing 15.2.5
Pressure tanks 7.1.7.3, 7.1.10.4
Steel towers ..... 13.7.6 to 13.7.9, A.13.7.6
Welded-steel gravity tanks ..... 5.7.8 to 5.7.12, A.5.7.9.5.1, A.5.7.11
Wood gravity tanks ..... 8.7.15 to 8.7.19
Pins 13.2.3, 13.5.7, 13.5.8
Pipe connections and fittings ..... Chap. 14, Fig. B.1(e), Fig. B.1(f)
Discharge pipes ..... 14.2.4 to 14.2.13, 14.3
Embankment-supported coated fabric suction tanks ..... 9.5.1, 9.6, A.9.5.1, A.9.6.2.4, Fig. B.1(h)
Fiberglass-reinforced plastic tanks ..... 11.7, A.11.7.2 to A.11.7.4
Gauges ..... *see* Gauges
Joints ..... *see* Joints
Pressure tanks ..... 7.2, A.7.2.3.2, A.7.2.12, Fig. B.1(a), Fig. B.1(b)
Roofs and floors, intersections at 7.2.12, 14.1.1, 14.4.9, 14.7.3, A.7.2.12, A.14.7.3
Sensors 14.8, A.14.8
Steel towers 13.7.1
For use other than fire protection ..... 14.1.7, 14.3.8, 14.7, A.14.1.7, A.14.7.1 to A.14.7.3
Valves ..... *see* Valves
Welded-steel gravity tanks 5.7.1
Pipes and piping ..... *see also* Risers, large
Air, pressure tanks 7.2.4
Clean-out and drain ..... 14.6, A.14.6.3.6, A.14.6.4.5, Fig. B.1(i), Fig. B.1(k)
Cold-water 16.1.7.2, 16.1.7.5
Discharge ..... 7.2.2, 7.2.11, 14.1.11, 14.2, A.14.2.13.3, Fig. B.1(o)
Filling ..... 7.2.3, 14.4, A.7.2.3.2, Fig. B.1(a), Fig. B.1(b)
Frostproof casings ..... *see* Frostproof casings, piping
Heater water-circulating ..... 16.1.7, Fig. 16.3.6.10.3, Fig. 16.3.6.11.1, A.16.1.5, A.16.1.7, Figs. B.1(s) to (v)
Hot-water 16.1.7.2, 16.1.7.4, 16.3.5.7
Large risers, tanks with 14.1.10, A.14.1.10.1
Overflow 14.5, A.14.5.3, A.14.5.4.2
Repairs 14.1.5
Steam 16.3.9
Steel 14.1.12
For use other than fire protection 14.7.2, A.14.7.2.4
Pits, valve ..... *see* Valve pit or house
Plans 4.5
Plates, steel
Factory-coated, bolted steel tanks 6.2, 6.4.1, A.6.2.6
Steel towers ..... 13.2.1.1, 13.5.11, 13.5.21.2 to 13.7.21.4, 13.6.5
Welded-steel gravity tanks ..... 5.2.1.1 to 5.2.1.3, 5.2.1.5, 5.5.1.5, 5.5.1.6, 5.5.2.3, 5.5.3, 5.5.4, 5.6.1 to 5.6.3, 5.6.7, A.5.5.3.2, A.5.6.7.1, A.5.6.7.2
Platform loads 4.11.5, 8.3.5, 13.3.5
Pressure tanks ..... Chap. 7
Air lock 7.1.5, A.7.1.5
Air pressure 7.1.4
Buried ..... 7.1.10, A.7.1.10.3, Fig. B.1(a)
Construction 7.1.7, A.7.1.7.1
Housing 7.1.9
Installation ..... Fig. B.1(a), Fig. B.1(b)
Markings 7.1.8
Pipe connections and fittings ..... 7.2, A.7.2.3.2, A.7.2.12, Fig. B.1(a), Fig. B.1(b)
Sensors 14.8.2
Service 7.1.1
Testing 17.5
Water level 7.1.4, 7.1.8.3
Pumps
Filling 14.4.6
Water-circulating 16.3.5.2
Purpose of standard 1.2

-R-

Radiators ..... Fig. B.1(u)
Heating surface in coils ..... Table A.15.2
Vertical steam ..... 16.2.1.1, 16.3.6, A.16.3.6.1, Fig. B.1(j)
References ..... Chap. 2, Annex C
Repainting ..... *see* Painting and repainting
Repairs 14.1.5
Retroactivity of standard 1.3
Risers, large
Heaters for ..... A.16.3.6.1, Figs. B.1(t) to (v)
Piping for 14.1.10, A.14.1.10.1
Settling basin 14.2.10
Steel towers 13.3.3, 13.5.21
Rods 5.2.2, 13.2.2, 13.6.4.1
Roofs ..... 4.11.8, 4.13, Fig. B.1(c), Fig. B.1(d)
Anchorage 5.7.2, 8.7.4
Conical ..... 5.5.1.5.1, 8.7.1.1, 8.7.3, A.8.7.3, Fig. B.1(d)
Discharge pipe at 14.2.1

Copyright National Fire Protection Association
Provided by IHS under license with NFPA
No reproduction or networking permitted without license from IHS
Not for Resale

Factory-coated, bolted steel tanks 6.4.1.1
Filling pipe at 14.4.9
Flat cover 8.7.1.1, 8.7.2
Ladders 5.7.5
Pipe connections and fittings, intersections of ..... *see* Pipe connections and fittings
Suction tanks 5.5.1.5.1
Vents for 4.14
Welded-steel gravity tanks 5.6.5, 5.7.2, 5.7.3
Wood gravity tanks ..... 8.7.1 to 8.7.5, A.8.7.3, Fig. B.1(d)
Rubbish removal 4.6.3.1, 8.6.13

-S-

Safety appliances, pressure tanks ..... 7.2.7; *see also* Valves, Relief
Scope of standard 1.1
Screw threads, on rods 13.6.4.1
Sealants 6.2.9
Sensors 14.8, A.14.8
Settling basin, tanks 14.2.10
Shall (definition) 3.2.5
Shapes, structural steel
Factory-coated, bolted steel tanks 6.2.3
Steel towers 13.2.1.2, 13.5.4
Welded-steel gravity tanks ..... 5.2.1.4, 5.2.1.5, 5.5.1.2 to 5.5.1.5
Wood gravity tanks 8.2.6
Shearing stress, steel tower 13.4.4
Should (definition) 3.2.6
SI units 1.6.1, 1.6.3
Slenderness ratio, steel tower stress 13.4.2
Soil-bearing pressures 12.6
Solar heating 16.3.10
Sprinklers, automatic 7.2.13, 11.6.3, A.4.1.1
Standard (definition) 3.2.7
Staves, wood gravity tanks 8.2.2, 8.6.7, 8.6.8, A.8.2.2.2
Steam, direct discharge of 16.3.9
Steam coils 16.3.8
Steam water heaters 16.3.1, A.16.3.1
Steel ..... *see also* Columns, steel; Hoops, wood gravity tanks; Plates, steel; Shapes, structural steel
Reinforcing 5.2.5
Structures ..... *see* Factory-coated, bolted steel tanks; Towers, steel; Welded-steel gravity tanks
Strength of materials 4.9, 13.1.3
Stresses, unit 4.11.7
Factory-coated, bolted steel tanks 6.3.2
Steel towers 13.4
Welded-steel gravity tank 5.4
Wood gravity tanks 8.4, A.8.4.1
Struts 4.11.6, 13.5.17
Stub pipe 14.5.3, A.14.5.3
Suction tanks ..... *see also* Concrete gravity tanks; Embankment-supported coated fabric suction tanks; Factory-coated, bolted steel tanks; Welded-steel gravity tanks; Wood gravity tanks
Foundations for 12.2
Heating for ..... Table 16.1.4(c), Table 16.1.4(g), Table 16.1.4(h), 16.2.2.1, 16.3.8.9, A.16.1.4
Pipes for filling 14.4.10
Water-level gauges 9.6.3
Welded ..... Fig. B.1(l), Fig. B.1(o); *see also* Welded-steel gravity tanks
Supports
Discharge pipe 14.2.5
Pressure tanks 7.1.7.2
Wood gravity tanks ..... 8.2.3, 8.5.7 to 8.5.9, 8.6.9

-T-

Tanks ..... *see* Water tanks; specific types of tanks, e.g., Concrete gravity tanks
Temperature, atmospheric ..... 16.1.2.1, Fig. 16.1.4, 16.2.1, A.16.1.2.1, A.16.2.1
Tension members, length of (steel towers) 13.5.12
Tests ..... 17.2, Chap. 17, 18.1
Concrete gravity tanks 17.7
Disposal of test water 17.10
Embankment-supported coated fabric suction tanks 17.6
Factory-coated, bolted steel tanks 17.4, A.17.4
Fiberglass-reinforced plastic tanks 17.9
Pressure tanks 17.5
Reports 4.15
Soils 12.6.1
Welded-steel gravity tanks 17.3
Wood gravity tanks 17.8
Thermometer, heater 14.1.6, 16.1.7.5.2, 16.1.9.1, A.14.1.6, A.16.1.9.1
Timber, wood gravity tanks ..... *see* Lumber, wood gravity tanks
Towers, steel ..... Chap. 13
Balconies 13.3.5, 13.7.5
Clean-out and drain 14.6.3.1, 14.6.3.3
Design details 13.1.4, 13.5
Fireproofing ..... 4.2.1.2 to 4.2.1.4, 4.2.2, A.13.1.1
Foundations ..... *see* Foundations, tank and tower
Ladders 13.3.5, 13.7.2, 13.7.3
Loads 13.3
Materials 4.3.2, 13.2
Painting ..... 13.7.6 to 13.7.9
Strength 13.1.3
Unit stresses 13.4
Walkways 13.7.4
Workmanship 13.6
Turnbuckles 13.5.9

-U-

Underground pipe material 14.2.3.1
Underground tanks ..... *see* Buried tanks
Units of measurement 1.6
Unit stresses ..... *see* Stresses, unit

-V-

Valve pit or house ..... 15.1.A.15.1.2 to A.15.1.8
Valves
Check 14.2.11, 14.4.5
Control 14.2.12
Indicating 16.1.7.4.6, 16.1.7.5.3
Relief 7.2.7.1, 7.2.7.2, 7.2.9.2, 16.1.8
Water-level gauges ..... *see* Gauges
Vents, roof 4.14
Vertical steam radiators ..... 16.2.1.1, 16.3.6, A.16.3.6.1, Fig. B.1(j)

-W-

Walkways, steel tower 13.7.4
Water filling supply 7.2.9
Drinking water 14.4.8
Filling of tanks 14.1.3, 14.4, A.14.1.3
Filling pipes ..... 7.2.3, 14.4, A.7.2.3.2, Fig. B.1(a), Fig. B.1(b)
Roofs and floors, filling pipe at 14.4.9
Suction tanks, filling pipe for 14.4.10
Water-level gauges ..... *see* Gauges
Waterproofing, valve pit 15.1.7
Water spheres 13.5.21
Water tanks ..... *see also* specific types of tanks, e.g., Concrete gravity tanks
Attachments to 4.7, A.4.7.2
Care and maintenance ..... Chap. 18
Connection to towers 13.5.10
Filling ..... *see* Water filling supply
Heating of ..... Chap. 16
Inspections 17.1, A.17.1.2
Installation ..... Annex B
Placing in service 14.1.3, A.14.1.3
Settling basin 14.2.10

Copyright National Fire Protection Association
Provided by IHS under license with NFPA
No reproduction or networking permitted without license from IHS
Not for Resale

Types 1.5
For use other than fire protection ..... 14.1.7, 14.3.8, 14.7, A.14.1.7, A.14.7.1 to A.14.7.3
Water-level gauges ..... *see* Gauges
Web stiffeners 13.5.20
Welded-steel gravity tanks ..... Chap. 5
Design details 5.5, A.5.5.5.3.2
Heating for ..... Table 16.1.4(e), Table 16.1.4(f), A.16.1.4
Ladders ..... 5.7.4 to 5.7.7
Loads 5.3, 5.5.7
Materials 4.3, 5.2, A.5.2.3
Painting and repainting ..... 5.7.8 to 5.7.12, A.5.7.9.5.1, A.5.7.11
Roofs and supports 5.5.10, 5.6.5, 5.7.2, 5.7.3
Testing 17.3
Unit stresses 5.4
Workmanship 5.6, A.5.6.7.1, A.5.6.7.2
Welding 4.12
Factory-coated, bolted steel tanks 6.5.2
Steel towers 13.4.8, 13.6.3
Welded-steel gravity tanks 5.5.8, 5.5.11
Wind load 4.11.3, 4.11.7
Steel towers 13.3.4, 13.4.7.1, 13.4.7.3
Wood gravity tanks 8.3.3, 8.4.2
Wood frostproof casings 15.2.2
Wood gravity tanks ..... Chap. 8, Fig. B.1(i)
Balconies ..... 8.7.9 to 8.7.14
Clean-out and drain ..... 14.6.3, A.14.6.3.6, Fig. B.1(k)
Design details 8.5, A.8.5.3
Heating for ..... Table 16.1.4(b), A.16.1.4
Ladders ..... 8.7.6 to 8.7.8
Loads 8.3
Materials 4.3, 8.2, A.8.2.2.2
Painting ..... 8.7.15 to 8.7.19
Roofs ..... 8.7.1 to 8.7.5, A.8.7.3, Fig. B.1(d)
Strength 8.1.4, A.8.1.4.4
Testing 17.8
Unit stresses 8.4, A.8.4.1
Workmanship 8.6, A.8.6.1
Wood preservatives 8.7.19
Workmanship 4.4
Steel towers 13.6
Welded-steel gravity tanks 5.6, A.5.6.7.1, A.5.6.7.2
Wood gravity tanks 8.6, A.8.6.1

Copyright National Fire Protection Association
Provided by IHS under license with NFPA
No reproduction or networking permitted without license from IHS
Not for Resale

Sequence of Events Leading to Issuance of an NFPA Committee Document

Step 1: Call for Proposals

- Proposed new Document or new edition of an existing Document is entered into one of two yearly revision cycles, and a Call for Proposals is published.

Step 2: Report on Proposals (ROP)

- Committee meets to act on Proposals, to develop its own Proposals, and to prepare its Report.
- Committee votes by written ballot on Proposals. If two-thirds approve, Report goes forward. Lacking two-thirds approval, Report returns to Committee.
- Report on Proposals (ROP) is published for public review and comment.

Step 3: Report on Comments (ROC)

- Committee meets to act on Public Comments to develop its own Comments, and to prepare its report.
- Committee votes by written ballot on Comments. If two-thirds approve, Report goes forward. Lacking two-thirds approval, Report returns to Committee.
- Report on Comments (ROC) is published for public review.

Step 4: Technical Report Session

- "*Notices of intent to make a motion"* are filed, are reviewed, and valid motions are certified for presentation at the Technical Report Session. ("Consent Documents" that have no certified motions bypass the Technical Report Session and proceed to the Standards Council for issuance.)
- NFPA membership meets each June at the Annual Meeting Technical Report Session and acts on Technical Committee Reports (ROP and ROC) for Documents with "certified amending motions."
- Committee(s) vote on any amendments to Report approved at NFPA Annual Membership Meeting.

Step 5: Standards Council Issuance

- Notification of intent to file an appeal to the Standards Council on Association action must be filed within 20 days of the NFPA Annual Membership Meeting.
- Standards Council decides, based on all evidence, whether or not to issue Document or to take other action, including hearing any appeals.

Committee Membership Classifications

The following classifications apply to Technical Committee members and represent their principal interest in the activity of the committee.

M *Manufacturer:* A representative of a maker or marketer of a product, assembly, or system, or portion thereof, that is affected by the standard.

U *User:* A representative of an entity that is subject to the provisions of the standard or that voluntarily uses the standard.

I/M *Installer/Maintainer:* A representative of an entity that is in the business of installing or maintaining a product, assembly, or system affected by the standard.

L *Labor:* A labor representative or employee concerned with safety in the workplace.

R/T *Applied Research/Testing Laboratory:* A representative of an independent testing laboratory or independent applied research organization that promulgates and/or enforces standards.

E *Enforcing Authority:* A representative of an agency or an organization that promulgates and/or enforces standards.

I *Insurance:* A representative of an insurance company, broker, agent, bureau, or inspection agency.

C *Consumer:* A person who is, or represents, the ultimate purchaser of a product, system, or service affected by the standard, but who is not included in the *User* classification.

SE *Special Expert:* A person not representing any of the previous classifications, but who has a special expertise in the scope of the standard or portion thereof.

NOTES;
1. "Standard" connotes code, standard, recommended practice, or guide.
2. A representative includes an employee.
3. While these classifications will be used by the Standards Council to achieve a balance for Technical Committees, the Standards Council may determine that new classifications of members or unique interests need representation in order to foster the best possible committee deliberations on any project. In this connection, the Standards Council may make appointments as it deems appropriate in the public interest, such as the classification of "Utilities" in the National Electrical Code Committee.
4. Representatives of subsidiaries of any group are generally considered to have the same classification as the parent organization.

Copyright National Fire Protection Association
Provided by IHS under license with NFPA
No reproduction or networking permitted without license from IHS
Not for Resale

NFPA Technical Committee Document Proposal Form

NOTE: All Proposals must be received by 5:00 pm EST/EDST on the published Proposal Closing Date.

For further information on the standards-making process, please contact the Codes and Standards Administration at 617-984-7249 or visit www.nfpa.org/codes.

For technical assistance, please call NFPA at 1-800-344-3555.

FOR OFFICE USE ONLY

Log #:

Date Rec'd:

Please indicate in which format you wish to receive your ROP/ROC ☐ **electronic** ☐ **paper** ☒ **download**
(Note: If choosing the download option, you must view the ROP/ROC from our website; no copy will be sent to you.)

Date April 1, 200X **Name** John J. Doe **Tel. No.** 716-555-1234

Company Air Canada Pilot's Association

Street Address 123 Summer Street Lane **City** Lewiston **State** NY **Zip** 14092

Please indicate organization represented (if any)

1. (a) NFPA Document Title National Fuel Gas Code **NFPA No. & Year** 54, 200X Edition

(b) Section/Paragraph 3.3

2. Proposal Recommends (check one): ☐ new text ☒ revised text ☐ deleted text

3. Proposal (include proposed new or revised wording, or identification of wording to be deleted): [Note: Proposed text should be in legislative format; i.e., use underscore to denote wording to be inserted (inserted wording) and strike-through to denote wording to be deleted (~~deleted wording~~).]

Revise definition of effective ground-fault current path to read:

3.3.78 Effective Ground-Fault Current Path. An intentionally constructed, permanent, low impedance electrically conductive path designed and intended to carry ~~underground~~ electric fault current ~~conditions~~ from the point of a ground fault on a wiring system to the electrical supply source.

4. Statement of Problem and Substantiation for Proposal: (Note: State the problem that would be resolved by your recommendation; give the specific reason for your Proposal, including copies of tests, research papers, fire experience, etc. If more than 200 words, it may be abstracted for publication.)

Change uses proper electrical terms.

5. Copyright Assignment

(a) ☐ **I am the author of the text or other material (such as illustrations, graphs) proposed in this Proposal.**

(b) ☒ **Some or all of the text or other material proposed in this Proposal was not authored by me. Its source is as follows** (please identify which material and provide complete information on its source)**:**

ABC Co.

I agree that any material that I author, either individually or with others, in connection with work performed by an NFPA Technical Committee shall be considered to be works made for hire for the NFPA. To the extent that I retain any rights in copyright as to such material, or as to any other material authored by me that I submit for the use of an NFPA Technical Committee in the drafting of an NFPA code, standard, or other NFPA document, I hereby grant and assign all and full rights in copyright to the NFPA. I further agree and acknowledge that I acquire no rights in any publication of the NFPA and that copyright and all rights in materials produced by NFPA Technical Committees are owned by the NFPA and that the NFPA may register copyright in its own name.

Signature (Required)

PLEASE USE SEPARATE FORM FOR EACH PROPOSAL • NFPA Fax: (617) 770-3500

Mail to: Secretary, Standards Council, National Fire Protection Association, 1 Batterymarch Park, Quincy, MA 02169-7471

1/4/2008

SAMPLE

--`,,```,,,,````-`-`,,`,,`,`,,`---

Copyright National Fire Protection Association
Provided by IHS under license with NFPA
No reproduction or networking permitted without license from IHS

Not for Resale

NFPA Technical Committee Document Proposal Form

NOTE: All Proposals must be received by 5:00 pm EST/EDST on the published Proposal Closing Date.

For further information on the standards-making process, please contact the Codes and Standards Administration at 617-984-7249 or visit www.nfpa.org/codes.

For technical assistance, please call NFPA at 1-800-344-3555.

FOR OFFICE USE ONLY

Log #: _____

Date Rec'd: _____

Please indicate in which format you wish to receive your ROP/ROC ☐ electronic ☐ paper ☐ download
(Note: If choosing the download option, you must view the ROP/ROC from our website; no copy will be sent to you.)

Date _____ **Name** _____ **Tel. No.** _____

Company _____

Street Address _____ **City** _____ **State** _____ **Zip** _____

Please indicate organization represented (if any) _____

1. (a) NFPA Document Title _____ **NFPA No. & Year** _____

(**b) Section/Paragraph** _____

2. Proposal Recommends (check one): ☐ new text ☐ revised text ☐ deleted text

3. Proposal (include proposed new or revised wording, or identification of wording to be deleted): [Note: Proposed text should be in legislative format; i.e., use underscore to denote wording to be inserted (inserted wording) and strike-through to denote wording to be deleted (~~deleted wording~~).]

4. Statement of Problem and Substantiation for Proposal: (Note: State the problem that would be resolved by your recommendation; give the specific reason for your Proposal, including copies of tests, research papers, fire experience, etc. If more than 200 words, it may be abstracted for publication.)

5. Copyright Assignment

(a) ☐ I am the author of the text or other material (such as illustrations, graphs) proposed in this Proposal.

(b) ☐ Some or all of the text or other material proposed in this Proposal was not authored by me. Its source is as follows (please identify which material and provide complete information on its source)**:**

_____

I agree that any material that I author, either individually or with others, in connection with work performed by an NFPA Technical Committee shall be considered to be works made for hire for the NFPA. To the extent that I retain any rights in copyright as to such material, or as to any other material authored by me that I submit for the use of an NFPA Technical Committee in the drafting of an NFPA code, standard, or other NFPA document, I hereby grant and assign all and full rights in copyright to the NFPA. I further agree and acknowledge that I acquire no rights in any publication of the NFPA and that copyright and all rights in materials produced by NFPA Technical Committees are owned by the NFPA and that the NFPA may register copyright in its own name.

Signature (Required) _____

PLEASE USE SEPARATE FORM FOR EACH PROPOSAL • NFPA Fax: (617) 770-3500

Mail to: Secretary, Standards Council, National Fire Protection Association, 1 Batterymarch Park, Quincy, MA 02169-7471

1/4/2008

--`,,```,,,,````-`-`,,`,,`,`,,`---

Copyright National Fire Protection Association
Provided by IHS under license with NFPA
No reproduction or networking permitted without license from IHS

Not for Resale