NFPA 214

Standard on Water-Cooling Towers

2005 Edition

NFPA, 1 Batterymarch Park, Quincy, MA 02169-7471
An International Codes and Standards Organization

Copyright National Fire Protection Association
Provided by IHS under license with NFPA
No reproduction or networking permitted without license from IHS

Not for Resale

IMPORTANT NOTICES AND DISCLAIMERS CONCERNING NFPA DOCUMENTS

NOTICE AND DISCLAIMER OF LIABILITY CONCERNING THE USE OF NFPA DOCUMENTS

NFPA codes, standards, recommended practices, and guides, of which the document contained herein is one, are developed through a consensus standards development process approved by the American National Standards Institute. This process brings together volunteers representing varied viewpoints and interests to achieve consensus on fire and other safety issues. While the NFPA administers the process and establishes rules to promote fairness in the development of consensus, it does not independently test, evaluate, or verify the accuracy of any information or the soundness of any judgments contained in its codes and standards.

The NFPA disclaims liability for any personal injury, property or other damages of any nature whatsoever, whether special, indirect, consequential or compensatory, directly or indirectly resulting from the publication, use of, or reliance on this document. The NFPA also makes no guaranty or warranty as to the accuracy or completeness of any information published herein.

In issuing and making this document available, the NFPA is not undertaking to render professional or other services for or on behalf of any person or entity. Nor is the NFPA undertaking to perform any duty owed by any person or entity to someone else. Anyone using this document should rely on his or her own independent judgment or, as appropriate, seek the advice of a competent professional in determining the exercise of reasonable care in any given circumstances.

The NFPA has no power, nor does it undertake, to police or enforce compliance with the contents of this document. Nor does the NFPA list, certify, test or inspect products, designs, or installations for compliance with this document. Any certification or other statement of compliance with the requirements of this document shall not be attributable to the NFPA and is solely the responsibility of the certifier or maker of the statement.

Copyright National Fire Protection Association
Provided by IHS under license with NFPA
No reproduction or networking permitted without license from IHS
Not for Resale

ADDITIONAL NOTICES AND DISCLAIMERS

Updating of NFPA Documents

Users of NFPA codes, standards, recommended practices, and guides should be aware that these documents may be superseded at any time by the issuance of new editions or may be amended from time to time through the issuance of Tentative Interim Amendments. An official NFPA document at any point in time consists of the current edition of the document together with any Tentative Interim Amendments and any Errata then in effect. In order to determine whether a given document is the current edition and whether it has been amended through the issuance of Tentative Interim Amendments or corrected through the issuance of Errata, consult appropriate NFPA publications such as the National Fire Codes® Subscription Service, visit the NFPA website at www.nfpa.org, or contact the NFPA at the address listed below.

Interpretations of NFPA Documents

A statement, written or oral, that is not processed in accordance with Section 6 of the Regulations Governing Committee Projects shall not be considered the official position of NFPA or any of its Committees and shall not be considered to be, nor be relied upon as, a Formal Interpretation.

Patents

The NFPA does not take any position with respect to the validity of any patent rights asserted in connection with any items which are mentioned in or are the subject of NFPA codes, standards, recommended practices, and guides, and the NFPA disclaims liability for the infringement of any patent resulting from the use of or reliance on these documents. Users of these documents are expressly advised that determination of the validity of any such patent rights, and the risk of infringement of such rights, is entirely their own responsibility.

NFPA adheres to applicable policies of the American National Standards Institute with respect to patents. For further information contact the NFPA at the address listed below.

Law and Regulations

Users of these documents should consult applicable federal, state, and local laws and regulations. NFPA does not, by the publication of its codes, standards, recommended practices, and guides, intend to urge action that is not in compliance with applicable laws, and these documents may not be construed as doing so.

Copyrights

This document is copyrighted by the NFPA. It is made available for a wide variety of both public and private uses. These include both use, by reference, in laws and regulations, and use in private self-regulation, standardization, and the promotion of safe practices and methods. By making this document available for use and adoption by public authorities and private users, the NFPA does not waive any rights in copyright to this document.

Use of NFPA documents for regulatory purposes should be accomplished through adoption by reference. The term "adoption by reference" means the citing of title, edition, and publishing information only. Any deletions, additions, and changes desired by the adopting authority should be noted separately in the adopting instrument. In order to assist NFPA in following the uses made of its documents, adopting authorities are requested to notify the NFPA (Attention: Secretary, Standards Council) in writing of such use. For technical assistance and questions concerning adoption of NFPA documents, contact NFPA at the address below.

For Further Information

All questions or other communications relating to NFPA codes, standards, recommended practices, and guides and all requests for information on NFPA procedures governing its codes and standards development process, including information on the procedures for requesting Formal Interpretations, for proposing Tentative Interim Amendments, and for proposing revisions to NFPA documents during regular revision cycles, should be sent to NFPA headquarters, addressed to the attention of the Secretary, Standards Council, NFPA, 1 Batterymarch Park, P.O. Box 9101, Quincy, MA 02269-9101.

For more information about NFPA, visit the NFPA website at www.nfpa.org.

Copyright National Fire Protection Association
Provided by IHS under license with NFPA
No reproduction or networking permitted without license from IHS
Not for Resale

Copyright © 2005, National Fire Protection Association, All Rights Reserved

NFPA 214

Standard on

Water-Cooling Towers

2005 Edition

This edition of NFPA 214, *Standard on Water-Cooling Towers*, was prepared by the Technical Committee on Water-Cooling Towers, and acted on by NFPA at its November Association Technical Meeting held November 13–17, 2004, in Miami Beach, FL. It was issued by the Standards Council on January 14, 2005, with an effective date of February 7, 2005, and supersedes all previous editions.

This edition of NFPA 214 was approved as an American National Standard on February 7, 2005.

Origin and Development of NFPA 214

The subject of the protection of water-cooling towers was first considered by the NFPA Committee on Building Construction in 1957, and a progress report on that subject was published in the Advance Reports of that year. In 1958, a new Committee on Water-Cooling Towers was appointed and a Tentative Standard on Fire Protection of Water-Cooling Towers proposed by the Committee was adopted by the Association in that year. Final adoption was secured in 1959. Revised editions were published in 1961, 1966, 1968, 1971, 1976, 1977, 1983, 1988, and 1992. The 1996 edition of the standard reinforced a performance-based approach to fire protection for water-cooling towers. The scope was also changed to include protection of field-erected water-cooling towers.

The changes in the 2000 edition reflected the new *Manual of Style for NFPA Technical Committee Documents*. The 2005 edition has added requirements for pilot line detectors.

Copyright National Fire Protection Association
Provided by IHS under license with NFPA
No reproduction or networking permitted without license from IHS
Not for Resale

Technical Committee on Water-Cooling Towers

Christopher A. Spencer, *Chair*
FM Global, RI [I]
Rep. FM Global/FM Engineering & Research

Jennifer Nelson, *Secretary*
AT&T — EH&S, NY [U]

James M. Connolly, Marsh USA Inc., IL [I]
David L. Dixon, Security Fire Protection, TN [IM]
Rep. National Fire Sprinkler Association
Edgar G. Dressler, American Nuclear Insurers, FL [I]
Robert M. Gagnon, Gagnon Engineering, MD [SE]
Kenneth P. Mortensen, Marley Cooling Tower Company, KS [M]
Joseph L. Navarra, Pepco Holdings Inc., DC [U]
Rep. Edison Electric Institute
David W. Schmidt, Tyco/SimplexGrinnell-LP, OH [M]
Jess Seawell, Fort Worth, TX [M]
Rep. Cooling Technology Institute

Alternates

Kenneth E. Isman, National Fire Sprinkler Association, NY [IM]
(Alt. to D. L. Dixon)
Robert J. Smith, Jr., Marsh USA Inc., IL [I]
(Alt. to J. M. Connolly)
Terry L. Victor, Tyco/SimplexGrinnell-LP, MD [M]
(Alt. to D. W. Schmidt)

Mark T. Conroy, NFPA Staff Liaison

This list represents the membership at the time the Committee was balloted on the final text of this edition. Since that time, changes in the membership may have occurred. A key to classifications is found at the back of the document.

NOTE: Membership on a committee shall not in and of itself constitute an endorsement of the Association or any document developed by the committee on which the member serves.

Committee Scope: This Committee shall have primary responsibility for documents on the design, construction, protection, and maintenance of water-cooling towers.

--`,,```-`-`,,`,,`,`,,`---

Copyright National Fire Protection Association
Provided by IHS under license with NFPA
No reproduction or networking permitted without license from IHS
Not for Resale

Contents

Chapter 1 Administration **214–** 4
1.1 Scope **214–** 4
1.2 Purpose **214–** 4

Chapter 2 Referenced Publications **214–** 4
2.1 General **214–** 4
2.2 NFPA Publications **214–** 4
2.3 Other Publications **214–** 4

Chapter 3 Definitions **214–** 4
3.1 General **214–** 4
3.2 NFPA Official Definitions **214–** 4
3.3 General Definitions **214–** 4

Chapter 4 Location of Water-Cooling Towers **214–** 5
4.1 Construction Materials of Water-Cooling Towers **214–** 5
4.2 Fire Risk Analysis **214–** 5
4.3 Combustible Exterior Surfaces **214–** 5
4.4 Combustible Surfaces with Fixed Protection **214–** 5
4.5 Noncombustible Exterior Surfaces **214–** 5
4.6 Noncombustible Surfaces with Fixed Protection **214–** 5
4.7 Combustible Towers on Building Roofs **214–** 5
4.8 Screening **214–** 5
4.9 Fire-Resistant Partition **214–** 5

Chapter 5 Fire Protection **214–** 5
5.1 General **214–** 5
5.2 Fire Protection System Design **214–** 6
5.3 Corrosion Protection **214–** 8
5.4 Hydrant Protection **214–** 8
5.5 Standpipe Protection **214–** 8
5.6 Water Supply **214–** 8
5.7 Lightning Protection **214–** 9
5.8 Earthquake Protection **214–** 9

Chapter 6 Electrical Equipment and Wiring **214–** 9
6.1 Installation **214–** 9
6.2 Overcurrent Protection **214–** 9
6.3 Stop Fan **214–** 9
6.4 Interlock **214–** 9
6.5 Vibration-Controlled Switch **214–** 9

Chapter 7 Internal Combustion Engine–Driven Fans **214–** 9
7.1 Internal Combustion Engines **214–** 9

Chapter 8 Maintenance **214–** 9
8.1 Housekeeping **214–** 9
8.2 Smoking **214–** 9
8.3 Mechanical Inspection **214–** 9
8.4 Inspection Frequency **214–** 9
8.5 Welding and Cutting **214–** 9
8.6 Down Time **214–** 9
8.7 Access **214–** 9
8.8 Lockout **214–** 9
8.9 Temporary Supports **214–** 9
8.10 Maintenance of Fire Protection Systems ... **214–** 9

Annex A Explanatory Material **214–**10

Annex B Water-Cooling Tower Types **214–**17

Annex C Informational References **214–**20

Index **214–**21

--`,,,```-`-`,,`,,`,`,,`---
Copyright National Fire Protection Association
Provided by IHS under license with NFPA
No reproduction or networking permitted without license from IHS
Not for Resale

NFPA 214

Standard on

Water-Cooling Towers

2005 Edition

IMPORTANT NOTE: This NFPA document is made available for use subject to important notices and legal disclaimers. These notices and disclaimers appear in all publications containing this document and may be found under the heading "Important Notices and Disclaimers Concerning NFPA Documents." They can also be obtained on request from NFPA or viewed at www.nfpa.org/disclaimers.

NOTICE: An asterisk (*) following the number or letter designating a paragraph indicates that explanatory material on the paragraph can be found in Annex A.

A reference in brackets [ ] following a section or paragraph indicates material that has been extracted from another NFPA document. As an aid to the user, the complete title and edition of the source documents for mandatory extracts are given in Chapter 2 and those for nonmandatory extracts are given in Annex C. Editorial changes to extracted material consist of revising references to an appropriate division in this document or the inclusion of the document number with the division number when the reference is to the original document. Requests for interpretations or revisions of extracted text shall be sent to the technical committee responsible for the source document.

Information on referenced publications can be found in Chapter 2 and Annex C.

Chapter 1 Administration

1.1* Scope. This standard applies to fire protection for field-erected and factory-assembled water-cooling towers of combustible construction or those in which the fill is of combustible material.

1.2 Purpose. The purpose of this standard is to provide a reasonable degree of protection for life and property from fire where water-cooling towers are located.

Chapter 2 Referenced Publications

2.1 General. The documents or portions thereof listed in this chapter are referenced within this standard and shall be considered part of the requirements of this document.

2.2 NFPA Publications. National Fire Protection Association, 1 Batterymarch Park, Quincy, MA 02169-7471.

NFPA 13, *Standard for the Installation of Sprinkler Systems,* 2002 edition.

NFPA 14, *Standard for the Installation of Standpipe and Hose Systems,* 2003 edition.

NFPA 25, *Standard for the Inspection, Testing, and Maintenance of Water-Based Fire Protection Systems,* 2002 edition.

NFPA 37, *Standard for the Installation and Use of Stationary Combustion Engines and Gas Turbines,* 2002 edition.

NFPA 51B, *Standard for Fire Prevention During Welding, Cutting, and Other Hot Work,* 2003 edition.

NFPA 70, *National Electrical Code®,* 2002 edition.

NFPA 72®, National Fire Alarm Code®, 2002 edition.

NFPA 251, *Standard Methods of Tests of Fire Endurance of Building Construction and Materials,* 1999 edition.

NFPA 780, *Standard for the Installation of Lightning Protection Systems,* 2004 edition.

2.3 Other Publications.

2.3.1 ASTM Publication. American Society for Testing and Materials, 100 Barr Harbor Drive, West Conshohocken, PA 19428-2959.

ASTM A 153A/153M, *Standard Specification for Zinc Coating (Hot Dip) on Iron and Steel Hardware,* 2004.

Chapter 3 Definitions

3.1 General. The definitions contained in this chapter shall apply to the terms used in this standard. Where terms are not defined in this chapter or within another chapter, they shall be defined using their ordinarily accepted meanings within the context in which they are used. *Merriam-Webster's Collegiate Dictionary,* 11th edition, shall be the source for the ordinarily accepted meaning.

3.2 NFPA Official Definitions.

3.2.1* Approved. Acceptable to the authority having jurisdiction.

3.2.2* Authority Having Jurisdiction (AHJ). An organization, office, or individual responsible for enforcing the requirements of a code or standard, or for approving equipment, materials, an installation, or a procedure.

3.2.3 Labeled. Equipment or materials to which has been attached a label, symbol, or other identifying mark of an organization that is acceptable to the authority having jurisdiction and concerned with product evaluation, that maintains periodic inspection of production of labeled equipment or materials, and by whose labeling the manufacturer indicates compliance with appropriate standards or performance in a specified manner.

3.2.4* Listed. Equipment, materials, or services included in a list published by an organization that is acceptable to the authority having jurisdiction and concerned with evaluation of products or services, that maintains periodic inspection of production of listed equipment or materials or periodic evaluation of services, and whose listing states that either the equipment, material, or service meets appropriate designated standards or has been tested and found suitable for a specified purpose.

3.2.5 Shall. Indicates a mandatory requirement.

3.2.6 Should. Indicates a recommendation or that which is advised but not required.

3.3 General Definitions.

3.3.1 Air Travel. The horizontal distance through the fill measured just below the distribution basin.

3.3.2* Cell. The smallest tower subdivision that can function as an independent unit with regard to air and water flow.

3.3.3 Combustible. Capable of undergoing combustion.

3.3.4* Cooling Tower.

3.3.4.1* *Counterflow.* A cooling tower classification in which the water flows countercurrent to the airflow.

Copyright National Fire Protection Association
Provided by IHS under license with NFPA
No reproduction or networking permitted without license from IHS
Not for Resale

3.3.4.2* ***Crossflow.*** A cooling tower classification in which the airflow is essentially perpendicular to the flow of water.

3.3.4.3* ***Mechanical-Draft.*** A cooling tower classification in which air movement depends on fans or blowers.

3.3.4.4* ***Natural-Draft.*** A cooling tower containing no fans or blowers, in which air movement depends on the difference in densities of the heated air inside the tower and the cooler air outside.

3.3.5 Film Fill. Water-cooling media made of formed plastic sheets and placed parallel to tower air travel at evenly spaced intervals.

3.3.6* Fire-Resistant Partition. A tight, continuous partition suitable for use in a cooling tower environment that has a fire resistance rating of 20 minutes or more.

3.3.7 Noncombustible. Not capable of supporting combustion. [**80,** 1999]

3.3.8 Pilot Line Detector. An automatic sprinkler or thermostatic fixed temperature release device used as a detector to pneumatically or hydraulically release the system actuation valve.

3.3.9 System Actuation Valve. The main valve that controls the flow of water into the fire protection system.

Chapter 4 Location of Water-Cooling Towers

4.1 Construction Materials of Water-Cooling Towers.

4.1.1 Where the cooling tower's structure, fan, distribution system, louvers, and fill and drift eliminator materials are all of noncombustible materials, a fire protection system shall not be required.

4.1.2 If any of the construction materials are combustible and the factors in Section 4.2 necessitate it, fire protection shall be provided in accordance with Chapter 5, and towers shall be located in accordance with Chapter 4.

4.2* Fire Risk Analysis. A fire risk analysis shall be conducted. The following are some of the factors that shall be considered in determining the extent and method of fire protection required for induced-draft and natural-draft water-cooling towers:

(1) Importance to continuity of operation
(2)*Size and construction of tower
(3) Type of tower
(4) Location of tower
(5) Water supply
(6) Value of tower
(7) Climate
(8)*Water delivery time
(9) Environment
(10) Rooftop towers
(11) Limited access
(12) Construction of materials *(see Section 4.1)*

4.3 Combustible Exterior Surfaces. Water-cooling towers with combustible exterior surfaces, including the deck, distribution basins, and so forth, shall be located at least 30.5 m (100 ft) from the following hazards:

(1) Structures or processes that emit sparks or flying brands under ordinary circumstances, such as chimneys, incinerators, flare stacks, or cob burners
(2) Materials or processes of severe fire hazard, such as petroleum processing and storage tanks, explosives manufacturing or storage, and petroleum product pipelines and pumping stations

4.4 Combustible Surfaces with Fixed Protection. Towers with combustible exterior surfaces that are provided with fixed exposure protection in accordance with 5.2.10 shall be permitted to be located closer than 30.5 m (100 ft) from the hazards listed in Section 4.3.

4.5 Noncombustible Exterior Surfaces. Towers with noncombustible exterior surfaces shall be located 12 m (40 ft) or more from the hazards listed in Section 4.3.

4.6 Noncombustible Surfaces with Fixed Protection. Towers with noncombustible exterior surfaces that are provided with fixed interior fire protection installed in accordance with Chapter 5 shall be permitted to be located closer than 12 m (40 ft) from the hazards listed in Section 4.3.

4.7 Combustible Towers on Building Roofs. Combustible water-cooling towers located on building roofs or other locations to which access for manual fire fighting is restricted or difficult shall be provided with a protection system in accordance with Chapter 5.

4.8 Screening.

4.8.1 Open areas or space between a combustible cold-water basin and the ground or roof of a building upon which it is located shall be effectively screened to prevent the accumulation of waste combustible material under the tower and to prevent the use of such areas or space under the tower for the storage of combustible material.

4.8.2 Fire protection shall be permitted to be installed in lieu of screening.

4.9 Fire-Resistant Partition.

4.9.1 A fire-resistant partition for water-cooling towers shall be tested in accordance with NFPA 251.

4.9.2 The partition shall extend from 0.3 m (1 ft) below the operating water level of the cold-water basin to the underside of the fan deck (counterflow towers) or distribution basin (crossflow towers).

Chapter 5 Fire Protection

5.1 General.

5.1.1* Types of Suppression Systems. If the fire risk analysis results in Section 4.2, or the conditions of Section 4.7 exist, requiring a fire protection system, one of the following general types of systems shall be used:

(1) Open-head deluge system
(2) Closed-head dry-pipe system
(3) Wet-pipe automatic sprinkler system
(4) Closed-head preaction system

5.1.2 Complete Plans and Data Required. A complete plan showing piping arrangement, location of sprinklers, fixed detectors, and operating equipment such as valves and deluge valves, together with hydraulic calculations, water requirements, and water supply information, shall be submitted to the authority having jurisdiction for approval before installation.

Copyright National Fire Protection Association
Provided by IHS under license with NFPA
No reproduction or networking permitted without license from IHS
Not for Resale

5.1.2.1 Plans shall be drawn to scale and shall include the details necessary to indicate clearly all of the equipment and its arrangement.

5.1.2.2 Plans shall show location of new work with relation to existing structures, water-cooling towers, and water supplies.

5.1.2.3 Plans shall include a note listing the types of materials used in the system.

5.2 Fire Protection System Design.

5.2.1 General. Fire protection systems shall be designed, installed, and tested in accordance with NFPA 13.

5.2.2 Types of Systems.

5.2.2.1* Because the counterflow tower design lends itself to either closed- or open-head systems, the following systems shall be permitted to be used:

(1) Wet-pipe
(2) Dry-pipe
(3) Preaction
(4) Deluge

5.2.2.2* The open-head deluge system shall be used in crossflow towers to maximize the water distribution and heat detection activation.

5.2.3 Minimum Rate of Application.

5.2.3.1 Under the fan decks of counterflow towers, the rate of application of water shall be 20.4 mm/min (0.5 gpm/ft^2), including fan opening.

5.2.3.2 Under the fan decks of crossflow towers, the rate of application of water shall be 13.45 mm/min (0.33 gpm/ft^2), including fan opening.

5.2.3.3 Over the fill areas of crossflow towers, the rate of application of water shall be 20.4 mm/min (0.5 gpm/ft^2).

5.2.4 Types and Locations of Discharge Outlets.

5.2.4.1* Counterflow Towers.

5.2.4.1.1 The discharge outlets shall be located under the fan deck and fan opening.

5.2.4.1.2 Except under the fan opening, all discharge outlets shall have deflector distances installed in accordance with NFPA 13.

5.2.4.1.3 Closed-head discharge outlets for dry-pipe and preaction systems shall be installed in the upright position only.

5.2.4.2* Crossflow Towers.

5.2.4.2.1 The discharge outlets protecting the plenum area shall be located under the fan deck and in the fan opening.

5.2.4.2.2 Discharge outlets protecting the fill shall be located under the distribution basin on either the louver or drift eliminator side, discharging horizontally through the joist channels.

5.2.4.2.3 Placement and Pressure of Discharge Devices.

5.2.4.2.3.1 Towers with an air travel dimension longer than the maximum allowable for the discharge device being used shall have discharge devices placed on both sides of the fill area in each joist channel.

5.2.4.2.3.2 The pressure at each discharge device shall be adequate to provide protection for half of the length of the fill measured along the air travel.

5.2.4.2.4 Number of Discharge Devices.

5.2.4.2.4.1 Where joist channels are wider than 0.6 m (2 ft), more than one discharge device shall be required per joist channel.

5.2.4.2.4.2 If the discharge device being used is listed for the width of the joist channel being protected, one discharge device per joist channel shall be permitted to be used.

5.2.4.3* Extended Fan Decks. On towers having extended fan decks that completely enclose the distribution basin, the discharge outlets protecting the fill area shall be located over the basin, under the extension of the fan deck.

5.2.4.3.1 These discharge outlets shall be open directional spray nozzles or other approved spray devices arranged to discharge 14.26 mm/min (0.35 gpm/ft^2) directly on the distribution basin and 6.11 mm/min (0.15 gpm/ft^2) on the underside of the fan deck extension.

5.2.4.3.2 On towers having extended fan decks that do not completely enclose the hot-water basin, outlets protecting the fill shall be located under the distribution basin in accordance with 5.2.4.2.2.

5.2.4.4 Combustible Fan Decks. For deluge systems using directional spray nozzles in the pendant position, provisions shall be made to protect the underside of a combustible fan deck at a minimum rate of 6.11 mm/min (0.15 gpm/ft^2), which shall be included as part of the application rate specified in 5.2.3.

5.2.4.5* Water Basin Covers. On film-filled towers that have solid, hot-water basin covers over the complete basin, the discharge outlets protecting the fill area shall be permitted to be located under the basin covers.

5.2.4.5.1 These discharge outlets shall be open directional spray nozzles or other approved devices arranged to discharge 20.4 mm/min (0.50 gpm/ft^2) into the distribution basin horizontally, with some of the spray splashing up and on the underside of the water basin covers.

5.2.4.5.2 On towers having basin covers that do not completely enclose the hot-water basin, outlets protecting the fill shall be located under the distribution basin in accordance with 5.2.4.2.2.

5.2.5 Pipe, Fittings, and Hangers.

5.2.5.1* Piping shall be installed in accordance with the requirements of NFPA 13.

5.2.5.2* Piping or tubing used within the cooling tower shall be metallic and approved for fire protection use, except as outlined in 5.2.5.2.1.

5.2.5.2.1 Piping or tubing used for pneumatic detection systems shall be permitted to be of other materials suitable for use in a cooling tower environment.

5.2.5.3 Hydraulic calculations shall be made in accordance with NFPA 13.

5.2.5.4 All fittings shall be of a type specifically approved for fire protection use.

5.2.5.4.1 In dry sections of the system piping, which can be exposed to possible fire conditions, ferrous fittings shall be of steel, malleable iron, or ductile iron, except as outlined in 5.2.5.4.2.

--`,,`,,`-`-`,,`,,`,`,,`---
Copyright National Fire Protection Association
Provided by IHS under license with NFPA
No reproduction or networking permitted without license from IHS
Not for Resale

5.2.5.4.2 Cast-iron fittings shall be permitted to be used in pneumatic detection piping.

5.2.5.5 Approved, gasketed, groove-type fittings shall be permitted to connect pipe in fire-exposed areas where the fire protection system is operated automatically.

5.2.5.6 Where piping is supported from structural members of a cooling tower, the attachment shall be made so that the structural member is not split or otherwise damaged.

5.2.6 Valves.

5.2.6.1 General.

5.2.6.1.1 Valves shall be installed in accordance with NFPA 13.

5.2.6.1.2 Shutoff valves and automatically operated water control valves, if provided, shall be located as follows:

(1) Outside the fire-exposed area
(2) As close to the cooling tower as possible to minimize the amount of pipe to the discharge device
(3) Where they will be accessible during a fire emergency

5.2.6.2 Manual Release Valve.

5.2.6.2.1 Remote manual release valves, where required, shall be conspicuously located and accessible during a fire emergency.

5.2.6.2.2 Where remote manual release valves are not required, an inspector's test valve shall be provided for each pilot-head-operated system.

5.2.7* Strainers. Strainers shall be required for systems utilizing discharge devices with waterways of less than 9.5 mm (0.375 in.) diameter.

5.2.8* Heat Detectors. Where deluge or preaction systems are used, heat detectors shall be installed and shall be selected from either of the types in 5.2.8.1 or 5.2.8.2.

5.2.8.1 Pilot Line Detection Systems. Where pilot line detection systems are installed for actuation of deluge or preaction systems, heat detectors shall be installed in accordance with 5.2.8.1.1 through 5.2.8.1.4.

5.2.8.1.1 Protection.

5.2.8.1.1.1 Corrosion Protection. Detection equipment shall be protected from corrosion in accordance with Section 5.3.

5.2.8.1.1.2 Protective Canopy. Detection equipment requiring protection from the weather shall be provided with a canopy, hood, or other protection.

5.2.8.1.1.3* Mechanical Damage. Detection equipment shall be located so as to be protected from mechanical damage.

5.2.8.1.1.4 Mounting. Pilot line detectors shall be permitted to be supported by their piping or tubing.

5.2.8.1.2 Selection, Location, and Spacing of Pilot Line Detectors.

5.2.8.1.2.1 The selection, location, and spacing of pilot line detectors for the actuation of fire protection systems shall be in accordance with 5.2.8.1.2.1(A) through 5.2.8.1.2.1(E).

(A) In mechanical-draft towers, pilot line detectors shall be located under the fan deck at the circumference of the fan opening and under the fan opening where necessary to comply with the spacing requirements in 5.2.8.1.2.1(B). *(For extended fan decks, see 5.2.8.2.3.)*

(B) Pilot line detectors shall be spaced not more than 2.4 m (8 ft) apart in any direction including the fan opening. Temperature ratings shall be selected in accordance with operating conditions, but shall be no less than intermediate.

(C) Pilot line detectors shall not be required to be installed under the fan deck area in the fill area of crossflow towers with unenclosed distribution basins.

(D) A pilot line detector shall be provided over each fan drive motor where the motor is located so that it is not within the protected area of the tower.

(E) Specially listed pilot line detection devices specific to water-cooling towers shall be permitted to be used at spacings that have been evaluated and listed in accordance with the following:

(1) Data obtained from field experience
(2) Tests
(3) Engineering surveys
(4) Manufacturer's recommendations
(5) Detectors' listing criteria for water cooling towers
(6) Nature of the hazard being protected
(7) Both normal and abnormal air velocities
(8) Range of anticipated temperatures
(9) Maximum expected rates of temperature change under non-fire conditions
(10) Number and height of structural levels
(11) Effects of environment, including humidity
(12) Presence and magnitude of electromagnetic interference
(13) Presence of obstructions that might retard or mitigate timely detection
(14) Other conditions that might affect the efficacy of the fire detection employed

5.2.8.1.2.2 Detectors shall be located so as to promptly respond to a fire, flammable gas release, or other design condition.

5.2.8.1.2.3 The detection system shall be capable of detecting a fire up to the elevation of the highest level of protected equipment surface.

5.2.8.1.3 Pilot Line Detectors.

5.2.8.1.3.1 Pilot line detectors shall be standard response type unless specifically listed for water cooling tower applications.

5.2.8.1.3.2 The temperature rating of pilot line detectors shall be selected in accordance with NFPA 13.

5.2.8.1.3.3 Where located under a fan deck or fan deck enclosure, the deflector of a pilot line detector shall be positioned 2.54 cm (1 in.) to 30 cm (12 in.) below an unobstructed fan deck or 2.54 cm (1 in.) to 15.24 cm (6 in.) below the structural members of an obstructed fan deck but not more than a total of 56 cm (22 in.) below the fan deck.

5.2.8.1.3.4 The obstruction-to-water-distribution rules for automatic sprinklers in NFPA 13 shall not be required to be followed where pilot line detectors are used.

5.2.8.1.3.5 Two or More Systems. Where there are two or more adjacent water spray systems in one area controlled by separate detection systems, the pilot line detectors on each system shall be spaced independently.

5.2.8.1.4 Arrangement and Supervision of Pneumatic and Hydraulic Systems. Pneumatically and hydraulically operated systems shall be supervised in a manner such that failure will result in positive notification of the abnormal condition, unless the failure results in operation of the water spray system.

--`,,```-`-`,,`,,`,`,,`---
Copyright National Fire Protection Association
Provided by IHS under license with NFPA
No reproduction or networking permitted without license from IHS
Not for Resale

5.2.8.2 Electrical Heat Detection Systems. Where electrical detection systems are installed for actuation of deluge or preaction systems, heat detectors shall be installed in accordance with the applicable sections of *NFPA 72*.

5.2.8.2.1 In mechanical-draft towers, electrical heat detectors shall be located under the fan deck at the circumference of the fan opening and under the fan opening where necessary to comply with the spacing requirements of 5.2.8.2.2 through 5.2.8.2.2.2. *(For extended fan decks, see 5.2.8.3.)*

5.2.8.2.2* Electrical fixed-temperature detectors shall be spaced not more than 2.4 m (8 ft) apart in any direction including the fan opening.

5.2.8.2.2.1 Temperature ratings shall be selected in accordance with operating conditions, but shall be no less than intermediate.

5.2.8.2.2.2 Electrical fixed-temperature detectors shall not be required to be installed under the fan deck area of crossflow towers with unenclosed distribution basins.

5.2.8.2.3 On towers having extended fan decks that completely enclose the distribution basin, electrical heat detectors shall be located under the fan deck extension in accordance with standard, indoor-spacing rules for the type detectors used in accordance with *NFPA 72*.

5.2.8.2.3.1 Where the fan deck extension is 4.9 m (16 ft) or less and this dimension is the length of the joist channel, then only one row of detectors centered on and at right angles to the joist channels shall be required. Spacing between detectors shall be in accordance with *NFPA 72*.

5.2.8.2.3.2 On towers having extended fan decks that do not completely enclose the hot-water basin, electrical heat detectors shall not be required under the fan deck extension.

5.2.8.3 Where electrical heat detectors are inaccessible during tower operation, an accessible test detector shall be provided for each detection zone.

5.2.8.4 Electrical heat detector components exposed to corrosive vapors or liquids shall be protected by materials of construction or by protective coatings applied by the equipment manufacturer.

5.2.9 Protection for Fan Drive Motor.

5.2.9.1 A water discharge outlet activated by a pilot line detector or a listed electrical heat detector shall be provided over each fan drive motor where the motor is located so that it is not within the protected area of the tower.

5.2.9.2 Provision shall be made to interlock the fan motors with the fire protection system so that the cooling tower fan motors are stopped in the cell(s) for which the system is actuated.

5.2.9.3 Where the continued operation of the fans is vital to the process, a manual override switch shall be permitted to be provided to reactivate the fan when it is determined that there is no fire.

5.2.10 Exposure Protection.

5.2.10.1 Where any combustible exterior surfaces of a tower, including the fan deck and distribution basins, are less than 30.5 m (100 ft) from significant concentrations of combustibles such as structures or piled material, the combustible exposed surfaces of the tower shall be protected by an automatic water spray system.

5.2.10.2 Systems for exterior protection shall be designed with the same attention and care as interior systems.

5.2.10.2.1 Pipe sizing shall be based on hydraulic calculations.

5.2.10.2.2 Water supply and discharge rate shall be based on a minimum 6.11 mm/min (0.15 gpm/ft^2) for all protected surfaces.

5.2.11 Suppression Design. The design and installations shall comply with the applicable sections of NFPA 13.

5.3 Corrosion Protection.

5.3.1* Piping, fittings, hangers, braces, and attachment hardware including fasteners shall be hot-dipped galvanized steel in accordance with ASTM A 153A/153M, or other materials having a superior corrosion resistance.

5.3.1.1 Exposed pipe threads and bolts on fittings shall be protected against corrosion.

5.3.1.2 All other components shall be corrosion resistant or protected against corrosion by a coating.

5.3.2* Wax-type coatings shall not be used on devices without fusible elements.

5.3.3* Special care shall be taken in the handling and installation of wax-coated or similar sprinklers to avoid damaging the coating.

5.3.3.1 Corrosion-resistant coatings shall not be applied to the sprinklers by anyone other than the manufacturer of the sprinklers.

5.3.3.2 In all cases, any damage to the protective coating occurring at the time of installation shall be repaired at once using only the coating of the manufacturer of the sprinkler in an approved manner, so that no part of the sprinkler is exposed after the installation has been completed.

5.4* Hydrant Protection. Hydrants shall not be located closer than 12.2 m (40 ft) from towers.

5.5* Standpipe Protection. Towers with any combustible construction located on a building 15.3 m (50 ft) or more in height shall be provided with Class III standpipe protection with hose connections within 61 m (200 ft) of all parts of the tower.

5.5.1 Sufficient hose shall be provided to reach all parts of the tower.

5.5.2 Provision shall be made for completely draining all exposed standpipe lines during winter.

5.5.3 Hose equipment at each standpipe hose connection on the roof shall be protected from the weather in a cabinet or enclosure in accordance with NFPA 14.

5.6 Water Supply.

5.6.1 Deluge Systems.

5.6.1.1* Where all cells of a cooling tower are protected by a single deluge system, the water supply shall be adequate to supply all discharge outlets on that system.

5.6.1.2 Where two or more deluge systems are used to protect a cooling tower and fire-resistant partitions are not provided between the deluge systems, the water supply shall be adequate to supply all discharge outlets in the two most hydraulically demanding adjacent systems.

Copyright National Fire Protection Association
Provided by IHS under license with NFPA
No reproduction or networking permitted without license from IHS
Not for Resale

5.6.1.3* Where two or more deluge systems are separated by fire-resistant partitions, the water supply shall be adequate to supply all discharge outlets in the single most hydraulically demanding system.

5.6.1.4* On towers having extended fan decks that completely enclose the distribution basin, one of the following options shall be employed:

(1) The water supply shall be designed for all deluge systems
(2) Heat barriers shall be installed under the extended fan deck to separate deluge system zones in order to prevent the total number of deluge systems operating from exceeding the number of deluge systems for which the water supply was designed. Heat barriers shall extend from the fan deck structure to the distribution basin dividers.

5.6.2 Wet, Dry, and Preaction Systems.

5.6.2.1* Where each cell of the cooling tower is separated by a fire-resistant partition, the water supply shall be adequate to supply all discharge outlets in the hydraulically most demanding single cell.

5.6.2.2* Where fire-resistant partitions are not provided between each cell of a cooling tower, the water supply shall be adequate to supply all discharge outlets in the two most hydraulically demanding adjoining cells.

5.6.3 Hose Streams. Water supplies shall be sufficient to include a minimum of 1892.5 L/min (500 gpm) for hose streams in addition to the sprinkler requirements.

5.6.4 Duration. A water supply adequate for at least a 2-hour duration shall be provided for the combination of the water supply specified in 5.6.1 or 5.6.2, plus the hose stream demand specified in 5.6.3.

5.7* Lightning Protection. Lightning protection, where provided, shall be installed in accordance with the provisions of NFPA 780.

5.8 Earthquake Protection. Where provided, earthquake-resistant construction shall be in accordance with applicable sections of NFPA 13.

Chapter 6 Electrical Equipment and Wiring

6.1 Installation. Installation of all electrical equipment and wiring pertaining to water-cooling towers shall be in accordance with NFPA 70.

6.2* Overcurrent Protection. Electric motors that are driving fans shall be provided with overcurrent protection devices as mandated by NFPA 70.

6.3 Stop Fan. A remote fan motor switch shall be provided to stop the fan in case of fire.

6.4 Interlock. When a fire protection system is installed, provisions shall be made to interlock the fan motors with the fire protection system as set forth in Chapter 5.

6.5 Vibration-Controlled Switch. A listed, automatic, vibration-controlled switch shall be provided to automatically shut down fan motors.

Chapter 7 Internal Combustion Engine–Driven Fans

7.1 Internal Combustion Engines.

7.1.1 Electric motors or steam turbines shall be the preferred drives to operate fans on water-cooling towers.

7.1.2 Where neither electric motor nor steam turbines are available, internal combustion engines shall be permitted to be used, provided they are installed, used, and maintained in accordance with NFPA 37.

Chapter 8 Maintenance

8.1 Housekeeping. Areas around towers located on the ground shall be kept free of grass, weeds, brush, or combustible waste materials.

8.2 Smoking.

8.2.1 Smoking shall not be permitted on or adjacent to any cooling tower of combustible construction.

8.2.2 Signs stating the provisions of 8.2.1 shall be posted and maintained, and this regulation shall be strictly enforced.

8.3 Mechanical Inspection. Forced- and induced-draft towers in continuous operation shall be checked for excessive heating in motors and for excessive fan vibration.

8.4 Inspection Frequency.

8.4.1 At least semiannually, the fan assemblies, including the motors and speed reducers, shall be checked, both during operation and when shut down, for excessive wear or vibration, improper lubrication, corrosion, or other factors that could result in failure.

8.4.2 Where conditions require it, corrective action shall be taken.

8.5 Welding and Cutting. Where work on the tower requires welding or cutting, it shall be done in accordance with NFPA 51B.

8.6 Down Time.

8.6.1* All automatic fire protection on the tower shall be operable during periods when the towers are shut down for repairs or other reasons.

8.6.2* Where the tower does not have automatic fire protection, special protection shall be provided until the tower is back in service.

8.7 Access.

8.7.1 Access to the tops of water-cooling towers for fire fighting and maintenance shall be provided by an approved stairway or ladder.

8.7.2 Towers in excess of 37 m (120 ft) in any dimension shall be provided with not less than two means of access remote from each other.

8.8 Lockout.

8.8.1 Motors, speed reduction units, and drive shafts shall be accessible for servicing and maintenance.

8.8.2 Lockout or tagout of fan equipment shall be conducted when maintenance work is being performed in the vicinity of fans.

8.9 Temporary Supports. After maintenance work is completed, all scaffolding, boards, temporary supports, and other temporary materials shall be removed from the tower.

8.10 Maintenance of Fire Protection Systems. Maintenance of fire protection systems shall be in accordance with NFPA 25.

Copyright National Fire Protection Association
Provided by IHS under license with NFPA
No reproduction or networking permitted without license from IHS
Not for Resale

Annex A Explanatory Material

Annex A is not a part of the requirements of this NFPA document but is included for informational purposes only. This annex contains explanatory material, numbered to correspond with the applicable text paragraphs.

A.1.1 This standard does not apply any more or less strictly to factory-assembled units than did earlier revisions. Because these units have typically been steel frame/structure with PVC fill, the protection requirements should be evaluated in accordance with Section 4.2, with item (2) being specifically noted. In all cases, Section 4.2 should be reviewed for making the determination with regard to the installation of fire suppression systems. In some cases, no fire suppression is required.

The fire record of water-cooling towers indicates a failure to recognize the extent or seriousness of the potential fire hazard of these structures either while in operation or when temporarily shut down. Water-cooling towers of combustible construction, especially those of the induced-draft type, present a potential fire hazard even when in full operation because of the existence of relatively dry areas within the towers.

A significant percentage of fires in water-cooling towers of combustible construction are caused by ignition from outside sources such as incinerators, smokestacks, or exposure fires. Fires in water-cooling towers can create an exposure hazard to adjacent buildings and processing units. Therefore, distance separation from buildings and sources of ignition or the use of noncombustible construction are primary considerations in preventing these fires.

Ignition within these structures can be caused by welding or cutting operations, smoking, overheated bearings, electrical failures, and other heat- or spark-producing sources.

Fires have also occurred during the construction of water-cooling towers. Measures should be taken during construction to prevent the accumulation of combustible waste materials such as wood borings, shavings, scrap lumber, or other easily ignited materials. "No Smoking" regulations and strict control of welding and other heat- or spark-producing operations should be enforced. Wetting down combustible portions of the tower during idle periods of construction is a good fire prevention practice.

Where cooling water is supplied to heat exchangers that are used for cooling flammable gases or liquids or combustible liquids, and where the cooling water pressure is less than that of the material being cooled, an unusual hazard to the cooling tower can be created by the return of the flammables or combustibles to the cooling tower water distribution system.

A.3.2.1 Approved. The National Fire Protection Association does not approve, inspect, or certify any installations, procedures, equipment, or materials; nor does it approve or evaluate testing laboratories. In determining the acceptability of installations, procedures, equipment, or materials, the authority having jurisdiction may base acceptance on compliance with NFPA or other appropriate standards. In the absence of such standards, said authority may require evidence of proper installation, procedure, or use. The authority having jurisdiction may also refer to the listings or labeling practices of an organization that is concerned with product evaluations and is thus in a position to determine compliance with appropriate standards for the current production of listed items.

A.3.2.2 Authority Having Jurisdiction (AHJ). The phrase "authority having jurisdiction," or its acronym AHJ, is used in NFPA documents in a broad manner, since jurisdictions and approval agencies vary, as do their responsibilities. Where public safety is primary, the authority having jurisdiction may be a federal, state, local, or other regional department or individual such as a fire chief; fire marshal; chief of a fire prevention bureau, labor department, or health department; building official; electrical inspector; or others having statutory authority. For insurance purposes, an insurance inspection department, rating bureau, or other insurance company representative may be the authority having jurisdiction. In many circumstances, the property owner or his or her designated agent assumes the role of the authority having jurisdiction; at government installations, the commanding officer or departmental official may be the authority having jurisdiction.

A.3.2.4 Listed. The means for identifying listed equipment may vary for each organization concerned with product evaluation; some organizations do not recognize equipment as listed unless it is also labeled. The authority having jurisdiction should utilize the system employed by the listing organization to identify a listed product.

A.3.3.2 Cell. Each cell can have one or more fans or stacks and one or more distribution systems. For the purposes of this standard, a cell within a hyperbolic tower is considered the area bounded by fire-resistant partitions.

A.3.3.4 Cooling Tower. See Figure B.1(a).

A.3.3.4.1 Counterflow. See Figure B.1(d).

A.3.3.4.2 Crossflow. See Figure B.1(e).

A.3.3.4.3 Mechanical-Draft. When the fans or blowers are at the air inlet, the tower is considered forced-draft. When the fans or blowers are at the air exit, the tower is considered induced-draft. *[See Figure B.1(c).]*

A.3.3.4.4 Natural-Draft. Natural-draft towers contain no fans or blowers. *[See Figure B.1(b).]*

A.3.3.6 Fire-Resistant Partition. Examples of some types of construction that meet this requirement are 12.7 mm (½ in.) asbestos cement board, 12.7 mm (½ in.) plywood, or 19.1 mm (¾ in.) tongue-and-groove boarding where installed on both sides of wood studs. Other types of materials should be tested in accordance with NFPA 251.

Occasionally, the water level is lowered or the cold-water basin is emptied (e.g., for tower maintenance). Where the tower is empty for an extended period of time, the fire partition should be extended to the bottom of the cold-water basin, for example, by installing a temporary extension. The temporary fire partition should remain in place, except where it interferes with the maintenance activity in a single cell, until the tower is returned to service and the water level in the basin is returned to normal.

A.4.2 No standard can be promulgated that guarantees the elimination of fires in water-cooling towers. Technology in this area is under constant development and is reflected in revisions to this standard. The user of this standard should recognize the complexity of fire protection requirements for water-cooling towers. Therefore, the designer is cautioned that this standard is not a design handbook. This standard does not do away with the need for the engineer or for competent engineering judgment. It is intended that a designer, capable of applying more complete and rigorous analysis to special or unusual problems, has latitude in the development of such designs. In such cases, the designer is responsible for demonstrating the validity of the approach.

Copyright National Fire Protection Association
Provided by IHS under license with NFPA
No reproduction or networking permitted without license from IHS
Not for Resale

Fire experience for mechanical-draft towers does not indicate the general need for automatic fire protection systems. However, exposure protection provided as required by 5.2.10 might be necessary.

A.4.2(2) Several fire tests can be used to evaluate the fire risk related to water-cooling tower materials. The most suitable tests are those that demonstrate low fire risk where tested in a configuration that approximates the large scale of the installation. Tests such as ASTM E 136 and ASTM E 84 have limitations. The test methods do not duplicate the larger extent of the hazard in its final installation and are not necessarily suitable or generally satisfactory for materials that soften, flow, or melt under fire conditions.

A.4.2(8) Piping arrangements, system capacities, and supervisory air pressures should be designed such that the time for water delivery to the most remote discharge device is minimized. For all water suppression systems using detection, the detection system should be designed to cause actuation of the special water control valve within 20 seconds under expected exposure conditions (*see NFPA 15*).

A.5.1.1 The use of antifreeze sprinkler systems in water-cooling towers is not recommended. While in theory this type of system would function, the use of antifreeze systems in water-cooling towers presents problems not encountered in usual antifreeze applications.

Due to the inaccessibility of the piping during normal operation of the cooling tower, it is almost impossible to do any maintenance work or to make routine inspections. The corrosion problem can be quite serious in water-cooling towers, and leaks in the system do not readily become apparent. These leaks would result in loss of the antifreeze solution and could result in freezing of the system.

Local ordinances in many areas prohibit the use of these systems.

A.5.2.2.1 A deluge system provides a higher degree of protection where water supplies are adequate. In climates that are subject to freezing temperatures, a deluge system minimizes the possibility of failure due to pipes freezing.

A.5.2.2.2 The crossflow design is such that it is difficult to locate sprinklers in the most desirable spots for both water distribution and heat detection. This situation can be solved by separating these two functions and using separate water discharge and detection systems.

A.5.2.4.1 Figure A.5.2.4.1(a) through Figure A.5.2.4.1(d) show typical plan and section views of fire protection systems in counterflow water-cooling towers. For the requirement to screen area beneath tower in Figure A.5.2.4.1(b), see 4.8.1.

A.5.2.4.2 Figure A.5.2.4.2(a) through Figure A.5.2.4.2(d) show typical plan and section views of fire protection systems in crossflow water-cooling towers.

A.5.2.4.3 Location of the nozzle relative to surfaces to be protected should be determined by the particular nozzle's discharge characteristics. Care should also be taken in the selection of nozzles to obtain waterways not easily obstructed by debris, sediment, sand, and so forth, in the water. *[See Figure A.5.2.4.3(a) and Figure A.5.2.4.3(b).]*

A.5.2.4.5 Figure A.5.2.4.5 shows a detail of the sprinklers and target nozzles for an enclosed distribution basin in a crossflow tower.

A.5.2.5.1 In towers where vibration is anticipated to cause movement of the fire protection system, resulting in wear of water piping, detection piping, or tubing at the hangers, it is necessary to install vibration absorbers between the hangers and the pipe.

Special consideration should be given to the support of detection piping or tubing due to its small diameter. Thin-wall or nonmetallic pipe or tubing usually requires close spacing of hangers for adequate support.

A.5.2.5.2 Where plastic piping or tubing is used for pneumatic detection systems, consideration should be given to the effects of ultraviolet radiation.

A.5.2.7 See NFPA 15 for further details.

A.5.2.8 Over the years, rate of rise detection systems were installed for the actuation of deluge or preaction systems. Some of these systems are still in the field and are being maintained in accordance with their listing. The design criterion was that these rate-of-rise detectors were spaced not more than 4.6 m (15 ft) apart in any direction. In pneumatic-type systems, for detectors inside the tower, these detectors were to be no more than one detector for each mercury check in towers operating in cold climates, and two detectors for each mercury check in towers used during the warm months only or year-round in warm climates. Also, these detectors were to be no more than four detectors for each mercury check where the detectors are located outside the tower.

A.5.2.8.1.1.3 Consideration should be given to the protection of the detection system in areas subject to earthquake damage. Some guidance on this topic is provided in NFPA 13.

A.5.2.8.2.2 Due to the extremely humid atmosphere and potentially corrosive conditions in water-cooling towers, it is very difficult to maintain electrical detection equipment. Experience has shown that even with weatherproof equipment and wiring practices, an electrical system malfunctions frequently. Therefore, the information in the subparagraphs of this section is based on the use of detectors operating on pneumatic or hydraulic principles.

A.5.3.1 Corrosion of exposed pipe threads and bolts on fittings is a concern. Therefore, care should be taken to ensure that corrosion protection is as equivalent to hot-dipped galvanized steel as possible. Experience has shown that cadmium-plated components corrode at an accelerated rate compared to hot-dipped galvanized components.

If circulating tower water quality has the following characteristics, an upgrade of hot-dipped galvanized sprinkler components should be considered:

(1) Calcium, as $CaCO_3$ <50 ppm
(2) Chloride >450 ppm as Cl^- (270 ppm as NaCl)
(3) pH <6.5
(4) pH >9.0
(5) Hot water temperature >60°C (140°F)

Other unusual water uses include geothermal power, paper processing, and Stretford process, each of which can require component material upgrade.

Copyright National Fire Protection Association
Provided by IHS under license with NFPA
No reproduction or networking permitted without license from IHS
Not for Resale

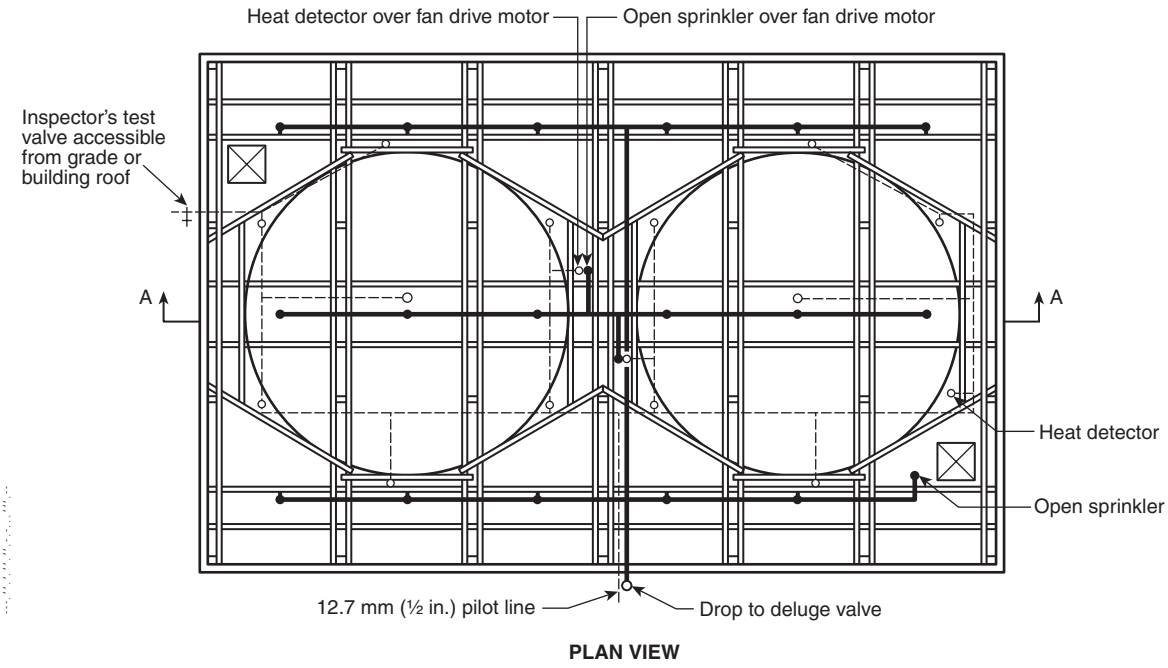

FIGURE A.5.2.4.1(a) Plan View, Typical Deluge Fire Protection Arrangement for Counterflow Towers.

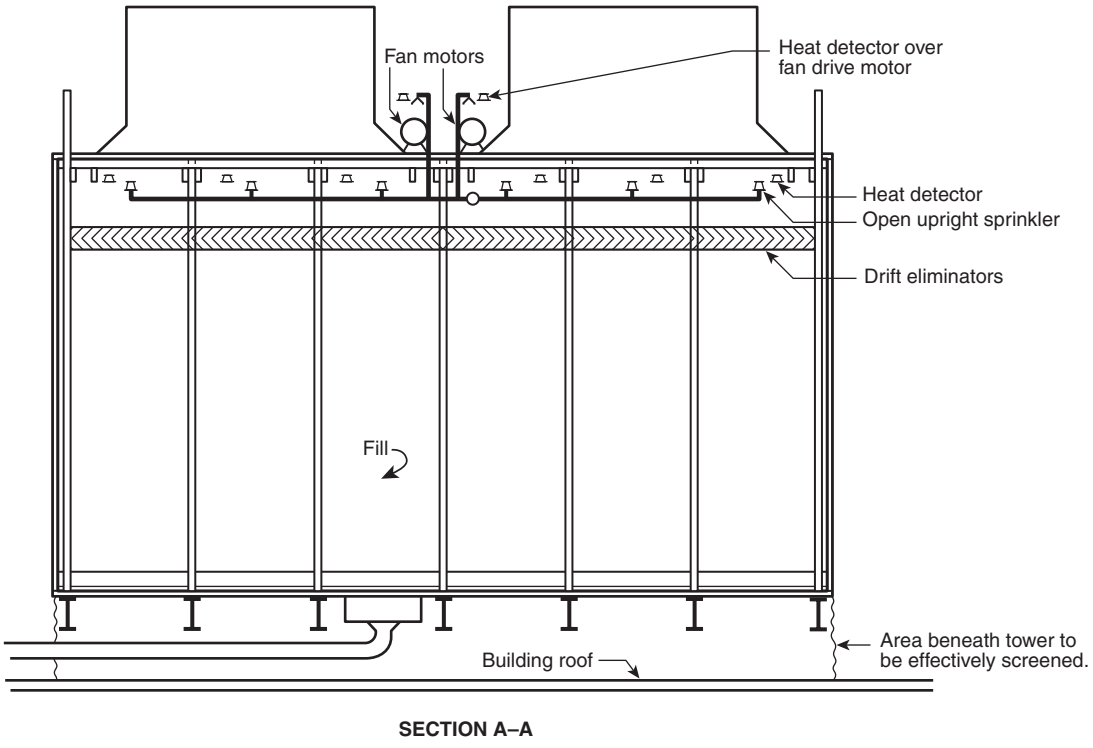

FIGURE A.5.2.4.1(b) Section View, Typical Deluge Fire Protection Arrangement for Counterflow Towers.

Copyright National Fire Protection Association
Provided by IHS under license with NFPA
No reproduction or networking permitted without license from IHS
Not for Resale

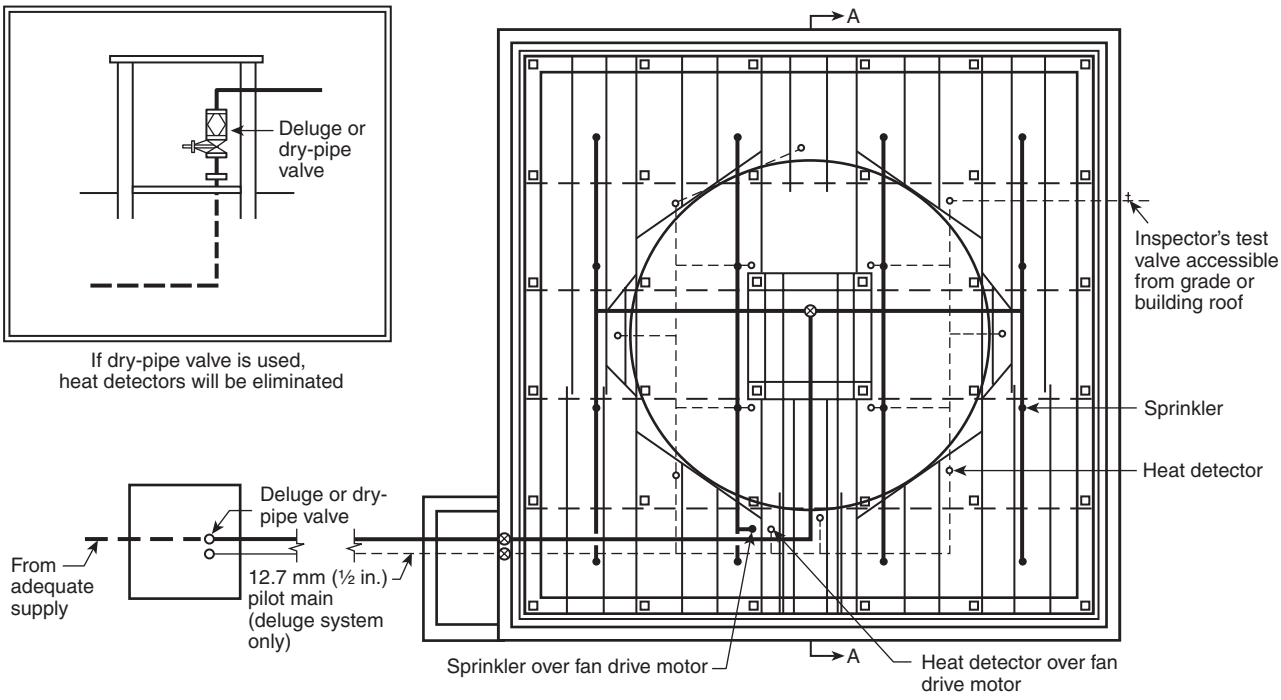

FIGURE A.5.2.4.1(c) Plan View, Typical Deluge or Dry-Pipe Fire Protection Arrangement for Counterflow Towers.

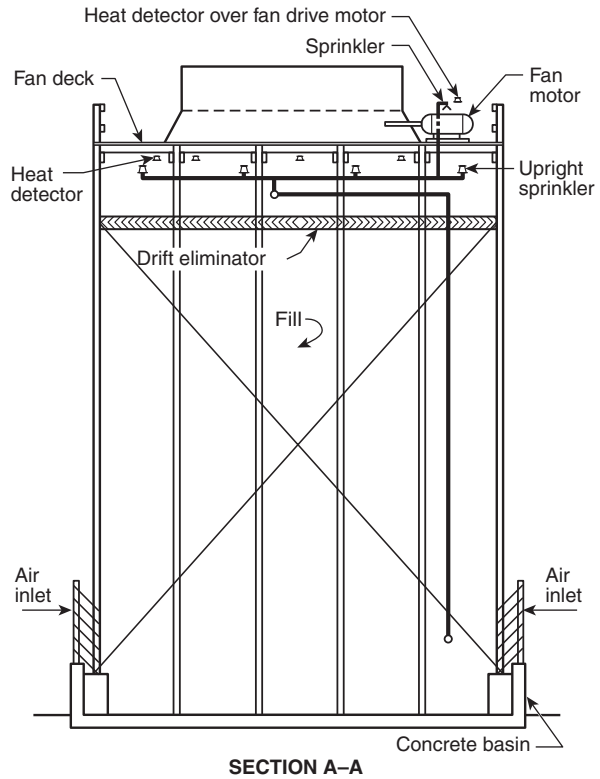

FIGURE A.5.2.4.1(d) Section View, Typical Deluge or Dry-Pipe Fire Protection Arrangement for Counterflow Towers.

A.5.3.2 Approved discharge devices are made of nonferrous material and are corrosion-resistant to normal atmospheres. Some atmospheres require special coatings on the discharge devices.

A.5.3.3 Corrosion attacks the exposed metal and, in time, creeps under the wax coating.

A.5.4 Hydrant protection should be provided within 61 m (200 ft) of all parts of towers having combustible construction and located on the ground or on buildings less than 15.3 m (50 ft) in height. A hose house and standard hose house equipment should be provided at each hydrant. *(See* NFPA 24 *for further details.)*

A.5.5 Standpipes should preferably be located in stair towers. If located on an open roof, they should not be closer than 12.2 m (40 ft) to the cooling tower. For a definition of Class III standpipe protection, see NFPA 14.

A.5.6.1.1 Where a single deluge system protects an entire water-cooling tower, regardless of the number of cells, the water supply needs to be based on the entire deluge system coverage. *(See Figure A.5.6.1.1.)*

A.5.6.1.3 Deluge systems separated by fire-resistant partitions can be treated independently as worst-case water supply situations. *(See Figure A.5.6.1.3.)*

A.5.6.1.4 Acceptable materials are 9.5 mm (⅜ in.) plywood or 4.8 mm (3⁄16 in.) asbestos cement board on one side of studs.

A.5.6.2.1 Water-cooling towers with each cell separated by a fire-resistant partition and protected by wet, dry, or preaction system(s) should have the water supply based on the most demanding individual cell. *(See Figure A.5.6.2.1.)*

A.5.6.2.2 Without fire-resistant partitions between cells, the worst-case situation involves the most demanding adjoining cells. *(See Figure A.5.6.2.2.)*

Copyright National Fire Protection Association
Provided by IHS under license with NFPA
No reproduction or networking permitted without license from IHS
Not for Resale

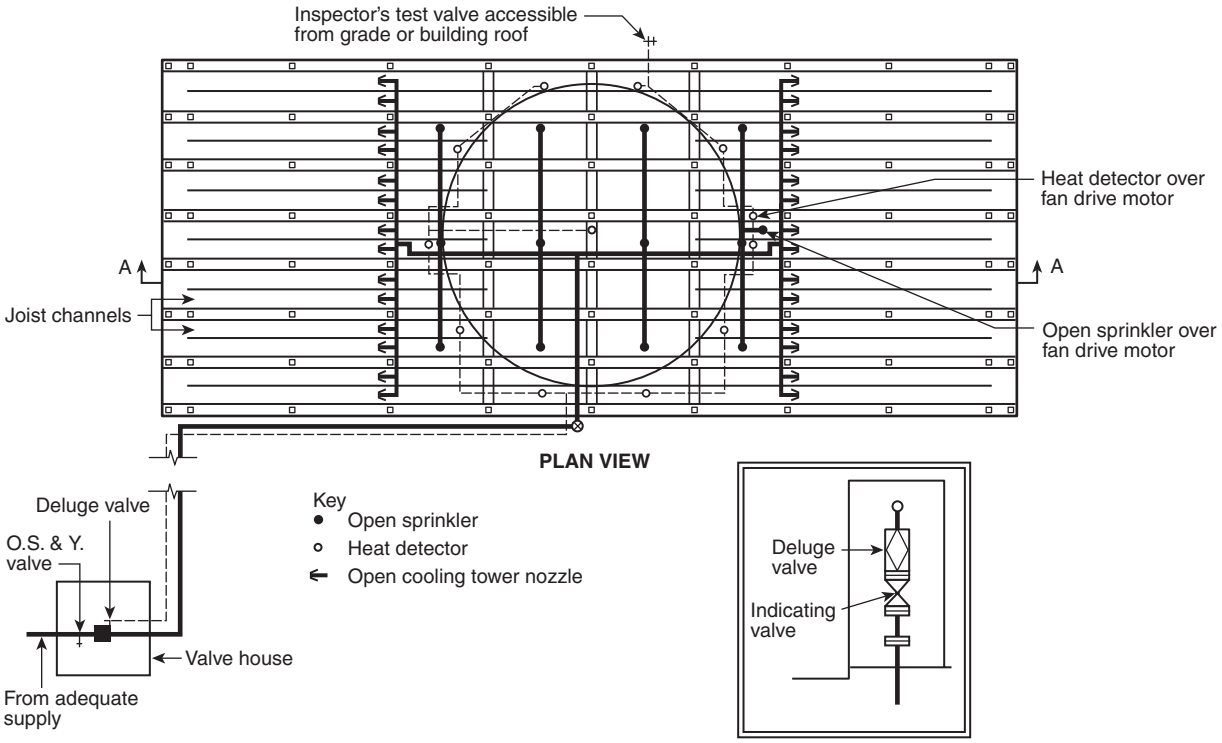

FIGURE A.5.2.4.2(a) Plan View, Typical Deluge Fire Protection Arrangement for Crossflow Towers.

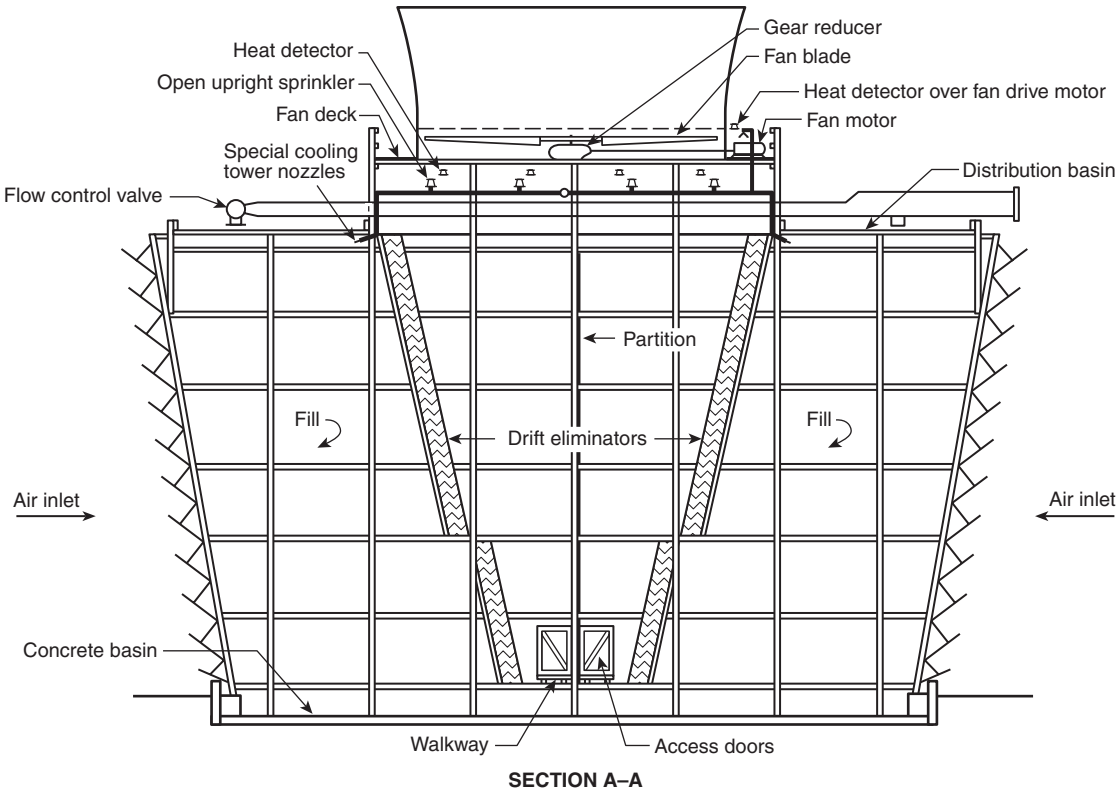

FIGURE A.5.2.4.2(b) Section View, Typical Deluge Fire Protection Arrangement for Crossflow Towers.

Copyright National Fire Protection Association
Provided by IHS under license with NFPA
No reproduction or networking permitted without license from IHS
Not for Resale

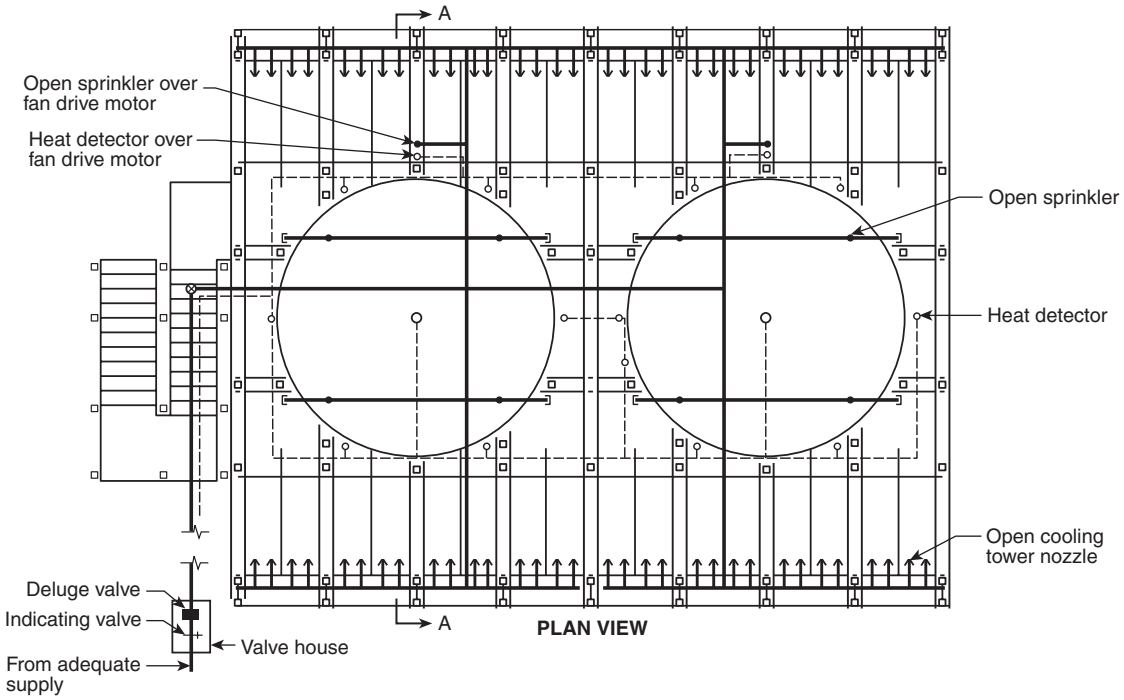

Note: Where air seal boards prevent installation of cooling tower nozzles on drift eliminator side of fill, this nozzle location should be used.

FIGURE A.5.2.4.2(c) Plan View, Typical Deluge Fire Protection Arrangement for Multicell Crossflow Towers.

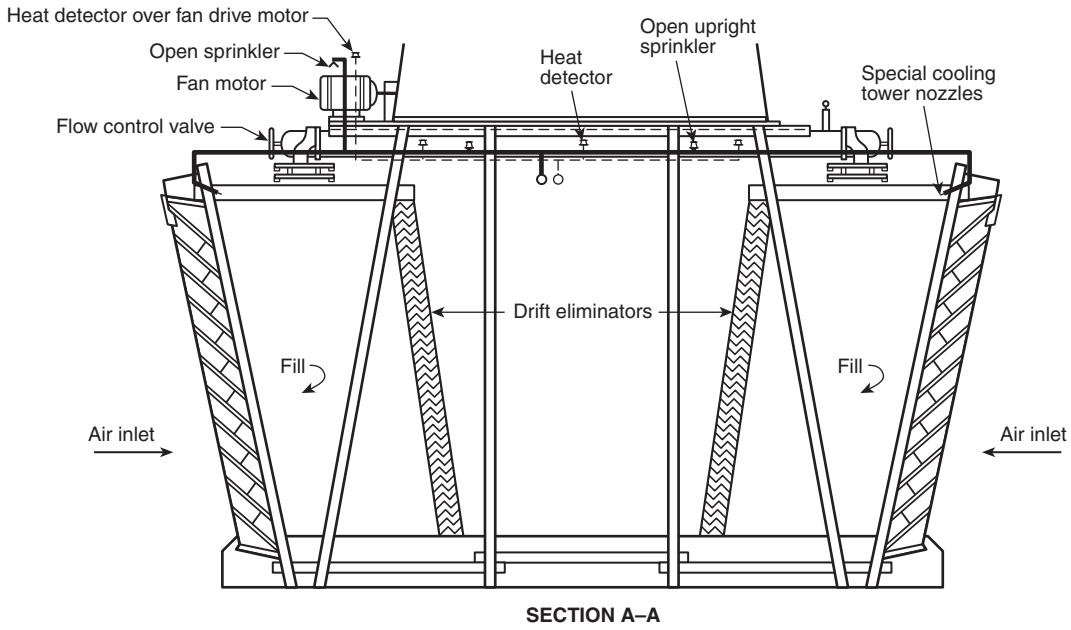

Note: Where air seal boards prevent installation of cooling tower nozzles on drift eliminator side of fill, this nozzle location should be used.

FIGURE A.5.2.4.2(d) Section View, Typical Deluge Fire Protection Arrangement for Multicell Crossflow Towers.

Copyright National Fire Protection Association
Provided by IHS under license with NFPA
No reproduction or networking permitted without license from IHS
Not for Resale

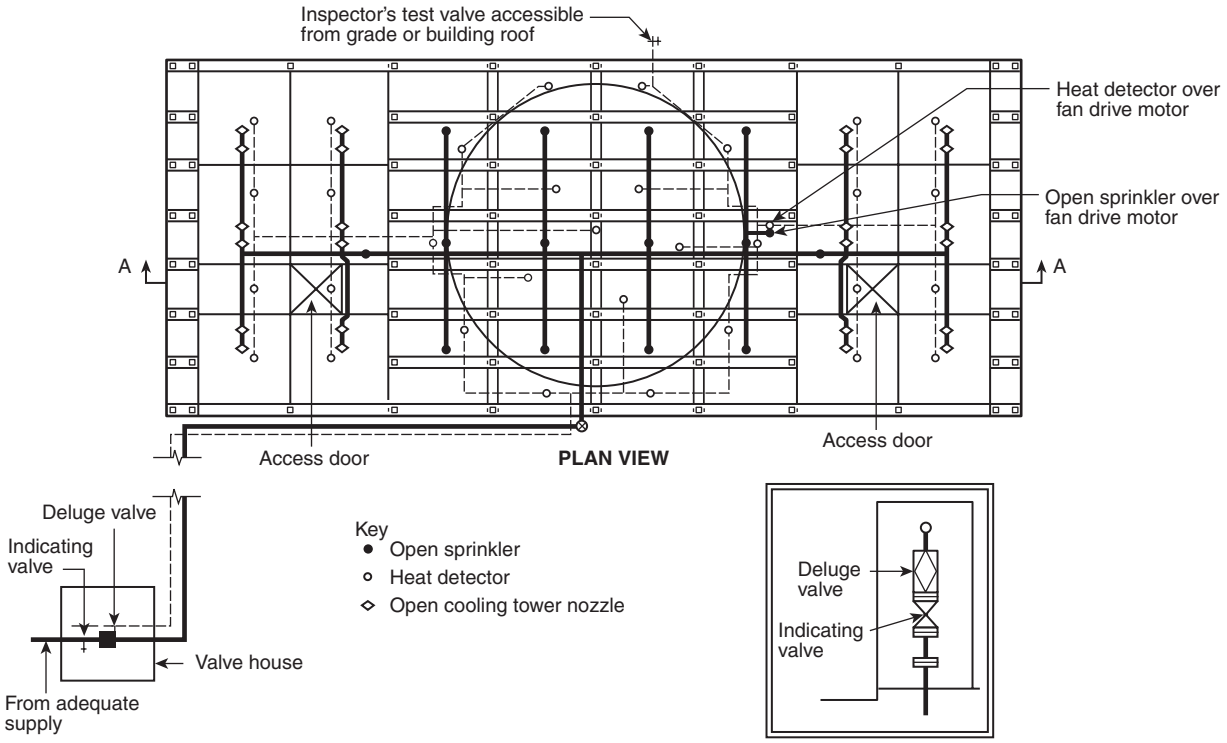

FIGURE A.5.2.4.3(a) Plan View, Typical Deluge Fire Protection Arrangement for Crossflow Towers with Completely Enclosed Distribution Basins.

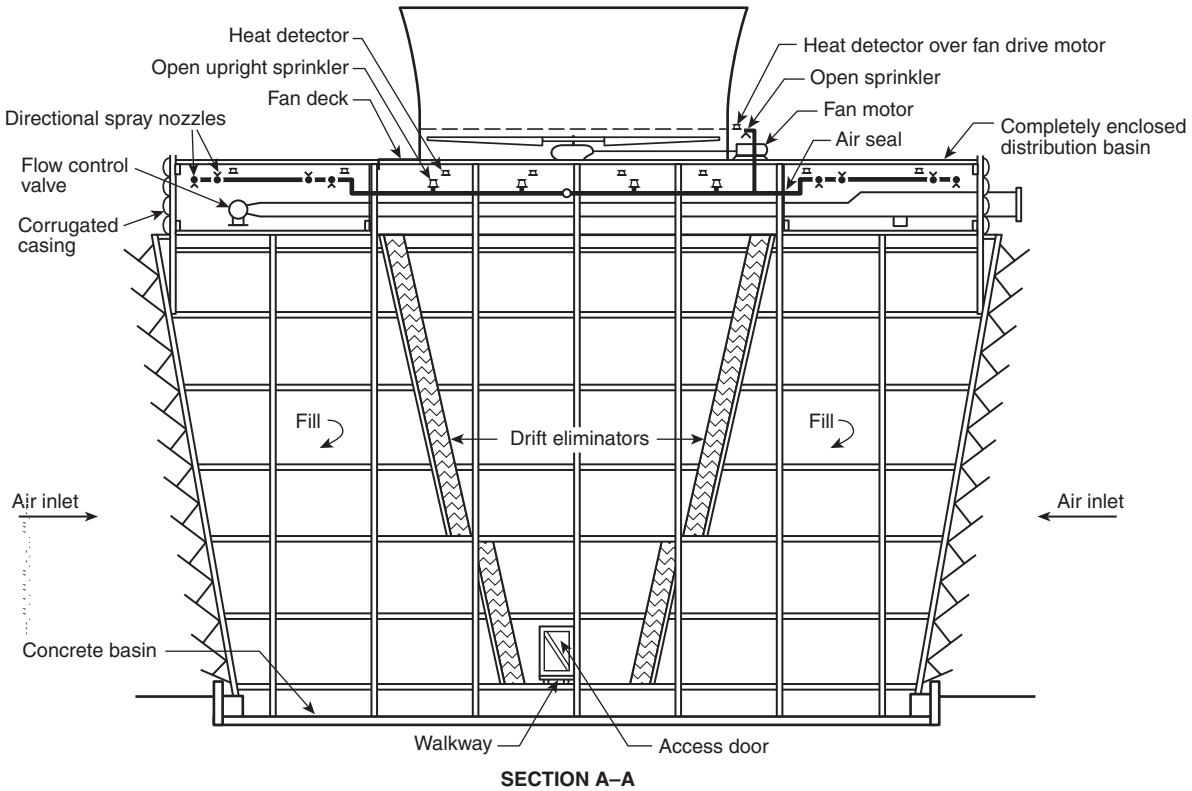

FIGURE A.5.2.4.3(b) Section View, Typical Deluge Fire Protection Arrangement for Crossflow Towers with Completely Enclosed Distribution Basins.

Copyright National Fire Protection Association
Provided by IHS under license with NFPA
No reproduction or networking permitted without license from IHS
Not for Resale

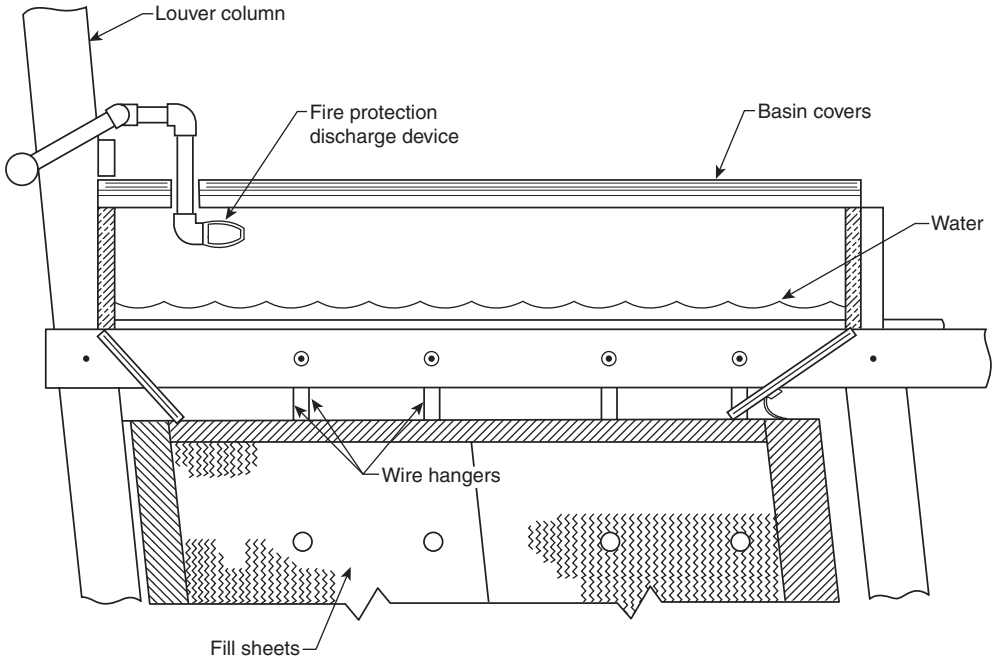

FIGURE A.5.2.4.5 Typical Deluge Fire Protection Arrangement for Crossflow Towers with Covers Completely Enclosing Distribution Basins.

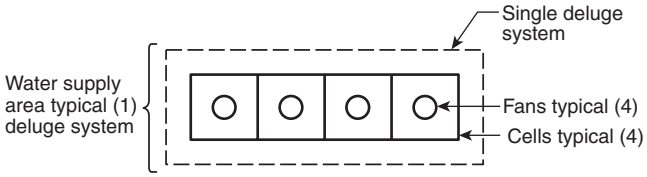

FIGURE A.5.6.1.1 Single Deluge System.

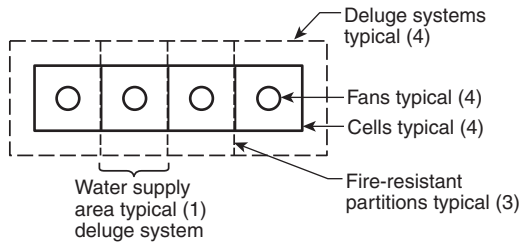

FIGURE A.5.6.1.3 Multiple Deluge Systems.

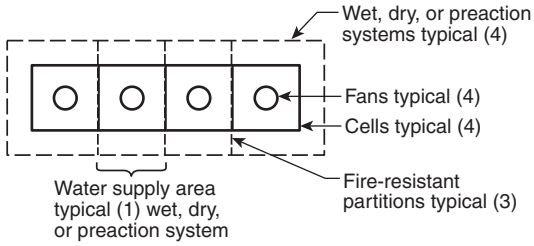

FIGURE A.5.6.2.1 Multiple Wet, Dry, or Preaction Systems with Fire-Resistant Partitions.

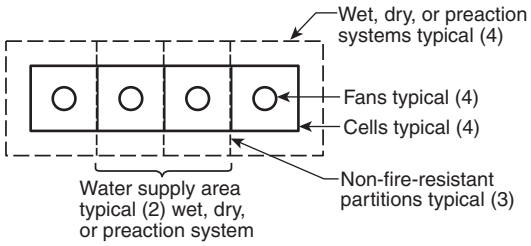

FIGURE A.5.6.2.2 Multiple Wet, Dry, or Preaction Systems with No Fire-Resistant Partitions.

A.5.7 Towers located on roofs of buildings in certain geographical locations can be particularly susceptible to lightning damage.

A.6.2 Motors should be totally enclosed to protect them from dirt or moisture and to prevent sparks from reaching adjacent combustible construction.

A.8.6.1 During periods when combustible water-cooling towers are shut down for repairs or other reasons, the towers become particularly susceptible to ignition as the wood dries out.

A.8.6.2 Examples of special protection are watch service or intermittent wetting, or both.

Annex B Water-Cooling Tower Types

This annex is not a part of the requirements of this NFPA document but is included for informational purposes only.

B.1 Figure B.1(a) through Figure B.1(e) represent typical configurations of the many types of water-cooling towers.

Copyright National Fire Protection Association
Provided by IHS under license with NFPA
No reproduction or networking permitted without license from IHS
Not for Resale

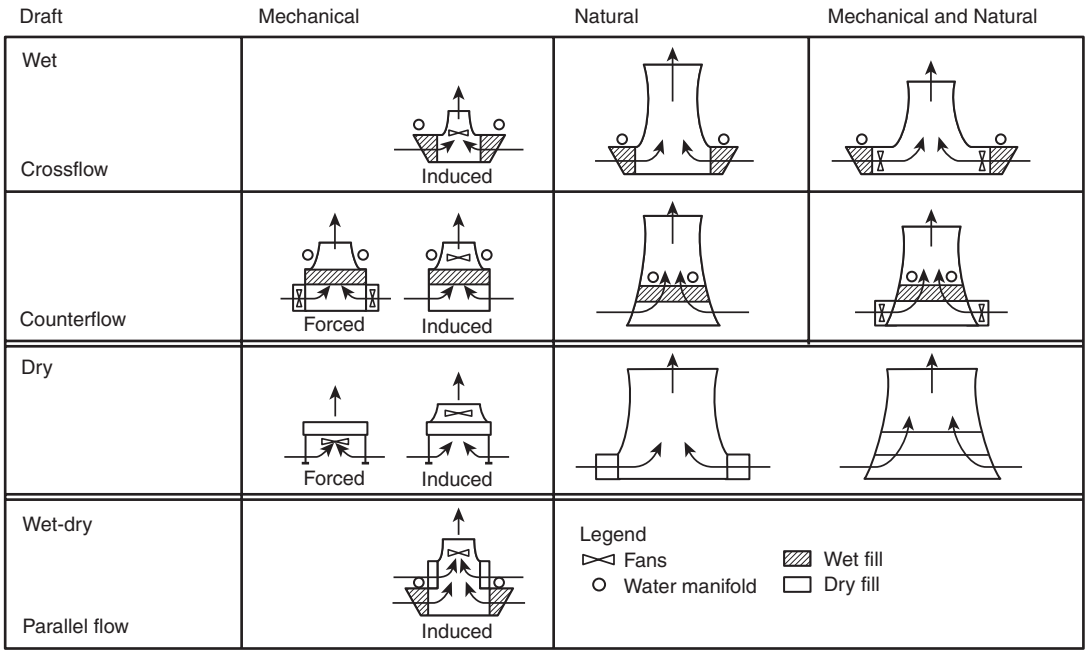

FIGURE B.1(a) Summary of Typical Water-Cooling Towers. *(Courtesy of FM Global)*

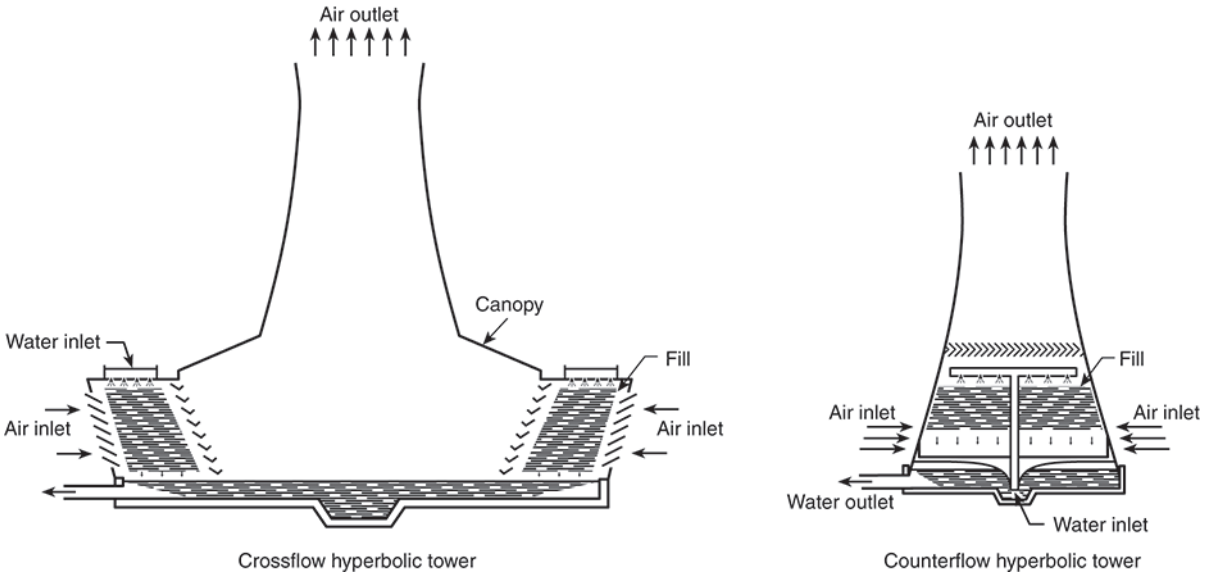

FIGURE B.1(b) Types of Natural-Draft Towers.

--`,,`````-`-`,,`,,`,`,,`---
Copyright National Fire Protection Association
Provided by IHS under license with NFPA
No reproduction or networking permitted without license from IHS
Not for Resale

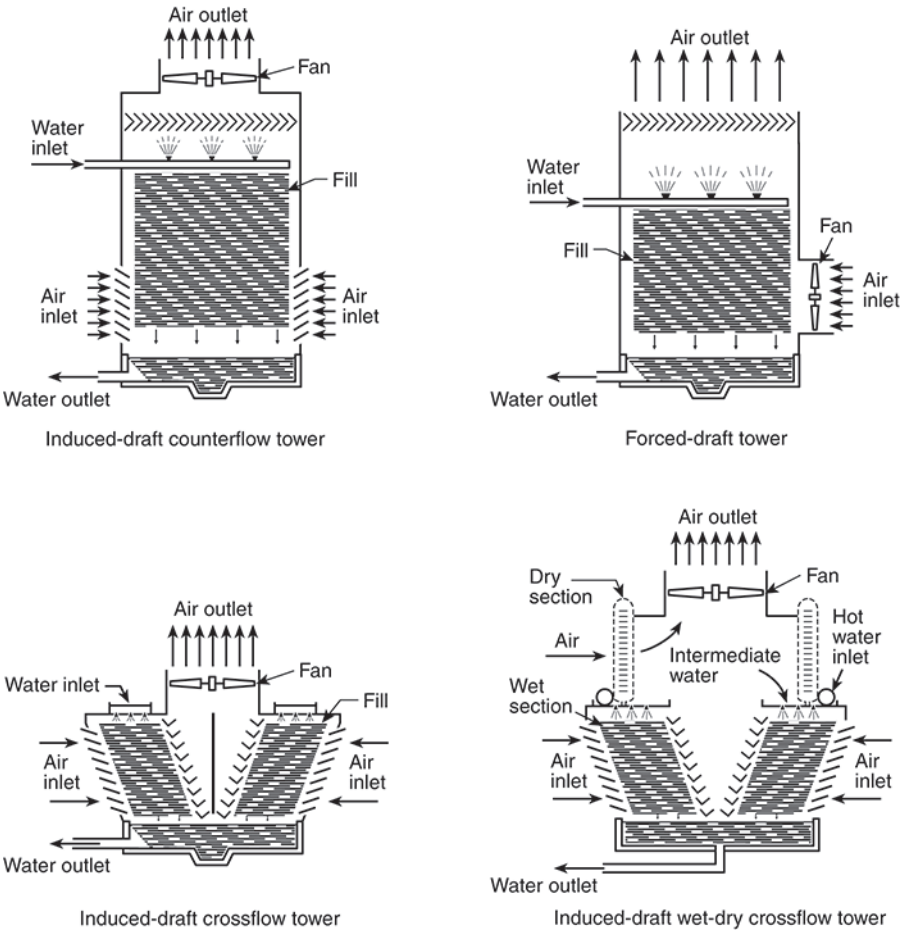

FIGURE B.1(c) Types of Mechanical-Draft Towers.



FIGURE B.1(d) Typical Induced-Draft Counterflow Water-Cooling Tower.

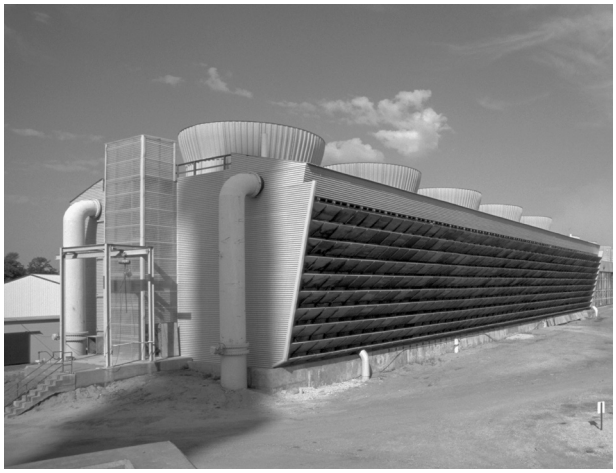

FIGURE B.1(e) Typical Induced-Draft Crossflow Water-Cooling Tower.

--`,,,`-`-`,,`,,`,`,,`---

Copyright National Fire Protection Association
Provided by IHS under license with NFPA
No reproduction or networking permitted without license from IHS
Not for Resale

Annex C Informational References

C.1 Referenced Publications. The following documents or portions thereof are referenced within this standard for informational purposes only and are thus not part of the requirements of this document unless also listed in Chapter 2.

C.1.1 NFPA Publications. National Fire Protection Association, 1 Batterymarch Park, Quincy, MA 02169-7471.

NFPA 13, *Standard for the Installation of Sprinkler Systems*, 2002 edition.

NFPA 14, *Standard for the Installation of Standpipe and Hose Systems*, 2003 edition.

NFPA 15, *Standard for Water Spray Fixed Systems for Fire Protection*, 2001 edition.

NFPA 24, *Standard for the Installation of Private Fire Service Mains and Their Appurtenances*, 2002 edition.

NFPA 251, *Standard Methods of Tests of Fire Endurance of Building Construction and Materials*, 1999 edition.

C.1.2 Other Publications.

C.1.2.1 ASTM Publications. American Society for Testing and Materials, 100 Barr Harbor Drive, West Conshohocken, PA 19428-2959.

ASTM E 84, *Standard Test Method for Surface Burning Characteristics of Building Materials*, 1995.

ASTM E 136, *Standard Test Method for Behavior of Materials in a Vertical Tube Furnace at 750°C,* 1994.

C.1.2.2 Other Publications. *Merriam-Webster's Collegiate Dictionary,* 11th edition, Merriam-Webster, Inc., Springfield, MA, 2003.

C.2 Informational References. (Reserved)

C.3 References for Extracts. The following documents are listed here to provide reference information, including title and edition, for extracts given throughout the nonmandatory sections of this standard as indicated by a reference in brackets [ ] following a section or paragraph. These documents are not a part of the requirements of this document unless also listed in Chapter 2 for other reasons.

NFPA 80, *Standard for Fire Doors and Fire Windows*, 1999 edition.

Copyright National Fire Protection Association
Provided by IHS under license with NFPA
No reproduction or networking permitted without license from IHS
Not for Resale

Index

© 2005 National Fire Protection Association. All Rights Reserved.

The copyright in this index is separate and distinct from the copyright in the document that it indexes. The licensing provisions set forth for the document are not applicable to this index. This index may not be reproduced in whole or in part by any means without the express written permission of NFPA.

-A-

Access, fire fighting and maintenance 8.7
Air travel (definition) 3.3.1
Application rate, minimum water 5.2.3
Approved (definition) 3.2.1, A.3.2.1
Authority having jurisdiction (definition) 3.2.2, A.3.2.2

-C-

Cells 5.6.1.1, 5.6.2.1, 5.6.2.2, A.5.6.1.1, A.5.6.2.1, A.5.6.2.2
Definition 3.3.2, A.3.3.2
Combustible (definition) 3.3.3
Combustible exterior surfaces 4.3, 4.4, 5.2.10
Combustible materials 1.1, 4.7, 4.8, A.1.1
Construction materials and operations ..... 1.1, 4.1, 4.2(2), A.1.1, A.4.2(2)
Corrosion protection ..... 5.2.8.1.1.1, 5.3, A.5.1.1, A.5.3.1 to A.5.3.3
Counterflow towers ..... Fig. B.1(d)
Definition 3.3.4.1
Design 5.2.2.1, A.5.2.2.1
Discharge outlets 5.2.4.1, A.5.2.4.1
Minimum rate of application 5.2.3.1
Crossflow towers ..... Fig. B.1(e)
Definition 3.3.4.2
Design 5.2.2.2, A.5.2.2.2
Discharge outlets 5.2.4.2, A.5.2.4.2
Minimum rate of application 5.2.3.2, 5.2.3.3
Cutting 8.5

-D-

Definitions ..... Chap. 3
Deluge systems, open-head ..... 5.1.1(1), 5.2.2.1, 5.2.2.2, A.5.2.2.1, A.5.2.2.2
Discharge outlets ..... 5.2.4, A.5.2.4, Figs. A.5.2.4.1(a) to (d), Figs. A.5.2.4.2(a) to (d), Figs. A.5.2.4.3(a) and (b), Fig. A.5.2.4.5
Heat detectors 5.2.8, A.5.2.8
Water supply 5.6.1, A.5.6.1
Detectors
Heat 5.2.8, 5.2.9.1, A.5.2.8
Pilot line 5.2.8.1
Definition 3.3.8
Discharge outlets
Corrosion protection for 5.3.2, A.5.3.2
Types and locations of 5.2.4, A.5.2.4
Down time 8.6, A.8.6.1, A.8.6.2
Dry-pipe sprinkler systems, closed-head ..... 5.1.1(2), 5.2.2.1
Discharge outlets ..... 5.2.4.1.3, Figs. A.5.2.4.1(c) and (d)
Water supply ..... 5.6.2, A.5.6.2.1, Fig. A.5.6.2.1, A.5.6.2.2, Fig. A.5.6.2.2

-E-

Earthquake protection 5.8
Electrical equipment ..... Chap. 6
Exposure protection 5.2.10, A.1.1
Exterior surfaces
Combustible 4.3, 4.4, 5.2.10
Noncombustible 4.5, 4.6

-F-

Fan decks 5.2.3.1, 5.2.3.2
Discharge outlet location 5.2.4.1.1, 5.2.4.2.1, 5.2.4.3, 5.2.4.4, A.5.2.4.3
Heat detector location 5.2.8.2.1, 5.2.8.2.3
Pilot line detectors ..... 5.2.8.1.2.1(C), 5.2.8.1.3.3
Fans
Drive motor, protection for ..... 5.2.8.1.2.1(D), 5.2.9, 6.3 to 6.5
Inspection 8.3, 8.4
Internal combustion engine-driven ..... Chap. 7
Film fill (definition) 3.3.5
Film-filled towers 5.2.4.5, A.5.2.4.5
Fire protection systems ..... Chap. 5
Combustible exterior surfaces 4.4, 5.2.10
Corrosion protection ..... 5.3, A.5.3.1 to A.5.3.3
Design 5.2, A.5.2
Earthquake protection 5.8
Fan drive motor interlocks 5.2.9.2, 6.4
Hydrants 5.4, A.5.4
Lightning protection 5.7, A.5.7
Maintenance of 8.10
Noncombustible exterior surfaces 4.6
Plans and data 5.1.2
Standpipes 5.5, A.5.5
Types of systems 5.1.1, 5.2.2, A.5.2.2.1, A.5.2.2.2
Water supply 5.6, A.5.6
Fire record, water-cooling towers A.1.1
Fire-resistant partitions 4.9, 5.6.1.2, 5.6.1.3, 5.6.2.1, 5.6.2.2, A.5.6.1.3, A.5.6.2.1, A.5.6.2.2
Definition 3.3.6, A.3.3.6
Fire risk analysis 4.2, A.4.2
Fittings 5.2.5.4, 5.2.5.5, 5.3.1, A.5.3.1
Fixed protection ..... *see* Fire protection systems

-H-

Hangers 5.2.5.6, 5.3.1, A.5.3.1
Heat detectors 5.2.8, 5.2.9.1, A.5.2.8
Hose streams 5.6.3
Housekeeping 8.1
Hydrants 5.4, A.5.4
Hydraulic systems, supervision of 5.2.8.1.4

-I-

Ignition sources 8.2, 8.5
Inspection, mechanical 8.3, 8.4

-L-

Labeled (definition) 3.2.3
Lightning protection 5.7
Listed (definition) 3.2.4, A.3.2.4
Location, of cooling towers ..... Chap. 4
Lockout 8.8

-M-

Maintenance ..... Chap. 8
Manual release valves 5.2.6.2

Copyright National Fire Protection Association
Provided by IHS under license with NFPA
No reproduction or networking permitted without license from IHS
Not for Resale

Mechanical-draft towers ..... Fig. B.1(c)
Definition 3.3.4.3, A.3.3.4.3
Heat detectors 5.2.8.2.1
Inspection 8.3, 8.4
Pilot line detectors ..... 5.2.8.1.2.1(A)
Mechanical inspection 8.3, 8.4

-N-

Natural-draft towers ..... Fig. B.1(b)
Definition 3.3.4.4, A.3.3.4.4
Noncombustible (definition) 3.3.7

-O-

Open areas (spaces) under towers 4.8
Overcurrent protection 6.2, A.6.2

-P-

Partitions, fire-resistant .....*see* Fire-resistant partitions
Pilot line detectors 5.2.8.1
Definition 3.3.8
Pipes ..... 5.2.5, 5.3.1, A.4.2(8), A.5.2.5.1, A.5.2.5.2, A.5.3.1
Pneumatic systems, supervision of 5.2.8.1.4
Preaction systems, closed-head ..... 5.1.1(4), 5.2.2.1
Discharge outlets 5.2.4.1.3
Heat detectors 5.2.8, A.5.2.8
Water supply ..... 5.6.2, A.5.6.2.1, Fig. A.5.6.2.1, A.5.6.2.2, Fig. A.5.6.2.2
Purpose of standard 1.2

-R-

References ..... Chap. 2, Annex C

-S-

Scope of standard 1.1, A.1.1
Screening 4.8
Shall (definition) 3.2.5
Should (definition) 3.2.6
Smoking restrictions 8.2
Sprinkler systems 5.1, 5.2, A.5.2
Antifreeze A.5.1.1
Corrosion protection ..... 5.3, A.5.1.1, A.5.3.1 to A.5.3.3
Minimum rate of water application 5.2.3
Pilot line detectors, use of 5.2.8.1.3.4, 5.2.8.1.3.5
Water supply 5.6, A.5.6
Standpipes 5.5, A.5.5
Strainers 5.2.7, A.5.2.7
Supports, temporary 8.9
Suppression systems .....*see* Fire protection systems
System actuation valves (definition) 3.3.9

-T-

Temporary supports 8.9
Types, cooling tower ..... Annex B

-V-

Valves 5.2.6
System actuation (definition) 3.3.9

-W-

Water spray systems 5.2.8.1.3.5, 5.2.8.1.4
Water supply ..... 4.2(5), 4.2(8), 5.6, A.4.2(8), A.5.6
Welding 8.5
Wet-pipe sprinkler systems ..... 5.1.1(3), 5.2.2.1
Water supply ..... 5.6.2, A.5.6.2.1, Fig. A.5.6.2.1, A.5.6.2.2, Fig. A.5.6.2.2
Wiring ..... Chap. 6

--`,,,```-`-`,,`,,`,`,,`---
Copyright National Fire Protection Association
Provided by IHS under license with NFPA
No reproduction or networking permitted without license from IHS
Not for Resale

Sequence of Events Leading to Publication of an NFPA Committee Document

Call goes out for proposals to amend existing document or for recommendations on new document.

▼

Committee meets to act on proposals, to develop its own proposals, and to prepare its report.

▼

Committee votes on proposals by letter ballot. If two-thirds approve, report goes forward. Lacking two-thirds approval, report returns to committee.

▼

Report — *Report on Proposals* (ROP) — is published for public review and comment.

▼

Committee meets to act on each public comment received.

▼

Committee votes on comments by letter ballot. If two-thirds approve, supplementary report goes forward. Lacking two-thirds approval, supplementary report returns to committee.

▼

Supplementary report — *Report on Comments* (ROC) — is published for public review.

▼

NFPA membership meets (Annual or Fall Meeting) and acts on committee report (ROP or ROC).

▼

Committee votes on any amendments to report approved at NFPA Annual or Fall Meeting.

▼

Appeals to Standards Council on Association action must be filed within 20 days of the NFPA Annual or Fall Meeting.

▼

Standards Council decides, based on all evidence, whether or not to issue standard or to take other action, including upholding any appeals.

Committee Membership Classifications

The following classifications apply to Technical Committee members and represent their principal interest in the activity of the committee.

M *Manufacturer:* A representative of a maker or marketer of a product, assembly, or system, or portion thereof, that is affected by the standard.

U *User:* A representative of an entity that is subject to the provisions of the standard or that voluntarily uses the standard.

I/M *Installer/Maintainer:* A representative of an entity that is in the business of installing or maintaining a product, assembly, or system affected by the standard.

L *Labor:* A labor representative or employee concerned with safety in the workplace.

R/T *Applied Research/Testing Laboratory:* A representative of an independent testing laboratory or independent applied research organization that promulgates and/or enforces standards.

E *Enforcing Authority:* A representative of an agency or an organization that promulgates and/or enforces standards.

I *Insurance:* A representative of an insurance company, broker, agent, bureau, or inspection agency.

C *Consumer:* A person who is, or represents, the ultimate purchaser of a product, system, or service affected by the standard, but who is not included in the *User* classification.

SE *Special Expert:* A person not representing any of the previous classifications, but who has a special expertise in the scope of the standard or portion thereof.

NOTES:

1. "Standard" connotes code, standard, recommended practice, or guide.
2. A representative includes an employee.
3. While these classifications will be used by the Standards Council to achieve a balance for Technical Committees, the Standards Council may determine that new classifications of members or unique interests need representation in order to foster the best possible committee deliberations on any project. In this connection, the Standards Council may make such appointments as it seems appropriate in the public interest, such as the classification of "Utilities" in the National Electrical Code Committee.
4. Representatives of subsidiaries of any group are generally considered to have the same classification as the parent organization.

--`,,`````-`-`,,`,,`,`,,`---

Copyright National Fire Protection Association
Provided by IHS under license with NFPA
No reproduction or networking permitted without license from IHS

Not for Resale

NFPA Technical Committee Document Proposal Form

Note: All proposals must be received by 5:00 p.m. EST/EDST on the published proposal closing date.

For further information on the standards-making process, please contact Codes and Standards Administration at 617-984-7249. For technical assistance, please call NFPA at 617-770-3000.

FOR OFFICE USE ONLY
Log #: _____
Date Rec'd: _____

Please indicate in which format you wish to receive your ROP/ROC: ☐ **CD ROM** ☐ **paper** ☐ **download**
(Note: In choosing the download option you intend to view the ROP/ROC from our Website. No copy will be sent to you.)

Date 12/18/02 **Name** John B. Smith **Telephone** 617-555-1212
Company _____
Address 9 Seattle St. **City** Seattle **State** WA **Zip** 02255
Please indicate organization represented (if any) Fire Marshals Assn. of North America

1. **a) NFPA Document Title** National Fire Alarm Code
   b) NFPA No. & Edition NFPA 72, 2002 ed. **c) Section/Paragraph** 4.4.7.1.1

2. **Proposal Recommends:** *(check one)* ☐ **new text** ☐ **revised text** ☒ **deleted text**

3. **Proposal.** *(Include proposed new or revised wording, or identification of wording to be deleted.)* Note: Proposed text should be in legislative format, that is, use underscore to denote wording to be inserted (inserted wording) and strike-through to denote wording to be deleted (~~deleted wording~~). Delete exception.

4. **Statement of Problem and Substantiation for Proposal.** Note: State the problem that will be resolved by your recommendation. Give the specific reason for your proposal including copies of tests, research papers, fire experience, etc. If more than 200 words, it may be abstracted for publication. A properly installed and maintained system should be free of ground faults. The occurrence of one or more ground faults should be required to cause a "trouble" signal because it indicates a condition that could contribute to future malfunction of the system. Ground fault protection has been widely available on these systems for years and its cost is negligible. Requiring it on all systems will promote better installations, maintenance and reliability.

5. ☒ **This Proposal is Original Material.** Note: Original material is considered to be the submitter's own idea based on or as a result of his/her own experience, thought, or research and, to the best of his/her knowledge, is not copied from another source.

   ☐ **This Proposal is Not Original Material; Its Source** ***(if known)*** **is as Follows:** _____

Sample

I hereby grant the NFPA all and full rights in copyright to this proposal, and I understand that I acquire no rights in any publication of NFPA in which this proposal in this or another similar or analogous form is used.

Signature ***(Required)*** John B. Smith

PLEASE USE SEPARATE FORM FOR EACH PROPOSAL • NFPA FAX (617) 770-3500

Mail to: Secretary, Standards Council • NFPA • 1 Batterymarch Park • PO Box 9101 • Quincy, MA 02269-9101

--`,,`-`-`,,`,,`,`,,`---
Copyright National Fire Protection Association
Provided by IHS under license with NFPA
No reproduction or networking permitted without license from IHS
Not for Resale

NFPA Technical Committee Document Proposal Form

Note: All proposals must be received by 5:00 p.m. EST/EDST on the published proposal closing date.

For further information on the standards-making process, please contact Codes and Standards Administration at 617-984-7249. For technical assistance, please call NFPA at 617-770-3000.

FOR OFFICE USE ONLY
Log #: _____
Date Rec'd: _____

Please indicate in which format you wish to receive your ROP/ROC: ☐ **CD ROM** ☐ **paper** ☐ **download**
(Note: In choosing the download option you intend to view the ROP/ROC from our Website. No copy will be sent to you.)

Date _____ **Name** _____ **Telephone** _____
Company _____
Address _____ **City** _____ **State** _____ **Zip** _____
Please indicate organization represented (if any) _____

1. **a) NFPA Document Title** _____
   b) NFPA No. & Edition _____ **c) Section/Paragraph** _____

2. **Proposal Recommends:** *(check one)* ☐ **new text** ☐ **revised text** ☐ **deleted text**

3. **Proposal.** *(Include proposed new or revised wording, or identification of wording to be deleted.)* Note: Proposed text should be in legislative format, that is, use underscore to denote wording to be inserted (inserted wording) and strike-through to denote wording to be deleted (~~deleted wording~~). _____

4. **Statement of Problem and Substantiation for Proposal.** Note: State the problem that will be resolved by your recommendation. Give the specific reason for your proposal including copies of tests, research papers, fire experience, etc. If more than 200 words, it may be abstracted for publication. _____

5. ☐ **This Proposal is Original Material.** Note: Original material is considered to be the submitter's own idea based on or as a result of his/her own experience, thought, or research and, to the best of his/her knowledge, is not copied from another source.

   ☐ **This Proposal is Not Original Material; Its Source** ***(if known)*** **is as Follows:** _____

I hereby grant the NFPA all and full rights in copyright to this proposal, and I understand that I acquire no rights in any publication of NFPA in which this proposal in this or another similar or analogous form is used.

Signature ***(Required)*** _____

PLEASE USE SEPARATE FORM FOR EACH PROPOSAL • NFPA FAX (617) 770-3500

Mail to: Secretary, Standards Council • NFPA • 1 Batterymarch Park • PO Box 9101 • Quincy, MA 02269-9101

--`,,`,,`-`-`,,`,,`,`,,`---

Copyright National Fire Protection Association
Provided by IHS under license with NFPA
No reproduction or networking permitted without license from IHS

Not for Resale