NFPA 2112

Standard on Flame-Resistant Garments for Protection of Industrial Personnel Against Flash Fire

2007 Edition

NFPA, 1 Batterymarch Park, Quincy, MA 02169-7471
An International Codes and Standards Organization

Copyright National Fire Protection Association
Provided by IHS under license with NFPA
No reproduction or networking permitted without license from IHS

Not for Resale

IMPORTANT NOTICES AND DISCLAIMERS CONCERNING NFPA DOCUMENTS

NOTICE AND DISCLAIMER OF LIABILITY CONCERNING THE USE OF NFPA DOCUMENTS

NFPA codes, standards, recommended practices, and guides, of which the document contained herein is one, are developed through a consensus standards development process approved by the American National Standards Institute. This process brings together volunteers representing varied viewpoints and interests to achieve consensus on fire and other safety issues. While the NFPA administers the process and establishes rules to promote fairness in the development of consensus, it does not independently test, evaluate, or verify the accuracy of any information or the soundness of any judgments contained in its codes and standards.

The NFPA disclaims liability for any personal injury, property or other damages of any nature whatsoever, whether special, indirect, consequential or compensatory, directly or indirectly resulting from the publication, use of, or reliance on this document. The NFPA also makes no guaranty or warranty as to the accuracy or completeness of any information published herein.

In issuing and making this document available, the NFPA is not undertaking to render professional or other services for or on behalf of any person or entity. Nor is the NFPA undertaking to perform any duty owed by any person or entity to someone else. Anyone using this document should rely on his or her own independent judgment or, as appropriate, seek the advice of a competent professional in determining the exercise of reasonable care in any given circumstances.

The NFPA has no power, nor does it undertake, to police or enforce compliance with the contents of this document. Nor does the NFPA list, certify, test or inspect products, designs, or installations for compliance with this document. Any certification or other statement of compliance with the requirements of this document shall not be attributable to the NFPA and is solely the responsibility of the certifier or maker of the statement.

--`,,```,,,,````-`-`,,`,,`,`,,`---
Copyright National Fire Protection Association
Provided by IHS under license with NFPA
No reproduction or networking permitted without license from IHS
Not for Resale

ADDITIONAL NOTICES AND DISCLAIMERS

Updating of NFPA Documents

Users of NFPA codes, standards, recommended practices, and guides should be aware that these documents may be superseded at any time by the issuance of new editions or may be amended from time to time through the issuance of Tentative Interim Amendments. An official NFPA document at any point in time consists of the current edition of the document together with any Tentative Interim Amendments and any Errata then in effect. In order to determine whether a given document is the current edition and whether it has been amended through the issuance of Tentative Interim Amendments or corrected through the issuance of Errata, consult appropriate NFPA publications such as the National Fire Codes® Subscription Service, visit the NFPA website at www.nfpa.org, or contact the NFPA at the address listed below.

Interpretations of NFPA Documents

A statement, written or oral, that is not processed in accordance with Section 6 of the Regulations Governing Committee Projects shall not be considered the official position of NFPA or any of its Committees and shall not be considered to be, nor be relied upon as, a Formal Interpretation.

Patents

The NFPA does not take any position with respect to the validity of any patent rights asserted in connection with any items which are mentioned in or are the subject of NFPA codes, standards, recommended practices, and guides, and the NFPA disclaims liability for the infringement of any patent resulting from the use of or reliance on these documents. Users of these documents are expressly advised that determination of the validity of any such patent rights, and the risk of infringement of such rights, is entirely their own responsibility.

NFPA adheres to applicable policies of the American National Standards Institute with respect to patents. For further information contact the NFPA at the address listed below.

Law and Regulations

Users of these documents should consult applicable federal, state, and local laws and regulations. NFPA does not, by the publication of its codes, standards, recommended practices, and guides, intend to urge action that is not in compliance with applicable laws, and these documents may not be construed as doing so.

Copyrights

This document is copyrighted by the NFPA. It is made available for a wide variety of both public and private uses. These include both use, by reference, in laws and regulations, and use in private self-regulation, standardization, and the promotion of safe practices and methods. By making this document available for use and adoption by public authorities and private users, the NFPA does not waive any rights in copyright to this document.

Use of NFPA documents for regulatory purposes should be accomplished through adoption by reference. The term "adoption by reference" means the citing of title, edition, and publishing information only. Any deletions, additions, and changes desired by the adopting authority should be noted separately in the adopting instrument. In order to assist NFPA in following the uses made of its documents, adopting authorities are requested to notify the NFPA (Attention: Secretary, Standards Council) in writing of such use. For technical assistance and questions concerning adoption of NFPA documents, contact NFPA at the address below.

For Further Information

All questions or other communications relating to NFPA codes, standards, recommended practices, and guides and all requests for information on NFPA procedures governing its codes and standards development process, including information on the procedures for requesting Formal Interpretations, for proposing Tentative Interim Amendments, and for proposing revisions to NFPA documents during regular revision cycles, should be sent to NFPA headquarters, addressed to the attention of the Secretary, Standards Council, NFPA, 1 Batterymarch Park, P.O. Box 9101, Quincy, MA 02269-9101.

For more information about NFPA, visit the NFPA website at www.nfpa.org.

--`,,```,,,,````-`-`,,`,,`,`,,`---

Copyright National Fire Protection Association
Provided by IHS under license with NFPA
No reproduction or networking permitted without license from IHS Not for Resale

Copyright © 2006 National Fire Protection Association. All Rights Reserved.

NFPA 2112

Standard on

Flame-Resistant Garments for Protection of Industrial Personnel Against Flash Fire

2007 Edition

This edition of NFPA 2112, *Standard on Flame-Resistant Garments for Protection of Industrial Personnel Against Flash Fire,* was prepared by the Technical Committee on Flash Fire Protective Garments. It was issued by the Standards Council on July 28, 2006, with an effective date of August 17, 2006, and supersedes all previous editions.

This edition of NFPA 2112 was approved as an American National Standard on August 17, 2006.

Origin and Development of NFPA 2112

The NFPA Standards Council established the Technical Committee on Flash Fire Protective Garments in 1998. Between February and August of 1999, the Technical Committee developed two draft standards: NFPA 2112 and NFPA 2113, *Standard on Selection, Care, Use, and Maintenance of Flame-Resistant Garments for Protection of Industrial Personnel Against Flash Fire,* which were then released for public proposals and comments. NFPA 2112 specifies the minimum design, performance, certification requirements, and test methods for flame-resistant garments for use in areas at risk from flash fires. The first editions of NFPA 2112 and NFPA 2113 were approved by the NFPA membership at the May 2001 NFPA World Fire Safety Congress and were issued by the Standards Council in July 2001.

The 2007 edition revises the scope to clarify that it applies to the performance of fabrics and components of garments and not the garment itself. The scope was also modified to indicate that NFPA 2112 does not apply to single-use or limited-use garments. The Committee is pursuing the development of separate documents to address the design, testing, certification, selection, and use of those garments. This revision also incorporates updates to reference test methods and the method for calculating total heat flux.

Copyright National Fire Protection Association
Provided by IHS under license with NFPA
No reproduction or networking permitted without license from IHS
Not for Resale

Technical Committee on Flash Fire Protective Garments

Max E. Middleton, *Chair*
Eastman Chemical Company, TN [U]

John A. Alderman, RRS Engineering, TX [SE]
William F. Baitinger, Westex, Incorporated, IL [M]
Peter Clark, Performance Apparel Canada, Canada [M]
Rep. Alberta Burn Rehabilitation Society
Steven D. Corrado, Underwriters Laboratories Incorporated, NC [RT]
James Douglas Dale, University of Alberta, Canada [RT]
Allen Duke, Boots & Coots, TX [U]
Patricia A. Gleason, Safety Equipment Institute (SEI), VA [RT]
Michael Jeffrey, Protective Textile Solutions Incorporated, Canada [M]
Misty Johnson, Cintas Corporation, OH [IM]
Laura A. Kinney, Workrite Uniform Company, Incorporated, CA [M]
David H. Loftin, V F Imagewear, Incorporated, TN [M]
Catherine J. Morin, Morin Associates, MD [SE]
Roger F. Parry, The DuPont Company, VA [M]
Michael T. Stanhope, Southern Mills, Incorporated, GA [M]
Jeffrey O. Stull, International Personnel Protection, Incorporated, TX [SE]
James J. Swiss, Swiss Environment & Safety Incorporated, Canada [SE]
Brian Wackowicz, Intertek, NY [RT]
James A. Womble, Avista Corporation, WA [U]

Alternates

Michael J. Armitage, Workrite Uniform Company, Incorporated, CA [M]
(Alt. to L. A. Kinney)
Andy Gbur, Intertek, OH [RT]
(Alt. to B. Wackowicz)
Tommie G. George, Halliburton Company, TX [U]
(Voting Alt. to Halliburton Rep.)
Susan L. Lovasic, The DuPont Company, VA [M]
(Alt. to R. F. Parry)
Joshua D. Moody, Westex, Incorporated, IL [M]
(Alt. to W. F. Baitinger)
Stephen R. Sanders, Safety Equipment Institute (SEI), VA [RT]
(Alt. to P. A. Gleason)

Guy R. Colonna, NFPA Staff Liaison

This list represents the membership at the time the Committee was balloted on the final text of this edition. Since that time, changes in the membership may have occurred. A key to classifications is found at the back of the document.

NOTE: Membership on a committee shall not in and of itself constitute an endorsement of the Association or any document developed by the committee on which the member serves.

Committee Scope: This Committee shall have primary responsibility for documents on the manufacture, selection, care, and use of garments and equipment used for protection of industrial personnel where there is potential for flash fire. Industrial personnel include workers who are potentially or may accidentally be exposed to hydrocarbon or combustible dust flash fires, and not electrical flashes. These documents do not cover fire fighters and other emergency services personnel.

Copyright National Fire Protection Association
Provided by IHS under license with NFPA
No reproduction or networking permitted without license from IHS
Not for Resale

Contents

Chapter 1 Administration **2112–** 4
1.1 Scope **2112–** 4
1.2 Purpose **2112–** 4
1.3 Application **2112–** 4
1.4 Retroactivity **2112–** 4
1.5 Equivalency **2112–** 4
1.6 Units **2112–** 4

Chapter 2 Referenced Publications **2112–** 4
2.1 General **2112–** 4
2.2 NFPA Publications **2112–** 4
2.3 Other Publications **2112–** 4
2.4 References for Extracts in Mandatory Sections **2112–** 5

Chapter 3 Definitions **2112–** 5
3.1 General **2112–** 5
3.2 NFPA Official Definitions **2112–** 5
3.3 General Definitions **2112–** 5

Chapter 4 Certification **2112–** 6
4.1 General **2112–** 6
4.2 Certification Program **2112–** 7
4.3 Inspection and Testing **2112–** 7
4.4 Manufacturer's Quality Assurance Program **2112–** 8

Chapter 5 Labeling and Information **2112–** 8
5.1 Product Label Requirements **2112–** 8
5.2 User Information **2112–** 9

Chapter 6 Design Requirements **2112–** 9
6.1 Hardware Finishes **2112–** 9
6.2 Metal Components **2112–** 9

Chapter 7 Performance Requirements **2112–** 9
7.1 Fabric Requirements **2112–** 9
7.2 Thread Requirements **2112–** 9
7.3 Hardware Requirement **2112–** 9
7.4 Label Requirement **2112–**10

Chapter 8 Test Methods **2112–**10
8.1 Sample Preparation Procedures **2112–**10
8.2 Thermal Protective Performance (TPP) Test **2112–**11
8.3 Flame Resistance Test **2112–**15
8.4 Heat and Thermal Shrinkage Resistance Test **2112–**16
8.5 Manikin Test **2112–**17
8.6 Thread Heat Resistance Test **2112–**18
8.7 Label Print Durability Test **2112–**18

Annex A Explanatory Material **2112–**18

Annex B Properties for Evaluating Flame-Resistant Garments **2112–**20

Annex C Informational References **2112–**24

Index **2112–**25

Copyright National Fire Protection Association
Provided by IHS under license with NFPA
No reproduction or networking permitted without license from IHS
Not for Resale

NFPA 2112

Standard on

Flame-Resistant Garments for Protection of Industrial Personnel Against Flash Fire

2007 Edition

IMPORTANT NOTE: This NFPA document is made available for use subject to important notices and legal disclaimers. These notices and disclaimers appear in all publications containing this document and may be found under the heading "Important Notices and Disclaimers Concerning NFPA Documents." They can also be obtained on request from NFPA or viewed at www.nfpa.org/disclaimers.

NOTICE: An asterisk (*) following the number or letter designating a paragraph indicates that explanatory material on the paragraph can be found in Annex A.

Changes other than editorial are indicated by a vertical rule beside the paragraph, table, or figure in which the change occurred. These rules are included as an aid to the user in identifying changes from the previous edition. Where one or more complete paragraphs have been deleted, the deletion is indicated by a bullet (•) between the paragraphs that remain.

A reference in brackets [ ] following a section or paragraph indicates material that has been extracted from another NFPA document. As an aid to the user, the complete title and edition of the source documents for extracts in mandatory sections of the document are given in Chapter 2 and those for extracts in informational sections are given in Annex C. Editorial changes to extracted material consist of revising references to an appropriate division in this document or the inclusion of the document number with the division number when the reference is to the original document. Requests for interpretations or revisions of extracted text shall be sent to the technical committee responsible for the source document.

Information on referenced publications can be found in Chapter 2 and Annex C.

Chapter 1 Administration

1.1 Scope. The standard shall specify the minimum performance requirements and test methods for flame-resistant fabrics and components and the design and certification requirements for garments for use in areas at risk from flash fires.

1.2 Purpose.

1.2.1* This standard shall provide minimum requirements for the design, construction, evaluation, and certification of flame-resistant garments for use by industrial personnel, with the intent of not contributing to the burn injury of the wearer, providing a degree of protection to the wearer, and reducing the severity of burn injuries resulting from accidental exposure to hydrocarbon flash fires.

1.2.2* Controlled laboratory tests used to determine compliance with the performance requirements of this standard shall not be deemed as establishing performance levels for all situations to which personnel can be exposed.

1.2.3* This standard shall not be intended to be utilized as a detailed manufacturing or purchasing specification but shall be intended to be referenced in purchase specifications as minimum requirements.

1.3 Application.

1.3.1 This standard shall apply to the design, manufacturing, and certification of new flame-resistant garments.

1.3.2* This standard shall not apply to protective clothing for wildland fire fighting, technical rescue, structural fire fighting, proximity fire fighting, or any other fire-fighting operations or hazardous materials emergencies. This standard shall not apply to single-use or limited-use garments. This standard shall not apply to protection from electrical flashes, radiological agents, biological agents, or hazardous materials.

1.3.3 Certification of flame-resistant garments to the requirements of this standard shall not preclude certification to additional appropriate standards where the garment meets all the applicable requirements of each standard.

1.3.4 The requirements of this standard shall not apply to accessories that might be attached to flame-resistant garments unless specifically addressed herein.

1.3.5 The minimum requirements identified in this standard are not intended to meet all the protection needs of a user in areas at risk from flash fires. Users shall refer to NFPA 2113, *Standard on Selection, Care, Use, and Maintenance of Flame-Resistant Garments for Protection of Industrial Personnel Against Flash Fire*, for conducting the appropriate hazard assessment to identify the in-use area's minimum protection requirements.

1.4 Retroactivity. This standard shall only apply to garments manufactured on or after the effective date of the standard.

1.5 Equivalency. Nothing herein shall restrict any jurisdiction or manufacturer from exceeding these minimum requirements.

1.6 Units. In this standard, values for measurement are followed by an equivalent in parentheses, but only the first stated value shall be regarded as the requirement. Equivalent values in parentheses shall not be considered as the requirement, as these values might be approximate.

Chapter 2 Referenced Publications

2.1 General. The documents or portions thereof listed in this chapter are referenced within this standard and shall be considered part of the requirements of this document.

2.2 NFPA Publications. National Fire Protection Association, 1 Batterymarch Park, Quincy, MA 02169-7471.

NFPA 2113, *Standard on Selection, Care, Use, and Maintenance of Flame-Resistant Garments for Protection of Industrial Personnel Against Flash Fire,* 2007 edition.

2.3 Other Publications.

2.3.1 AATCC Publications. American Association of Textile Chemists and Colorists, P.O. Box 12215, Research Triangle Park, NC 27709.

AATCC 135, *Dimensional Changes in Automatic Home Laundering of Woven and Knit Fabrics*, 2003.

AATCC 158, *Dimensional Changes in Dry-Cleaning in Perchloroethylene: Machine Method*, 2000.

Copyright National Fire Protection Association
Provided by IHS under license with NFPA
No reproduction or networking permitted without license from IHS
Not for Resale

2.3.2 ASTM Publications. ASTM International, 100 Barr Harbor Drive, P.O. Box C700, West Conshohocken, PA 19428-2959.

ASTM D 6413, *Test Method for Flame Resistance of Textiles (Vertical Test),* 1999.

ASTM F 1930, *Test Method for Evaluation of Flame Resistant Clothing for Protection Against Flash Fire Simulations Using an Instrumented Manikin,* 2000.

2.3.3 GSA Publications. U.S. General Services Administration, 1800 F Street, N.W., Washington, DC 20405.

Federal Test Method Standard 191A, *Textile Test Methods,* July 20, 1978.

2.3.4 ISO Publications. International Organization for Standardization, 1, rue de Varembé, Case postale 56, CH-1211 Geneve 20, Switzerland.

ISO 17025, *General Requirements for the Competence of Testing and Calibration Laboratories,* 2005.

ISO/IEC Guide 65, *General Requirements for Bodies Operating Product Certification Systems*, 1996.

ISO 9001, *Quality Management Systems — Requirements,* 2000.

2.3.5 Other Publications.

Merriam-Webster's Collegiate Dictionary, 11th edition, Merriam-Webster, Inc., Springfield, MA, 2003.

Stoll, A. M. and M. A. Chianta, "Heat Transfer through Fabrics as Related to Thermal Injury," *Transactions-New York Academy of Sciences*, Vol. 33(7), Nov. 1971, pp. 649–670.

Stoll, A. M. and M. A. Chianta, "Method and Rating System for Evaluations of Thermal Protection," *Aerospace Medicine*, Vol. 40, 1969, pp. 1232–1238.

2.4 References for Extracts in Mandatory Sections.

NFPA 270, *Standard Test Method for Measurement of Smoke Obscuration Using a Conical Radiant Source in a Single Closed Chamber,* 2002 edition.

NFPA 921, *Guide for Fire and Explosion Investigations,* 2004 edition.

NFPA 1914, *Standard for Testing Fire Department Aerial Devices,* 2002 edition.

NFPA 1971, *Standard on Protective Ensembles for Structural Fire Fighting and Proximity Fire Fighting,* 2007 edition.

NFPA 1975, *Standard on Station/Work Uniforms for Fire and Emergency Services,* 2004 edition.

NFPA 1977, *Standard on Protective Clothing and Equipment for Wildland Fire Fighting,* 2005 edition.

NFPA 1983, *Standard on Life Safety Rope and Equipment for Emergency Services,* 2006 edition.

NFPA 1991, *Standard on Vapor-Protective Ensembles for Hazardous Materials Emergencies,* 2005 edition.

Chapter 3 Definitions

3.1 General. The definitions contained in this chapter shall apply to the terms used in this standard. Where terms are not defined in this chapter or within another chapter, they shall be defined using their ordinarily accepted meanings within the context in which they are used. *Merriam-Webster's Collegiate Dictionary*, 11th edition, shall be the source for the ordinarily accepted meaning.

3.2 NFPA Official Definitions.

3.2.1* Approved. Acceptable to the authority having jurisdiction.

3.2.2* Authority Having Jurisdiction. An organization, office, or individual responsible for enforcing the requirements of a code or standard, or for approving equipment, materials, an installation, or a procedure.

3.2.3 Labeled. Equipment or materials to which has been attached a label, symbol, or other identifying mark of an organization that is acceptable to the authority having jurisdiction and concerned with product evaluation, that maintains periodic inspection of production of labeled equipment or materials, and by whose labeling the manufacturer indicates compliance with appropriate standards or performance in a specified manner.

3.2.4* Listed. Equipment, materials, or services included in a list published by an organization that is acceptable to the authority having jurisdiction and concerned with evaluation of products or services, that maintains periodic inspection of production of listed equipment or materials or periodic evaluation of services, and whose listing states that either the equipment, material, or service meets appropriate designated standards or has been tested and found suitable for a specified purpose.

3.2.5 Shall. Indicates a mandatory requirement.

3.2.6 Should. Indicates a recommendation or that which is advised but not required.

3.2.7 Standard. A document, the main text of which contains only mandatory provisions using the word "shall" to indicate requirements and which is in a form generally suitable for mandatory reference by another standard or code or for adoption into law. Nonmandatory provisions shall be located in an appendix or annex, footnote, or fine-print note and are not to be considered a part of the requirements of a standard.

3.3 General Definitions.

3.3.1 Accreditation/Accredited. A system whereby a certification organization determines that a laboratory has demonstrated the ability to conduct tests in an accurate and precise manner consistent with the requirements of this standard, accepts the laboratory's test data, and continues to monitor laboratory practices to ensure accurate and precise testing consistent with the requirements of this standard.

3.3.2 Agents.

3.3.2.1 ***Biological Agents.*** Biological materials that are capable of causing an acute disease or long-term damage to the human body. [**1991,** 2005]

3.3.2.2 ***Radiological Agents.*** Radiation associated with x-rays, alpha, beta, and gamma emissions from radioactive isotopes, or other materials in excess of normal background radiation levels. [**1991,** 2005]

3.3.3 Body.

3.3.3.1 ***Lower Body.*** The area of the body below the waist including the legs but excluding the ankles and feet.

3.3.3.2 ***Upper Body.*** The area of body above the waist and extending to the shoulder, including the arms and wrists but excluding the hands.

3.3.4 Certification/Certified. A system whereby a certification organization determines that a manufacturer has demonstrated the ability to produce a product that complies with the

Copyright National Fire Protection Association
Provided by IHS under license with NFPA
No reproduction or networking permitted without license from IHS
Not for Resale

requirements of this standard, authorizes the manufacturer to use a label on listed products that comply with the requirements of this standard, and establishes a follow-up program conducted by the certification organization as a check on the methods the manufacturer uses to determine continued compliance with the requirements of this standard. [**1971,** 2007]

3.3.5 Certification Organization. An independent, third-party organization that determines product compliance with the requirements of this standard with a labeling/listing/follow-up program. [**1971,** 2007]

3.3.6 Compliance/Compliant. Meeting or exceeding all applicable requirements of this standard. [**1971,** 2007]

3.3.7 Component. Any material, part, or subassembly used in the construction of the protective ensemble or any element of the protective ensemble. [**1971,** 2007]

3.3.8 Drip. A flow of liquid that lacks sufficient quantity or pressure to form a continuous stream. [**1914,** 2002]

3.3.9 Emblem(s). Shields, heraldry, or printing that designates a governmental entity or a specific organization; rank, title, position, or other professional status that is painted, screened, embroidered, sewn, glued, bonded, or otherwise attached in a permanent manner.

3.3.10 Fabric. The one or more layers of textile material(s) used in the primary construction of protective garments.

3.3.10.1 ***Textile Fabric.*** A planar structure consisting of yarns or fibers. [**1977,** 2005]

3.3.11* Flame Resistance. The property of a material whereby combustion is prevented, terminated, or inhibited following the application of a flaming or nonflaming source of ignition, with or without subsequent removal of the ignition source.

3.3.12* Flash Fire. A fire that spreads rapidly through a diffuse fuel, such as dust, gas, or the vapors of an ignitible liquid, without the production of damaging pressure. [**921,** 2004]

3.3.13 Follow-Up Program. The sampling, inspections, tests, or other measures conducted by the certification organization on a periodic basis to determine the continued compliance of labeled and listed products that are being produced by the manufacturer to the requirements of this standard. [**1977,** 2005]

3.3.14 Garments. Clothing including, but not limited to, coveralls, trousers, shirts, outerwear, and rainwear.

3.3.14.1 ***Limited-Use Garment.*** A garment whose service life is limited by the manufacturer to a specified number of wear cycles and does not meet the testing requirements of this standard.

3.3.14.2* ***Single-Use Garment.*** A garment that is designed to be used one time and then disposed of.

3.3.15 Hardware. Nonfabric components of the protective garment including, but not limited to, those made of metal or plastic.

3.3.16 Hazardous Material. Any solid, liquid, gas, or mixture thereof that can potentially cause harm to the human body through respiration, ingestion, skin absorption, or contact.

3.3.17 Hazardous Materials Emergencies. Incidents involving the release or potential release of hazardous chemicals into the environment that can cause loss of life, personnel injury, or damage to property and the environment. [**1971,** 2007]

3.3.18 Industrial Personnel. Workers who might be exposed to flash fire.

3.3.19 Interlining. Any textile that is intended for incorporation into any article of wearing apparel as a layer between outer and inner layers. [**1975,** 2004]

3.3.20 Lining. Any material that is attached and used to cover or partially cover the inside surface of a flame-resistant garment.

3.3.21 Melt. A response to heat by a material resulting in evidence of flowing or dripping. [**1983,** 2006]

3.3.22 Model. The collective term used to identify a group of individual elements of the same basic design and components from a single manufacturer produced by the same manufacturing and quality assurance procedures that are covered by the same certification. [**1971,** 2007]

3.3.23 Product. The compliant flame-resistant garment.

3.3.24* Product Label. A label or marking affixed to a product by the manufacturer that provides general information, warnings, instructions for care and maintenance, and other information. [**1971,** 2007]

3.3.25 Reflective Striping. Material added to the exterior of the garment to enhance nighttime or daytime visibility.

3.3.26 Reinforcement. An additional layer of a textile material applied to a specific area of the protective garment to make that portion of the protective garment more resistant to wear.

3.3.27 Sample. An amount of the material, product, or assembly to be tested that is representative of the item as a whole. [**270,** 2002]

3.3.28 Seam. Any permanent attachment of two or more protective garment fabrics in a line formed by joining the separate material pieces.

3.3.28.1 ***Sewn Seam.*** A series of stitches joining two or more separate plies of material(s) of planar structure, such as textiles. [**1975,** 2004]

3.3.29 Separate. A material response evidenced by splitting or delaminating. [**1971,** 2007]

3.3.30 Specimen. The item that undergoes testing; in some cases, the specimen is also the sample. [**1971,** 2007]

3.3.31 Trouser. A garment that is designed to provide minimum protection to the lower torso and legs, excluding the ankles and feet.

Chapter 4 Certification

4.1 General.

4.1.1 All flame-resistant garments that are labeled as being compliant with this standard shall meet or exceed all applicable requirements specified in this standard and shall be certified.

4.1.2 All test data used to determine compliance of flame-resistant garments with this standard shall be provided by an accredited testing laboratory.

4.1.3 All flame-resistant garments shall be labeled and listed.

4.1.4 All flame-resistant garments shall have a product label, which shall meet the requirements of Section 5.1.

--`,,```,,,,````-`-`,,`,,`,`,,`---

Copyright National Fire Protection Association
Provided by IHS under license with NFPA
No reproduction or networking permitted without license from IHS

Not for Resale

4.1.5* The certification organization's label, symbol, or identifying mark shall be attached to the product label, be part of the product label, or be immediately adjacent to the product label.

4.1.6 Manufacturers shall not claim compliance with a portion(s) or segment(s) of the requirements of this standard and shall not use the name or identification of this standard, NFPA 2112, in any statements about their respective product(s) unless the product(s) is certified as compliant to this standard.

4.1.7 The certification organization shall not certify any flame-resistant garments to the 2001 edition of this standard on or after 1 August 2007.

4.1.8 The certification organization shall not permit any manufacturer to label any flame-resistant garments as compliant with the 2001 edition of this standard on or after 1 August 2007.

4.2 Certification Program.

4.2.1* The certification organization shall not be owned or controlled by manufacturers or vendors of the product being certified.

4.2.2 The certification organization shall be primarily engaged in certification work and shall not have a monetary interest in the product's ultimate profitability.

4.2.3 The certification organization shall be accredited for personal protective equipment in accordance with ISO/IEC Guide 65, *General Requirements for Bodies Operating Product Certification Systems.*

4.2.4 The certification organization shall refuse to certify products to this standard that do not comply with all applicable requirements of this standard.

4.2.5* The contractual provisions between the certification organization and the manufacturer shall specify that certification is contingent on compliance with all applicable requirements of this standard.

4.2.5.1 There shall be no conditional, temporary, or partial certifications.

4.2.5.2 Manufacturers shall not be authorized to use any label or reference to the certification organization on products that are not manufactured in compliance with all applicable requirements of this standard.

4.2.6 The certification organization shall have a program to accredit laboratories to perform the tests required by this standard.

4.2.6.1 The accredited laboratory shall conduct the required tests and maintain documentation of test results.

4.2.6.2 The accredited laboratory shall have laboratory facilities and equipment available for conducting required tests.

4.2.7 A program for calibration of all instruments shall be in place and operating, and procedures shall be in use to ensure proper control of all testing.

4.2.8 In the absence of an accredited laboratory, the certification organization shall be permitted to have its own laboratory facilities and equipment available for conducting required tests.

4.2.9* The certification organization shall require the manufacturer to establish and maintain a program of production inspection and testing that meets the requirements of Section 4.4.

4.2.9.1 The certification organization shall ensure that the audit assurance program provides continued product compliance with this standard.

4.2.9.2 The certification organization shall permit the manufacturer to be registered to ISO 9001, *Quality Management Systems — Requirements,* in lieu of meeting the requirements of Section 4.4.

4.2.10 The certification organization and the manufacturer shall evaluate any changes affecting the form, fit, or function of the certified product to determine its continued certification to this standard.

4.2.11* The certification organization shall have a follow-up inspection program of the manufacturing facilities of the certified product, with a minimum of one visit per 12-month period.

4.2.12 As part of the follow-up inspection program, the certification organization shall review the manufacturer's records and sample product to ensure the following:

(1) Garments conform with the requirements of this standard
(2) The manufacturer has documentation that the fabric and components used in the garment were tested by an accredited laboratory and comply with this standard
(3) A manufacturing quality assurance plan meeting the requirements of this standard is in place

4.2.13 The certification organization shall also have a follow-up inspection program of the accredited testing laboratory(ies).

4.2.13.1 The certification organization shall conduct a minimum of one visit per 12-month period.

4.2.13.2 The certification organization shall review the accredited laboratory's records and facilities to ensure required documentation is maintained and to ensure conformance with testing requirements.

4.2.14 The certification organization shall have a program for investigating field reports alleging malperformance or failure of listed products.

4.2.15* The certification organization shall require the manufacturer to have a product recall system as part of the manufacturer's quality assurance program.

4.2.16 The certification organization's operating procedures shall provide a mechanism for the manufacturer to appeal decisions, which shall include the presentation of information from both sides of a controversy to a designated appeals panel.

4.2.17 The certification organization shall be in a position to use legal means to protect the integrity of its name and label, which shall be registered and legally defended.

4.3 Inspection and Testing.

4.3.1 For the certification of flame-resistant garments, the certification organization shall conduct inspections of the manufacturing facility and the accredited laboratory, as specified in 4.3.2 through 4.3.9.

4.3.2 All inspections, evaluations, conditioning, and testing for certification or for recertification shall be conducted by the certification organization or a facility accredited for inspections, evaluations, conditioning, and testing in accordance with all requirements pertaining to testing laboratories in ISO 17025, *General Requirements for the Competence of Testing and Calibration Laboratories.*

Copyright National Fire Protection Association
Provided by IHS under license with NFPA
No reproduction or networking permitted without license from IHS
Not for Resale

4.3.3 All inspections, evaluations, conditioning, or testing conducted by a product manufacturer shall not be used in the certification or recertification process unless the facility for inspections, evaluations, conditioning, or testing has been accredited in accordance with all requirements pertaining to testing laboratories in ISO 17025, *General Requirements for the Competence of Testing and Calibration Laboratories*.

4.3.4 Inspection by the certification organization shall include a review of all product labels to ensure that all required label attachment, compliance statements, certification statements, and other product information are as specified for the specific item in Section 5.1.

4.3.5 Inspection by the certification organization shall include a review of any graphic representations used on product labels, as permitted in 5.1.6 to ensure that the systems are consistent with the worded statements, are readily understood, and clearly communicate the intended message.

4.3.6 Inspection by the certification organization shall include a review of the user information required by Section 5.2 to ensure that the information has been developed and is available.

4.3.7 Inspection by the certification organization for determining compliance with the design requirements specified in Chapter 6 shall be performed on whole or complete products.

4.3.8 Testing conducted by the accredited laboratory in accordance with the testing requirements of Chapter 8, for determining product compliance with the applicable requirements specified in Chapter 7, shall be performed on samples representative of materials and components used in the actual construction of the flame-resistant garment or sample materials cut from a representative product.

4.3.9 Recertification.

4.3.9.1 Any change in the design, construction, or material of a compliant product shall require new inspection and testing to verify compliance with all applicable requirements of this standard that the certification organization determines can be affected by such change.

4.3.9.2 Recertification shall be conducted before labeling the modified products as being compliant with this standard.

4.3.10 Product Modifications.

4.3.10.1 The certification organization shall not permit any modifications, pretreatment, conditioning, or other such special processes of the product or any product component prior to the product's submission for evaluation and testing by the accredited laboratory.

4.3.10.2 The accredited laboratory shall accept, from the manufacturer for evaluation and testing for certification, only product or product components that are the same in every respect to the actual final product or product component.

4.3.10.3 The accredited laboratory shall not permit the substitution, repair, or modification, other than as specifically permitted herein, of any product or any product component during testing.

4.4 Manufacturer's Quality Assurance Program.

4.4.1 General.

4.4.1.1 The manufacturer shall provide and maintain a quality assurance program that includes a documented inspection and product recall system.

4.4.1.2 The manufacturer shall have an inspection system to substantiate conformance to this standard.

4.4.1.3* The manufacturer shall be permitted to be registered to ISO 9001, *Quality Management Systems — Requirements,* in lieu of meeting the requirements of 4.4.2 through 4.4.8.

4.4.2 Instructions.

4.4.2.1 The manufacturer shall maintain written inspection and testing instructions.

4.4.2.2 The instructions shall prescribe inspection and test of materials, work in process, and completed articles.

4.4.2.3 Criteria for acceptance and rejection of materials, processes, and final product shall be part of the instructions.

4.4.3 Records.

4.4.3.1 The manufacturer shall maintain records of all "pass" and "fail" tests.

4.4.3.2 Records shall indicate the disposition of the failed materials or products.

4.4.4 Inspection System. The manufacturer's inspection system shall provide for procedures that assure the latest applicable drawings, specifications, and instructions are used for fabrication, inspection, and testing.

4.4.5 Calibration Program.

4.4.5.1 The manufacturer shall maintain, as part of the quality assurance program, a calibration program of all instruments used to ensure proper control of testing.

4.4.5.2 The calibration program shall be documented as to the date of calibration and performance verification.

4.4.6 Inspection Status. The manufacturer shall maintain a system for identifying the inspection status of component materials, work in process, and finished goods.

4.4.7 Nonconforming Materials.

4.4.7.1 The manufacturer shall establish and maintain a system for controlling nonconforming material, including procedures for the identification, segregation, and disposition of rejected material.

4.4.7.2 All nonconforming materials or products shall be identified to prevent use, shipment, and intermingling with conforming materials or products.

4.4.8 Third-Party Audit. The manufacturer's quality assurance program shall be audited by the third-party certification organization to determine that the program ensures continued product compliance with this standard.

Chapter 5 Labeling and Information

5.1 Product Label Requirements.

5.1.1* All flame-resistant garments shall have a product label or labels permanently and conspicuously attached to each flame-resistant garment.

5.1.2 At least one product label shall be conspicuously located inside each flame-resistant garment when the item is properly assembled with all layers and components in place.

Copyright National Fire Protection Association
Provided by IHS under license with NFPA
No reproduction or networking permitted without license from IHS
Not for Resale

5.1.3 Multiple label pieces shall be permitted in order to carry all statements and information required to be on the product label.

5.1.4* The certification organization's label, symbol, or identifying mark shall be permanently attached to the product label or shall be part of the product label.

5.1.5 All worded portions of the required product label shall be printed in English. Supplementary languages, in addition to English, shall be permitted.

5.1.6 Symbols and other pictorial graphic representations shall be permitted to be used to supplement worded statements on the product label or labels.

5.1.7 Graphic representations shall be consistent to clearly communicate the intended message.

5.1.8 The following statement shall be printed legibly on the product label in letters at least 2.5 mm (0.10 in.) high:

THIS FLAME-RESISTANT GARMENT MEETS
THE REQUIREMENTS OF NFPA 2112,
STANDARD ON FLAME-RESISTANT GARMENTS
FOR PROTECTION OF INDUSTRIAL PERSONNEL
AGAINST FLASH FIRE, 2007 EDITION.

5.1.9 The following information shall also be printed legibly on the product label in letters at least 1.6 mm (0.063 in.) high:

(1) Model name, number, or design
(2) Manufacturer's name, identification, or designation
(3) Manufacturer's address
(4) Country of manufacture
(5) Manufacturer's garment identification number, lot number, or serial number
(6) Size
(7) Fiber content
(8) "DO NOT REMOVE"

5.1.10 The product label shall also include the international symbol for "Read user instructions before use," as shown in Figure 5.1.10.

5.1.11 The manufacturer shall be permitted to exclude the international symbol for "Read user instructions before use," as described in 5.1.10, when all of the information specified in 5.2.1 is provided on the product label or other labels adjacent to the product label.

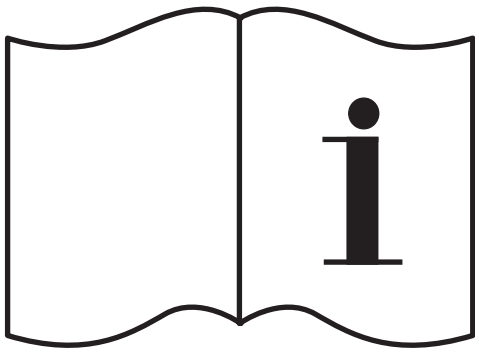

FIGURE 5.1.10 "Read User Instructions Before Use" Symbol.

5.2 User Information.

5.2.1* The flame-resistant garment manufacturer shall provide information including, but not limited to, warnings, information, and instructions with each flame-resistant garment.

5.2.2* Manufacturers shall provide a sizing chart that indicates the range of key wearer measurements that are accommodated by each specific size of garment offered.

Chapter 6 Design Requirements

6.1 Hardware Finishes. All flame-resistant hardware finishes shall be free of rough spots, burrs, or sharp edges.

6.2 Metal Components. Any metallic closure systems or metal components of the flame-resistant garments shall not come in direct contact with the body.

Chapter 7 Performance Requirements

7.1 Fabric Requirements.

7.1.1 Fabric utilized in the construction of flame-resistant garments shall be tested for thermal protective performance (TPP) as specified in Section 8.2, and shall have a "spaced" TPP rating of not less than 25 J/cm^2 (6.0 cal/cm^2) and a "contact" TPP rating of not less than 12.6 J/cm^2 (3.0 cal/cm^2).

7.1.2 Fabric and reflective striping utilized in the construction of flame-resistant garments shall be tested for flame resistance as specified in Section 8.3, and shall have a char length of not more than 100 mm (4 in.) and an afterflame of not more than 2 seconds, and shall not melt and drip.

7.1.3 Fabric utilized in the construction of flame-resistant garments, excluding manufacturers' labels, shall be individually tested for thermal shrinkage resistance as specified in Section 8.4, and shall not shrink more than 10 percent in any direction.

7.1.4 Fabric, other textile materials, and reflective striping, other than those items described in 7.1.4.1 and 7.1.4.2, used in the construction of flame-resistant garments shall be individually tested for heat resistance in their original form as specified in Section 8.4, and shall not melt and drip, separate, or ignite.

7.1.4.1 Labels and emblems shall not be required to be tested for heat resistance.

7.1.4.2 Interlinings, collar stays, elastics, closures, and hook and pile fasteners, when not in direct contact with the skin, shall not be required to be tested for heat resistance.

7.1.5 Specimen garments shall be tested for overall flash fire exposure as specified in Section 8.5 as a qualification test for the material and shall have an average predicted body burn rating of not more than 50.

7.2 Thread Requirements. Specimens of all sewing thread utilized in the construction of flame-resistant garments, excluding embroidery, shall be made of an inherently flame-resistant fiber, shall be tested for heat resistance as specified in Section 8.6, and shall not melt.

7.3 Hardware Requirement. Specimens of hardware used in the construction of flame-resistant garments, including but not limited to buttons, fasteners, and closures, shall be individually

Copyright National Fire Protection Association
Provided by IHS under license with NFPA
No reproduction or networking permitted without license from IHS
Not for Resale

tested for heat resistance in their original form as specified in Section 8.4; shall not melt and drip, separate, or ignite; and shall remain functional.

7.4 Label Requirement. Specimen labels used in the construction of flame-resistant garments shall be tested for printing durability as specified in Section 8.7 and shall remain legible.

Chapter 8 Test Methods

8.1 Sample Preparation Procedures.

8.1.1 Application.

8.1.1.1 The sample preparation procedures contained in Section 8.1 shall apply to each test method in Chapter 8, as specifically referenced in the sample preparation section of each test method.

8.1.1.2 Only the specific sample preparation procedure or procedures referenced in the sample preparation section of each test method shall be applied to that test method.

8.1.2 Room Temperature Conditioning Procedure.

8.1.2.1 Specimens shall be conditioned at a temperature of 21°C ± 3°C (70°F ± 5°F) and a relative humidity of 65 percent ± 5 percent for at least 4 hours.

8.1.2.2 Specimens shall be tested within 5 minutes of removal from conditioning.

8.1.3* Washing and Drying Procedure. Where required, specimens shall be subjected to the specified number of cycles of washing and drying in accordance with the following procedure:

(1) Each washing procedure shall be as specified in Table 8.1.3.
(2) No bleach or softener shall be used during any portion of the laundry cycle.
(3) The machine shall be filled with water to the specified level prior to adding chemicals.
(4) The water level shall be determined by measuring inside the washing machine from the bottommost portion of the basket to the water surface.
(5) The water level measurement shall be 12.7 cm (5.0 in.) for the low setting and 25.4 cm (10 in.) for the high setting.
(6) Water hardness shall not exceed 25 ppm.
(7) The extraction cycle shall continue as specified in Table 8.1.3 or until water is no longer flowing to the drain.
(8) The load shall be removed immediately after the extraction cycle concludes.
(9) A full load of 9 kg (20 lb) shall be laundered.
(10) Fabric samples for washing shall be at least 1 m^2 (1 yd^2) of each material.
(11) A dummy load, if needed to make a full load, shall be of similar material as the test material.
(12) The machine type shall be a front-loading, 16 kg (35 lb) capacity, industrial washer capable of performing the operations specified in Table 8.1.3.
(13) Sample specimens shall be tumble dried.

Table 8.1.3 Washing Cycle Procedure

Operations	Time (min)	Temperature °C	Temperature °F	Water Level	Quantity per Wash Load g	Quantity per Wash Load oz
Break	10	66	150	Low		
Sodium metasilicate (or equivalent)					17	0.6
Sodium tripolyphosphate					11	0.4
Tergitol 15.S.9 or equivalent					22	0.8
Drain	1					
Carry-over	5	66	150	Low		
Drain	1					
Rinse	2	57	135	High		
Drain	1					
Rinse	2	48	118	High		
Drain	1					
Rinse	2	38	100	High		
Drain	1					
Sour	5	38	100	Low		
Sodium silicofluoride					6	0.2
Drain	1					
Extract	5					

Copyright National Fire Protection Association
Provided by IHS under license with NFPA
No reproduction or networking permitted without license from IHS
Not for Resale

(14) The dryer temperature shall be preset to provide a dryer exhaust temperature of 68°C ± 3°C (155°F ± 5°F) without a load.
(15) Wash water temperature shall be within ±3°C (±5°F) of the value in Table 8.1.3.

8.1.4 Dry Cleaning Procedure.

8.1.4.1 Where required, specimens shall be subjected to the required number of cycles of dry cleaning in accordance with the procedures of Sections 9.2 and 9.3 of AATCC 158, *Dimensional Changes in Dry-Cleaning in Perchloroethylene: Machine Method.*

8.1.4.2 Fabric samples for dry cleaning shall be at least 1 m^2 (1 yd^2) of each material.

8.2 Thermal Protective Performance (TPP) Test.

8.2.1 Application. This test method shall apply to flame-resistant garment fabrics.

8.2.2 Specimens.

8.2.2.1 TPP testing shall be conducted on three specimens measuring 150 mm ± 5 mm × 150 mm ± 5 mm (6 in. ± ¼ in. × 6 in. ± ¼ in.) and shall consist of all layers representative of the garment to be tested.

8.2.2.2 Specimens shall consist of all layers used in the construction of the flame-resistant garment, excluding any areas with special reinforcements.

8.2.2.3 Specimens shall not include seams.

8.2.2.4 Specimens shall not be stitched to hold individual layers together.

8.2.3 Sample Preparation.

8.2.3.1 For fabrics that are designated on the flame-resistant garment label to be washed, specimens shall be tested before and after three cycles of washing and drying as specified in 8.1.3.

8.2.3.2 For fabrics that are designated on the flame-resistant garment label to be dry-cleaned, specimens shall be tested before and after three cycles of dry cleaning as specified in 8.1.4.

8.2.3.3 For fabrics that are designated on the flame-resistant garment label to be either washed or dry-cleaned, specimens shall be tested before and after three cycles of washing and drying as specified in 8.1.3, or after three cycles of dry cleaning as specified in 8.1.4.

8.2.4 Apparatus.

8.2.4.1 The test apparatus shall consist of a specimen holder assembly, specimen holder assembly support, thermal flux source, protective shutter, sensor assembly, recorder, and spacer and shall also have a gas supply, gas rotameter, burners, and sensor.

8.2.4.1.1 The specimen holder assembly shall consist of upper and lower mounting plates meeting the following, as shown in Figure 8.2.4.1.1:

(1) Specimen holder mounting plates shall be 203 mm ± 1.6 mm × 203 mm ± 1.6 mm, × 6.5 mm ± 0.8 mm (8 in. ± 0.063 in. × 8 in. ± 0.063 in., × 0.25 in. ± 0.0313 in.).
(2) The lower specimen mounting plate shall have centered a 102 mm ± 1.6 mm × 102 mm ± 1.6 mm (4 in. ± 0.063 in. × 4 in. ± 0.063 in.) hole.

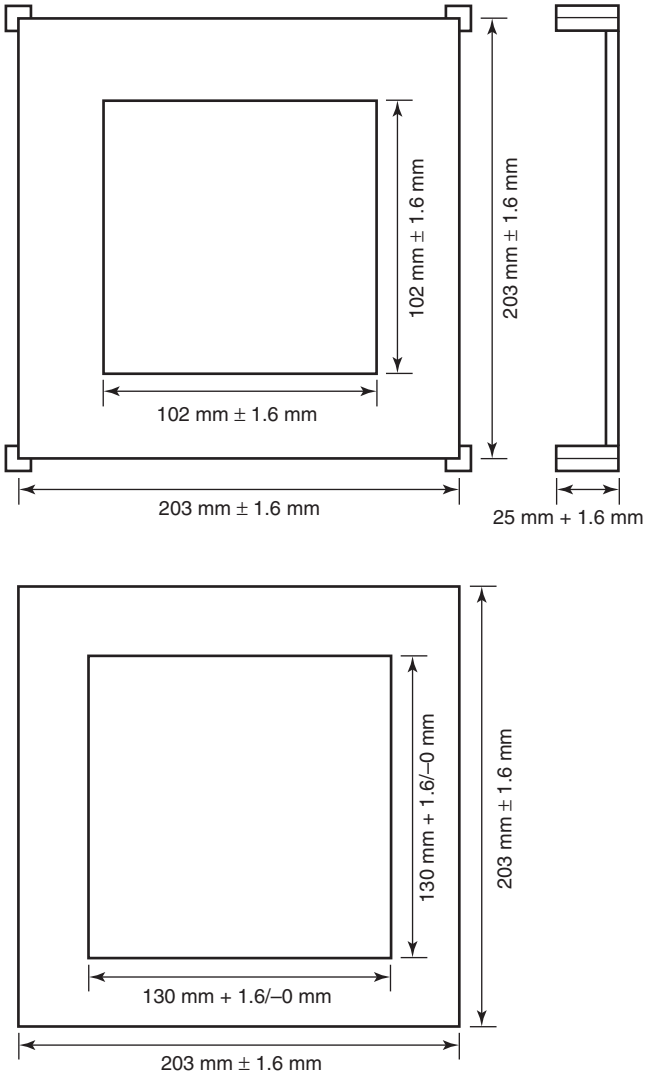

FIGURE 8.2.4.1.1 Lower Specimen Mounting Plate.

(3) The upper specimen mounting plate shall have centered a 130 mm × 130 mm +1.6 mm (5.13 in. × 5.13 in. +0.063 in.) hole.
(4) The lower specimen mounting plate shall have a 25 mm, +1.6 mm high, × 3.2 mm, +0.8 mm thick (1.0 in., +0.063 in. high, × 0.13 in., +0.0313 in. thick) steel post welded to each corner 6.5 mm, +1.6 mm (0.25 in., +0.063 in.) from each side and perpendicular to the plane of the plate, or some other method for aligning the specimen shall be provided.
(5) The upper sample mounting plate shall have a corresponding hole in each corner so that the upper specimen mounting plate fits over the lower specimen mounting plate.

8.2.4.1.2 The specimen holder assembly support shall consist of a steel frame that rigidly holds and positions in a reproducible manner the specimen holder assembly and specimen relative to the thermal flux.

8.2.4.1.3 The thermal flux source shall consist of a convective thermal flux source and a radiant thermal flux source.

Copyright National Fire Protection Association
Provided by IHS under license with NFPA
No reproduction or networking permitted without license from IHS
Not for Resale

8.2.4.1.4 The convective thermal flux source shall consist of two Meker or Fisher burners affixed beneath the specimen holder assembly opening and subtended at a nominal 45-degree angle from the vertical so that the flames converge at a point immediately beneath the specimen.

8.2.4.1.5 The radiant thermal flux source shall consist of nine quartz T-150 infrared tubes affixed beneath and centered between the burners as shown in Figure 8.2.4.1.5.

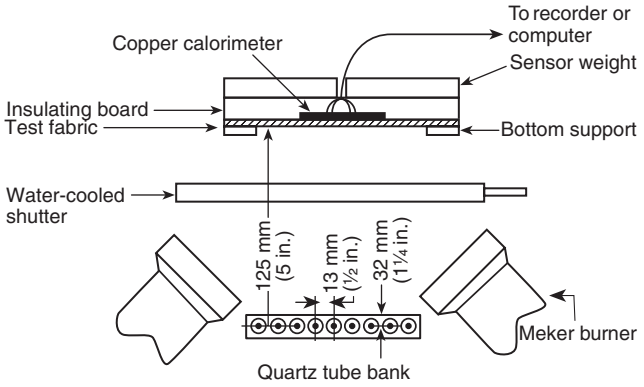

Note: When used, the spacer is positioned between the material specimen and the sensor assembly.

FIGURE 8.2.4.1.5 Specifications for TPP Tester Thermal Flux Source.

8.2.4.1.6 A protective shutter capable of completely dissipating thermal load from the thermal flux source during the time periods before and after specimen exposure shall be placed between the thermal flux source and the specimen.

8.2.4.1.7 The sensor assembly shall be fitted into the opening in the top plate of the specimen holder and be in contact with the surface of the inner liner normally facing the wearer.

8.2.4.1.8 The sensor assembly shall consist of a 133 mm × 133 mm × 13 mm (5.25 in. × 5.25 in. × 0.5 in.) heat-resistant block that fits without binding into the hole in the upper specimen mounting plate and shall be uniformly weighted such that the complete sensor assembly, including the copper calorimeter, weighs 1000 g ± 10 g (2.2 lb ± 0.022 lb).

8.2.4.1.9 The sensor data acquisition system shall be able to record temperatures to at least 150°C (302°F). The temperature acquisition system shall have at least a resolution of 0.1°C (32.2°F) and an accuracy of ± 0.75°C (33.4°F).

8.2.4.1.10 The automated data acquisition system shall have a data acquisition speed of at least 10 Hz and provide a cold-junction compensation for the measurement of thermocouple response.

8.2.4.1.11 The gas supply shall be propane, methane, or natural gas, shall be provided with reducer and valving arrangements to control the gas supply pressure at 56 kPa (8 psi ± 0.1 psi), and shall be capable of providing flow equivalent to 2 L/min (0.07 ft^3/min) of air at standard conditions.

8.2.4.1.12 The gas rotameter shall be any gas rotameter with a range to give flow equivalent to 2 L/min (0.07 ft^3/min) of air at standard conditions.

8.2.4.1.13 The burners shall be Meker or Fisher burners having 38 mm (1.5 in.) diameter tops and orifice sizes of 1.3 mm (0.05 in.).

8.2.4.1.14 The sensor shall be a copper calorimeter mounted in an insulating block.

8.2.4.1.15 The calorimeter shall conform to the specifications provided in Figure 8.2.4.1.15.

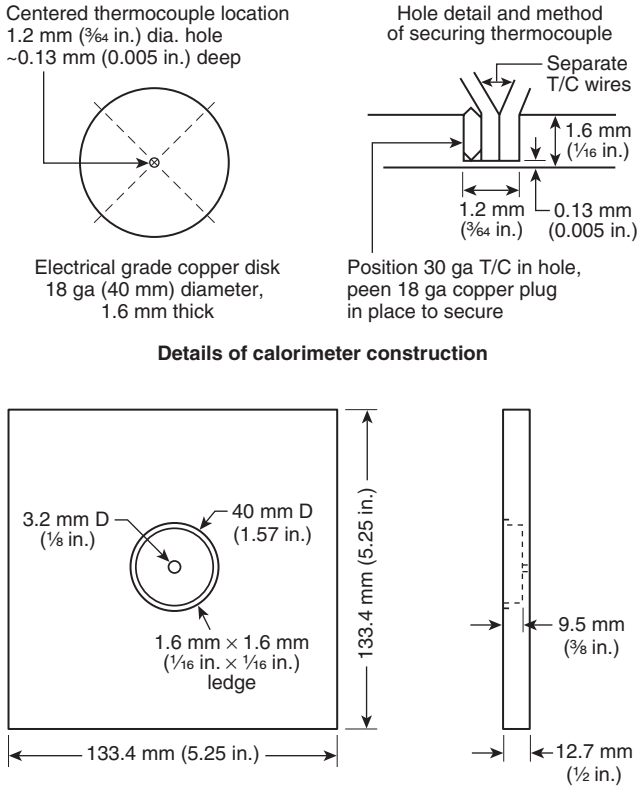

Connect 1 T/C into center of disk. Bring T/C lead out of center hole of support. Secure sensor into support with three or four sewing pins cut to 9.5 mm (⅜ in.) long.

Note: The mass of the copper disk is 18.0 g (± 0.1 g) before drilling.

FIGURE 8.2.4.1.15 Sensor Assembly.

8.2.4.1.16 The surface of the sensor shall be coated with a flat black paint having an emissivity of 0.9 or greater.

8.2.4.1.17 The spacer shall be constructed of either steel or aluminum and shall conform to the specifications provided in Figure 8.2.4.1.17.

8.2.4.2 A radiometer complying with 8.2.4.2.1 and 8.2.4.2.2 shall be used in the calibration of the test apparatus.

8.2.4.2.1 The radiometer shall be a Gardon-type radiation transducer with a diameter of 25 mm (1 in.) and a heat flux operating range from 0 to 60 kW/m^2 (0 to 5 Btu/ft^2·sec).

8.2.4.2.2 The radiometer shall be water cooled, and the cooling water temperature shall be above the ambient dew point temperature.

Copyright National Fire Protection Association
Provided by IHS under license with NFPA
No reproduction or networking permitted without license from IHS
Not for Resale

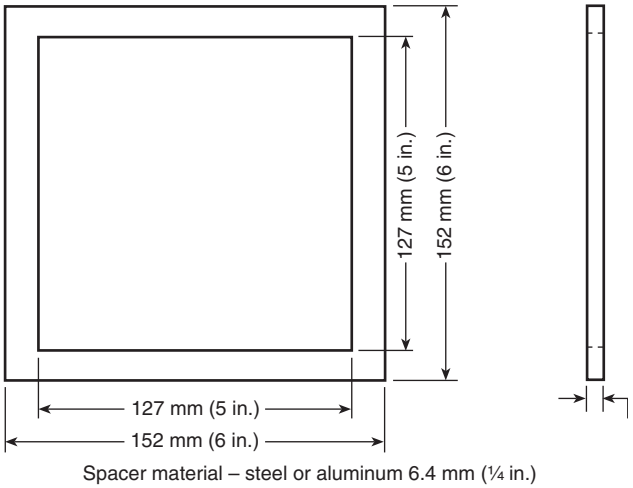

FIGURE 8.2.4.1.17 Spacer for TPP Test.

8.2.5 Procedure.

8.2.5.1 General Procedures.

8.2.5.1.1 All testing and calibration shall be performed in a hood or ventilated area to carry away combustion products, smoke, or fumes.

8.2.5.1.2 If air currents disturb the flame, the apparatus shall be shielded.

8.2.5.1.3 Procedures for testing and calibration shall be performed using the same hood and ventilation conditions.

8.2.5.1.4 Care shall be exercised in handling the burner with open flame.

8.2.5.1.4.1 Adequate separation shall be maintained between flame and combustible materials.

8.2.5.1.4.2 Because the specimen holder and sensor assembly become heated during prolonged testing, protective gloves shall be used when handling these hot objects.

8.2.5.1.4.3 Because some test specimens become hazardous when exposed to direct flame, care shall be used when the specimen ignites or releases combustible gases.

8.2.5.1.4.4 If specimens ignite, the gas supply at the cylinder shall be shut off and the flame shall be allowed to burn the gas.

8.2.5.2 Calibration Procedure.

8.2.5.2.1 Specimens shall be exposed to a thermal flux of 83 kW/m^2 ± 4 kW/m^2 (2.0 cal/cm^2·sec ± 0.1 cal/cm^2·sec) as measured with the copper calorimeter.

8.2.5.2.1.1 The copper calorimeter shall be the only heat sensor used in setting the total 83 kW/m^2 (2 cal/cm^2·sec) exposure condition.

8.2.5.2.1.2 The total heat flux shall be calculated from the time-dependent temperature values obtained from the thermocouple embedded in the copper disk, the exposed surface area and mass of the copper disk, and the temperature-dependent heat capacity of copper.

(A) The time-dependent temperature values shall be determined from the reference Type J thermocouple by applying a cold-junction compensation to the measured EMF (to account for parasitic thermocouple effects at the connection point of the thermocouple leads and measuring instrument) and by application of the NIST polynomial coefficients for the measured voltage-to-temperature conversion (linearization).

(B) The exposed surface area of the copper disk shall be 12.57 cm^2 (± 0.07 cm^2) and its mass, before drilling the thermocouple hole, shall be 18.0 g (± 0.1 g).

(C) The heat capacity in J/g°C of the copper slug calorimeter at a specific temperature shall be calculated using the following equation:

$$C_p = 4.1868 \frac{\left(A + B \times t + C \times t^2 + D \times t^3 + E / t^2\right)}{63.546 \text{ g/mol}}$$

where:

C_p = heat capacity (J/g°C)
t = (measured temperature °C + 273.15)/1000
A = 4.237312
B = 6.715751
C = −7.46962
D = 3.339491
E = 0.016398

(D) The total heat flux shall be determined using the following equation:

$$\text{Heat flux, } I = \frac{M \times \bar{C}_p \times \left(Temp_{final} - Temp_{initial}\right)}{A \times \varepsilon \times \left(time_{final} - time_{initial}\right)}$$

where:

I = incident heat flux (W/cm^2)
M = mass of copper slug (g)
$\bar{C}_p$ = (C_p @ $Temp_{initial}$ + C_p @ $Temp_{final}$)/2 (J/g°C)
A = area of the copper disk (cm^2)
ε = emissivity of the black paint used on the calorimeter front surface (0.9 or greater)
$Temp_{initial}$ = initial measurement temperature (°C)
$Temp_{final}$ = final measurement temperature (°C)
$time_{initial}$ = time at initial temperature measurement (sec)
$time_{final}$ = time at final temperature measurement (sec)

8.2.5.2.1.3 Other heat-sensing devices shall not be used to reference or adjust the total heat flux read by the copper calorimeter.

8.2.5.2.2 The total heat flux and the 50 percent/50 percent ± 5 percent radiant/convective balance of the energy sources shall be set in accordance with the procedures in 8.2.5.2.3 through 8.2.5.2.7 and shall be determined using a radiometer, and the level of the total heat flux shall be determined by using a calibration copper calorimeter designated and used only to set the total exposure level.

8.2.5.2.3 Once an initial setting of 13 kW/m^2 ± 4 kW/m^2 (0.3 cal/cm^2·sec ± 0.1 cal/cm^2·sec) has been made to the array of new quartz lamps, the operating voltage shall be recorded and permanently retained for test purposes.

8.2.5.2.4 During all future calibration procedures, the voltage setting of the quartz lamps shall be compared to the current voltage setting of the new quartz lamps, and if the voltage increase is 5 V or greater from the initial setting, the lamps shall be replaced.

Copyright National Fire Protection Association
Provided by IHS under license with NFPA
No reproduction or networking permitted without license from IHS
Not for Resale

8.2.5.2.5* The two Meker or Fisher burners shall be initially adjusted so that the flames converge upon each other just below the center of the radiometer, and the color of the flame shall primarily be blue.

8.2.5.2.6 The radiant thermal flux source of nine quartz infrared tubes alone shall be set to an incoming radiant heat flux of 13 kW/m^2 ± 4 kW/m^2 (0.3 cal/cm^2·sec ± 0.1 cal/cm^2·sec) using a commercial radiometer meeting the specifications of 8.2.4.2.

8.2.5.2.6.1 The radiometer window shall be positioned at the geometric center of the sample holder and at the same plane as a test specimen.

8.2.5.2.6.2 The radiometer shall be mounted in a holder of the same overall size, shape, and material as the one used for the copper calorimeter to ensure similar heat and flame patterns across the faces of the radiometer and calorimeters.

8.2.5.2.6.3 The radiant quartz tubes shall be turned on and "run" for a minimum of 2 minutes prior to measuring the radiant heat flux.

8.2.5.2.7 The total heat flux shall be set at 83 kW/m^2 ± 4 kW/m^2 (2.0 cal/cm^2·sec ± 0.1 cal/cm^2·sec) using the calibration copper calorimeter, defined in 8.2.4.1.14 through 8.2.4.1.17, by adjusting only the gas supply to the Meker or Fisher burners.

8.2.5.2.7.1 Without a mounted specimen, the calibration copper calorimeter shall be placed on top of the specimen holder, with the blackened copper calorimeter facing down, and then exposed directly to the flame of the burner.

8.2.5.2.7.2 The response of the calorimeter shall be recorded for at least 10 seconds.

8.2.5.2.7.3 The lowest temperature point on the curve where the response is linear shall be chosen, and the increase in sensor temperature for 10 seconds of heating shall also be determined.

8.2.5.2.7.4 The initial reading from the 10-second reading shall be subtracted to obtain the increase.

8.2.5.2.7.5 The response shall be calculated using the procedure identified in 8.2.5.2.1.2. Calibration shall be achieved when the exposure heat flux result is 83 kW/m^2 + 2 kW/m^2 (2.0 cal/cm^2 · sec + 0.05 cal/cm^2 · sec).

8.2.5.3 Test Procedure.

8.2.5.3.1 After the total thermal heat flux has been set at 83 kW/m^2 ± 4 kW/m^2 (2.0 cal/cm^2·sec ± 0.1 cal/cm^2·sec) using the calibration procedure in 8.2.5.2, the testing copper calorimeter shall be used to measure the total heat flux.

8.2.5.3.2 Prior to testing, the testing copper calorimeter shall be used to measure the total heat flux by placing the calorimeter facing down and then exposing it directly to the total heat source.

8.2.5.3.3 The response of the calorimeter shall be recorded for at least 10 seconds.

8.2.5.3.4 The lowest temperature point on the curve where the response is linear shall be chosen, and the increase in sensor temperature for 10 seconds of heating shall be determined.

8.2.5.3.5 The initial reading from the 10-second reading shall be subtracted to obtain the increase.

8.2.5.3.6 The response shall be 148°C ± 3.7°C (267°F ± 6.7°F) for an exposure heat flux of 83 kW/m^2 +2 kW/m^2 (2.0 cal/cm^2·sec +0.05 cal/cm^2·sec).

8.2.5.3.7 If the measurement from the testing copper calorimeter is within +4 kW/m^2 (+0.1 cal/cm^2·sec), the test shall be complete.

8.2.5.3.8 If the measurement from the testing copper calorimeter does not agree within +4 kW/m^2 (+0.1 cal/cm^2·sec) of the measurement of the calibration calorimeter, the testing copper calorimeter shall be repaired, reconditioned, or replaced to achieve agreement.

8.2.5.3.9 Specimens shall be mounted by first placing the surface of the material to be used as the outside of the garment face down on the mounting plate.

8.2.5.3.9.1 The subsequent layers shall then be placed on top in the order used in the garment, with the surface to be worn toward the skin facing up.

8.2.5.3.9.2 With the protective shutter engaged, the specimens shall be placed on the specimen holder.

8.2.5.3.9.3 The spacer shall then be placed over the fabric or fabric assembly.

8.2.5.3.10* The testing copper calorimeter shall be placed directly on top of the spacer.

8.2.5.3.11 The protective shutter shall be retracted, and the data acquisition system started.

8.2.5.3.11.1 The start time of the exposure shall be recorded as the time $t = 0$ seconds value for the test.

8.2.5.3.11.2 The exposure shall be continued for 30 seconds (exposure time $t = 30$ seconds).

8.2.5.3.11.3 The protective shutter shall be engaged (closed), the data acquisition system shall be stopped, the calorimeter shall be removed and cooled, and then the specimen holder and exposed specimen shall be removed.

8.2.5.3.12 After each exposure, the calorimeter shall be cooled with a jet of air or by contact with a cold surface to 33°C ± 1°C (91°F ± 1.8°F) before the next heat flux determination.

8.2.5.3.13 The sensor face shall be wiped immediately after each run, while hot, to remove any decomposition products that condense and serve as a source of error.

8.2.5.3.13.1 If a deposit collects and appears to be thicker than a thin layer of paint, or is irregular, the sensor surface shall be reconditioned.

8.2.5.3.13.2 The cooled sensor shall be carefully cleaned with acetone or a petroleum solvent, making certain there is no ignition source in the area.

8.2.5.3.13.3 If copper is showing on the testing copper calorimeter, the surface shall be completely repainted with a thin layer of flat black spray paint.

8.2.5.3.13.4* At least one calibration run shall be performed comparing the testing copper calorimeter with the calibration copper calorimeter.

8.2.5.3.13.5 If the testing calorimeter is in error by more than +4 kW/m^2 (+0.1 cal/cm^2·sec), all electrical connections and points where thermocouples are secured to the testing calorimeter shall be checked.

Copyright National Fire Protection Association
Provided by IHS under license with NFPA
No reproduction or networking permitted without license from IHS
Not for Resale

8.2.5.3.13.6 Two more calibration runs shall be conducted by comparing the testing copper calorimeter with the calibration-grade copper calorimeter.

8.2.5.3.13.7 The average error shall be calculated.

8.2.5.3.13.8 If the average error of the testing calorimeter is more than +4 kW/m^2 (+0.1 cal/cm^2·sec), then the testing calorimeter shall be either repaired and recalibrated or replaced.

8.2.5.3.14* A second set of tests shall be conducted; however, the spacer described in 8.2.5.3.9.3 and 8.2.5.3.10 shall not be used.

8.2.5.4 Preparation of Human Tissue Burn Tolerance.

8.2.5.4.1 For each TPP test ("spaced" and "contact" testing), the thermal end point shall be determined from a comparison of a plot of the sensor-measured cumulative thermal energy versus exposure time to the Stoll response curve, a model for the prediction of a second-degree burn in human tissue, expressed in J/cm^2 via:

$$\text{Stoll response, J/cm}^2 = 5.0204 \times t_i^{0.2901}$$

where:
t_i = the time value in seconds of the copper calorimeter measurement

8.2.5.4.2 The sensor cumulative response (thermal energy) at each time step shall be determined using the following equation:

$$\text{Cumulative thermal energy, } Q = \frac{mass \times \bar{C}_p \times (Temp_t - Temp_{t=0})}{area} \text{ J/cm}^2$$

where:
$Temp_t$ = the measured sensor temperature at time step t
$Temp_{t=0}$ = the starting temperature of the sensor at the beginning of the exposure
$\bar{C}_p$ = as determined in 8.2.5.2.1.2

8.2.5.5 Determination of Test Results.

8.2.5.5.1* The time to the second-degree burn shall be determined from the intersection of the plots of the cumulative sensor response versus exposure time (as determined from 8.2.5.4.2) and the Stoll response versus exposure time (as determined from the equation in 8.2.5.4.1).

8.2.5.5.1.1 The time value of this intersection (the second-degree burn prediction) shall be determined to the nearest 0.1 second and recorded as the time to burn.

8.2.5.5.1.2 If the sensor response curve and the Stoll response curve do not intersect, the test result shall be recorded as "no burn."

8.2.5.5.2 The TPP rating for each test shall be calculated as the product of exposure energy heat flux and time to burn, using the following equation:

$$\text{TPP rating} = (F)(t)$$

where:
F = exposure heat flux (cal/cm^2·sec)
t = time to burn (sec)

8.2.5.5.3 The individual average TPP rating for both "spaced" and "contact" tests shall also be calculated.

8.2.6 Report.

8.2.6.1 The individual test TPP rating of each specimen shall be reported separately for both "spaced" and "contact" tests.

8.2.6.2 The individual average TPP ratings for both "spaced" and "contact" tests shall also be reported.

8.2.6.3 If a TPP rating is greater than 60, then the TPP rating shall be reported as ">60."

8.2.7 Interpretation.

8.2.7.1 Pass or fail determinations shall be separately based on the individual average TPP ratings for both "spaced" and "contact" tests.

8.2.7.2 If an individual result from any test set varies more than ±10 percent from the average result, the results from the test set shall be discarded and another set of specimens shall be tested.

8.3 Flame Resistance Test.

8.3.1 Application.

8.3.1.1 This test method shall apply to each flame-resistant garment fabric layer.

8.3.1.2 Modifications to this test method for testing woven textile materials shall be as specified in 8.3.8.

8.3.1.3 Modifications to this test method for testing knit textile materials shall be as specified in 8.3.9.

8.3.1.4 Modifications to this test method for testing nonwoven textile materials shall be as specified in 8.3.10.

8.3.1.5 Modifications to this test method for testing small specimens not meeting the specimen size requirements of 8.3.2 shall be as specified in 8.3.11.

8.3.1.6 Modifications to this test method for testing reflective striping shall be as specified in 8.3.12.

8.3.2 Specimens.

8.3.2.1 Each specimen shall consist of a 76 mm × 305 mm (3 in. × 12 in.) rectangle with the long dimension parallel to either the warp or filling, the wale or course, or machine or cross-machine direction of the material.

8.3.2.2 Each individual layer of multilayer material systems or composites shall be separately tested.

8.3.3 Sample Preparation.

8.3.3.1 For fabrics that are designated on the flame-resistant garment label to be washed, specimens shall be tested before and after 100 cycles of washing and drying as specified in 8.1.3.

8.3.3.2 For fabrics that are designated on the flame-resistant garment label to be dry-cleaned, specimens shall be tested before and after 100 cycles of dry cleaning as specified in 8.1.4.

8.3.3.3 For fabrics that are designated on the flame-resistant garment label to be either washed or dry-cleaned, specimens shall be tested before and after 100 cycles of washing and drying as specified in 8.1.3, or after 100 cycles of dry cleaning as specified in 8.1.4.

Copyright National Fire Protection Association
Provided by IHS under license with NFPA
No reproduction or networking permitted without license from IHS
Not for Resale

8.3.4 Apparatus. The test apparatus shall be that specified in ASTM D 6413, *Test Method for Flame Resistance of Textiles (Vertical Test).*

8.3.5 Procedure.

8.3.5.1 Flame resistance testing shall be performed in accordance with ASTM D 6413, *Test Method for Flame Resistance of Textiles (Vertical Test).*

8.3.5.2 Each specimen shall be examined for evidence of melting and dripping.

8.3.6 Report.

8.3.6.1 After-flame time and char length shall be reported for each specimen.

8.3.6.2 The average after-flame time and char length for each material shall be calculated and reported.

8.3.6.3 The after-flame time shall be reported to the nearest 0.2 second, and the char length to the nearest 3.2 mm (⅛ in.).

8.3.6.4 Observations of melting and dripping for each specimen shall be reported.

8.3.7 Interpretation.

8.3.7.1 Pass/fail performance shall be based on any observed melting and dripping, the average after-flame time, and average char length.

8.3.7.2 Failure in either direction shall constitute failure of the material.

8.3.8 Specific Requirements for Testing Woven Textile Materials.

8.3.8.1 Five specimens from each of the warp and filling directions shall be tested.

8.3.8.2 No two warp specimens shall contain the same warp yarns, and no two filling specimens shall contain the same filling yarns.

8.3.8.3 Testing shall be performed as described in 8.3.2 through 8.3.7.

8.3.9 Specific Requirements for Testing Knit Textile Materials.

8.3.9.1 Five specimens from each of the two directions shall be tested.

8.3.9.2 Samples for conditioning shall include material that is a minimum of 76 mm × 305 mm (3 in. × 12 in.).

8.3.9.3 Testing shall be performed as described in 8.3.2 through 8.3.7.

8.3.10 Specific Requirements for Testing Nonwoven Textile Materials.

8.3.10.1 Five specimens from each of the machine and cross-machine directions shall be tested.

8.3.10.2 Testing shall be performed as described in 8.3.2 through 8.3.7.

8.3.11 Specific Requirements for Testing Small Materials.

8.3.11.1 Five specimens attached to the textile layer as used in the protective garment shall be tested.

8.3.11.2 The specimens shall be attached to the textile layer such that the bottom (exposure) edge of the item coincides with the bottom (exposure) edge of the textile support layer.

8.3.11.3 Testing shall be performed as described in 8.3.2 through 8.3.7, except char length shall not be measured.

8.3.12 Specific Requirements for Testing Reflective Striping.

8.3.12.1 Five reflective striping specimens for flammability testing shall be prepared by attaching the reflective striping to 76 mm × 305 mm (3 in. × 12 in.) pieces of fabric utilized in the construction of the garment, in the manner that it is normally attached to the fabric.

8.3.12.2 The reflective striping shall be oriented parallel to the long axis and in the center of the fabric.

8.3.12.3 Testing shall be performed as described in 8.3.2 through 8.3.7, except char length shall not be measured.

8.4 Heat and Thermal Shrinkage Resistance Test.

8.4.1 Application. The heat and thermal shrinkage resistance test method shall apply to flame-resistant garment fabrics, components, and hardware.

8.4.2 Specimens.

8.4.2.1 Only heat resistance testing shall be conducted on not fewer than three specimens for each hardware item, label material, and other flame-resistant garment fabrics not listed in 8.4.2.2 and 8.4.2.3.

8.4.2.2 Both heat and thermal shrinkage resistance testing shall be conducted on a minimum of three specimens for each flame-resistant garment fabric.

8.4.2.3 Each separable layer of multilayer material systems or composites shall be tested as an individual layer.

8.4.3 Sample Preparation.

8.4.3.1 For fabrics that are designated on the flame-resistant garment label to be washed, specimens shall be tested before and after three cycles of washing and drying as specified in 8.1.3.

8.4.3.2 For fabrics that are designated on the flame-resistant garment label to be dry-cleaned, specimens shall be tested before and after three cycles of dry cleaning as specified in 8.1.4.

8.4.3.3 For fabrics that are designated on the flame-resistant garment label to be either washed or dry-cleaned, specimens shall be tested before and after three cycles of washing and drying as specified in 8.1.3, or after three cycles of dry cleaning as specified in 8.1.4.

8.4.4 Apparatus.

8.4.4.1 The test oven shall be a horizontal flow circulating oven with minimum interior dimensions to permit the specimens to be suspended and be not less than 51 mm (2 in.) from any interior oven surface or other test specimens.

8.4.4.2 The test oven shall have an airflow rate of 38 m/min to 76 m/min (125 ft/min to 250 ft/min) at the standard temperature and pressure of 21°C (70°F) at 1 atm, measured at the center point of the oven.

8.4.4.3 A test thermocouple shall be positioned so that it is level with the horizontal centerline of a mounted sample specimen.

8.4.4.3.1 The thermocouple shall be equidistant between the vertical centerline of a mounted specimen placed in the middle of the oven and the oven wall where the airflow enters the test chamber.

8.4.4.3.2 The thermocouple shall be an exposed bead, Type J or Type K, No. 30 AWG thermocouple.

Copyright National Fire Protection Association
Provided by IHS under license with NFPA
No reproduction or networking permitted without license from IHS
Not for Resale

8.4.4.3.3 The test oven shall be heated and the test thermocouple stabilized at 260°C +6/–0°C (500°F +10/–0°F) for a period of not less than 30 minutes.

8.4.5 Procedure.

8.4.5.1 Specimen marking and measurements shall be in accordance with the procedure specified in AATCC 135, *Dimensional Changes in Automatic Home Laundering of Woven and Knit Fabrics.*

8.4.5.2 The specimen shall be suspended by metal hooks at the top and centered in the oven so that the entire specimen is not less than 51 mm (2 in.) from any oven surface or other specimen and airflow is parallel to the plane of the material.

8.4.5.3 The oven door shall not remain open more than 15 seconds.

8.4.5.3.1 The air circulation shall be shut off while the door is open and turned on when the door is closed.

8.4.5.3.2 The total oven recovery time after the door is closed shall not exceed 30 seconds.

8.4.5.4 The specimen, mounted as specified, shall be exposed in the test oven for 5 minutes +0.15/–0 minutes.

8.4.5.5 The test exposure time shall begin when the test thermocouple recovers to a temperature of 260°C +6/–0°C (500°F +10/–0°F).

8.4.5.6 Immediately after the exposure specified in 8.4.5.4, the specimen shall be removed and examined for evidence of ignition, melting and dripping, or separation.

8.4.5.7 Determination of "pass" or "fail" shall be made within 5 minutes of removal from the oven.

8.4.5.8 Knit fabric shall be pulled to original dimensions and shall be allowed to relax for 1 minute prior to measurement to determine "pass" or "fail."

8.4.6 Report.

8.4.6.1 Observations of ignition, melting and dripping, or separation shall be reported for each specimen.

8.4.6.2 The percent change in the width and length dimensions of each specimen shall be calculated, and the results shall be reported as the average of all three specimens in each dimension.

8.4.7 Interpretation.

8.4.7.1 Any evidence of ignition, melting and dripping, or separation on any specimen shall constitute failing performance.

8.4.7.2 The average percent change in both dimensions shall be used to determine pass/fail performance.

8.4.7.3 Failure in any one dimension shall constitute failure for the entire sample.

8.4.8 Specific Requirements for Testing Flame-Resistant Garment Textile Materials.

8.4.8.1 Each specimen shall be 381 mm ± 13 mm × 381 mm ± 13 mm (15 in. ± 0.5 in. × 15 in. ± 0.5 in.) and shall be cut from the fabric to be utilized in the construction of the clothing item.

8.4.8.2 Testing shall be performed in accordance with 8.4.2 through 8.4.7.

8.4.9 Specific Requirements for Testing Other Flame-Resistant Garment Materials (Including Reflective Striping).

8.4.9.1 Specimen length shall be 152 mm (6 in.), except for textiles utilized in the clothing item in lengths less than 152 mm (6 in.), where lengths shall be the same as utilized in the clothing item.

8.4.9.2 Specimen width shall be 152 mm (6 in.), except for textiles or reflective striping utilized in the clothing item in widths less than 152 mm (6 in.), where widths shall be the same as utilized in the clothing item.

8.4.9.3 Samples for conditioning shall include material sewn onto a 0.84 m^2 (1 yd^2), of navy 200 g/m^2 (6.0 oz/yd^2), 100 percent aramid material no closer than 51 mm (2 in.) apart in parallel strips.

8.4.9.3.1 Specimens, except reflective striping, shall be removed from the ballast material prior to testing.

8.4.9.3.2 Specimens shall be placed in the oven with the long dimension of the specimen parallel to the oven sides.

8.4.9.3.3 Reflective striping specimens shall be placed in the oven with the striping parallel to the oven sides.

8.4.9.4 Testing shall be performed in accordance with 8.4.2 through 8.4.7, and thermal shrinkage shall not be measured.

8.4.10 Specific Requirements for Testing Hardware.

8.4.10.1 A minimum of three complete hardware items shall be tested.

8.4.10.2 Hardware shall not be conditioned.

8.4.10.3 Observations of hardware condition following heat exposure shall be limited to ignition.

8.4.10.4 Hardware shall be evaluated for functionality within 10 minutes following removal from the oven.

8.4.10.5 Testing shall be performed in accordance with 8.4.2 through 8.4.7, and thermal shrinkage shall not be measured.

8.5 Manikin Test.

8.5.1 Application. The manikin test shall apply to flame-resistant garment fabrics.

8.5.2 Specimens.

8.5.2.1 Three specimens shall be tested.

8.5.2.2 Fabrics to be tested shall be used to construct the standard garment design specified in 8.3.2 of ASTM F 1930, *Test Method for Evaluation of Flame Resistant Clothing for Protection Against Flash Fire Simulations Using an Instrumented Manikin.*

8.5.3 Sample Preparation.

8.5.3.1 For garments that are designated on the flame-resistant garment label to be washed, specimens shall be tested after one cycle of washing and drying as specified in 8.1.3.

8.5.3.2 For garments that are designated on the flame-resistant garment label to be dry-cleaned, specimens shall be tested after one cycle of dry cleaning as specified in 8.1.4.

8.5.3.3 For garments that are designated on the flame-resistant garment label to be either washed or dry-cleaned, specimens shall be tested after one cycle of washing and drying as specified in 8.1.3, or after one cycle of dry cleaning as specified in 8.1.4.

Copyright National Fire Protection Association
Provided by IHS under license with NFPA
No reproduction or networking permitted without license from IHS
Not for Resale

8.5.3.4 Samples for conditioning shall be full garments.

8.5.4 Procedure.

8.5.4.1 Specimens shall be tested in accordance with ASTM F 1930, *Test Method for Evaluation of Flame Resistant Clothing for Protection Against Flash Fire Simulations Using an Instrumented Manikin,* using an exposure heat flux of 84 kW/m^2 (2.02 cal/cm^2·sec) with an exposure time of 3 seconds.

8.5.4.2 The manikin shall be dressed in 150 g/m^2(4.5 oz/yd^2) (± 5 percent), jersey knit, 100 percent cotton underwear briefs and short-sleeve crew-neck T-shirts before the garment specimen is placed on the manikin.

8.5.5 Report.

8.5.5.1 The percent total body burn for each specimen shall be reported as the body burn rating.

8.5.5.2 The average predicted body burn rating of all specimens shall be calculated and reported.

8.5.6 Interpretation. The average predicted body burn rating shall be used to determine pass/fail performance for garment fabrics.

8.6 Thread Heat Resistance Test.

8.6.1 Application. The thread heat resistance test method shall apply to each type of thread used in the construction of the flame-resistant garment, other than embroidery.

8.6.2 Specimens. A total of three different determinations shall be made.

8.6.3 Sample Preparation.

8.6.3.1 Specimens shall be tested after conditioning as specified in 8.1.2.

8.6.3.2 Samples for conditioning shall be at least 10 cm (4 in.) long.

8.6.4 Procedure. Specimens shall be tested to a temperature of 260°C (500°F) in accordance with Method 1534, *Melting Point of Synthetic Fibers,* of Federal Test Method Standard 191A, *Textile Test Methods.*

8.6.5 Report. The pass/fail results for each specimen tested shall be reported.

8.6.6 Interpretation. One or more thread specimens failing this test shall constitute failing performance for the thread type.

8.7 Label Print Durability Test.

8.7.1 Application. This test method shall apply to flame-resistant garment product labels.

8.7.2 Specimens. A total of three different specimen labels shall be evaluated.

8.7.3 Sample Preparation.

8.7.3.1 For fabrics that are designated on the flame-resistant garment label to be washed, specimens shall be tested before and after 100 cycles of washing and drying as specified in 8.1.3.

8.7.3.2 For fabrics that are designated on the flame-resistant garment label to be dry-cleaned, specimens shall be tested before and after 100 cycles of dry cleaning as specified in 8.1.4.

8.7.3.3 For fabrics that are designated on the flame-resistant garment label to be either washed or dry-cleaned, specimens shall be tested before and after 100 cycles of washing and drying as specified in 8.1.3, or after 100 cycles of dry cleaning as specified in 8.1.4.

8.7.3.4 Samples for conditioning by laundering or dry cleaning shall include labels sewn onto a square sample of fabric measuring 0.84 m^2 (1 yd^2), meeting the requirements of Section 7.1. The labels shall be no closer than 51 mm (2 in.) apart in parallel strips.

8.7.4 Procedure. Specimens shall be examined at a distance of 30.5 cm (12 in.) by the unaided eye with 20/20 vision, or vision corrected to 20/20, for legibility to determine pass/fail.

8.7.5 Report. The pass/fail results for each specimen tested shall be reported.

8.7.6 Interpretation. One or more label specimens failing this test shall constitute failing performance.

Annex A Explanatory Material

Annex A is not a part of the requirements of this NFPA document but is included for informational purposes only. This annex contains explanatory material, numbered to correspond with the applicable text paragraphs.

A.1.2.1 Users are cautioned that flammable clothing can contribute to the severity of burn injuries through their ignition and continued burning after exposure to flash fire.

A.1.2.2 The testing requirements in Chapter 8 of this standard are not intended to establish the limitations of the working environment for personnel involved in situations that might be exposed to chemical flash fires, but are intended to establish material performance.

Users should be advised that if unusual conditions prevail, or if there are signs of abuse or mutilation of the protective garment, or if modifications or replacements are made or accessories are added without authorization of the protective garment manufacturer, the margin of protection might be reduced.

Users should be advised that the protective properties in new protective garments, as required by this standard, can change as the product is worn and ages.

A.1.2.3 This standard is not designed to be utilized as a purchase specification. It is prepared, as far as practical, with regard to required performance, avoiding restriction of design wherever possible. Purchasers should specify departmental requirements for such items as color, markings, closures, pockets, and trim patterns. Tests specified in this standard should not be deemed as defining or establishing performance levels for protection from all flash fire environments.

A.1.3.2 Organizations responsible for fire-fighting applications should use protective clothing and equipment specifically designed for those activities. Applicable standards include the following:

(1) NFPA 1971, *Standard on Protective Ensembles for Structural Fire Fighting and Proximity Fire Fighting*
(2) NFPA 1977, *Standard on Protective Clothing and Equipment for Wildland Fire Fighting*

Organizations responsible for hazardous materials emergencies should use protective clothing and equipment specifically designed for those activities. Applicable standards include the following:

Copyright National Fire Protection Association
Provided by IHS under license with NFPA
No reproduction or networking permitted without license from IHS
Not for Resale

(1) NFPA 1991, *Standard on Vapor-Protective Ensembles for Hazardous Materials Emergencies*
(2) NFPA 1992, *Standard on Liquid Splash-Protective Ensembles and Clothing for Hazardous Materials Emergencies*

Organizations responsible for emergency medical operations should use protective clothing and equipment specifically designed for those activities. The applicable standard is NFPA 1999, *Standard on Protective Clothing for Emergency Medical Operations*.

A.3.2.1 Approved. The National Fire Protection Association does not approve, inspect, or certify any installations, procedures, equipment, or materials; nor does it approve or evaluate testing laboratories. In determining the acceptability of installations, procedures, equipment, or materials, the authority having jurisdiction may base acceptance on compliance with NFPA or other appropriate standards. In the absence of such standards, said authority may require evidence of proper installation, procedure, or use. The authority having jurisdiction may also refer to the listings or labeling practices of an organization that is concerned with product evaluations and is thus in a position to determine compliance with appropriate standards for the current production of listed items.

A.3.2.2 Authority Having Jurisdiction. The phrase "authority having jurisdiction," or its acronym AHJ, is used in NFPA documents in a broad manner, since jurisdictions and approval agencies vary, as do their responsibilities. Where public safety is primary, the authority having jurisdiction may be a federal, state, local, or other regional department or individual such as a fire chief; fire marshal; chief of a fire prevention bureau, labor department, or health department; building official; electrical inspector; or others having statutory authority. For insurance purposes, an insurance inspection department, rating bureau, or other insurance company representative may be the authority having jurisdiction. In many circumstances, the property owner or his or her designated agent assumes the role of the authority having jurisdiction; at government installations, the commanding officer or departmental official may be the authority having jurisdiction.

A.3.2.4 Listed. The means for identifying listed equipment may vary for each organization concerned with product evaluation; some organizations do not recognize equipment as listed unless it is also labeled. The authority having jurisdiction should utilize the system employed by the listing organization to identify a listed product.

A.3.3.11 Flame Resistance. Flame resistance can be an inherent property of a material, or it can be imparted by specific treatment.

A.3.3.12 Flash Fire. A flash fire requires an ignition source and a hydrocarbon atmosphere or atmosphere containing combustible finely divided particles (e.g., coal dust or grain) that contains a concentration above the lower explosive limit of the chemical. Both hydrocarbon and dust flash fires generate temperatures from 540°C to 1040°C (1000°F to 1900°F). A flash fire depends on the size of the gas or vapor cloud, and when ignited, the flame front expands outward in the form of a fireball. The resulting effect of the fireball's energy with respect to radiant heat significantly enlarges the hazard areas around the gas released.

A.3.3.14.2 Single-Use Garment. What constitutes a "use" will be defined by the garment manufacturer. A single use could include unpacking, or one donning, or one wearing. In the absence of any manufacturer's specific information, one "use" should be considered any one-time wearing of the garment.

A.3.3.24 Product Label. The product label is not the label, symbol, or identifying mark of the certification organization; however, the label, symbol, or identifying mark of the certification organization can be attached to, or can be part of, the product label.

A.4.1.5 NFPA, on occasion, has received complaints that certain items of fire and emergency services protective clothing or protective equipment might be carrying labels falsely identifying them as compliant with an NFPA standard. The requirement for placing the certification organization's mark on or next to the product labels helps ensure that the purchaser can readily determine compliance of the respective product through independent third-party certification.

A.4.2.1 The certification organization should have sufficient breadth of interest and activity so that the loss or award of a specific business contract would not be a determining factor in the financial well-being of the agency.

A.4.2.5 The contractual provisions covering a certification program should contain clauses advising the manufacturer that if requirements change, the product should be brought into compliance with the new requirements by a stated effective date through a compliance review program involving all currently listed products.

Without the clauses, certifiers would not be able to move quickly to protect their name, marks, or reputation. A product safety certification program would be deficient without these contractual provisions and the administrative means to back them up.

A.4.2.9 Investigative procedures are important elements of an effective and meaningful product safety certification program. A preliminary review should be carried out on products submitted to the agency before any major testing is undertaken.

Good practice should be followed regarding the use of laboratory manuals, form data sheets, documented calibration and calibration routines, performance verification, proficiency testing, and staff qualification training programs.

A.4.2.11 Such inspections should include, in most instances, witnessing of production tests. With certain products, the certification organization inspectors should select samples from the production line and submit them to the main laboratory for countercheck testing. With other products, it might be desirable to purchase samples in the open market for test purposes.

A.4.2.15 For further information and guidance on recall programs, see 21 CFR 7, Subpart C.

A.4.4.1.3 ISO 9000, *Quality Management Systems — Fundamentals and Vocabulary*, defines quality terms and concepts. It gives an overview of the content and use of the entire ISO 9000 series. A useful cross-reference to the series' quality system elements is found in Annex A of ISO 9000.

ISO 9001, *Quality Management Systems — Requirements*, is used when the quality system to be assessed covers several stages of one firm's processes. It prescribes quality system requirements for design, development, production, installation, and servicing.

A.5.1.1 Purchasers might wish to include a requirement in the purchase specifications for an additional label that includes certain information such as the date of manufacture, manufacturer's name, and protective garment identification number to be located in a protected location on the protective

Copyright National Fire Protection Association
Provided by IHS under license with NFPA
No reproduction or networking permitted without license from IHS
Not for Resale

garment in order to reduce the chance of label degradation and as a backup source of information to aid in protective garment tracking or during an investigation.

A.5.1.4 See A.4.1.5.

A.5.2.1 The garment manufacturer should provide, at a minimum, the following instructions and information with each flame-resistant garment:

(1) Pre-use information
   (a) Safety considerations
   (b) Limitations of use
   (c) Garment marking recommendations and restrictions
   (d) Warranty information
(2) Preparation for use
   (a) Sizing/adjustment
   (b) Recommended storage practices
(3) Inspection frequency and details
(4) Donning and doffing procedures
(5) Proper use consistent with NFPA 2113, *Standard on Selection, Care, Use, and Maintenance of Flame-Resistant Garments for Protection of Industrial Personnel Against Flash Fire*
(6) Maintenance and cleaning
   (a) Cleaning instructions and precautions
   (b) Maintenance criteria and methods of repair where applicable
(7) Retirement and disposal criteria

A.5.2.2 The selection of protective clothing size relates directly to the garment's ability to function properly. In occupations such as the petrochemical industry, proper fit and function relate directly to the wearer's ability to perform assigned jobs. Issues of proper fit are directly associated with the risk of injury. Protective clothing that restricts movement will result in lost efficiency and can promote injury and illness. Proper sizing is a factor in the ability of a person to perform tasks that often involve life or death situations. Protective clothing must fit well to function properly when additional safety equipment or other garments are worn. In addition, the selection of flame-resistant garment size has a direct impact on maintaining appropriate protection in areas where the flame-resistant garment has an interface with safety equipment or other protective garments. ASTM F 1731, *Standard Practice for Body Measurements and Sizing of Fire and Rescue Services Uniforms and Other Thermal Hazard Protective Clothing*, might be found useful when selecting protective clothing for technical operations. ASTM F 1731 primarily addresses processes for sizing flame-resistant garments; however, the techniques described are useful in the selection of protective clothing addressed in this standard.

A.8.1.3 Tergitol 15.S.9 is available from Union Carbide. Sodium metasilicate is available from Tilly Chemical Co. under the trade name Metso 2048 beads, anhydrous sodium metasilicate. Sodium tripolyphosphate is available from Tilly Chemical Co. under the trade name Amoto. Sodium silicofluoride is available from UNX Chemical Co. under the trade name Sourcide. Materials from other sources that are of equivalent chemical composition and concentration can be used in place of the laundry chemicals listed herein.

One example of a suitable industrial laundry machine is a Milnor Model 30015C6M-AAC. Equivalents can be used.

One example of a suitable industrial tumble dryer is a Huebsch Originator, Model 37CSH. Equivalents can be used.

A.8.2.5.2.5 The convergence of the Meker burners can be checked using a navy blue, piece-dyed aramid fabric and operating the burners for a couple of seconds. The pattern of discoloration on the material should appear to be uniform and in the center of the specimen. Any noncircular or non-uniform discoloration should be cause for adjustment of the Meker burners to achieve convergence.

A.8.2.5.3.10 Testing of fabrics in this configuration is known as "spaced" testing.

A.8.2.5.3.13.4 *Copper Calorimeter Calibration, Repair, and Cleaning Procedures.* Calibration of the copper calorimeter is based on the determination of total heat flux as found in 8.2.5.2. The physical constants used in calibration calculations with these sensors are sensitive to changes in copper mass and/or emissivity values. The calorimeter's thermophysical values can be calculated based on the discussion in 8.2.5.2.1.2.

Copper Calorimeter Repair Procedures. The copper disk can be removed from its support board and checked to ensure that the thermocouple-to-disk connection is securely made. A loose connection should be repaired. To repair a loose connection, the thermocouple data transfer wire should be removed, while leaving the short thermocouple wire extending from the sensor's back side. The thermocouple should be resecured, if possible, by reconnecting according to Figure 8.2.4.1.15. If the thermocouple cannot be resecured, the entire assembly, thermocouple and copper disk, should be replaced.

Copper Calorimeter Cleaning Procedures. The sensing surface should be cleaned using an appropriate solvent to remove deposits of tars and char that have accumulated. A mild abrasive may be required to remove some deposits. Care must be taken when using an abrasive to remove deposits so as not to remove copper from the surface. Repainting should be done with a high temperature flat black paint of known emissivity, with a value of no less than 0.9. It can take two or three light coats to completely and evenly cover the cleaned surface. The freshly painted surface should be heated gently to drive off any remaining organic solvents before use. It is recommended to track the weight of the sensor assembly (copper disk and thermocouple) for changes in mass due to cleaning and repainting. Replacement should be considered when the total mass has changed by ± 0.1 g.

A.8.2.5.3.14 Testing of garment fabrics in this configuration is known as "contact" testing.

A.8.2.5.5.1 If a computer software program is used, the sensor response should be compared with the data describing the human tissue heat tolerance to determine when these values are the same. The time from the start of the exposure to the time when these values are the same is the exposure time.

Annex B Properties for Evaluating Flame-Resistant Garments

This annex is not a part of the requirements of this NFPA document but is included for informational purposes only.

B.1 Test Properties and Methods. Table B.1 provides a description of the test properties and methods used for evaluating flame-resistant garments. A number of additional properties can be used in the evaluation of flame-resistant garments that are not required as part of this standard. Table B.1 also lists these additional properties, recommended test methods, and their suggested application.

--`,,```,,,,````-`-`,,`,,`,`,,`---

Copyright National Fire Protection Association
Provided by IHS under license with NFPA
No reproduction or networking permitted without license from IHS
Not for Resale

Table B.1 Performance Properties and Additional Evaluation Properties for Flame-Resistant Garments

Property (Section No.)	Test Method Cited	Description of Test Method	Application of Test Method
Mandatory Tests			
Thermal protective performance (TPP) (7.1.1)	Method appears in Section 8.2	A 150 mm (6 in.) square fabric specimen is placed on a specimen holder that suspends the specimen horizontally over two Meker burners and a radiant panel. The heat and flame source is adjusted to provide an exposure heat flux of 83 kW/m^2 (2.0 cal/cm^2·sec). A weighted sensor containing a copper calorimeter is placed on top of the specimen and measures the heat transfer through the specimen. A water-cooled shutter between the specimen and heat source is withdrawn to begin the exposure. The test measures the amount of heat through the specimen to cause a second-degree burn. This time is multiplied by the exposure heat flux to provide a TPP rating. TPP ratings are measured with the sensor both in "contact" with the specimen and "spaced" 6 mm (¼ in.) away from the specimen.	This test is used to measure the thermal insulation provided by garment materials. The TPP test uses an exposure heat flux that is representative of flash fire environments. NFPA 2112 requires that specimens have a TPP rating of 12.6 J/cm^2 (3.0 cal/cm^2) or more when measured in "contact," simulating direct contact with the skin, and 25 J/cm^2 (6.0 cal/cm^2) or more when measured "spaced," simulating an air gap between the skin and the garment material. Higher TPP ratings indicate better performance for this test.
Flame resistance (7.1.2)	ASTM D 6413; Washing and drying per commercial laundering procedure or dry cleaning (100 cycles) (Section 8.3)	A 75 mm × 305 mm (3 in. × 12 in.) fabric specimen is placed in a holder that is suspended vertically over a 38 mm (1½ in.) high methane-fueled flame. The specimen is placed 19 mm (¾ in.) into the flame for 12 seconds. After exposure to the flame, the amount of time during which the specimen continues to burn (afterflame) is recorded. The length of the burn or char length is then measured by attaching a weight to the specimen and measuring the length of the tear along the burn line. Observations are recorded if any melting and dripping is observed. Samples are tested in this manner both before and after 100 wash/dry cycles or 100 dry cleaning cycles.	This test is used to determine how easily fabrics ignite and how easily they continue to burn once ignited. In order to pass NFPA 2112, materials cannot have an average afterflame time greater than 2 seconds, a char length greater than 102 mm (4 in.), or any melting with dripping.
Thermal shrinkage resistance (7.1.3)	Method appears in Section 8.4; Washing and drying per commercial laundering procedure or dry cleaning (3 cycles)	A 381 mm (15 in.) square fabric specimen is marked for width and length dimensions and is then suspended in a forced air-circulating oven at 260°C (500°F). Following a 5-minute exposure, the specimen dimensions are remeasured and then compared against the original measurements to determine the amount of shrinkage. The specimen is examined for evidence of melting, dripping, separation, or ignition. Specimens that demonstrate such behavior fail the test.	Resistance to shrinkage of a fabric when exposed to heat is considered important in minimizing the effects of a flash fire. NFPA 2112 permits shrinkage in this laboratory-based test of 10 percent or less. Lower reported shrinkage indicates fabric that is more resistant to thermal shrinkage.
Heat resistance (7.1.4/7.3)	Method appears in Section 8.4; Washing and drying per commercial laundering procedure or dry cleaning (3 cycles)	The same exposure used for thermal shrinkage above is also used for measuring heat resistance. Fabrics or garment components not required to meet thermal shrinkage requirements can be 152 mm (6 in.) square specimens. Following a 5-minute exposure, the specimen is examined for evidence of melting and dripping, separation, or ignition. Specimens that demonstrate such behavior fail the test. The test is also applied to hardware items.	This test measures how garment fabrics and components react to the high heat that could occur during a flash fire. The purpose of the test is to prevent materials or components being used in garments that will easily ignite, melt, drip, or separate during exposure to high heat from being used in garments.

(continues)

Copyright National Fire Protection Association
Provided by IHS under license with NFPA
No reproduction or networking permitted without license from IHS
Not for Resale

Table B.1 *Continued*

Property (Section No.)	Test Method Cited	Description of Test Method	Application of Test Method
Manikin testing (7.1.5)	ASTM F 1930; Washing and drying per commercial laundering procedure or dry cleaning (1 cycle) (Section 8.5)	The fabric is made into a standardized coverall design and placed on an instrumented manikin that is dressed in cotton underwear. The manikin is subjected to an overall flame and heat exposure averaging 83 kW/m^2 (2.0 cal/cm^2·sec) for 3 seconds. Sensors embedded in the manikin's skin predict whether a second- or third-degree burn will occur at that specific location. A computer program determines the percentage of the body that would sustain second- or third-degree burns. This percentage is related to a body burn rating.	This test provides an overall evaluation of how the fabric performs in a standardized coverall design. NFPA 2112 requires body burn ratings of 50 or less. Lower body burn ratings indicate greater protection provided by the fabric.
Thread melting resistance (7.2)	FTMS 191A, 1534 (Section 8.6)	A small segment of thread used in the stitching of station/work uniforms is placed in a flask containing an organic solvent and heated. (The solvent extracts substances that would interfere with the test.) Next, the extracted thread segment is put in a device that slowly heats the thread. The temperature at which the thread begins to melt is the melting temperature.	Thread used in flame-resistant garments must withstand temperatures of up to 260°C (500°F). If the melting temperature is less than 260°C (500°F), the thread fails the test. The temperature, 260°C (500°F), is consistent with the heat resistance test (above).
Label legibility (7.4)	Method appears in Section 8.7; Washing and drying per commercial laundering procedure or dry cleaning (100 cycles)	Sample labels containing the required product information are subjected to 100 wash/dry or dry cleaning cycles and then examined for legibility.	This requirement checks for label durability. Following this test, the labels must remain legible from a distance of at least 305 mm (12 in.).
Other Property Evaluations			
Fabric weight	ASTM D 3776	A known, specific area of fabric is weighed using a laboratory balance. The measured fabric weight is divided by the area of the fabric. This yields a fabric weight in ounces per square yard.	Fabric weights are commonly used to reference materials.
Tensile strength (grab method)	ASTM D 5034	In this test, a 102 mm × 204 mm (4 in. × 8 in.) fabric specimen is placed between the two grips of a tensile testing machine and pulled in the direction of the specimen's long axis until it breaks. The force measured at the site of the break is reported as the tensile strength. Tensile strength is reported for both the warp (machine) and fill (cross-machine) directions of the fabric.	Tensile strength is a measurement that describes the ease with which a woven material can be pulled apart. Higher tensile strengths indicate greater fabric strength.
Tear strength (Elmendorf method)	ASTM D 1424	In this test, a notched 102 mm × 204 mm (4 in. × 8 in.) material specimen is placed into a test device. The test device uses a pendulum that is allowed to fall by its own weight. The force of the falling pendulum tears the material beyond the notch. This test measures the force in pounds that is required to continue a tear in the notched test specimen. Tear resistance is reported for both the warp (machine) and fill (cross-machine) directions of the fabric.	Tear resistance is a measurement of the ease with which a woven fabric can be torn apart. Higher tear strengths indicate fabrics with greater resistance to tearing.

--`,,```,,,,````-`-`,,`,,`,`,,`---

Copyright National Fire Protection Association
Provided by IHS under license with NFPA
No reproduction or networking permitted without license from IHS
Not for Resale

Table B.1 *Continued*

Property (Section No.)	Test Method Cited	Description of Test Method	Application of Test Method
Material burst strength	ASTM D 3787	This test measures the force required to burst a knit or stretch woven fabric. A material specimen is clamped over a diaphragm that is inflated until the specimen bursts. The pressure at which the fabric bursts is the burst strength.	Burst strength is a measure of how easily a knit fabric can be penetrated by a hard round object. Higher burst strength indicates fabrics that are more resistant to bursting.
Laundering shrinkage	AATCC 135; Machine cycle 3; wash temp. IV; and drying procedure Aiii (number of cycles to be specified)	A fabric specimen, on which dimensions are marked and measured in both its width and length, is subjected to a specified number of separate wash/dry cycles under controlled conditions. Following the washing and drying, the dimensions of the material sample are compared to its original dimensions to determine the amount of shrinkage. Shrinkage is reported in both the warp (machine) and fill (cross-machine) directions of the fabric.	Laundering shrinkage is a measure of the percentage a fabric shrinks after laundering. Shrinkage measured for a fabric is not necessarily representative of shrinkage measured for a garment.
Laundering colorfastness	AATCC 61; Color change procedure	A fabric sample is subjected to controlled washing and drying conditions. Following exposure, the color of the material sample is compared to a color scale chart that indicates the degree of a color change. Color scale ratings range from Grade 1 (change in color) to Grade 5 (negligible or no change) in 0.5 increments.	Laundering colorfastness assesses the amount of color change, or fading, that occurs in the fabric following exposure to washing and drying. Fabrics with high color scale ratings are more resistant to color changes in laundering.
Dry cleaning colorfastness	AATCC 132	A fabric sample is subjected to controlled dry cleaning conditions. Following exposure, the color of the material sample is compared to a color scale chart that indicates the degree of a color change. Color scale ratings range from Grade 1 (change in color) to Grade 5 (negligible or no change) in 0.5 increments.	Dry cleaning colorfastness assesses the amount of color change, or fading, that occurs in the fabric following exposure to dry cleaning solvents. Fabrics with high color scale ratings are more resistant to color changes in dry cleaning.
Crocking colorfastness	AATCC 8	In this test method, a fabric sample is placed in a device against a white transfer cloth. The device rubs the fabric against the transfer cloth. The amount of color that is transferred to the white transfer cloth is assessed by a rating scale of Grade 1 to 5 in 0.5 increments (similar to laundering colorfastness).	Crocking colorfastness is a measure of the amount of color or dye that is transferred from the fabric by rubbing or abrasion. Fabrics with high color scale ratings are more resistant to loss of color through rubbing from wearing.
Light colorfastness, continuous xenon-arc lamp exposure	AATCC 16, Option e	A fabric specimen is placed in a weatherometer using a water-cooled xenon-arc lamp, which simulates intense exposure to sunlight and humidity. The exposure test is conducted for a total of two weeks. Following the exposure, the fabric is compared to a color scale chart that indicates the degree of color change. Color scale ratings range from Grade 1 to 5 in 0.5 increments (similar to laundering colorfastness).	Light colorfastness is a measure of the amount of color loss in a fabric due to extended exposure to light. Fabrics with high color scale ratings are more resistant to fading when exposed to outdoor light.

(continues)

Copyright National Fire Protection Association
Provided by IHS under license with NFPA
No reproduction or networking permitted without license from IHS
Not for Resale

Table B.1 *Continued*

Property (Section No.)	Test Method Cited	Description of Test Method	Application of Test Method
Seam efficiency	ASTM D 1683a	The strength of a seam is measured in the same way as fabric tensile strength. In this test, a garment seam specimen is placed between two grips in a tensile testing machine and pulled in a direction perpendicular to the seam line until it breaks. The force to break the seam can be compared to the force to break the fabric by itself. The location of the break in the specimen can also be reported.	Seam efficiency compares the strength of a seam to the fabric that it joins. Higher seam strength indicates stronger seams; however, seams that break in the fabric, as opposed to at the stitching or seam area, are stronger than the fabric itself.

Annex C Informational References

C.1 Referenced Publications. The documents or portions thereof listed in this annex are referenced within the informational sections of this standard and are not part of the requirements of this document unless also listed in Chapter 2 for other reasons.

C.1.1 NFPA Publications. National Fire Protection Association, 1 Batterymarch Park, Quincy, MA 02169-7471.

NFPA 1971, *Standard on Protective Ensembles for Structural Fire Fighting and Proximity Fire Fighting*, 2007 edition.

NFPA 1977, *Standard on Protective Clothing and Equipment for Wildland Fire Fighting*, 2005 edition.

NFPA 1991, *Standard on Vapor-Protective Ensembles for Hazardous Materials Emergencies*, 2005 edition.

NFPA 1992, *Standard on Liquid Splash-Protective Ensembles and Clothing for Hazardous Materials Emergencies*, 2005 edition.

NFPA 1999, *Standard on Protective Clothing for Emergency Medical Operations*, 2003 edition.

NFPA 2113, *Standard on Selection, Care, Use, and Maintenance of Flame-Resistant Garments for Protection of Industrial Personnel Against Flash Fire*, 2007 edition.

C.1.2 Other Publications.

C.1.2.1 AATCC Publications. American Association of Textile Chemists and Colorists, P.O. Box 12215, Research Triangle Park, NC 27709.

AATCC 8, *Evaluation Procedure,* 1996.

AATCC 16e, *Colorfastness to Light,* 1998.

AATCC 61, *Colorfastness to Laundering, Home and Commercial: Accelerated,* 1996.

AATCC 132, *Colorfastness to Dry Cleaning,* 1998.

AATCC 135, *Dimensional Changes in Automatic Home Laundering of Woven and Knit Fabrics,* 1995.

C.1.2.2 ASTM Publications. ASTM International, 100 Barr Harbor Drive, P.O. Box C700, West Conshohocken, PA 19428-2959.

ASTM D 1424, *Test Method for the Tear Resistance of Woven Fabrics by Fall Pendulum (Elmendorf) Apparatus,* 1997.

ASTM D 1683a, *Standard Test Method for Failure in Sewn Seams of Woven Fabric,* 1998.

ASTM D 3776, *Test Methods for Mass Per Unit Area (Weight) of Woven Fabric,* 1995.

ASTM D 3787, *Standard Test Method for Bursting Strength of Knitted Goods: Constant-Rate-of-Transverse (CRT) Ball Burst Test,* 1994.

ASTM D 5034, *Test Method for the Breaking Force and Elongation of Textile Fabrics (Grab Test),* 1995.

ASTM D 6413, *Test Method for Flame Resistance of Textiles (Vertical Test),* 1999.

ASTM F 1731, *Standard Practice for Body Measurements and Sizing of Fire and Rescue Services Uniforms and Other Thermal Hazard Protective Clothing,* 1996.

ASTM F 1930, *Test Method for Evaluation of Flame Resistant Clothing for Protection Against Flash Fire Simulations Using an Instrumented Manikin,* 1998.

C.1.2.3 GSA Publications. U.S. General Services Administration, 1800 F Street, N.W., Washington, DC 20405.

Federal Test Method Standard 191A, *Textile Test Methods,* July 20, 1978.

C.1.2.4 ISO Publications. International Organization for Standardization, 1, rue de Varembé, Case postale 56, CH-1211, Geneve 20, Switzerland.

ISO 9000, *Quality Management Systems — Fundamentals and Vocabulary,* 2000.

ISO 9001, *Quality Management Systems — Requirements,* 2000.

C.1.2.5 U.S. Government Publications. U.S. Government Printing Office, Washington, DC 20402.

Title 21, Code of Federal Regulations, Part 7, Subpart C.

C.2 Informational References. The following documents or portions thereof are listed here as informational resources only. They are not a part of the requirements of this document.

C.2.1 ANSI Publications. American National Standards Institute, Inc., 25 West 43rd Street, 4th Floor, New York, NY 10036.

ANSI Z34.1, *American National Standard for Third-Party Certification Program for Products, Processes, and Services*, 1993.

C.3 References for Extracts in Informational Sections. (Reserved)

Copyright National Fire Protection Association
Provided by IHS under license with NFPA
No reproduction or networking permitted without license from IHS
Not for Resale

Index

Copyright © 2006 National Fire Protection Association. All Rights Reserved.

The copyright in this index is separate and distinct from the copyright in the document that it indexes. The licensing provisions set forth for the document are not applicable to this index. This index may not be reproduced in whole or in part by any means without the express written permission of NFPA.

-A-

Accreditation/accredited (definition) 3.3.1
Accredited laboratory ..... 4.1.2, 4.2.6 to 4.2.8, 4.3.2, 4.3.3
Inspection of 4.3.1
Product modifications 4.3.10.2, 4.3.10.3
Agents
Biological 1.3.2
Definition 3.3.2.1
Radiological 1.3.2
Definition 3.3.2.2
Application of standard 1.3, A.1.3.2
Approved (definition) 3.2.1, A.3.2.1
Authority having jurisdiction (definition) 3.2.2, A.3.2.2

-B-

Biological agents 1.3.2
Definition 3.3.2.1
Body
Lower body (definition) 3.3.3.1
Upper body (definition) 3.3.3.2

-C-

Calibration program 4.4.5
Thermal protective performance (TPP) test ... 8.2.5.2, A.8.2.5.2.5
Certification/certified ..... Chap. 4
Definition 3.3.4
Inspection and testing 4.3
Manufacturer's quality assurance program 4.4, A.4.4.1.3
Previous standards, use of ..... 4.1.6 to 4.1.8
Program ..... 4.2, A.4.2.1 to A.4.2.15
Recertification 4.3.9
Certification organization ..... 4.1.7, 4.1.8, 4.2, A.4.2.1 to A.4.2.15
Definition 3.3.5
Inspection of facilities by ..... 4.3.1, 4.3.4 to 4.3.7
Product modifications 4.3.10.1
Compliance/compliant 4.1.1, 4.1.6, 4.1.8
Definition 3.3.6
Components
Definition 3.3.7
Inspection status of component materials 4.4.6

-D-

Definitions ..... Chap. 3
Design requirements ..... 4.3.7, Chap. 6
Drip
Definition 3.3.8
Fabric requirements 7.1.2, 7.1.4
Hardware requirements 7.3
Dry cleaning procedure 8.1.4

-E-

Emblems ..... 7.1.4.1; *see also* Product labels
Definition 3.3.9
Emergency medical operations A.1.3.2
Equivalency to standard 1.5
Evaluation of flame-resistant garments, properties for ..... Annex B

-F-

Fabric
Definition 3.3.10
Requirements 7.1
Tests ..... *see* Flame resistance; Heat and thermal shrinkage resistance; Manikin test; Thermal protective performance
Flame resistance 7.1.2
Definition 3.3.11, A.3.3.11
Test ..... 8.3, Table B.1
Apparatus 8.3.4
Application 8.3.1
Interpretation 8.3.7
Knit textile materials, specific requirements 8.3.9
Nonwoven textile materials, specific requirements 8.3.10
Procedure 8.3.5
Reflective striping, specific requirements 8.3.12
Report 8.3.6
Sample preparation 8.3.3
Small materials, specific requirements 8.3.11
Specimens 8.3.2
Woven textile materials, specific requirements 8.3.8
Flash fire (definition) 3.3.12, A.3.3.12
Flash fire exposure, overall
Manikin test ..... 8.5, Table B.1
Requirement 7.1.5
Follow-up program 4.2.11, A.4.2.11
Definition 3.3.13

-G-

Garments
Definition 3.3.14
Limited-use 1.3.2
Definition 3.3.14.1
Single-use 1.3.2
Definition 3.3.14.2, A.3.3.14.2

-H-

Hardware
Definition 3.3.15
Finishes, design requirements 6.1
Heat and thermal shrinkage resistance
Performance requirements 7.3
Test 8.4.10
Hazardous materials 1.3.2
Definition 3.3.16
Hazardous materials emergencies 1.3.2, A.1.3.2
Definition 3.3.17
Heat and thermal shrinkage resistance, fabric
Requirements 7.1.3, 7.1.4
Test ..... 8.4, Table B.1
Apparatus 8.4.4
Application 8.4.1
Hardware, specific requirements 8.4.10
Interpretation 8.4.7
Non-textile materials, specific requirements 8.4.9
Procedure 8.4.5
Report 8.4.6
Sample preparation 8.4.3
Specimens 8.4.2
Textile materials, specific requirements 8.4.8
Heat resistance, hardware ..... *see* Hardware
Heat resistance, thread ..... *see* Thread
Human tissue burn tolerance, preparation of 8.2.5.4, A.8.2.5.4.1

Copyright National Fire Protection Association
Provided by IHS under license with NFPA
No reproduction or networking permitted without license from IHS
Not for Resale

-I-

Industrial personnel (definition) 3.3.18
Inspection
Of accreditation and manufacturing facilities ..... 4.3.2 to 4.3.9
Component materials, inspection status of 4.4.6
Instructions for 4.4.2
Manufacturer's quality assurance program 4.4.1.1, 4.4.1.2
System 4.4.4
Instructions
Inspection and testing 4.4.2
User information 5.2.1, A.5.2.1
Interlinings 7.1.4.2
Definition 3.3.19
ISO 9000 ..... A.4.4.1.3
ISO 9001 ..... 4.4.1.3, A.4.4.1.3

-L-

Labeled/labeling .... 4.1.3, 4.1.5, 4.1.8, 5.1.4, A.5.1.4; *see also* Product labels
Definition 3.2.3
Recertification 4.3.9.2
Limited-use garments 1.3.2
Definition 3.3.14.1
Lining (definition) 3.3.20
Listed 4.1.3
Definition 3.2.4, A.3.2.4

-M-

Manikin test ..... 8.5, Table B.1
Manufacturer's quality assurance program 4.4, A.4.4.1.3
Measurement, units of 1.6
Melt .....*see also* Thread, heat resistance (melting resistance)
Definition 3.3.21
Fabric requirements 7.1.2, 7.1.4
Hardware requirements 7.3
Metal components 6.2
Model (definition) 3.3.22

-N-

Nonconforming materials, controlling 4.4.7

-P-

Performance requirements ..... Chap. 7
Fabric 7.1
Hardware 7.3
Label 7.4
Thread 7.2
Product (definition) 3.3.23
Product labels 4.1.4, 4.1.5, 5.1, A.4.1.5, A.5.1.1, A.5.1.4
Definition 3.3.24, A.3.3.24
Heat and thermal shrinkage resistance requirements, exclusion from 7.1.3, 7.1.4.1
Inspection of 4.3.4, 4.3.5
Printing durability (legibility)
Requirement 7.4
Test ..... 8.7, Table B.1
Product modifications 4.3.10
Recertification 4.3.9
Product recall system 4.4.1.1
Purpose of standard ..... 1.2, A.1.2.1 to A.1.2.3

-R-

Radiological agents 1.3.2
Definition 3.3.2.2
Recertification 4.3.9
Records 4.4.3
References ..... Chap. 2, Annex C
Reflective striping
Definition 3.3.25
Flame resistance
Requirement 7.1.2
Test 8.3.12
Heat and thermal shrinkage resistance
Requirement 7.1.4
Test 8.4.9
Reinforcement (definition) 3.3.26
Reports
Flame resistance test 8.3.6
Heat and thermal shrinkage resistance test 8.4.6
Label print durability test 8.7.5
Manikin test 8.5.5
Thermal protective performance (TPP) test 8.2.6
Thread heat resistance test 8.6.5
Retroactivity of standard 1.4
Room temperature conditioning procedure 8.1.2

-S-

Sample 4.3.8
Definition 3.3.27
Preparation procedures 8.1, A.8.1.3
Application 8.1.1
Dry cleaning procedure 8.1.4
Flame resistance test 8.3.3
Heat and thermal shrinkage resistance 8.4.3
Label print durability test 8.7.3
Manikin test 8.5.3
Room temperature conditioning procedure 8.1.2
Thermal protective performance (TPP) test 8.2.3
Thread heat resistance test 8.6.3
Washing and drying procedure 8.1.3, A.8.1.3
Scope of standard 1.1
Seam
Definition 3.3.28
Sewn seam (definition) 3.3.28.1
Separate
Definition 3.3.29
Fabric requirements 7.1.4
Hardware requirements 7.3
Shall (definition) 3.2.5
Should (definition) 3.2.6
Single-use garments 1.3.2
Definition 3.3.14.2, A.3.3.14.2
Sizing chart 5.2.2, A.5.2.2
Specimen
Definition 3.3.30
Flame resistance test 8.3.2
Heat and thermal shrinkage resistance test 8.4.2
Label print durability test 8.7.2
Manikin test 8.5.2
Thermal protective performance (TPP) test 8.2.2
Thread heat resistance test 8.6.2
Standard (definition) 3.2.7

-T-

Test apparatus
Flame resistance test 8.3.4
Heat and thermal shrinkage resistance 8.4.4
Thermal protective performance (TPP) test 8.2.4
Tests ..... 4.3.8, Chap. 8, B.1, Table B.1; *see also* Calibration program; Sample; Specimen
Accreditation of facilities for 4.3.2, 4.3.3
Flame resistance test .....*see* Flame resistance
Heat and thermal shrinkage resistance .....*see* Heat and thermal shrinkage resistance
Instructions for 4.4.2
Label print durability test 8.7
Manikin test ..... 8.5, Table B.1

Copyright National Fire Protection Association
Provided by IHS under license with NFPA
No reproduction or networking permitted without license from IHS
Not for Resale

Product label legibility ..... Table B.1
Records of 4.4.3
Thermal protective performance (TPP) ....*see* Thermal protective performance (TPP)
Thread heat resistance test ..... 8.6, Table B.1
Textile fabric .....*see also* Fabric
Definition 3.3.10.1
Specific test requirements for ..... 8.3.8 to 8.3.10, 8.4.8
Thermal protective performance (TPP)
Requirement 7.1.1
Test ..... 8.2, A.8.2.5.2.5 to A.8.2.5.5.1, Table B.1
Apparatus 8.2.4
Application 8.2.1
Determination of test results 8.2.5.5, A.8.2.5.5.1
Human tissue burn tolerance, preparation of 8.2.5.4, A.8.2.5.4.1
Interpretation 8.2.7
Procedure ..... 8.2.5, A.8.2.5.2.5 to A.8.2.5.5.1
Report 8.2.6
Sample preparation 8.2.3
Specimens 8.2.2
Thermal shrinkage resistance .....*see* Heat and thermal shrinkage resistance, fabric
Third-party audit 4.4.8
Thread, heat resistance (melting resistance)
Requirements 7.2
Test ..... 8.6, Table B.1
Trouser (definition) 3.3.31

-U-

Units of measurement 7.1.4
User information 4.3.6, 5.2, A.5.2.1, A.5.2.2

-W-

Washing and drying procedure 8.1.3, A.8.1.3

Copyright National Fire Protection Association
Provided by IHS under license with NFPA
No reproduction or networking permitted without license from IHS
Not for Resale

Sequence of Events Leading to Issuance of an NFPA Committee Document

Step 1: Call for Proposals

- Proposed new Document or new edition of an existing Document is entered into one of two yearly revision cycles, and a Call for Proposals is published.

Step 2: Report on Proposals (ROP)

- Committee meets to act on Proposals, to develop its own Proposals, and to prepare its Report.
- Committee votes by written ballot on Proposals. If two-thirds approve, Report goes forward. Lacking two-thirds approval, Report returns to Committee.
- Report on Proposals (ROP) is published for public review and comment.

Step 3: Report on Comments (ROC)

- Committee meets to act on Public Comments to develop its own Comments, and to prepare its report.
- Committee votes by written ballot on Comments. If two-thirds approve, Report goes forward. Lacking two-thirds approval, Report returns to Committee.
- Report on Comments (ROC) is published for public review.

Step 4: Technical Report Session

- "*Notices of intent to make a motion"* are filed, are reviewed, and valid motions are certified for presentation at the Technical Report Session. ("Consent Documents" that have no certified motions bypass the Technical Report Session and proceed to the Standards Council for issuance.)
- NFPA membership meets each June at the Annual Meeting Technical Report Session and acts on Technical Committee Reports (ROP and ROC) for Documents with "certified amending motions."
- Committee(s) vote on any amendments to Report approved at NFPA Annual Membership Meeting.

Step 5: Standards Council Issuance

- Notification of intent to file an appeal to the Standards Council on Association action must be filed within 20 days of the NFPA Annual Membership Meeting.
- Standards Council decides, based on all evidence, whether or not to issue Document or to take other action, including hearing any appeals.

Committee Membership Classifications

The following classifications apply to Technical Committee members and represent their principal interest in the activity of the committee.

M *Manufacturer:* A representative of a maker or marketer of a product, assembly, or system, or portion thereof, that is affected by the standard.

U *User:* A representative of an entity that is subject to the provisions of the standard or that voluntarily uses the standard.

I/M *Installer/Maintainer:* A representative of an entity that is in the business of installing or maintaining a product, assembly, or system affected by the standard.

L *Labor:* A labor representative or employee concerned with safety in the workplace.

R/T *Applied Research/Testing Laboratory:* A representative of an independent testing laboratory or independent applied research organization that promulgates and/or enforces standards.

E *Enforcing Authority:* A representative of an agency or an organization that promulgates and/or enforces standards.

I *Insurance:* A representative of an insurance company, broker, agent, bureau, or inspection agency.

C *Consumer:* A person who is, or represents, the ultimate purchaser of a product, system, or service affected by the standard, but who is not included in the *User* classification.

SE *Special Expert:* A person not representing any of the previous classifications, but who has a special expertise in the scope of the standard or portion thereof.

NOTES;
1. "Standard" connotes code, standard, recommended practice, or guide.
2. A representative includes an employee.
3. While these classifications will be used by the Standards Council to achieve a balance for Technical Committees, the Standards Council may determine that new classifications of members or unique interests need representation in order to foster the best possible committee deliberations on any project. In this connection, the Standards Council may make appointments as it deems appropriate in the public interest, such as the classification of "Utilities" in the National Electrical Code Committee.
4. Representatives of subsidiaries of any group are generally considered to have the same classification as the parent organization.

Copyright National Fire Protection Association
Provided by IHS under license with NFPA
No reproduction or networking permitted without license from IHS
Not for Resale

NFPA Technical Committee Document Proposal Form

NOTE: All Proposals must be received by 5:00 p.m. EST/EDST on the published Proposal Closing Date.

For further information on the standards-making process, please contact the Codes and Standards Administration at 617-984-7249.

For technical assistance, please call NFPA at 617-770-3000.

FOR OFFICE USE ONLY

Log #:

Date Rec'd:

Please indicate in which format you wish to receive your ROP/ROC ☐ **electronic** ☐ **paper** ☒ **download**
(Note: If choosing the download option, you must view the ROP/ROC from our website; no copy will be sent to you.)

Date April 1, 200X **Name** John J. Doe **Tel. No.** 716-555-1234

Company Air Canada Pilot's Association

Street Address 123 Summer Street Lane **City** Lewiston **State** NY **Zip** 14092

Please indicate organization represented (if any)

1. (a) NFPA Document Title National Fuel Gas Code **NFPA No. & Year** 54, 200X Edition

(**b) Section/Paragraph** 3.3

2. Proposal Recommends (check one): ☐ new text ☒ revised text ☐ deleted text

3. Proposal (include proposed new or revised wording, or identification of wording to be deleted): [Note: Proposed text should be in legislative format, i.e., use underscore to denote wording to be inserted (inserted wording) and strike-through to denote wording to be deleted (~~deleted wording~~).]

Revise definition of effective ground-fault current path to read:

3.3.78 Effective Ground-Fault Current Path. An intentionally constructed, permanent, low impedance electrically conductive path designed and intended to carry ~~underground~~ electric fault current ~~conditions~~ from the point of a ground fault on a wiring system to the electrical supply source.

4. Statement of Problem and Substantiation for Proposal: (Note: State the problem that would be resolved by your recommendation; give the specific reason for your Proposal, including copies of tests, research papers, fire experience, etc. If more than 200 words, it may be abstracted for publication.)

Change uses proper electrical terms.

5. Copyright Assignment

(a) ☐ **I am the author of the text or other material (such as illustrations, graphs) proposed in this Proposal.**

(b) ☒ **Some or all of the text or other material proposed in this Proposal was not authored by me. Its source is as follows** (please identify which material and provide complete information on its source)**:**

ABC Co.

I hereby grant and assign to NFPA all and full rights in copyright in this Proposal and understand that I acquire no rights in any publication of NFPA in which this Proposal in this or another similar or analogous form is used. Except to the extent that I do not have authority to make an assignment in materials that I have identified in (b) above, I hereby warrant that I am the author of this Proposal and that I have full power and authority to enter into this assignment.

Signature (Required)

PLEASE USE SEPARATE FORM FOR EACH PROPOSAL • NFPA Fax: (617) 770-3500
Mail to: Secretary, Standards Council, National Fire Protection Association, 1 Batterymarch Park, Quincy, MA 02169-7471

8/29/2006

SAMPLE

Copyright National Fire Protection Association
Provided by IHS under license with NFPA
No reproduction or networking permitted without license from IHS
Not for Resale

NFPA Technical Committee Document Proposal Form

NOTE: All Proposals must be received by 5:00 p.m. EST/EDST on the published Proposal Closing Date.

For further information on the standards-making process, please contact the Codes and Standards Administration at 617-984-7249.

For technical assistance, please call NFPA at 617-770-3000.

FOR OFFICE USE ONLY

Log #: _____

Date Rec'd: _____

Please indicate in which format you wish to receive your ROP/ROC ☐ electronic ☐ paper ☐ download
(Note: If choosing the download option, you must view the ROP/ROC from our website; no copy will be sent to you.)

Date _____ **Name** _____ **Tel. No.** _____

Company _____

Street Address _____ **City** _____ **State** _____ **Zip** _____

Please indicate organization represented (if any) _____

1. (a) NFPA Document Title _____ **NFPA No. & Year** _____

(b) Section/Paragraph _____

2. Proposal Recommends (check one): ☐ new text ☐ revised text ☐ deleted text

3. Proposal (include proposed new or revised wording, or identification of wording to be deleted): [Note: Proposed text should be in legislative format, i.e., use underscore to denote wording to be inserted (inserted wording) and strike-through to denote wording to be deleted (~~deleted wording~~).]

4. Statement of Problem and Substantiation for Proposal: (Note: State the problem that would be resolved by your recommendation; give the specific reason for your Proposal, including copies of tests, research papers, fire experience, etc. If more than 200 words, it may be abstracted for publication.)

5. Copyright Assignment

(a) ☐ I am the author of the text or other material (such as illustrations, graphs) proposed in this Proposal.

(b) ☐ Some or all of the text or other material proposed in this Proposal was not authored by me. Its source is as follows (please identify which material and provide complete information on its source)**:**

_____

I hereby grant and assign to NFPA all and full rights in copyright in this Proposal and understand that I acquire no rights in any publication of NFPA in which this Proposal in this or another similar or analogous form is used. Except to the extent that I do not have authority to make an assignment in materials that I have identified in (b) above, I hereby warrant that I am the author of this Proposal and that I have full power and authority to enter into this assignment.

Signature (Required) _____

PLEASE USE SEPARATE FORM FOR EACH PROPOSAL • NFPA Fax: (617) 770-3500

Mail to: Secretary, Standards Council, National Fire Protection Association, 1 Batterymarch Park, Quincy, MA 02169-7471

8/29/2006

Copyright National Fire Protection Association
Provided by IHS under license with NFPA
No reproduction or networking permitted without license from IHS
Not for Resale