NFPA 211

Standard for Chimneys, Fireplaces, Vents, And Solid Fuel–Burning Appliances

2006 Edition

NFPA, 1 Batterymarch Park, Quincy, MA 02169-7471
An International Codes and Standards Organization

--`,,```,,,,````-`-`,,`,,`,`,,`---

Copyright National Fire Protection Association
Provided by IHS under license with NFPA
No reproduction or networking permitted without license from IHS

Not for Resale

IMPORTANT NOTICES AND DISCLAIMERS CONCERNING NFPA DOCUMENTS

NOTICE AND DISCLAIMER OF LIABILITY CONCERNING THE USE OF NFPA DOCUMENTS

NFPA codes, standards, recommended practices, and guides, of which the document contained herein is one, are developed through a consensus standards development process approved by the American National Standards Institute. This process brings together volunteers representing varied viewpoints and interests to achieve consensus on fire and other safety issues. While the NFPA administers the process and establishes rules to promote fairness in the development of consensus, it does not independently test, evaluate, or verify the accuracy of any information or the soundness of any judgments contained in its codes and standards.

The NFPA disclaims liability for any personal injury, property or other damages of any nature whatsoever, whether special, indirect, consequential or compensatory, directly or indirectly resulting from the publication, use of, or reliance on this document. The NFPA also makes no guaranty or warranty as to the accuracy or completeness of any information published herein.

In issuing and making this document available, the NFPA is not undertaking to render professional or other services for or on behalf of any person or entity. Nor is the NFPA undertaking to perform any duty owed by any person or entity to someone else. Anyone using this document should rely on his or her own independent judgment or, as appropriate, seek the advice of a competent professional in determining the exercise of reasonable care in any given circumstances.

The NFPA has no power, nor does it undertake, to police or enforce compliance with the contents of this document. Nor does the NFPA list, certify, test or inspect products, designs, or installations for compliance with this document. Any certification or other statement of compliance with the requirements of this document shall not be attributable to the NFPA and is solely the responsibility of the certifier or maker of the statement.

--`,,```,,,,````-`-`,,`,,`,`,,`---

Copyright National Fire Protection Association
Provided by IHS under license with NFPA
No reproduction or networking permitted without license from IHS

Not for Resale

ADDITIONAL NOTICES AND DISCLAIMERS

Updating of NFPA Documents

Users of NFPA codes, standards, recommended practices, and guides should be aware that these documents may be superseded at any time by the issuance of new editions or may be amended from time to time through the issuance of Tentative Interim Amendments. An official NFPA document at any point in time consists of the current edition of the document together with any Tentative Interim Amendments and any Errata then in effect. In order to determine whether a given document is the current edition and whether it has been amended through the issuance of Tentative Interim Amendments or corrected through the issuance of Errata, consult appropriate NFPA publications such as the National Fire Codes® Subscription Service, visit the NFPA website at www.nfpa.org, or contact the NFPA at the address listed below.

Interpretations of NFPA Documents

A statement, written or oral, that is not processed in accordance with Section 6 of the Regulations Governing Committee Projects shall not be considered the official position of NFPA or any of its Committees and shall not be considered to be, nor be relied upon as, a Formal Interpretation.

Patents

The NFPA does not take any position with respect to the validity of any patent rights asserted in connection with any items which are mentioned in or are the subject of NFPA codes, standards, recommended practices, and guides, and the NFPA disclaims liability for the infringement of any patent resulting from the use of or reliance on these documents. Users of these documents are expressly advised that determination of the validity of any such patent rights, and the risk of infringement of such rights, is entirely their own responsibility.

NFPA adheres to applicable policies of the American National Standards Institute with respect to patents. For further information contact the NFPA at the address listed below.

Law and Regulations

Users of these documents should consult applicable federal, state, and local laws and regulations. NFPA does not, by the publication of its codes, standards, recommended practices, and guides, intend to urge action that is not in compliance with applicable laws, and these documents may not be construed as doing so.

Copyrights

This document is copyrighted by the NFPA. It is made available for a wide variety of both public and private uses. These include both use, by reference, in laws and regulations, and use in private self-regulation, standardization, and the promotion of safe practices and methods. By making this document available for use and adoption by public authorities and private users, the NFPA does not waive any rights in copyright to this document.

Use of NFPA documents for regulatory purposes should be accomplished through adoption by reference. The term "adoption by reference" means the citing of title, edition, and publishing information only. Any deletions, additions, and changes desired by the adopting authority should be noted separately in the adopting instrument. In order to assist NFPA in following the uses made of its documents, adopting authorities are requested to notify the NFPA (Attention: Secretary, Standards Council) in writing of such use. For technical assistance and questions concerning adoption of NFPA documents, contact NFPA at the address below.

For Further Information

All questions or other communications relating to NFPA codes, standards, recommended practices, and guides and all requests for information on NFPA procedures governing its codes and standards development process, including information on the procedures for requesting Formal Interpretations, for proposing Tentative Interim Amendments, and for proposing revisions to NFPA documents during regular revision cycles, should be sent to NFPA headquarters, addressed to the attention of the Secretary, Standards Council, NFPA, 1 Batterymarch Park, P.O. Box 9101, Quincy, MA 02269-9101.

For more information about NFPA, visit the NFPA website at www.nfpa.org.

Copyright National Fire Protection Association
Provided by IHS under license with NFPA
No reproduction or networking permitted without license from IHS
Not for Resale

Copyright © 2006, National Fire Protection Association, All Rights Reserved

NFPA 211

Standard for

Chimneys, Fireplaces, Vents, and Solid Fuel–Burning Appliances

2006 Edition

This edition of NFPA 211, *Standard for Chimneys, Fireplaces, Vents, and Solid Fuel–Burning Appliances*, was prepared by the Technical Committee on Chimneys, Fireplaces, and Venting Systems for Heat-Producing Appliances. It was issued by the Standards Council on January 27, 2006, with an effective date of February 16, 2006, and supersedes all previous editions.

This edition of NFPA 211 was approved as an American National Standard on February 16, 2006.

Origin and Development of NFPA 211

In 1906, the NFPA Committee on Chimneys and Flues presented its first report. In 1914, under the jurisdiction of the then Committee on Field Practice, recommendations on chimneys and flues were prepared as Chapter VII of the *Field Practice Manual*, presented in 1914, and adopted in 1915. In 1926, the Association adopted the Chimney Construction Ordinance of the National Board of Fire Underwriters. In 1944, the Association adopted Article XI of the 1943 edition of the *Building Code of the National Board of Fire Underwriters* to supersede the former chimney ordinance. This action was taken by the Board of Directors in the name of the Association on the recommendation of the Committee on Field Practice.

In 1948, the subject of chimneys and flues was transferred to the Committee on Building Construction. In 1950, the Association adopted Article X of the 1949 *National Building Code of the National Board of Fire Underwriters* to supersede the 1944 standard, on the recommendation of the Committee on Building Construction and action by the Board of Directors.

In 1955, the subject of chimneys and flues was transferred to the newly appointed Committee on Chimneys and Heating Equipment. NFPA 211 was revised in 1957 to make the text consistent with the provisions on the same subject appearing in the *National Building Code of the National Board of Fire Underwriters*. NFPA 211 was revised in 1961 and completely rewritten in 1964. The 1964 edition included requirements for chimney connectors, which were previously covered in NFPA 212. (NFPA 212 was withdrawn in 1964.) Since 1964, revised editions of the standard were adopted by the Association in 1966, 1968, 1970, 1971, 1972, and 1977. In 1969, new text was added to cover the subject of spark arresters, which had been covered in NFPA 213. (NFPA 213 was withdrawn in 1969.)

In 1980, the scope of NFPA 211 was expanded to include solid-fuel appliances, and in the 1984 edition, major revisions were made to many sections, including important tables and graphs.

The 1988 edition included revisions to wall pass-through systems, including a new Table 5.7 that showed four chimney connector systems. A complete revision to Table 5.5(b) and changes to upgrade test requirements for factory-built chimneys were included.

The 1992 edition included new figures to show fireplace clearance requirements and other construction details, new requirements for combustion air ducts for fireplaces, and a new maintenance chapter that addressed inspection, cleaning, and repair of chimneys, vents, and fireplaces.

Definitions for *vent* and *chimney* were revised in the 1996 edition, and the chimney and vent selection charts were moved from Chapter 1 to a new Chapter 2. The new Chapter 2 included new figures to aid in the selection of chimney types.

The 2000 edition included new material that addressed mechanical draft systems, carbon monoxide detection and alarms, and sizing of masonry chimneys. A new chapter, Chapter 11, was added to give detailed direction for the inspection of existing chimneys.

The 2003 edition included a major editorial revision to comply with the *Manual of Style for NFPA Technical Committee Documents*. There were also technical changes in the requirements for the flue cross-sectional area and solid fuel–burning appliance connections to masonry fireplaces.

The 2006 edition of the standard includes new structural and foundation requirements for chimneys and fireplaces, requirements for the effective area of the chimney connector, and requirements for firebox and fireplace construction and sizing, as well as minor editorial changes.

--`,,```,,,````-`-`,,`,,`,`,,`---

Copyright National Fire Protection Association
Provided by IHS under license with NFPA
No reproduction or networking permitted without license from IHS
Not for Resale

Technical Committee on Chimneys, Fireplaces, and Venting Systems for Heat-Producing Appliances

Robert V. LeClair, *Chair*
State of Maine, ME [E]

Robert A. Rucker, *Secretary*
CMS Industries, Inc., NY [M]

James R. Eddy, New England Fire Cause & Origin, Inc., NH [SE]
Glen Edgar, Selkirk LLC, Inc., OH [M]
Royal Edwards, National Chimney Sweep Guild, FL [IM]
David Fetters, Hart & Cooley, Inc., MI [M]
Filippo Gavelli, Exponent, Failure Analysis Associates, MD [SE]
Charles H. Gibbons, Jr., Lampert - Lee & Associates, WI [SE]
Vickie Hodges, State Farm Insurance Companies, IL [I]
Marek Kulik, Flex-L International Inc., Canada [M]
Roy A. Meacham, Underwriters Laboratories Inc., WA [RT]
Anthony R. O'Neill, Boothbay Harbor, ME [C]
Richard D. Peacock, U.S. National Institute of Standards and Technology, MD [RT]
Shaun Ray, Metal-Fab, Inc., KS [M]
Rep. Gas Appliance Manufacturers Association, Inc.
Michael L. Savage, Sr., Middle Department Inspection Agency, Inc., MD [E]
Christopher R. Schulz, Van-Packer Company, Inc., IL [M]
Christopher B. Shiver, Cerny & Ivey Engineers, Inc., GA [SE]
Paul B. Stegmeir, Faribault, MN [SE]
Richard L. Stone, Quincy, CA [SE]
Lindley D. (Butch) Sutherland, Jr., Vermont Department of Labor and Industry, VT [E]
Benjamin V. L. Weathersby, Hearth, Patio & Barbecue Association, VA [M]

Alternates

Tammy Lynn Bitting, Van-Packer Company, Inc., IL [M]
(Alt. to C. R. Schulz)
James P. Brewer, Magic Sweep Corporation, VA [IM]
(Alt. to R. Edwards)
Rick Curkeet, Intertek Testing Services NA Inc., WI [RT]
(Alt. to Intertek Rep.)
Jack H. Goldman, Hearth, Patio & Barbecue Association, VA [M]
(Alt. to B. V. L. Weathersby)
Paul W. Moody, State of Maine, ME [E]
(Alt. to R. V. LeClair)
Keith Page, Hart & Cooley, Inc., MI [M]
(Alt. to D. Fetters)
Robert J. Zimmerman, Jr., Underwriters Laboratories Inc., IL [RT]
(Alt. to R. A. Meacham)

Nonvoting

Janet Buyer, U.S. Consumer Product Safety Commission, MD [C]

James D. Lake, NFPA Staff Liaison

This list represents the membership at the time the Committee was balloted on the final text of this edition. Since that time, changes in the membership may have occurred. A key to classifications is found at the back of the document.

NOTE: Membership on a committee shall not in and of itself constitute an endorsement of the Association or any document developed by the committee on which the member serves.

Committee Scope: This Committee shall have primary responsibility for documents on fire safety for the construction, installation, and use of chimneys, fireplaces, vents, venting systems, and solid fuel–burning appliances. It also shall be responsible for documents on clearances of heat-producing appliances from combustible materials and terms relating to chimneys, vents, and heat-producing appliances.

Copyright National Fire Protection Association
Provided by IHS under license with NFPA
No reproduction or networking permitted without license from IHS
Not for Resale

Contents

Chapter 1 Administration **211**– 5
1.1 Scope **211**– 5
1.2 Purpose **211**– 5
1.3 Retroactivity **211**– 5
1.4 Equivalency **211**– 5
1.5 Dimensions **211**– 5

Chapter 2 Referenced Publications **211**– 5
2.1 General **211**– 5
2.2 NFPA Publications **211**– 5
2.3 Other Publications **211**– 5
2.4 References for Extracts in Mandatory Sections **211**– 6

Chapter 3 Definitions **211**– 6
3.1 General **211**– 6
3.2 NFPA Official Definitions **211**– 6
3.3 General Definitions **211**– 6

Chapter 4 General Requirements **211**–13
4.1 Sizing and Draft **211**–13
4.2 Termination (Height) **211**–14
4.3 Enclosure **211**–14
4.4 Venting Systems in Ducts **211**–15
4.5 Flue Lining **211**–15
4.6 Caps and Spark Arresters for Chimneys and Vents **211**–15

Chapter 5 Selection of Chimney and Vent Types .. **211**–15
5.1 Chimney Types **211**–15
5.2 Chimney or Vent Selection **211**–16

Chapter 6 Factory-Built Chimneys and Chimney Units **211**–16
6.1 Type and Installation **211**–16
6.2 Use **211**–17
6.3 Sizing **211**–17

Chapter 7 Masonry Chimneys **211**–17
7.1 General Requirements **211**–17
7.2 Construction of Masonry Chimneys **211**–20
7.3 Clearance from Combustible Material **211**–22
7.4 Masonry Chimneys for Incinerators **211**–22

Chapter 8 Unlisted Metal Chimneys (Smokestacks) for Nonresidential Applications **211**–23
8.1 General Requirements **211**–23
8.2 Unlisted Metal Chimneys for Residential-Type or Low-Heat Appliances **211**–23
8.3 Unlisted Metal Chimneys for Medium-Heat Appliances **211**–24
8.4 Unlisted Metal Chimneys for High-Heat Appliances **211**–25

Chapter 9 Chimney Connectors and Vent Connectors **211**–25
9.1 Connectors Required **211**–25
9.2 Materials **211**–25
9.3 Length **211**–26
9.4 Size **211**–26
9.5 Clearance **211**–27
9.6 Location **211**–28
9.7 Installation **211**–28
9.8 Interconnection **211**–29
9.9 Dampers **211**–31
9.10 Draft Hoods **211**–31
9.11 Draft Regulators **211**–31

Chapter 10 Vents **211**–31
10.1 Types and Uses **211**–31
10.2 Size **211**–31
10.3 Location **211**–31
10.4 Termination (Height) **211**–31
10.5 Notice of Usage **211**–32
10.6 Installation **211**–32
10.7 Special Venting Arrangements **211**–33

Chapter 11 Fireplaces **211**–34
11.1 Factory-Built Fireplaces **211**–34
11.2 Masonry Fireplaces. **211**–34
11.3 Hearth Extensions **211**–36
11.4 Accessories **211**–37
11.5 Combustion Air Ducts **211**–37

Chapter 12 Solid Fuel–Burning Appliances **211**–37
12.1 Appliances **211**–37
12.2 Location of Appliances **211**–37
12.3 Air for Combustion and Ventilation **211**–37
12.4 Chimney Connections and Usage **211**–38
12.5 Mounting **211**–38
12.6 Clearances from Solid Fuel–Burning Appliances **211**–40
12.7 Accessories **211**–43

Chapter 13 Maintenance **211**–43
13.1 Initial Installation **211**–43
13.2 Annual Inspection **211**–43
13.3 Inspection — Connections **211**–44
13.4 Appliance or Connector Replacement ... **211**–44
13.5 Cleanout Doors **211**–44
13.6 Cleaning Methods **211**–44
13.7 Evidence of Damage **211**–44
13.8 Operating Malfunction **211**–44
13.9 Damaged or Deteriorated Liners **211**–44
13.10 Unused Openings **211**–44

Copyright National Fire Protection Association
Provided by IHS under license with NFPA
No reproduction or networking permitted without license from IHS
Not for Resale

Chapter 14 Inspection of Existing Chimneys **211**–44
14.1 Special Definitions **211**–44
14.2 General **211**–44
14.3 Type of Inspection **211**–44
14.4 Level I Inspections **211**–44
14.5 Level II Inspections **211**–46
14.6 Level III Inspections **211**–46

Annex A Explanatory Material **211**–46

Annex B Informational References **211**–50

Index **211**–51

Copyright National Fire Protection Association
Provided by IHS under license with NFPA
No reproduction or networking permitted without license from IHS
Not for Resale

NFPA 211

Standard for

Chimneys, Fireplaces, Vents, and Solid Fuel–Burning Appliances

2006 Edition

IMPORTANT NOTE: This NFPA document is made available for use subject to important notices and legal disclaimers. These notices and disclaimers appear in all publications containing this document and may be found under the heading "Important Notices and Disclaimers Concerning NFPA Documents." They can also be obtained on request from NFPA or viewed at www.nfpa.org/disclaimers.

NOTICE: An asterisk (*) following the number or letter designating a paragraph indicates that explanatory material on the paragraph can be found in Annex A.

Changes other than editorial are indicated by a vertical rule beside the paragraph, table, or figure in which the change occurred. These rules are included as an aid to the user in identifying changes from the previous edition. Where one or more complete paragraphs have been deleted, the deletion is indicated by a bullet (•) between the paragraphs that remain.

A reference in brackets [ ] following a section or paragraph indicates material that has been extracted from another NFPA document. As an aid to the user, the complete title and edition of the source documents for extracts in mandatory sections of the document are given in Chapter 2 and those for extracts in informational sections are given in Annex B. Editorial changes to extracted material consist of revising references to an appropriate division in this document or the inclusion of the document number with the division number when the reference is to the original document. Requests for interpretations or revisions of extracted text shall be sent to the technical committee responsible for the source document.

Information on referenced publications can be found in Chapter 2 and Annex B.

Chapter 1 Administration

1.1 Scope. This edition of NFPA 211 contains provisions for chimneys, fireplaces, venting systems, and solid fuel–burning appliances, including their installation. The standard applies to residential as well as commercial and industrial installations.

1.2 Purpose.

1.2.1 The primary concern of this standard is the removal of waste gases; the reduction of fire hazards associated with the construction and installation of chimneys, fireplaces, and venting systems for residential, commercial, and industrial appliances; and the installation of solid fuel–burning appliances.

1.2.2 This standard provides minimum construction and installation requirements for chimneys and vents suitable for use with fuel-burning appliances.

1.3 Retroactivity. The provisions of this standard reflect a consensus of what is necessary to provide an acceptable degree of protection from the hazards addressed in this standard at the time the standard was issued.

1.3.1 Unless otherwise specified, the provisions of this standard shall not apply to facilities, equipment, structures, or installations that existed or were approved for construction or installation prior to the effective date of the standard. Where specified, the provisions of this standard shall be retroactive.

1.3.2 In those cases where the authority having jurisdiction determines that the existing situation presents an unacceptable degree of risk, the authority having jurisdiction shall be permitted to apply retroactively any portions of this standard deemed appropriate.

1.3.3 The retroactive requirements of this standard shall be permitted to be modified if their application clearly would be impractical in the judgment of the authority having jurisdiction and only where it is clearly evident that a reasonable degree of safety is provided.

1.4 Equivalency. Nothing in this standard is intended to prevent the use of systems, methods, or devices of equivalent or superior quality, strength, fire resistance, effectiveness, durability, and safety over those prescribed by this standard.

1.4.1 Technical documentation shall be submitted to the authority having jurisdiction to demonstrate equivalency.

1.4.2 The system, method, or device shall be approved for the intended purpose by the authority having jurisdiction.

1.5 Dimensions. Where used to describe building construction components, all minimum dimensions specified in this standard are actual unless otherwise stated. Nominal dimensions shall be permitted to vary from their specified dimensions by no more than ½ in. (12.7 mm).

Chapter 2 Referenced Publications

2.1 General. The documents or portions thereof listed in this chapter are referenced within this standard and shall be considered part of the requirements of this document.

2.2 NFPA Publications. National Fire Protection Association, 1 Batterymarch Park, Quincy, MA 02169-7471.

NFPA 31, *Standard for the Installation of Oil-Burning Equipment,* 2001 edition.

NFPA 54, *National Fuel Gas Code,* 2006 edition.

NFPA 72®, National Fire Alarm Code®, 2002 edition.

NFPA 82, *Standard on Incinerators and Waste and Linen Handling Systems and Equipment,* 2004 edition.

NFPA 90B, *Standard for the Installation of Warm Air Heating and Air-Conditioning Systems,* 2006 edition.

NFPA 96, *Standard for Ventilation Control and Fire Protection of Commercial Cooking Operations,* 2004 edition.

NFPA 5000®, Building Construction and Safety Code®, 2006 edition.

2.3 Other Publications.

2.3.1 ASHRAE Publication. American Society of Heating, Refrigerating, and Air-Conditioning Engineers, Inc., 1791 Tullie Circle, NE, Atlanta, GA 30329-2305.

ASHRAE Handbook: HVAC Systems and Equipment, 2004.

2.3.2 ASTM Publications. American Society for Testing and Materials, 100 Barr Harbor Drive, West Conshohocken, PA 19428-2959.

ASTM C 27, *Standard Classification of Fireclay and High-Alumina Refractory Brick,* 1993.

Copyright National Fire Protection Association
Provided by IHS under license with NFPA
No reproduction or networking permitted without license from IHS
Not for Resale

ASTM C 199, *Standard Test Method for Pier Test for Refractory Mortars*, 1994.

ASTM C 315, *Standard Specification for Clay Flue Linings*, 1991.

ASTM C 476, *Standard Specification for Grout for Masonry*, 2002.

ASTM C 1261, *Standard Specification for Firebox Brick for Residential Fireplaces*, 1994.

ASTM E 136, *Standard Test Method for Behavior of Materials in a Vertical Tube Furnace at 750°C*, 1994.

2.3.3 UL Publications. Underwriters Laboratories Inc., 333 Pfingsten Road, Northbrook, IL 60062-2096.

UL 103, *Standard for Factory-Built Chimneys for Residential Type and Building Heating Appliance*, 2001, with revisions through December 2003.

UL 127, *Standard for Factory-Built Fireplaces*, 1996, with revisions through November 1999.

UL 378, *Standard for Draft Equipment*, 1993, with revisions through May 1998.

UL 959, *Standard for Medium Heat Appliance Factory–Built Chimneys*, 2001.

2.3.4 ULC Publication. Underwriters' Laboratories of Canada, 7 Underwriters Road, Toronto, Ontario M1R 3B4, Canada.

CAN/ULC-S629-M87, *Standard for 650°C Factory-Built Chimney Systems for Solid Fuel–Burning Appliances*, 1987, amended October 1998.

2.3.5 Other Publication.

Merriam-Webster's Collegiate Dictionary, 11th edition, Merriam-Webster, Inc., Springfield, MA, 2003.

2.4 References for Extracts in Mandatory Sections.

NFPA 54, *National Fuel Gas Code*, 2006 edition.
NFPA 85, *Boiler and Combustion Systems Hazards Code*, 2004 edition.

Chapter 3 Definitions

3.1 General. The definitions contained in this chapter shall apply to the terms used in this standard. Where terms are not defined in this chapter or within another chapter, they shall be defined using their ordinarily accepted meanings within the context in which they are used. *Merriam-Webster's Collegiate Dictionary*, 11th edition, shall be the source for the ordinarily accepted meaning.

3.2 NFPA Official Definitions.

3.2.1* Approved. Acceptable to the authority having jurisdiction.

3.2.2* Authority Having Jurisdiction (AHJ). An organization, office, or individual responsible for enforcing the requirements of a code or standard, or for approving equipment, materials, an installation, or a procedure.

3.2.3 Labeled. Equipment or materials to which has been attached a label, symbol, or other identifying mark of an organization that is acceptable to the authority having jurisdiction and concerned with product evaluation, that maintains periodic inspection of production of labeled equipment or materials, and by whose labeling the manufacturer indicates compliance with appropriate standards or performance in a specified manner.

3.2.4* Listed. Equipment, materials, or services included in a list published by an organization that is acceptable to the authority having jurisdiction and concerned with evaluation of products or services, that maintains periodic inspection of production of listed equipment or materials or periodic evaluation of services, and whose listing states that either the equipment, material, or service meets appropriate designated standards or has been tested and found suitable for a specified purpose.

3.2.5 Shall. Indicates a mandatory requirement.

3.2.6 Should. Indicates a recommendation or that which is advised but not required.

3.3 General Definitions.

3.3.1* Accessible (for Inspections). Capable of being exposed for inspection, maintenance, or repair without damage to the chimney or building structure or finish, but which may require the removal of doors, panels, or coverings using commonly available tools.

3.3.1.1* *Readily Accessible (for Inspections).* Exposed, or capable of being exposed, for operation, inspection, maintenance, or repair without the use of tools to open or remove doors, panels, or coverings.

3.3.2 Air.

3.3.2.1 *Combustion Air.* The air necessary to provide for the complete combustion of fuel and usually consisting of primary air, secondary air, and excess air.

3.3.2.2 *Dilution Air.* The air that enters the relief opening of a draft hood or draft diverter or the air that enters another opening in an appliance flue or venting system.

3.3.3 Appliance. Utilization equipment, normally built in standardized sizes or types, that is installed or connected as a unit to perform one or more functions such as clothes washing, air conditioning, food mixing, cooking, heating, or refrigeration.

3.3.3.1 *Counter Appliance (Gas).* Appliances such as gas-operated coffee brewers and coffee urns and any appurtenant water-heating equipment, food and dish warmers, hot plates, and griddles.

3.3.3.2 *Direct Vent Appliance (Sealed Combustion System Appliance).* A system consisting of an appliance, combustion air and flue gas connections between the appliance and the outside atmosphere, and a vent cap supplied by the manufacturer, and constructed so that all air for combustion is obtained from the outside atmosphere and all flue gases are discharged to the outside atmosphere.

3.3.3.3 *Factory-Built Appliance.* A manufactured appliance furnished by the manufacturer as a single assembly or as a package set of subassemblies or parts and including all the essential components necessary for it to function normally where installed as intended.

3.3.3.4 *Floor-Mounted Restaurant-Type Cooking Appliance.* A range, oven, broiler, or other miscellaneous cooking appliance designated for use in hotel and restaurant kitchens and for mounting on the floor.

3.3.3.5 *Fuel-Burning Appliance.*

3.3.3.5.1 *Automatically Lighted Fuel-Burning Appliance.* A fuel-burning appliance in which fuel to the main burner is normally turned on and ignited automatically.

Copyright National Fire Protection Association
Provided by IHS under license with NFPA
No reproduction or networking permitted without license from IHS
Not for Resale

3.3.3.5.2 ***Pellet Fuel–Burning Appliance.*** A closed combustion pellet vent or chimney-connected solid pellet fuel–burning appliance incorporating a fuel–feed control mechanism.

3.3.3.5.3 ***Solid Fuel–Burning Appliance.*** A chimney-connected device that burns solid fuel designed for purposes of heating, cooking, or both.

3.3.3.6 ***Heating Appliance.***

3.3.3.6.1 ***Attic-Type Heating Appliance.*** A heating appliance designed specifically for installation in an attic or in a space with low headroom that normally is unoccupied.

3.3.3.6.2 ***Building Heating Appliance.*** See 3.3.3.10, Nonresidential, Low-Heat Appliance.

3.3.3.6.3 ***Residential-Type Heating Appliance.*** Fuel-burning appliances, not including high-pressure steam boilers, that are mainly used in residences but that might be used in other buildings, and that do not produce continuous flue gas temperatures exceeding 1000°F (538°C).

3.3.3.7 ***Heat-Producing Appliance.*** An appliance that produces heat by utilizing electric energy or by burning fuel.

3.3.3.8 ***Nonresidential Appliance, 1400°F.*** A commercial, industrial, or institutional appliance needing a chimney capable of withstanding a continuous flue gas temperature not exceeding 1400°F (760°C).

3.3.3.9 ***Nonresidential, High-Heat Appliance.*** A commercial, industrial, or institutional appliance needing a chimney capable of withstanding a continuous flue gas temperature exceeding 1800°F (982°C).

3.3.3.10 ***Nonresidential, Low-Heat Appliance.*** A commercial, industrial, or institutional appliance needing a chimney capable of withstanding a continuous flue gas temperature not exceeding 1000°F (538°C).

3.3.3.11 ***Nonresidential, Medium-Heat Appliance.*** A commercial, industrial, or institutional appliance needing a chimney capable of withstanding a continuous flue gas temperature not exceeding 1800°F (982°C).

3.3.3.12 ***Vented Appliance.*** An indirect-fired appliance provided with a flue collar to accommodate a venting system for conveying flue gases to the outside atmosphere.

3.3.4 Appliance Casing (or Jacket). An enclosure forming the outside of the appliance.

3.3.5 Appliance Categories. See 3.3.89, Gas Appliance Categories.

3.3.6 Appliance Flue. See 3.3.82.1.

3.3.7 Ash. The solid residue that remains after combustion is complete.

3.3.8 Ash Receptacle Door. A door below the grade level providing access to the ash receptacle.

3.3.9 Attic-Type Heating Appliance. See 3.3.3.6.1.

3.3.10 Automatically Lighted Fuel-Burning Appliance. See 3.3.3.5.1.

3.3.11 Automatically Operated Damper. See 3.3.56.1.

3.3.12 Automatic Electric Igniter. A device for fuel burners designed to utilize electric energy for ignition of a fuel–air mixture at the burner.

3.3.13 Baffle. An object placed in an appliance to change the direction of, or to retard, the flow of air, air–fuel mixtures, or flue gases.

3.3.14 Barometric Draft Regulator. A device built into a fuel-burning appliance, or made a part of a chimney connector or vent connector, that functions to reduce excessive draft through an appliance to a desired value by admitting ambient air into the appliance chimney, chimney connector, vent, or vent connector.

3.3.15 Boiler. A closed vessel in which water is heated, steam is generated, steam is superheated, or any combination thereof by the application of heat from combustible fuels, in a self-contained or attached furnace. [**85**, 2004]

3.3.15.1 ***Combination-Fuel Boiler.*** A single boiler unit designed to burn more than one type of fuel (gas, oil, or solid), either separately or simultaneously, using either separate or common combustion chambers and flues.

3.3.15.2 ***High-Pressure Boiler.*** A boiler for generating steam at gauge pressures in excess of 15 psi (103 kPa), or for heating water to a temperature in excess of 250°F (121°C) or at a gauge pressure in excess of 160 psi (1103 kPa).

3.3.15.3 ***Hot Water Supply Boiler.*** A boiler used to heat water for purposes other than space heating.

3.3.15.4 ***Low-Pressure Boiler.*** A boiler for generating steam at gauge pressures not in excess of 15 psi (103 kPa) or for furnishing water at a maximum temperature of 250°F (121°C) at a maximum gauge pressure of 160 psi (1103 kPa).

3.3.15.5 ***Supplementary Boiler.*** A boiler, designed to burn one type of fuel (gas, oil, or solid), that is intended for supplementing a boiler burning another type of fuel (gas, oil, or solid) by means of a common heat transfer medium.

3.3.16 Bond. Where referring to bricklaying and masonry chimneys, that connection between brick, stone, or other masonry units formed by lapping them upon one another in carrying up the work, thereby forming an inseparable mass.

3.3.17 Breeching. The conduit conveying flue gas from the appliance to the chimney.

3.3.18 Btu. Abbreviation for British thermal unit. The quantity of heat needed to raise the temperature of 1 pound of water 1°F.

3.3.19 Building Heating Appliances. See 3.3.3.10, Nonresidential, Low-Heat Appliance.

3.3.20 Built-In Residential-Type Range. See 3.3.124.2.1.

3.3.21 Bungalow Utility-Type Range. See 3.3.124.1.

3.3.22 Cap.

3.3.22.1 ***Chimney Cap.*** A protective covering or housing for the top of a chimney intended to prevent the entry of rain, snow, animals, and birds, and to prevent downdrafts.

3.3.22.2 ***Vent Cap.*** A protective covering or housing attached to the vent termination, intended for preventing downdrafts and the entry of rain, snow, and animals.

3.3.23 Central Warm-Air, Forced-Air, Attic-Type Furnace. See 3.3.88.1.

3.3.24 Central Warm-Air, Forced-Air, Downflow-Type Furnace. See 3.3.88.2.

Copyright National Fire Protection Association
Provided by IHS under license with NFPA
No reproduction or networking permitted without license from IHS
Not for Resale

3.3.25 Central Warm-Air, Forced-Air, Horizontal-Type Furnace. See 3.3.88.3.

3.3.26 Central Warm-Air, Forced-Air-Type Furnace. See 3.3.88.4.

3.3.27 Central Warm-Air, Forced-Air, Upflow-Type Furnace. See 3.3.88.5.

3.3.28 Central Warm-Air Furnace. See 3.3.88.6.

3.3.29 Central Warm-Air, Gravity-Type Furnace. See 3.3.88.7.

3.3.30 Central Warm-Air, Gravity-Type Furnace with Booster Fan. See 3.3.88.8.

3.3.31 Central Warm-Air, Gravity-Type Furnace with Integral Fan. See 3.3.88.9.

3.3.32 Chimney. A structure containing one or more vertical or nearly vertical passageways for conveying flue gases to the outside atmosphere. *[See also 3.3.159.1, Gas Vent; 3.3.159, Vent; and 3.3.147.2, Venting System (Flue Gases).]*

3.3.32.1 ***Building Heating Appliance Type Chimney.***

3.3.32.1.1 ***Factory-Built, Building Heating Appliance Type Chimney.*** A heating appliance chimney suitable for continuous use at 1000°F (538°C), composed of listed, factory-built components, designed for open, nonenclosed use at specified minimum clearances to combustibles, and assembled in accordance with the terms of the listing to form the completed chimney.

3.3.32.1.2 ***Factory-Built, Residential-Type and Building Heating Appliance Type Chimney.*** A chimney suitable for use at 1000°F (538°C), which complies with the 10-minute 1700°F temperature test of UL 103, *Standard for Factory-Built Chimneys for Residential Type and Building Heating Appliance,* and is composed of listed, factory-built components that might be fully enclosed in combustible, residential-type construction, and that is assembled in accordance with the terms of the listing to form a completed chimney.

3.3.32.1.3* ***Type HT Factory-Built, Residential-Type and/or Building Heating Appliance Type Chimney.*** A residential type and building heating appliance chimney suitable for use at 1000°F (538°C), which complies with the optional 10-minute 2100°F (1449°C) temperature test of UL 103, *Standard for Factory-Built Chimneys for Residential Type and Building Heating Appliance.* Such chimneys are labeled as Type HT and are required for certain solid fuel–fired applications. *(See 6.1.3.1.)*

3.3.32.2 ***Factory-Built, 1400°F Type Chimney.*** A chimney suitable for continuous use at 1400°F (760°C), composed of listed, factory-built components, intended for open, nonenclosed use at specified minimum clearances to combustibles and for use in noncombustible locations, and assembled in accordance with the terms of the listing to form the completed chimney.

3.3.32.3 ***Factory-Built, Medium-Heat Appliance Type Chimney.*** A chimney used with appliances that produce maximum flue gas temperatures of 1800°F (982°C), composed of listed, factory-built components, suitable for open, nonenclosed use at specified minimum clearances to combustibles, and assembled in accordance with the terms of the listing to form the completed chimney.

3.3.32.4 ***Factory-Built, Positive Pressure Capable Chimney.*** A residential type or building heating appliance chimney, or both, listed for use in positive internal pressure applications.

3.3.32.5 ***Masonry Chimney.*** A field-constructed chimney of solid masonry units, bricks, stones, listed masonry chimney units, or reinforced portland cement concrete that is lined with suitable chimney flue liners and built in accordance with the provisions of Chapter 4 of this standard.

3.3.32.6 ***Unlisted Metal (Smokestack) Chimney.*** A manufactured or field-constructed chimney intended only for nonresidential applications having one or more metal walls, or made of metal with a refractory lining, and that is capable of withstanding the flue gas conditions of its use.

3.3.33 Chimney Cap. See 3.3.22.1.

3.3.34 Chimney Connector. See 3.3.52.1.

3.3.35 Chimney Connector-Type Heat Reclaimer. A heat exchanger intended to be installed in a chimney connector between a heating appliance and the chimney to transfer heat from the flue gases through metal to air or water.

3.3.36 Chimney Flue. See 3.3.82.2.

3.3.37 Chimney Flue Base (Base of Flue). The lowest point of a flue within a chimney.

3.3.38 Chute-Fed Incinerator (Class IIA). See 3.3.102.1.

3.3.39 Circulating Room Heater. See 3.3.98.1.1.

3.3.40 Cleanout Opening. An opening or hole in a chimney, usually located near its base, designed to allow access to the flue for purposes of removing ash, creosote, soot, and other extraneous matter that becomes trapped.

3.3.41 Clearance. The distance between a heat-producing appliance, chimney, chimney connector, vent, vent connector, or plenum and other surfaces.

3.3.42 Clothes Dryer. A device used to dry wet laundry by means of heat derived from the combustion of fuel or from electric heating elements.

3.3.42.1 ***Type 1 Clothes Dryer.*** A factory-built, mass-produced dryer, primarily used in a family living environment. It might or might not be coin-operated for public use and usually is the smallest unit both physically and in function.

3.3.42.2 ***Type 2 Clothes Dryer.*** A factory-built, mass-produced dryer used in a commercial business. It might or might not be operated by the public or a hired attendant. It might or might not be coin-operated and is not designed for use in an individual family living environment. It can be small, medium, or large in size.

3.3.43 Combination-Fuel Boiler. See 3.3.15.1.

3.3.44 Combination-Fuel Furnace. See 3.3.88.10.

3.3.45 Combination Room Heater/Fireplace Stove. See 3.3.78.1.

3.3.46 Combustible Material. See 3.3.110.1.

3.3.47 Combustion. A chemical process of oxidation that occurs at a rate fast enough to produce heat and usually light in the form of either a glow or flame.

3.3.48 Combustion Air. See 3.3.2.1.

Copyright National Fire Protection Association
Provided by IHS under license with NFPA
No reproduction or networking permitted without license from IHS
Not for Resale

3.3.49 Combustion Products. Constituents resulting from the combustion of a fuel with the oxygen of the air, including the inerts but excluding excess air.

3.3.50 Commercial-Industrial-Type Incinerator (Classes III, IV, V, VI, and VII). See 3.3.102.2.

3.3.51 Confined Space. A space whose volume is less than 50 ft^3/1000 Btu/hr (1.42 m^3/293 W) of the aggregate input rating of all appliances installed in that space.

3.3.52 Connector.

3.3.52.1 ***Chimney Connector.*** The pipe that connects a fuel-burning appliance to a chimney.

3.3.52.2 ***Vent Connector.*** The pipe that connects a fuel-burning appliance to a gas vent or Type L vent.

3.3.53 Corbel. Units of masonry projecting from or projecting upward and outward from the face of a wall or chimney in courses to form a support or ledge for a beam, rafter, or other member.

3.3.54 Counter Appliance (Gas). See 3.3.3.1.

3.3.55* Crown. A sloped covering for the top of a masonry chimney that is designed to shed water away from the flue liner and the chimney and to allow expansion and movement of the flue liner.

3.3.56 Damper. A valve or plate for controlling draft or the flow of gases, including air.

3.3.56.1 ***Automatically Operated Damper.*** A damper operated by an automatic control.

3.3.56.2 ***Flue Gas Damper.*** A damper located on the downstream side of the combustion chamber of a fuel-burning appliance, usually in a flue passage of the appliance or in the chimney or vent connector.

3.3.56.3 ***Manually Operated Damper.*** An adjustable damper manually set and locked in the desired position.

3.3.57 Decorative Shroud. A partial enclosure for aesthetic purposes that is installed at the termination of a venting system that surrounds or conceals the chimney or vent cap.

3.3.58 Dilution Air. See 3.3.2.2.

3.3.59 Dilution Flue. See 3.3.82.3.

3.3.60 Direct Vent Appliance (Sealed Combustion System Appliance). See 3.3.3.2.

3.3.61 Draft. A pressure difference that causes gases or air to flow through a chimney, vent, flue, or fuel burning equipment. [**54**, 2006]

3.3.61.1 ***Mechanical Draft.*** Draft produced by a fan or an air or steam jet. When a fan is located so as to push the flue gases through the chimney or vent, the draft is forced. When the fan is located so as to pull the flue gases through the chimney or vent, the draft is induced.

3.3.61.2 ***Natural Draft.*** Draft produced by the difference in the weight of a column of flue gases within a chimney or vent and a corresponding column of air of equal dimension outside the chimney or vent.

3.3.62 Draft Hood. A nonadjustable device built into an appliance, or made a part of the vent connector from an appliance, that is designed to (1) provide for the ready escape of the flue gases from the appliance in the event of no draft, backdraft, or stoppage beyond the draft hood, (2) prevent a backdraft from entering the appliance, and (3) neutralize the effect of stack action of the chimney or gas vent upon the operation of the appliance. [**54,** 2006]

3.3.63 Duct Furnace. See 3.3.88.11.

3.3.64 Engineered Venting or Chimney System. See 3.3.147.1.

3.3.65 Factory-Built, 1400°F Type Chimney. See 3.3.32.2.

3.3.66 Factory-Built Appliance. See 3.3.3.3.

3.3.67 Factory-Built, Building Heating Appliance Type Chimney. See 3.3.32.1.1.

3.3.68 Factory-Built Fireplace. See 3.3.75.1.

3.3.69 Factory-Built, Medium-Heat Appliance Type Chimney. See 3.3.32.3.

3.3.70 Factory-Built, Positive Pressure Capable Chimney. See 3.3.32.4.

3.3.71 Factory-Built, Residential Type and Building Heating Appliance Type Chimney. See 3.3.32.1.2.

3.3.72 Fan. A blower or exhauster assembly comprising blades or runners and housings or casings.

3.3.73 Fan-Type Floor Furnace. See 3.3.88.12.1.

3.3.74 Fan-Type Wall Furnace. See 3.3.88.14.1.

3.3.75 Fireplace. A hearth, fire chamber, or similarly prepared area and a chimney.

3.3.75.1 ***Factory-Built Fireplace.*** A fireplace composed of listed, factory-built components assembled in accordance with the terms of the listing.

3.3.75.2 ***Masonry Fireplace.*** A hearth and fire chamber of solid masonry units, such as bricks, stones, listed masonry units, or reinforced concrete, provided with a suitable chimney.

3.3.76 Fireplace Accessories. Accessories intended for field installation into or attachment to existing masonry fireplaces. These include such items as heat exchangers, door assemblies, tubular grates, and blowers.

3.3.77 Fireplace Insert. A factory-built, field-installed product consisting of a firebox assembly designed to be installed within or partially within the fire chamber of a fireplace that uses the fireplace flue to vent the products of combustion.

3.3.78 Fireplace Stove. A freestanding, chimney-connected, solid fuel-burning appliance that is designed to be operated with the fire chamber either open or closed.

3.3.78.1 ***Combination Room Heater/Fireplace Stove.*** A chimney-connected, solid fuel-burning room heater that is designed to be operated with the fire chamber either open or closed.

3.3.79 Floor Furnace. See 3.3.88.12.

3.3.80 Floor Protector. A noncombustible surfacing applied to the floor area underneath and extending in front, to the sides, and to the rear of a heat-producing appliance.

3.3.81 Floor-Mounted Restaurant-Type Cooking Appliance. See 3.3.3.4.

3.3.82 Flue. The general term for a passage through which gases are conveyed from the combustion chamber to the outer air.

Copyright National Fire Protection Association
Provided by IHS under license with NFPA
No reproduction or networking permitted without license from IHS
Not for Resale

3.3.82.1 ***Appliance Flue.*** The flue passage within an appliance.

3.3.82.2 ***Chimney Flue.*** The passage in a chimney for conveying the flue gases to the outside atmosphere.

3.3.82.3 ***Dilution Flue.*** A passage designed to effect the dilution of flue gases with air before discharge from an appliance.

3.3.83 Flue Collar. That portion of an appliance designed for attachment of a chimney or vent connector or a draft hood.

3.3.84 Flue-Fed Incinerator (Class II). See 3.3.102.3.

3.3.85 Flue Gas Damper. See 3.3.56.2.

3.3.86 Flue Gases. See 3.3.91.1.

3.3.87 Fuel.

3.3.87.1 ***Pellet Fuel.*** A solid processed fuel of specified size and composition capable of being fed to the appliance combustion system at a controlled rate.

3.3.87.2 ***Solid Fuel.*** Wood, coal, and other similar organic materials and any combination of them.

3.3.88 Furnace.

3.3.88.1 ***Central Warm-Air, Forced-Air, Attic-Type Furnace.*** A forced-air-type furnace designed specifically for installation in an attic or in a space with low headroom that is normally occupied.

3.3.88.2 ***Central Warm-Air, Forced-Air, Downflow-Type Furnace.*** A forced-air-type furnace designed with airflow essentially in a vertical path, discharging air at or near the bottom of the furnace.

3.3.88.3 ***Central Warm-Air, Forced-Air, Horizontal-Type Furnace.*** A forced-air-type furnace designed with airflow through the furnace essentially in a horizontal path.

3.3.88.4 ***Central Warm-Air, Forced-Air-Type Furnace.*** A central furnace equipped with a blower that provides the primary means for the circulation of air.

3.3.88.5 ***Central Warm-Air, Forced-Air, Upflow-Type Furnace.*** A forced-air-type furnace designed with airflow essentially in a vertical path, discharging air at or near the top of the furnace.

3.3.88.6 ***Central Warm-Air Furnace.*** A self-contained indirect-fired or electrically heated appliance designed to supply heated air through ducts to spaces remote from or adjacent to the appliance location.

3.3.88.7 ***Central Warm-Air, Gravity-Type Furnace.*** A central furnace depending primarily on circulation of air by gravity.

3.3.88.8 ***Central Warm-Air, Gravity-Type Furnace with Booster Fan.*** A central furnace equipped with a booster fan that does not materially restrict free circulation of air by gravity flow when such a fan is not in operation.

3.3.88.9 ***Central Warm-Air, Gravity-Type Furnace with Integral Fan.*** A central furnace equipped with a fan as an integral part of its construction and operable on gravity systems only. The fan is used only to overcome the internal resistance to airflow.

3.3.88.10 ***Combination-Fuel Furnace.*** A single furnace unit designed to burn more than one type of fuel (gas, oil, or solid), either separately or simultaneously, using either separate or common combustion chambers and flues.

3.3.88.11 ***Duct Furnace.*** A central furnace designed for installation in a duct of an air distribution system to supply warm air for heating and that depends on a blower not furnished as part of the furnace for air circulation.

3.3.88.12 ***Floor Furnace.*** A self-contained indirect-fired or electrically heated furnace designed to be suspended from the floor of the space to be heated. A fuel-burning floor furnace is designed to take air for combustion from outside the space being heated and is provided with means for observing the flame and lighting the appliance from such space.

3.3.88.12.1 ***Fan-Type Floor Furnace.*** A floor furnace equipped with a blower that provides the primary means for circulation of air.

3.3.88.12.2 ***Gravity-Type Floor Furnace.*** A floor furnace depending primarily on circulation of air by gravity. This classification also includes floor furnaces equipped with booster-type fans that do not materially restrict free circulation of air by gravity flow when such fans are not in operation.

3.3.88.13 ***Supplementary Furnace.*** A furnace designed to burn one type of fuel (gas, oil, or solid) that is intended for supplementing a central warm-air furnace burning another type of fuel (gas, oil, or solid) by means of a common warm-air supply plenum.

3.3.88.14 ***Wall Furnace.*** A self-contained, vented appliance complete with grilles or equivalent, designed for incorporation in or permanent attachment to the structure of a building, manufactured home, or recreational vehicle, and furnishing heated air directly into the space to be heated through openings in the casing. Such appliances should not be provided with duct extensions beyond the vertical and horizontal limits of the casing proper, except that boots not exceeding 10 in. (254 mm) beyond the horizontal of the casing for extension through walls of nominal thickness can be used. Where provided, such boots should be supplied by the manufacturer as an integral part of the appliance. This definition excludes floor furnaces, unit heaters, and central furnaces.

3.3.88.14.1 ***Fan-Type Wall Furnace.*** A wall furnace equipped with a fan for the circulation of air.

3.3.88.14.2 ***Gravity-Type Wall Furnace.*** A wall furnace dependent on the circulation of air by gravity.

3.3.89* Gas Appliance Categories. Vented gas appliances are classified for venting purposes into four categories as follows: (1) Category I — An appliance that operates with a non-positive vent static pressure and with a vent gas temperature that avoids excessive condensate production in the vent; (2) Category II — An appliance that operates with a non-positive vent static pressure and with a vent gas temperature that may cause excessive condensate production in the vent; (3) Category III — An appliance that operates with a positive vent static pressure and with a vent gas temperature that avoids excessive condensate production in the vent; (4) Category IV — An appliance that operates with a positive vent static pressure and with a vent gas temperature that may cause excessive condensate production in the vent.

3.3.90 Gas Vent. See 3.3.159.1.

--`,,```,,,,````-`-`,,`,,`,`,,`---

Copyright National Fire Protection Association
Provided by IHS under license with NFPA
No reproduction or networking permitted without license from IHS
Not for Resale

3.3.91 Gases.

3.3.91.1 ***Flue Gases.*** Combustion products from fuel-burning appliances along with excess air.

3.3.91.2 ***Vent Gases.*** Products of combustion from fuel-burning appliances along with excess air, plus any dilution air in the venting system above a draft hood or draft regulator.

3.3.92 Gravity-Type Floor Furnace. See 3.3.88.12.2.

3.3.93 Gravity-Type Wall Furnace. See 3.3.88.14.2.

3.3.94 Header. Where referring to chimneys, a beam set at right angles to floor or roof joists to provide support and framing around the opening.

3.3.95 Hearth. The floor area within the fire chamber of a fireplace or a fireplace stove.

3.3.96 Hearth Extension. The noncombustible surfacing applied to the floor area extending in front of and at the sides of the hearth opening of a fireplace or a fireplace stove; also where applied to the floor area beneath a fireplace stove or beneath an elevated overhanging fireplace hearth.

3.3.97 Heat Exchanger. A chamber in which heat resulting directly from the combustion of fuel, or heat from a medium such as air, water, or steam, is transferred through the walls of the chamber to air passing through the exchanger; or a chamber in which heat from electric resistors is transferred to the air.

3.3.98 Heater.

3.3.98.1 ***Room Heater.*** A heating appliance intended for installation in the space being heated and not intended for duct connection.

3.3.98.1.1 ***Circulating Room Heater.*** A room heater with an outer jacket surrounding the heat exchanger, arranged with openings at top and bottom so that air circulates between the heat exchanger and the outer jacket. Room heaters that have openings in an outer jacket to allow some direct radiation from the heat exchanger are classified as a radiant type.

3.3.98.1.2 ***Radiant Room Heater.*** A room heater designed to transfer heat primarily by direct radiation.

3.3.98.1.3 ***Solid Fuel Room Heater.*** A chimney-connected, solid fuel-burning room heater that is designed to be operated with the fire chamber closed.

3.3.98.2 ***Unit Heater.*** A self-contained heating appliance that might or might not include an integral fan for circulating air and that can be of the floor-mounted or suspended type that is intended for the heating of the space in which it is installed. A unit heater can be an indirect-fired fuel-burning appliance or might utilize steam, hot water, or electricity.

3.3.98.3 ***Water Heater.*** A fuel-burning appliance for heating water to a temperature not more than 200°F (93°C).

3.3.99 Heat-Producing Appliance. See 3.3.3.7.

3.3.100 High-Pressure Boiler. See 3.3.15.2.

3.3.101 Hot Water Supply Boiler. See 3.3.15.3.

3.3.102 Incinerator. An appliance or combustion chamber for the reduction, by burning, of rubbish, garbage, and other wastes.

3.3.102.1 ***Chute-Fed Incinerator (Class IIA).*** An incinerator designed specifically to be fed refuse from one or more floors above the incinerator directly into the incinerator by a separate chute constructed with a positive means to avoid penetration by smoke or fumes and connected directly over the primary combustion chamber. The incinerator is built with a primary and secondary combustion chamber and a settling chamber. It can include a flue gas washer or scrubber. A separate chimney serves to convey the combustion gases to the outdoors. This class of incinerator is suitable for Type 1 and Type 2 wastes. It generally is used in residential and institutional buildings, including apartments, clubs, dormitories, churches, schools, and other occupancies where Type 1 and Type 2 wastes are to be incinerated.

3.3.102.2 ***Commercial-Industrial-Type Incinerator (Classes III, IV, V, VI, and VII).*** An incinerator having a charging capacity in excess of 5 ft^3 (0.142 m^3) and suitable for a variety of wastes as follows: (1) Class III — Waste Type 0, Type 1, or Type 2; (2) Class IV — Waste Type 3; (3) Class V — Waste Types 0–4 (municipal incinerators); (4) Class VI — Waste Type 4; (5) Class VII — Waste Types 5 and 6.

3.3.102.3 ***Flue-Fed Incinerator (Class II).*** An incinerator served by a single chimney flue that serves also as the charging chute, where refuse is fed directly to the incinerator through this chimney flue from one or more floors above the incinerator. This class of incinerator is suitable for Type 1 and Type 2 waste materials and garbage incidental to residential occupancy in single family and multifamily buildings. This class of incinerator is generally used in residential and institutional buildings, including apartments, clubs, dormitories, churches, schools, and other occupancies where Type 1 and Type 2 wastes are to be incinerated.

3.3.102.4 ***Residential-Type Incinerator.*** An incinerator for the burning of ordinary combustible waste material and garbage (Type 2 waste) incidental to residential occupancy and having a firebox or charging compartment not greater than 5 ft^3 (0.142 m^3) in capacity. Residential-type incinerators can be self-contained, factory-built units that do not necessitate field construction, or can be of a built-in type designed to be encased in masonry or installed in a masonry wall or chimney.

3.3.103 Low-Pressure Boiler. See 3.3.15.4.

3.3.104 Mantel. A shelf or facing ornament above a fireplace opening.

3.3.105 Manually Operated Damper. See 3.3.56.3.

3.3.106 Manufacturer. The person or persons, company, firm, corporation, partnership, or other organization responsible for turning raw materials or components into a finished product.

3.3.107 Masonry Chimney. See 3.3.32.5.

3.3.108 Masonry Fireplace. See 3.3.75.2.

3.3.109 Masonry Fireplace Lintel. The horizontal, noncombustible member, usually of masonry or steel, spanning the opening of a masonry fireplace to support the load above.

3.3.110 Material.

3.3.110.1 ***Combustible Material.*** Material made of or surfaced with wood, compressed paper, plant fibers, plastics, or other material that can ignite and burn, whether flameproofed or not, or whether plastered or unplastered.

Copyright National Fire Protection Association
Provided by IHS under license with NFPA
No reproduction or networking permitted without license from IHS
Not for Resale

3.3.110.2 ***Noncombustible Material.*** A material that, in the form in which it is used and under the conditions anticipated, will not ignite, burn, support combustion, or release flammable vapors when subjected to fire or heat. Materials that are reported as passing ASTM E 136, *Standard Test Method for Behavior of Materials in a Vertical Tube Furnace at 750°C*, shall be considered noncombustible materials.

3.3.111 Mechanical Draft. See 3.3.61.1.

3.3.112 Natural Draft. See 3.3.61.2.

3.3.113 Non-Accessible, Concealed (for Inspections). Not capable of being exposed for inspection, maintenance, or repair without damage to the chimney or building structure or finish, or without the use of special tools.

3.3.114 Noncombustible Material. See 3.3.110.2.

3.3.115 Nonresidential Appliance, 1400°F. See 3.3.3.8.

3.3.116 Nonresidential, High-Heat Appliance. See 3.3.3.9.

3.3.117 Nonresidential, Low-Heat Appliance. See 3.3.3.10.

3.3.118 Nonresidential, Medium-Heat Appliance. See 3.3.3.11.

3.3.119 Pellet Fuel. See 3.3.87.1.

3.3.120 Pellet Fuel–Burning Appliance. See 3.3.3.5.2.

3.3.121 Pellet Vent. See 3.3.159.2.

3.3.122 Qualified Agency. Any individual, firm, corporation, or company that, either in person or through a representative, is engaged in and is responsible for the connection, venting, installation, inspection, repair, or servicing of heat-producing appliances and who is experienced in such work, is familiar with all precautions required, and has complied with all the requirements of the AHJ.

3.3.123 Radiant Room Heater. See 3.3.98.1.2.

3.3.124 Range. An appliance intended primarily for cooking, including roasting, baking, or broiling or any combination of these functions.

3.3.124.1 ***Bungalow Utility-Type Range.*** A range having an additional section for gas, liquid, or solid fuel that is designed for space heating and heating a solid top section but not for oven heating.

3.3.124.2 ***Residential-Type Range.*** A range intended primarily for residential cooking purposes.

3.3.124.2.1 ***Built-in Residential-Type Range.*** A range designed to be recessed into, placed upon, or attached to counters, cabinets, walls, or partitions.

3.3.124.3 ***Restaurant-Type Range.*** A range of the type designed for use primarily in restaurant and hotel kitchens.

3.3.124.4 ***Room Heater-Type Range.*** A range having a separate room heater section.

3.3.125 Readily Accessible. See 3.3.1.1.

3.3.126 Residential-Type Heating Appliance. See 3.3.3.6.3.

3.3.127 Residential-Type Incinerator. See 3.3.102.4.

3.3.128 Residential-Type Range. See 3.3.124.2.

3.3.129 Restaurant-Type Range. See 3.3.124.3.

3.3.130 Roof Jack. A factory-built assembly for conveying flue gases through a roof and that includes a flue gas passageway, an insulating means, flashing, and a cap.

3.3.131 Room Heater. See 3.3.98.1.

3.3.132 Room Heater-Type Range. See 3.3.124.4.

3.3.133 Room Large in Comparison with the Size of the Appliance. A room having a volume equal to at least 12 times the total volume of a furnace and at least 16 times the total volume of a boiler. The total volume of the furnace or boiler is determined from the exterior dimensions and is to include a fan compartment and burner vestibule, where used. Where the actual ceiling height of a room is greater than 8 ft (2.44 m), the volume of the room is to be figured on the basis of a ceiling height of 8 ft (2.44 m).

3.3.134 Smoke Chamber. The transitional area from the damper opening to the beginning of the flue liner in a fireplace system.

3.3.135 Smoke Test. A procedure for ascertaining the tightness of a chimney and for detecting any cracks in a masonry chimney flue or deterioration or breaks in the integrity of a metal chimney flue, and that involves igniting a smoke bomb or building a smoky fire in a fireplace or solid fuel-burning appliance, covering the chimney termination, and checking for smoke escapage through the chimney walls.

3.3.136 Solid Fuel. See 3.3.87.2.

3.3.137 Solid Fuel Room Heater. See 3.3.98.1.3.

3.3.138 Solid Fuel–Burning Appliance. See 3.3.3.5.3.

3.3.139 Solid Masonry Construction. A bonded assembly of stones or solid masonry units.

3.3.140 Solid Masonry Unit. See 3.3.156.1.

3.3.141 Spark Arresters. Screening material or a screening device attached to a chimney termination to prevent the passage of sparks and brands to the outside atmosphere.

3.3.142 Special Gas Vent. See 3.3.159.1.1.

3.3.143 Splay. See 3.3.168, Wash.

3.3.144 Steel Fireplace Unit. See 3.3.156.2.

3.3.145 Supplementary Boiler. See 3.3.15.5.

3.3.146 Supplementary Furnace. See 3.3.88.13.

3.3.147 System.

3.3.147.1* ***Engineered Venting or Chimney System.*** A system that has been sized and configured in accordance with approved engineering methods.

3.3.147.2 ***Venting System (Flue Gases).*** A continuous, open passageway from the flue collar or draft hood of a fuel-burning appliance to the outside atmosphere for the purpose of removing flue gases.

3.3.148 Thimble. A fixed or removable ring, tube, or lining usually located in the hole where the chimney connector or vent connector passes through a wall or enters a chimney or vent.

3.3.149 Trimmer. Where referring to chimneys, the longer floor or roof framing member around a rectangular opening into which the end of a header is joined.

3.3.150 Type 1 Clothes Dryer. See 3.3.42.1

3.3.151 Type 2 Clothes Dryer. See 3.3.42.2.

3.3.152 Type B Gas Vent. See 3.3.159.1.2.

Copyright National Fire Protection Association
Provided by IHS under license with NFPA
No reproduction or networking permitted without license from IHS
Not for Resale

3.3.153 Type BW Gas Vent. See 3.3.159.1.3.

3.3.154 Type HT Factory-Built, Residential-Type and/or Building Heating Appliance Type Chimney. See 3.3.32.1.3.

3.3.155 Type L Vent. See 3.3.159.3.

3.3.156 Unit.

3.3.156.1 ***Solid Masonry Unit.*** A masonry unit whose net cross-sectional area in every plane parallel to the bearing surface is 75 percent or more of its gross cross-sectional area measured in the same plane.

3.3.156.2 ***Steel Fireplace Unit.*** A unit consisting of a steel firebox and an air chamber adjacent to the sides and rear of the firebox, used to construct a masonry fireplace. The unit usually has ducts to circulate air to and heated air from the air chamber to the living space.

3.3.157 Unit Heater. See 3.3.98.2.

3.3.158 Unlisted Metal (Smokestack) Chimney. See 3.3.32.6.

3.3.159* Vent. A flue gas-conveying system intended for use only with certain gas, liquid, or pellet fuel-fired appliances that do not produce flue gas outlet temperatures higher than a value specified in the listing vent standards.

3.3.159.1 ***Gas Vent.*** A passageway composed of listed factory-built components assembled in accordance with the terms of listing for conveying vent gases from gas appliances or their vent connectors to the outside atmosphere. [**54,** 2006]

3.3.159.1.1 ***Special Gas Vent.*** A gas vent for venting listed Category II, III, and IV gas appliances.

3.3.159.1.2 ***Type B Gas Vent.*** A vertical or nearly vertical gas vent for venting listed gas appliances with draft hoods and other Category I gas appliances listed for use with Type B gas vents.

3.3.159.1.3 ***Type BW Gas Vent.*** A vertical or nearly vertical gas vent for venting listed gas-fired vented wall furnaces.

3.3.159.2 ***Pellet Vent.*** A venting system composed of listed, factory-built components assembled in accordance with the manufacturer's instructions for conveying flue gases from a listed pellet fuel-burning appliance to the outside atmosphere.

3.3.159.3 ***Type L Vent.*** A vertical or nearly vertical vent composed of listed factory-built components assembled in accordance with the terms of listing for conveying flue gases from oil and gas appliances or their vent connectors to the outside atmosphere.

3.3.160 Vent Cap. See 3.3.22.2.

3.3.161 Vent Connector. See 3.3.52.2.

3.3.162 Vent Gases. See 3.3.91.2.

3.3.163 Vented Appliance. See 3.3.3.12.

3.3.164 Venting. Removal of combustion products as well as noxious or toxic fumes to the outside atmosphere.

3.3.165 Venting System (Flue Gases). See 3.3.147.2.

3.3.166 Wall Furnace. See 3.3.88.14.

3.3.167 Wall Protector (Shield). Noncombustible surfacing applied to a wall area for the purpose of reducing the clearance between the wall and a heat-producing appliance.

3.3.168 Wash. A slight slope or beveled edge on the top surface of a chimney designed to shed water away from the flue liner; also called a *splay.*

3.3.169 Water Heater. See 3.3.98.3.

3.3.170 Wythe. Where referring to masonry chimneys, a course, a thickness, or a continuous vertical section of masonry separating flues in a chimney.

Chapter 4 General Requirements

4.1* Sizing and Draft.

4.1.1 Minimum Performance. A chimney or vent shall be so designed and constructed to develop a flow sufficient to remove completely all flue or vent gases to the outside atmosphere.

4.1.1.1 Chimneys or vents shall be evaluated to ensure proper performance with respect to draft, creosote buildup, and condensation.

4.1.1.2 The venting system shall satisfy the draft requirements of the connected appliance(s) in accordance with the manufacturers' instructions or approved methods.

4.1.2 Mechanical Draft Systems. A listed mechanical draft system of either forced or induced draft design shall be permitted to be used to increase draft or capacity.

4.1.2.1 Where a mechanical draft system is installed, provision shall be made to prevent the flow of fuel to an automatically fired appliance(s) when that system is not operating.

4.1.2.2 The operation of a mechanical draft system shall not adversely affect the performance or safety of, or cause spillage of combustion products from, other combustion equipment operating within the same building.

4.1.2.3 Proper performance and safety of other combustion equipment shall be verified by testing prior to the mechanical draft system being put into service.

4.1.2.4 Such testing shall include operation of the mechanical draft system together with other exhaust equipment likely to operate simultaneously.

4.1.2.5 Mechanical draft systems of either forced or induced draft serving manually fired appliances shall be one of the following:

(1) A mechanical draft system that is an integral part of a listed appliance
(2) A solid fuel cooking appliance as addressed in NFPA 96, *Standard for Ventilation Control and Fire Protection of Commercial Cooking Operations*
(3)*An engineered mechanical draft system that includes the following provisions:
  (a) The following detection and warning devices shall be installed and line voltage devices, when installed, shall be provided with a battery backup system:
    i. A device that produces an audible and visible warning upon failure of the mechanical draft system. The device shall be activated by loss of electrical power supply or by operational failure of the mechanical draft system at any time while the mechanical draft system is switched on.

Copyright National Fire Protection Association
Provided by IHS under license with NFPA
No reproduction or networking permitted without license from IHS
Not for Resale

ii. A smoke detector and alarm installed and maintained in accordance with *NFPA 72, National Fire Alarm Code*. The detector shall be installed in the same room as the appliance served by the mechanical draft system.
iii. A listed carbon monoxide warning device installed in accordance with the manufacturer's instructions.

(b) The mechanical draft system shall be listed in accordance with UL 378, *Standard for Draft Equipment*, for use with the type of appliance and range of chimney service appropriate for the application. The mechanical draft system shall not cause or permit blockage of the flue or electrical hazard after exposure to a chimney fire or over fire conditions. The mechanical draft system shall be installed in accordance with the terms of the listing and the manufacturer's instructions.

(c) The mechanical draft system shall be sized to maintain draft within the range specified by the appliance manufacturer.

4.1.3 Natural Draft Sizing. Chimneys serving incinerators or other process equipment where the combustion process cannot be stopped completely by fuel shutoff alone shall be sized for natural draft conditions.

4.1.3.1 Where air pollution control devices or other devices in the chimney system require a mechanical draft system, the chimney system shall be so arranged that, upon a power failure, the natural draft chimney alone can satisfactorily remove the products of combustion until the combustible material is completely consumed.

4.1.4 Forced/Induced Draft Systems. Forced draft systems and all portions of induced draft systems under positive pressure during operation shall be designed and installed to be gastight or to prevent the leakage of combustion products into a building.

4.1.5 Natural Draft Vent Connectors. Vent connectors serving appliances vented by natural draft shall not be connected into any portion of mechanical draft systems operating under positive pressure.

4.2 Termination (Height). Chimneys and vents shall terminate above the roof level in accordance with the requirements of this standard and as illustrated in Figure 4.2(a) and Figure 4.2(b).

4.2.1 Masonry chimneys shall extend above the highest point at which they pass through the roof of a building by at least the distance specified in Table 7.2, Column VI, and shall also extend at least the specified distance above any portion of any structure within the specified proximity (measured horizontally from the vertical chimney line) in Table 7.2, Column VII.

4.2.2 Natural draft chimneys and vents shall not terminate at an elevation less than 5 ft (1.53 m) above the flue collar or the highest connected draft hood outlet.

Exception: As provided in Section 10.7.

4.3 Enclosure.

4.3.1 General. Interior residential chimneys shall be enclosed where they extend through closets, storage areas, or habitable spaces where the surface of the chimney could come into contact with persons or combustible materials.

4.3.2 Clearance. The space between the chimney and the enclosure shall be at least the minimum air space clearance specified in this standard *(see Table 7.2)* or the clearance specified in the manufacturer's instructions for listed chimneys.

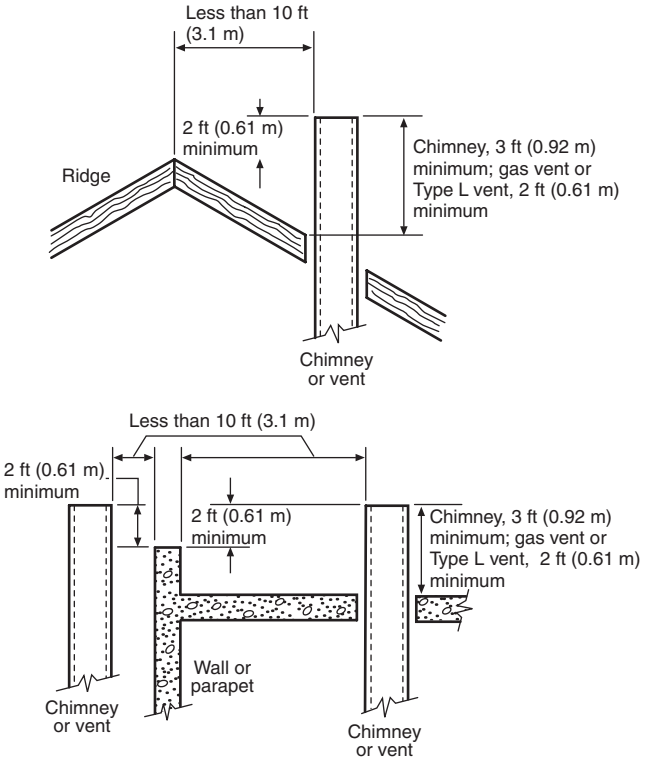

FIGURE 4.2(a) Chimney or Vent Termination Less Than 10 ft (3.1 m) from Ridge, Wall, or Parapet.

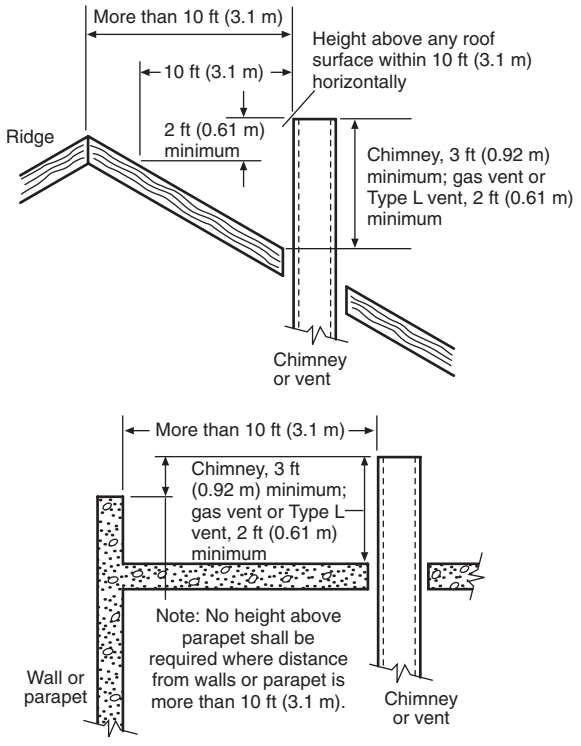

FIGURE 4.2(b) Chimney or Vent Termination More Than 10 ft (3.1 m) from Ridge, Wall, or Parapet.

Copyright National Fire Protection Association
Provided by IHS under license with NFPA
No reproduction or networking permitted without license from IHS
Not for Resale

4.4 Venting Systems in Ducts.

4.4.1 Circulating Air Ducts and Plenums. No portion of a venting system shall extend into or pass through a dedicated circulating air duct or plenum.

4.4.2 Above-Ceiling Spaces. Where a venting system passes through a space above a ceiling used as a return air plenum, it shall be installed according to one of the following methods:

(1) With joints within the above-ceiling return air plenum sealed airtight in a manner approved by the manufacturer of the venting system
(2) As a listed positive-pressure venting system
(3) Non-airtight venting system installed with no joints or fittings located within the above-ceiling return air plenum

4.5 Flue Lining.

4.5.1 Resistance Equivalency. Castable or plastic refractories used to line chimneys or connectors shall be the equivalent in resistance to heat and erosion by flue gases to that of the fireclay brick.

4.5.2 Lining Support. Lining made of castable or plastic refractories shall be secured to the supporting walls by anchors made of corrosion-resistant steel capable of supporting the refractory load at 1500°F (816°C).

4.5.3 Space Surrounding Liner or Vent. The remaining space surrounding a chimney liner, gas vent, special gas vent, or plastic piping installed within a chimney flue shall not be used to vent another appliance.

4.6 Caps and Spark Arresters for Chimneys and Vents.

4.6.1 Design. Chimney or vent caps, where required for the termination of chimneys or vents, shall be designed to prevent the entry of rain, snow, birds, and other animals.

4.6.2 Screening. Screening material attached to chimney or vent caps to prevent the entry of animals and insects shall not adversely affect the chimney or vent draft.

4.6.3 Spark Arresters.

4.6.3.1 Spark arresters, where required by the AHJ for chimneys attached to solid fuel–burning equipment, shall meet the following requirements:

(1) The net free area of the arrester shall be not less than three times the net free area of the outlet of the chimney flue it serves.
(2) The arrester screen shall have heat and corrosion resistance equivalent to 19 gauge [0.041 in. (1.04 mm)] galvanized steel or 24 gauge [0.024 in. (0.61 mm)] stainless steel.
(3) Openings shall not allow the passage of spheres having a diameter larger than ½ in. (12.7 mm) or block the passage of spheres having a diameter of less than ⅜ in. (9.5 mm).
(4) The spark screen shall be accessible for cleaning, and the screen or chimney cap shall be removable to allow cleaning of the chimney flue.

4.6.3.2 Where part of a listed chimney termination system, spark arresters shall be constructed and installed in accordance with the listing.

Chapter 5 Selection of Chimney and Vent Types

5.1 Chimney Types.

5.1.1 Selection. Chimney selection shall be limited to three basic chimney types: factory-built, masonry, and unlisted metal *[see Figure 5.1.1(a) through Figure 5.1.1(c)]*.

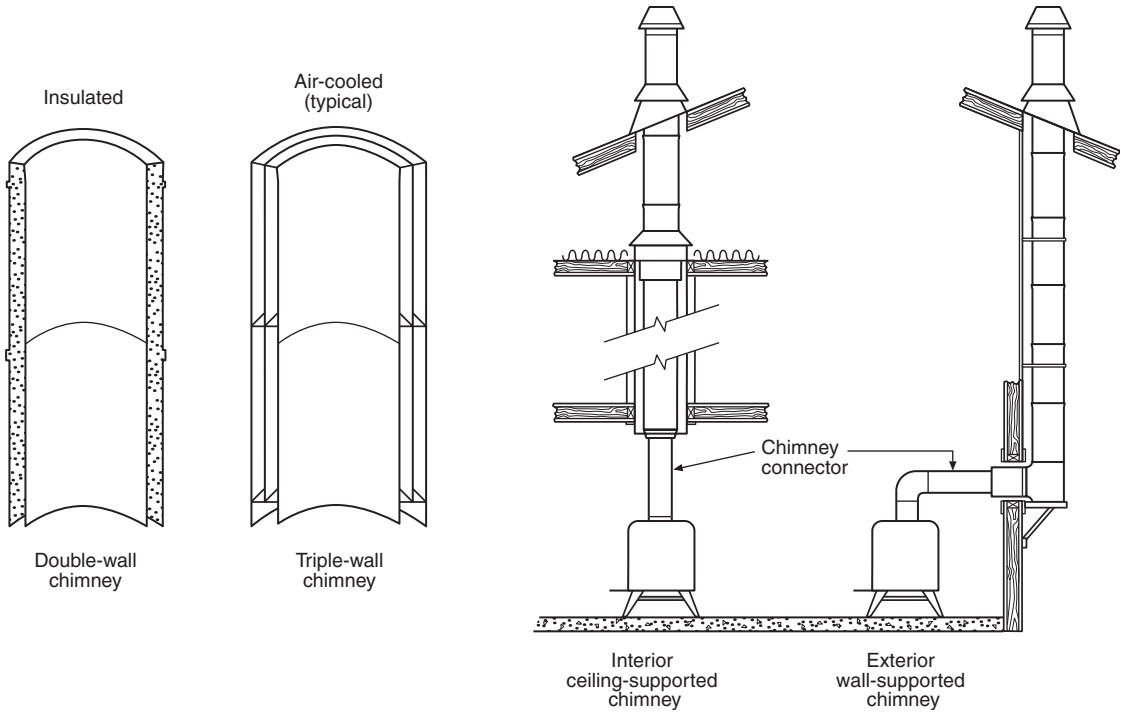

FIGURE 5.1.1(a) Typical Factory-Built Chimney Installation in a Single-Family Residence.

Copyright National Fire Protection Association
Provided by IHS under license with NFPA
No reproduction or networking permitted without license from IHS
Not for Resale

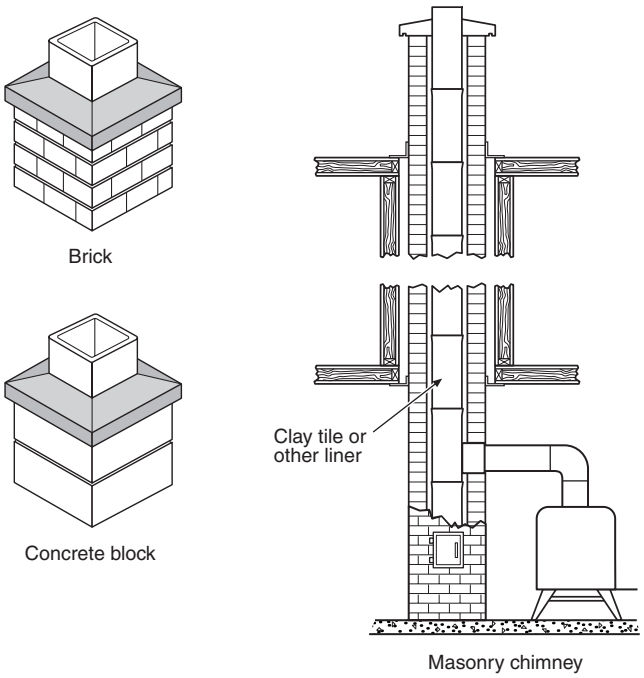

FIGURE 5.1.1(b) Masonry Chimney.

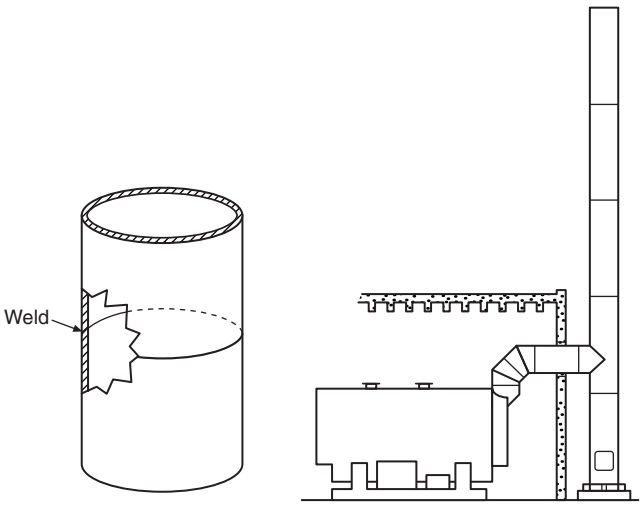

FIGURE 5.1.1(c) Typical Unlisted Metal Chimney Installation in a Commercial or Industrial Application.

5.1.2 Application. Each basic chimney type is defined in Chapter 3, and the application of each is determined by Table 5.2.2.1, with specific construction or installation requirements in Chapters 6, 7, and 8.

5.2 Chimney or Vent Selection.

5.2.1 General. The selection of a chimney or vent shall be based on the following:

(1) Type of appliance connected thereto
(2) Fuel used by the appliance
(3) Temperature of the flue gases at the appliance outlet
(4) Pressure within the chimney or vent

5.2.2 Chimneys.

5.2.2.1 The chimney type shall be selected according to Table 5.2.2.1.

5.2.2.2 Unlisted metal chimneys shall not be installed in one- and two-family dwellings.

5.2.3 Vents.

5.2.3.1 A vent shall be used only where appliances are listed for use with a vent.

5.2.3.2 The vent type shall be selected according to Table 5.2.3.2.

Chapter 6 Factory-Built Chimneys and Chimney Units

6.1 Type and Installation.

6.1.1 General. Factory-built chimneys and chimney units shall be listed and installed in accordance with the temperature and pressure conditions of the listing and the manufacturer's instructions.

6.1.2 Temperature and Pressure Limits. Flue gas temperatures and static pressures within the chimney shall not exceed the limits employed during listing tests.

6.1.3 Listing Requirements.

6.1.3.1 Factory-built chimneys shall comply with the requirements of UL 103, *Standard for Factory-Built Chimneys for Residential Type and Building Heating Appliance*; CAN/ULC-S629-M87, *Standard for 650°C Factory-Built Chimney*; or UL 959, *Standard for Medium Heat Factory-Built Appliance Chimneys*.

6.1.3.2* Factory-built chimneys for use with wood-burning appliances shall comply with the Type HT requirements of UL 103, *Standard for Factory-Built Chimneys for Residential Type and Building Heating Appliance*, or the requirements of CAN/ULC-S629-M87, *Standard for 650°C Factory-Built Chimney*.

6.1.3.3 Chimneys for factory-built fireplaces shall meet the requirements of UL 127, *Standard for Factory-Built Fireplaces*.

6.1.3.4 Engineered appliance-venting systems that have been listed to operate without producing combustible deposits to the venting system shall be installed in accordance with the conditions of their listing and the manufacturer's instructions.

6.1.3.5 Open-front masonry fireplaces shall be permitted to use listed residential-type and building heating appliance chimneys without the Type HT designation.

6.1.4 Enclosures. Factory-built chimneys that pass through floors of buildings requiring the protection of vertical openings shall be enclosed with approved walls having a fire resistance rating of not less than 1 hour where such chimneys are located in a building less than four stories in height and not less than 2 hours where such chimneys are located in a building four or more stories in height.

6.1.5 Decorative Shrouds. Unlisted decorative shrouds shall not be permitted at the termination of a factory-built chimney.

--`,,```,,,,````-`-`,,`,,`,`,,`---
Copyright National Fire Protection Association
Provided by IHS under license with NFPA
No reproduction or networking permitted without license from IHS
Not for Resale

Table 5.2.2.1 Chimney Selection Based on Appliance Type and Flue Gas Temperature

Column I	Column II	Column III	Column IV	Column V
Types of Appliances to Be Used with Each Chimney Type				
Residential-type gas, liquid, and solid fuel–burning applications such as: All appliances shown in Column I of Table 5.2.3.2 Dual-fuel furnaces Fireplace inserts Fireplace stoves Fireplace stove room heaters Freestanding fireplaces Boilers Masonry fireplaces Pellet fuel–burning appliances[a] Ranges Residential incinerators Room heaters Stoves	All appliances shown in Column I Boilers operating at not over 1000°F (538°C) flue gas temperature Low-heat nonresidential appliances Building heating appliance	All appliances shown in Columns I and II 1400°F (760°C) nonresidential appliances	All appliances shown in Columns I, II, and III Medium-heat nonresidential appliances	All appliances shown in Columns I, II, III, and IV High-heat nonresidential appliances
Chimney Type Based on Maximum Continuous Appliance Outlet Flue Gas Temperature Under Normal Operating Conditions				
1000°F (538°C)	**1000°F (538°C)**	**1400°F (760°C)**	**1800°F (982°C)**	**>1800°F (>982°C)**
Factory-built residential-type and building heating appliance[b] *(see Chapter 6)* Masonry, residential type *(see Chapter 7)*	Factory-built residential-type and building heating appliance[b] *(see Chapter 6)* Factory-built building heating appliance[b] *(see Chapter 6)* Masonry, low-heat type *(see Chapter 7)* Unlisted metal low-heat type[c] *(see Chapter 8)*	Factory-built 1400°F *(see Chapter 6)* Masonry, low-heat type *(see Chapter 7)* Unlisted metal 1400°F type[c] *(see Chapter 8)*	Factory-built medium-heat appliance *(see Chapter 6)* Masonry, medium-heat type *(see Chapter 7)* Unlisted metal medium-heat type[c] *(see Chapter 8)*	Engineered high-heat type *(see Section 6.2 and A.3.3.147.1)* Masonry, high-heat type *(see Chapter 7)* Unlisted metal high-heat type[c] *(see Chapter 8)*

[a] See also Table 5.2.3.2, Column VI.
[b] See 6.1.3 for requirements for factory-built chimneys used with wood-burning appliances in one- and two-family dwellings.
[c] See 8.1.1 for single-wall chimneys or unlisted metal chimneys for prohibition inside or outside one- and two-family dwellings.

6.2 Use. Factory-built chimneys shall be permitted to be used for exhaust systems and ducting from hoods, industrial ovens, furnaces, and process equipment of any temperature classification *(see Table 5.2.2.1)*, provided the system is engineered so that gas temperatures and pressures do not exceed the applicable limit for the type of chimney.

6.3* Sizing. Factory-built chimneys shall be sized and configured in accordance with the appliance and chimney manufacturers' instructions or approved methods.

Chapter 7 Masonry Chimneys

7.1 General Requirements.

7.1.1 Support.

7.1.1.1 Masonry chimneys shall be supported on properly designed foundations of masonry or reinforced portland or refractory cement concrete or on noncombustible material having a fire resistance rating of not less than 3 hours.

7.1.1.2 Such supports shall be independent of the building construction, and the load shall be transferred to the ground.

7.1.2 Corbeling. Individual and maximum projections of corbels in masonry chimneys shall comply with the requirements of this section. *[See Figure 7.1.2(a) through Figure 7.1.2(d).]*

7.1.2.1 Corbeling limitations shall be permitted to be varied for engineered reinforced brick masonry construction.

7.1.2.2 Individual corbels occurring at any point within a masonry chimney shall not exceed one-half the individual masonry unit height or one-third the thickness.

7.1.2.3 The following shall apply to masonry chimney supports:

(1) They shall be permitted to be formed by corbeling from a wall that is not less than 12 in. (305 mm) in thickness to form a maximum total projection of not more than one-half the wall thickness.
(2) Where the corbeling specified in 7.1.2.3(1) projects equally on each side of the wall, the masonry chimney support shall be permitted to be formed by corbeling from a wall that is not less than 8 in. (203 mm) in thickness to form a maximum total projection on each side of the wall that is not more than one-half the wall thickness.

Copyright National Fire Protection Association
Provided by IHS under license with NFPA
No reproduction or networking permitted without license from IHS
Not for Resale

Table 5.2.3.2 Vent Selection

Types of Appliances to Be Used with Each Type Vent					
Column I	**Column II**	**Column III**	**Column IV**	**Column V**	**Column VI**
All listed gas appliances with draft hoods and other Category I gas appliances listed for use with Type B vents, such as: Central furnaces Duct furnaces Floor furnaces Heating boilers Ranges, residential and low-heat gas Built-in ovens Vented wall furnaces Room heaters Water heaters Horizontal furnaces Unit heaters Decorative appliances (gas fireplaces)	Vented wall furnaces listed for use with Type BW vents only	Listed Categories II, III, and IV gas appliances and Category I appliances listed for use with Special Gas Vents	Low-temperature flue gas appliances listed for use with Type L vents Gas appliances shown under Column I	Incinerators used outdoors, in open sheds, breezeways, or carports as provided in Section 8.2 Gas appliances shown under Column I Listed residential and low-heat gas appliances without draft hoods and unlisted residential and low-heat gas appliances with or without draft hoods	Listed pellet-burning appliances listed for use with pellet vents
Vent Type					
Listed Type B Gas Vent	**Listed Type BW Gas Vent**	**Listed Special Gas Vent**	**Listed Type L Vent**	**Unlisted Single-Wall Metal Pipe***	**Listed Pellet Vent**

Note: See Chapter 10 for requirements.
*See 10.6.4 for limitations on unlisted single-wall metal pipe.

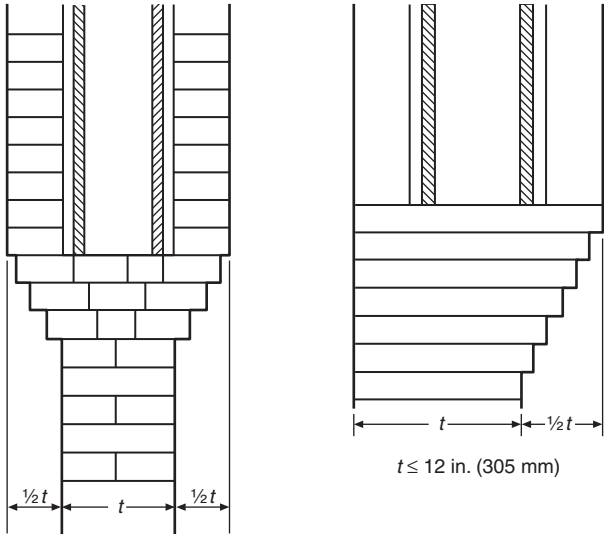

FIGURE 7.1.2(a) Corbels for Supporting Chimneys.

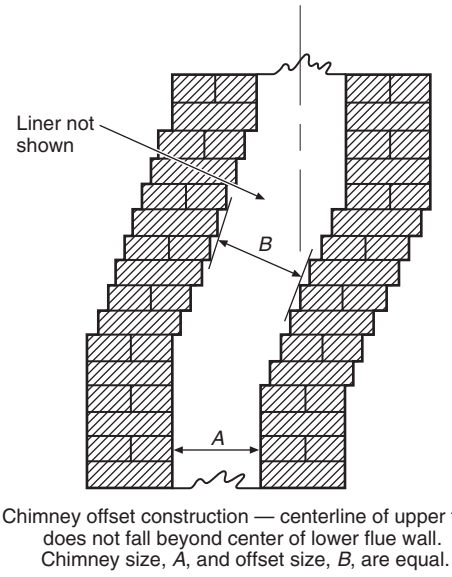

FIGURE 7.1.2(b) Corbels to Change Chimney Direction.

7.1.2.4 Corbeling used to change the direction of a masonry chimney shall have a maximum offset so that the centerline of the upper flue does not fall beyond the center of the lower flue wall. The cross-sectional area of the flue shall not be reduced throughout the offset.

7.1.2.5 Corbeling used to increase the chimney wall thickness shall have a maximum total projection that does not exceed the thickness of the chimney wall.

7.1.2.6 Corbeled or solid masonry shall be provided in masonry chimneys to support the entire perimeter of flue liners.

Copyright National Fire Protection Association
Provided by IHS under license with NFPA
No reproduction or networking permitted without license from IHS
Not for Resale

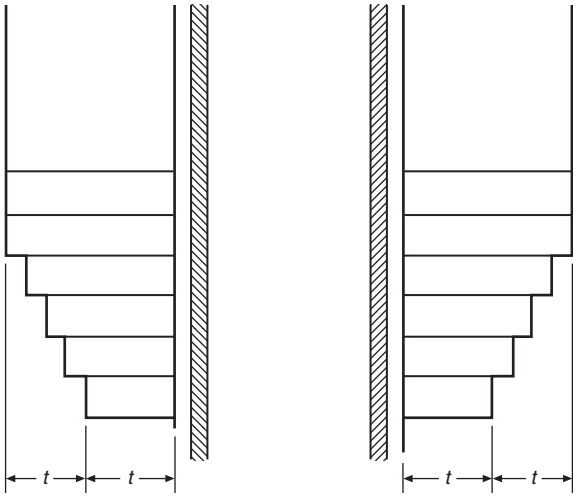

Note: t = masonry unit thickness.

FIGURE 7.1.2(c) Corbels to Increase Chimney Wall Thickness.

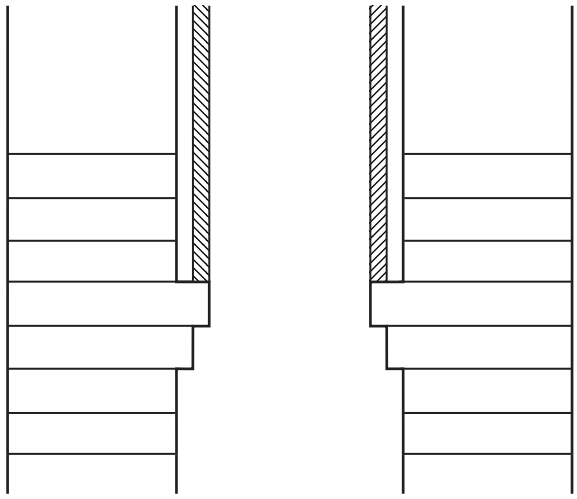

FIGURE 7.1.2(d) Corbels to Support Flue Lining.

7.1.2.7 Where a flue is constructed of two flue liners without a separation, three sides of each flue liner shall be supported entirely on corbeled masonry.

7.1.2.8 Corbels shall be made with solid units, and, where corbels are located on the walls of hollow masonry units, there shall be no fewer than three courses of solid masonry units below the corbels.

7.1.3 Change in Size or Shape of Flue at Combustible Members. A chimney flue shall not change in size or shape within 6 in. (152 mm) above or below any point where the chimney passes through combustible floor, ceiling, or roof components.

7.1.4 Cleanout Openings.

7.1.4.1 Cleanout openings shall be provided in all chimney flues serving freestanding appliances.

7.1.4.2 Cleanout openings shall be equipped with ferrous metal, stainless steel, precast cement, or other approved noncombustible doors and frames arranged to remain tightly closed and secured when not in use.

7.1.4.3 The lower edge of a cleanout opening inside a building shall be a minimum of 16 in. (406 mm) above the lowest accessible floor level.

7.1.4.4 The lower edge of a cleanout opening located outside a building shall be a minimum of 16 in. (406 mm) above grade, provided the cleanout opening is below the lowest chimney connector entrance.

7.1.4.5 Cleanout openings and doors shall not be obstructed. Combustible material located or projected beyond the face of the chimney shall be kept a minimum of 18 in. (457 mm) away from the cleanout opening.

7.1.4.6 Cleanout doors shall be permanently marked with a message equivalent to the following:

WARNING: DO NOT OBSTRUCT.
KEEP COMBUSTIBLE MATERIAL AT LEAST
18 in. (457 mm) AWAY FROM THIS DOOR.

7.1.4.7 Listed cleanout doors shall be installed in accordance with the terms of their listing and the manufacturer's instructions.

7.1.5 Chimney Flue.

7.1.5.1 The base of the chimney flue shall start at a point at least 6 in. (152 mm) but not more than 12 in. (305 mm) below the bottom edge of the cleanout door opening.

7.1.5.2 Any space within the chimney below the level of the flue base shall be filled with noncombustible masonry material, mortar, concrete, or sand and topped with a wash or a cap that prevents the entry of moisture or creosote.

7.1.6 Firestopping.

7.1.6.1 Gaps between firestopping and the chimney shall not exceed 1/16 in. (1.6 mm).

7.1.6.2 All spaces between chimneys and the floors and ceilings through which the chimneys pass shall remain fully open but shall be firestopped with noncombustible material.

7.1.6.3 The firestopping of spaces between chimneys and wood joists, beams, or headers shall be of galvanized steel not less than 26 gauge [0.019 in. (0.483 mm)] thick or of noncombustible sheet material not more than ½ in. (12.7 mm) thick.

7.1.7 Smoke Test. Masonry chimneys shall be proved tight by a smoke test after erection and before being put into use.

7.1.8 Structural Design.

7.1.8.1 Chimneys shall be designed, anchored, supported, and reinforced as required in this standard.

7.1.8.2 A chimney shall not support any structural load other than its own weight, unless designed to act as a supporting member.

7.1.8.3 Seismic Reinforcing.

7.1.8.3.1 In Seismic Design Category A, B, or C, reinforcement is not required.

7.1.8.3.2 In structures of Seismic Design Category D, fireplaces with chimneys up to 40 in. (1016 mm) wide, four No. 4 continuous vertical bars, anchored in the foundation, shall be placed in the concrete, between wythes of solid masonry or within the cells

Copyright National Fire Protection Association
Provided by IHS under license with NFPA
No reproduction or networking permitted without license from IHS
Not for Resale

of hollow unit masonry and grouted in accordance with ASTM C 476, *Standard Specification for Grout for Masonry.*

7.1.8.3.2.1 For fireplaces with chimneys greater than 40 in. (1016 mm) wide, two additional No. 4 vertical bars shall be provided for each additional 40 in. (1016 mm) in width or fraction thereof.

7.1.8.3.2.2 Vertical reinforcement shall be placed enclosed within ¼ in. (6.4 mm) ties or other reinforcing of equivalent net cross-sectional area, spaced not to exceed 18 in. (457 mm) on center in concrete, or placed in the bed joints of unit masonry at a minimum of every 18 in. (457 mm) of vertical height.

7.1.8.3.2.3 Two such ties shall be provided at each bend in the vertical bars.

7.1.8.3.3 In structures of Seismic Design Category E or F, masonry and concrete chimneys shall be reinforced in accordance with the requirements of Sections 43.1 through 43.8 of *NFPA 5000, Building Construction and Safety Code.*

7.1.8.4 Seismic Anchorage.

7.1.8.4.1 In Seismic Design Category A, B, or C, seismic anchorage is not required.

7.1.8.4.2 In structures of Seismic Category D, masonry and concrete chimneys shall be anchored at each floor, ceiling, or roof line more than 6 ft (1.8 m) above grade except where constructed completely within the exterior walls.

7.1.8.4.3 Two 3⁄16 in. by 1 in. (4.8 mm by 25.4 mm) straps shall be embedded a minimum of 12 in. (305 mm) into the chimney.

7.1.8.4.3.1 Straps shall be hooked around the outer bars and extend 6 in. (152 mm) beyond the bend.

7.1.8.4.3.2 Each strap shall be fastened to a minimum of four floor joists with two ½ in. (12.7 mm) bolts.

7.1.8.5 Chimney design shall consider seismic and wind loading.

7.1.8.6 Masonry chimneys shall be permitted to be constructed as part of the masonry or reinforced concrete walls of buildings.

7.1.9 Thimbles.

7.1.9.1 Thimbles for chimneys or vent connectors shall be of fireclay (ASTM C 315, *Standard Specification for Clay Flue Linings*), galvanized steel of a minimum thickness of 24 gauge [0.024 in. (0.61 mm)], or material of equivalent durability.

7.1.9.2 Thimbles shall be installed without damage to the liner.

7.1.9.3 The thimble shall extend through the wall to, but not beyond, the inner face of the liner and shall be cemented firmly to masonry.

7.1.9.4 Thimbles shall be located to provide pitch or rise of chimney or vent connectors.

7.1.9.5 Where the ceiling above the appliance is constructed of combustible material, the location of the thimble shall provide the minimum clearance required for the connector as specified in Section 9.5.

7.1.9.6 The installation of thimbles through walls or partitions constructed of combustible materials shall conform with the requirements of Section 9.7.

7.1.10 Relining.

7.1.10.1 Where masonry chimneys are relined, the liner shall be listed or of approved material that resists corrosion, softening, or cracking from flue gases at temperatures appropriate to the class of chimney service.

7.1.10.2 Listed liner systems shall be installed in accordance with the listing.

7.1.10.3 Approved materials shall be installed in accordance with Section 7.2.

7.1.10.4 The relined chimney shall meet the requirements of the class of chimney service.

7.1.11* Sizing.

7.1.11.1 Masonry chimneys serving appliances shall be sized and configured in accordance with the appliance manufacturers' instructions, 12.4.4, or approved methods.

7.1.11.2 Masonry chimneys serving fireplaces shall be sized in accordance with the requirements of *ASHRAE Handbook: HVAC Systems and Equipment* or other approved methods.

7.1.11.3 Masonry chimneys serving fireplaces that are a minimum of 8 ft (2.44 m) in height above the top of the fireplace opening and are constructed with no offsets in the flue shall be permitted to be designed in accordance with 7.1.11.3.1 through 7.1.11.3.4.

7.1.11.3.1 Round chimney flues shall have a minimum net cross-sectional area of at least one-twelfth the fireplace opening.

7.1.11.3.2 Square chimney flues shall have a minimum net cross-sectional area of at least one-tenth the fireplace opening.

7.1.11.3.3 Rectangular chimney flues with an aspect ratio of less than 2 to 1 shall have a minimum net cross-sectional area of at least one-tenth the fireplace opening.

7.1.11.3.4 Rectangular chimney flues with an aspect ratio of 2 to 1 or more shall have a minimum net cross-sectional area of at least one-eighth the fireplace opening.

7.1.12* Positive-Pressure Applications. Masonry chimneys used for positive internal pressure applications shall incorporate a lining system either listed for positive internal pressure applications or otherwise approved for such use.

7.2 Construction of Masonry Chimneys. Masonry chimneys shall be constructed as detailed in this section and Table 7.2.

7.2.1 Construction.

7.2.1.1 Masonry chimneys shall be constructed of one of the following and shall be laid with full, push-filled, head, and bed mortar joints:

(1) Solid masonry or solid, waterproofed, modular concrete blocks in nominal thicknesses not less than those specified in Table 7.2, Column I
(2) Reinforced portland or refractory cement concrete in actual thicknesses not less than those specified in Table 7.2, Column I
(3) Rubble stone masonry in actual thicknesses not less than those specified in Table 7.2, Column II

7.2.1.2 Reinforced masonry chimneys for residential-type appliances shall be permitted to be constructed of hollow masonry units not less than 6 in. (152 mm) nominal thickness, with cells fully filled with mortar.

--`,,```,,,,````-`-`,,`,,`,`,,`---

Copyright National Fire Protection Association
Provided by IHS under license with NFPA
No reproduction or networking permitted without license from IHS
Not for Resale

Table 7.2 Construction, Termination, and Clearances for Masonry Chimneys

	Column															
	I		II		III	IV		V	VI		VII		VIII		IX	
	Chimney Wall Thickness				Chimney Liner *(See 7.2.2.3.)*				Termination				Minimum Air Space Clearances *(See 7.2.2.3.)*			
	Brick or Concrete		Rubble Stone			Thickness			Highest Point		Nearby Structures		Interior Chimney		Exterior Chimney	
Chimney Type	in.	mm	in.	mm	Type	in.	mm	Cement	ft	m	ft	m	in.	mm	in.	mm
Residential	4	102	12	305	Fireclay	5/8	16	Medium duty	3	0.91	2 within 10	0.61 3.05	2	51	1	25
Low-heat	8	203	12	305	Fireclay	5/8	16	Medium duty	3	0.91	2 within 10	0.61 3.05	2	51	2	51
Medium-heat	8	203	12	305	Fireclay brick	4½	114	Medium duty	10	3.05	10 within 25	3.05 7.6	4	102	4	102
High-heat	See 7.2.1.3.				Fireclay brick	4½	114	High duty	20	6.1	20 within 50	6.1 15.2	See 7.3.1.5.			

7.2.1.3 Masonry chimneys for high-heat appliances shall meet the following criteria:

(1) They shall be constructed with double walls of solid masonry or reinforced portland or refractory cement concrete.
(2) Each double wall shall be not less than 8 in. (203 mm) thick with an air space of not less than 2 in. (51 mm) between walls.

7.2.2 Chimney Lining.

7.2.2.1 Masonry chimneys shall be lined.

7.2.2.2 The selection of the lining material shall be appropriate for the class of chimney service and the type of appliance connected in accordance with the terms of the appliance listing and the manufacturer's instructions.

7.2.2.3 Listed materials used as chimney linings shall be installed in accordance with the terms of their listings and the manufacturer's instructions.

7.2.2.4 The materials specified in 7.2.3 through 7.2.8 shall be permitted for the indicated class of chimney service.

7.2.3 Low-, Medium-, and High-Heat Appliances. The following materials shall be permitted for low-, medium-, and high-heat appliances (Table 5.2.2.1, Columns II, III, IV, and V):

(1) Clay flue lining complying with the requirements of ASTM C 315, *Standard Specification for Clay Flue Linings*, or the equivalent, as specified in Table 7.2, Columns III and IV
(2) Fireclay brick complying with the requirements of ASTM C 27, *Standard Classification of Fireclay and High-Alumina Refractory Brick*, or the equivalent, as specified in Table 7.2, Columns III and IV

7.2.4 Residential-Type and Building Heating Appliances. The following materials shall be permitted for residential-type and building heating appliances (Table 5.2.2.1, Columns I and II):

(1) Clay flue lining or fireclay brick complying with 7.2.3, as specified in Table 7.2, Columns III and IV
(2) Listed chimney lining systems
(3) Factory-built chimneys or chimney units listed for installation within masonry chimneys
(4) Other approved materials that resist corrosion, erosion, softening, or cracking from flue gases and condensate at temperatures up to 1800°F (982°C)

7.2.5 Category I Gas Appliances. The following materials shall be permitted for Category I gas appliances (Table 5.2.3.2, Column I):

(1) Chimney liners complying with 7.2.4
(2) Chimney lining systems listed for use with listed gas appliances with draft hoods and other Category I appliances listed for use with Type B vents *(See 7.2.9 for marking.)*
(3) Type B vents listed for installation within masonry chimneys *(See 7.2.9 for marking.)*

7.2.6 Categories II, III, and IV Gas Appliances. Special gas vents listed for installation within masonry chimneys shall be permitted (Table 5.2.3.2, Column III). *(See 7.2.9 for marking.)*

7.2.7 Pellet Fuel–Burning Appliances. The following materials shall be permitted for pellet fuel–burning appliances (Table 5.2.3.2, Column VI):

(1) Chimney liners complying with 7.2.4
(2) Pellet vents listed for installation within masonry chimneys *(See 7.2.9 for marking.)*

Copyright National Fire Protection Association
Provided by IHS under license with NFPA
No reproduction or networking permitted without license from IHS
Not for Resale

7.2.8 Listed or Approved Materials. Other materials listed for installation within masonry chimneys for the class of chimney service and for the appliance type shall be permitted. Other approved materials that resist corrosion, erosion, softening, or cracking from flue gases and condensate at temperatures appropriate for the class of chimney service and appliance type shall be permitted.

7.2.9 Notice of Usage.

7.2.9.1 Where a Type B gas vent, special gas vent, pellet vent, or other material not suitable for use under Columns I and II of Table 5.2.2.1 is used as a liner for a masonry chimney, the chimney shall be plainly and permanently identified by a label attached to the wall or ceiling or at another conspicuous location adjacent to the point where the connector enters the chimney.

7.2.9.2 The label shall read as follows or the equivalent: "This [*type of product*] is for [*type or category of appliance*] Appliances that Burn [*type of fuel*] Only. Do Not Connect Other Types of Appliances."

7.2.10 Fireclay Flue Liners.

7.2.10.1 Fireclay flue liners shall be installed ahead of the construction of the chimney as it is carried up.

7.2.10.2 Liners shall be bedded one on the other in a medium-duty, non-water-soluble calcium aluminate refractory cement mixture, or its equivalent.

7.2.10.3 Joints shall be left smooth on the inside.

7.2.10.4 Portland cement–bonded mixtures shall not be used.

7.2.11 Fireclay Brick Flue Liners. Fireclay brick flue liners shall be installed laid in full-width refractory mortar as specified in Table 7.2, Column V, or the equivalent.

7.2.12 Fireclay Flue Lining for Residential and Low-Heat Masonry Chimneys.

7.2.12.1 Fireclay flue lining for residential and low-heat masonry chimneys shall be separated from the chimney wall by a minimum of ½ in. (12.7 mm) and a maximum of 4 in. (102 mm) of air space.

7.2.12.2 The air space shall not be filled, and only enough mortar to make a good joint and hold the liners in position shall be used.

7.2.12.3 Where masonry chimneys are lined with a listed chimney liner system, the system shall be installed in accordance with the listing.

7.2.13 Installation of Fireclay Flue Liners.

7.2.13.1 The fireclay flue liner shall start at or below the base of the chimney flue and shall be supported by solid masonry.

7.2.13.2 The lining shall be carried up as nearly vertically as possible, with a maximum slope no greater than 30 degrees from the vertical.

7.2.13.3 The lining shall extend for the entire height of the chimney to a level not less than 2 in. (51 mm) above the crown, splay, or wash.

7.2.13.4 The crown, splay, or wash shall be constructed to allow for unrestricted vertical movement of the flue lining due to thermal expansion without allowing the introduction of moisture into the chimney.

7.2.14 Multiple Flues.

7.2.14.1 Where a chimney contains more than one flue, a separation shall be provided between adjacent flues.

7.2.14.2 The separation shall be of solid masonry wythes (partitions) bonded or securely tied to the chimney walls and constructed according to one of the following:

(1) Not less than 4 in. (102 mm), nominal, in thickness
(2) Of reinforced portland or refractory cement concrete not less than 4 in. (102 mm), actual, in thickness

7.2.14.3 Where two flues are used to vent a single fireplace or appliance, the provisions of 7.2.14.1 shall not be required.

7.2.14.4 Multiple flues in one chimney shall not be permitted for medium-heat appliances, high-heat appliances, or commercial and industrial incinerators.

7.2.14.5 For chimney liners that have been listed for use as multiple flues installed in accordance with the terms of the listing, the provisions of 7.2.14.1 shall not be required.

7.3 Clearance from Combustible Material.

7.3.1 Minimum Air Space.

7.3.1.1 The minimum air space clearance between interior masonry chimneys (where any portion of the chimney is located within the exterior wall of the building) and combustible materials shall be at least the distance specified in Table 7.2, Column VIII.

7.3.1.2 The minimum air space clearance between exterior masonry chimneys (where the chimney is located completely outside the exterior wall of the building, excluding the soffit or cornice area) and combustible material shall be at least the distance specified in Table 7.2, Column IX.

7.3.1.3* The air space shall not be filled.

7.3.1.4 For residential and low-heat chimneys, noncombustible trim shall be permitted to be used to prevent the entry of debris into the air space.

7.3.1.5 Masonry chimneys for high-heat appliances shall have clearance from buildings and structures based on good engineering practice and acceptable to the AHJ to avoid overheating combustible material, to allow inspection and maintenance operations on the chimney, and to avoid the danger of burns to persons.

7.3.2 Listed Chimney Liners. Chimneys constructed with listed chimney liners shall be built with clearances in conformance with the listing of the liner system.

7.4 Masonry Chimneys for Incinerators.

7.4.1 In addition to the requirements in Section 7.1 through Section 7.3, masonry chimneys for incinerators shall meet the requirements of 7.4.2 through 7.4.3.3.

7.4.2 Chute-Fed Incinerators. Chute-fed incinerators shall meet the requirements of NFPA 82, *Standard on Incinerators and Waste and Linen Handling Systems and Equipment.*

7.4.3 Commercial and Industrial Incinerators. Masonry chimneys for commercial and industrial incinerators shall be supported on foundations of one of the following:

(1) Masonry
(2) Reinforced portland cement concrete
(3) Refractory cement concrete
(4) Noncombustible material having a fire resistance rating of not less than 3 hours

Copyright National Fire Protection Association
Provided by IHS under license with NFPA
No reproduction or networking permitted without license from IHS
Not for Resale

7.4.3.1 Foundations and supports shall be independent of the building construction and transfer the load to the ground.

7.4.3.2 Chimneys shall be permitted to be supported on incinerator walls if the incinerator foundation and walls are built to support the load imposed and shall be constructed to prevent excessive stress on the roof of the combustion chamber.

7.4.3.3 The terminus of the chimney for commercial and industrial incinerators shall be equipped with an approved spark arrester if the incinerator does not include effective means for arresting sparks and fly ash. *(See* NFPA 82, *Standard on Incinerators and Waste and Linen Handling Systems and Equipment.)*

Chapter 8 Unlisted Metal Chimneys (Smokestacks) for Nonresidential Applications

8.1 General Requirements.

8.1.1 One- and Two-Family Dwellings. Single-wall metal chimneys or unlisted metal chimneys shall not be used inside or outside one- and two-family dwellings.

8.1.2 Construction.

8.1.2.1 Unlisted metal chimneys shall be constructed of steel or cast iron.

8.1.2.2 Sheet steel shall have a thickness not less than that indicated in Table 8.1.2.2.

8.1.3 Connection and Support.

8.1.3.1 Unlisted metal chimneys shall be attached by one of the following:

(1) Rivets
(2) Welds
(3) Bolts

8.1.3.2 Chimneys shall be securely supported and constructed in accordance with the following:

(1) Strength to resist stresses due to steady or gusting wind loads
(2) Adequate anchoring, bracing, and inherent strength to withstand seismic and wind-induced vibrational stresses
(3) Proper material thickness for durability considering fuel analysis, gas temperature, and exposure
(4) Security against leakage of flue gases under positive pressure
(5) Allowance for thermal expansion of breeching and vertical sections

8.1.4 Prohibited Uses. Unlisted metal chimneys shall not be used inside ventilating ducts.

8.1.5 Clearances.

8.1.5.1 Unlisted metal chimneys shall have clearance from buildings and structures to avoid heating combustible material to a temperature in excess of 90°F (32°C) above ambient and to allow inspection and maintenance operations on the chimney.

8.1.5.2 Chimneys shall be located or shielded to avoid the danger of burns to persons.

8.1.6 Foundations and Supports.

8.1.6.1 Unlisted metal chimneys and shall be independent of the building construction and transfer the load to the ground and shall be supported on foundations of one of the following:

(1) Masonry
(2) Reinforced portland cement concrete
(3) Refractory cement concrete
(4) Noncombustible material having a fire resistance rating of not less than 3 hours

8.1.6.2 An unlisted metal chimney also can be supported at intervals by the building structure, in which case expansion joints shall be provided at each support level.

8.1.6.3 All joints shall be liquidtight or of a design that allows liquid to drain to the interior of the chimney.

8.1.7 Flue Gases Below 350°F (177°C). Unlisted metal chimneys serving appliances producing flue gases having a temperature below 350°F (177°C) at the entrance to the chimney at full load or partial load shall be one of the following:

(1) Constructed of or lined with acid- and condensate-resistant stainless steel
(2) Lined with acid- and condensate-resistant refractory material or other approved materials

8.1.8* Sizing. Unlisted metal chimneys shall be sized and configured in accordance with the appliance manufacturers' instructions or approved methods.

8.2 Unlisted Metal Chimneys for Residential-Type or Low-Heat Appliances.

8.2.1 Termination (Height).

8.2.1.1 Unlisted metal chimneys for residential-type or low-heat appliances shall extend to the following:

(1) At least 3 ft (0.92 m) above the highest point at which they pass through the roof of a building
(2) At least 2 ft (0.61 m) higher than any portion of a building within 10 ft (3.1 m) *[See Figure 4.2(a) and Figure 4.2(b).]*

Table 8.1.2.2 Minimum Thickness of Sheet Steel Chimneys

MSG No.	Minimum Thickness		Area		Equivalent Round Diameter	
	in.	mm	$in.^2$	m^2	in.	mm
16	0.053	1.35	≤154	≤0.0994	≤14	≤356
14	0.067	1.70	155 to 201	0.0999 to 0.1296	>14 to ≤16	>356 to ≤406
12	0.093	2.36	202 to 254	0.1303 to 0.1638	>16 to ≤18	>406 to ≤457
10	0.123	3.12	>254	>0.1638	>18	>457

Note: Regardless of minimum thicknesses specified in this table, the thickness of sheet metal shall be adequate to meet the requirements of 8.1.3.

Copyright National Fire Protection Association
Provided by IHS under license with NFPA
No reproduction or networking permitted without license from IHS
Not for Resale

8.2.1.2 The outlet of an unlisted metal chimney for residential-type and low-heat appliances equipped with a mechanical exhaust system shall be permitted to terminate at a location that meets the following stipulations:

(1) Not less than 3 ft (0.92 m) from an adjacent building or building opening
(2) At least 10 ft (3.1 m) abovegrade or above walkways

8.2.1.3 The outlet shall be arranged such that the flue gases are not directed so that they jeopardize people, overheat combustible structures, or enter building openings in the vicinity of the outlet.

8.2.2 Clearances.

8.2.2.1 Exterior.

8.2.2.1.1 Exterior unlisted metal chimneys used only for residential-type or low-heat appliances shall have a clearance of not less than 18 in. (457 mm) from a wall of wood frame construction and from any combustible material.

8.2.2.1.2 Exterior unlisted metal chimneys over 18 in. (457 mm) in diameter shall have a clearance of not less than 4 in. (102 mm) from a building wall of noncombustible construction.

8.2.2.1.3 Exterior unlisted metal chimneys 18 in. (457 mm) or less in diameter shall have a clearance of not less than 2 in. (51 mm) from a building wall of noncombustible construction.

8.2.2.1.4 An unshielded unlisted metal chimney erected on the exterior of a building shall not be installed less than 2 ft (0.61 m) from any door, window, or walkway.

8.2.2.2 Interior.

8.2.2.2.1 Where an unlisted metal chimney extends through any story(ies) of a building above that in which the appliances connected to the chimney are installed, it shall be enclosed in those upper stories within a continuous enclosure constructed of noncombustible materials complying with the following:

(1) The enclosure shall extend from the ceiling of the appliance room to or through the roof so that it maintains the integrity of the fire separations required by the applicable building code provisions.
(2) Where the building is less than four stories in height, the enclosure walls shall have a fire resistance rating of not less than 1 hour.
(3) Where the building is four stories or more in height, the enclosure walls shall have a fire resistance rating of not less than 2 hours.
(4) The enclosure walls shall provide a space not less than 12 in. (305 mm) on all sides of the chimney sufficient to allow inspection and repair.
(5) Only doorways for inspection purposes equipped with approved self-closing fire doors shall be permitted.

8.2.2.2.2 Where an unlisted metal chimney serving only residential-type or low-heat appliances is located in the same story of a building as that story in which the appliances connected thereto are located, it shall have a clearance of not less than 18 in. (457 mm) from a wall of wood frame construction and from any combustible material.

8.2.2.2.3 Interior unlisted metal chimneys over 18 in. (457 mm) in diameter shall have a clearance of not less than 4 in. (102 mm) from a building wall of noncombustible construction.

8.2.2.2.4 Interior unlisted metal chimneys 18 in. (457 mm) or less in diameter shall have a clearance of not less than 2 in. (51 mm) from a building wall of noncombustible construction.

8.2.2.2.5 Where an unlisted metal chimney serving only residential-type or low-heat appliances passes through a roof constructed of combustible material, it shall be guarded by a ventilating thimble of galvanized steel or approved corrosion-resistant metal that adheres to the following criteria:

(1) Is not less than 0.024 in. (0.61 mm) in thickness
(2) Extends not less than 9 in. (229 mm) below and 9 in. (229 mm) above the roof construction

8.2.2.2.6 Where combustible material in the roof construction is cut away to provide not less than 18 in. (457 mm) clearance on all sides of the chimney, using entirely noncombustible material to close such an opening, the requirements of 8.2.2.2.5 shall not apply.

8.2.2.2.7 The ventilating thimble shall be constructed of galvanized steel not less than 24 gauge [0.024 in. (0.61 mm)] in thickness and provide the following:

(1) A clearance of not less than 9 in. (229 mm) from the chimney surface to the nearest combustibles
(2) A minimum 1 in. (25.4 mm) air space between the thimble wall and combustible material
(3) A ventilated space between the chimney and the thimble wall *(See Figure 8.2.2.2.7.)*

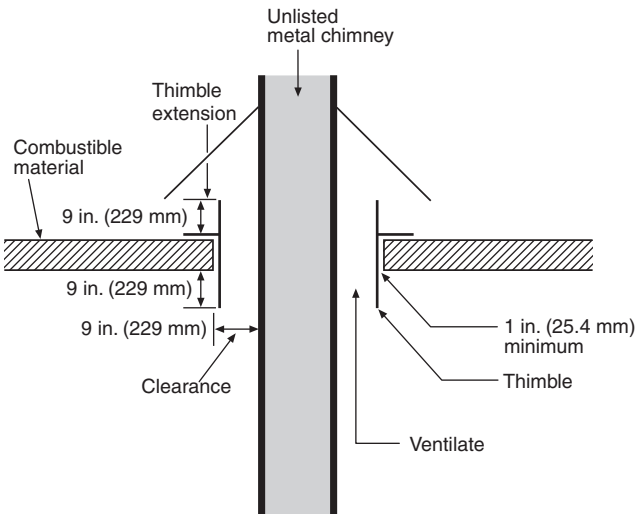

FIGURE 8.2.2.2.7 Ventilating Thimble.

8.3 Unlisted Metal Chimneys for Medium-Heat Appliances.

8.3.1 Construction. Unlisted metal chimneys serving medium-heat appliances shall be constructed as follows:

(1) Lined with medium-duty fireclay brick (ASTM C 27, *Standard Classification of Fireclay and High-Alumina Refractory Brick*) or its equivalent
(2) Laid in medium-duty refractory mortar (ASTM C 199, *Standard Test Method for Pier Test for Refractory Mortars*) or its equivalent

Copyright National Fire Protection Association
Provided by IHS under license with NFPA
No reproduction or networking permitted without license from IHS
Not for Resale

8.3.1.1 The lining shall be at least 2 in. (51 mm) thick for chimneys having a diameter or greatest cross-sectional dimension of 18 in. (457 mm) or less.

8.3.1.2 The lining shall have a thickness of not less than 4 in. (102 mm) laid on a full-width bed for chimneys having a diameter or greatest cross-sectional dimension greater than 18 in. (457 mm), and the following criteria also shall be met:

(1) The lining shall start 2 ft (0.61 m) or more below the lowest chimney connector entrance.
(2) The lining shall extend to a height of at least 25 ft (7.6 m) above the highest chimney connector entrance.
(3) Chimneys terminating 25 ft (7.6 m) or less above a chimney connector entrance shall be lined to the top.

8.3.2 Termination (Height). Unlisted metal chimneys for medium-heat appliances shall extend not less than 10 ft (3.1 m) higher than any portion of any building within 25 ft (7.6 m).

8.3.3 Clearances.

8.3.3.1 Exterior.

8.3.3.1.1 Exterior unlisted metal chimneys used for medium-heat appliances shall have a clearance of not less than 24 in. (0.61 m) from a wall of wood frame construction and from any combustible material.

8.3.3.1.2 Exterior unlisted metal chimneys over 18 in. (457 mm) in diameter shall have a clearance of not less than 4 in. (102 mm) from a building wall of noncombustible construction.

8.3.3.1.3 Exterior unlisted metal chimneys 18 in. (457 mm) or less in diameter shall have a clearance of not less than 2 in. (51 mm) from a building wall of noncombustible construction.

8.3.3.1.4 An uninsulated, unlisted metal chimney erected on the exterior of a building shall not be installed less than 24 in. (0.61 m) from any door or window or from any walkway.

8.3.3.2 Interior.

8.3.3.2.1 Where an unlisted metal chimney extends through any story(ies) of a building above that story in which the appliances connected to the chimney are installed, it shall be enclosed in those upper stories within a continuous enclosure constructed of noncombustible materials complying with the following:

(1) The enclosure shall extend from the ceiling of the appliance room to or through the roof so that it maintains the integrity of the fire separations required by the applicable building code provisions.
(2) Where the building is less than four stories in height, the enclosure walls shall have a fire resistance rating of not less than 1 hour.
(3) Where the building is four stories or more in height, the enclosure walls shall have a fire resistance rating of not less than 2 hours.
(4) The enclosure walls shall provide a space not less than 12 in. (305 mm) on all sides of the chimney to allow inspection and repair.
(5) Only doorways for inspection purposes equipped with approved self-closing 1-hour fire doors shall be permitted.

8.3.3.2.2 Where an unlisted metal chimney serving a medium-heat appliance passes through a roof constructed of combustible material, it shall be as follows:

(1) Guarded by a ventilating thimble of galvanized steel or approved corrosion-resistant metal extending not less than 9 in. (229 mm) below and 9 in. (229 mm) above the roof construction
(2) Of a size that allows a minimum clearance of 18 in. (457 mm) on all sides of the chimney

8.3.3.2.3 Where an unlisted metal chimney serving medium-heat appliances is located in the same story of a building as that story in which the appliances connected thereto are located, it shall have a clearance of not less than 36 in. (0.92 m) from a wall of wood frame construction and from any combustible material.

8.3.3.2.4 Interior unlisted metal chimneys over 18 in. (457 mm) in diameter shall have a clearance of not less than 4 in. (102 mm) from a building wall of noncombustible construction.

8.3.3.2.5 Interior unlisted metal chimneys 18 in. (457 mm) or less in diameter shall have a clearance of not less than 2 in. (51 mm) from a building wall of noncombustible construction.

8.4 Unlisted Metal Chimneys for High-Heat Appliances.

8.4.1 Construction.

8.4.1.1 Unlisted metal chimneys for high-heat appliances shall be lined with high-duty fireclay brick (ASTM C 27, *Standard Classification of Fireclay and High-Alumina Refractory Brick*) or its equivalent, not less than 4 in. (102 mm) thick, laid on a full-width bed in high-duty refractory mortar (ASTM C 199, *Standard Test Method for Pier Test for Refractory Mortars*) or its equivalent.

8.4.1.2 The lining shall start 2 ft (0.61 m) or more below the lowest chimney connector entrance, and the following criteria also shall be met:

(1) The lining shall extend to a height of at least 25 ft (7.6 m) above the highest chimney connector entrance.
(2) Chimneys terminating 25 ft (7.6 m) or less above a chimney connector entrance shall be lined to the top.

8.4.2 Termination (Height). Unlisted metal chimneys for high-heat appliances shall extend not less than 20 ft (6.1 m) higher than any portion of any building within 50 ft (15.3 m).

Chapter 9 Chimney Connectors and Vent Connectors

9.1 Connectors Required. Connectors shall be used to connect appliances to the vertical chimney or vent unless the chimney or vent is attached directly to the appliance.

9.2 Materials.

9.2.1 Connectors shall be as follows:

(1) Made of noncombustible, corrosion-resistant material
(2) Capable of withstanding the flue gas condensate, pressures, and temperatures produced by the appliances
(3) Of sufficient thickness to withstand physical damage

9.2.2 Connectors for residential-type appliances shall conform to the requirements of this chapter.

Copyright National Fire Protection Association
Provided by IHS under license with NFPA
No reproduction or networking permitted without license from IHS
Not for Resale

9.2.2.1 Vent connectors for listed gas appliances and appliances listed for use with Type B gas vents that are installed in attics shall be one of the following:

(1) Type B or Type L vent material
(2) Listed vent connector material having at least an equivalent insulating value

9.2.2.2 Vent connectors for appliances that are listed for use with Type B gas vents and for appliances with draft hoods and equipped with listed conversion burners and that are not installed in attics shall be of Type B or Type L material or other material listed for use as connectors or shall be smooth interior-wall metal pipe having strength and resistance to heat and corrosion equivalent to that of galvanized sheet steel not less than 0.018 in. (0.46 mm) thick, aluminum (1100 or 3003 alloy or the equivalent) not less than 0.027 in. (0.69 mm) thick, or stainless steel not less than 0.012 in. (0.31 mm) thick.

9.2.2.2.1 Where reduced clearance is necessary, listed reduced clearance connectors shall be permitted to be used if they are installed in accordance with the manufacturer's installation instructions.

9.2.2.3 Connectors for oil appliances, solid fuel–burning appliances, domestic-type incinerators, and gas appliances other than those specified in 9.2.2.1 and 9.2.2.2 shall be constructed of one of the following:

(1) Factory-built chimney material
(2) Type L vent material
(3) Steel pipe having resistance to corrosion and heat not less than that of pipe specified in Table 9.2.2.3

Table 9.2.2.3 Metal Thickness for Steel Pipe Connectors

Diameter of Connector		Sheet Gauge No.	Minimum Thickness	
in.	mm		in.	mm
<6	<152	26	0.019	0.48
≥6 to ≤10	≥152 to ≤254	24	0.024	0.61
>10 to ≤16	>254 to ≤406	22	0.029	0.74
>16	>406	16	0.056	1.42

9.2.3 Connectors for low-heat appliances shall be constructed of one of the following:

(1) Listed factory-built chimney material
(2) Steel pipe having resistance to corrosion and heat and not less than the thickness of steel pipe specified in Table 9.2.2.3

9.2.4 Connectors for medium-heat appliances and commercial and industrial incinerators shall conform to the requirements of 9.2.4.1 through 9.2.4.2.2 and shall be constructed of one of the following:

(1) Listed medium-heat chimney sections
(2) Steel not lighter than that designated for unlisted metal chimneys in Table 8.1.2.2

9.2.4.1 Connector sections of listed medium-heat chimneys shall be joined using one of the following:

(1) Continuous welds
(2) Flanges
(3) Couplings

9.2.4.2 Steel connectors shall be lined with medium-duty fireclay brick (ASTM C 27, *Standard Classification of Fireclay and High-Alumina Refractory Brick*) laid in medium-duty refractory mortar (ASTM C 199, *Standard Test Method for Pier Test for Refractory Mortars*) or the equivalent.

9.2.4.2.1 The lining shall be at least 2 in. (51 mm) thick for connectors having an inside diameter or greatest inside cross-sectional dimension of 18 in. (457 mm) or less.

9.2.4.2.2 The lining shall be at least 4 in. (102 mm) thick laid on the 4 in. (102 mm) bed for connectors having an inside diameter or greatest inside cross-sectional dimension greater than 18 in. (457 mm).

9.2.5 Metal connectors for high-heat appliances shall conform to the requirements of 9.2.5.1 and 9.2.5.2.

9.2.5.1 Metal connectors for high-heat appliances shall be made of steel not lighter than that designated for chimneys in Table 8.1.2.2.

9.2.5.2 The connectors shall be lined with high-duty fireclay brick (ASTM C 27, *Standard Classification of Fireclay and High-Alumina Refractory Brick*) or its equivalent having a thickness of not less than 4 in. (102 mm) laid on the 4 in. (102 mm) bed in high-duty refractory mortar (ASTM C 199, *Standard Test Method for Pier Test for Refractory Mortars*) or its equivalent.

9.2.6 Masonry connectors or breeching shall be made of refractory material equivalent in resistance to heat and corrosion to high-duty fireclay brick (ASTM C 27, *Standard Classification of Fireclay and High-Alumina Refractory Brick*) not less than 4 in. (102 mm) thick.

9.3 Length. A connector shall be as short and straight as practicable. The appliance shall be located as close as practicable to the chimney or vent.

9.3.1 The horizontal length of a connector to a natural draft chimney or vent serving a single appliance shall be in accordance with one of the following:

(1) Not more than 50 percent of the height of the vertical portion of the chimney above the connector for a connector serving a solid fuel–burning appliance
(2) Not in excess of the design specifications for a connector that is part of an engineered venting system
(3)*In accordance with NFPA 54, *National Fuel Gas Code*, for Category I or draft hood–equipped gas appliances
(4) Not more than 75 percent of the height of the vertical portion of the chimney or vent above the connector for all other fuels

9.3.2 The horizontal length, design, and construction of combined connectors, or connectors to a manifold joining two or more appliances to a chimney or vent, shall be determined in accordance with approved engineering methods.

9.4 Size.

9.4.1 The connector shall be sized for its entire length in accordance with 9.4.2 and 9.4.3.

9.4.2 The effective area of a connector for a single appliance shall be not less than the area of the appliance flue collar, unless it is part of an engineered venting system.

Copyright National Fire Protection Association
Provided by IHS under license with NFPA
No reproduction or networking permitted without license from IHS
Not for Resale

9.4.3 A connector or manifold serving two or more appliances shall have an effective area equivalent to the combined areas of the appliance flue collars or individual connectors, unless it is part of an engineered venting system.

9.5 Clearance.

9.5.1 Clearances from connectors to combustible material shall be in accordance with the requirements of 9.5.1.1 through 9.5.5.3 for both unprotected and protected installations.

9.5.1.1 Clearances from connectors to unprotected combustible material shall be in accordance with Table 9.5.1.1 and Figure 9.5.1.1.

9.5.1.2 Clearances from connectors to combustible material shall be permitted to be reduced, provided the combustible material is protected by an engineered protection system acceptable to the AHJ, using materials or products listed for protection purposes, or is in accordance with Table 9.5.1.2 and Figure 9.5.1.1 chimney or vent connectors.

9.5.1.2.1 Where the required clearance with no protection is 18 in. (457 mm), clearances shall be permitted to be reduced to the distances in the Minimum Clearance column of Table 9.5.1.2.

9.5.1.2.2 For other required clearances, calculate the allowable clearance from the Maximum Allowable Reduction in Clearance column of Table 9.5.1.2.

9.5.1.2.3 Spacers and ties shall meet the following criteria:

(1) Spacers and ties shall be of noncombustible material.
(2) No spacers or ties shall be used directly behind an appliance or a connector.

9.5.1.2.4 Mineral wool batts (blanket or board) shall have a minimum density of 8 lb/ft^3 (128.7 kg/m^3) and have a minimum melting point of 1500°F (816°C).

9.5.1.2.5 Insulation material used as part of a clearance reduction system shall have a thermal conductivity of 1.0 Btu-in./hr-ft^2-°F (4.88 kg-cal/hr-m^2-°C) or less. Insulation board shall be formed of noncombustible material.

9.5.1.2.6 If a single-wall connector passes through a masonry wall used as a wall shield, there shall be at least ½ in. (12.7 mm) of open, ventilated air space between the connector and the masonry.

9.5.1.2.7 There shall be at least 1 in. (25.4 mm) between the connector and the protector.

9.5.1.2.8 In no case shall the clearance between the connector and the wall surface be reduced below that allowed in Table 9.5.1.2.

9.5.2* Engineered systems installed for the protection of combustible materials shall reduce the temperature rise of such materials to 90°F (50°C) above ambient.

9.5.3 The following shall apply to clearance protection material:

(1) All clearances shall be measured from the outer surface of the connector to the combustible material, disregarding any intervening protection applied to the combustible material.
(2) The clearance protection material shall not interfere with the accessibility of the connector.

Table 9.5.1.1 Chimney Connector and Vent Connector Clearances from Combustible Materials

	Minimum Clearance[a]	
Description of Appliance	**in.**	**mm**
Residential-Type Appliances		
Single-Wall Metal Pipe Connectors		
Gas appliances without draft hoods	18	457
Electric, gas, and oil incinerators	18	457
Oil and solid-fuel appliances	18	457
Unlisted gas appliances with draft hoods	9	229
Boilers and furnaces equipped with listed gas burners and with draft hoods	9	229
Oil appliances listed as suitable for use with Type L vents	9	229
Listed gas appliances with draft hoods and other Category I gas appliances listed for use with Type B vents[c]	6	152
Type L Vent Piping Connectors		
Gas appliances without draft hoods	9	229
Electric, gas, and oil incinerators	9	229
Oil and solid-fuel appliances	9	229
Unlisted gas appliances with draft hoods	6	152
Boilers and furnaces equipped with listed gas burners and with draft hoods	6	152
Oil appliances listed as suitable for use with Type L vents[b]		
Listed gas appliances with draft hoods and other Category I gas appliances listed for use with Type B vents[c]		
Type B Gas Vent Piping Connectors		
Listed gas appliances with draft hoods and other Category I gas appliances listed for use with Type B vents[c]		
Low-Heat Appliances		
Single-Wall Metal Pipe Connectors		
Gas, oil, and solid-fuel boilers, furnaces, and water heaters	18	457
Restaurant-type ranges	18	457
Oil unit heaters	18	457
Unlisted gas unit heaters	18	457
Listed gas unit heaters with draft hoods	6	152
Other low-heat nonresidential appliances	18	457
Medium-Heat Appliances		
Single-Wall Metal Pipe Connectors		
All gas, oil, and solid-fuel appliances	36	914
High-Heat Appliances		
Masonry or Metal Connectors		
All gas, oil, and solid-fuel appliances[d]		

[a] If the listing of an appliance specifies a different clearance, the listed clearance takes precedence.
[b] If listed Type L vent piping is used, the clearance is permitted to be in accordance with the vent listing.
[c] If listed Type B or Type L vent piping is used, the clearance is permitted to be in accordance with the appliance and vent listing.
[d] See 9.5.1.2.

Copyright National Fire Protection Association
Provided by IHS under license with NFPA
No reproduction or networking permitted without license from IHS
Not for Resale

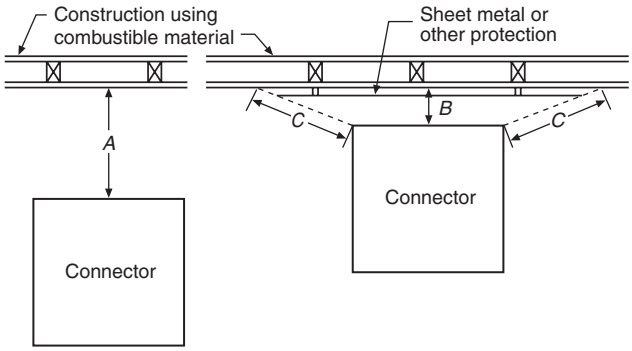

Measurements for Square Connectors

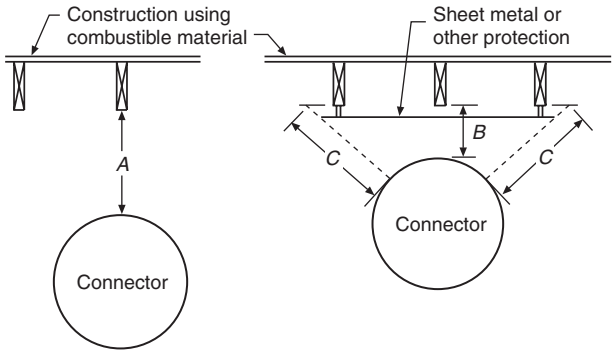

Measurements for Round Connectors

Notes:
(1) *A* equals the required clearance with no protection.
(2) *B* equals the reduced clearance permitted.
(3) The protection applied to the construction using combustible material shall extend far enough in each direction to make *C* equal to *A*.

FIGURE 9.5.1.1 Extent of Protection Required to Reduce Clearances from Chimney or Vent Connectors.

9.5.4 Materials and products listed for the purpose of reducing clearance to combustibles shall be installed in accordance with the conditions of the listings and the manufacturers' instructions.

9.5.5 For clearance reduction systems using an air space between the combustible wall and the wall protector, air circulation shall be provided by one of the methods specified in 9.5.5.1 through 9.5.5.3.

9.5.5.1 Air circulation shall be provided by leaving all edges of the wall protector open with at least a 1 in. (25.4 mm) air gap.

9.5.5.2 Where wall protectors are mounted on a single flat wall away from corners, air circulation shall be provided by leaving only the bottom and top edges or only the side and top edges open with at least a 1 in. (25.4 mm) air gap.

9.5.5.3 Wall protectors that cover two walls in a corner shall be open at the bottom and top edges with at least a 1 in. (25.4 mm) air gap.

9.6 Location. Where the connector used for a gas appliance having a draft hood or for Category I appliances is located in or passes through an attic, crawl space, or other cold area, that portion of the connector shall be one of the following:

(1) Listed Type B or Type L vent material
(2) Listed vent connector material having at least an equivalent insulating value

9.7 Installation.

9.7.1 The following criteria shall apply to a connector to a masonry chimney:

(1) It shall extend through the wall to the inner face or liner but not beyond.
(2) It shall be firmly cemented to masonry.
(3) If a thimble is used to facilitate removal of the chimney connector for cleaning, the thimble shall be permanently cemented in place with high-temperature cement.

9.7.2 A chimney connector or vent connector shall not pass through any floor or ceiling or through a fire wall or fire partition.

9.7.3 Connectors for listed gas appliances with draft hoods, other listed Category I gas appliances (Table 5.2.3.2, Column I), and oil appliances listed for Type L vents (Table 5.2.3.2, Column III) shall be permitted to pass through walls or partitions constructed of combustible material provided one of the following conditions is met:

(1) They are made of listed Type B or Type L vent material for gas appliances or of listed Type L vent material for oil appliances and are installed with not less than listed clearances to combustible material.
(2) They are made of single-wall metal pipe and guarded by a ventilated metal thimble not less than 4 in. (102 mm) larger in diameter than the vent connector.

9.7.4 Connectors for residential-type appliances (Table 5.2.2.1, Column I) shall be permitted to pass through walls or partitions constructed of combustible material if one of the following is true of the connector:

(1) It is listed for wall pass-through.
(2) It is routed through a device listed for wall pass-through and is installed in accordance with the conditions of the listing.

9.7.5 The following shall apply to connectors for residential-type appliances (Table 5.2.2.1, Column I) with inside diameters less than or equal to 10 in. (254 mm):

(1) They shall be permitted to pass through walls or partitions constructed of combustible material to a masonry chimney, provided the connector system selected or fabricated is installed in accordance with the conditions and clearances specified in Figure 9.7.5.
(2) Any unexposed metal that is used as part of a wall pass-through system and is exposed to flue gases shall be constructed of stainless steel or other equivalent material that resists corrosion, softening, or cracking from flue gases at temperatures up to 1800°F (982°C).

9.7.6 A connector for a medium- or high-heat appliance (Table 5.2.2.1, Columns IV and V) shall not pass through walls or partitions constructed of combustible material.

9.7.7 Connectors shall maintain a pitch or rise of at least ¼ in./ft (6.4 mm/305 mm) of horizontal length of pipe from the appliance to the chimney.

Copyright National Fire Protection Association
Provided by IHS under license with NFPA
No reproduction or networking permitted without license from IHS
Not for Resale

Table 9.5.1.2 Reduction of Connector Clearance with Specified Forms of Protection

Clearance Reduction Applied to and Covering All Combustible Surfaces Within the Distance Specified as Required Clearance with No Protection*	Maximum Allowable Reduction in Clearance (%)		Minimum Clearance			
			As Wall Protector		As Ceiling Protector	
	As Wall Protector	As Ceiling Protector	in.	mm	in.	mm
3½ in. (90 mm) thick masonry wall without ventilated air space	33	—	12	305	—	—
½ in. (12.7 mm) thick noncombustible insulation board over 1 in. (25.4 mm) glass fiber or mineral wool batts without ventilated air space	50	33	9	229	12	305
0.024 in. (0.61 mm), 24 gauge sheet metal over 1 in. (25.4 mm) glass fiber or mineral wool batts reinforced with wire, or equivalent, on rear face with ventilated air space	66	50	6	152	9	229
3½ in. (90 mm) thick masonry wall with ventilated air space	66	—	6	152	—	—
0.024 in. (0.61 mm), 24 gauge sheet metal with ventilated air space	66	50	6	152	9	229
½ in. (12.7 mm) thick noncombustible insulation board with ventilated air space	66	50	6	152	9	229
0.024 in. (0.61 mm), 24 gauge sheet metal with ventilated air space over 0.024 in. (0.61 mm), 24 gauge sheet metal with ventilated air space	66	50	6	152	9	229
1 in. (25.4 mm) glass fiber or mineral wool batts sandwiched between two sheets 0.024 in. (0.61 mm), 24 gauge sheet metal with ventilated air space	66	50	6	152	9	229

Notes:
(1) All clearances and thicknesses are minimum; larger clearances and thicknesses may be permitted.
(2) To calculate the minimum allowable clearance, the following formula can be used: $C_{br} = C_{un}\ (1 - R/100)$, where C_{br} is the minimum allowable clearance, C_{un} is the required clearance with no protection, and R is the maximum allowable reduction in clearance.
*See 9.5.1 and Table 9.5.1.1.

9.7.8 Connectors shall be installed without sharp turns or other construction features that would create excessive resistance to the flow of flue gases.

9.7.9* The following shall apply to a device, other than a damper, that obstructs the free flow of flue gas:

(1) It shall not be installed in a connector, chimney, or vent unless listed for such use. *(For requirements regarding dampers, see Section 9.9.)*
(2) Approved economizers, heat reclaimers, and recuperators shall be permitted in venting systems of equipment that are not required to be equipped with draft hoods in accordance with the fuel-burning appliance listing, provided performance is in accordance with Section 4.1.

9.7.10 Connectors shall be supported and joints fastened using sheet metal screws, rivets, or other approved means.

9.7.11 The entire length of a connector shall be accessible for inspection, cleaning, and replacement.

9.7.12 A connector serving a gas or oil appliance shall not be connected to a chimney flue serving a factory-built fireplace unless specifically listed for such installation.

9.7.13 The following shall apply to gas or oil appliances:

(1) A connector serving a gas or oil appliance shall be permitted to be connected to a masonry fireplace flue if one of the following conditions is met:
   (a) The fireplace opening is sealed.
   (b) The chimney flue that vents the fireplace is permanently sealed below the connection.
(2) Listed gas or oil appliances shall be installed in accordance with the listing.

9.7.14 The following shall apply to vent and chimney connectors:

(1) They shall not be covered with insulation.
(2) Listed insulated vent and chimney connectors shall be installed in accordance with the terms of their listing.

9.8 Interconnection.

9.8.1 Connectors serving appliances operating under natural draft shall not be connected into any portion of a mechanical draft system operating under positive pressure.

Copyright National Fire Protection Association
Provided by IHS under license with NFPA
No reproduction or networking permitted without license from IHS
Not for Resale

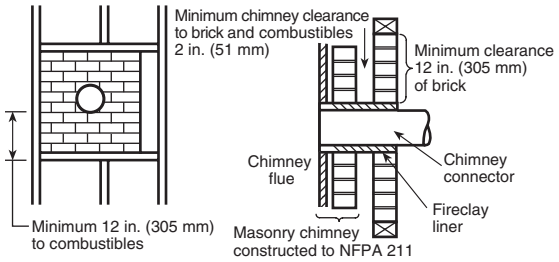

System A. Minimum 3.5 in. (90 mm) thick brick masonry wall framed into combustible wall with a minimum of 12 in. (305 mm) brick separation from clay liner to combustibles. Fireclay liner (ASTM C 315, *Standard Specification for Clay Fire Linings*, or equivalent), minimum 5⁄8 in. (16 mm) wall thickness, shall run from outer surface of brick wall to, but not beyond, the inner surface of chimney flue liner and shall be firmly cemented in place.

Clearance: 12 in. (305 mm)

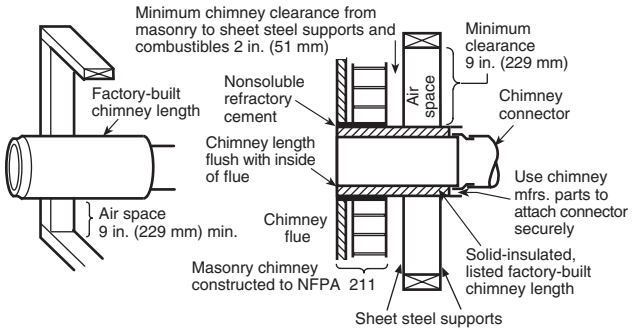

System B. Solid-insulated, listed factory-built chimney length of the same inside diameter as the chimney connector and having 1 in. (25.4 mm) or more of insulation with a minimum 9 in. (229 mm) air space between the outer wall of the chimney length and combustibles.

The inner end of the chimney length shall be flush with the inside of the masonry chimney flue and shall be sealed to the flue and to the brick masonry penetration with non-water-soluble refractory cement. Supports shall be securely fastened to wall surfaces on all sides.

Fasteners between supports and the chimney length shall not penetrate the chimney liner.

Clearance: 9 in. (229 mm)

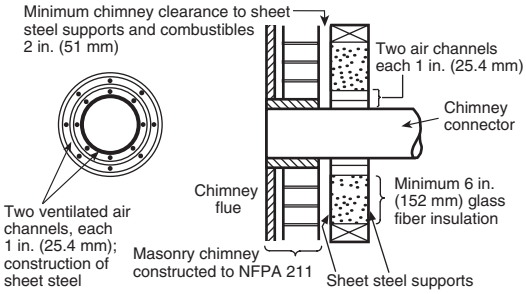

System C. Sheet steel chimney connector, minimum 24 gauge [0.024 in. (0.61 mm)] in thickness, with a ventilated thimble, minimum 24 gauge [0.024 in. (0.61 mm)] in thickness, having two 1 in. (25.4 mm) air channels, separated from combustibles by a minimum of 6 in. (152 mm) of glass fiber insulation. Opening shall be covered, and thimble supported with a sheet steel support, minimum 24 gauge [0.024 in. (0.61 mm)] in thickness.

Supports shall be securely fastened to wall surfaces on all sides and shall be sized to fit and hold chimney section. Fasteners used to secure chimney section shall not penetrate chimney flue liner.

Clearance: 6 in. (152 mm)

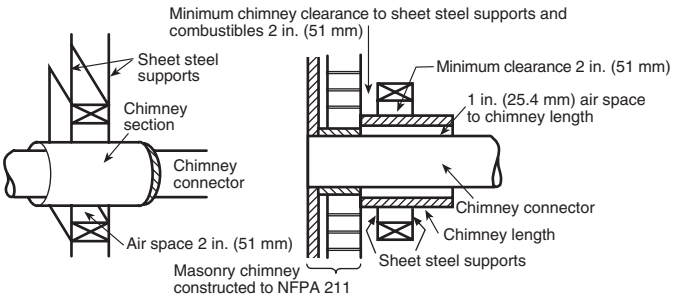

System D. Solid-insulated, listed factory-built chimney length with an inside diameter 2 in. (51 mm) larger than the chimney connector and having 1 in. (25.4 mm) or more of insulation, serving as a pass-through for a single wall sheet steel chimney connector of minimum 24 gauge [0.024 in. (0.61 mm)] thickness, with a minimum 2 in. (51 mm) air space between the outer wall of chimney section and combustibles.

Minimum length of chimney section shall be 12 in. (305 mm). Chimney section concentric with and spaced 1 in. (25.4 mm) away from connector by means of sheet steel support plates on both ends of chimney section. Opening shall be covered, and chimney section supported on both sides with sheet steel supports of minimum 24 gauge [0.024 in. (0.61 mm)] thickness.

Supports shall be securely fastened to wall surfaces on all sides and shall be sized to fit and hold chimney section. Fasteners used to secure chimney section shall not penetrate chimney flue liner.

Clearance: 2 in. (51 mm)

Additional requirements:

1. Insulation material used as part of wall pass-through system shall be of noncombustible material and shall have a thermal conductivity of 1.0 Btu-in./hr-ft^2-°F (4.88 kg-cal/hr-m^2-°C) or less.
2. All clearances and thicknesses are minimums; larger clearances and thicknesses shall be permitted.
3. Any material used to close up an opening for the connector shall be of noncombustible material.
4. A connector to a masonry chimney, except for System B, shall extend in one continuous piece through the wall pass-through system and the chimney wall to the inner face of the flue liner, but not beyond.

FIGURE 9.7.5 Chimney Connector Systems and Clearances from Combustible Walls for Residential Heating Appliances.

Copyright National Fire Protection Association
Provided by IHS under license with NFPA
No reproduction or networking permitted without license from IHS
Not for Resale

9.8.2 Unless listed for such connection, solid fuel–burning appliances shall not be connected to a chimney flue serving another appliance.

9.8.3 Gas utilization appliances and appliances burning liquid fuel shall be permitted to be connected to one chimney flue through separate openings or shall be permitted to be connected through a single opening, provided they are joined by a suitable fitting located as close as practicable to the chimney and provided both of the following apply:

(1) Sufficient draft is available for the safe combustion of each appliance and for the removal of all products of combustion.
(2) The appliances so connected are equipped with primary safety controls and all appliances are located in the same room.

9.8.4 If two or more openings are provided into one chimney flue, the following stipulations shall apply:

(1) They shall be at different levels.
(2) The smaller connector shall enter at the highest level consistent with available head room or clearance to combustible material.

9.9 Dampers.

9.9.1 Manually operated dampers shall not be placed in chimneys, vents, or connectors of stoker-fired, liquid, or gas-burning appliances.

9.9.2 Fixed baffles on the appliance side of draft hoods and draft regulators shall not be classified as dampers.

9.9.3 Manually operated dampers shall be permitted to be installed in the chimney connector of hand-fired solid fuel–burning appliances, provided such dampers do not obstruct more than 80 percent of the connector area.

9.9.4 Automatically operated dampers shall meet the following criteria:

(1) They shall be listed.
(2) They shall be installed by a qualified installer in accordance with the terms of the damper and appliance listings.

9.9.5 The installation of dampers on gas appliances shall be in accordance with NFPA 54, *National Fuel Gas Code*.

9.10 Draft Hoods. See NFPA 54, *National Fuel Gas Code*.

9.11* Draft Regulators.

9.11.1 Gas appliances connected to chimneys, other than those required to be installed with draft hoods by NFPA 54, *National Fuel Gas Code*, shall be permitted to be installed with draft regulators in accordance with the appliance manufacturer's instructions.

9.11.2 The following shall apply to solid fuel–burning appliances:

(1) They shall be permitted to be installed with draft regulators.
(2) The draft regulators shall be installed and set in accordance with the instructions furnished with the appliance or the draft regulator.

9.11.3 A barometric draft regulator, if used, shall be installed in the same room or enclosure as the appliance in such a manner that no difference in pressure between the air in the vicinity of the regulator and the combustion air supply will be permitted.

Chapter 10 Vents

10.1 Types and Uses. See 5.2.3.2.

10.1.1 Type B gas vents shall be used to vent only listed gas appliances with draft hoods and other Category I gas appliances listed for use with Type B gas vents.

10.1.2 Type B gas vents shall not be used for venting the following:

(1) Vented wall furnaces listed for use with Type BW gas vents only
(2) Incinerators
(3) Appliances that can be converted readily to the use of solid or liquid fuels
(4) Combination gas/oil-burning appliances
(5) Appliances listed for use with chimneys only
(6) Listed Categories II, III, and IV gas appliances

10.1.3 Type BW vents shall be used only with listed vented gas wall furnaces having a capacity not greater than that of the listed Type BW gas vent.

10.1.4 A Special Gas Vent shall be listed and used in accordance with the terms of its listing and the appliance and vent manufacturers' instructions.

10.1.5 Type L vents shall be used only with appliances listed as suitable for such use and with gas appliances listed as suitable for use with Type B gas vents.

10.1.6 Single-wall metal pipe other than Special Gas Vents used to vent Categories II, III, and IV gas appliances shall conform to the requirements of 10.1.6.1 through 10.1.6.4.

10.1.6.1 Single-wall metal pipe shall not be used to vent incinerators.

10.1.6.2 The pipe shall be of sheet copper with a thickness not less than 24 B & S gauge [0.0201 in. (0.51 mm)] or of galvanized steel with a thickness not less than 20 gauge [0.036 in. (0.914 mm)].

10.1.6.3 Single-wall metal pipe shall be used only for runs directly from the space in which the appliance is located through the roof or exterior wall to the outer air.

10.1.6.4 Single-wall metal pipe shall not originate in any unoccupied attic or concealed space and shall not pass through any attic, inside wall, concealed space, floor, or ceiling.

10.2 Size.

10.2.1 General. Vents shall be sized and configured in accordance with approved methods and the appliance and vent manufacturers' instructions.

10.2.2 Gas Vents. Gas vents shall be sized in accordance with NFPA 54, *National Fuel Gas Code*, or other approved methods and the appliance and vent manufacturers' instructions.

10.3 Location. Single-wall outside vents for appliances used in cold climates shall not be permitted.

10.4 Termination (Height).

10.4.1 All vents shall terminate above the roof surface.

Exception: Pellet vents and other vents as provided in 10.4.5 and Section 10.7.

Copyright National Fire Protection Association
Provided by IHS under license with NFPA
No reproduction or networking permitted without license from IHS
Not for Resale

10.4.1.1 Vents installed with mechanical exhausters shall terminate not less than 12 in. (305 mm) above the highest point where they pass through the roof surface.

10.4.1.2 Vents installed with a listed cap shall terminate in accordance with the terms of the cap's listing.

10.4.1.3 Vents installed without listed caps or mechanical exhausters shall extend 2 ft (0.61 m) above the highest point where they pass through the roof surface of a building and at least 2 ft (0.61 m) higher than any portion of a building within 10 ft (3.1 m). *[See Figure 4.2(a) and Figure 4.2(b).]*

10.4.2 Natural draft vents for gas appliances shall terminate at an elevation not less than 5 ft (1.53 m) above the highest connected appliance outlet.

Exception: As provided in 10.4.3 and 10.7.2.

10.4.3 Natural draft gas vents serving vented wall furnaces shall terminate at an elevation not less than 12 ft (3.7 m) above the bottom of the furnace.

10.4.4 Vents passing through roofs shall extend through the roof flashing.

10.4.5 Mechanical draft systems shall not be required to comply with 10.4.1 and 10.4.3, provided they comply with the following:

(1) The exit terminal of a mechanical draft system other than a direct vent appliance (sealed combustion system appliance) shall be located in accordance with the following:
   (a) Not less than 3 ft (0.92 m) above any forced air inlet located within 10 ft (3.1 m)
   (b) Not less than 4 ft (1.2 m) below, 4 ft (1.2 m) horizontally from, or 1 ft (305 mm) above any door, window, or gravity air inlet into any building
   (c) Not less than 2 ft (0.61 m) from an adjacent building and not less than 7 ft (2.1 m) above grade where located adjacent to public walkways
(2) The exit terminal shall be arranged such that flue gases are not directed so they jeopardize people, overheat combustible structures, or enter buildings.
(3) Forced draft systems and all portions of induced draft systems under positive pressure during operation shall be designed and installed to be gastight or to prevent leakage of combustion products into a building.
(4) Through-the-wall vents for gas appliances shall not terminate over public walkways or over an area where condensate or vapor could create a nuisance or hazard or could be detrimental to the operation of regulators, relief valves, or other equipment.

10.4.6 Unlisted decorative shrouds shall not be permitted at the termination of a listed Type B gas vent.

10.5 Notice of Usage.

10.5.1 In those localities where solid and liquid fuels are used, gas vents shall be plainly and permanently identified by a label attached to the wall or ceiling at a point where the vent connector enters the gas vent. The label shall read as follows:

"This Gas Vent Is for Appliances That Burn Gas. Do Not Connect to Solid or Liquid Fuel–Burning Appliances or Incinerators."

10.5.2 Where a Type B gas vent, Special Gas Vent, or pellet vent is used as the liner for a masonry chimney, the chimney shall be plainly and permanently identified by a label attached to the wall or ceiling adjacent to the point where the connector enters the chimney and that reads as follows:

"This Chimney Liner Is for [*type, category of appliance*] Appliances That Burn [*type of fuel*] Only. Do Not Connect Other Types of Appliances."

10.6* Installation.

10.6.1 Type B, Type BW, and Type L vents shall be listed and installed in full compliance with the terms of their listing and the manufacturers' installation instructions.

10.6.2 Vents installed through insulation or areas to be insulated shall be separated by a physical barrier to establish and maintain the minimum air space clearance required by the vent manufacturer.

10.6.3 Vents that pass through the floors of buildings requiring the protection of vertical openings shall be enclosed within an approved enclosure.

10.6.3.1 The enclosure walls shall have a fire resistance rating of not less than 1 hour where a vent as described in 10.6.3 is located in a building less than four stories in height.

10.6.3.2 The enclosure walls shall have a fire resistance rating of not less than 2 hours where a vent as described in 10.6.3 is located in a building four or more stories in height.

10.6.4 Unlisted single-wall metal pipe shall be installed as specified in 10.6.4.1 through 10.6.4.3.

10.6.4.1 Unlisted single-wall metal pipe shall be installed with minimum clearances from combustible material as follows:

(1) Unlisted gas appliances without draft hoods — 18 in. (457 mm)
(2) Unlisted gas appliances equipped with draft hoods — 9 in. (229 mm)
(3) Boilers and furnaces equipped with listed conversion gas burners and with draft hoods — 9 in. (229 mm)
(4) Listed gas appliances with draft hoods and other Category I gas appliances listed for use with Type B vents — 6 in. (152 mm)

Exception: Residential incinerators.

10.6.4.2 Where a single-wall metal pipe passes through an exterior wall constructed of combustible material, it shall be guarded at the point of passage by a ventilating metal thimble not smaller than the following:

(1) For listed gas-burning appliances with draft hoods and other Category I gas appliances listed for use with Type B vents, the thimble shall be 4 in. (102 mm) larger in diameter than the pipe.
(2) For unlisted gas-burning appliances with draft hoods, the thimble shall be 6 in. (152 mm) larger in diameter than the pipe.
(3) For unlisted gas appliances without draft hoods, the thimble shall be 12 in. (305 mm) larger in diameter than the pipe.

10.6.4.2.1 The requirement of 10.6.4.2 shall not apply where all combustible material in the wall is cut away from the pipe a sufficient distance to provide the clearance required by 10.6.4.1 from such pipe to combustible material, with entirely noncombustible material used to close such an opening.

10.6.4.2.2 The requirement of 10.6.4.2(1) shall not apply to residential incinerators.

Copyright National Fire Protection Association
Provided by IHS under license with NFPA
No reproduction or networking permitted without license from IHS
Not for Resale

10.6.4.2.3 Where there is a run of not less than 6 ft (1.8 m) of pipe in the open between the draft hood outlet or flue collar and the thimble, the thimble required by 10.6.4.2(1) shall be permitted to be 2 in. (51 mm) larger in diameter than the pipe.

10.6.4.3 Where an unlisted single-wall metal pipe passes through a roof constructed of combustible material, it shall be guarded at the point of passage according to one of the following:

(1) As specified for passage through a combustible exterior wall by 10.6.4.2
(2) With listed gas appliances that can be connected to Type B gas vents by a noncombustible, nonventilating thimble not less than 4 in. (102 mm) larger in diameter than the vent pipe and extending not less than 18 in. (457 mm) above and 6 in. (152 mm) below the roof with the annular space open at the bottom and closed only at the top

10.7 Special Venting Arrangements.

10.7.1 Direct Vent Appliances (Sealed Combustion System Appliances).

10.7.1.1 Direct vent appliances (sealed combustion system appliances) shall be listed and installed in accordance with their listing and the manufacturer's instructions.

10.7.1.2 The vent terminal of a direct vent appliance with an input of 10,000 Btu/hr (2930 W) or less shall be located at least 6 in. (152 mm) from any opening into a building, and such an appliance with an input of over 10,000 Btu/hr (2930 W) but not over 50,000 Btu/hr (14,650 W) shall be located not less than 9 in. (229 mm) from any opening through which vent gases could enter a building, and the vent terminal of such appliance having an input over 50,000 Btu/hr (14,650 W) shall be located not less than 12 in. (305 mm) from the opening.

10.7.1.3 The bottom of the vent terminal and the air intake shall be located at least 12 in. (305 mm) above grade.

10.7.2 Ventilating Hoods and Exhaust Systems.

10.7.2.1* Where ventilating hoods and exhaust systems serving commercial cooking appliances are used to vent gas-burning appliances installed in commercial applications, the connector from the appliance shall terminate under the hood not less than 18 in. (457 mm) from any grease filter or screen installed in the hood.

10.7.2.2 Where automatically operated appliances, such as water heaters, are vented through natural draft ventilating hoods, dampers shall not be installed in the ventilating system.

10.7.2.3 Where automatically operated appliances, such as water heaters, are vented through a ventilating hood or exhaust system equipped with a mechanical exhaust system, the appliance control system shall be interlocked to allow appliance operation only when the mechanical exhaust system is in operation. *[See 10.4.5(3).]*

10.7.2.4 A ventilating hood shall be installed above an open-top broiler in a residence.

10.7.2.4.1 The hood shall be made with tight joints and shall be constructed of copper with a thickness not less than 24 B & S gauge [0.0201 in (0.51 mm)] or of galvanized steel with a thickness not less than 28 gauge [0.016 in. (0.406 mm)].

10.7.2.4.2 A clearance of not less than ¼ in. (6.4 mm) between the hood and the underside of combustible material or metal cabinets shall be provided.

10.7.2.4.3 The vertical clearance above the broiler to the underside of combustible material or a metal cabinet protected by the hood shall be not less than 24 in. (610 mm).

10.7.2.4.4 The width and breadth of the hood shall be not less than that of the open-top broiler unit.

10.7.2.4.5 The hood shall be centered over the unit.

10.7.2.4.6 The hood shall be exhausted directly through an outside wall to the outside or connected to a suitable chimney flue used for no other purpose. The connecting duct shall conform to the following:

(1) Connecting ducts shall be made of galvanized steel not less than 28 gauge [0.016 in. (0.406 mm)].
(2) A clearance of not less than 6 in. (152 mm) shall be provided between the exhaust duct and unprotected combustible material.

Exception: This clearance shall be permitted to be reduced where the combustible material is protected in accordance with Table 9.5.1.2.

10.7.3 Clothes Dryers.

10.7.3.1 All ducts expelling lint shall be provided with a lint collector.

10.7.3.2 Requirements for gas-fired clothes dryer exhaust shall be in accordance with NFPA 54, *National Fuel Gas Code*.

10.7.3.3 All clothes dryers shall be exhausted to the outside air.

10.7.3.4 A clothes dryer exhaust duct shall not be connected into any chimney connector, vent connector, chimney, or vent.

10.7.3.5 Ducts for exhausting clothes dryers shall not be put together with sheet metal screws or other fastening means that extend into the duct.

10.7.3.6 Exhaust ducts for clothes dryers shall meet the following criteria:

(1) They shall be constructed of rigid sheet metal or other noncombustible material and shall have a smooth interior surface.
(2) They shall have a minimum thicknesses equivalent to No. 24 galvanized steel gauge [0.024 in. (0.61 mm)] for Type 2 ducts and No. 28 gauge [0.016 in. (0.406 mm)] for Type 1 ducts.

10.7.3.7 Transition ducts used to connect the dryer to the exhaust duct shall be listed for that application or installed in accordance with the clothes dryer manufacturer's installation instructions.

10.7.3.8 Exhaust ducts for Type 2 clothes dryers shall have a clearance of at least 6 in. (152 mm) to combustible material.

10.7.3.8.1 If such a duct passes through a wall, floor, or partition constructed of combustible material, all such material in the wall, floor, or partition shall be cut away from the duct to provide a clearance of at least 6 in. (152 mm), and the opening shall be closed in accordance with 10.7.3.9.

10.7.3.8.2 Exhaust ducts for Type 2 clothes dryers shall be permitted to be installed with reduced clearances to combustible material provided the combustible material is protected as described in Table 9.5.1.2.

10.7.3.9 Where ducts pass through walls, floors, or partitions, the space around the duct shall be sealed with noncombustible material.

Copyright National Fire Protection Association
Provided by IHS under license with NFPA
No reproduction or networking permitted without license from IHS
Not for Resale

10.7.3.10 The following shall apply to multiple installations of Type 1 and Type 2 clothes dryers:

(1) The installations shall be made in a manner to prevent adverse operation due to backpressures that might be created in the exhaust.
(2) Common exhaust vents that pass through floors of buildings requiring the protection of vertical openings shall be enclosed with approved walls having a fire resistance rating of not less than the following:
   (a) 1 hour, where such chimneys are located in a building less than four stories in height
   (b) 2 hours, where such chimneys are located in a building four or more stories in height

10.7.4 Equipment with Integral Vents. Gas utilization appliances incorporating integral venting means shall be considered properly vented where installed in accordance with the terms of their listing.

Chapter 11 Fireplaces

11.1 Factory-Built Fireplaces.

11.1.1 Factory-built fireplaces shall be listed and shall be installed in accordance with the terms of the listing.

11.1.2 Hearth extensions shall be provided in accordance with the manufacturers' instructions or shall be of masonry on noncombustible construction in accordance with Section 11.3.

11.1.3 Factory-built fireplaces shall be secured to the floor or structural framing of the building in order to prevent shifting.

11.1.4 Only listed decorative shrouds at the termination of a factory-built fireplace chimney shall be permitted.

11.2* Masonry Fireplaces.

11.2.1 Construction.

11.2.1.1 Fireplaces shall be constructed of solid masonry units or of reinforced portland or refractory cement concrete.

11.2.1.2 Masonry fireplaces shall be supported on foundations of one of the following:

(1) Masonry
(2) Reinforced portland cement concrete
(3) Refractory cement concrete
(4) Other noncombustible constructions having a fire resistance rating of not less than 3 hours, provided such supports are adequate for the load

11.2.1.2.1 Footings for masonry fireplaces and their chimneys shall be constructed of concrete or solid masonry at least 12 in. (305 mm) thick and shall extend at least 6 in. (152 mm) beyond the face of the fireplace or foundation wall on all sides.

11.2.1.2.2 Footings shall be founded on natural undisturbed earth or engineered fill below frost depth.

11.2.1.2.3 In areas not subject to freezing, footings shall be at least 12 in. (305 mm) below finished grade.

11.2.1.3 The firebox of a concrete or masonry fireplace shall have a minimum depth of 20 in. (508 mm).

11.2.1.3.1 The throat shall not be less than 8 in. (203 mm) above the fireplace opening.

11.2.1.3.2 The throat opening shall not be less than 4 in. (102 mm) in depth.

11.2.1.3.3 The cross-sectional area of the passageway above the firebox, including the throat, damper, and smoke chamber, shall not be less than the cross-sectional area of the flue.

11.2.1.3.4 Rumford fireplaces shall be permitted provided that the depth of the fireplace is at least 12 in. (305 mm) and at least one-third the width of the fireplace opening, and the throat is at least 12 in. (305 mm) above the lintel and at least one-twentieth the cross-sectional area of the fireplace opening.

11.2.1.4 Where a lining of low-duty fireclay brick (ASTM C 27, *Standard Classification of Fireclay and High-Alumina Refractory Brick*), firebox brick (ASTM C 1261, *Standard Specification for Firebox Brick for Residential Fireplaces*), or the equivalent, at least 2 in. (51 mm) thick laid in medium-duty refractory mortar (ASTM C 199, *Standard Test Method for Pier Test for Refractory Mortars*), or the equivalent, or other approved lining is provided, the total thickness of back and sides, including the lining, shall be not less than 8 in. (203 mm).

11.2.1.5 All joints and intersections between the hearth extension/fireplace facing and the fire chamber (firebox) shall be fully sealed with medium-duty refractory mortar (ASTM C 199, *Standard Test Method for Pier Test for Refractory Mortars*). Gaps or voids at supporting lintels and joints between steel fireplace units and the fireplace face or between the frames of dampers and the fireplace face shall be sealed with the same material or with a high-temperature [2000°F (1093°C) service rating] insulating mortar.

11.2.1.6 Where the lining described in 11.2.1.4 is not provided, the thickness of back and sides shall be not less than 12 in. (305 mm).

11.2.1.7 Where the masonry supporting a fireplace is designed to support vertical loads from the building and corbels are used to support beams or girders, corbeling shall be in accordance with 7.1.2 for masonry chimneys.

11.2.1.8 Masonry over a fireplace opening shall be supported by a lintel of noncombustible material.

11.2.1.8.1 The minimum required bearing length on each end of the fireplace opening shall be a nominal 4 in. (102 mm).

11.2.1.8.2 The fireplace throat or damper shall be located a minimum of 8 in. (203 mm) above the top of the fireplace opening.

11.2.1.9 Where a lining of low-duty fireclay brick (ASTM C 27, *Standard Classification of Fireclay and High-Alumina Refractory Brick*), firebox brick (ASTM C 1261, *Standard Specification for Firebox Brick for Residential Fireplaces*), or the equivalent, at least 2 in. (51 mm) thick laid in medium-duty refractory mortar (ASTM C 199, *Standard Test Method for Pier Test for Refractory Mortars*), or the equivalent, or other approved lining is provided, the total thickness of the smoke chamber walls, including the lining, shall be not less than 6 in. (152 mm).

11.2.1.10 Where unlined, the smoke chamber wall thickness shall be not less than 8 in. (203 mm).

11.2.1.11 The smoke chamber height shall not be greater than the inside width of the fireplace room opening.

11.2.1.12 The smoke chamber depth shall not be greater than the depth of the fireplace fire chamber. *(See Figure 11.2.1.12.)*

Copyright National Fire Protection Association
Provided by IHS under license with NFPA
No reproduction or networking permitted without license from IHS
Not for Resale

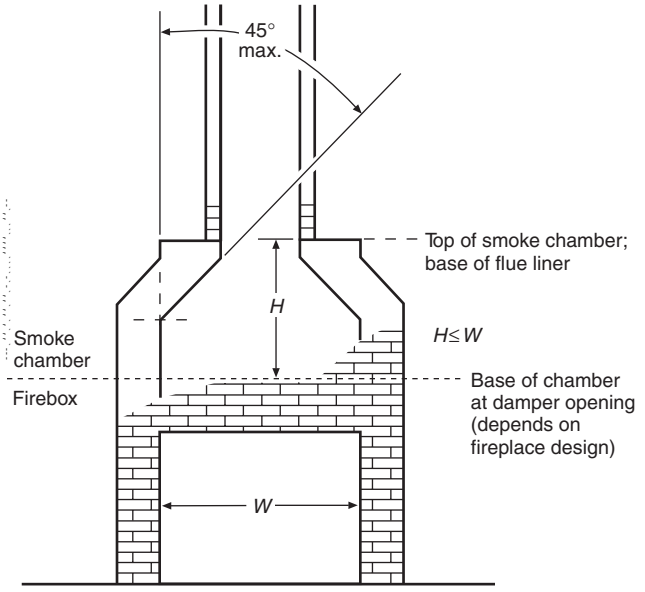

FIGURE 11.2.1.12 Sectional View of Fireplace Showing Smoke Chamber.

11.2.1.13 The inner surfaces of the smoke chamber shall be parge coated smooth, with an insulating refractory mortar, and not inclined more than 45 degrees from vertical.

11.2.1.14 Masonry fireplaces shall be provided with chimneys designed and constructed in compliance with one of the following:

(1) In accordance with the requirements for construction of masonry chimneys *(See Section 7.2.)*
(2) Where permitted by the individual listing, with approved factory-built chimneys having approved adapters in accordance with the requirements for factory-built chimneys *(See Chapter 5.)*

11.2.1.15 Hearth Thickness. The minimum thickness of fireplace hearths shall be 4 in. (102 mm).

11.2.2 Seismic Reinforcing.

11.2.2.1 In Seismic Design Category A, B, or C, reinforcement is not required.

11.2.2.2 In structures of Seismic Design Category D, fireplaces with chimneys up to 40 in. (1016 mm) wide, four No. 4 continuous vertical bars, anchored in the foundation, shall be placed in the concrete, between wythes of solid masonry or within the cells of hollow unit masonry and grouted in accordance with ASTM C 476, *Standard Specification for Grout for Masonry*.

11.2.2.2.1 For fireplaces with chimneys greater than 40 in. (1016 mm) wide, two additional No. 4 vertical bars shall be provided for each additional 40 in. (1016 mm) in width or fraction thereof.

11.2.2.2.2 Vertical reinforcement shall be placed enclosed within ¼ in. (6.4 mm) ties or other reinforcing of equivalent net cross-sectional area, spaced not to exceed 18 in. (457 mm) on center in concrete, or placed in the bed joints of unit masonry at a minimum of every 18 in. (457 mm) of vertical height.

11.2.2.2.3 Two such ties shall be provided at each bend in the vertical bars.

11.2.2.2.4 In structures of Seismic Design Category E or F, masonry and concrete chimneys shall be reinforced in accordance with the requirements of Sections 43.1 through 43.8 of *NFPA 5000, Building Construction and Safety Code*.

11.2.3 Seismic Anchorage.

11.2.3.1 In Seismic Design Category A, B, or C, seismic anchorage is not required.

11.2.3.2 In structures of Seismic Category D, masonry and concrete chimneys shall be anchored at each floor, ceiling, or roof line more than 6 ft (1.8 m) above grade except where constructed completely within the exterior walls.

11.2.3.3 Two 3⁄16 in. by 1 in. (4.8 mm by 25.4 mm) straps shall be embedded a minimum of 12 in. (305 mm) into the chimney.

11.2.3.3.1 Straps shall be hooked around the outer bars and extend 6 in. (152 mm) beyond the bend.

11.2.3.3.2 Each strap shall be fastened to a minimum of four floor joists with two ½ in. (12.7 mm) bolts.

11.2.4 Steel Fireplace Units.

11.2.4.1 Steel fireplace units incorporating a firebox liner of not less than ¼ in. (6.4 mm) thick steel and an air chamber shall be installed with masonry to provide a total thickness at the back and sides of not less than 8 in. (203 mm), not less than 4 in. (102 mm) of which shall be solid masonry.

11.2.4.2 Listed firebox liners shall be installed in accordance with the terms of the listing.

11.2.4.3 Warm-air ducts employed with steel fireplace units of the circulating air type shall be constructed of metal or masonry.

11.2.5 Clearance.

11.2.5.1 All wood beams, joists, studs, and other combustible material shall have a clearance to masonry fireplaces as follows:

(1) Not less than 2 in. (51 mm) from the front faces and sides
(2) Not less than 4 in. (102 mm) from the back faces of masonry fireplaces *(See Figure 11.2.5.1.)*

11.2.5.2 Spaces between headers or trimmers of combustible material and masonry fireplaces shall be firestopped with one of the following noncombustible materials:

(1) Galvanized steel not less than 26 gauge [0.019 in. (0.483 mm)] in thickness
(2) Noncombustible sheet material not more than ½ in. (12.7 mm) thick

11.2.5.3 Woodwork, such as wood trim, mantels, and other combustible material, shall not be placed within 6 in. (152 mm) of a fireplace opening.

11.2.5.4 Combustible material above and projecting more than 1½ in. (38 mm) from a fireplace opening shall not be placed less than 12 in. (305 mm) from the top of the fireplace opening. *(See Figure 11.2.5.4.)*

11.2.6 Accessibility. For cleaning purposes, means shall be provided for access to the venting area above and immediately behind any movable damper valve plate in masonry fireplaces and steel fireplace units by one of the following methods:

(1) A damper plate that can be removed with common hand tools
(2) A cleanout opening located to provide access to the smoke chamber area

Copyright National Fire Protection Association
Provided by IHS under license with NFPA
No reproduction or networking permitted without license from IHS
Not for Resale

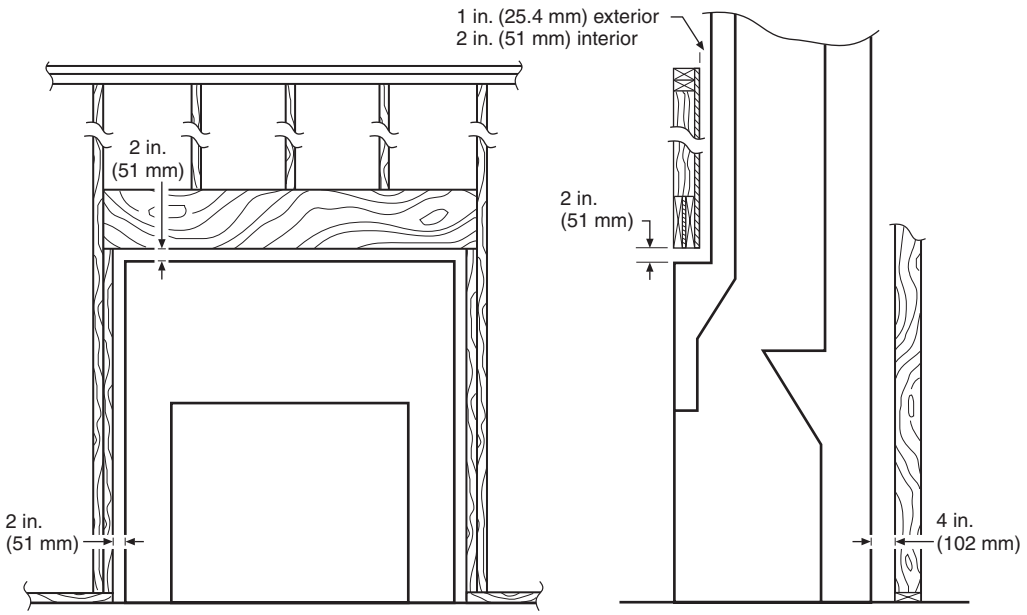

FIGURE 11.2.5.1 Fireplace Clearance to Combustible Material.

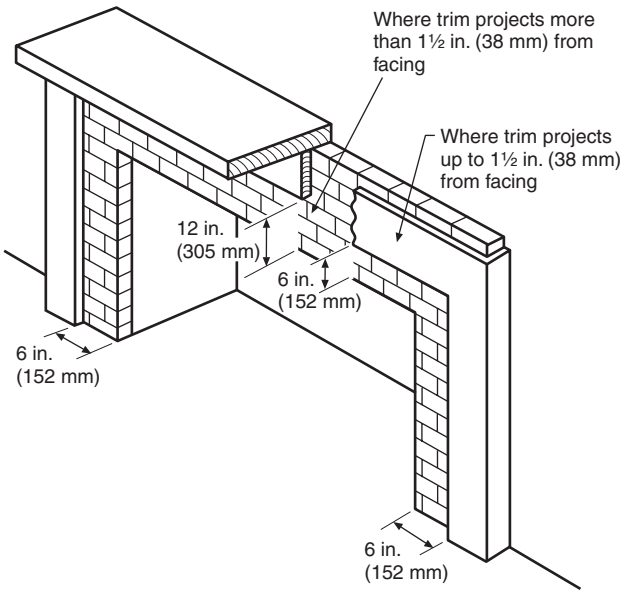

FIGURE 11.2.5.4 Fireplace Clearance to Combustible Material.

11.2.7 Cleanout Openings. Cleanout openings shall be equipped with ferrous metal, stainless steel, precast cement, or other approved noncombustible doors and frames arranged to remain tightly closed and secured when not in use.

11.2.8 Ash Dumps. Cleanouts, if provided, shall be accessible and located so that ash removal will not create a hazard to combustible materials.

11.2.9 Dampers.

11.2.9.1 Masonry fireplaces shall be equipped with a ferrous metal damper located at least 8 in. (203 mm) above the top of the fireplace opening.

11.2.9.2 Dampers shall be installed in the fireplace or at the top of the flue venting the fireplace and shall be operable from the room containing the fireplace.

11.2.9.3 A nonferrous metal damper shall be permitted to be installed at the top of the flue specified in 11.2.9.2.

11.2.9.4 Damper controls shall be permitted to be located in the fireplace.

11.3 Hearth Extensions.

11.3.1 Masonry fireplaces shall have hearth extensions of brick, concrete, stone, tile, or other approved noncombustible material wholly supported by and integral with the chimney structure, and a minimum 4 in. (102 mm) clearance shall be maintained directly below the underside.

11.3.1.1 Support for the hearth shall be provided by a structural slab or corbeled brickwork.

11.3.1.2 Wooden forms used during the construction of the hearth and hearth extension shall be removed when the construction is completed.

11.3.2 The minimum thickness of hearth extension shall be 2 in. (51 mm).

11.3.3 Where the fireplace opening is less than 6 ft^2 (0.56 m^2), the hearth extension shall extend as follows:

(1) At least 16 in. (406 mm) in front of the facing material
(2) At least 8 in. (203 mm) beyond each side of the fireplace opening *(See Figure 11.3.3.)*

11.3.4 Where the fireplace opening is 6 ft^2 (0.56 m^2) or larger, the hearth extension shall extend as follows:

(1) At least 20 in. (508 mm) in front of the facing material
(2) At least 12 in. (305 mm) beyond each side of the fireplace opening *(See Figure 11.3.3.)*

Copyright National Fire Protection Association
Provided by IHS under license with NFPA
No reproduction or networking permitted without license from IHS
Not for Resale

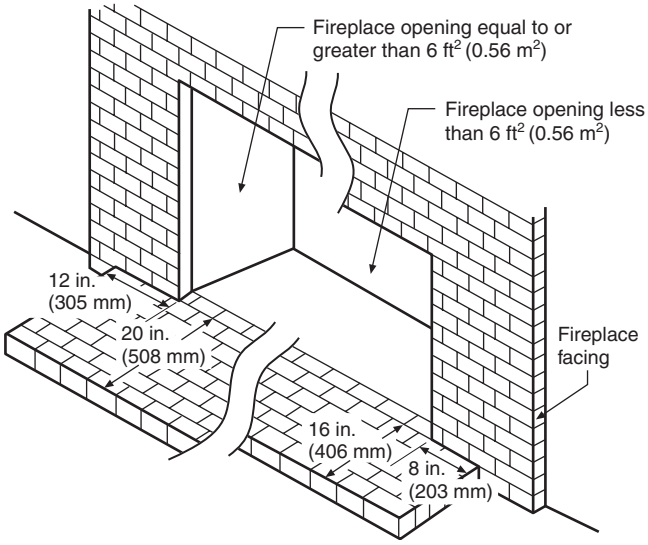

FIGURE 11.3.3 Fireplace Hearth Extension Requirements.

11.3.5 Where a fireplace is elevated above or overhangs a floor, the hearth extension also shall extend over the area under the fireplace.

11.4* Accessories. Fireplace accessories shall be one of the following:

(1) Listed and installed in accordance with the terms of their listing
(2) Acceptable to the AHJ and installed as approved and in accordance with the manufacturer's installation instructions

11.5 Combustion Air Ducts.

11.5.1 Where required by the AHJ, combustion air ducts shall be installed in accordance with this section.

11.5.1.1 Combustion air ducts for factory-built fireplaces shall be a listed component of the fireplace and shall be installed according to the manufacturer's instructions.

11.5.1.2 Listed combustion air duct systems for masonry fireplaces shall be installed according to the terms of their listing and the manufacturers' instructions.

11.5.2 Combustion air ducts shall extend as directly as practicable from the outdoors (inlet) to a termination outside the fire chamber (outlet).

11.5.3 Combustion air ducts shall be constructed of one of the following:

(1) Masonry
(2) Galvanized steel with a thickness not less than 26 gauge [0.019 in. (0.483 mm)]
(3) Other approved noncombustible material

11.5.4 Combustion air ducts shall be equipped with a damper that is capable of being fully closed.

11.5.5 Combustion air ducts that terminate outside the fire chamber but within 6 in. (152 mm) of the fire chamber shall be designed and installed to prevent the direct entry of flame, embers, or ashes from the fire chamber into the duct.

11.5.6 Unlisted combustion air ducts shall be installed with a minimum 1 in. (25.4 mm) clearance to combustibles for all parts of the duct construction within 5 ft (1.53 m) of the duct outlet.

11.5.7 The exterior inlet of the combustion air duct shall be screened.

11.5.8 Combustion air ducts shall not originate in any of the following:

(1) Attic
(2) Basement
(3) Garage
(4) Other interior space

Chapter 12 Solid Fuel–Burning Appliances

12.1 Appliances. Solid fuel–burning appliances shall be one of the following:

(1) Listed and installed in accordance with the terms of their listing and this chapter
(2) Approved by the AHJ

12.1.1 Unlisted appliances approved by the AHJ shall be installed as follows:

(1) In accordance with the manufacturer's instructions
(2) As specified in this chapter

12.1.2 The requirements in 12.1.1 shall not apply to mobile home installations.

12.2 Location of Appliances.

12.2.1* Every appliance shall be located with respect to building construction and other equipment to allow access to the appliance.

12.2.2 Solid fuel–burning appliances shall not be installed in alcoves or enclosed spaces less than 512 ft^3 (14.5 m^3) unless specifically listed for such use.

12.2.2.1 Solid fuel–burning appliances listed for installation in enclosed spaces or alcoves less than 512 ft^3 (14.5 m^3) shall be installed in accordance with the requirements of the listing and the manufacturer's instructions.

12.2.2.2 The space or room shall be sized to allow circulation of heated air.

12.2.2.3 Appliances shall be so located as not to interfere with the circulation of air within the heated space.

12.2.3 Solid fuel–burning appliances shall not be installed in any location where gasoline or any other flammable vapors or gases are present.

12.2.4 Solid fuel–burning appliances shall not be installed in any garage.

12.3 Air for Combustion and Ventilation.

12.3.1 Solid fuel–burning appliances shall be installed in a location and manner so as to provide ventilation and combustion air supply to allow proper combustion of fuel, chimney draft, and maintenance of safe temperatures.

12.3.2 Where buildings are so tight that normal infiltration does not provide the necessary air, outside air shall be introduced.

Copyright National Fire Protection Association
Provided by IHS under license with NFPA
No reproduction or networking permitted without license from IHS
Not for Resale

12.4 Chimney Connections and Usage.

12.4.1 Chimney Connection. All solid fuel–burning appliances shall be connected to chimneys in accordance with Chapter 9.

12.4.1.1 The chimney provided shall be in accordance with Table 5.2.2.1.

12.4.1.2 Galvanized steel pipe shall not be used for solid fuel–burning appliances.

12.4.2 Clearance. The clearance of chimney connectors to combustible material shall be in accordance with Table 9.5.1.1.

12.4.3 Inspection and Cleaning Access. Connectors and chimneys for solid fuel–burning appliances shall be designed, located, and installed to allow access for internal inspection and cleaning.

12.4.4* Flue Cross-Sectional Area. For residential-type, natural draft solid fuel–burning appliances, the flue shall meet the following conditions:

(1) The cross-sectional area of the flue shall not be less than the cross-sectional area of the appliance flue collar, unless specified by the appliance manufacturer.
(2) The cross-sectional area of the flue of a chimney with no walls exposed to the outside below the roofline shall not be more than three times the cross-sectional area of the appliance flue collar.
(3) The cross-sectional area of the flue of a chimney with one or more walls exposed to the outside below the roofline shall not be more than two times the cross-sectional area of the appliance flue collar.

12.4.5 Connection to Masonry Fireplaces.

12.4.5.1 A natural draft solid fuel–burning appliance such as a stove or insert shall be permitted to use a masonry fireplace flue where the following conditions are met:

(1) There is a connector that extends from the appliance to the flue liner.
(2) Any unexposed metal that is used as a connector and is exposed to flue gases is constructed of stainless steel or other equivalent material that resists corrosion, softening, or cracking from flue gases at temperatures up to 1800°F (982°C).
(3) The cross-sectional area of the flue is no smaller than the cross-sectional area of the flue collar of the appliance, unless otherwise specified by the appliance manufacturer.
(4)*The cross-sectional area of the flue of a chimney with no walls exposed to the outside below the roofline is no more than three times the cross-sectional area of the appliance flue collar.
(5) The cross-sectional area of the flue of a chimney with one or more walls exposed to the outside below the roofline is no more than two times the cross-sectional area of the appliance flue collar.
(6) If the appliance vents directly through the chimney wall above the smoke chamber, there is a noncombustible seal below the entry point of the connector.
(7) The installation is such that the chimney system can be inspected and cleaned.
(8) Means are provided to prevent dilution of combustion products in the chimney flue with air from the habitable space.

12.4.5.2 Listed fireplace accessories shall be permitted to use a masonry fireplace flue in accordance with their listing.

12.4.6 Existing Flue Use. Another solid fuel–burning appliance shall not be installed using an existing flue serving a factory-built fireplace unless the appliance is specifically listed for such installation.

12.5 Mounting.

12.5.1 Mounting for Residential-Type Appliances.

12.5.1.1 General Requirements.

12.5.1.1.1 Residential-type solid fuel–burning appliances that are tested and listed by a recognized testing laboratory for installation on floors constructed of combustible materials shall be placed on floors in accordance with the requirements of the listing and the conditions of approval.

12.5.1.1.2 Appliances that are not listed by a recognized testing laboratory shall be provided with floor protection in accordance with the provisions of 12.5.1.2 or 12.5.1.3.

12.5.1.1.3 Residential-type solid fuel–burning appliances shall be permitted to be placed without floor protection in any of the following manners:

(1) On concrete bases adequately supported on compacted soil, crushed rock, or gravel
(2) On concrete slabs or masonry arches that do not have combustible materials attached to the underside
(3) On approved assemblies constructed of only noncombustible materials and having a fire resistance rating of not less than 2 hours, with floors constructed of noncombustible material
(4) On properly stabilized ground that can support the load of the appliance

12.5.1.1.4 Any floor assembly, slab, or arch shall extend not less than 18 in. (457 mm) beyond the appliance on all sides.

12.5.1.1.5 In lieu of the requirements for floor protection specified herein, a floor protector listed by a recognized testing laboratory and installed in accordance with the installation instructions shall be permitted to be employed.

12.5.1.1.6 Concrete bases, concrete slabs, masonry arches, and floor–ceiling assemblies and their supports shall be designed and constructed to support the appliances.

12.5.1.2 Room Heaters, Fireplace Stoves, Room Heater/Fireplace Stove Combinations, and Ranges.

12.5.1.2.1 Room heaters, fireplace stoves, room heater/fireplace stove combinations, or ranges that are set on legs or pedestals that provide not less than 6 in. (152 mm) of ventilated open space beneath the fire chamber or base of the appliance shall be permitted to be placed on floors of combustible construction, provided the following conditions exist:

(1) The floor under the appliance is protected with closely spaced solid masonry units not less than 2 in. (51 mm) in thickness.
(2) The top surface of the masonry is covered with sheet metal not less than 24 gauge [0.024 in. (0.61 mm)].
(3) The floor protection extends not less than 18 in. (457 mm) beyond the appliance on all sides.

12.5.1.2.2 Room heaters, fireplace stoves, room heater/fireplace stove combinations, or ranges that are set on legs or pedestals providing 2 in. to 6 in. (51 mm to 152 mm) of ventilated open space beneath the fire chamber or base of the appliance shall be permitted to be placed on floors of combustible construction, provided the following conditions exist:

(1) The floor under the appliance is protected with one course of hollow masonry units not less than 4 in. (102 mm) in nominal thickness.

Copyright National Fire Protection Association
Provided by IHS under license with NFPA
No reproduction or networking permitted without license from IHS
Not for Resale

(2) The masonry units are laid with ends unsealed and joints matched in such a way as to provide free circulation of air through the core spaces of the masonry.
(3) The top surface of the masonry is covered with sheet metal not less than 24 gauge [0.024 in. (0.61 mm)].
(4) The floor protection extends not less than 18 in. (457 mm) beyond the appliance on all sides.

12.5.1.2.3 Room heaters, fireplace stoves, room heater/fireplace stove combinations, or ranges with legs or pedestals that provide less than 2 in. (51 mm) of ventilated open space beneath the fire chamber or base of the appliance shall not be placed on floors of combustible construction.

12.5.1.3 Furnaces and Boilers.

12.5.1.3.1 Furnaces or boilers with legs or pedestals that provide not less than 6 in. (152 mm) of ventilated open space beneath the fire chamber or base of the appliance shall be permitted to be placed on floors of combustible construction, provided the floor under the appliance has the following characteristics:

(1) It is protected with one course of hollow masonry units not less than 4 in. (102 mm) in thickness.
(2) The masonry units are laid with ends unsealed and joints matched in such a way as to provide free circulation of air through the core spaces of the masonry.
(3) The top surface of the masonry is covered with a steel plate not less than 3⁄16 in. (4.8 mm) in thickness.
(4) The floor protection extends not less than 18 in. (457 mm) beyond the appliance on all sides.

12.5.1.3.2 Furnaces or boilers that are set on legs or pedestals that provide 2 in. to 6 in. (51 mm to 152 mm) of ventilated open space beneath the fire chamber or base of the appliance shall be permitted to be placed on floors of combustible construction, provided the floor under the appliance has the following characteristics:

(1) It is protected with two courses of hollow masonry units, each not less than 4 in. (102 mm) in thickness.
(2) The masonry units are laid with ends unsealed and joints matched in such a way as to provide free circulation of air through the core spaces of the masonry.
(3) The top surface of the masonry is covered with a steel plate not less than 3⁄16 in. (4.8 mm) in thickness.
(4) The floor protection extends not less than 18 in. (457 mm) beyond the appliance on all sides.

12.5.1.3.3 Furnaces or boilers with legs or pedestals that provide less than 2 in. (51 mm) of ventilated open space beneath the fire chamber or base of the appliance shall not be placed on floors of combustible construction.

12.5.2 Mounting for Low-Heat Nonresidential Appliances.

12.5.2.1 Low-heat nonresidential solid fuel–burning appliances that have been tested and listed by a recognized testing laboratory for placement on floors constructed with a combustible material shall be placed on floors in accordance with the requirements of the listing and conditions of approval.

12.5.2.1.1 Appliances that are not listed by a recognized testing laboratory shall be provided with floor protection in accordance with the provisions of 12.5.2.3 or 12.5.2.4.

12.5.2.1.2 Low-heat nonresidential solid fuel–burning appliances shall be permitted to be placed without floor protection in any of the following manners:

(1) On floors constructed of noncombustible materials that have a fire resistance rating of not less than 2 hours and that extend not less than 18 in. (457 mm) beyond the appliance on all sides
(2) On concrete bases adequately supported on compacted soil, crushed rock, or gravel
(3) On properly stabilized ground that can support the load of the appliance

12.5.2.2 Concrete bases, concrete slabs, and floors shall be designed and constructed to support the appliances.

12.5.2.3 Low-heat nonresidential solid fuel–burning appliances that are set on legs or pedestals that provide not less than 18 in. (457 mm) of ventilated open space beneath the fire chamber or base of the appliance shall be permitted to be placed on floors of combustible construction, provided the following conditions exist:

(1) The floor under the appliance is protected with one course of hollow masonry units not less than 4 in. (102 mm) in thickness.
(2) The masonry units are laid with ends unsealed and joints matched in such a way as to provide free circulation of air through the core spaces of the masonry.
(3) The top surface of the masonry is covered with a steel plate not less than 3⁄16 in. (4.8 mm) in thickness.
(4) The floor protection extends not less than 18 in. (457 mm) beyond the appliance on all sides.

12.5.2.4 Low-heat nonresidential solid fuel–burning appliances that are set on legs or pedestals that provide 6 in. to 18 in. (152 mm to 457 mm) of ventilated open space beneath the fire chamber or base of the appliance shall be permitted to be placed on floors of combustible construction, provided the following conditions exist:

(1) The floor under the appliance is protected with two courses of hollow masonry units, each not less than 4 in. (102 mm) in thickness.
(2) The masonry units are laid with ends unsealed and joints matched in such a way as to provide free circulation of air through the core spaces of the masonry.
(3) The top surface of the masonry is covered with a steel plate not less than 3⁄16 in. (4.8 mm) in thickness.
(4) The floor protection extends not less than 18 in. (457 mm) beyond the appliance on all sides.

12.5.2.5 Low-heat nonresidential solid fuel–burning appliances with legs or pedestals that provide less than 6 in. (152 mm) of ventilated open space beneath the fire chamber or base of the appliance shall not be placed on floors of combustible construction.

12.5.3 Mounting for Medium-Heat Nonresidential Appliances.

12.5.3.1 Medium-heat nonresidential solid fuel–burning appliances that have been tested and listed by a recognized testing laboratory for placement on floors constructed with a combustible material shall be placed on floors in accordance with the requirements of the listing and conditions of approval.

12.5.3.1.1 Appliances that are not listed by a recognized testing laboratory shall be provided with floor protection in accordance with the provisions of 12.5.3.3 or 12.5.3.4.

12.5.3.1.2 Medium-heat nonresidential solid fuel–burning appliances shall be permitted to be placed without floor protection in any of the following manners:

Copyright National Fire Protection Association
Provided by IHS under license with NFPA
No reproduction or networking permitted without license from IHS
Not for Resale

(1) On concrete bases adequately supported on compacted soil, crushed rock, or gravel
(2) On floors constructed of noncombustible materials that have a fire resistance rating of not less than 2 hours and that extend not less than 3 ft (0.92 m) beyond the appliance on all sides and 8 ft (2.45 m) beyond the front or side where ashes are removed
(3) On properly stabilized ground that can support the load of the appliance

12.5.3.2 Concrete bases, concrete slabs, and floors shall be designed and constructed to support the appliances.

12.5.3.3 Medium-heat nonresidential solid fuel–burning appliances that are set on legs or pedestals that provide not less than 24 in. (610 mm) of ventilated open space beneath the fire chamber or base of the appliance shall be permitted to be placed on floors of combustible construction, provided the floor under the appliance has the following characteristics:

(1) It is protected with one course of hollow masonry units not less than 4 in. (102 mm) in thickness.
(2) The masonry units are laid with ends unsealed and joints matched in such a way as to provide free circulation of air through the core spaces of the masonry.
(3) The top surface of the masonry is covered with a steel plate not less than 3⁄16 in. (4.8 mm) in thickness.
(4) The floor protection extends not less than 3 ft (0.92 m) beyond the appliance on all sides and 8 ft (2.45 m) beyond the front or side where ashes are removed.

12.5.3.4 Medium-heat nonresidential solid fuel–burning appliances that are set on legs or pedestals that provide 18 in. to 24 in. (457 mm to 610 mm) of ventilated open space beneath the fire chamber or base of the appliance shall be permitted to be placed on floors of combustible construction, provided the floor under the appliance has the following characteristics:

(1) It is protected with two courses of hollow masonry units, each not less than 4 in. (102 mm) in thickness.
(2) The masonry units are laid with ends unsealed and joints matched in such a way as to provide free circulation of air through the core spaces of the masonry.
(3) The top surface of the masonry is covered with a steel plate not less than 3⁄16 in. (4.8 mm) in thickness.
(4) The floor protection extends not less than 3 ft (0.92 m) beyond the appliance on all sides and 8 ft (2.45 m) beyond the front or side where ashes are removed.

12.5.3.5 Medium-heat nonresidential solid fuel–burning appliances with legs or pedestals that provide less than 18 in. (457 mm) of ventilated open space beneath the fire chamber or base of the appliance shall not be placed on floors of combustible construction.

12.5.4 Mounting of High-Heat Nonresidential Appliances.

12.5.4.1 High-heat nonresidential solid fuel–burning appliances shall be placed in one of the following manners:

(1) On concrete bases adequately supported on compacted soil, crushed rock, or gravel
(2) On floors constructed of noncombustible materials that have a fire resistance rating of not less than 2 hours and that extend not less than 10 ft (3.1 m) beyond the appliance on all sides and not less than 30 ft (9.2 m) beyond the front or side where hot products are removed
(3) On properly stabilized ground that can support the load of the appliance

12.5.4.2 Concrete bases and floors shall be designed and constructed to support the appliances.

12.5.4.3 High-heat nonresidential solid fuel–burning appliances shall not be placed on floors of combustible construction.

12.6 Clearances from Solid Fuel–Burning Appliances.

12.6.1 The clearance shall be not less than specified in Table 12.6.1.

12.6.1.1 Appliances listed for installation with clearances less than specified in Table 12.6.1 shall be permitted to be installed in accordance with the terms of their listing and the manufacturer's instructions.

12.6.1.2 Heating furnaces and boilers and water heaters specifically listed for installation in spaces such as alcoves shall be permitted to be so installed in accordance with the terms of their listing, provided the specified clearance is maintained regardless of whether the enclosure is of combustible or noncombustible material.

12.6.1.3 These clearances shall apply to appliances installed in rooms that are large in comparison with the size of the appliances.

12.6.2 Clearance Reduction.

12.6.2.1 Clearances from listed and unlisted solid fuel–burning appliances to combustible material shall be permitted to be reduced if the combustible material is protected as described in Table 12.6.2.1 and in Figure 12.6.2.1(a) through Figure 12.6.2.1(f).

12.6.2.1.1 Where the required clearance with no protection is 36 in. (914 mm), the clearances in Table 12.6.2.1 shall be the minimum allowable clearances. For other required clearances with no protection, minimum allowable clearance shall be calculated from maximum allowable reduction.

12.6.2.1.2 Unless the appliance is specifically listed for lesser clearance, the clearance after reduction shall be not less than the following:

(1) 12 in. (305 mm) to combustible walls
(2) 18 in. (457 mm) to combustible ceilings

12.6.2.1.3 Spacers and ties shall be of noncombustible material. No spacers or ties shall be used directly behind appliance or conductor.

12.6.2.1.4 With all clearance reduction systems using a ventilated air space, adequate air circulation shall be provided as described in 12.6.2.4. There shall be at least 1 in. (25.4 mm) between the clearance reduction system and combustible walls and ceilings for clearance reduction systems using a ventilated air space.

12.6.2.1.5 Mineral wool batts (blanket or board) shall have a minimum density of 8 lb/ft^3 (128.7 kg/m^3) and have a minimum melting point of 1500°F (816°C).

12.6.2.1.6 Insulation material used as part of clearance reduction system shall have a thermal conductivity of 1.0 Btu-in./hr-ft^2-°F (4.88 kg-cal/hr-m^2-°C) or less. Insulation board shall be formed of noncombustible material.

12.6.2.1.7 If a single-wall connector passes through a masonry wall used as a wall shield, there shall be at least ½ in. (13 mm) of open, ventilated air space between the connector and the masonry.

Copyright National Fire Protection Association
Provided by IHS under license with NFPA
No reproduction or networking permitted without license from IHS
Not for Resale

Table 12.6.1 Standard Clearances for Solid Fuel–Burning Appliances

Type of Appliance	Above Top of Casing or Appliance; Above Top and Sides of Furnace Plenum or Bonnet		From Front		From Back[a]		From Sides[a]	
	in.	mm	in.	mm	in.	mm	in.	mm
Residential Appliances Steam boilers — 15 psi (103 kPa) Water boilers — 250°F (121°C) max. Water boilers — 200°F (93°C) max. All water walled or jacketed appliances	6	152	48	1219	6[b]	152[b]	6[b]	152[b]
Furnaces								
Gravity and forced air[c]	18	457	48	1219	18	457	18	457
Room Heaters, Fireplace Stoves, Room Heater/Fireplace Stove Combinations, Ranges	36	914	36	914	36	914	36	914
					Firing Side		**Opposite Side**	
Lined fire chamber	30[d]	762[d]	36	914	24	610	18	457
Unlined fire chamber	30[d]	762[d]	36	914	36	914	18	457

[a] Provisions for fuel storage shall be located at least 36 in. (914 mm) from any side of the appliance.
[b] Adequate clearance for cleaning and maintenance shall be provided.
[c] For clearances from air ducts, see NFPA 90B, *Standard for the Installation of Warm Air Heating and Air-Conditioning Systems.*
[d] Clearance to combustible material or metal cabinets. If the underside of such combustible material or metal cabinet is protected with sheet metal of not less than 24 gauge [0.024 in. (0.61 mm)], spaced out 1 in. (25.4 mm), the distance shall be permitted to be reduced to not less than 24 in. (610 mm).

Table 12.6.2.1 Reduction of Appliance Clearance with Specified Forms of Protection

Clearance Reduction Applied to and Covering All Combustible Surfaces Within the Distance Specified as Required Clearance with No Protection*	Maximum Allowable Reduction in Clearance (%)		Minimum Clearance: As Wall Protector		Minimum Clearance: As Ceiling Protector	
	As Wall Protector	As Ceiling Protector	in.	mm	in.	mm
(a) 3½ in. (90 mm) thick masonry wall without ventilated air space	33	—	24	610	—	—
(b) ½ in. (13 mm) thick noncombustible insulation board over 1 in. (25.4 mm) glass fiber or mineral wool batts without ventilated air space	50	33	18	457	24	610
(c) 0.024 in. (0.61 mm), 24 gauge sheet metal over 1 in. (25.4 mm) glass fiber or mineral wool batts reinforced with wire or equivalent on rear face with ventilated air space	66	50	12	305	18	457
(d) 3½ in. (90 mm) thick masonry wall with ventilated air space	66	—	12	305	—	—
(e) 0.024 in. (0.61 mm), 24 gauge sheet metal with ventilated air space	66	50	12	305	18	457
(f) ½ in. (13 mm) thick noncombustible insulation board with ventilated air space	66	50	12	305	18	457
(g) 0.024 in. (0.61 mm), 24 gauge sheet metal with ventilated air space over 0.024 in. (0.61 mm), 24 gauge sheet metal with ventilated air space	66	50	12	305	18	457
(h) 1 in. (25.4 mm) glass fiber or mineral wool batts sandwiched between two sheets 0.024 in. (0.61 mm), 24 gauge sheet metal with ventilated air space	66	50	12	305	18	457

Notes:
(1) All clearances and thicknesses are minimums; larger clearances and thicknesses are permitted.
(2) To calculate the minimum allowable clearance, the following formula can be used: $C_{pr} = C_{un} \times [1 - (R/100)]$, where C_{pr} is the minimum allowable clearance, C_{un} is the required clearance with no protection, and R is the maximum allowable reduction in clearance.
(3) Refer to Figure 12.6.2.1(e) and Figure 12.6.2.1(f) for other reduced clearances using materials found in this table.
*See 12.6.1 through 12.6.1.3.

Copyright National Fire Protection Association
Provided by IHS under license with NFPA
No reproduction or networking permitted without license from IHS
Not for Resale

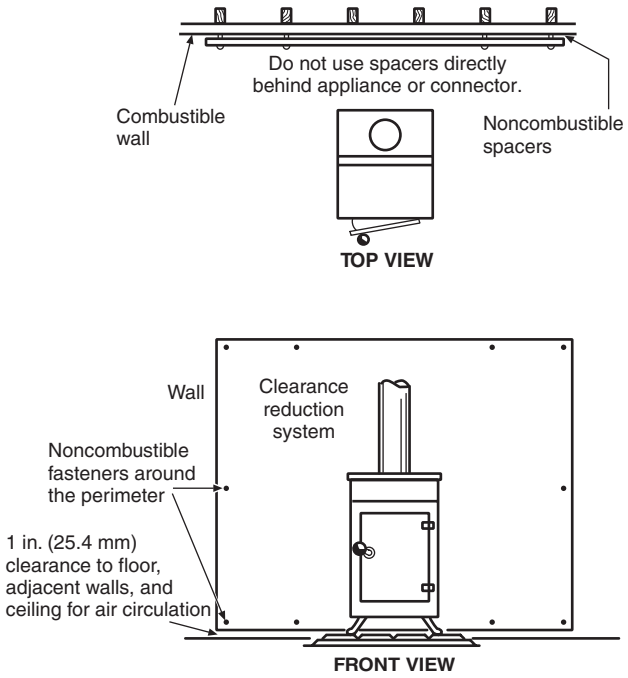

FIGURE 12.6.2.1(a) Clearance Reduction System — Fastener Location.

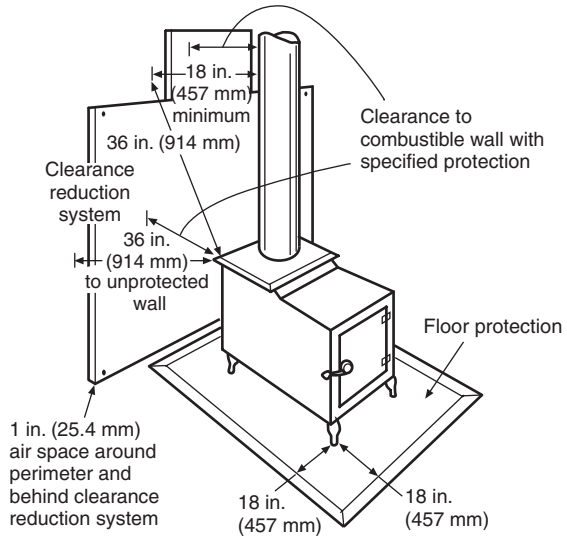

FIGURE 12.6.2.1(b) Distance to Combustible Wall/Floor.

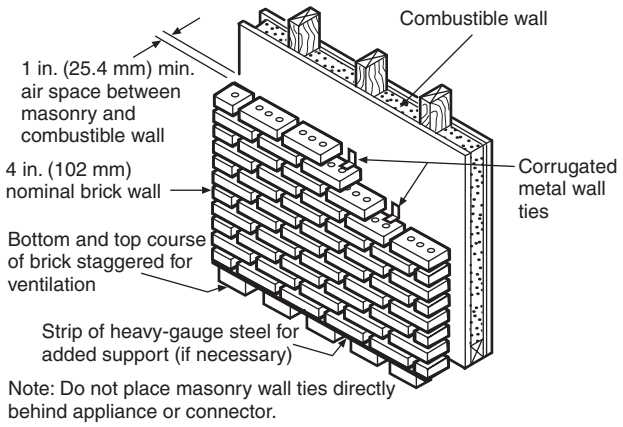

FIGURE 12.6.2.1(c) Masonry Clearance Reduction System.

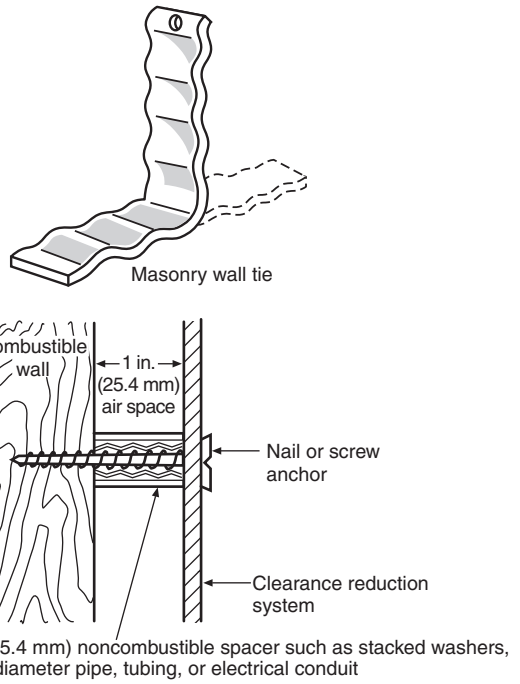

Notes:

(1) Masonry walls can be attached to combustible walls using wall ties.

(2) Do not use spacers directly behind appliance or connector.

FIGURE 12.6.2.1(d) Fastener Detail.

12.6.2.1.8 There shall be at least 1 in. (25.4 mm) between the appliance and the protector. In no case shall the clearance between the appliance and the wall surface be reduced below that allowed in Table 12.6.2.1.

12.6.2.1.9 Clearances in front of the loading door, ash removal door, or both of the appliance shall not be reduced from those in Section 12.5.

12.6.2.2 Clearances from solid fuel–burning appliances to combustible material shall be permitted to be reduced, provided the combustible material is protected by an engineered protection system acceptable to the AHJ.

12.6.2.2.1 Engineered systems installed for the protection of combustible material shall reduce the temperature of such materials to 90°F (50°C) rise above ambient.

12.6.2.2.2 System design shall be based on applicable heat transfer principles, taking into account the following:

(1) The geometry of the system

--`,,```,,,,````-`-`,,`,,`,`,,`---

Copyright National Fire Protection Association
Provided by IHS under license with NFPA
No reproduction or networking permitted without license from IHS
Not for Resale

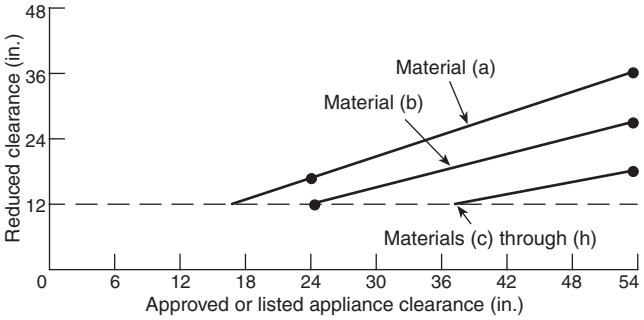

For SI units: 1 in. = 25.4 mm.

FIGURE 12.6.2.1(e) Wall Protection Using Materials in Table 12.6.2.1.

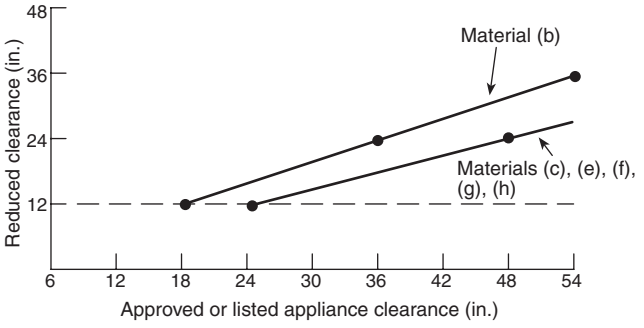

Notes:

(1) Materials (a) and (d) are not expected to be used as ceiling protection.

(2) For SI units: 1 in. = 25.4 mm.

FIGURE 12.6.2.1(f) Ceiling Protection Using Materials in Table 12.6.2.1.

(2) The heat loss characteristics of the structure behind the combustible material
(3) The possible abnormal operating conditions of the heat-producing sources

12.6.2.3 The following shall apply to clearances from solid fuel–burning appliances to combustible material:

(1) They shall be permitted to be reduced by the use of materials or products listed for protection purposes.
(2) Materials and products listed for the purpose of reducing clearance to combustibles shall be installed in accordance with the conditions of the listing and the manufacturer's instructions.

12.6.2.4 For clearance reduction systems using an air space between the combustible wall and the wall protector, adequate air circulation shall be provided by one of the methods outlined in 12.6.2.4.1 through 12.6.2.4.3 and illustrated in Figure 12.6.2.4.

12.6.2.4.1 Air circulation shall be permitted to be provided by leaving all edges of the wall protector open with at least a 1 in. (25.4 mm) air gap.

12.6.2.4.2 If the wall protector is mounted on a single flat wall away from corners, air circulation shall be permitted to be provided by leaving only the bottom and top edges or only the side and top edges open with at least a 1 in. (25.4 mm) air gap.

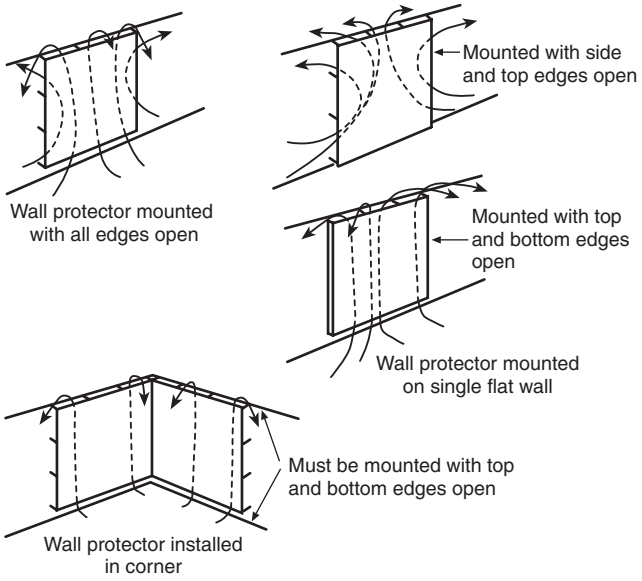

FIGURE 12.6.2.4 Air Circulation Methods.

12.6.2.4.3 Wall protectors that cover two walls in a corner shall be open at the bottom and top edges with at least a 1 in. (25.4 mm) air gap.

12.6.2.5 All clearances shall be measured from the outer surface of the combustible material to the nearest point on the surface of the solid fuel–burning appliance, disregarding any intervening protection applied to the combustible material.

12.6.2.6 All clearances provided between solid fuel–burning appliances and combustible materials shall be large enough to maintain sufficient clearances between chimney connectors and combustible material as required in Section 9.5.

12.7 Accessories.

12.7.1 Factory-built accessories for solid fuel–burning appliances such as heat exchangers, stove mats, floor pads, and protection shields shall be listed and shall be installed in accordance with the terms of their listing.

12.7.2 Unlisted accessories that are acceptable to the AHJ shall be permitted to be installed in accordance with the approval of the AHJ and the appliance and accessory manufacturers' installation instructions.

Chapter 13 Maintenance

13.1 Initial Installation. Initial installation of chimneys, fireplaces, and vents shall allow inspection of the surroundings to determine that the required clearances have been maintained and that correct provisions for support, stabilization, future inspection, and maintenance are in place.

13.2 Annual Inspection. Chimneys, fireplaces, and vents shall be inspected at least once a year in accordance with the requirements of Section 14.3.

Exception: Type B and Type BW gas venting systems.

Copyright National Fire Protection Association
Provided by IHS under license with NFPA
No reproduction or networking permitted without license from IHS
Not for Resale

13.2.1 Cleaning, maintenance, and repairs shall be done if necessary.

13.3 Inspection — Connections. Connectors, spark arresters, cleanouts, and tee fittings for chimneys and for oil and pellet venting systems shall be inspected at least once a year for soundness and deposits.

Exception: Connectors for Type B gas venting systems.

13.4 Appliance or Connector Replacement.

13.4.1 When an existing appliance or connector is replaced or a new appliance is connected to a chimney, the chimney flue shall be inspected in accordance with Chapter 14.

13.4.2 The chimney shall be cleaned, lined or relined, or repaired as necessary.

13.5 Cleanout Doors. After any inspection or maintenance operation, cleanout doors and caps or plugs for cleanout tee fittings shall be closed tightly or secured in place.

13.6 Cleaning Methods. Cleaning of chimneys, if necessary, shall be done by methods that do not impair structural or thermal performance.

13.7 Evidence of Damage.

13.7.1 Chimneys, vents, and fireplaces shall be inspected, cleaned, and repaired if there is any evidence of damage to the chimney, fireplace, or vent or to the surroundings.

13.7.2 Inspections required by 13.7.1 shall comply with the requirements for a Level II inspection in accordance with Section 14.5.

13.8 Operating Malfunction. When inspection or an operating malfunction shows that an existing chimney, fireplace, or vent is damaged, unsuitable, or improperly sized, it shall be repaired, rebuilt, or resized to the construction and functional requirements of this standard.

13.9* Damaged or Deteriorated Liners. If the flue liner in a chimney has softened, cracked, or otherwise deteriorated so that it no longer has the continued ability to contain the products of combustion (i.e., heat, moisture, creosote, and flue gases), the liner shall be either removed and replaced, repaired, or relined with a listed liner system or other approved material that will resist corrosion, softening, or cracking from flue gases at temperatures appropriate to the class of chimney service. *(See Table 5.2.2.1.)*

13.10 Unused Openings. Unused openings in chimney flues and chimney walls shall be sealed by solid masonry with a minimum thickness equal to that of the chimney flue and wall thickness or with a listed sealing device.

Chapter 14 Inspection of Existing Chimneys

14.1 Special Definitions.

14.1.1 Accessible. See 3.3.1.

14.1.2 Readily Accessible. See 3.3.1.1.

14.1.3 Non-Accessible, Concealed (for Inspections). See 3.3.113.

14.2* General. Inspections shall be conducted by a qualified agency.

14.2.1* Observations that are incidental to a chimney maintenance or repair task not shown in Table 14.3.1 shall not be required to comply with the minimum levels of inspection set forth in this chapter.

14.2.2 Defects that are observed during the course of such work shall be reported to the property owner, occupant, or responsible party.

14.3 Type of Inspection. The scope of the inspection, the areas of the chimney examined, and the degree of invasiveness of the inspection shall be appropriate for the conditions giving rise to the inspection.

14.3.1 The type of inspection shall be determined in accordance with Table 14.3.1.

14.3.2 The type of inspection performed shall be based on the circumstances that give rise to the inspection.

14.3.3 For situations shown in the Circumstances section of Table 14.3.1, the minimum level of inspection shall be that indicated by the column in which the situation is found.

14.3.4 For situations not shown in the Circumstances section, the type of inspection shall be based on the descriptions in the Indications section.

14.3.5 The following shall apply to examination of the chimney at a level higher than that indicated by Table 14.3.1:

(1) Nothing shall prevent the examination of all or part of the chimney at a higher level than the minimum indicated by Table 14.3.1.
(2) Partial examination of the chimney at a higher level shall not require that the entire inspection be conducted at that higher level.

14.4* Level I Inspections. A Level I inspection shall be utilized when verification of the suitability of the chimney or flue for continued service, under the same conditions and with the same or similar appliance or appliances, is needed.

14.4.1 Circumstances. A Level I inspection shall be conducted under the following circumstances:

(1) During annual inspections in accordance with Section 13.2
(2) During routine cleaning of a flue or flues within the chimney
(3) At the time of replacement of one or more connected appliances with an equal number of appliances of similar type, input rating, and efficiency, in accordance with Section 13.4
(4) At other times as indicated in Section 14.4

14.4.2 Scope and Access. Level I inspections shall include examination of readily accessible portions of the chimney and accessible portions of the connected appliance and chimney connection.

14.4.2.1 The following shall apply to the inspection of locations with panels, doors, or coverings:

(1) The chimney exterior and surroundings shall be inspected at locations that can be accessed without removal of panels, doors, or coverings.
(2) Where panels, doors, or coverings are opened as part of performance of another task, such as chimney cleaning, such locations shall be examined as part of a Level I inspection.

Copyright National Fire Protection Association
Provided by IHS under license with NFPA
No reproduction or networking permitted without license from IHS
Not for Resale

Table 14.3.1 Selection of Inspection Type

	Inspection Types		
Criteria	**Level I**	**Level II**	**Level III**
Scope	Readily accessible areas of chimney, structure, and flue; lack of obstruction or combustible deposits in flue; basic appliance installation and connection	All subjects of a Level I inspection; proper construction and condition of accessible portions of the chimney structure and all enclosed flues; proper clearances from combustibles in accessible locations; size and suitability of flues for connected appliances	All subjects of Level I and Level II inspections; proper construction and condition of concealed portions of chimney structure and enclosed flues; proper clearances from combustibles
Degree of Access Required	Readily accessible portions of chimney exterior and interior; accessible portions of appliance and chimney connection	All accessible portions of the chimney exterior and interior, including areas within accessible attics, crawl spaces, and basements, and accessible portions of the appliance and chimney connection; includes inspection by video scanning or other means	External and internal portions of chimney structure, including concealed areas of the building or chimney; includes removal of components of building or chimney where necessary, but only as necessary to gain access to areas that are the subject of the inspection
Circumstances	Annual inspection as required by Section 13.2; during routine cleaning of chimney flue; upon direct replacement of connected appliance with one of similar type, input rating, and efficiency	Upon addition or removal of one or more connected appliances or replacement of appliance with one of dissimilar type, input rating, or efficiency; prior to relining or replacement of flue lining; upon sale or transfer of the property; after operating malfunction or external event likely to have caused damage to the chimney	Where necessary for the investigation of an incident that has caused damage to the chimney or building; where a hazard detected or suspected as the result of a Level I or II inspection cannot be fully evaluated without access to concealed areas
Indications	For verification of suitability of the chimney for continued service, under the same conditions and with the same appliance or appliances	For verification of suitability of the chimney for new or changed conditions of service; Level I inspection not sufficient to determine serviceability of the chimney	When construction of all or part of chimney is deemed critical to its renewed or continued use; required only for those areas that cannot be properly evaluated by a Level I or Level II inspection

Note: The inspection is not required when the last connected appliance is removed and chimney use is discontinued.

14.4.2.2 Readily accessible areas of the chimney flue that can be observed through existing openings, such as a thimble, cleanout opening, or flue termination, shall be examined for the presence of a continuous flue liner, proper installation, and no damage or deterioration.

14.4.2.3 The following shall apply to inspection of flues:

(1) Where an inspection is conducted in accordance with Section 13.2, the inspection shall include all flues within the chimney and connected appliances.
(2) An inspection conducted during cleaning or appliance replacement shall include the flue or flues being cleaned and the appliance or appliances connected to each.

14.4.2.4 The inspection shall include verification that the flue or flues being inspected are free of combustible deposits and blockage or obstruction.

14.4.2.5 The connected appliance or appliances, their chimney connectors, and surroundings shall be examined for proper clearances, floor mounting and protection, damage or deterioration, and observable evidence of operating malfunction.

14.4.2.6 Chimney connector inspection shall meet the following criteria:

(1) Connectors shall be examined for proper support and fastening of joints, pitch, and securement to the chimney.
(2) Connectors shall be examined for damage, deterioration, internal blockage or obstruction, and freedom from combustible deposits.

14.4.2.7 Internal surfaces of fireplaces and smoke chambers shall be examined for damage and deterioration, combustible deposits, and evidence of operating malfunction.

14.4.2.7.1 Fireplace inserts, stoves, or accessories shall be removed from the fireplace as necessary to permit such examination.

14.4.2.7.2 The means of connecting a fireplace insert or stove to the chimney flue shall be examined for compliance with 12.4.5.

14.4.2.7.3* Fireplace inserts, stoves, or accessories shall not be required to be removed when the venting system can be thoroughly cleaned without such removal.

--`,,```,,,,````-`-`,,`,,`,`,,`---
Copyright National Fire Protection Association
Provided by IHS under license with NFPA
No reproduction or networking permitted without license from IHS
Not for Resale

14.5* Level II Inspections. A Level II inspection is indicated when verification of the suitability of the chimney for new or changed conditions of service is needed or when a Level I inspection is not sufficient to determine the serviceability of the chimney.

14.5.1 Circumstances. A Level II inspection shall be conducted under the following circumstances:

(1)*Upon addition or removal of one or more connected appliances or upon replacement of an appliance with one or more of dissimilar type, input rating, or efficiency, unless the last connected appliance is removed and chimney use will be discontinued
(2) Prior to relining of a flue or replacement of flue lining, in accordance with 7.1.10
(3) Upon sale or transfer of the property
(4) After a building or chimney fire, weather or seismic event, or other incident likely to have caused damage to the chimney
(5) At other times as indicated in Section 14.4

14.5.2 Scope and Access. Level II inspections shall include all accessible portions of the chimney exterior and interior, including the following:

(1) Areas within accessible attics, crawl spaces, and basements
(2) Accessible portions of the appliance and chimney connection

14.5.2.1 The inspection shall include examination of all areas covered in 14.4.2 for Level I inspections.

14.5.2.2 All areas of the chimney and its surroundings that can be accessed without the removal or destruction of permanently attached portions of the chimney or building structure shall be inspected, including examination of the following:

(1) Locations within attics
(2) Crawl spaces
(3) Basements that can be accessed through doors, hatches, or other openings that do not require removal of permanently attached parts of the building

14.5.2.3 The inspection shall include examination of accessible areas of all chimney flues and the internal surfaces of all flue liners incorporated within the chimney with video scanning equipment or other means used as necessary to observe those areas.

14.5.2.4 The inspection shall include verification of proper clearances from the chimney to combustibles at all locations that can be accessed as described in 14.4.2.2.

14.5.2.5 The inspection shall include evaluation of the proper type of flue lining material and flue sizing for the type and input rating of the connected appliances.

14.5.2.5.1 Sizing of flues for solid fuel–burning and pellet fuel–burning equipment shall be in accordance with this standard.

14.5.2.5.2 Sizing of flues for gas appliances shall be in accordance with NFPA 54, *National Fuel Gas Code*.

14.5.2.5.3 Sizing of flues for liquid fuel appliances shall be in accordance with NFPA 31, *Standard for the Installation of Oil-Burning Equipment*.

14.6* Level III Inspections. A Level III inspection shall be utilized for concealed areas.

14.6.1 Areas Required. A Level III inspection shall be required only for those areas suspected of malfunction or damage that cannot be properly evaluated by a Level I or Level II inspection.

14.6.2 Circumstances. A Level III inspection shall be conducted under the following circumstances:

(1) Where necessary for the investigation of a building or chimney fire, weather or seismic event, or other incident known to have caused damage to the chimney or building
(2) Where a hazard detected or suspected as the result of Level I or II inspection cannot be fully evaluated without access to concealed areas
(3) At other times as indicated in Section 14.6

14.6.3 Scope and Access. A Level III inspection shall include examination of concealed areas of the chimney suspected of damage or malfunction.

14.6.3.1 The inspection shall include examination of all areas covered in 14.4.2 for Level I inspections and in 14.5.2 for Level II inspections.

14.6.3.2 Examination of the chimney shall include concealed areas that can be accessed only by removal or destruction of permanently attached portions of the chimney or building structure, as necessary to determine compliance with this standard.

Annex A Explanatory Material

Annex A is not a part of the requirements of this NFPA document but is included for informational purposes only. This annex contains explanatory material, numbered to correspond with the applicable text paragraphs.

A.3.2.1 Approved. The National Fire Protection Association does not approve, inspect, or certify any installations, procedures, equipment, or materials; nor does it approve or evaluate testing laboratories. In determining the acceptability of installations, procedures, equipment, or materials, the authority having jurisdiction may base acceptance on compliance with NFPA or other appropriate standards. In the absence of such standards, said authority may require evidence of proper installation, procedure, or use. The authority having jurisdiction may also refer to the listings or labeling practices of an organization that is concerned with product evaluations and is thus in a position to determine compliance with appropriate standards for the current production of listed items.

A.3.2.2 Authority Having Jurisdiction (AHJ). The phrase "authority having jurisdiction," or its acronym AHJ, is used in NFPA documents in a broad manner, since jurisdictions and approval agencies vary, as do their responsibilities. Where public safety is primary, the authority having jurisdiction may be a federal, state, local, or other regional department or individual such as a fire chief; fire marshal; chief of a fire prevention bureau, labor department, or health department; building official; electrical inspector; or others having statutory authority. For insurance purposes, an insurance inspection department, rating bureau, or other insurance company representative may be the authority having jurisdiction. In many circumstances, the property owner or his or her designated agent assumes the role of the authority having jurisdiction; at government installations, the commanding officer or departmental official may be the authority having jurisdiction.

Copyright National Fire Protection Association
Provided by IHS under license with NFPA
No reproduction or networking permitted without license from IHS
Not for Resale

A.3.2.4 Listed. The means for identifying listed equipment may vary for each organization concerned with product evaluation; some organizations do not recognize equipment as listed unless it is also labeled. The authority having jurisdiction should utilize the system employed by the listing organization to identify a listed product.

A.3.3.1 Accessible (for Inspections). Access can be described as the capability of being reached for the purpose of inspection, maintenance, or repair. Access could first require the movement or removal of a panel, door, or other covering, the use of ladders, or the use of a common tool, such as a screwdriver or wrench. Access does not require any destructive actions to the building or property.

A.3.3.1.1 Readily Accessible (for Inspections). Readily accessible can be described as being quickly or easily reached for inspection, maintenance, or repair. Readily accessible would not require the use of tools for opening or removal of any panel, door, or other covering, nor would it require the use of ladders.

A.3.3.32.1.3 Type HT Factory-Built, Residential-Type and/or Building Heating Appliance Type Chimney. Chimneys designated as Type HT are listed for venting flue products not exceeding 1000°F (538°C) continuous. In addition, they comply with the 10-minute 2100°F (1149°C) temperature test requirements of UL 103, *Standard for Factory-Built Chimneys for Residential Type and Building Heating Appliance*. Such test requirements were developed to simulate the effects of a chimney fire. Type HT chimneys are required on certain controlled-combustion solid fuel–burning appliances because such appliances are often associated with a higher likelihood of creosote buildup and associated occurrence of chimney fires.

A.3.3.55 Crown. Masonry chimney termination includes considerations of weather protection for the chimney and thermal expansion of the flue liner.

A chimney crown offers the advantages of extension beyond the sides of the chimney to direct water away from both the flue and the chimney. A properly sealed space between the liner and the crown to allow vertical movement of the flue should be a design feature of prefabricated or site-constructed masonry or metal crowns.

A site-applied wash or splay may require frequent maintenance to ensure that it remains impervious to water penetration. Because a splay or a wash does not extend out past the chimney, it allows water to run down the sides of a chimney, which can result in chimney deterioration. Care must be taken to provide for vertical movement of the flue liner as required in 7.2.13.4.

See Figure A.3.3.55.

A.3.3.89 Gas Appliance Categories. For additional information on appliance categorization, see the appropriate Z21 and Z83 American National Standards.

A.3.3.147.1 Engineered Venting or Chimney System. Approved engineering methods can include the following:

(1) The vent capacity tables in NFPA 54, *National Fuel Gas Code*
(2) The fuel-burning equipment manufacturers' venting instructions
(3) Drawings, calculations, and specifications provided by the venting equipment manufacturer or a professional engineer
(4) Use of calculations from *ASHRAE Handbook: HVAC Systems and Equipment*, Chapter 31
(5) Application of the VENTII (version 4.1 or more current) computer program, developed under Gas Research Institute sponsorship for vent design and analysis

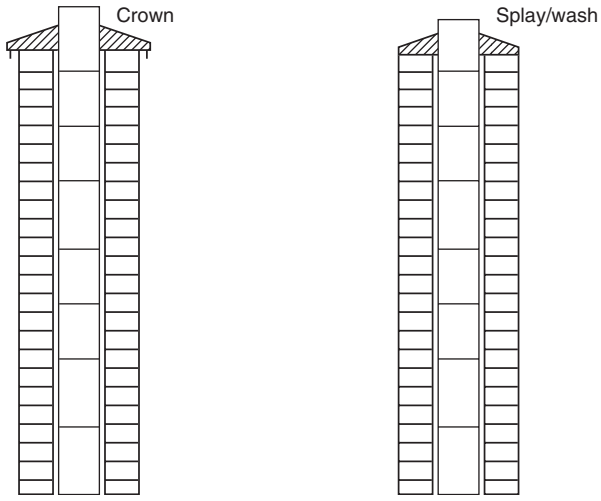

FIGURE A.3.3.55 Chimney Crown and Splay/Wash.

(6) The listed metal liner sizing and listed cast-in-place liner sizing tables in NFPA 31, *Standard for the Installation of Oil-Burning Equipment*

A.3.3.159 Vent. Type B gas vents are tested with flue gases at 400°F (204°C) above ambient. Type BW gas vents are tested with flue gases at 480°F (249°C) above ambient and are limited to use only with certain gas-fired wall furnaces. Special Gas Vents may be certified at a variety of flue gas temperature rises up to 480°F (249°C) above ambient. Pellet vents are tested with flue gases at 500°F (260°C) above ambient. Type L vents are tested with flue gases at 500°F (260°C) above ambient.

A.4.1 See 3.3.147.1.

A.4.1.2.5(3) Documents that provide listing requirements include UL 2034, *Standard for Single and Multiple Station Carbon Monoxide Alarms*, and IAS 6-96, *IAS-US Requirements for Carbon Monoxide Alarms for Residential Use*. Additionally, NFPA 720, *Standard for the Installation of Carbon Monoxide (CO) Warning Equipment in Dwelling Units*, provides guidance for the installation of carbon monoxide warning equipment.

A.6.1.3.2 See 3.3.147.1.

A.6.3 See 3.3.147.1.

A.7.1.11 See 3.3.147.1.

A.7.1.12 Many residential appliances, including pellet stoves, Category 1 gas appliances, and most residential oil-fired appliances, do not create sustained positive pressure inside masonry chimneys even though they are equipped with combustion blowers.

A.7.3.1.3 However, this does not eliminate the firestopping requirements in 7.1.6.

A.8.1.8 See 3.3.147.1.

A.9.3.1(3) See 3.3.147.1.

A.9.5.2 The system design should be based on applicable heat transfer principles, taking into account the geometry of the system, the heat loss characteristics of the structure behind the combustible material, and the possible abnormal operating conditions of heat-producing sources.

Copyright National Fire Protection Association
Provided by IHS under license with NFPA
No reproduction or networking permitted without license from IHS
Not for Resale

A.9.7.9 Listed equipment includes components such as heat reclaimers, draft regulators, and safety controls.

A.9.11 For information concerning the use and installation of draft regulators with oil-burning appliances, see NFPA 31, *Standard for the Installation of Oil-Burning Equipment.*

A.10.6 Additional requirements for the installation of venting systems serving gas appliances appear in NFPA 54, *National Fuel Gas Code.*

A.10.7.2.1 For information on ventilation of restaurant cooking equipment, see NFPA 96, *Standard for Ventilation Control and Fire Protection of Commercial Cooking Operations.*

A.11.2 See Figure A.11.2(a) and Figure A.11.2(b).

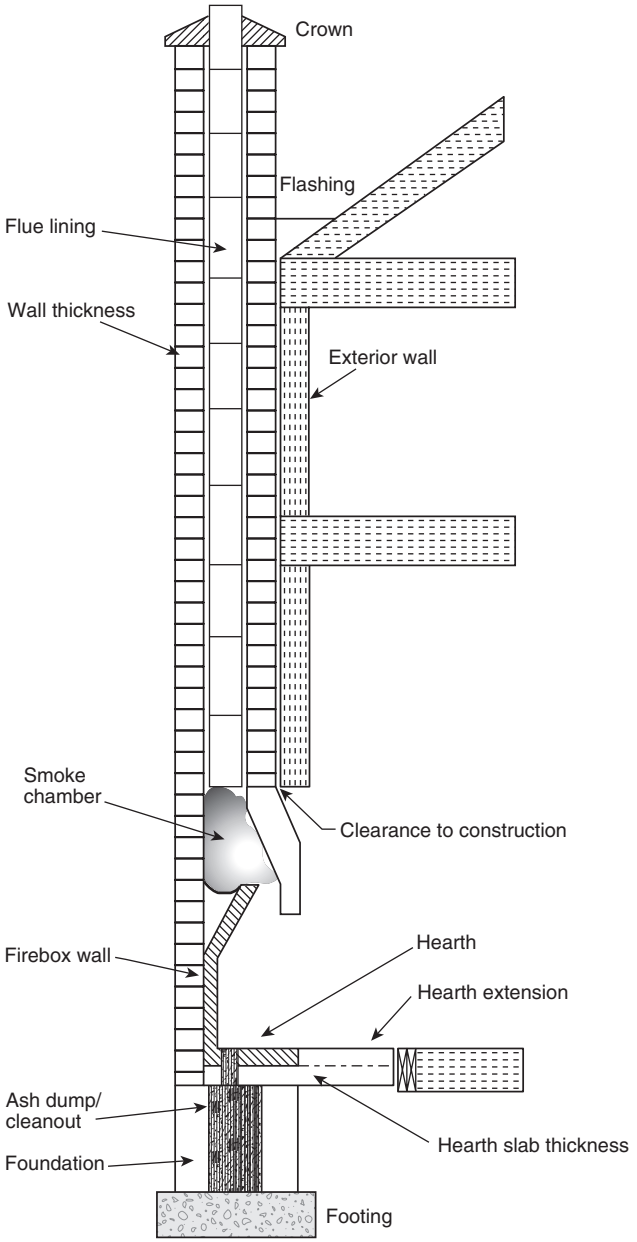

FIGURE A.11.2(a) Fireplace and Chimney Details.

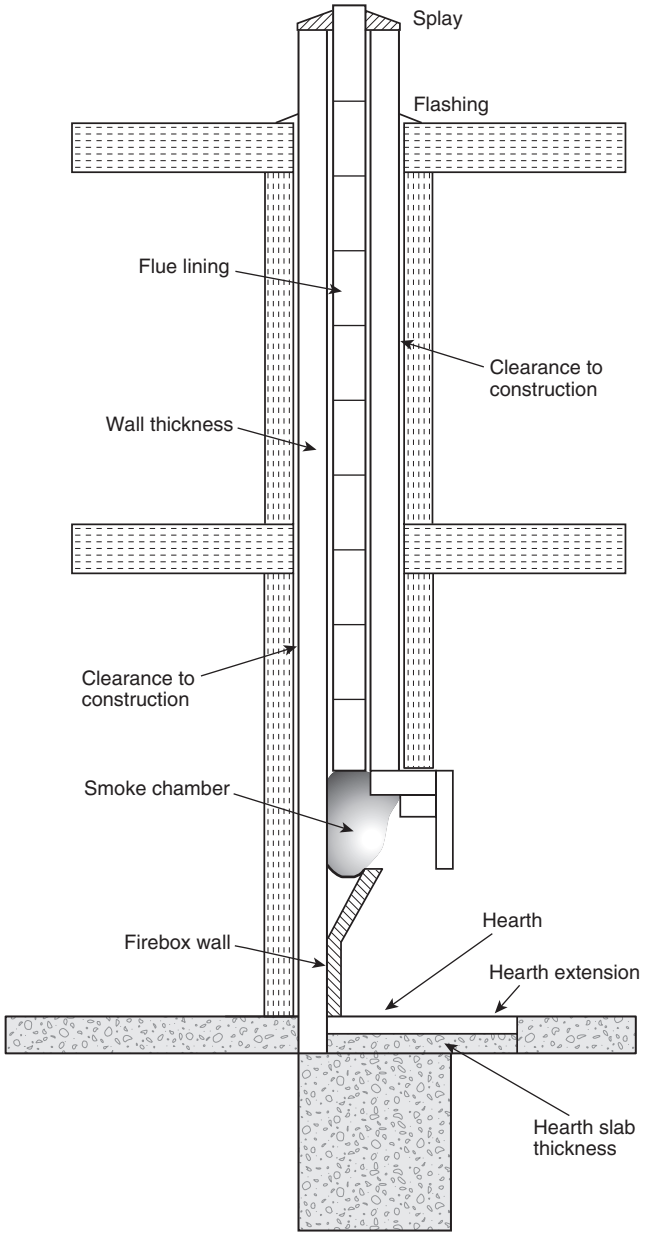

FIGURE A.11.2(b) Interior Block Chimney.

A.11.4 Factory-built accessories for fireplaces include such devices as fireplace heater inserts and heat exchangers circulating air or water that could alter the combustion or heating characteristics of the fireplace. The fireplace should be provided with a means to prevent sparks from entering the room.

A.12.2.1 Sufficient clearance should be maintained to allow cleaning of surfaces; the replacement of air filters, blowers, motors, controls, and chimney connectors; the lubrication and servicing of moving parts; and the adjustment and servicing of stokers, if provided.

A.12.4.4 Some appliances could perform incorrectly with the "three times" rule. In some cases, smaller cross-sectional areas could be needed to ensure proper performance. The appliance manufacturer's instructions should be consulted for

Copyright National Fire Protection Association
Provided by IHS under license with NFPA
No reproduction or networking permitted without license from IHS
Not for Resale

each installation. Natural draft residential-type appliances are designed with a combustion system that relies on natural draft created within the appliance or by the venting system to maintain the combustion process.

A.12.4.5.1(4) Some appliances could perform incorrectly with the "three times" rule. In some cases, smaller cross-sectional areas could be needed to ensure proper performance. The appliance manufacturer's instructions should be consulted for each installation.

A.13.9 Deterioration of the interior surface of a liner that results in softening or corrosion of liner materials (e.g., powdering or crumbling of liner materials or attack on metal surfaces resulting in perforation) indicates an inability of the liner to continue to perform its intended function.

Damage to liners that is from either structural or thermal causes and results in cracks that would allow moisture to penetrate the liner or would preclude the liner from containing flames or the products of combustion, or both, indicates an inability of the liner to continue to perform its intended function.

A.14.2 This chapter covers the inspection of chimneys and is intended primarily for the inspection of residential chimneys, but at the discretion of the inspector, it could apply to industrial or commercial chimneys serving certain appliances.

There are different types of inspections, ranging from superficial observation to an in-depth inspection in which portions of the chimney or building structure are removed, or other destructive methods are used to check hidden portions of a system. Inspections can be triggered by many circumstances, ranging from routine maintenance activities to a complete re-evaluation following a destructive event such as an earthquake. This chapter is intended to delineate, as precisely as possible, the inspection activities appropriate for different circumstances. The application of these requirements to specific situations requires judgment on the part of the inspector and should be in accordance with the Indications section of Table 14.3.1.

Although this chapter is concerned with the inspection of chimneys, the chimney cannot be considered apart from the appliance connected to it. Any defects or potential hazards encountered during such work should not be ignored and should be brought to the attention of the owner, occupant, or responsible party.

A.14.2.1 Certain minor tasks, such as installation of a chimney cap or flashing repair, are so limited in scope that they do not trigger a full inspection of the chimney. However, any defects or potential hazards encountered during such work should not be ignored and should be brought to the attention of the responsible party.

A.14.4 A Level I Inspection is required to ensure the minimum acceptable levels of safety for a chimney. Unless otherwise stated, a Level I inspection is limited to readily accessible areas. The following list indicates some of the items to be included in a Level I inspection, to the extent that they are readily accessible and included in the installation being inspected. It should not be considered all-inclusive.

(1) Level of cleanliness of venting system
(2) Verification that the flue is not blocked or significantly restricted or obstructed
(3) Appliance clearance
(4) General condition of appliance
(5) Chimney or vent and its connector for general suitability for appliance
(6) Chimney or vent and its connector for type, material, and condition
(7) Chimney or vent and its connector clearance
(8) Chimney or vent and its connector joint security
(9) Chimney or vent and its connector for support and stability
(10) Chimney or vent and its connector for offset, rise, or slope
(11) Chimney connector or vent connector accessories (barometric damper, damper, draft hood, heat reclaimer)
(12) Chimney liner for proper support
(13) Appropriateness of the chimney liner type for appliance
(14) That the chimney liner is present and free of readily visible defects, distortion, and spalling
(15) That flue cleanouts are present and properly installed
(16) Condition of wash when readily accessible
(17) That the chimney cap, if present, does not contribute to flue blockage/restriction
(18) That the spark arrester, if present, is not obstructed
(19) That the top mount damper, if present, does not obstruct the flue
(20) Wall pass-through general condition
(21) That the connector is secure where it meets wall pass-through, chimney, or vent
(22) General condition of hearth and hearth extension
(23) Hearth extension sizing
(24) General condition of the hearth extension, fireplace facing, fire chamber, and smoke chamber, with special emphasis on tight-fitting joints between assemblies
(25) Type and condition of fire chamber lining
(26) Clearance to combustible trim and mantels around fireplace opening
(27) Operation and closure of damper assembly
(28) Smoke chamber general condition
(29) Smoke chamber accessibility
(30) Smoke chamber transition to flue
(31) That air circulation grilles (openings) around factory-built fireplace are not blocked or restricted
(32) Freedom from rust or corrosion of readily accessible metal parts in factory-built fireplaces and chimneys
(33) That mechanical draft systems are operable and free from rust and corrosion

A.14.4.2.7.3 This paragraph is provided for cases where removing the device is not necessary to gain access to flue passageways needing inspection. It covers devices such as grates or heat exchangers that do not fill or block the fireplace opening. It also covers fireplace inserts or stoves that are directly connected to the chimney flue, where combustion products are contained in the connection and do not contact the fireplace surfaces.

A.14.5 A Level II inspection is limited to accessible parts of the chimney to include attic, basement, and crawl spaces. The following list (which is in addition to the list in A.14.4 for Level I inspection and which should not be considered all-inclusive) indicates some of the items to be included in a Level II inspection, to the extent that they are readily accessible and included in the installation being inspected:

(1) Chimney wall material
(2) Condition of chimney walls
(3) Attic insulation shield for factory-built chimneys and factory-built fireplace chimneys
(4) Housing and shrouds for factory-built chimneys and factory-built fireplace chimneys
(5) Factory-built chimney support type

Copyright National Fire Protection Association
Provided by IHS under license with NFPA
No reproduction or networking permitted without license from IHS
Not for Resale

(6) Factory-built chimney and factory-built fireplace chimney assembled with appropriate parts
(7) Factory-built chimney and factory-built fireplace chimney clearances
(8) Factory-built chimney and factory-built fireplace chimney attachment to appliance
(9) That the venting system is properly sized for the appliance
(10) Height and dimensions of liner
(11) Installation and condition of offsets in flue
(12) That unused openings (into flue) are properly sealed
(13) Construction of wash
(14) Expansion joint between flue and wash
(15) Condition of flashing
(16) Condition of crickets, when present
(17) Chimney connector or vent connector gauge (material thickness)
(18) That the chimney and vent connector diameter is proper for appliance(s) connected
(19) That the wall pass-through is properly installed with adequate clearance and installation details
(20) Chimney or vent connector configuration (appropriate dimensions for sizing and compared with vent or chimney)
(21) Manifold sizing
(22) Combustion air supplied for fireplaces in accordance with Section 11.5
(23) Condition of outside air inlets, outlets, and ducting in accordance with Section 11.5
(24) Ash dump
(25) Combustible framing/forms under hearth or hearth extension of masonry fireplaces
(26) Fireplace opening size (ratio with flue) of masonry fireplaces
(27) Size of throat of masonry fireplaces
(28) Smoke chamber dimensions (angle/height) of masonry fireplaces
(29) Smoke chamber lining (parged, firebrick, etc.) of masonry fireplaces
(30) Smoke shelf area of masonry fireplaces
(31) Factory-built fireplace brand, model, and listing
(32) That factory-built fireplace glass doors and accessories (inserted items) are approved
(33) Factory-built fireplace hearth platform and covering

When conducting a Level II inspection on any type of factory-built chimney or appliance, the inspector should request the product installation instructions from the building owner or occupant for review prior to completing the inspection.

A.14.5.1(1) This item shall not be interpreted to include the removal or disconnection of an appliance and subsequent replacement or reconnection that occurs during the course of routine cleaning and maintenance activities.

A.14.6 A Level III inspection encompasses a complete evaluation of the chimney, including verification of proper materials and clearances to combustibles.

The following list (which is in addition to the lists in A.14.4 and A.14.5 for Level I and Level II inspections and which should not be considered all-inclusive) indicates some of the items to be included in a Level III inspection, to the extent that they are readily accessible and included in the installation being inspected:

(1) Firestopping
(2) Debris in annular space of factory-built chimney and factory-built fireplace chimney
(3) Clearances inside the chase housing of factory-built chimneys and factory-built fireplace chimneys
(4) Masonry foundation
(5) Masonry foundation depth and dimension
(6) Masonry foundation soil conditions
(7) That the space around the chimney liner is adequate
(8) That seismic requirements, where required, have been met
(9) Thickness of fireplace walls
(10) Clearance around fireplace walls
(11) Smoke chamber wall thickness
(12) Smoke chamber clearance
(13) Factory-built fireplace clearance
(14) That the factory-built fireplace hearth strip is properly installed
(15) That the factory-built fireplace mounting is stable
(16) Connection between factory-built fireplace and its chimney
(17) Factory-built fireplace hearth extensions per manufacturer's instructions, including U values

Annex B Informational References

B.1 Referenced Publications. The documents or portions thereof listed in this annex are referenced within the informational sections of this standard and are not part of the requirements of this document unless also listed in Chapter 2 for other reasons.

B.1.1 NFPA Publications. National Fire Protection Association, 1 Batterymarch Park, Quincy, MA 02169-7471.

NFPA 31, *Standard for the Installation of Oil-Burning Equipment*, 2001 edition.

NFPA 54, *National Fuel Gas Code*, 2006 edition.

NFPA 96, *Standard for Ventilation Control and Fire Protection of Commercial Cooking Operations*, 2004 edition.

NFPA 720, *Standard for the Installation of Carbon Monoxide (CO) Warning Equipment in Dwelling Units*, 2005 edition.

B.1.2 Other Publications.

B.1.2.1 ASHRAE Publication. American Society of Heating, Refrigerating and Air Conditioning Engineers, Inc., 1791 Tullie Circle, N.E., Atlanta, GA 30329-2305.

ASHRAE Handbook: HVAC Systems and Equipment, 2004.

B.1.2.2 CSA America Publication. Canadian Standards Association, 8501 East Pleasant Valley Road, Cleveland, OH 44131-5575.

IAS 6-96, *IAS-US Requirements for Carbon Monoxide Alarms for Residential Use*, 1998.

B.1.2.3 UL Publications. Underwriters Laboratories Inc., 333 Pfingsten Road, Northbrook, IL 60062-2096.

UL 103, *Standard for Factory-Built Chimneys for Residential Type and Building Heating Appliance*, 2001, with revisions through December 2003.

UL 2034, *Standard for Single and Multiple Station Carbon Monoxide Alarms*, 1996, with revisions through June 2002.

B.2 Informational References. The following documents or portions thereof are listed here as informational resources only. They are not a part of the requirements of this document.

B.2.1 NFPA Publication. National Fire Protection Association, 1 Batterymarch Park, Quincy, MA 02169-7471.

NFPA 220, *Standard on Types of Building Construction*, 2006 edition.

B.3 References for Extracts in Informational Sections. (Reserved)

--`,,```,,,,````-`-`,,`,,`,`,,`---
Copyright National Fire Protection Association
Provided by IHS under license with NFPA
No reproduction or networking permitted without license from IHS
Not for Resale

Index

© 2006 National Fire Protection Association. All Rights Reserved.

The copyright in this index is separate and distinct from the copyright in the document that it indexes. The licensing provisions set forth for the document are not applicable to this index. This index may not be reproduced in whole or in part by any means without the express written permission of NFPA.

-A-

Accessible (for inspections) ..... Table 14.3.1, 14.4.2, 14.5.2, 14.6.3
- Definition 3.3.1, A.3.3.1
- Readily accessible, (for inspections) ..... Table 14.3.1, 14.4.2.2
  - Definition 3.3.1.1, A.3.3.1.1

Air
- Combustion air
  - Barometric draft regulators 9.11.3
  - Definition 3.3.2.1
  - Ducts 11.5
  - Inspections A.14.5
  - Masonry fireplaces 11.5.1.2
  - Solid fuel–burning appliances 12.3
- Dilution air (definition) 3.3.2.2

Appliance casing (or jacket) (definition) 3.3.4
Appliance flues .....*see* Flues
Appliances .....*see also* Gas appliances; Heating appliances
- Definition 3.3.3
- Direct vent appliances (sealed combustion system appliances)
  - Definition 3.3.3.2
  - Uses/installation 10.7.1
- Equipment with integral vents 10.7.4
- Factory-built (definition) 3.3.3.3
- Floor-mounted restaurant-type cooking ....*see also* Restaurant-type ranges
  - Definition 3.3.3.4
  - Ventilating hoods and exhaust systems 10.7.2.1, A.10.7.2.1
- Fuel-burning .....*see also* Pellet fuel–burning appliances; Solid fuel–burning appliances
  - Automatically lighted fuel-burning appliances (definition) 3.3.3.5.1
- Heat-producing appliances (definition) 3.3.3.7
- Inspections ..... Chap. 14
- Installation
  - In attics 9.2.2.1
  - Not in attics 9.2.2.2
- Special venting arrangements 10.7, A.10.7.2.1
- Vented (definition) 3.3.3.12
- Ventilating hoods and exhaust systems 10.7.2, A.10.7.2.1

Approved (definition) 3.2.1, A.3.2.1
Ash
- Definition 3.3.7
- Dumps 11.2.8, A.14.5

Ash receptacle door (definition) 3.3.8
Attic-type, forced-air, central warm-air furnace (definition) 3.3.88.1
Attic-type heating appliances 9.2.2.1, 9.6
- Definition 3.3.3.6.1

Authority having jurisdiction (definition) 3.2.2, A.3.2.2
Automatically lighted fuel-burning appliances (definition) 3.3.3.5.1
Automatically operated dampers .....*see* Dampers
Automatic electric igniter (definition) 3.3.12

-B-

Baffles 9.9.2
- Definition 3.3.13

Barometric draft regulators 9.11.3, A.14.4
- Definition 3.3.14

Base of flue
- Definition 3.3.37
- Masonry chimneys 7.1.5

Boilers
- Chimney and vent connector clearances ..... Table 9.5.1.1
- Chimney selection ..... Table 5.2.2.1
- Definition 3.3.15
- Mounting 12.5.1.3
- Vents
  - Installation 10.6.4.1
  - Selection ..... Table 5.2.3.2

Bond (definition) 3.3.16
Breeching
- Chimney and vent connectors 9.2.6
- Definition 3.3.17
- Unlisted metal chimneys 8.1.3.2

Broilers, open-top 10.7.2.4
Btu (definition) 3.3.18
Building heating appliances .....*see* Nonresidential, low-heat appliances
Built-in ovens, vent selection ..... Table 5.2.3.2
Built-in residential-type ranges (definition) 3.3.124.2.1
Bungalow utility-type ranges (definition) 3.3.124.1

-C-

Caps
- Chimney 4.6, A.1.4.4
  - Definition 3.3.22.1
- Vent 4.6, 10.4.1.2
  - Definition 3.3.22.2

Ceiling spaces, venting systems above 4.4.2
Central warm-air furnaces .....*see also* Gravity-type, central warm-air furnaces
- Definition 3.3.88.6
- Forced-air (definition) ..... 3.3.88.1 to 3.3.88.5
- Vent selection ..... Table 5.2.3.2

Chimney caps 4.6, A.14.4
- Definition 3.3.22.1

Chimney connectors ..... Chap. 9; *see also* Flue lining
- Clearances ..... 9.5, Fig. 9.5.1.1, Table 9.5.1.1, Table 9.5.1.2, Fig. 9.7.5, 12.4.2, A.9.5.2
- Dampers 9.9
- Definition 3.3.52.1
- Draft hoods 9.10
- Draft regulators 9.11, A.9.11
- Inspections 13.3, 13.4, 14.4.2.5, 14.4.2.6, A.14.4, A.14.5
- Installation 9.7, A.9.7.9
- Interconnection 9.8
- Length ..... 9.3, A.9.3.1(3)
- Location 9.6
- Materials ..... 9.2, Table 9.2.2.3
- Required 9.1
- Size 9.4
- Solid fuel–burning appliances ..... 12.4, A.12.4.4, A.12.4.5.1(4)
- Thimbles 7.1.9.1

Chimney connector-type heat reclaimers 9.7.9, A.9.7.9
- Definition 3.3.35

Chimney flue base (base of flue)
- Definition 3.3.37
- Masonry chimneys 7.1.5

Chimney flues .....*see* Flues
Chimney lining .....*see* Flue lining

--`,,```,,,,````-`-`,,`,,`,`,,`---

Copyright National Fire Protection Association
Provided by IHS under license with NFPA
No reproduction or networking permitted without license from IHS

Not for Resale

Chimneys .....*see also* Draft; Factory-built chimneys; Masonry chimneys; Unlisted metal chimneys (smokestacks)
Cleaning methods 13.6
Definitions 3.3.32
Evidence of damage 13.7
Inspections
Annual 13.2
Evidence of damage 13.7
Existing chimneys ..... 13.4.1, 13.8, Chap. 14
Initial installation 13.1
Operating malfunctions 13.8
Selection 5.2
Types 5.1
Chute-fed incinerators (Class IIA)
Definition 3.3.102.1
Masonry chimneys 7.4.2
Circulating air ducts and plenums 4.4.1, 11.2.4.3
Circulating room heaters (definition) 3.3.98.1.1
Cleanout openings
Definition 3.3.40
Inspection and maintenance 13.3, 13.5, 14.4.2.2, A.14.4
Masonry chimneys 7.1.4
Masonry fireplaces 11.2.7, 11.2.8
Clearances .....*see also* Protection systems, clearance
Chimney and vent connectors ..... 9.5, Fig. 9.5.1.1, Table 9.5.1.1, Table 9.5.1.2, Fig. 9.7.5, 12.4.2, A.9.5.2
Chimneys and enclosures 4.3.2
Definition 3.3.41
Inspections ..... Table 14.3.1, 14.5.2.4, A.14.4 to A.14.6
Masonry chimneys ..... Table 7.2, 7.3, A.7.3.1.3
Masonry fireplaces 11.2.5
Single-wall metal pipe 10.6.4.1, 10.6.4.3
Unlisted metal chimneys (smokestacks) 8.1.5, 8.2.2, 8.3.3
Clothes dryers
Definition 3.3.42
Type 1 ..... 10.7.3.6, 10.7.3.10
Definition 3.3.42.1
Type 2 ..... 10.7.3.6, 10.7.3.8, 10.7.3.10
Definition 3.3.42.2
Venting 10.7.3
Combination appliances
Room heater/fireplace stoves
Definition 3.3.78.1
Mounting 12.5.1.2
Venting of 10.1.2
Combination-fuel boilers (definition) 3.3.15.1
Combination-fuel furnaces
Chimney selection ..... Table 5.2.2.1
Definition 3.3.88.10
Combustible material
Clearance from
Chimney connectors and vent connectors 9.5.4, 9.5.5, 9.7.3, 9.7.4, 9.7.5, 12.4.2
Inspections ..... Table 14.3.1, 14.5.2.4
Masonry chimneys 7.3, A.7.3.1.3
Single-wall metal pipe 10.6.4.1, 10.6.4.3
Unlisted metal chimneys 8.1.5.1, 8.2.2.1.1, 8.3.3.1.1
Definition 3.3.110.1
Combustion (definition) 3.3.47
Combustion air .....*see* Air
Combustion products 4.1.2.2, A.14.4.2.7.3
Definition 3.3.49
Leakage of 4.1.4
Commercial-industrial-type incinerators .....*see* Incinerators
Confined space (definition) 3.3.51
Connectors .....*see* Chimney connectors; Vent connectors
Cooking appliances, floor-mounted restaurant-type .....*see also* Restaurant-type ranges
Definition 3.3.3.4
Ventilating hoods and exhaust systems 10.7.2.1, A.10.7.2.1
Corbels
Definition 3.3.53
Hearth extensions 11.3.1.1
Masonry chimneys ..... 7.1.2, Figs. 7.1.2(a) to (d), 11.2.1.7
Counter (gas) appliances (definition) 3.3.3.1
Crowns (definition) 3.3.55, A.3.3.55

-D-

Dampers
Automatically operated
Definition 3.3.56.1
Installation ..... 9.9.4(2)
Definition 3.3.56
Flue gas 9.9
Definition 3.3.56.2
Inspections A.14.4
Manually operated
Definition 3.3.56.3
Installation 9.9.1, 9.9.3
Masonry fireplaces 11.2.9
Decorative shrouds 6.1.5, 10.4.6, 11.1.4
Definition 3.3.57
Definitions ..... Chap. 3
Detection and warning devices ..... 4.1.2.5(3), A.4.1.2.5(3)
Dilution air (definition) 3.3.2.2
Dilution flue (definition) 3.3.82.3
Dimensions 1.5
Direct vent appliances (sealed combustion system appliances)
Definition 3.3.3.2
Uses/installation 10.7.1
Downflow-type, forced-air, central warm-air furnace (definition) 3.3.88.2
Draft 4.1, A.4.1
Definitions 3.3.61
Mechanical (definition) ..... 3.3.61.1; *see also* Mechanical draft venting systems (flue gases)
Natural (definition) ..... 3.3.61.2; *see also* Natural draft venting systems (flue gases)
Draft hoods ..... Table 9.5.1.1, 9.6, 9.7.3, 9.9.2
Definition 3.3.62
Uses/installation 9.10
Vents ..... Table 5.2.3.2, 10.1.1, 10.6.4.1, 10.6.4.2.2
Draft regulators 9.11, A.9.11, A.14.4
Barometric 9.11.3
Definition 3.3.14
Duct furnaces
Definition 3.3.88.11
Vent selection ..... Table 5.2.3.2
Ducts
Circulating air 4.4.1, 11.2.4.3
Combustion air 11.5
Inspections A.14.5
Unlisted metal chimneys, use of 8.1.4
Venting systems in 4.4

-E-

Enclosures 4.3, 6.1.4, 8.2.2.2.1, 8.3.3.2.1, 10.6.3
Engineered venting or chimney systems
Clearances 9.5.1.2, 9.5.2, A.9.5.2
Definition 3.3.147.1, A.3.3.147.1
Manually fired appliances, use with ..... 4.1.2.5(3), A.4.1.2.5(3)
Selection ..... Table 5.2.2.1
Wood-burning appliances, use with 6.1.3.4
Equivalency to standard 1.4
Exhaust systems 10.7.2, A.10.7.2.1

Copyright National Fire Protection Association
Provided by IHS under license with NFPA
No reproduction or networking permitted without license from IHS
Not for Resale

-F-

Factory-built appliances (definition) 3.3.3.3
Factory-built chimneys ..... Chap. 6, 11.2.1.14
Building heating appliance type 6.1.3.1, 6.1.3.2, 6.1.3.5, A.6.1.3.2
Definition 3.3.32.1.1
Enclosures 6.1.4
Inspections ..... Chap. 14
Installation ..... Fig. 5.1.1(a), 6.1, A.6.1.3.2
Masonry chimneys, installation within ..... 7.2.4(3)
Medium-heat appliance type 6.1.3.1
Definition 3.3.32.3
Positive pressure capable (definition) 3.3.32.4
Residential type and building heating appliance type 6.1.3.1, 6.1.3.2, 6.1.3.5, A.6.1.3.2
Definition 3.3.32.1.2
Residential type and/or building heating appliance type—Type HT 6.1.3.2, 6.1.3.5, A.6.1.3.2
Definition 3.3.32.1.3, A.3.3.32.1.3
Sizing 6.3, A.6.3
Types 6.1, A.6.1.3.2
Uses 6.2
Vent connectors 9.2.2.3, 9.2.3
Factory-built fireplaces ..... *see* Fireplaces
Fans (definition) 3.3.72
Fan-type floor furnaces (definition) 3.3.88.12.1
Fan-type wall furnaces (definition) 3.3.88.14.1
Fireplace accessories 11.4, 14.4.2.7, A.11.4
Definition 3.3.76
Fireplace inserts 1.4, A.11.4
Chimney selection ..... Table 5.2.2.1
Definition 3.3.77
Inspections 14.4.2.7, A.14.4.2.7.3
Fireplaces
Chimney selection ..... Table 5.2.2.1, 6.1.3.3
Definition 3.3.75
Design/installation ..... Chap. 11
Factory-built
Combustion air ducts 11.5.1.1
Definition 3.3.75.1
Gas or oil appliances, connectors for 9.7.12
Uses/installation 11.1
Inspection and maintenance ..... 13.1, 13.2, 13.7, 13.8, Chap. 14
Masonry 11.2, A.11.2
Accessibility 11.2.6
Chimney selection ..... Table 5.2.2.1, 6.1.3.5
Clearances 11.2.5
Combustion air ducts 11.5
Construction 11.2.1
Definition 3.3.75.2
Gas or oil appliances, connectors for 9.7.13
Hearth extensions 11.3
Solid fuel–burning appliances, connection to ..... 12.4.5, A.12.4.5.1(4)
Steel fireplace units installed with masonry 11.2.4.1
Vent selection ..... Table 5.2.3.2
Fireplace stoves
Chimney selection ..... Table 5.2.2.1
Combination room heater/fireplace stove
Definition 3.3.78.1
Mounting 12.5.1.2
Definition 3.3.78
Inspections 14.4.2.7, A.14.4.2.7.3
Mounting 12.5.1.2
Fireplace units, steel
Definition 3.3.156.2
Uses/installation 11.2.4
Firestopping
Inspections A.14.6
Masonry chimneys 7.1.6, A.7.3.1.3
Masonry fireplaces 11.2.5.2
Floor furnaces
Definitions 3.3.88.12
Fan-type (definition) 3.3.88.12.1
Gravity-type (definition) 3.3.88.12.2
Vent selection ..... Table 5.2.3.2
Floor-mounted restaurant-type cooking appliances ..... *see also* Restaurant-type ranges
Definition 3.3.3.4
Ventilating hoods and exhaust systems 10.7.2.1, A.10.7.2.1
Floor protectors (definition) 3.3.80
Flue collars (definition) 3.3.83
Flue-fed incinerator (Class II) (definition) 3.3.102.3
Flue gas dampers 9.9
Definition 3.3.56.2
Flue gases ..... *see also* Venting systems (flue gases)
Connectors, effect on flue gas flow of 9.7.8, 9.7.9, A.9.7.9
Definition 3.3.91.1
Direction of outlet and 8.2.1.3
Leakage of 8.1.3.2
Maximum temperature, factory-built chimneys 6.1.2, 6.2
Removal 4.1.1
Flue lining 4.5
Chimney and vent connectors 9.2.4.2, 9.2.5.2
Damaged or deteriorated 13.9, A.13.9
Inspections ..... 14.4.2.2, 14.5.1(2), 14.5.2.3, 14.5.2.5, A.14.4 to A.14.6
Masonry chimneys ..... 7.1.2.7, 7.1.10, 7.1.12, 7.2.2, 7.2.3(1), 7.2.4(1), 7.2.5, 7.2.7(1), 7.2.9.1, 7.2.10 to 7.2.13, 7.2.14.5, 7.3.2, A.7.1.12
Multiple flues 7.2.14.5
Positive-pressure applications 7.1.12, A.7.1.12
Unlisted metal chimneys 8.1.7
Flues ..... *see also* Flue lining
Appliance (definition) 3.3.82.1
Chimney ..... 7.1.2.7; *see also* Flue lining
Definition 3.3.82.2
Inspections ..... Chap. 14
Multiple flues 7.2.14
Size and shape 7.1.3
Dilution (definition) 3.3.82.3
Inspections ..... Chap. 14
Forced-air, central warm-air furnaces (definition) ..... 3.3.88.1 to 3.3.88.5
1400°F type factory-built chimneys
Definition 3.3.32.2
Selection ..... Table 5.2.2.1
1400°F nonresidential appliances
Chimney selection ..... Table 5.2.2.1
Definition 3.3.3.8
Fuel
Pellet (definition) ..... 3.3.87.1; *see also* Pellet fuel–burning appliances
Solid (definition) ..... 3.3.87.2; *see also* Solid fuel–burning appliances
Fuel-burning appliances ..... *see also* Pellet fuel–burning appliances; Solid fuel–burning appliances
Automatically lighted fuel-burning appliances (definition) 3.3.3.5.1
Furnaces
Chimney and vent connector clearances ..... Table 9.5.1.1
Chimney selection ..... Table 5.2.2.1
Combination-fuel
Chimney selection ..... Table 5.2.2.1
Definition 3.3.88.10
Definitions ..... 3.3.88.1 to 3.3.88.14
Mounting 12.5.1.3
Vents
Installation 10.6.4.1
Selection ..... Table 5.2.3.2
Wall furnaces 10.1.2

--`,,```,,,,````-`-`,,`,,`,`,,`---

Copyright National Fire Protection Association
Provided by IHS under license with NFPA
No reproduction or networking permitted without license from IHS
Not for Resale

-G-

Gas appliance categories (definition) 3.3.89, A.3.3.89
Gas appliances
Category I
Chimney and vent connectors 9.6, 9.7.3
Definition ..... 3.3.89(1)
Masonry chimneys 7.2.5, A.7.1.1.2
Thimbles 10.6.4.2
Type B gas vents, use of 10.1.1, 10.1.2, 10.6.4.1
Category II
Definition ..... 3.3.89(2)
Masonry chimneys 7.2.6
Uses 10.1.2, 10.1.6
Vent selection ..... Table 5.2.3.2
Category III
Definition ..... 3.3.89(3)
Masonry chimneys 7.2.6
Uses 10.1.2, 10.1.6
Vent selection ..... Table 5.2.3.2
Category IV
Definition ..... 3.3.89(4)
Masonry chimneys 7.2.6
Uses 10.1.2, 10.1.6
Vent selection ..... Table 5.2.3.2
Chimney and vent connectors 9.2.2.3, 9.6, 9.7.3, 9.7.12, 9.7.13, 9.8.3
Clearances ..... Table 9.5.1.1
Dampers 9.9.1, 9.9.5
Chimney selection ..... Table 5.2.2.1
Counter appliance (gas) (definition) 3.3.3.1
Draft regulators 9.11.1
Ventilating hoods and exhaust systems 10.7.2.1, A.10.7.2.1
Vent selection ..... Table 5.2.3.2
Vent terminations 10.4.2
Gases
Flue .....*see* Flue gases
Vent
Definition 3.3.91.2
Removal 4.1.1
Gas vents .....*see also* Type B gas vents; Type BW gas vents; Type L gas vents; Vents
Connectors ..... Table 9.5.1.1, 9.6
Definition 3.3.159.1
Size 10.2.2
Space surrounding 4.5.3
Special 3.3.159.1.1, 10.1.4
Definition 3.3.159.1.1
Masonry chimney liners, use as 7.2.6, 7.2.9.1
Notice of usage 10.5.2
Selection ..... Table 5.2.3.2
Space surrounding 4.5.3
Types and uses 10.1
Gravity-type, central warm-air furnaces
With booster fans (definition) 3.3.88.8
Definition 3.3.88.7
With integral fan (definition) 3.3.88.9
Gravity-type floor furnaces (definition) 3.3.88.12.2
Gravity-type wall furnaces (definition) 3.3.88.14.2

-H-

Headers (definition) 3.3.94
Hearth extensions
Definition 3.3.96
Factory-built fireplaces 11.1.2
Inspections ..... A.14.4 to A.14.6
Masonry fireplaces 11.2.1.5, 11.3
Hearths
Definition 3.3.95
Inspections ..... A.14.4 to A.14.6
Thickness 11.2.1.15
Heaters .....*see also* Room heaters; Unit heaters; Water heaters
Solid fuel room heaters (definition) 3.3.98.1.3
Heat exchangers 11.4, A.11.4, A.14.4.2.7.3
Definition 3.3.97
Heating appliances .....*see also* Attic-type heating appliances; Nonresidential, high-heat appliances; Nonresidential, low-heat appliances; Nonresidential, medium-heat appliances; Residential-type heating appliances
Nonresidential appliance, 1400°F
Chimney selection ..... Table 5.2.2.1
Definition 3.3.3.8
Heat-producing appliances (definition) 3.3.3.7
Heat reclaimers, chimney connector-type 9.7.9, A.9.7.9
Definition 3.3.35
High-heat nonresidential appliances ....*see* Nonresidential, high-heat appliances
High-pressure boilers (definition) ..... 3.3.15.2; *see also* Boilers
Horizontal-type, forced-air, central warm-air furnaces
Definition 3.3.88.3
Hot water supply boilers (definition) ..... 3.3.15.3; *see also* Boilers; Water heaters

-I-

Incinerators
Chimney and vent connectors ..... 9.2.4, Table 9.5.1.1
Chute-fed (Class IIA)
Definition 3.3.102.1
Masonry chimneys 7.4.2
Commercial-industrial-type (Classes III, IV, V, VI, and VII)
Chimney and vent connectors 9.2.4
Definition 3.3.102.2
Masonry chimneys 7.2.14.4, 7.4.3
Definition 3.3.102
Flue-fed (Class II) (definition) 3.3.102.3
Masonry chimneys 7.2.14.4, 7.4
Residential-type
Chimney selection ..... Table 5.2.2.1
Definition 3.3.102.4
Vents ..... Table 5.2.3.2, 10.1.2
Inspections
Annual 13.2, 13.3
Evidence of damage 13.7
Existing chimneys ..... 13.4.1, Chap. 14
Initial installation 13.1

-J-

Jackets (appliance casing) (definition) 3.3.4

-L-

Labeled (definition) 3.2.3
Lintels, masonry fireplace 11.2.1.5, 11.2.1.8
Definition 3.3.109
Listed (definition) 3.2.4, A.3.2.4
Low-heat nonresidential appliances .....*see* Nonresidential, low-heat appliances
Low-pressure boilers (definition) ..... 3.3.15.4; *see also* Boilers

-M-

Maintenance ..... Chap. 13
Mantels 11.2.5.3
Definition 3.3.104
Manually fired appliances ..... 4.1.2.5, A.4.1.2.5(3)
Manually operated dampers .....*see* Dampers
Manufacturer (definition) 3.3.106
Masonry chimney or vent connectors ..... 9.2.6, Table 9.5.1.1
Masonry chimneys ..... Chap. 7, 9.7.1, 11.2.1.14
Cleanout openings 7.1.4
Clearances ..... Table 7.2, 7.3, A.7.3.1.3
Construction ..... 7.2, Table 7.2

Copyright National Fire Protection Association
Provided by IHS under license with NFPA
No reproduction or networking permitted without license from IHS
Not for Resale

Corbeling ..... 7.1.2, Figs. 7.1.2(a) to (d), 11.2.1.7
Definition 3.3.32.5
Firestopping 7.1.6
Flue base (base of flue) 7.1.5
Flues 7.1.2.7, 7.1.3
Incinerators 7.4
Inspections ..... Chap. 14
Installation ..... Fig. 5.1.1(b)
Linings ..... 7.2.2, 7.2.3(1)
Multiple flues 7.2.14
Notice of usage 7.2.9
Positive pressure applications 7.1.12, A.7.1.12
Relining ..... 7.1.10, 14.5.1(2)
Selection ..... Table 5.2.2.1
Sizing 7.1.11, A.7.1.11
Smoke test 7.1.7
Structural design 7.1.8
Support 7.1.1
Termination ..... 4.2.1, Table 7.2, 7.4.3.3
Thimbles 7.1.9
Masonry fireplace lintels 11.2.1.5, 11.2.1.8
Definition 3.3.109
Masonry fireplaces ..... *see* Fireplaces
Masonry units, solid 11.2.1.1
Definition 3.3.156.1
Material ..... *see* Combustible material; Noncombustible material
Mechanical draft (definition) 3.3.61.1
Mechanical draft venting systems (flue gases)
Automatically operated appliances 10.7.2.3
Gastight or leak prevention 4.1.4
Inspections A.14.4
Interconnection to mechanical draft systems 9.8.1
Manually fired appliances, use with ..... 4.1.2.5, A.4.1.2.5(3)
Natural draft vent connectors and 4.1.5
Other equipment, effect on 4.1.2.2
Size ..... 4.1.2.5(3)(c)
Termination 10.4.5
Uses/installation ..... 4.1.2, A.4.1.2.5(3)
Medium-heat nonresidential appliances ..... *see* Nonresidential, medium-heat appliances

-N-

Natural draft (definition) 3.3.61.2
Natural draft venting systems (flue gases)
Automatically operated appliances 10.7.2.2
Interconnection to mechanical draft systems 9.8.1
Sizing 4.1.3
Termination 4.2.2, 10.4.2, 10.4.3
Vent connectors 4.1.5
Non-accessible, concealed (for inspections) 14.6
Definition 3.3.113
Noncombustible material
Definition 3.3.110.2
Masonry fireplaces, firestopping for 11.2.5.2
Unlisted metal chimneys, interior installation of 8.2.2.2.1, 8.3.3.2.1
Nonresidential, high-heat appliances
Chimney and vent connectors ..... 9.2.5, Table 9.5.1.1, 9.7.6
Chimneys
Masonry 7.2.1.3, 7.2.3, 7.2.14.4, 7.3.1.5
Selection ..... Table 5.2.2.1
Unlisted metal (smokestacks) 8.4
Clearances ..... Table 9.5.1.1
Definition 3.3.3.9
Mounting 12.5.4
Nonresidential, low-heat appliances
Chimney and vent connectors ..... 9.2.3, Table 9.5.1.1
Chimneys
Masonry 7.2.3, 7.2.4, 7.3.1.4
Selection ..... Table 5.2.2.1, 6.1.3.5
Unlisted metal (smokestacks) 8.2
Clearances ..... Table 9.5.1.1
Definition 3.3.3.10
Mounting 12.5.2
Vent selection ..... Table 5.2.3.2
Nonresidential, medium-heat appliances
Chimney and vent connectors ..... 9.2.4, Table 9.5.1.1, 9.7.6
Chimneys
Masonry 7.2.3, 7.2.14.4
Selection ..... Table 5.2.2.1, 6.1.3.1
Unlisted metal (smokestacks) 8.3
Clearances ..... Table 9.5.1.1
Definition 3.3.3.11
Mounting 12.5.3
Nonresidential appliances, 1400°F
Chimney selection ..... Table 5.2.2.1
Definition 3.3.3.8

-O-

Oil appliances
Chimney and vent connectors ..... 9.2.2.3, Table 9.5.1.1, 9.7.3, 9.7.12, 9.7.13, 9.8.3, 9.9.1, 13.3
Draft regulators A.9.11
Masonry chimneys A.7.1.12
Vents 10.1.2
One- and two-family dwellings, metal chimney use for 8.1.1
Operating malfunction 13.8

-P-

Pellet fuel–burning appliances
Chimneys
Masonry 7.2.7, A.7.1.1.2
Selection ..... Table 5.2.2.1
Definition 3.3.3.5.2
Flue size 14.5.2.5.1
Vent selection ..... Table 5.2.3.2
Pellet fuel (definition) 3.3.87.1
Pellet vents ..... *see* Vents
Plenums 4.4.1, 4.4.2
Positive pressure, mechanical draft system operating under 9.8.1
Positive-pressure applications, masonry chimneys used for 7.1.12, A.7.1.12
Positive-pressure venting system, above ceiling 4.4.2
Pressure limits, factory-built chimneys 6.1.2, 6.2
Protection systems, clearance ..... Fig. 9.5.1.1, 9.5.1.2, 9.5.2 to 9.5.5, A.9.5.2
Purpose of standard 1.2

-Q-

Qualified agency (definition) 3.3.122

-R-

Radiant room heaters (definition) 3.3.98.1.2
Ranges
Built-in residential-type (definition) 3.3.124.2.1
Bungalow utility-type (definition) 3.3.124.1
Chimney selection ..... Table 5.2.2.1
Definitions 3.3.124
Mounting 12.5.1.2
Residential-type (definition) 3.3.124.2
Restaurant-type
Chimney and vent connector clearances ..... Table 9.5.1.1
Definition 3.3.124.3
Room heater-type (definition) 3.3.124.4
Vent selection ..... Table 5.2.3.2
Readily accessible (for inspections) ..... *see* Accessible (for inspections)
References ..... Chap. 2, Annex B
Residential-type heating appliances
Chimney and vent connectors ..... Table 9.5.1.1, 9.7.4, 9.7.5, Fig. 9.7.5

Copyright National Fire Protection Association
Provided by IHS under license with NFPA
No reproduction or networking permitted without license from IHS
Not for Resale

Chimneys
Factory-built ..... *see* Factory-built chimneys
Masonry 7.2.1.2, 7.2.4, 7.3.1.4
Selection ..... Table 5.2.2.1, 6.1.3.5
Unlisted metal (smokestacks) 8.2
Connectors 9.7.4, 9.7.5
Definition 3.3.3.6.3
Mounting 12.5.1
Residential-type incinerators ..... *see* Incinerators
Residential-type ranges (definition) 3.3.124.2
Restaurant-type ranges
Chimney and vent connector clearances ..... Table 9.5.1.1
Definition 3.3.124.3
Retroactivity of standard 1.3
Return air plenums 4.4.2
Roof jacks (definition) 3.3.130
Room heater/fireplace stoves, combination
Definition 3.3.78.1
Mounting 12.5.1.2
Room heaters
Chimney selection ..... Table 5.2.2.1
Circulating (definition) 3.3.98.1.1
Definition 3.3.98.1
Mounting 12.5.1.2
Radiant (definition) 3.3.98.1.2
Solid fuel (definition) 3.3.98.1.3
Vent selection ..... Table 5.2.3.2
Room heater-type ranges (definition) 3.3.124.4
Room large in comparison with the size of the appliance (definition) 3.3.133

-S-

Scope of standard 1.1
Screening material, use of 4.6.2
Sealed combustion system appliances (direct vent appliances)
Definition 3.3.3.2
Uses/installation 10.7.1
Seismic design
Masonry chimneys ..... 7.1.8.3 to 7.1.8.5
Masonry fireplaces 11.2.2, 11.2.3
Unlisted metal chimneys 8.1.3.2
Shall (definition) 3.2.5
Shields ..... *see* Wall protectors
Should (definition) 3.2.5
Smoke chambers ..... 11.2.1.9 to 11.2.1.13
Definition 3.3.134
Inspections 14.4.2.7, A.14.5, A.14.6
Smokestacks ..... *see* Unlisted metal chimneys
Smoke test
Definition 3.3.135
Masonry chimneys 7.1.7
Solid fuel–burning appliances ..... Chap. 12
Accessories 12.7
Air for combustion and ventilation 12.3
Chimney and vent connectors ..... 9.2.2.3, 12.4, A.12.4.4, A.12.4.5.1(4)
Clearances ..... Table 9.5.1.1, 12.4.2
Dampers 9.9.3
Inspections 12.4.3
Masonry fireplaces, connection to 12.4.5
Chimneys
Existing flue use 12.4.6
Flue cross-sectional area 12.4.4, A.12.4.4
Selection ..... Table 5.2.2.1, 6.1.3.1
Spark arresters, use of 4.6.3
Usage ..... 12.4, A.12.4.4, A.12.4.5.1(4)
Clearances ..... 12.6, Table 12.6.1, Table 12.6.2.1
Definition 3.3.3.5.3
Draft regulators 9.11.2
Inspection and cleaning 12.4.3, 14.5.2.5.1
Interconnection to other appliances 9.8.2
Listing 12.1
Location 12.2, A.12.2.1
Masonry fireplaces, connection to ..... 12.4.5, A.12.4.5.1(4)
Mechanical draft systems, use of ..... 4.1.2.5(2)
Mounting 12.5
Vents 10.1.2
Solid fuel (definition) 3.3.87.2
Solid fuel room heaters (definition) 3.3.98.1.3
Solid masonry construction 7.2.1.1
Definition 3.3.139
Solid masonry units 11.2.1.1
Definition 3.3.156.1
Spark arresters
Chimneys and vents 4.6, 7.4.3.3
Definition 3.3.141
Inspections 13.3, A.14.4
Special gas vents ..... *see* Gas vents
Splay (wash) A.14.5
Definition 3.3.168
Steel fireplace units
Definition 3.3.156.2
Uses/installation 11.2.4
Supplementary boilers (definition) 3.3.15.5
Supplementary furnaces (definition) 3.3.88.13
Systems ..... *see* Engineered venting or chimney systems; Venting systems (flue gases)

-T-

Temperature limits, factory-built chimneys 6.1.2, 6.2
Termination (height) 4.2
Commercial-industrial incinerator chimneys 7.4.3.3
Inspections 14.4.2.2
Masonry chimneys ..... Table 7.2, 7.4.3.3
Mechanical draft venting systems 10.4.5
Natural draft venting systems 4.2.2, 10.4.2, 10.4.3
Spark arresters, use of 4.6.3.2, 7.4.3.3
Unlisted metal chimneys (smokestacks) 8.2.1, 8.3.2, 8.4.2
Vents 10.4
Thimbles 9.7.1
Definition 3.3.148
Inspections 14.4.2.2
Masonry chimneys 7.1.9
Unlisted metal chimneys 8.2.2.2.7
Unlisted single-wall metal pipe vents 10.6.4.2, 10.6.4.3
Trimmers (definition) 3.3.149
Type 1 and Type 2 clothes dryers ..... *see* Clothes dryers
Type B gas vents
Connectors ..... 9.2.2.1, 9.2.2.2, Table 9.5.1.1, 9.6, 9.7.3, 13.3
Definition 3.3.159.1.2
Installation ..... 10.6.1, 10.6.4.1 to 10.6.4.2
Masonry chimney liners, use as ..... 7.2.5(2), 7.2.9.1
Notice of usage 10.5.2
Uses 10.1.1, 10.1.2
Type BW gas vents
Definition 3.3.159.1.3
Installation 10.6.1
Selection ..... Table 5.2.3.2
Uses 10.1.2, 10.1.3
Type HT factory-built, residential type and/or building heating appliance type chimney 6.1.3.2, 6.1.3.5, A.6.1.3.2
Definition 3.3.32.1.3
Type L gas vents 10.1.5
Connectors ..... 9.2.2.1, 9.2.2.2, 9.2.2.3, Table 9.5.1.1, 9.6, 9.7.3
Definition 3.3.159.3
Installation 10.6.1
Selection ..... Table 5.2.3.2

Copyright National Fire Protection Association
Provided by IHS under license with NFPA
No reproduction or networking permitted without license from IHS
Not for Resale

-U-

Unit heaters
Chimney and vent connector clearances ..... Table 9.5.1.1
Definition 3.3.98.2
Vent selection ..... Table 5.2.3.2
Units
Solid masonry units 11.2.1.1
Definition 3.3.156.1
Steel fireplace
Definition 3.3.156.2
Uses/installation 11.2.4
Unlisted metal chimneys (smokestacks)
Clearances
Exterior 8.2.2.1, 8.3.3.1
Interior 8.2.2.2, 8.3.3.2
Construction 8.3.1, 8.4.1
Definition 3.3.32.6
Foundations and supports 8.1.6
High-heat nonresidential appliances 8.4
Installation ..... Fig. 5.1.1(c)
Low-heat nonresidential appliances 8.2
Medium-heat nonresidential appliances 8.3
Nonresidential applications, for ..... Chap. 8
One- and two-family dwellings, use in 8.1.1
Residential-type heating appliances 8.2
Selection ..... Table 5.2.2.1
Sheet steel chimneys, minimum thickness of 8.1.2.1
Sizing 8.1.8, A.8.1.8
Termination 8.2.1, 8.3.2, 8.4.2
Upflow-type, forced-air, central warm-air furnaces (definition) 3.3.88.5

-V-

Vent caps 4.6, 10.4.1.2
Definition 3.3.22.2
Vent connectors ..... Chap. 9
Attics, appliances installed in 9.2.2.1, 9.6
Clearances ..... 9.5, Fig. 9.5.1.1, Table 9.5.1.1, Table 9.5.1.2, 9.7.5, A.9.5.2
Dampers 9.9
Definition 3.3.52.2
Draft hoods 9.10
Inspections 13.3, 13.4.1, A.14.4, A.14.5
Installation 9.7, A.9.7.9
Interconnection 9.8
Length ..... 9.3, A.9.3.1(3)
Location 9.6
Materials ..... 9.2, Table 9.2.2.3
Natural draft 4.1.5
Required 9.1
Size 9.4
Thimbles 7.1.9.1
Vented appliances (definition) 3.3.3.12
Vent gases
Definition 3.3.91.2
Removal 4.1.1
Ventilating hoods 10.7.2, A.10.7.2.1
Venting
Definition 3.3.164
Solid fuel–burning appliances 12.3
Special arrangements 10.7, A.10.7.2.1
Venting systems (flue gases) ..... *see also* Engineered venting or chimney systems; Mechanical draft venting systems; Natural draft venting systems
Above ceiling spaces 4.4.2
Definition 3.3.147.2
In ducts 4.4
Size A.14.5
Vents ..... Chap. 10; *see also* Draft; Gas vents
Definition 3.3.159, A.3.3.159
Inspection and maintenance 13.1, 13.2, 13.7, 13.8, A.14.4, A.14.5
Installation 10.6, A.10.6
Integral 10.7.4
Location 10.3
Notice of usage 10.5
Pellet
Definition 3.3.159.2
Inspections 13.3
Masonry chimney liners, use as ..... 7.2.7(2), 7.2.9.1
Notice of usage 10.5.2
Selection ..... Table 5.2.3.2
Termination 10.4.1
Selection ..... 5.2, Table 5.2.3.2
Size 10.2
Termination 10.4
Types and uses 10.1
Unlisted single-wall metal pipe 10.6.4

-W-

Wall furnaces
Definition 3.3.88.14
Fan-type (definition) 3.3.88.14.1
Gravity-type (definition) 3.3.88.14.2
Vents ..... Table 5.2.3.2, 10.1.2
Wall protectors (shields) ..... Fig. 9.5.1.1, 9.5.1.2, Table 9.5.1.2, 9.5.2 to 9.5.5, A.9.5.2, A.14.5
Definition 3.3.167
Warning devices ..... 4.1.2.5(3), A.4.1.2.5(3)
Wash A.14.5
Definition 3.3.168
Water heaters
Chimney and vent connector clearances ..... Table 9.5.1.1
Definition 3.3.98.3
Vents ..... Table 5.2.3.2, 10.7.2.2, 10.7.2.3
Wind loads
Masonry chimneys 7.1.8.5
Unlisted metal chimneys 8.1.3.2
Wythe (definition) 3.3.170

Copyright National Fire Protection Association
Provided by IHS under license with NFPA
No reproduction or networking permitted without license from IHS
Not for Resale

Sequence of Events Leading to Issuance of an NFPA Committee Document

Step 1: Call for Proposals

- Proposed new Document or new edition of an existing Document is entered into one of two yearly revision cycles, and a Call for Proposals is published.

Step 2: Report on Proposals (ROP)

- Committee meets to act on Proposals, to develop its own Proposals, and to prepare its Report.
- Committee votes by written ballot on Proposals. If two-thirds approve, Report goes forward. Lacking two-thirds approval, Report returns to Committee.
- Report on Proposals (ROP) is published for public review and comment.

Step 3: Report on Comments (ROC)

- Committee meets to act on Public Comments to develop its own Comments, and to prepare its report.
- Committee votes by written ballot on Comments. If two-thirds approve, Report goes forward. Lacking two-thirds approval, Report returns to Committee.
- Report on Comments (ROC) is published for public review.

Step 4: Technical Report Session

- "*Notices of intent to make a motion"* are filed, are reviewed, and valid motions are certified for presentation at the Technical Report Session. ("Consent Documents" that have no certified motions bypass the Technical Report Session and proceed to the Standards Council for issuance.)
- NFPA membership meets each June at the Annual Meeting Technical Report Session and acts on Technical Committee Reports (ROP and ROC) for Documents with "certified amending motions."
- Committee(s) vote on any amendments to Report approved at NFPA Annual Membership Meeting.

Step 5: Standards Council Issuance

- Notification of intent to file an appeal to the Standards Council on Association action must be filed within 20 days of the NFPA Annual Membership Meeting.
- Standards Council decides, based on all evidence, whether or not to issue Document or to take other action, including hearing any appeals.

Committee Membership Classifications

The following classifications apply to Technical Committee members and represent their principal interest in the activity of the committee.

M *Manufacturer:* A representative of a maker or marketer of a product, assembly, or system, or portion thereof, that is affected by the standard.

U *User:* A representative of an entity that is subject to the provisions of the standard or that voluntarily uses the standard.

I/M *Installer/Maintainer:* A representative of an entity that is in the business of installing or maintaining a product, assembly, or system affected by the standard.

L *Labor:* A labor representative or employee concerned with safety in the workplace.

R/T *Applied Research/Testing Laboratory:* A representative of an independent testing laboratory or independent applied research organization that promulgates and/or enforces standards.

E *Enforcing Authority:* A representative of an agency or an organization that promulgates and/or enforces standards.

I *Insurance:* A representative of an insurance company, broker, agent, bureau, or inspection agency.

C *Consumer:* A person who is, or represents, the ultimate purchaser of a product, system, or service affected by the standard, but who is not included in the *User* classification.

SE *Special Expert:* A person not representing any of the previous classifications, but who has a special expertise in the scope of the standard or portion thereof.

NOTES;
1. "Standard" connotes code, standard, recommended practice, or guide.
2. A representative includes an employee.
3. While these classifications will be used by the Standards Council to achieve a balance for Technical Committees, the Standards Council may determine that new classifications of members or unique interests need representation in order to foster the best possible committee deliberations on any project. In this connection, the Standards Council may make appointments as it deems appropriate in the public interest, such as the classification of "Utilities" in the National Electrical Code Committee.
4. Representatives of subsidiaries of any group are generally considered to have the same classification as the parent organization.

Copyright National Fire Protection Association
Provided by IHS under license with NFPA
No reproduction or networking permitted without license from IHS
Not for Resale

NFPA Technical Committee Document Proposal Form

Note: All proposals must be received by 5:00 p.m. EST/EDST on the published proposal closing date.

For further information on the standards-making process, please contact Codes and Standards Administration at 617-984-7249. For technical assistance, please call NFPA at 617-770-3000.

FOR OFFICE USE ONLY
Log #: _____
Date Rec'd: _____

Please indicate in which format you wish to receive your ROP/ROC: ☐ **CD ROM** ☐ **paper** ☐ **download**
(Note: In choosing the download option you intend to view the ROP/ROC from our Website. No copy will be sent to you.)

Date 12/18/02 **Name** John B. Smith **Telephone** 617-555-1212
Company _____
Address 9 Seattle St. **City** Seattle **State** WA **Zip** 02255
Please indicate organization represented (if any) Fire Marshals Assn. of North America

1. **a) NFPA Document Title** National Fire Alarm Code
   b) NFPA No. & Edition NFPA 72, 2002 ed. **c) Section/Paragraph** 4.4.7.1.1

2. **Proposal Recommends:** *(check one)* ☐ **new text** ☐ **revised text** ☒ **deleted text**

3. **Proposal.** *(Include proposed new or revised wording, or identification of wording to be deleted.)* Note: Proposed text should be in legislative format, that is, use underscore to denote wording to be inserted (inserted wording) and strike-through to denote wording to be deleted (~~deleted wording~~). Delete exception.

4. **Statement of Problem and Substantiation for Proposal.** Note: State the problem that will be resolved by your recommendation. Give the specific reason for your proposal including copies of tests, research papers, fire experience, etc. If more than 200 words, it may be abstracted for publication. A properly installed and maintained system should be free of ground faults. The occurrence of one or more ground faults should be required to cause a "trouble" signal because it indicates a condition that could contribute to future malfunction of the system. Ground fault protection has been widely available on these systems for years and its cost is negligible. Requiring it on all systems will promote better installations, maintenance and reliability.

5. ☒ **This Proposal is Original Material.** Note: Original material is considered to be the submitter's own idea based on or as a result of his/her own experience, thought, or research and, to the best of his/her knowledge, is not copied from another source.

   ☐ **This Proposal is Not Original Material; Its Source** ***(if known)*** **is as Follows:** _____

Sample

I hereby grant the NFPA all and full rights in copyright to this proposal, and I understand that I acquire no rights in any publication of NFPA in which this proposal in this or another similar or analogous form is used.

Signature ***(Required)*** John B. Smith

PLEASE USE SEPARATE FORM FOR EACH PROPOSAL • NFPA FAX (617) 770-3500

Mail to: Secretary, Standards Council • NFPA • 1 Batterymarch Park • PO Box 9101 • Quincy, MA 02269-9101

Copyright National Fire Protection Association
Provided by IHS under license with NFPA
No reproduction or networking permitted without license from IHS
Not for Resale

NFPA Technical Committee Document Proposal Form

Note: All proposals must be received by 5:00 p.m. EST/EDST on the published proposal closing date.

For further information on the standards-making process, please contact Codes and Standards Administration at 617-984-7249. For technical assistance, please call NFPA at 617-770-3000.

FOR OFFICE USE ONLY
Log #: _____
Date Rec'd: _____

Please indicate in which format you wish to receive your ROP/ROC: ☐ **CD ROM** ☐ **paper** ☐ **download**
(Note: In choosing the download option you intend to view the ROP/ROC from our Website. No copy will be sent to you.)

Date _____ **Name** _____ **Telephone** _____
Company _____
Address _____ **City** _____ **State** _____ **Zip** _____
Please indicate organization represented (if any) _____

1. **a) NFPA Document Title** _____
   b) NFPA No. & Edition _____ **c) Section/Paragraph** _____

2. **Proposal Recommends:** *(check one)* ☐ **new text** ☐ **revised text** ☐ **deleted text**

3. **Proposal.** *(Include proposed new or revised wording, or identification of wording to be deleted.)* Note: Proposed text should be in legislative format, that is, use underscore to denote wording to be inserted (inserted wording) and strike-through to denote wording to be deleted (~~deleted wording~~). _____

4. **Statement of Problem and Substantiation for Proposal.** Note: State the problem that will be resolved by your recommendation. Give the specific reason for your proposal including copies of tests, research papers, fire experience, etc. If more than 200 words, it may be abstracted for publication. _____

5. ☐ **This Proposal is Original Material.** Note: Original material is considered to be the submitter's own idea based on or as a result of his/her own experience, thought, or research and, to the best of his/her knowledge, is not copied from another source.

   ☐ **This Proposal is Not Original Material; Its Source *(if known)* is as Follows:** _____

I hereby grant the NFPA all and full rights in copyright to this proposal, and I understand that I acquire no rights in any publication of NFPA in which this proposal in this or another similar or analogous form is used.

Signature *(Required)* _____

PLEASE USE SEPARATE FORM FOR EACH PROPOSAL • NFPA FAX (617) 770-3500

Mail to: Secretary, Standards Council • NFPA • 1 Batterymarch Park • PO Box 9101 • Quincy, MA 02269-9101

--`,,```,,,,````-`-`,,`,,`,`,,`---

Copyright National Fire Protection Association
Provided by IHS under license with NFPA
No reproduction or networking permitted without license from IHS

Not for Resale