NFPA 20

Standard for the Installation of Stationary Pumps for Fire Protection

2007 Edition

NFPA, 1 Batterymarch Park, Quincy, MA 02169-7471
An International Codes and Standards Organization

Copyright National Fire Protection Association
Provided by IHS under license with NFPA
No reproduction or networking permitted without license from IHS

Not for Resale

IMPORTANT NOTICES AND DISCLAIMERS CONCERNING NFPA DOCUMENTS

NOTICE AND DISCLAIMER OF LIABILITY CONCERNING THE USE OF NFPA DOCUMENTS

NFPA codes, standards, recommended practices, and guides, of which the document contained herein is one, are developed through a consensus standards development process approved by the American National Standards Institute. This process brings together volunteers representing varied viewpoints and interests to achieve consensus on fire and other safety issues. While the NFPA administers the process and establishes rules to promote fairness in the development of consensus, it does not independently test, evaluate, or verify the accuracy of any information or the soundness of any judgments contained in its codes and standards.

The NFPA disclaims liability for any personal injury, property or other damages of any nature whatsoever, whether special, indirect, consequential or compensatory, directly or indirectly resulting from the publication, use of, or reliance on this document. The NFPA also makes no guaranty or warranty as to the accuracy or completeness of any information published herein.

In issuing and making this document available, the NFPA is not undertaking to render professional or other services for or on behalf of any person or entity. Nor is the NFPA undertaking to perform any duty owed by any person or entity to someone else. Anyone using this document should rely on his or her own independent judgment or, as appropriate, seek the advice of a competent professional in determining the exercise of reasonable care in any given circumstances.

The NFPA has no power, nor does it undertake, to police or enforce compliance with the contents of this document. Nor does the NFPA list, certify, test or inspect products, designs, or installations for compliance with this document. Any certification or other statement of compliance with the requirements of this document shall not be attributable to the NFPA and is solely the responsibility of the certifier or maker of the statement.

Copyright National Fire Protection Association
Provided by IHS under license with NFPA
No reproduction or networking permitted without license from IHS
Not for Resale

ADDITIONAL NOTICES AND DISCLAIMERS

Updating of NFPA Documents

Users of NFPA codes, standards, recommended practices, and guides should be aware that these documents may be superseded at any time by the issuance of new editions or may be amended from time to time through the issuance of Tentative Interim Amendments. An official NFPA document at any point in time consists of the current edition of the document together with any Tentative Interim Amendments and any Errata then in effect. In order to determine whether a given document is the current edition and whether it has been amended through the issuance of Tentative Interim Amendments or corrected through the issuance of Errata, consult appropriate NFPA publications such as the National Fire Codes® Subscription Service, visit the NFPA website at www.nfpa.org, or contact the NFPA at the address listed below.

Interpretations of NFPA Documents

A statement, written or oral, that is not processed in accordance with Section 6 of the Regulations Governing Committee Projects shall not be considered the official position of NFPA or any of its Committees and shall not be considered to be, nor be relied upon as, a Formal Interpretation.

Patents

The NFPA does not take any position with respect to the validity of any patent rights asserted in connection with any items which are mentioned in or are the subject of NFPA codes, standards, recommended practices, and guides, and the NFPA disclaims liability for the infringement of any patent resulting from the use of or reliance on these documents. Users of these documents are expressly advised that determination of the validity of any such patent rights, and the risk of infringement of such rights, is entirely their own responsibility.

NFPA adheres to applicable policies of the American National Standards Institute with respect to patents. For further information contact the NFPA at the address listed below.

Law and Regulations

Users of these documents should consult applicable federal, state, and local laws and regulations. NFPA does not, by the publication of its codes, standards, recommended practices, and guides, intend to urge action that is not in compliance with applicable laws, and these documents may not be construed as doing so.

Copyrights

This document is copyrighted by the NFPA. It is made available for a wide variety of both public and private uses. These include both use, by reference, in laws and regulations, and use in private self-regulation, standardization, and the promotion of safe practices and methods. By making this document available for use and adoption by public authorities and private users, the NFPA does not waive any rights in copyright to this document.

Use of NFPA documents for regulatory purposes should be accomplished through adoption by reference. The term “adoption by reference” means the citing of title, edition, and publishing information only. Any deletions, additions, and changes desired by the adopting authority should be noted separately in the adopting instrument. In order to assist NFPA in following the uses made of its documents, adopting authorities are requested to notify the NFPA (Attention: Secretary, Standards Council) in writing of such use. For technical assistance and questions concerning adoption of NFPA documents, contact NFPA at the address below.

For Further Information

All questions or other communications relating to NFPA codes, standards, recommended practices, and guides and all requests for information on NFPA procedures governing its codes and standards development process, including information on the procedures for requesting Formal Interpretations, for proposing Tentative Interim Amendments, and for proposing revisions to NFPA documents during regular revision cycles, should be sent to NFPA headquarters, addressed to the attention of the Secretary, Standards Council, NFPA, 1 Batterymarch Park, P.O. Box 9101, Quincy, MA 02269-9101.

For more information about NFPA, visit the NFPA website at www.nfpa.org.

--`,,```,,,,````-`-`,,`,,`,`,,`---

Copyright National Fire Protection Association
Provided by IHS under license with NFPA
No reproduction or networking permitted without license from IHS

Not for Resale

Copyright © 2006 National Fire Protection Association. All Rights Reserved.

NFPA 20

Standard for the

Installation of Stationary Pumps for Fire Protection

2007 Edition

This edition of NFPA 20, *Standard for the Installation of Stationary Pumps for Fire Protection*, was prepared by the Technical Committee on Fire Pumps. It was issued by the Standards Council on July 28, 2006, with an effective date of August 17, 2006, and supersedes all previous editions.

This edition of NFPA 20 was approved as an American National Standard on August 17, 2006.

Origin and Development of NFPA 20

The first National Fire Protection Association standard for automatic sprinklers was published in 1896 and contained paragraphs on steam and rotary fire pumps.

The Committee on Fire Pumps was organized in 1899 with five members from underwriter associations. Today, the committee membership includes representatives of Underwriters Laboratories of both the United States and Canada, Insurance Services Offices, Factory Mutual, Industrial Risk Insurers, national trade associations, state government, engineering organizations, and private individuals.

Early fire pumps were only secondary supplies for sprinklers, standpipes, and hydrants and were started manually. Today, fire pumps have greatly increased in number and in applications — many are the major or only water supply, and almost all are started automatically. Early pumps usually took suction by lift from standing or flowing water supplies because the famed National Standard Steam Fire Pump and rotary types suited that service. Ascendancy of the centrifugal pump resulted in positive head supply to horizontal shaft pumps from public water supplies and aboveground tanks. Later, vertical shaft turbine–type pumps were lowered into wells or into wet pits supplied from ponds or other belowground sources of water.

Gasoline engine-driven pumps first appeared in this standard in 1913. From an early status of relative unreliability and of supplementary use only, first spark-ignited gasoline engines and then compression ignition diesels have steadily developed engine-driven pumps to a place alongside electric-driven units for total reliability.

Fire protection now calls for larger pumps, higher pressures, and more varied units for a wide range of systems protecting both life and property. Hydraulically calculated and designed sprinkler and special fire protection systems have changed concepts of water supply completely.

Since the formation of this Committee, each edition of NFPA 20 has incorporated appropriate provisions to cover new developments and has omitted obsolete provisions. NFPA action on successive editions has been taken in the following years: 1907, 1910-13, 1915, 1918-21, 1923-29, 1931-33, 1937, 1939, 1943, 1944, 1946-48, 1951, 1953, 1955, 1957, 1959-72, 1974, 1976, 1978, 1980, 1983, 1987, 1990, 1993, 1996, and 1999.

The 1990 edition included several amendments with regard to some of the key components associated with electric-driven fire pumps. In addition, amendments were made to allow the document to conform more closely to the NFPA *Manual of Style*.

The 1993 edition included significant revisions to Chapters 6 and 7 with regard to the arrangement of the power supply to electric-driven fire pumps. These clarifications were intended to provide the necessary requirements in order to make the system as reliable as possible.

The 1996 edition continued the changes initiated in the 1993 edition as Chapters 6 and 7, which addressed electric drives and controllers, underwent significant revision. New information was also added regarding engine-cooling provisions, earthquake protection, and backflow preventers. Chapter 5, which addressed provisions for high-rise buildings, was removed, as were capacity limitations on in-line and end suction pumps. Additionally, provisions regarding suction pipe fittings were updated.

Copyright National Fire Protection Association
Provided by IHS under license with NFPA
No reproduction or networking permitted without license from IHS
Not for Resale

The 1999 edition of the standard included requirements for positive displacement pumps for both water mist and foam systems. The document title was revised to reflect this change, since the 1999 edition addressed requirements for pumps other than centrifugal. Enforceable language was added, particularly regarding protection of equipment.

Revisions for the 2003 edition included updating the document to conform with the latest edition of the *Manual of Style for NFPA Technical Committee Documents*. Provisions were also added to address the use of fire pump drivers using variable speed pressure limiting control. Acceptance test criteria were added to the document for replacement of critical path components of a fire pump installation.

For the 2007 edition, requirements for variable speed drives were refined, requirements for break tanks were added, and component replacement testing tables were included.

Copyright National Fire Protection Association
Provided by IHS under license with NFPA
No reproduction or networking permitted without license from IHS
Not for Resale

Technical Committee on Fire Pumps

John D. Jensen, *Chair*
Fire Protection Consultant, UT [SE]

Frank L. Moore, *Nonvoting Secretary*
Moore Pump and Equipment, Inc., MS [IM]
(Alt. to A. A. Dorini)

Thomas R. Boccetti, The DuPont Company, DE [U]
Rep. NFPA Industrial Fire Protection Section
Pat D. Brock, Oklahoma State University, OK [SE]
Hugh D. Castles, Entergy Services, Inc., LA [U]
Rep. Edison Electric Institute
Phillip A. Davis, Allianz Global Risks, IL [I]
Alan A. Dorini, Gulfstream Pump and Equipment, Inc., FL [IM]
George W. Flach, George W. Flach Consultant, Inc., LA [SE]
David B. Fuller, FM Global, MA [I]
Dana R. Haagensen, Massachusetts Office of the Fire Marshal, MA [E]
Bill M. Harvey, Harvey and Associates, Inc., SC [IM]
Rep. American Fire Sprinkler Association
Hatem Ezzat Kheir, Kheir Group, Egypt [IM]
Timothy S. Killion, Peerless Pump Company, IN [M]
John R. Kovacik, Underwriters Laboratories Inc., IL [RT]
R. T. Leicht, State of Delaware, DE [E]
Rep. International Fire Marshals Association
Stephen A. Mezsick, Eli Lilly and Company, IN [U]
Rep. American Chemistry Council
David S. Mowrer, HSB Professional Loss Control, TN [I]
Gayle Pennel, Schirmer Engineering Corporation, IL [I]
Jeffrey R. Roberts, GE Insurance Solutions, MS [I]
Matthew Roy, S.A. Armstrong, Ltd., Canada [M]
Richard Schneider, Joslyn Clark Controls, SC [M]
Rep. National Electrical Manufacturers Association
Darrell A. Snyder, Patterson Pump Company, GA [M]
Rep. Hydraulic Institute
Hansford Stewart, ITT A-C Fire Pump Systems, IL [M]
Terry L. Victor, Tyco/SimplexGrinnell, MD [IM]
Rep. National Fire Sprinkler Association
Lawrence J. Wenzel, Hughes Associates, Inc., CT [SE]
John Whitney, Clarke Fire Protection Products, Inc., OH [M]
Rep. Engine Manufacturers Association
Garry W. Yaffe, U.S. Department of Energy, SC [U]

Alternates

Kerry M. Bell, Underwriters Laboratories Inc., IL [RT]
(Alt. to J. R. Kovacik)
Tim Fernholtz, Sterling Fluid Systems-Peerless Pump, CA [M]
(Alt. to T. S. Killion)
Brandon W. Frakes, GE Insurance Solutions, NC [I]
(Alt. to J. R. Roberts)
Kenneth E. Isman, National Fire Sprinkler Association, NY [IM]
(Alt. to T. L. Victor)
James J. Koral, General Motors, NY [U]
(Alt. to T. R. Boccetti)
Timothy J. LaRose, Hughes Associates, Inc., RI [SE]
(Alt. to L. J. Wenzel)
Gary Lauer, ITT A-C Fire Pump Systems, IL [M]
(Alt. to H. Stewart)
Charles W. McKnight, Bechtel National Inc., WA [U]
(Alt. to G. W. Yaffe)
J. Scott Mitchell, American Fire Sprinkler Association, TX [IM]
(Alt. to B. M. Harvey)
Michael R. Moran, State of Delaware, DE [E]
(Alt. to R. T. Leicht)
Jay Reddy, R-B Pump, Inc., GA [M]
(Alt. to D. A. Snyder)
William F. Stelter, Master Control Systems, Inc., IL [M]
(Alt. to R. Schneider)
David M. Whitfield, S-P-D Incorporated, IL [M]
(Voting Alt. to IFPA Rep.)
Shay Pei Wu, Schirmer Engineering Corporation, MD [I]
(Alt. to G. Pennel)

Nonvoting

Edward D. Leedy, Naperville, IL
(Member Emeritus)
James W. Nolan, James W. Nolan Company, IL
(Member Emeritus)

David R. Hague, NFPA Staff Liaison

This list represents the membership at the time the Committee was balloted on the final text of this edition. Since that time, changes in the membership may have occurred. A key to classifications is found at the back of the document.

NOTE: Membership on a committee shall not in and of itself constitute an endorsement of the Association or any document developed by the committee on which the member serves.

Committee Scope: This Committee shall have primary responsibility for documents on the selection and installation of stationary pumps supplying water or special additives including but not limited to foam concentrates for private fire protection, including suction piping, valves and auxiliary equipment, electric drive and control equipment, and internal combustion engine drive and control equipment.

Copyright National Fire Protection Association
Provided by IHS under license with NFPA
No reproduction or networking permitted without license from IHS
Not for Resale

Contents

Chapter 1 Administration **20–** 6
1.1 Scope **20–** 6
1.2 Purpose **20–** 6
1.3 Application **20–** 6
1.4 Retroactivity **20–** 6
1.5 Equivalency **20–** 6
1.6 Units **20–** 6

Chapter 2 Referenced Publications **20–** 6
2.1 General **20–** 6
2.2 NFPA Publications **20–** 7
2.3 Other Publications **20–** 7
2.4 References for Extracts in Mandatory Sections **20–** 7

Chapter 3 Definitions **20–** 7
3.1 General **20–** 7
3.2 NFPA Official Definitions **20–** 7
3.3 General Definitions **20–** 8

Chapter 4 Reserved **20–** 11

Chapter 5 General Requirements **20–** 11
5.1 Pumps **20–** 11
5.2 Approval Required **20–** 11
5.3 Pump Operation **20–** 11
5.4 Fire Pump Unit Performance **20–** 11
5.5 Certified Shop Test **20–** 11
5.6 Liquid Supplies **20–** 11
5.7 Pumps, Drivers, and Controllers. **20–** 11
5.8 Centrifugal Fire Pump Capacities **20–** 12
5.9 Nameplate **20–** 12
5.10 Pressure Gauges **20–** 12
5.11 Circulation Relief Valve **20–** 12
5.12 Equipment Protection **20–** 12
5.13 Pipe and Fittings **20–** 13
5.14 Suction Pipe and Fittings **20–** 13
5.15 Discharge Pipe and Fittings **20–** 15
5.16 Valve Supervision **20–** 15
5.17 Protection of Piping Against Damage Due to Movement **20–** 15
5.18 Relief Valves for Centrifugal Pumps **20–** 15
5.19 Water Flow Test Devices **20–** 16
5.20 Power Supply Dependability **20–** 17
5.21 Shop Tests **20–** 17
5.22 Pump Shaft Rotation **20–** 17
5.23 Other Signals **20–** 17
5.24 Pressure Maintenance (Jockey or Make-Up) Pumps **20–** 17
5.25 Summary of Centrifugal Fire Pump Data **20–** 17
5.26 Backflow Preventers and Check Valves **20–** 17
5.27 Earthquake Protection **20–** 17
5.28 Packaged Fire Pump Systems **20–** 18
5.29 Pressure Sensing Lines **20–** 18
5.30 Break Tanks **20–** 19
5.31 Field Acceptance Test of Pump Units **20–** 20

Chapter 6 Centrifugal Pumps **20–** 20
6.1 General **20–** 20
6.2 Factory and Field Performance **20–** 20
6.3 Fittings **20–** 20
6.4 Foundation and Setting **20–** 20
6.5 Connection to Driver and Alignment **20–** 20

Chapter 7 Vertical Shaft Turbine–Type Pumps **20–** 20
7.1 General **20–** 20
7.2 Water Supply **20–** 21
7.3 Pump **20–** 22
7.4 Installation **20–** 23
7.5 Driver **20–** 23
7.6 Operation and Maintenance **20–** 24

Chapter 8 Positive Displacement Pumps **20–** 24
8.1 General **20–** 24
8.2 Foam Concentrate and Additive Pumps **20–** 24
8.3 Water Mist System Pumps **20–** 24
8.4 Fittings **20–** 25
8.5 Pump Drivers **20–** 25
8.6 Controllers **20–** 25
8.7 Foundation and Setting **20–** 25
8.8 Driver Connection and Alignment **20–** 25
8.9 Flow Test Devices **20–** 25

Chapter 9 Electric Drive for Pumps **20–** 25
9.1 General **20–** 25
9.2 Normal Power **20–** 26
9.3 Alternate Power **20–** 26
9.4 Voltage Drop **20–** 27
9.5 Motors **20–** 27
9.6 On-Site Standby Generator Systems **20–** 28

Chapter 10 Electric-Drive Controllers and Accessories **20–** 28
10.1 General **20–** 28
10.2 Location **20–** 28
10.3 Construction **20–** 28
10.4 Components **20–** 29
10.5 Starting and Control **20–** 31
10.6 Controllers Rated in Excess of 600 V **20–** 33
10.7 Limited Service Controllers **20–** 33
10.8 Power Transfer for Alternate Power Supply **20–** 34
10.9 Controllers for Additive Pump Motors **20–** 35
10.10 Controllers with Variable Speed Pressure Limiting Control. **20–** 36

Copyright National Fire Protection Association
Provided by IHS under license with NFPA
No reproduction or networking permitted without license from IHS
Not for Resale

Chapter 11 Diesel Engine Drive **20–** 36
11.1 General **20–** 36
11.2 Engines **20–** 37
11.3 Pump and Engine Protection **20–** 41
11.4 Fuel Supply and Arrangement **20–** 41
11.5 Engine Exhaust **20–** 42
11.6 Driver System Operation **20–** 42

Chapter 12 Engine Drive Controllers **20–** 43
12.1 Application **20–** 43
12.2 Location **20–** 43
12.3 Construction **20–** 43
12.4 Components **20–** 44
12.5 Starting and Control **20–** 45
12.6 Air-Starting Engine Controllers **20–** 46

Chapter 13 Steam Turbine Drive **20–** 48
13.1 General **20–** 48
13.2 Turbine **20–** 48
13.3 Installation **20–** 49

Chapter 14 Acceptance Testing, Performance, and Maintenance **20–** 49
14.1 Hydrostatic Tests and Flushing **20–** 49
14.2 Field Acceptance Tests **20–** 49
14.3 Manuals, Special Tools, and Spare Parts **20–** 51
14.4 Periodic Inspection, Testing, and Maintenance **20–** 51
14.5 Component Replacement **20–** 51

Annex A Explanatory Material **20–** 54

Annex B Possible Causes of Pump Troubles **20–** 87

Annex C Informational References **20–** 90

Annex D Material Extracted by NFPA 70, Article 695 ..... **20–** 90

Index **20–** 93

Copyright National Fire Protection Association
Provided by IHS under license with NFPA
No reproduction or networking permitted without license from IHS
Not for Resale

NFPA 20

Standard for the

Installation of Stationary Pumps for Fire Protection

2007 Edition

IMPORTANT NOTE: This NFPA document is made available for use subject to important notices and legal disclaimers. These notices and disclaimers appear in all publications containing this document and may be found under the heading "Important Notices and Disclaimers Concerning NFPA Documents." They can also be obtained on request from NFPA or viewed at www.nfpa.org/disclaimers.

NOTICE: An asterisk (*) following the number or letter designating a paragraph indicates that explanatory material on the paragraph can be found in Annex A.

Changes other than editorial are indicated by a vertical rule beside the paragraph, table, or figure in which the change occurred. These rules are included as an aid to the user in identifying changes from the previous edition. Where one or more complete paragraphs have been deleted, the deletion is indicated by a bullet (•) between the paragraphs that remain.

A reference in brackets [ ] following a section or paragraph indicates material that has been extracted from another NFPA document. As an aid to the user, the complete title and edition of the source documents for extracts in mandatory sections of the document are given in Chapter 2 and those for extracts in informational sections are given in Annex C. Editorial changes to extracted material consist of revising references to an appropriate division in this document or the inclusion of the document number with the division number when the reference is to the original document. Requests for interpretations or revisions of extracted text shall be sent to the technical committee responsible for the source document.

Information on referenced publications can be found in Chapter 2 and Annex C.

Chapter 1 Administration

1.1* Scope.

1.1.1 This standard deals with the selection and installation of pumps supplying liquid for private fire protection.

1.1.2 The scope of this document shall include liquid supplies; suction, discharge, and auxiliary equipment; power supplies, including power supply arrangements; electric drive and control; diesel engine drive and control; steam turbine drive and control; and acceptance tests and operation.

1.1.3 This standard does not cover system liquid supply capacity and pressure requirements, nor does it cover requirements for periodic inspection, testing, and maintenance of fire pump systems.

1.1.4 This standard does not cover the requirements for installation wiring of fire pump units.

1.2 Purpose. The purpose of this standard is to provide a reasonable degree of protection for life and property from fire through installation requirements for stationary pumps for fire protection based upon sound engineering principles, test data, and field experience.

1.3 Application.

1.3.1 This standard shall apply to centrifugal single-stage and multistage pumps of the horizontal or vertical shaft design and positive displacement pumps of the horizontal or vertical shaft design.

1.3.2 Requirements are established for the design and installation of single-stage and multistage pumps, pump drivers, and associated equipment.

1.4 Retroactivity. The provisions of this standard reflect a consensus of what is necessary to provide an acceptable degree of protection from the hazards addressed in this standard at the time the standard was issued.

1.4.1 Unless otherwise specified, the provisions of this standard shall not apply to facilities, equipment, structures, or installations that existed or were approved for construction or installation prior to the effective date of the standard. Where specified, the provisions of this standard shall be retroactive.

1.4.2 In those cases where the authority having jurisdiction determines that the existing situation presents an unacceptable degree of risk, the authority having jurisdiction shall be permitted to apply retroactively any portions of this standard deemed appropriate.

1.4.3 The retroactive requirements of this standard shall be permitted to be modified if their application clearly would be impractical in the judgment of the authority having jurisdiction, and only where it is clearly evident that a reasonable degree of safety is provided.

1.5 Equivalency. Nothing in this standard is intended to prevent the use of systems, methods, or devices of equivalent or superior quality, strength, fire resistance, effectiveness, durability, and safety over those prescribed by this standard.

1.5.1 Technical documentation shall be submitted to the authority having jurisdiction to demonstrate equivalency.

1.5.2 The system, method, or device shall be approved for the intended purpose by the authority having jurisdiction.

1.6 Units.

1.6.1 Metric units of measurement in this standard are in accordance with the modernized metric system known as the International System of Units (SI).

1.6.2 Liter and bar in this standard are outside of but recognized by SI.

1.6.3 Units are listed in Table 1.6.3 with conversion factors.

1.6.4 Conversion. The conversion procedure is to multiply the quantity by the conversion factor and then round the result to an appropriate number of significant digits.

1.6.5 Trade Sizes. Where industry utilizes nominal dimensions to represent materials, products, or performance, direct conversions have not been utilized and appropriate trade sizes have been included.

Chapter 2 Referenced Publications

2.1 General. The documents or portions thereof listed in this chapter are referenced within this standard and shall be considered part of the requirements of this document.

Copyright National Fire Protection Association
Provided by IHS under license with NFPA
No reproduction or networking permitted without license from IHS
Not for Resale

Table 1.6.3 System of Units

Name of Unit	Unit Abbreviation	Conversion Factor
meter	m	1 ft = 0.3048 m
feet	ft	1 m = 3.281 ft
millimeter	mm	1 in. = 25.4 mm
inch	in.	1 mm = 0.03937 in.
liter	L	1 gal = 3.785 L
gallon (U.S.)	gal	1 L = 0.2642 gal
cubic decimeter	dm^3	1 gal = 3.785 dm^3
cubic meter	m^3	1 ft^3 = 0.0283 m^3
cubic feet	ft^3	1 m^3 = 35.31 ft^3
pascal	Pa	1 psi = 6894.757 Pa; 1 bar = 10^5 Pa
pounds per square inch	psi	1 Pa = 0.000145 psi; 1 bar = 14.5 psi
bar	bar	1 Pa = 10^{-5} bar; 1 psi = 0.0689 bar

Note: For additional conversions and information, see IEEE/ASTM SI10, *Standard for Use of the International System of Units (SI): The Modern Metric System.*

2.2 NFPA Publications. National Fire Protection Association, 1 Batterymarch Park, Quincy, MA 02169-7471.

NFPA 13, *Standard for the Installation of Sprinkler Systems,* 2007 edition.

NFPA 22, *Standard for Water Tanks for Private Fire Protection,* 2003 edition.

NFPA 24, *Standard for the Installation of Private Fire Service Mains and Their Appurtenances,* 2007 edition.

NFPA 25, *Standard for the Inspection, Testing, and Maintenance of Water-Based Fire Protection Systems,* 2002 edition.

NFPA 51B, *Standard for Fire Prevention During Welding, Cutting, and Other Hot Work,* 2003 edition.

NFPA 70, *National Electrical Code®,* 2005 edition.

NFPA *101®, Life Safety Code®,* 2006 edition.

NFPA 110, *Standard for Emergency and Standby Power Systems,* 2005 edition.

NFPA 1963, *Standard for Fire Hose Connections,* 2003 edition.

2.3 Other Publications.

2.3.1 AGMA Publications. American Gear Manufacturers Association, 1500 King Street, Suite 201, Alexandria, VA 22314-2730.

AGMA 390.03, *Handbook for Helical and Master Gears*, 1995.

2.3.2 ANSI Publications. American National Standards Institute, Inc., 25 West 43rd Street, 4th Floor, New York, NY 10036.

ANSI B15.1, *Mechanical Power Transmission Apparatus*, 1992.

ANSI/IEEE C62.1, *IEEE Standard for Gapped Silicon-Carbide Surge Arresters for AC Power Circuits*, 1989.

ANSI/IEEE C62.11, *IEEE Standard for Metal-Oxide Surge Arresters for Alternating Current Power Circuits (>1 kV)*, 1999.

ANSI/IEEE C62.41, *IEEE Recommended Practice for Surge Voltages in Low-Voltage AC Power Circuits*, 1991.

2.3.3 IEEE Publications. Institute of Electrical and Electronics Engineers, Three Park Avenue, 17th Floor, New York, NY 10016-5997.

IEEE/ ASTM SI10, *Standard for Use of the International System of Units (SI): The Modern Metric System*, 2003.

2.3.4 HI Publications. Hydraulics Institute, 1230 Keith Building, Cleveland, OH 44115.

Hydraulics Institute Standards for Centrifugal, Rotary and Reciprocating Pumps, 14th edition, 1983.

HI 3.6, *Rotary Pump Tests*, 1994.

2.3.5 NEMA Publications. National Electrical Manufacturers Association, 1300 North 17th Street, Suite 1847, Rosslyn, VA 22209.

NEMA MG-1, *Motors and Generators*, 1998.

2.3.6 UL Publications. Underwriters Laboratories Inc., 333 Pfingsten Road, Northbrook, IL 60062-2096.

ANSI/UL 508, *Standard for Industrial Control Equipment*, 1999.

2.3.7 Other Publications. *Merriam-Webster's Collegiate Dictionary,* 11th edition, Merriam-Webster, Inc., Springfield, MA, 2003.

2.4 References for Extracts in Mandatory Sections.

NFPA 14, *Standard for the Installation of Standpipe and Hose Systems,* 2007 edition.

NFPA 37, *Standard for the Installation and Use of Stationary Combustion Engines and Gas Turbines*, 2006 edition.

NFPA 70, *National Electrical Code®,* 2005 edition.

NFPA 110, *Standard for Emergency and Standby Power Systems,* 2005 edition.

NFPA 1451, *Standard for a Fire Service Vehicle Operations Training Program,* 2002 edition.

NFPA 5000®, Building Construction and Safety Code®, 2006 edition.

Chapter 3 Definitions

3.1 General. The definitions contained in this chapter shall apply to the terms used in this standard. Where terms are not defined in this chapter or within another chapter, they shall be defined using their ordinarily accepted meanings within the context in which they are used. *Merriam-Webster's Collegiate Dictionary,* 11th edition, shall be the source for the ordinarily accepted meaning.

3.2 NFPA Official Definitions.

3.2.1* Approved. Acceptable to the authority having jurisdiction.

3.2.2* Authority Having Jurisdiction (AHJ). An organization, office, or individual responsible for enforcing the requirements of a code or standard, or for approving equipment, materials, an installation, or a procedure.

3.2.3* Listed. Equipment, materials, or services included in a list published by an organization that is acceptable to the authority having jurisdiction and concerned with evaluation of products or services, that maintains periodic inspection of production of listed equipment or materials or periodic evaluation of services, and whose listing states that either the equipment, material, or service meets appropriate designated standards or has been tested and found suitable for a specified purpose.

Copyright National Fire Protection Association
Provided by IHS under license with NFPA
No reproduction or networking permitted without license from IHS
Not for Resale

3.2.4 Shall. Indicates a mandatory requirement.

3.2.5 Should. Indicates a recommendation or that which is advised but not required.

3.2.6 Standard. A document, the main text of which contains only mandatory provisions using the word "shall" to indicate requirements and which is in a form generally suitable for mandatory reference by another standard or code or for adoption into law. Nonmandatory provisions shall be located in an appendix or annex, footnote, or fine-print note and are not to be considered a part of the requirements of a standard.

3.3 General Definitions.

3.3.1 Additive. A liquid such as foam concentrates, emulsifiers, and hazardous vapor suppression liquids and foaming agents intended to be injected into the water stream at or above the water pressure.

3.3.2 Aquifer. An underground formation that contains sufficient saturated permeable material to yield significant quantities of water.

3.3.3 Aquifer Performance Analysis. A test designed to determine the amount of underground water available in a given field and proper well spacing to avoid interference in that field. Basically, test results provide information concerning transmissibility and storage coefficient (available volume of water) of the aquifer.

3.3.4 Automatic Transfer Switch. See 3.3.47.2.1.

3.3.5 Branch Circuit. See 3.3.7.1.

3.3.6 Break Tank. A tank providing suction to a fire pump whose capacity is less than the fire protection demand (flow rate times flow duration).

3.3.7 Circuit.

3.3.7.1 ***Branch Circuit.*** The circuit conductors between the final overcurrent device protecting the circuit and the outlet(s). [**70,** 2005]

3.3.7.2 ***Fault Tolerant External Control Circuit.*** Those control circuits either entering or leaving the fire pump controller enclosure, which if broken, disconnected, or shorted will not prevent the controller from starting the fire pump from all other internal or external means and can cause the controller to start the pump under these conditions.

3.3.8 Circulation Relief Valve. See 3.3.54.5.1.

3.3.9 Corrosion-Resistant Material. Materials such as brass, copper, Monel, stainless steel, or other equivalent corrosion-resistant materials.

3.3.10 Diesel Engine. See 3.3.13.1.

3.3.11 Disconnecting Means. A device, group of devices, or other means whereby the conductors of a circuit can be disconnected from their source of supply. [**70,** 2005]

3.3.12 Drawdown. The vertical difference between the pumping water level and the static water level.

3.3.13 Engine.

3.3.13.1 ***Diesel Engine.*** An internal combustion engine in which the fuel is ignited entirely by the heat resulting from the compression of the air supplied for combustion. The oil-diesel engine, which operates on fuel oil injected after compression is practically completed, is the type usually used as a fire pump driver.

3.3.13.2 ***Internal Combustion Engine.*** Any engine in which the working medium consists of the products of combustion of the air and fuel supplied. This combustion usually is effected within the working cylinder but can take place in an external chamber.

3.3.14 Fault Tolerant External Control Circuit. See 3.3.7.2.

3.3.15 Feeder. All circuit conductors between the service equipment, the source of a separately derived system, or other power supply source and the final branch-circuit overcurrent device. [**70,** 2005]

3.3.16 Fire Pump Alarm. A supervisory signal indicating an abnormal condition requiring immediate attention.

3.3.17 Fire Pump Controller. A group of devices that serve to govern, in some predetermined manner, the starting and stopping of the fire pump driver and to monitor and signal the status and condition of the fire pump unit.

3.3.18 Fire Pump Unit. An assembled unit consisting of a fire pump, driver, controller, and accessories.

3.3.19 Flexible Connecting Shaft. A device that incorporates two flexible joints and a telescoping element.

3.3.20 Flexible Coupling. A device used to connect the shafts or other torque-transmitting components from a driver to the pump, and that permits minor angular and parallel misalignment as restricted by both the pump and coupling manufacturers.

3.3.21 Flooded Suction. The condition where water flows from an atmospheric vented source to the pump without the average pressure at the pump inlet flange dropping below atmospheric pressure with the pump operating at 150 percent of its rated capacity.

3.3.22 Groundwater. That water that is available from a well, driven into water-bearing subsurface strata (aquifer).

3.3.23* Head. A quantity used to express a form (or combination of forms) of the energy content of water per unit weight of the water referred to any arbitrary datum.

3.3.23.1 ***Net Positive Suction Head (NPSH) (h_{sw}).*** The total suction head in meters (feet) of liquid absolute, determined at the suction nozzle, and referred to datum, less the vapor pressure of the liquid in meters (feet) absolute.

3.3.23.2 ***Total Discharge Head (h_d).*** The reading of a pressure gauge at the discharge of the pump, converted to meters (feet) of liquid, and referred to datum, plus the velocity head at the point of gauge attachment.

3.3.23.3 ***Total Head.***

3.3.23.3.1* ***Total Head (H), Horizontal Pumps.*** The measure of the work increase, per kilogram (pound) of liquid, imparted to the liquid by the pump, and therefore the algebraic difference between the total discharge head and the total suction head. Total head, as determined on test where suction lift exists, is the sum of the total discharge head and total suction lift. Where positive suction head exists, the total head is the total discharge head minus the total suction head.

Copyright National Fire Protection Association
Provided by IHS under license with NFPA
No reproduction or networking permitted without license from IHS
Not for Resale

3.3.23.3.2* ***Total Head (H), Vertical Turbine Pumps.*** The distance from the pumping liquid level to the center of the discharge gauge plus the total discharge head.

3.3.23.4 ***Total Rated Head.*** The total head developed at rated capacity and rated speed for either a horizontal split-case or a vertical shaft turbine–type pump.

3.3.23.5 ***Total Suction Head.*** Suction head exists where the total suction head is above atmospheric pressure. Total suction head, as determined on test, is the reading of a gauge at the suction of the pump, converted to meters (feet) of liquid, and referred to datum, plus the velocity head at the point of gauge attachment.

3.3.23.6* ***Velocity Head (h_v).*** Figured from the average velocity (v) obtained by dividing the flow in cubic meters per second (cubic feet per second) by the actual area of pipe cross section in square meters (square feet) and determined at the point of the gauge connection.

3.3.24 High-Rise Building. A building greater than 23 m (75 ft) in height where the building height is measured from the lowest level of fire department vehicle access to the floor of the highest occupiable story. [***5000,*** 2006]

3.3.25 Internal Combustion Engine. See 3.3.13.2.

3.3.26 Isolating Switch. See 3.3.47.1.

3.3.27 Liquid. For the purposes of this standard, liquid refers to water, foam-water solution, foam concentrates, water additives, or other liquids for fire protection purposes.

3.3.28 Liquid Level.

3.3.28.1 ***Pumping Liquid Level.*** The level, with respect to the pump, of the body of liquid from which it takes suction when the pump is in operation. Measurements are made the same as with the static liquid level.

3.3.28.2 ***Static Liquid Level.*** The level, with respect to the pump, of the body of liquid from which it takes suction when the pump is not in operation. For vertical shaft turbine–type pumps, the distance to the liquid level is measured vertically from the horizontal centerline of the discharge head or tee.

3.3.29 Loss of Phase. The loss of one or more, but not all, phases of the polyphase power source.

3.3.30 Manual Transfer Switch. See 3.3.47.2.2.

3.3.31 Maximum Pump Brake Horsepower. The maximum brake horsepower required to drive the pump at rated speed. The pump manufacturer determines this by shop test under expected suction and discharge conditions. Actual field conditions can vary from shop conditions.

3.3.32 Motor.

3.3.32.1 ***Dripproof Guarded Motor.*** A dripproof machine whose ventilating openings are guarded in accordance with the definition for dripproof motor.

3.3.32.2 ***Dripproof Motor.*** An open motor in which the ventilating openings are so constructed that successful operation is not interfered with when drops of liquid or solid particles strike or enter the enclosure at any angle from 0 to 15 degrees downward from the vertical.

3.3.32.3 ***Dust-Ignition-Proof Motor.*** A totally enclosed motor whose enclosure is designed and constructed in a manner that will exclude ignitable amounts of dust or amounts that might affect performance or rating and that will not permit arcs, sparks, or heat otherwise generated or liberated inside of the enclosure to cause ignition of exterior accumulations or atmospheric suspensions of a specific dust on or in the vicinity of the enclosure.

3.3.32.4 ***Electric Motor.*** A motor that is classified according to mechanical protection and methods of cooling.

3.3.32.5 ***Explosionproof Motor.*** A totally enclosed motor whose enclosure is designed and constructed to withstand an explosion of a specified gas or vapor that could occur within it and to prevent the ignition of the specified gas or vapor surrounding the motor by sparks, flashes, or explosions of the specified gas or vapor that could occur within the motor casing.

3.3.32.6 ***Guarded Motor.*** An open motor in which all openings giving direct access to live metal or rotating parts (except smooth rotating surfaces) are limited in size by the structural parts or by screens, baffles, grilles, expanded metal, or other means to prevent accidental contact with hazardous parts. Openings giving direct access to such live or rotating parts shall not permit the passage of a cylindrical rod 19 mm (0.75 in.) in diameter.

3.3.32.7 ***Open Motor.*** A motor having ventilating openings that permit passage of external cooling air over and around the windings of the motor. Where applied to large apparatus without qualification, the term designates a motor having no restriction to ventilation other than that necessitated by mechanical construction.

3.3.32.8 ***Totally Enclosed Fan-Cooled Motor.*** A totally enclosed motor equipped for exterior cooling by means of a fan or fans integral with the motor but external to the enclosing parts.

3.3.32.9 ***Totally Enclosed Motor.*** A motor enclosed so as to prevent the free exchange of air between the inside and the outside of the case but not sufficiently enclosed to be termed airtight.

3.3.32.10 ***Totally Enclosed Nonventilated Motor.*** A totally enclosed motor that is not equipped for cooling by means external to the enclosing parts.

3.3.33 Net Positive Suction Head (NPSH) (h_{sv}). See 3.3.23.1.

3.3.34 On-Site Power Production Facility. The normal supply of electric power for the site that is expected to be constantly producing power.

3.3.35 On-Site Standby Generator. A facility producing electric power on site as the alternate supply of electrical power. It differs from an on-site power production facility in that it is not constantly producing power.

3.3.36 Pressure-Regulating Device. A device designed for the purpose of reducing, regulating, controlling, or restricting water pressure. [**14,** 2007]

3.3.37 Pump.

3.3.37.1 ***Additive Pump.*** A pump that is used to inject additives into the water stream.

3.3.37.2 ***Can Pump.*** A vertical shaft turbine–type pump in a can (suction vessel) for installation in a pipeline to raise water pressure.

--`,,```,,,,````-`-`,,`,,`,`,,`---

Copyright National Fire Protection Association
Provided by IHS under license with NFPA
No reproduction or networking permitted without license from IHS
Not for Resale

3.3.37.3 ***Centrifugal Pump.*** A pump in which the pressure is developed principally by the action of centrifugal force.

3.3.37.4 ***End Suction Pump.*** A single suction pump having its suction nozzle on the opposite side of the casing from the stuffing box and having the face of the suction nozzle perpendicular to the longitudinal axis of the shaft.

3.3.37.5 ***Fire Pump.*** A pump that is a provider of liquid flow and pressure dedicated to fire protection.

3.3.37.6 ***Foam Concentrate Pump.*** See 3.3.37.1, Additive Pump.

3.3.37.7 ***Gear Pump.*** A positive displacement pump characterized by the use of gear teeth and casing to displace liquid.

3.3.37.8 ***Horizontal Pump.*** A pump with the shaft normally in a horizontal position.

3.3.37.9 ***Horizontal Split-Case Pump.*** A centrifugal pump characterized by a housing that is split parallel to the shaft.

3.3.37.10 ***In-Line Pump.*** A centrifugal pump whose drive unit is supported by the pump having its suction and discharge flanges on approximately the same centerline.

3.3.37.11 ***Piston Plunger Pump.*** A positive displacement pump characterized by the use of a piston or plunger and cylinder to displace liquid.

3.3.37.12 ***Positive Displacement Pump.*** A pump that is characterized by a method of producing flow by capturing a specific volume of fluid per pump revolution and reducing the fluid void by a mechanical means to displace the pumping fluid.

3.3.37.13 ***Rotary Lobe Pump.*** A positive displacement pump characterized by the use of a rotor lobe to carry fluid between the lobe void and the pump casing from the inlet to the outlet.

3.3.37.14 ***Rotary Vane Pump.*** A positive displacement pump characterized by the use of a single rotor with vanes that move with pump rotation to create a void and displace liquid.

3.3.37.15 ***Vertical Lineshaft Turbine Pump.*** A vertical shaft centrifugal pump with rotating impeller or impellers and with discharge from the pumping element coaxial with the shaft. The pumping element is suspended by the conductor system, which encloses a system of vertical shafting used to transmit power to the impellers, the prime mover being external to the flow stream.

3.3.38 Pumping Liquid Level. See 3.3.28.1.

3.3.39 Qualified Person. A person who, by possession of a recognized degree, certificate, professional standing, or skill, and who, by knowledge, training, and experience, has demonstrated the ability to deal with problems relating to a particular subject matter, work, or project. [**1451,** 2002]

3.3.40* Service. The conductors and equipment for delivering electric energy from the serving utility to the wiring system of the premises served. [**70,** 2005]

3.3.41* Service Equipment. The necessary equipment, usually consisting of a circuit breaker(s) or switch(es) and fuse(s) and their accessories, connected to the load end of service conductors to a building or other structure, or an otherwise designated area, and intended to constitute the main control and cutoff of the supply. [**70,** 2005]

3.3.42 Service Factor. A multiplier of an ac motor that, when applied to the rated horsepower, indicates a permissible horsepower loading that can be carried at the rated voltage, frequency, and temperature. For example, the multiplier 1.15 indicates that the motor is permitted to be overloaded to 1.15 times the rated horsepower.

3.3.43 Set Pressure. As applied to variable speed pressure limiting control systems, the pressure that the variable speed pressure limiting control system is set to maintain.

3.3.44* Signal. An indicator of status.

3.3.45 Speed.

3.3.45.1 ***Engine Speed.*** The speed indicated on the engine nameplate.

3.3.45.2 ***Motor Speed.*** The speed indicated on the motor nameplate.

3.3.45.3 ***Rated Speed.*** The speed for which the fire pump is listed and appears on the fire pump nameplate.

3.3.46 Static Liquid Level. See 3.3.28.2.

3.3.47 Switch.

3.3.47.1 ***Isolating Switch.*** A switch intended for isolating an electric circuit from its source of power. It has no interrupting rating, and it is intended to be operated only after the circuit has been opened by some other means.

3.3.47.2 ***Transfer Switch.***

3.3.47.2.1 ***Automatic Transfer Switch.*** Self-acting equipment for transferring one or more load conductor connections from one power source to another. [**110,** 2005]

3.3.47.2.2 ***Manual Transfer Switch.*** A switch operated by direct manpower for transferring one or more load conductor connections from one power source to another.

3.3.48 Total Discharge Head (h_d). See 3.3.23.2.

3.3.49 Total Head (H), Horizontal Pumps. See 3.3.23.3.1.

3.3.50 Total Head (H), Vertical Turbine Pumps. See 3.3.23.3.2.

3.3.51 Total Rated Head. See 3.3.23.4.

3.3.52 Total Suction Head (h_s). See 3.3.23.5.

3.3.53 Total Suction Lift (h_l). Suction lift that exists where the total suction head is below atmospheric pressure. Total suction lift, as determined on test, is the reading of a liquid manometer at the suction nozzle of the pump, converted to meters (feet) of liquid, and referred to datum, minus the velocity head at the point of gauge attachment.

3.3.54 Valve.

3.3.54.1 ***Dump Valve.*** An automatic valve installed on the discharge side of a positive displacement pump to relieve pressure prior to the pump driver reaching operating speed.

3.3.54.2 ***Low Suction Throttling Valve.*** A pilot-operated valve installed in discharge piping that maintains positive pressure in the suction piping, while monitoring pressure in the suction piping through a sensing line.

Copyright National Fire Protection Association
Provided by IHS under license with NFPA
No reproduction or networking permitted without license from IHS
Not for Resale

3.3.54.3 ***Pressure Control Valve.*** A pilot-operated pressure-reducing valve designed for the purpose of reducing the downstream water pressure to a specific value under both flowing (residual) and nonflowing (static) conditions. [**14,** 2007]

3.3.54.4 ***Pressure-Reducing Valve.*** A valve designed for the purpose of reducing the downstream water pressure under both flowing (residual) and nonflowing (static) conditions. [**14,** 2007]

3.3.54.5 ***Relief Valve.*** A device that allows the diversion of liquid to limit excess pressure in a system.

3.3.54.5.1 ***Circulation Relief Valve.*** A valve used to cool a pump by discharging a small quantity of water, this valve is separate from and independent of the main relief valve.

3.3.54.6 ***Unloader Valve.*** A valve that is designed to relieve excess flow below pump capacity at set pump pressure.

3.3.55 Variable Speed Pressure Limiting Control. A speed control system used to limit the total discharge pressure by reducing the pump driver speed from rated speed.

3.3.56 Velocity Head (h_v). See 3.3.23.6.

3.3.57 Wet Pit. A timber, concrete, or masonry enclosure having a screened inlet kept partially filled with water by an open body of water such as a pond, lake, or stream.

Chapter 4 Reserved

Chapter 5 General Requirements

5.1 Pumps.

5.1.1 This standard shall apply to centrifugal single-stage and multistage pumps of the horizontal or vertical shaft design and positive displacement pumps of the horizontal or vertical shaft design.

5.1.2 Other Pumps.

5.1.2.1 Pumps other than those specified in this standard and having different design features shall be permitted to be installed where such pumps are listed by a testing laboratory.

5.1.2.2 These pumps shall be limited to capacities of less than 500 gpm (1892 L/min).

5.2* Approval Required.

5.2.1 Stationary pumps shall be selected based on the conditions under which they are to be installed and used.

5.2.2 The pump manufacturer or its authorized representative shall be given complete information concerning the liquid and power supply characteristics.

5.2.3 A complete plan and detailed data describing pump, driver, controller, power supply, fittings, suction and discharge connections, and liquid supply conditions shall be prepared for approval.

5.2.4 Each pump, driver, controlling equipment, power supply and arrangement, and liquid supply shall be approved by the authority having jurisdiction for the specific field conditions encountered.

5.3 Pump Operation. In the event of fire pump operation, qualified personnel shall respond to the fire pump location to determine that the fire pump is operating in a satisfactory manner.

5.4 Fire Pump Unit Performance.

5.4.1* The fire pump unit, consisting of a pump, driver, and controller, shall perform in compliance with this standard as an entire unit when installed or when components have been replaced.

5.4.2 The complete fire pump unit shall be field acceptance tested for proper performance in accordance with the provisions of this standard. *(See Section 14.2.)*

5.5 Certified Shop Test.

5.5.1 Certified shop test curves showing head capacity and brake horsepower of the pump shall be furnished by the manufacturer to the purchaser.

5.5.2 The purchaser shall furnish the data required in 5.5.1 to the authority having jurisdiction.

5.6 Liquid Supplies.

5.6.1* Reliability. The adequacy and dependability of the water source are of primary importance and shall be fully determined, with due allowance for its reliability in the future.

5.6.2* Sources.

5.6.2.1 Any source of water that is adequate in quality, quantity, and pressure shall be permitted to provide the supply for a fire pump.

5.6.2.2 Where the water supply from a public service main is not adequate in quality, quantity, or pressure, an alternative water source shall be provided.

5.6.2.3 The adequacy of the water supply shall be determined and evaluated prior to the specification and installation of the fire pump.

5.6.2.4 For liquids other than water, the liquid source for the pump shall be adequate to supply the maximum required flow rate for any simultaneous demands for the required duration and the required number of discharges.

5.6.3 Level. The minimum water level of a well or wet pit shall be determined by pumping at not less than 150 percent of the fire pump rated capacity.

5.6.4* Stored Supply.

5.6.4.1 A stored supply plus reliable automatic refill shall be sufficient to meet the demand placed upon it for the design duration.

5.6.4.2 A reliable method of replenishing the supply shall be provided.

5.6.5 Head.

5.6.5.1 The head available from a water supply shall be figured on the basis of a flow of 150 percent of rated capacity of the fire pump.

5.6.5.2 This head shall be as indicated by a flow test.

5.7 Pumps, Drivers, and Controllers.

5.7.1* Fire pumps shall be dedicated to and listed for fire protection service.

Copyright National Fire Protection Association
Provided by IHS under license with NFPA
No reproduction or networking permitted without license from IHS
Not for Resale

5.7.2 Acceptable drivers for pumps at a single installation shall be electric motors, diesel engines, steam turbines, or a combination thereof.

5.7.3* A pump shall not be equipped with more than one driver.

5.7.4 Each fire pump shall have its own dedicated driver unless otherwise permitted in 8.5.3.1.

5.7.5 Each driver shall have its own dedicated controller.

5.7.6* Maximum Pressure for Centrifugal Pumps.

5.7.6.1 The net pump shutoff (churn) pressure plus the maximum static suction pressure, adjusted for elevation, shall not exceed the pressure for which the system components are rated.

5.7.6.2* Pressure relief valves and pressure regulating devices in the fire pump installation shall not be used as a means to meet the requirements of 5.7.6.1.

5.7.6.3 Variable Speed Pressure Limiting Control.

5.7.6.3.1 Variable speed pressure limiting control drivers, as defined in this standard, shall be acceptable to limit system pressure.

5.7.6.3.2* The set pressure plus the maximum pressure variance of the variable speed pressure limiting controlled systems during variable speed operation and adjusted for elevation shall not exceed the pressure rating of any system component.

5.8* Centrifugal Fire Pump Capacities.

5.8.1 A centrifugal fire pump for fire protection shall be selected to operate at less than or equal to 150 percent of the rated capacity.

5.8.2* Centrifugal fire pumps shall have one of the rated capacities in gpm (L/min) identified in Table 5.8.2 and shall be rated at net pressures of 40 psi (2.7 bar) or more.

Table 5.8.2 Centrifugal Fire Pump Capacities

gpm	L/min	gpm	L/min
25	95	1,000	3,785
50	189	1,250	4,731
100	379	1,500	5,677
150	568	2,000	7,570
200	757	2,500	9,462
250	946	3,000	11,355
300	1,136	3,500	13,247
400	1,514	4,000	15,140
450	1,703	4,500	17,032
500	1,892	5,000	18,925
750	2,839		

5.8.3 Centrifugal fire pumps with ratings over 5000 gpm (18,925 L/min) are subject to individual review by either the authority having jurisdiction or a listing laboratory.

5.9 Nameplate. Pumps shall be provided with a nameplate.

5.10 Pressure Gauges.

5.10.1 Discharge.

5.10.1.1 A pressure gauge having a dial not less than 3.5 in. (89 mm) in diameter shall be connected near the discharge casting with a nominal 0.25 in. (6 mm) gauge valve.

5.10.1.2 The dial shall indicate pressure to at least twice the rated working pressure of the pump but not less than 200 psi (13.8 bar).

5.10.1.3 The face of the dial shall read in bar, pounds per square inch, or both with the manufacturer's standard graduations.

5.10.2* Suction.

5.10.2.1 Unless the requirements of 5.10.2.4 are met, a compound pressure and vacuum gauge having a dial not less than 3.5 in. (89 mm) in diameter shall be connected to the suction pipe near the pump with a nominal 0.25 in. (6 mm) gauge valve.

5.10.2.2 The face of the dial shall read in inches of mercury (millimeters of mercury) or psi (bar) for the suction range.

5.10.2.3 The gauge shall have a pressure range two times the rated maximum suction pressure of the pump, but not less than 100 psi (6.9 bar).

5.10.2.4 The requirements of 5.10.2 shall not apply to vertical shaft turbine–type pumps taking suction from a well or open wet pit.

5.11 Circulation Relief Valve.

5.11.1 Automatic Relief Valve.

5.11.1.1 Unless the requirements of 5.11.1.7 are met, each pump(s) shall have an automatic relief valve listed for the fire pump service installed and set below the shutoff pressure at minimum expected suction pressure.

5.11.1.2 The valve shall be installed on the discharge side of the pump before the discharge check valve.

5.11.1.3 The valve shall provide flow of sufficient water to prevent the pump from overheating when operating with no discharge.

5.11.1.4 Provisions shall be made for discharge to a drain.

5.11.1.5 Circulation relief valves shall not be tied in with the packing box or drip rim drains.

5.11.1.6 The automatic relief valve shall have a nominal size of 0.75 in. (19 mm) for pumps with a rated capacity not exceeding 2500 gpm (9462 L/min) and have a nominal size of 1 in. (25 mm) for pumps with a rated capacity of 3000 gpm to 5000 gpm (11,355 L/min to 18,925 L/min).

5.11.1.7 The requirements of 5.11.1 shall not apply to engine-driven pumps for which engine cooling water is taken from the pump discharge.

5.11.2 Combination with Pressure Relief Valve. Where a pressure relief valve has been piped back to suction, a circulation relief valve shall be provided and the size shall be in accordance with 5.11.1.6.

5.12* Equipment Protection.

5.12.1* General Requirements. The fire pump, driver, controller, water supply, and power supply shall be protected against possible interruption of service through damage caused by ex-

Copyright National Fire Protection Association
Provided by IHS under license with NFPA
No reproduction or networking permitted without license from IHS
Not for Resale

plosion, fire, flood, earthquake, rodents, insects, windstorm, freezing, vandalism, and other adverse conditions.

5.12.1.1* Indoor Fire Pump Units.

5.12.1.1.1* Indoor fire pumps in high-rise buildings shall be physically separated or protected by 2-hour fire-rated construction.

5.12.1.1.2 Indoor fire pumps in non-high-rise buildings shall be physically separated or protected by fire-rated construction in accordance with Table 5.12.1.1.2.

Table 5.12.1.1.2 Equipment Protection

Pump Room/House	Building(s) Exposing Pump Room/House	Required Separation
Not sprinklered	Not sprinklered	2 hour fire-rated or 50 ft (15.3 m)
Not sprinklered	Fully sprinklered	
Fully sprinklered	Not sprinklered	
Fully sprinklered	Fully sprinklered	1 hour fire-rated or 50 ft (15.3 m)

5.12.1.1.3 Location and access to the fire pump room shall be pre-planned with the fire department.

5.12.1.1.4 Rooms containing fire pumps shall be free from storage and penetrations not essential to the operation of the pump and related components.

5.12.1.2 Outdoor Fire Pump Units.

5.12.1.2.1 Fire pump units located outdoors shall be located at least 50 ft (15.3 m) away from any exposing building.

5.12.1.2.2 Outdoor installations also shall be required to be provided with protection against possible interruption in accordance with 5.12.1.

5.12.1.3 Fire Pump Buildings or Rooms with Diesel Engines. Fire pump buildings or rooms enclosing diesel engine pump drivers and day tanks shall be protected with an automatic sprinkler system installed in accordance with NFPA 13, *Standard for the Installation of Sprinkler Systems.*

5.12.2 Heat.

5.12.2.1 An approved or listed source of heat shall be provided for maintaining the temperature of a pump room or pump house, where required, above 40°F (5°C).

5.12.2.2 The requirements of 11.6.5 shall be followed for higher temperature requirements for internal combustion engines.

5.12.3 Normal Lighting. Artificial light shall be provided in a pump room or pump house.

5.12.4 Emergency Lighting.

5.12.4.1 Emergency lighting shall be provided in accordance with NFPA *101*, *Life Safety Code.*

5.12.4.2 Emergency lights shall not be connected to an engine-starting battery.

5.12.5 Ventilation. Provision shall be made for ventilation of a pump room or pump house.

5.12.6* Drainage.

5.12.6.1 Floors shall be pitched for adequate drainage of escaping water away from critical equipment such as the pump, driver, controller, and so forth.

5.12.6.2 The pump room or pump house shall be provided with a floor drain that will discharge to a frost-free location.

5.12.7 Guards. Couplings and flexible connecting shafts shall be installed with a coupling guard in accordance with Section 8 of ANSI B15.1, *Mechanical Power Transmission Apparatus.*

5.13 Pipe and Fittings.

5.13.1* Steel Pipe.

5.13.1.1 Steel pipe shall be used above ground except for connection to underground suction and underground discharge piping.

5.13.1.2 Where corrosive water conditions exist, steel suction pipe shall be galvanized or painted on the inside prior to installation with a paint recommended for submerged surfaces.

5.13.1.3 Thick bituminous linings shall not be used.

5.13.2* Joining Method.

5.13.2.1 Sections of steel piping shall be joined by means of screwed, flanged mechanical grooved joints or other approved fittings.

5.13.2.2 Slip-type fittings shall be permitted to be used where installed as required by 5.14.6 and where the piping is mechanically secured to prevent slippage.

5.13.3 Concentrate and Additive Piping.

5.13.3.1 Foam concentrate or additive piping shall be a material that will not corrode in this service.

5.13.3.2 Galvanized pipe shall not be used for foam concentrate service.

5.13.4* Cutting and Welding. Torch-cutting or welding in the pump house shall be permitted as a means of modifying or repairing pump house piping when it is performed in accordance with NFPA 51B, *Standard for Fire Prevention During Welding, Cutting, and Other Hot Work.*

5.14 Suction Pipe and Fittings.

5.14.1* Components.

5.14.1.1 The suction components shall consist of all pipe, valves, and fittings from the pump suction flange to the connection to the public or private water service main, storage tank, or reservoir, and so forth, that feeds water to the pump.

5.14.1.2 Where pumps are installed in series, the suction pipe for the subsequent pump(s) shall begin at the system side of the discharge valve of the previous pump.

5.14.2 Installation. Suction pipe shall be installed and tested in accordance with NFPA 24, *Standard for the Installation of Private Fire Service Mains and Their Appurtenances.*

5.14.3 Suction Size.

5.14.3.1 Unless the requirements of 5.14.3.2 are met, the size of the suction pipe for a single pump or of the suction header pipe for multiple pumps (operating together) shall be such

Copyright National Fire Protection Association
Provided by IHS under license with NFPA
No reproduction or networking permitted without license from IHS
Not for Resale

that, with all pumps operating at 150 percent of rated capacity, the gauge pressure at the pump suction flanges shall be 0 psi (0 bar) or higher.

5.14.3.2 The requirements of 5.14.3.1 shall not apply where the supply is a suction tank with its base at or above the same elevation as the pump, where the gauge pressure at the pump suction flange shall be permitted to drop to –3 psi (–0.2 bar) with the lowest water level after the maximum system demand and duration have been supplied.

5.14.3.3 The suction pipe shall be sized such that, with the pump(s) operating at 150 percent of rated capacity, the velocity in that portion of the suction pipe located within 10 pipe diameters upstream of the pump suction flange does not exceed 15 ft/sec (4.57 m/sec).

5.14.3.4 The size of that portion of the suction pipe located within 10 pipe diameters upstream of the pump suction flange shall be not less than that specified in Section 5.25.

5.14.4* Pumps with Bypass.

5.14.4.1 Where the suction supply is of sufficient pressure to be of material value without the pump, the pump shall be installed with a bypass. *(See Figure A.5.14.4.)*

5.14.4.2 The size of the bypass shall be at least as large as the pipe size required for discharge pipe as specified in Section 5.25.

5.14.5* Valves.

5.14.5.1 A listed outside screw and yoke (OS&Y) gate valve shall be installed in the suction pipe.

5.14.5.2 No valve other than a listed OS&Y valve shall be installed in the suction pipe within 50 ft (15.3 m) of the pump suction flange.

5.14.6* Installation.

5.14.6.1 General. Suction pipe shall be laid carefully to avoid air leaks and air pockets, either of which can seriously affect the operation of the pump.

5.14.6.2 Freeze Protection.

5.14.6.2.1 Suction pipe shall be installed below the frost line or in frostproof casings.

5.14.6.2.2 Where pipe enters streams, ponds, or reservoirs, special attention shall be given to prevent freezing either under ground or under water.

5.14.6.3 Elbows and Tees.

5.14.6.3.1 Unless the requirements of 5.14.6.3.2 are met, elbows and tees with a centerline plane parallel to a horizontal split-case pump shaft shall not be permitted. *(See Figure A.5.14.6.)*

5.14.6.3.2 The requirements of 5.14.6.3.1 shall not apply to elbows and tees with a centerline plane parallel to a horizontal split-case pump shaft where the distance between the flanges of the pump suction intake and the elbow and tee is greater than 10 times the suction pipe diameter.

5.14.6.3.3 Elbows with a centerline plane perpendicular to the horizontal split-case pump shaft shall be permitted at any location in the pump suction intake.

5.14.6.4 Eccentric Tapered Reducer or Increaser. Where the suction pipe and pump suction flange are not of the same size, they shall be connected with an eccentric tapered reducer or increaser installed in such a way as to avoid air pockets.

5.14.6.5 Strain Relief. Where the pump and its suction supply are on separate foundations with rigid interconnecting pipe, the pipe shall be provided with strain relief. *(See Figure A.6.3.1.)*

5.14.7 Multiple Pumps. Where a single suction pipe supplies more than one pump, the suction pipe layout at the pumps shall be arranged so that each pump will receive its proportional supply.

5.14.8* Suction Screening.

5.14.8.1 Where the water supply is obtained from an open source such as a pond or wet pit, the passage of materials that might clog the pump shall be obstructed.

5.14.8.2 Double intake screens shall be provided at the suction intake.

5.14.8.3 Screens shall be removable, or an in-situ cleaning shall be provided.

5.14.8.4 Below minimum water level, these screens shall have an effective net area of opening of 1 $in.^2$ for each 1 gpm (170 mm^2 for each 1 L/min) at 150 percent of rated pump capacity.

5.14.8.5 Screens shall be so arranged that they can be cleaned or repaired without disturbing the suction pipe.

5.14.8.6 Mesh screens shall be brass, copper, Monel, stainless steel, or other equivalent corrosion-resistant metallic material wire screen of 0.50 in. (12.7 mm) maximum mesh and No. 10 B&S gauge.

5.14.8.7 Where flat panel mesh screens are used, the wire shall be secured to a metal frame sliding vertically at the entrance to the intake.

5.14.8.8 Where the screens are located in a sump or depression, they shall be equipped with a debris-lifting rake.

5.14.8.9 Periodically, the system shall be test pumped, the screens shall be removed for inspection, and accumulated debris shall be removed.

5.14.8.10 Continuous slot screens shall be brass, copper, Monel, stainless steel, or other equivalent corrosion-resistant metallic material of 0.125 in. (3.2 mm) maximum slot and profile wire construction.

5.14.8.11 Screen shall have at least 62.5 percent open area.

5.14.8.12 Where zebra mussel infestation is present or reasonably anticipated at the site, the screens shall be constructed of a material with demonstrated resistance to zebra mussel attachment or coated with a material with demonstrated resistance to zebra mussel attachment at low velocities.

5.14.8.13 The overall area of the screen shall be 1.6 times the net screen opening area. *(See screen details in Figure A.7.2.2.2.)*

5.14.9* Devices in Suction Piping.

5.14.9.1 No device or assembly, unless identified in 5.14.9.2, that will stop, restrict the starting, or restrict the discharge of a fire pump or pump driver shall be installed in the suction piping.

Copyright National Fire Protection Association
Provided by IHS under license with NFPA
No reproduction or networking permitted without license from IHS
Not for Resale

5.14.9.2 The following devices shall be permitted in the suction piping where the following requirements are met:

(1) Check valves and backflow prevention devices and assemblies shall be permitted where required by other NFPA standards or the authority having jurisdiction.
(2) Where the authority having jurisdiction requires positive pressure to be maintained on the suction piping, a pressure-sensing line for a low suction throttling valve, specifically listed for fire pump service, shall be permitted to be connected to the suction piping.
(3) Devices shall be permitted to be installed in the suction supply piping or stored water supply and arranged to activate a signal if the pump suction pressure or water level falls below a predetermined minimum.
(4) Suction strainers shall be permitted to be installed in the suction piping where required by other sections of this standard.
(5) Other devices specifically permitted or required by this standard shall be permitted.

5.14.10* Vortex Plate. For pump(s) taking suction from a stored water supply, a vortex plate shall be installed at the entrance to the suction pipe. *(See Figure A.6.3.1.)*

5.15 Discharge Pipe and Fittings.

5.15.1 The discharge components shall consist of pipe, valves, and fittings extending from the pump discharge flange to the system side of the discharge valve.

5.15.2 The pressure rating of the discharge components shall be adequate for the maximum total discharge head with the pump operating at shutoff and rated speed, but not less than the rating of the fire protection system.

5.15.3* Steel pipe with flanges, screwed joints, or mechanical grooved joints shall be used above ground.

5.15.4 All pump discharge pipe shall be hydrostatically tested in accordance with NFPA 13, *Standard for the Installation of Sprinkler Systems*, and NFPA 24, *Standard for the Installation of Private Fire Service Mains and Their Appurtenances*.

5.15.5* The size of pump discharge pipe and fittings shall not be less than that given in Section 5.25.

5.15.6* A listed check valve or backflow preventer shall be installed in the pump discharge assembly.

5.15.7 A listed indicating gate or butterfly valve shall be installed on the fire protection system side of the pump discharge check valve.

5.15.8 Where pumps are installed in series, a butterfly valve shall not be installed between pumps.

5.15.9 Low Suction Throttling Valves.

5.15.9.1 Low suction throttling valves that are listed for fire pump service and that are suction pressure sensitive shall be permitted where the authority having jurisdiction requires positive pressure to be maintained on the suction piping.

5.15.9.2 Where required, the low suction throttling valves shall be installed between the pump and the discharge check valve.

5.15.10 No pressure-regulating devices shall be installed in the discharge pipe except as permitted in this standard.

5.16* Valve Supervision.

5.16.1 Supervised Open. Where provided, the suction valve, discharge valve, bypass valves, and isolation valves on the backflow prevention device or assembly shall be supervised open by one of the following methods:

(1) Central station, proprietary, or remote station signaling service
(2) Local signaling service that will cause the sounding of an audible signal at a constantly attended point
(3) Locking valves open
(4) Sealing of valves and approved weekly recorded inspection where valves are located within fenced enclosures under the control of the owner

5.16.2 Supervised Closed. The test outlet control valves shall be supervised closed.

5.17* Protection of Piping Against Damage Due to Movement. A clearance of not less than 1 in. (25 mm) shall be provided around pipes that pass through walls or floors.

5.18 Relief Valves for Centrifugal Pumps.

5.18.1* General.

5.18.1.1 Where a diesel engine fire pump is installed and where a total of 121 percent of the net rated shutoff (churn) pressure plus the maximum static suction pressure, adjusted for elevation, exceeds the pressure for which the system components are rated, a pressure relief valve shall be installed.

5.18.1.2* Pressure relief valves shall be used only where specifically permitted by this standard.

5.18.1.3 Where an electric variable speed pressure limiting control driver is installed, and the maximum total discharge head adjusted for elevation with the pump operating at shutoff and rated speed exceeds the pressure rating of the system components, a pressure relief valve shall be installed.

5.18.2 Size. The relief valve size shall be determined by one of the methods specified in 5.18.2.1 or 5.18.2.2.

5.18.2.1* The relief valve shall be permitted to be sized hydraulically to discharge sufficient water to prevent the pump discharge pressure, adjusted for elevation, from exceeding the pressure rating of the system components.

5.18.2.2 If the relief valve is not sized hydraulically, the relief valve size shall not be less than that given in Section 5.25. *(See also 5.18.7 and A.5.18.7 for conditions that affect size.)*

5.18.3 Location. The relief valve shall be located between the pump and the pump discharge check valve and shall be so attached that it can be readily removed for repairs without disturbing the piping.

5.18.4 Type.

5.18.4.1 Pressure relief valves shall be either a listed spring-loaded or pilot-operated diaphragm type.

5.18.4.2 Pilot-operated pressure relief valves, where attached to vertical shaft turbine pumps, shall be arranged to prevent relieving of water at water pressures less than the pressure relief setting of the valve.

5.18.5* Discharge.

5.18.5.1 The relief valve shall discharge into an open pipe or into a cone or funnel secured to the outlet of the valve.

Copyright National Fire Protection Association
Provided by IHS under license with NFPA
No reproduction or networking permitted without license from IHS
Not for Resale

5.18.5.2 Water discharge from the relief valve shall be readily visible or easily detectable by the pump operator.

5.18.5.3 Splashing of water into the pump room shall be avoided.

5.18.5.4 If a closed-type cone is used, it shall be provided with means for detecting motion of water through the cone.

5.18.5.5 If the relief valve is provided with means for detecting motion (flow) of water through the valve, then cones or funnels at its outlet shall not be required.

5.18.6 Discharge Piping.

5.18.6.1 The relief valve discharge pipe shall be of a size not less than that given in Section 5.25.

5.18.6.2 If the pipe employs more than one elbow, the next larger pipe size shall be used.

5.18.6.3 Relief valve discharge piping returning water back to the supply source, such as an aboveground storage tank, shall be run independently and not be combined with the discharge from other relief valves.

5.18.7* Discharge to Source of Supply. Where the relief valve is piped back to the source of supply, the relief valve and piping shall have sufficient capacity to prevent pressure from exceeding that for which system components are rated.

5.18.8* Discharge to Suction Reservoir. Where the supply of water to the pump is taken from a suction reservoir of limited capacity, the drain pipe shall discharge into the reservoir at a point as far from the pump suction as is necessary to prevent the pump from drafting air introduced by the drain pipe discharge.

5.18.9 Shutoff Valve. A shutoff valve shall not be installed in the relief valve supply or discharge piping.

5.19 Water Flow Test Devices.

5.19.1 General.

5.19.1.1* A fire pump installation shall be arranged to allow the test of the pump at its rated conditions as well as the suction supply at the maximum flow available from the fire pump.

5.19.1.2* Where water usage or discharge is not permitted for the duration of the test specified in Chapter 14, the outlet shall be used to test the pump and suction supply and determine that the system is operating in accordance with the design.

5.19.1.3 The flow shall continue until the flow has stabilized. *(See 14.2.7.4.)*

5.19.2 Meters.

5.19.2.1 Testing Devices.

5.19.2.1.1* Metering devices or fixed nozzles for pump testing shall be listed.

5.19.2.1.2 Metering devices or fixed nozzles shall be capable of water flow of not less than 175 percent of rated pump capacity.

5.19.2.2 All of the meter system piping shall be permitted to be sized hydraulically but shall not be smaller than as specified by the meter manufacturer.

5.19.2.3 If the meter system piping is not sized hydraulically, then all of the meter system piping shall be sized as specified by the meter manufacturer but not less than the meter device sizes shown in Section 5.25.

5.19.2.4 For nonhydraulically sized piping, the minimum size meter for a given pump capacity shall be permitted to be used where the meter system piping does not exceed 100 ft (30.5 m) equivalent length.

5.19.2.4.1 For nonhydraulically sized piping, where meter system piping exceeds 100 ft (30.5 m), including length of straight pipe plus equivalent length in fittings, elevation, and loss through meter, the next larger size of piping shall be used to minimize friction loss.

5.19.2.4.2 The primary element shall be suitable for that pipe size and pump rating.

5.19.2.4.3 The readout instrument shall be sized for the pump-rated capacity. *(See Section 5.25.)*

5.19.3 Hose Valves.

5.19.3.1* General.

5.19.3.1.1 Hose valves shall be listed.

5.19.3.1.2 The number and size of hose valves used for pump testing shall be as specified in Section 5.25.

5.19.3.1.3 Hose valves shall be mounted on a hose valve header and supply piping shall be sized according to Section 5.25.

5.19.3.2 Thread Type. Thread types shall be in compliance with one of the following:

(1) Hose valve(s) shall have the NH standard external thread for the valve size specified, as specified in NFPA 1963, *Standard for Fire Hose Connections.*
(2) Where local fire department connections do not conform to NFPA 1963, the authority having jurisdiction shall designate the threads to be used.

5.19.3.3 Location.

5.19.3.3.1 Where the hose valve header is located outside or at a distance from the pump and there is danger of freezing, a listed indicating butterfly or gate valve and drain valve or ball drip shall be located in the pipeline to the hose valve header.

5.19.3.3.2 The valve required in 5.19.3.3.1 shall be at a point in the line close to the pump. *(See Figure A.6.3.1.)*

5.19.3.4 Pipe Size. The pipe size shall be in accordance with one of the following two methods:

(1) Where the pipe between the hose valve header and connection to the pump discharge pipe is over 15 ft (4.5 m) in length, the next larger pipe size than required by 5.19.3.1.3 shall be used.
(2)* This pipe is permitted to be sized by hydraulic calculations based on a total flow of 150 percent of rated pump capacity, including the following:
   (a) This calculation shall include friction loss for the total length of pipe plus equivalent lengths of fittings, control valve, and hose valves, plus elevation loss, from the pump discharge flange to the hose valve outlets.
   (b) The installation shall be proven by a test flowing the maximum water available.

Copyright National Fire Protection Association
Provided by IHS under license with NFPA
No reproduction or networking permitted without license from IHS
Not for Resale

5.20 Power Supply Dependability.

5.20.1 Steam Supply.

5.20.1.1 Careful consideration shall be given in each case to the dependability of the steam supply and the steam supply system.

5.20.1.2 Consideration shall include the possible effect of fire on transmission piping either in the property or in adjoining buildings that could threaten the property.

5.21 Shop Tests.

5.21.1 General. Each individual pump shall be tested at the factory to provide detailed performance data and to demonstrate its compliance with specifications.

5.21.2 Preshipment Tests.

5.21.2.1 Before shipment from the factory, each pump shall be hydrostatically tested by the manufacturer for a period of time not less than 5 minutes.

5.21.2.2 The test pressure shall not be less than one and one-half times the sum of the pump's shutoff head plus its maximum allowable suction head, but in no case shall it be less than 250 psi (17.24 bar).

5.21.2.3 Pump casings shall be essentially tight at the test pressure.

5.21.2.4 During the test, no objectionable leakage shall occur at any joint.

5.21.2.5 In the case of vertical turbine–type pumps, both the discharge casting and pump bowl assembly shall be tested.

5.22* Pump Shaft Rotation. Pump shaft rotation shall be determined and correctly specified when ordering fire pumps and equipment involving that rotation.

5.23* Other Signals. When required by other sections of this standard, signals shall call attention to improper conditions in the fire pump equipment.

5.24* Pressure Maintenance (Jockey or Make-Up) Pumps.

5.24.1 Pressure maintenance pumps shall have rated capacities not less than any normal leakage rate.

5.24.2 The pumps shall have discharge pressure sufficient to maintain the desired fire protection system pressure.

5.24.3 A check valve shall be installed in the discharge pipe.

5.24.4* Indicating butterfly or gate valves shall be installed in such places as needed to make the pump, check valve, and other miscellaneous fittings accessible for repair.

5.24.5* Excess Pressure.

5.24.5.1 Where a centrifugal-type pressure maintenance pump has a total discharge pressure with the pump operating at shutoff exceeding the working pressure rating of the fire protection equipment, or where a turbine vane (peripheral) type of pump is used, a relief valve sized to prevent overpressuring of the system shall be installed on the pump discharge to prevent damage to the fire protection system.

5.24.5.2 Running period timers shall not be used where jockey pumps are utilized that have the capability of exceeding the working pressure of the fire protection systems.

5.24.6 The primary or standby fire pump shall not be used as a pressure maintenance pump.

5.24.7 Steel pipe shall be used for suction and discharge piping on jockey pumps, which includes packaged prefabricated systems.

5.25 Summary of Centrifugal Fire Pump Data. The sizes indicated in Table 5.25(a) and Table 5.25(b) shall be used as a minimum.

5.26 Backflow Preventers and Check Valves.

5.26.1 Check valves and backflow prevention devices and assemblies shall be listed for fire protection service.

5.26.2 Relief Valve Drainage.

5.26.2.1 Where the backflow prevention device or assembly incorporates a relief valve, the relief valve shall discharge to a drain appropriately sized for the maximum anticipated flow from the relief valve.

5.26.2.2 An air gap shall be provided in accordance with the manufacturer's recommendations.

5.26.2.3 Water discharge from the relief valve shall be readily visible or easily detectable.

5.26.2.4 Performance of the preceding requirements shall be documented by engineering calculations and tests.

5.26.3 Where located in the suction pipe of the pump, check valves and backflow prevention devices or assemblies shall be located a minimum of 10 pipe diameters from the pump suction flange.

5.26.4 Evaluation.

5.26.4.1 Where the authority having jurisdiction requires the installation of a backflow prevention device or assembly in connection with the pump, special consideration shall be given to the increased pressure loss resulting from the installation.

5.26.4.2 Where a backflow prevention device is installed, the final arrangement shall provide effective pump performance with a minimum suction pressure of 0 psi (0 bar) at the gauge at 150 percent of rated capacity.

5.26.4.3 If available suction supplies do not permit the flowing of 150 percent of rated pump capacity, the final arrangement of the backflow prevention device shall provide effective pump performance with a minimum suction pressure of 0 psi (0 bar) at the gauge at the maximum allowable discharge.

5.26.4.4 The discharge shall exceed the fire protection system design flow.

5.26.4.5 Determination of effective pump performance shall be documented by engineering calculations and tests.

5.27 Earthquake Protection.

5.27.1* Unless the requirements of 5.27.2 are met and where local codes require seismic design, the fire pump, driver, diesel fuel tank (where installed), and fire pump controller shall be attached to their foundations with materials capable of resisting lateral movement of horizontal forces equal to one-half the weight of the equipment.

5.27.2 The requirements of 5.27.1 shall not apply where the authority having jurisdiction requires horizontal force factors other than 0.5; in such case NFPA 13, *Standard for the Installation of Sprinkler Systems*, shall apply for seismic design.

Copyright National Fire Protection Association
Provided by IHS under license with NFPA
No reproduction or networking permitted without license from IHS
Not for Resale

Table 5.25(a) Summary of Centrifugal Fire Pump Data (U.S. Customary)

	Minimum Pipe Sizes (Nominal)						
Pump Rating (gpm)	Suction*† (in.)	Discharge* (in.)	Relief Valve (in.)	Relief Valve Discharge (in.)	Meter Device (in.)	Number and Size of Hose Valves (in.)	Hose Header Supply (in.)
25	1	1	¾	1	1¼	1 — 1½	1
50	1½	1¼	1¼	1½	2	1 — 1½	1½
100	2	2	1½	2	2½	1 — 2½	2½
150	2½	2½	2	2½	3	1 — 2½	2½
200	3	3	2	2½	3	1 — 2½	2½
250	3½	3	2	2½	3½	1 — 2½	3
300	4	4	2½	3½	3½	1 — 2½	3
400	4	4	3	5	4	2 — 2½	4
450	5	5	3	5	4	2 — 2½	4
500	5	5	3	5	5	2 — 2½	4
750	6	6	4	6	5	3 — 2½	6
1,000	8	6	4	8	6	4 — 2½	6
1,250	8	8	6	8	6	6 — 2½	8
1,500	8	8	6	8	8	6 — 2½	8
2,000	10	10	6	10	8	6 — 2½	8
2,500	10	10	6	10	8	8 — 2½	10
3,000	12	12	8	12	8	12 — 2½	10
3,500	12	12	8	12	10	12 — 2½	12
4,000	14	12	8	14	10	16 — 2½	12
4,500	16	14	8	14	10	16 — 2½	12
5,000	16	14	8	14	10	20 — 2½	12

* Actual diameter of pump flange is permitted to be different from pipe diameter.
† Applies only to that portion of suction pipe specified in 5.14.3.4.

5.27.3 Pumps with high centers of gravity, such as vertical in-line pumps, shall be mounted at their base and braced above their center of gravity in accordance with the requirements of 5.27.1 or 5.27.2, whichever is applicable.

5.27.4 Where the system riser is also a part of the fire pump discharge piping, a flexible pipe coupling shall be installed at the base of the system riser.

5.28 Packaged Fire Pump Systems.

5.28.1 A packaged pump house and/or skid unit[s] shall include detailed design information acceptable to the authority having jurisdiction.

5.28.2 All electrical components and wiring shall meet the minimum requirements of the applicable NFPA 70, *National Electrical Code,* articles.

5.28.3 Packaged and prefabricated skid unit(s) shall meet all the requirements set forth in Sections 5.12, 5.13, 5.14, and 5.15 as minimum requirements.

5.28.4 Careful consideration shall be given to the possible effects of system component damage during shipment to the project site.

5.28.4.1 The structural integrity shall be maintained with minimal flexing and movement.

5.28.4.2 The necessary supports and restraints shall be installed to prevent damage and breakage during transit.

5.28.5 The packaged fire pump shall have the correct lifting points marked to ensure safe rigging of the unit.

5.28.6 All packaged pump house and/or pump skids shall meet the requirements of Section 5.27 through 5.27.4.

5.28.7 Suction and discharge piping shall be thoroughly inspected, including checking all flanged and mechanical connections per manufacturers' recommendations, after the pump house or skid unit is set in place on the permanent foundation.

5.28.8 The units shall be properly anchored and grouted in accordance with Section 6.4.

5.29 Pressure Sensing Lines.

5.29.1 For all pump installations, including jockey pumps, each controller shall have its own individual pressure-sensing line.

5.29.2 The pressure-sensing line connection for each pump, including jockey pumps, shall be made between that pump's discharge check valve and discharge control valve.

5.29.3 The pressure-sensing line shall be brass, copper, or series 300 stainless steel pipe or tube, and the fittings shall be of ½ in. (15 mm) nominal size.

5.29.4 Check Valves or Ground-Face Unions.

5.29.4.1 Where the requirements of 5.29.4.2 are not met, there shall be two check valves installed in the pressure-sensing line at least 5 ft (1.52 m) apart with a nominal

Copyright National Fire Protection Association
Provided by IHS under license with NFPA
No reproduction or networking permitted without license from IHS
Not for Resale

Table 5.25(b) Summary of Centrifugal Fire Pump Data (Metric)

	Minimum Pipe Sizes (Nominal)						
Pump Rating (L/min)	Suction*† (mm)	Discharge* (mm)	Relief Valve (mm)	Relief Valve Discharge (mm)	Meter Device (mm)	Number and Size of Hose Valves (mm)	Hose Header Supply (mm)
95	25	25	19	25	32	1 — 38	25
189	38	32	32	38	50	1 — 38	38
379	50	50	38	50	65	1 — 65	65
568	65	65	50	65	75	1 — 65	65
757	75	75	50	65	75	1 — 65	65
946	85	75	50	65	85	1 — 65	75
1,136	100	100	65	85	85	1 — 65	75
1,514	100	100	75	125	100	2 — 65	100
1,703	125	125	75	125	100	2 — 65	100
1,892	125	125	100	125	125	2 — 65	100
2,839	150	150	100	150	125	3 — 65	150
3,785	200	150	150	200	150	4 — 65	150
4,731	200	200	150	200	150	6 — 65	200
5,677	200	200	150	200	200	6 — 65	200
7,570	250	250	150	250	200	6 — 65	200
9,462	250	250	200	250	200	8 — 65	250
11,355	300	300	200	300	200	12 — 65	250
13,247	300	300	200	300	250	12 — 65	300
15,140	350	300	200	350	250	16 — 65	300
17,032	400	350	200	350	250	16 — 65	300
18,925	400	350	200	350	250	20 — 65	300

*Actual diameter of pump flange is permitted to be different from pipe diameter.
†Applies only to that portion of suction pipe specified in 5.14.3.4.

0.09375 in. (2.4 mm) hole drilled in the clapper to serve as dampening. *[See Figure A.10.5.2.1(a) and Figure A.10.5.2.1(b).]*

5.29.4.2 Where the water is clean, ground-face unions with noncorrosive diaphragms drilled with a nominal 0.09375 in. (2.4 mm) orifice shall be permitted in place of the check valves.

5.29.5 There shall be no shutoff valve in the pressure-sensing line.

5.29.6 Pressure switch actuation at the low adjustment setting shall initiate pump starting sequence (if pump is not already in operation).

5.30 Break Tanks. Where a break tank is used to provide the pump suction water supply, the installation shall comply with this section.

5.30.1 Application. Break tanks are used for one or more of the following reasons:

(1) As a backflow prevention device between the city water supply and the fire pump suction
(2) To eliminate pressure fluxations in the city water supply and provide a steady suction pressure to the fire pump
(3) To augment the city water supply when the volume of water available from the city is inadequate for the fire protection demand

5.30.2 Break Tank Size. The tank shall be sized for a minimum duration of 15 minutes with the fire pump operating at 150 percent of rated capacity.

5.30.3 Refill Mechanism. The refill mechanism shall be listed and arranged for automatic operation.

5.30.3.1 If the break tank capacity is less than the maximum system demand for 30 minutes, the refill mechanism shall meet the requirements in 5.30.3.1.1 through 5.30.3.1.5.

5.30.3.1.1 Dual automatic refill lines, each capable of refilling the tank at a minimum rate of 150 percent of the fire pump(s) capacity, shall be installed.

5.30.3.1.2 If available supplies do not permit refilling the tank at a minimum rate of 150 percent of the rated pump capacity, each refill line shall be capable of refilling the tank at a rate that meets or exceeds 110 percent of the maximum fire protection system design flow.

5.30.3.1.3 A manual tank fill bypass designed for and capable of refilling the tank at a minimum rate of 150 percent of the fire pump(s) capacity shall be provided.

5.30.3.1.4 If available supplies do not permit refilling the tank at a minimum rate of 150 percent of the rated pump capacity, the manual fill bypass shall be capable of refilling the tank at a rate that meets or exceeds 110 percent of the maximum fire protection system design flow.

5.30.3.1.5 A local visible and audible low liquid level signal shall be provided in the vicinity of the tank fill mechanism.

Copyright National Fire Protection Association
Provided by IHS under license with NFPA
No reproduction or networking permitted without license from IHS
Not for Resale

5.30.3.2 If the break tank is sized to provide a minimum duration of 30 minutes of the maximum system demand, the refill mechanism shall meet the requirements in 5.30.3.2.1 through 5.30.3.2.5.

5.30.3.2.1 The refill mechanism shall be designed for and capable of refilling the tank at 110 percent of the rate required to provide the total fire protection system demand [110% × (Total Demand – Tank Capacity) / Duration].

5.30.3.2.2 A manual tank fill bypass designed for and capable of refilling the tank at 110 percent of the rate required to provide the total fire protection system demand [110% × (Total Demand – Tank Capacity) / Duration].

5.30.3.2.3 The pipe between the city connection and the automatic fill valve shall be installed in accordance with NFPA 24, *Standard for the Installation of Private Fire Service Mains and Their Appurtenances*.

5.30.3.2.4 The automatic filling mechanism shall be maintained at a minimum temperature of 40°F (4.4°C).

5.30.3.2.5 The automatic filling mechanism shall activate a maximum of 6 in. (152 mm) below the overflow level.

5.30.4 The break tank shall be installed in accordance with NFPA 22, *Standard for Water Tanks for Private Fire Protection*.

5.31 Field Acceptance Test of Pump Units. Upon completion of the entire fire pump installation, an acceptance test shall be conducted in accordance with the provisions of this standard. *(See Chapter 14.)*

Chapter 6 Centrifugal Pumps

6.1 General.

6.1.1* Types.

6.1.1.1 Centrifugal pumps shall be of the overhung impeller design and the impeller between bearings design.

6.1.1.2 The overhung impeller design shall be close coupled or separately coupled single- or two-stage end suction-type *[see Figure A.6.1.1(a) and Figure A.6.1.1(b)]* or in-line-type *[see Figure A.6.1.1(c) through Figure A.6.1.1(e)]* pumps.

6.1.1.3 The impeller between bearings design shall be separately coupled single-stage or multistage axial (horizontal) split-case-type *[see Figure A.6.1.1(f)]* or radial (vertical) split-case-type *[see Figure A.6.1.1(g)]* pumps.

6.1.2* Application. Centrifugal pumps shall not be used where a static suction lift is required.

6.2* Factory and Field Performance.

6.2.1 Pumps shall furnish not less than 150 percent of rated capacity at not less than 65 percent of total rated head.

6.2.2 The shutoff head shall not exceed 140 percent of rated head for any type pump. *(See Figure A.6.2.)*

6.3 Fittings.

6.3.1* Where necessary, the following fittings for the pump shall be provided by the pump manufacturer or an authorized representative:

(1) Automatic air release valve
(2) Circulation relief valve
(3) Pressure gauges

6.3.2 Where necessary, the following fittings shall be provided:

(1) Eccentric tapered reducer at suction inlet
(2) Hose valve manifold with hose valves
(3) Flow measuring device
(4) Relief valve and discharge cone
(5) Pipeline strainer

6.3.3 Automatic Air Release.

6.3.3.1 Unless the requirements of 6.3.3.2 are met, pumps that are automatically controlled shall be provided with a listed float-operated air release valve having a nominal 0.50 in. (12.7 mm) minimum diameter discharged to atmosphere.

6.3.3.2 The requirements of 6.3.3.1 shall not apply to overhung impeller-type pumps with top centerline discharge or that are vertically mounted to naturally vent the air.

6.4 Foundation and Setting.

6.4.1* Overhung impeller and impeller between bearings design pumps and driver shall be mounted on a common grouted base plate.

6.4.2 Pumps of the overhung impeller close coupled in-line type *[see Figure A.6.1.1(c)]* shall be permitted to be mounted on a base attached to the pump mounting base plate.

6.4.3 The base plate shall be securely attached to a solid foundation in such a way that proper pump and driver shaft alignment is ensured.

6.4.4* The foundation shall be sufficiently substantial to form a permanent and rigid support for the base plate.

6.4.5 The base plate, with pump and driver mounted on it, shall be set level on the foundation.

6.5* Connection to Driver and Alignment.

6.5.1 Coupling Type.

6.5.1.1 Separately coupled–type pumps with electric motor drivers shall be connected by a flexible coupling or flexible connecting shaft.

6.5.1.2 All coupling types shall be listed for the service referenced in 6.5.1.1.

6.5.2 Pumps and drivers on separately coupled–type pumps shall be aligned in accordance with the coupling and pump manufacturers' specifications and the *Hydraulics Institute Standards for Centrifugal, Rotary and Reciprocating Pumps. (See A.6.5.)*

Chapter 7 Vertical Shaft Turbine–Type Pumps

7.1* General.

7.1.1* Suitability. Where the water supply is located below the discharge flange centerline and the water supply pressure is insufficient for getting the water to the fire pump, a vertical shaft turbine–type pump shall be used.

7.1.2 Characteristics.

7.1.2.1 Pumps shall furnish not less than 150 percent of rated capacity at a total head of not less than 65 percent of the total rated head.

Copyright National Fire Protection Association
Provided by IHS under license with NFPA
No reproduction or networking permitted without license from IHS
Not for Resale

7.1.2.2 The total shutoff head shall not exceed 140 percent of the total rated head on vertical turbine pumps. *(See Figure A.6.2.)*

7.2 Water Supply.

7.2.1 Source.

7.2.1.1* The water supply shall be adequate, dependable, and acceptable to the authority having jurisdiction.

7.2.1.2* The acceptance of a well as a water supply source shall be dependent upon satisfactory development of the well and establishment of satisfactory aquifer characteristics.

7.2.2 Pump Submergence.

7.2.2.1* Well Installations.

7.2.2.1.1 Proper submergence of the pump bowls shall be provided for reliable operation of the fire pump unit. Submergence of the second impeller from the bottom of the pump bowl assembly shall be not less than 10 ft (3.2 m) below the pumping water level at 150 percent of rated capacity. *(See Figure A.7.2.2.1.)*

7.2.2.1.2 The submergence shall be increased by 1 ft (0.3 m) for each 1000 ft (305 m) of elevation above sea level.

7.2.2.2* Wet Pit Installations.

7.2.2.2.1 To provide submergence for priming, the elevation of the second impeller from the bottom of the pump bowl assembly shall be such that it is below the lowest pumping water level in the open body of water supplying the pit.

7.2.2.2.2 For pumps with rated capacities of 2000 gpm (7570 L/min) or greater, additional submergence is required to prevent the formation of vortices and to provide required net positive suction head (NPSH) in order to prevent excessive cavitation.

7.2.2.2.3 The required submergence shall be obtained from the pump manufacturer.

7.2.2.2.4 The distance between the bottom of the strainer and the bottom of the wet pit shall be at least one-half of the pump bowl diameter but not less than 12 in. (305 mm).

7.2.3 Well Construction.

7.2.3.1 It shall be the responsibility of the groundwater supply contractor to perform the necessary groundwater investigation to establish the reliability of the supply, to develop a well to produce the required supply, and to perform all work and install all equipment in a thorough and workmanlike manner.

7.2.3.2 The vertical turbine–type pump is designed to operate in a vertical position with all parts in correct alignment.

7.2.3.3 To support the requirements of 7.2.3.1, the well shall be of ample diameter and sufficiently plumb to receive the pump.

7.2.4 Unconsolidated Formations (Sands and Gravels).

7.2.4.1 All casings shall be of steel of such diameter and installed to such depths as the formation could justify and as best meet the conditions.

7.2.4.2 Both inner and outer casings shall have a minimum wall thickness of 0.375 in. (9.5 mm).

7.2.4.3 Inner casing diameter shall be not less than 2 in. (51 mm) larger than the pump bowls.

7.2.4.4 The outer casing shall extend down to approximately the top of the water-bearing formation.

7.2.4.5 The inner casing of lesser diameter and the well screen shall extend as far into the formation as the water-bearing stratum could justify and as best meets the conditions.

7.2.4.6 The well screen is a vital part of the construction, and careful attention shall be given to its selection.

7.2.4.7 The well screen shall be the same diameter as the inner casing and of the proper length and percent open area to provide an entrance velocity not exceeding 0.15 ft/sec (46 mm/sec).

7.2.4.8 The screen shall be made of a corrosion- and acid-resistant material, such as stainless steel or Monel.

7.2.4.9 Monel shall be used where it is anticipated that the chloride content of the well water will exceed 1000 parts per million.

7.2.4.10 The screen shall have adequate strength to resist the external forces that will be applied after it is installed and to minimize the likelihood of damage during the installation.

7.2.4.11 The bottom of the well screen shall be sealed properly with a plate of the same material as the screen.

7.2.4.12 The sides of the outer casing shall be sealed by the introduction of neat cement placed under pressure from the bottom to the top.

7.2.4.13 Cement shall be allowed to set for a minimum of 48 hours before drilling operations are continued.

7.2.4.14 The immediate area surrounding the well screen not less than 6 in. (152 mm) shall be filled with clean and well-rounded gravel.

7.2.4.15 This gravel shall be of such size and quality as will create a gravel filter to ensure sand-free production and a low velocity of water leaving the formation and entering the well.

7.2.4.16 Tubular Wells.

7.2.4.16.1 Wells for fire pumps not exceeding 450 gpm (1703 L/min) developed in unconsolidated formations without an artificial gravel pack, such as tubular wells, shall be acceptable sources of water supply for fire pumps not exceeding 450 gpm (1703 L/min).

7.2.4.16.2 Tubular wells shall comply with all the requirements of 7.2.3 and 7.2.4, except compliance with 7.2.4.11 through 7.2.4.15 shall not be required.

7.2.5* Consolidated Formations. Where the drilling penetrates unconsolidated formations above the rock, surface casing shall be installed, seated in solid rock, and cemented in place.

7.2.6 Developing a Well.

7.2.6.1 Developing a new well and cleaning it of sand or rock particles (not to exceed 5 ppm) shall be the responsibility of the groundwater supply contractor.

7.2.6.2 Such development shall be performed with a test pump and not a fire pump.

Copyright National Fire Protection Association
Provided by IHS under license with NFPA
No reproduction or networking permitted without license from IHS
Not for Resale

7.2.6.3 Freedom from sand shall be determined when the test pump is operated at 150 percent of rated capacity of the fire pump for which the well is being prepared.

7.2.7* Test and Inspection of Well.

7.2.7.1 A test to determine the water production of the well shall be made.

7.2.7.2 An acceptable water measuring device such as an orifice, a venturi meter, or a calibrated pitot tube shall be used.

7.2.7.3 The test shall be witnessed by a representative of the customer, contractor, and authority having jurisdiction, as required.

7.2.7.4 The test shall be continuous for a period of at least 8 hours at 150 percent of the rated capacity of the fire pump with 15-minute interval readings over the period of the test.

7.2.7.5 The test shall be evaluated with consideration given to the effect of other wells in the vicinity and any possible seasonal variation in the water table at the well site.

7.2.7.6 Test data shall describe the static water level and the pumping water level at 100 percent and 150 percent, respectively, of the rated capacity of the fire pump for which the well is being prepared.

7.2.7.7 All existing wells within a 1000 ft (305 m) radius of the fire well shall be monitored throughout the test period.

7.3 Pump.

7.3.1* Vertical Turbine Pump Head Component.

7.3.1.1 The pump head shall be either the aboveground or belowground discharge type.

7.3.1.2 The pump head shall be designed to support the driver, pump, column assembly, bowl assembly, maximum down thrust, and the oil tube tension nut or packing container.

7.3.2 Column.

7.3.2.1* The pump column shall be furnished in sections not exceeding a nominal length of 10 ft (3 m), shall be not less than the weight specified in Table 7.3.2.1(a) and Table 7.3.2.1(b), and shall be connected by threaded-sleeve couplings or flanges.

7.3.2.2 The ends of each section of threaded pipe shall be faced parallel and machined with threads to permit the ends to butt so as to form accurate alignment of the pump column.

Table 7.3.2.1(a) Pump Column Pipe Weights (U.S. Customary)

Nominal Size (in.)	Outside Diameter (O.D.) (in.)	Weight per Unit Length (Plain Ends) (lb/ft)
6	6.625	18.97
7	7.625	22.26
8	8.625	24.70
9	9.625	28.33
10	10.75	31.20
12	12.75	43.77
14	14.00	53.57

Table 7.3.2.1(b) Pump Column Pipe Weights (Metric)

Nominal Size (mm)	Outside Diameter (O.D.) (mm)	Weight per Unit Length (Plain Ends) (kg/m)
150	161	28.230
200	212	36.758
250	264	46.431
300	315	65.137
350	360	81.209

7.3.2.3 All column flange faces shall be parallel and machined for rabbet fit to permit accurate alignment.

7.3.2.4 Where the static water level exceeds 50 ft (15.3 m) below ground, oil-lubricated-type pumps shall be used. *(See Figure A.7.1.1.)*

7.3.2.5 Where the pump is of the enclosed line shaft oil-lubricated type, the shaft-enclosing tube shall be furnished in interchangeable sections not over 10 ft (3 m) in length of extra-strong pipe.

7.3.2.6 An automatic sight feed oiler shall be provided on a suitable mounting bracket with connection to the shaft tube for oil-lubricated pumps. *(See Figure A.7.1.1.)*

7.3.2.7 The pump line shafting shall be sized so critical speed shall be 25 percent above and below the operating speed of the pump.

7.3.2.8 Operating speed shall include all speeds from shutoff to the 150 percent point of the pump, which vary on engine drives.

7.3.2.9 Operating speed for variable speed pressure limiting control drive systems shall include all speeds from rated to minimum operating speed.

7.3.3 Bowl Assembly.

7.3.3.1 The pump bowl shall be of close-grained cast iron, bronze, or other suitable material in accordance with the chemical analysis of the water and experience in the area.

7.3.3.2 Impellers shall be of the enclosed type and shall be of bronze or other suitable material in accordance with the chemical analysis of the water and experience in the area.

7.3.4 Suction Strainer.

7.3.4.1 A cast or heavy fabricated, corrosion-resistant metal cone or basket-type strainer shall be attached to the suction manifold of the pump.

7.3.4.2 The suction strainer shall have a free area of at least four times the area of the suction connections, and the openings shall be sized to restrict the passage of a 0.5 in. (12.7 mm) sphere.

7.3.4.3 For installations in a wet pit, this suction strainer shall be required in addition to the intake screen. *(See Figure A.7.2.2.2.)*

7.3.5 Fittings.

7.3.5.1 The following fittings shall be required for attachment to the pump:

(1) Automatic air release valve as specified in 7.3.5.2

Copyright National Fire Protection Association
Provided by IHS under license with NFPA
No reproduction or networking permitted without license from IHS
Not for Resale

(2) Water level detector as specified in 7.3.5.3
(3) Discharge pressure gauge as specified in 5.10.1
(4) Relief valve and discharge cone where required by 5.18.1
(5) Hose valve header and hose valves as specified in 5.19.3 or metering devices as specified in 5.19.2

7.3.5.2 Automatic Air Release.

7.3.5.2.1 A nominal 1.5 in. (38 mm) pipe size or larger automatic air release valve shall be provided to vent air from the column and the discharge head upon the starting of the pump.

7.3.5.2.2 This valve shall also admit air to the column to dissipate the vacuum upon stopping of the pump.

7.3.5.2.3 This valve shall be located at the highest point in the discharge line between the fire pump and the discharge check valve.

7.3.5.3* Water Level Detector.

7.3.5.3.1 Each well installation shall be equipped with a suitable water level detector.

7.3.5.3.2 If an air line is used, it shall be brass, copper, or series 300 stainless steel.

7.3.5.3.3 Air lines shall be strapped to column pipe at 10 ft (3 m) intervals.

7.4* Installation.

7.4.1 Pump House.

7.4.1.1 The pump house shall be of such design as will offer the least obstruction to the convenient handling and hoisting of vertical pump parts.

7.4.1.2 The requirements of Sections 5.12 and 11.3 shall also apply.

7.4.2 Outdoor Setting.

7.4.2.1 If in special cases the authority having jurisdiction does not require a pump room and the unit is installed outdoors, the driver shall be screened or enclosed and adequately protected against tampering.

7.4.2.2 The screen or enclosure required in 7.4.2.1 shall be easily removable and shall have provision for ample ventilation.

7.4.3 Foundation.

7.4.3.1 Certified dimension prints shall be obtained from the manufacturer.

7.4.3.2 The foundation for vertical pumps shall be substantially built to carry the entire weight of the pump and driver plus the weight of the water contained in it.

7.4.3.3 Foundation bolts shall be provided to firmly anchor the pump to the foundation.

7.4.3.4 The foundation shall be of sufficient area and strength that the load per square inch (square millimeter) on concrete does not exceed design standards.

7.4.3.5 The top of the foundation shall be carefully leveled to permit the pump to hang freely over a well pit on a short-coupled pump.

7.4.3.6 On a well pump the pump head shall be positioned plumb over the well, which is not necessarily level.

7.4.3.7 Sump or Pit.

7.4.3.7.1 Where the pump is mounted over a sump or pit, I-beams shall be permitted to be used.

7.4.3.7.2 Where a right-angle gear is used, the driver shall be installed parallel to the beams.

7.5 Driver.

7.5.1 Method of Drive.

7.5.1.1 The driver provided shall be so constructed that the total thrust of the pump, which includes the weight of the shaft, impellers, and hydraulic thrust, can be carried on a thrust bearing of ample capacity so that it will have an average life rating of 5 years continuous operation.

7.5.1.2 All drivers shall be so constructed that axial adjustment of impellers can be made to permit proper installation and operation of the equipment.

7.5.1.3 Unless the requirements of 7.5.1.4 are met, the pump shall be driven by a vertical hollow-shaft electric motor or vertical hollow-shaft right-angle gear drive with diesel engine or steam turbine.

7.5.1.4 The requirements of 7.5.1.3 shall not apply to diesel engines and steam turbines designed and listed for vertical installation with vertical shaft turbine–type pumps, which shall be permitted to employ solid shafts and shall not require a right-angle gear drive but shall require a nonreverse ratchet.

7.5.1.5 Motors shall be of the vertical hollow-shaft type and comply with 9.5.1.8.

7.5.1.6 Mass Elastic System.

7.5.1.6.1 Unless the requirements of 7.5.1.4 are met, the pump manufacturer shall provide a complete mass elastic system torsional analysis to ensure there are no damaging stresses and/or critical speeds within 25 percent above and below the operating speed of the pump and drive.

7.5.1.6.2 The torsional analysis specified in 7.5.1.6.1 shall include the mass elastic characteristics for a wetted pump with the specific impeller trim, coupling, right-angle gear, flexible connecting shaft, and engine, plus the excitation characteristics of the engine.

7.5.1.7 Gear Drives.

7.5.1.7.1 Gear drives and flexible connecting shafts shall be acceptable to the authority having jurisdiction.

7.5.1.7.2 Gear drives shall be of the vertical hollow-shaft type, permitting adjustment of the impellers for proper installation and operation of the equipment.

7.5.1.7.3 The gear drive shall be equipped with a nonreverse ratchet.

7.5.1.7.4 All gear drives shall be listed and rated by the manufacturer at a load equal to the maximum horsepower and thrust of the pump for which the gear drive is intended.

7.5.1.7.5 Water-cooled gear drives shall be equipped with a visual means to determine whether water circulation is occurring.

7.5.1.8 Flexible Connecting Shafts.

7.5.1.8.1 The flexible connecting shaft shall be listed for this service.

Copyright National Fire Protection Association
Provided by IHS under license with NFPA
No reproduction or networking permitted without license from IHS
Not for Resale

7.5.1.8.2 The operating angle for the flexible connecting shaft shall not exceed the limits specified by the manufacturer for the speed and horsepower transmitted.

7.5.2 Controls. The controllers for the motor, diesel engine, or steam turbine shall comply with specifications for either electric-drive controllers in Chapter 10 or engine drive controllers in Chapter 12.

7.6 Operation and Maintenance.

7.6.1 Operation.

7.6.1.1* Before the unit is started for the first time after installation, all field-installed electrical connections and discharge piping from the pump shall be checked.

7.6.1.2 With the top drive coupling removed, the drive shaft shall be centered in the top drive coupling for proper alignment and the motor shall be operated momentarily to ensure that it rotates in the proper direction.

7.6.1.3 With the top drive coupling reinstalled, the impellers shall be set for proper clearance according to the manufacturer's instructions.

7.6.1.4* With the precautions of 7.6.1.1 through 7.6.1.3 taken, the pump shall be started and allowed to run.

7.6.1.5 The operation shall be observed for vibration while running, with vibration limits according to the *Hydraulics Institute Standards for Centrifugal, Rotary and Reciprocating Pumps*.

7.6.1.6 The driver shall be observed for proper operation.

7.6.2 Maintenance.

7.6.2.1 The manufacturer's instructions shall be carefully followed in making repairs and dismantling and reassembling pumps.

7.6.2.2 When spare or replacement parts are ordered, the pump serial number stamped on the nameplate fastened to the pump head shall be included in order to make sure the proper parts are provided.

7.6.2.3 Ample head room and access for removal of the pump shall be maintained.

Chapter 8 Positive Displacement Pumps

8.1* General.

8.1.1 Types. Positive displacement pumps shall be as defined in 3.3.37.12.

8.1.2* Suitability.

8.1.2.1 The positive displacement–type pump shall be listed for the intended application.

8.1.2.2* The listing shall verify the characteristic performance curves for a given pump model.

8.1.3 Application.

8.1.3.1 Positive displacement pumps shall be permitted to pump liquids for fire protection applications.

8.1.3.2 The selected pump shall be appropriate for the viscosity of the liquid.

8.1.4 Pump Seals.

8.1.4.1 The seal type acceptable for positive displacement pumps shall be either mechanical or lip seal.

8.1.4.2 Packing shall not be used.

8.1.5* Pump Materials. Materials used in pump construction shall be selected based on the corrosion potential of the environment, fluids used, and operational conditions. *(See 3.3.9 for corrosion-resistant materials.)*

8.1.6 Dump Valve.

8.1.6.1 A dump valve shall be provided on all closed head systems to allow the positive displacement pump to bleed off excess pressure and achieve operating speed before subjecting the driver to full load.

8.1.6.2 The dump valve shall operate only for the duration necessary for the positive displacement pump to achieve operating speed.

8.1.6.3 Dump Valve Control.

8.1.6.3.1 Automatic Operation. When an electrically operated dump valve is used, it shall be controlled by the positive displacement pump controller.

8.1.6.3.2 Manual Operation. Means shall be provided at the controller to ensure dump valve operation during manual start.

8.1.6.4 Dump valves shall be listed.

8.1.6.5 Dump valve discharge shall be permitted to be piped to the liquid supply tank, pump suction, drain, or liquid supply.

8.2 Foam Concentrate and Additive Pumps.

8.2.1 Additive Pumps. Additive pumps shall meet the requirements for foam concentrate pumps.

8.2.2* Net Positive Suction Head. Net positive suction head (NPSH) shall exceed the pump manufacturer's required NPSH plus 5 ft (1.52 m) of liquid.

8.2.3 Seal Materials. Seal materials shall be compatible with the foam concentrate or additive.

8.2.4* Dry Run. Foam concentrate pumps shall be capable of dry running for 10 minutes without damage.

8.2.5* Minimum Flow Rates. Pumps shall have foam concentrate flow rates to meet the maximum foam flow demand for their intended service.

8.2.6* Discharge Pressure. The discharge pressure of the pump shall exceed the maximum water pressure under any operating condition at the point of foam concentrate injection.

8.3 Water Mist System Pumps.

8.3.1* Positive displacement pumps for water shall have adequate capacities to meet the maximum system demand for their intended service.

8.3.2 NPSH shall exceed the pump manufacturer's required NPSH plus 5 ft (1.52 m) of liquid.

8.3.3 The inlet pressure to the pump shall not exceed the pump manufacturer's recommended maximum inlet pressure.

Copyright National Fire Protection Association
Provided by IHS under license with NFPA
No reproduction or networking permitted without license from IHS
Not for Resale

8.3.4 When the pump output has the potential to exceed the system flow requirements, a means to relieve the excess flow such as an unloader valve or orifice shall be provided.

8.3.5 Where the pump is equipped with an unloader valve, it shall be in addition to the safety relief valve as outlined in 8.4.2.

8.4 Fittings.

8.4.1 Gauges. A compound suction gauge and a discharge pressure gauge shall be furnished.

8.4.2* General Information for Relief Valves.

8.4.2.1 All pumps shall be equipped with a listed safety relief valve capable of relieving 100 percent of the pump capacity.

8.4.2.2 The pressure relief valve shall be set at or below the lowest rated pressure of any component.

8.4.2.3 The relief valve shall be installed on the pump discharge to prevent damage to the fire protection system.

8.4.3* Relief Valves for Foam Concentrate Pumps. For foam concentrate pumps, safety relief valves shall be piped to return the valve discharge to the concentrate supply tank.

8.4.4* Relief Valves for Water Mist Pumps.

8.4.4.1 For positive displacement water mist pumps, safety relief valves shall discharge to a drain or to the water supply or pump suction.

8.4.4.2 A means of preventing overheating shall be provided when the relief valve is plumbed to discharge to the pump suction.

8.4.5* Suction Strainer.

8.4.5.1 Pumps shall be equipped with a removable and cleanable suction strainer installed at least 10 pipe diameters from the pump suction inlet.

8.4.5.2 Suction strainer pressure drop shall be calculated to ensure that sufficient NPSH is available to the pump.

8.4.5.3 The net open area of the strainer shall be at least four times the area of the suction piping.

8.4.5.4 Strainer mesh size shall be in accordance with the pump manufacturer's recommendation.

8.4.6 Water Supply Protection. Design of the system shall include protection of potable water supplies and prevention of cross connection or contamination.

8.5 Pump Drivers.

8.5.1* The driver shall be sized for and have enough power to operate the pump and drive train at all design points.

8.5.2 Reduction Gears.

8.5.2.1 If a reduction gear is provided between the driver and the pump, it shall be listed for the intended use. Reduction gears shall meet the requirements of AGMA 390.03, *Handbook for Helical and Master Gears.*

8.5.2.2 Gears shall be AGMA Class 7 or better, and pinions shall be AGMA Class 8 or better.

8.5.2.3 Bearings shall be in accordance with AGMA standards and applied for an L10 life of 15,000 hours.

8.5.3 Common Drivers.

8.5.3.1 A single driver shall be permitted to drive more than one positive displacement pump.

8.5.3.2 Redundant pump systems shall not be permitted to share a common driver.

8.6* Controllers. See Chapters 10 and 12 for requirements for controllers.

8.7 Foundation and Setting.

8.7.1 The pump and driver shall be mounted on a common grouted base plate.

8.7.2 The base plate shall be securely attached to a solid foundation in such a way that proper pump and driver shaft alignment will be maintained.

8.7.3 The foundation shall provide a solid support for the base plate.

8.8 Driver Connection and Alignment.

8.8.1 The pump and driver shall be connected by a listed, closed coupled, flexible coupling or timing gear type of belt drive coupling.

8.8.2 The coupling shall be selected to ensure that it is capable of transmitting the horsepower of the driver and does not exceed the manufacturer's maximum recommended horsepower and operating speed.

8.8.3 Pumps and drivers shall be aligned once final base plate placement is complete.

8.8.4 Alignment shall be in accordance with the coupling manufacturer's specifications.

8.8.5 The operating angle for the flexible coupling shall not exceed the recommended tolerances.

8.9 Flow Test Devices.

8.9.1 A positive displacement pump installation shall be arranged to allow the test of the pump at its rated conditions as well as the suction supply at the maximum flow available from the pump.

8.9.2 Additive pumping systems shall be equipped with a flow meter or orifice plate installed in a test loop back to the additive supply tank.

8.9.3 Water pumping systems shall be equipped with a flowmeter or orifice plate installed in a test loop back to the water supply, tank, inlet side of the water pump, or drain.

Chapter 9 Electric Drive for Pumps

9.1 General.

9.1.1 This chapter covers the minimum performance and testing requirements of the sources and transmission of electrical power to motors driving fire pumps.

9.1.2 This chapter also covers the minimum performance requirements of all intermediate equipment between the source(s) and the pump, including the motor(s) but excepting the electric fire pump controller, transfer switch, and accessories *(see Chapter 10).*

Copyright National Fire Protection Association
Provided by IHS under license with NFPA
No reproduction or networking permitted without license from IHS
Not for Resale

9.1.3 All electrical equipment and installation methods shall comply with NFPA 70, *National Electrical Code*, Article 695, and other applicable articles.

9.1.4* All power supplies shall be located and arranged to protect against damage by fire from within the premises and exposing hazards.

9.1.5 All power supplies shall have the capacity to run the fire pump on a continuous basis.

9.1.6 All power supplies shall comply with the voltage drop requirements of Section 9.4.

9.2 Normal Power.

9.2.1 An electric motor driven fire pump shall be provided with a normal source of power as a continually available source.

9.2.2* The normal source of power required in 9.2.1 and its routing shall be arranged in accordance with one of the following:

(1) Service connection dedicated to the fire pump installation
(2) On-site power production facility connection dedicated to the fire pump installation
(3) Dedicated feeder connection derived directly from the dedicated service to the fire pump installation
(4) As a feeder connection where all of the following conditions are met:
    (a) The protected facility is part of a multi-building campus style arrangement.
    (b) A back-up source of power is provided from a source independent of the normal source of power.
    (c) It is impractical to supply the normal source of power through arrangement 9.2.2(1), 9.2.2(2), or 9.2.2(3).
    (d) The arrangement is acceptable to the authority having jurisdiction.
    (e) The overcurrent protection device(s) in each disconnecting means shall be selectively coordinated with any other supply side overcurrent protective device(s).
(5) Dedicated transformer connection directly from the service meeting the requirements of Article 695 of NFPA 70, *National Electrical Code*

9.2.3 For fire pump installations using the arrangement of 9.2.2(1), 9.2.2(2), 9.2.2(3), or 9.2.2(5) for the normal source of power, no more than one disconnecting means and associated overcurrent protection device shall be installed in the power supply to the fire pump controller.

9.2.3.1 Where the disconnecting means permitted by 9.2.3 is installed, the disconnecting means shall meet all of the following:

(1) They shall be identified as being suitable for use as service equipment.
(2) They shall be lockable in the closed position.
(3)* They shall be located remote from other building disconnecting means.
(4)* They shall be located remote from other fire pump source disconnecting means.
(5) They shall be marked "Fire Pump Disconnecting Means" in letters that are no less than 1 in. (25 mm) in height and that can be seen without opening enclosure doors or covers.

9.2.3.2 Where the disconnecting means permitted by 9.2.3 is installed, a placard shall be placed adjacent to the fire pump controller stating the location of this disconnection means and the location of any key needed to unlock the disconnect.

9.2.3.3 Where the disconnecting means permitted by 9.2.3 is installed, the disconnect shall be supervised in the closed position by one of the following methods:

(1) Central station, proprietary, or remote station signal device
(2) Local signaling service that will cause the sounding of an audible signal at a constantly attended location
(3) Locking the disconnecting means in the closed position
(4) Sealing of disconnecting means and approved weekly recorded inspections where the disconnecting means are located within fenced enclosures or in buildings under the control of the owner

9.2.3.4 Where the overcurrent protection permitted by 9.2.3 is installed, the overcurrent protection device shall be selected or set to carry indefinitely the sum of the locked-rotor current of the fire pump motor(s) and the pressure maintenance pump motor(s) and the full-load current of the associated fire pump accessory equipment.

9.3 Alternate Power.

9.3.1 Except for an arrangement described in 9.3.6, at least one alternate source of power shall be provided when the height of the structure is beyond the pumping capacity of the fire department apparatus.

9.3.2* Other Sources. Except for an arrangement described in 9.3.3, at least one alternate source of power shall be provided where the normal source is not reliable.

9.3.3 An alternate source of power is not required where a back-up engine driven or back-up steam turbine driven fire pump is installed in accordance with this standard.

9.3.4 When provided, the alternate source of power shall be supplied from one of the following sources:

(1) A generator installed in accordance with Section 9.6
(2) One of the sources identified in 9.2.2(1), 9.2.2(2), 9.2.2(3), or 9.2.2(5) when the power is provided independent of the normal source of power

9.3.5 When provided, the alternate supply shall be arranged so that the power to the fire pump is not disrupted when overhead lines are de-energized for fire department operations.

9.3.6 Junction Boxes. Where fire pump wiring to or from a fire pump controller is routed through a junction box, the following requirements shall be met:

(1) The junction box shall be securely mounted.
(2)* Mounting and installing of a junction box shall not violate the enclosure type rating of the fire pump controller(s).
(3)* Mounting and installing of a junction box shall not violate the integrity of the fire pump controller(s) and shall not affect the short circuit rating of the controller(s).
(4) As a minimum, a Type 2, dripproof enclosure (junction box) shall be used. The enclosure shall be listed to match the fire pump controller enclosure type rating.
(5) Terminals, junction blocks, and splices, when used, shall be listed.

9.3.7 Listed Electrical Circuit Protective System to Controller Wiring.

9.3.7.1* Where single conductors (individual conductors) are used, they shall be terminated in a separate junction box. Single conductors (individual conductors) shall not enter the fire pump enclosure separately.

Copyright National Fire Protection Association
Provided by IHS under license with NFPA
No reproduction or networking permitted without license from IHS
Not for Resale

9.3.7.2* Where required by the manufacturer of a listed electrical circuit protective system or by NFPA 70, *National Electrical Code*, or by the listing, the raceway between a junction box and the fire pump controller shall be sealed at the junction box end as required and in accordance with the instructions of the manufacturer.

9.3.7.3 Standard wiring between the junction box and the controller is acceptable.

9.3.8 Raceway Terminations.

9.3.8.1 Listed conduit hubs shall be used to terminate raceway (conduit) to the fire pump controller.

9.3.8.2 The type rating of the conduit hub(s) shall be at least equal to that of the fire pump controller.

9.3.8.3 The installation instructions of the manufacturer of the fire pump controller shall be followed.

9.3.8.4 Alterations to the fire pump controller, other than conduit entry as allowed by NFPA 70, *National Electrical Code*, shall be approved by the authority having jurisdiction.

9.4* Voltage Drop.

9.4.1 Unless the requirements of 9.4.2 are met, the voltage at the controller line terminals shall not drop more than 15 percent below normal (controller-rated voltage) under motor-starting conditions.

9.4.2 The requirements of 9.4.1 shall not apply to emergency-run mechanical starting. *(See 10.5.3.2.)*

9.4.3 The voltage at the motor terminals shall not drop more than 5 percent below the voltage rating of the motor when the motor is operating at 115 percent of the full-load current rating of the motor.

9.5 Motors.

9.5.1 General.

9.5.1.1 All motors shall comply with NEMA MG-1, *Motors and Generators*, shall be marked as complying with NEMA Design B standards, and shall be specifically listed for fire pump service. *(See Table 9.5.1.1.)*

9.5.1.2 The requirements of 9.5.1.1 shall not apply to direct-current, high-voltage (over 600 V), large-horsepower [over 500 hp (373 kW)], single-phase, universal-type, or wound-rotor motors, which shall be permitted to be used where approved.

9.5.1.3 Motors used with variable speed controllers shall additionally meet the applicable requirements of NEMA MG-1, *Motors and Generators*, Part 31 and shall be marked for inverter duty.

9.5.1.4* The corresponding values of locked rotor current for motors rated at other voltages shall be determined by multiplying the values shown by the ratio of 460 V to the rated voltage in Table 9.5.1.1.

9.5.1.5 Code letters of motors for all other voltages shall conform with those shown for 460 V in Table 9.5.1.1.

9.5.1.6 All motors shall be rated for continuous duty.

9.5.1.7 Electric motor–induced transients shall be coordinated with the provisions of 10.4.3.3 to prevent nuisance tripping of motor controller protective devices.

Table 9.5.1.1 Horsepower and Locked Rotor Current Motor Designation for NEMA Design B Motors

Rated Horsepower	Locked Rotor Current Three-Phase 460 V (A)	Motor Designation (NFPA 70, Locked Rotor Indicating Code Letter) "F" to and Including
5	46	J
7½	64	H
10	81	H
15	116	G
20	145	G
25	183	G
30	217	G
40	290	G
50	362	G
60	435	G
75	543	G
100	725	G
125	908	G
150	1085	G
200	1450	G
250	1825	G
300	2200	G
350	2550	G
400	2900	G
450	3250	G
500	3625	G

9.5.1.8 Motors for Vertical Shaft Turbine–Type Pumps.

9.5.1.8.1 Motors for vertical shaft turbine–type pumps shall be dripproof, squirrel-cage induction type.

9.5.1.8.2 The motor shall be equipped with a nonreverse ratchet.

9.5.2 Current Limits.

9.5.2.1 The motor capacity in horsepower shall be such that the maximum motor current in any phase under any condition of pump load and voltage unbalance shall not exceed the motor-rated full-load current multiplied by the service factor.

9.5.2.2 The following shall apply to the service factor:

(1) The maximum service factor at which a motor shall be used is 1.15.
(2) Where the motor is used with a variable speed pressure limiting controller, the service factor shall not be used.

9.5.2.3 These service factors shall be in accordance with NEMA MG-1, *Motors and Generators*.

9.5.2.4 General-purpose (open and dripproof) motors, totally enclosed fan-cooled (TEFC) motors, and totally enclosed nonventilated (TENV) motors shall not have a service factor larger than 1.15.

9.5.2.5 Motors used at altitudes above 3300 ft (1000 m) shall be operated or derated according to NEMA MG-1, *Motors and Generators*, Part 14.

Copyright National Fire Protection Association
Provided by IHS under license with NFPA
No reproduction or networking permitted without license from IHS
Not for Resale

9.5.3 Marking.

9.5.3.1 Marking of motor terminals shall be in accordance with NEMA MG-1, *Motors and Generators*, Part 2.

9.5.3.2 A motor terminal connecting diagram for multiple lead motors shall be furnished by the motor manufacturer.

9.6 On-Site Standby Generator Systems.

9.6.1 Capacity.

9.6.1.1 Where on-site generator systems are used to supply power to fire pump motors to meet the requirements of 9.3.2, they shall be of sufficient capacity to allow normal starting and running of the motor(s) driving the fire pump(s) while supplying all other simultaneously operated load(s) while meeting the requirements of Section 9.4.

9.6.1.2 A tap ahead of the on-site generator disconnecting means shall not be required.

9.6.2* Power Sources.

9.6.2.1 On-site standby generator systems shall comply with Section 6.4 and shall meet the requirements of Level 1, Type 10, Class X systems of NFPA 110, *Standard for Emergency and Standby Power Systems*.

9.6.2.2 The fuel supply capacity shall be sufficient to provide 8 hours of fire pump operation at 100 percent of the rated pump capacity in addition to the supply required for other demands.

9.6.3 Sequencing. Automatic sequencing of the fire pumps shall be permitted in accordance with 10.5.2.5.

9.6.4 Transfer of Power. Transfer of power to the fire pump controller between the normal supply and one alternate supply shall take place within the pump room.

9.6.5* Protective Devices. Where protective devices are installed in the on-site power source circuits at the generator, such devices shall allow instantaneous pickup of the full pump room load.

Chapter 10 Electric-Drive Controllers and Accessories

10.1 General.

10.1.1 Application.

10.1.1.1 This chapter covers the minimum performance and testing requirements for controllers and transfer switches for electric motors driving fire pumps.

10.1.1.2 Accessory devices, including fire pump alarm and signaling means, are included where necessary to ensure the minimum performance of the equipment mentioned in 10.1.1.1.

10.1.2 Performance and Testing.

10.1.2.1 Listing. All controllers and transfer switches shall be specifically listed for electric motor–driven fire pump service.

10.1.2.2* Marking.

10.1.2.2.1 The controller and transfer switch shall be suitable for the available short-circuit current at the line terminals of the controller and transfer switch.

10.1.2.2.2 The controller and transfer switch shall be marked "Suitable for use on a circuit capable of delivering not more than ____ amperes RMS symmetrical at ____ volts ac," or "____ amperes RMS symmetrical at ___ volts ac short-circuit current rating," or equivalent, where the blank spaces shown shall have appropriate values filled in for each installation.

10.1.2.3 Preshipment. All controllers shall be completely assembled, wired, and tested by the manufacturer before shipment from the factory.

10.1.2.4 Service Equipment Listing. All controllers and transfer switches shall be listed as "suitable for use as service equipment" where so used.

10.1.2.5 Additional Marking.

10.1.2.5.1 All controllers shall be marked "Electric Fire Pump Controller" and shall show plainly the name of the manufacturer, identifying designation, maximum operating pressure, enclosure type designation, and complete electrical rating.

10.1.2.5.2 Where multiple pumps serve different areas or portions of the facility, an appropriate sign shall be conspicuously attached to each controller indicating the area, zone, or portion of the system served by that pump or pump controller.

10.1.2.6 Service Arrangements. It shall be the responsibility of the pump manufacturer or its designated representative to make necessary arrangements for the services of a manufacturer's representative when needed for service and adjustment of the equipment during the installation, testing, and warranty periods.

10.1.2.7 State of Readiness. The controller shall be in a fully functional state within 10 seconds upon application of ac power.

10.1.3* Design. All electrical control equipment design shall comply with NFPA 70, *National Electrical Code*, Article 695, and other applicable documents.

10.2 Location.

10.2.1* Controllers shall be located as close as is practical to the motors they control and shall be within sight of the motors.

10.2.2 Controllers shall be located or protected so that they will not be injured by water escaping from pumps or pump connections.

10.2.3 Current-carrying parts of controllers shall be not less than 12 in. (305 mm) above the floor level.

10.2.4 Working clearances around controllers shall comply with NFPA 70, *National Electrical Code*, Article 110.

10.3 Construction.

10.3.1 Equipment. All equipment shall be suitable for use in locations subject to a moderate degree of moisture, such as a damp basement.

10.3.2 Mounting. All equipment shall be mounted in a substantial manner on a single noncombustible supporting structure.

10.3.3 Enclosures.

10.3.3.1* The structure or panel shall be securely mounted in, as a minimum, a National Electrical Manufacturers Association (NEMA) Type 2, dripproof enclosure(s).

Copyright National Fire Protection Association
Provided by IHS under license with NFPA
No reproduction or networking permitted without license from IHS
Not for Resale

10.3.3.2 Where the equipment is located outside, or where special environments exist, suitably rated enclosures shall be used.

10.3.3.3 The enclosure(s) shall be grounded in accordance with NFPA 70, *National Electrical Code*, Article 250.

10.3.4 Connections and Wiring.

10.3.4.1 All busbars and connections shall be readily accessible for maintenance work after installation of the controller.

10.3.4.2 All busbars and connections shall be arranged so that disconnection of the external circuit conductors will not be required.

10.3.4.3 Provisions shall be made within the controller to permit the use of test instruments for measuring all line voltages and currents without disconnecting any conductors within the controller.

10.3.4.4 Means shall be provided on the exterior of the controller to read all line currents and all line voltages with an accuracy within ±5 percent of motor nameplate voltage and current.

10.3.4.5 Continuous-Duty Basis.

10.3.4.5.1 Unless the requirements of 10.3.4.5.2 are met, busbars and other wiring elements of the controller shall be designed on a continuous-duty basis.

10.3.4.5.2 The requirements of 10.3.4.5.1 shall not apply to conductors that are in a circuit only during the motor starting period, which shall be permitted to be designed accordingly.

10.3.4.6 Field Connections.

10.3.4.6.1 A fire pump controller shall not be used as a junction box to supply other equipment.

10.3.4.6.2 No undervoltage, phase loss, frequency sensitive, or other sensor(s) shall be installed that automatically or manually prohibit electrical actuation of the motor contactor.

10.3.4.7 A fire pump controller shall not be used as a junction box to supply other equipment.

10.3.4.8 Electrical supply conductors for pressure maintenance (jockey or make-up) pump(s) shall not be connected to the fire pump controller.

10.3.5 Protection of Control Circuits.

10.3.5.1 Circuits that are necessary for proper operation of the controller shall not have overcurrent protective devices connected in them.

10.3.5.2 The secondary of the transformer and control circuitry shall be permitted to be ungrounded.

10.3.6* External Operation. All switching equipment for manual use in connecting or disconnecting or starting or stopping the motor shall be externally operable.

10.3.7 Electrical Diagrams and Instructions.

10.3.7.1 An electrical schematic diagram shall be provided and permanently attached to the inside of the controller enclosure.

10.3.7.2 All the field wiring terminals shall be plainly marked to correspond with the field connection diagram furnished.

10.3.7.3* Complete instructions covering the operation of the controller shall be provided and conspicuously mounted on the controller.

10.3.8 Marking.

10.3.8.1 Each motor control device and each switch and circuit breaker shall be marked to plainly indicate the name of the manufacturer, the designated identifying number, and the electrical rating in volts, horsepower, amperes, frequency, phases, and so forth, as appropriate.

10.3.8.2 The markings shall be so located as to be visible after installation.

10.4 Components.

10.4.1* Voltage Surge Arrester.

10.4.1.1 Unless the requirements of 10.4.1.3 or 10.4.1.4 are met, a voltage surge arrester complying with ANSI/IEEE C62.1, *IEEE Standard for Gapped Silicon-Carbide Surge Arresters for AC Power Circuits*, or C62.11, *IEEE Standard for Metal-Oxide Surge Arresters for Alternating Current Power Circuits (>1 kV)*, shall be installed from each phase to ground. *(See 10.3.2.)*

10.4.1.2 The surge arrester shall be rated to suppress voltage surges above line voltage.

10.4.1.3 The requirements of 10.4.1.1 and 10.4.1.2 shall not apply to controllers rated in excess of 600 V. *(See Section 10.6.)*

10.4.1.4 The requirements of 10.4.1.1 and 10.4.1.2 shall not apply where the controller can withstand without damage a 10 kV impulse in accordance with ANSI/IEEE C62.41, *IEEE Recommended Practice for Surge Voltages in Low-Voltage AC Power Circuits.*

10.4.2 Isolating Switch.

10.4.2.1 General.

10.4.2.1.1 The isolating switch shall be a manually operable motor circuit switch or a molded case switch having a horsepower rating equal to or greater than the motor horsepower.

10.4.2.1.2* A molded case switch having an ampere rating not less than 115 percent of the motor rated full-load current and also suitable for interrupting the motor locked rotor current shall be permitted.

10.4.2.1.3 A molded case isolating switch shall be permitted to have self-protecting instantaneous short-circuit overcurrent protection, provided that this switch does not trip unless the circuit breaker in the same controller trips.

10.4.2.2 Externally Operable. The isolating switch shall be externally operable.

10.4.2.3* Ampere Rating. The ampere rating of the isolating switch shall be at least 115 percent of the full-load current rating of the motor.

10.4.2.4 Warning.

10.4.2.4.1 Unless the requirements of 10.4.2.4.2 are met, the following warning shall appear on or immediately adjacent to the isolating switch:

WARNING

DO NOT OPEN OR CLOSE THIS SWITCH WHILE THE CIRCUIT BREAKER (DISCONNECTING MEANS) IS IN CLOSED POSITION.

Copyright National Fire Protection Association
Provided by IHS under license with NFPA
No reproduction or networking permitted without license from IHS
Not for Resale

10.4.2.4.2 Instruction Label. The requirements of 10.4.2.4.1 shall not apply where the requirements of 10.4.2.4.2.1 and 10.4.2.4.2.2 are met.

10.4.2.4.2.1 Where the isolating switch and the circuit breaker are so interlocked that the isolating switch can be neither opened nor closed while the circuit breaker is closed, the warning label shall be permitted to be replaced with an instruction label that directs the order of operation.

10.4.2.4.2.2 This label shall be permitted to be part of the label required by 10.3.7.3.

10.4.2.5 Operating Handle.

10.4.2.5.1 Unless the requirements of 10.4.2.5.2 are met, the isolating switch operating handle shall be provided with a spring latch that shall be so arranged that it requires the use of the other hand to hold the latch released in order to permit opening or closing of the switch.

10.4.2.5.2 The requirements of 10.4.2.5.1 shall not apply where the isolating switch and the circuit breaker are so interlocked that the isolating switch can be neither opened nor closed while the circuit breaker is closed.

10.4.3 Circuit Breaker (Disconnecting Means).

10.4.3.1* General.

10.4.3.1.1 The motor branch circuit shall be protected by a circuit breaker that shall be connected directly to the load side of the isolating switch and shall have one pole for each ungrounded circuit conductor.

10.4.3.1.2 Where the motor branch circuit is transferred to an alternate source supplied by an on-site generator and is protected by an overcurrent device at the generator *(see 9.6.5)*, the locked rotor overcurrent protection within the fire pump controller shall be permitted to be bypassed when that motor branch circuit is so connected.

10.4.3.2 Mechanical Characteristics. The circuit breaker shall have the following mechanical characteristics:

(1) It shall be externally operable. *(See 10.3.6.)*
(2) It shall trip free of the handle.
(3) A nameplate with the legend "Circuit breaker — disconnecting means" in letters not less than ⅜ in. (10 mm) high shall be located on the outside of the controller enclosure adjacent to the means for operating the circuit breaker.

10.4.3.3* Electrical Characteristics.

10.4.3.3.1 The circuit breaker shall have the following electrical characteristics:

(1) A continuous current rating not less than 115 percent of the rated full-load current of the motor
(2) Overcurrent-sensing elements of the nonthermal type
(3) Instantaneous short-circuit overcurrent protection
(4)*An adequate interrupting rating to provide the suitability rating 10.1.2.2 of the controller
(5) Capability of allowing normal and emergency starting and running of the motor without tripping *(see 10.5.3.2)*
(6) An instantaneous trip setting of not more than 20 times the full-load current

10.4.3.3.2* Current limiters, where integral parts of the circuit breaker, shall be permitted to be used to obtain the required interrupting rating, provided all the following requirements are met:

(1) The breaker shall accept current limiters of only one rating.
(2) The current limiters shall hold 300 percent of full-load motor current for a minimum of 30 minutes.
(3) The current limiters, where installed in the breaker, shall not open at locked rotor current.
(4) A spare set of current limiters of correct rating shall be kept readily available in a compartment or rack within the controller enclosure.

10.4.4 Locked Rotor Overcurrent Protection.

10.4.4.1 The only other overcurrent protective device that shall be required and permitted between the isolating switch and the fire pump motor shall be located within the fire pump controller and shall possess the following characteristics:

(1) For a squirrel-cage or wound-rotor induction motor, the device shall be as follows:
   (a) Of the time-delay type having a tripping time between 8 seconds and 20 seconds at locked rotor current
   (b) Calibrated and set at a minimum of 300 percent of motor full-load current
(2) For a direct-current motor, the device shall be as follows:
   (a) Of the instantaneous type
   (b) Calibrated and set at a minimum of 400 percent of motor full-load current
(3)*There shall be visual means or markings clearly indicated on the device that proper settings have been made.
(4) It shall be possible to reset the device for operation immediately after tripping, with the tripping characteristics thereafter remaining unchanged.
(5) Tripping shall be accomplished by opening the circuit breaker, which shall be of the external manual reset type.

10.4.4.2 Where the motor branch circuit is transferred to an alternate source supplied by an on-site generator whose capacity is 225 percent or less of the capacity of the fire pump motor and is protected by an overcurrent device at the generator *(see 9.6.5)*, the locked rotor overcurrent protection within the fire pump controller shall be permitted to be bypassed when that motor branch circuit is so connected.

10.4.5 Motor Starting Circuitry.

10.4.5.1 Motor Contactor. The motor contactor shall be horsepower rated and shall be of the magnetic type with a contact in each ungrounded conductor.

10.4.5.2 Timed Acceleration.

10.4.5.2.1 For electrical operation of reduced-voltage controllers, timed automatic acceleration of the motor shall be provided.

10.4.5.2.2 The period of motor acceleration shall not exceed 10 seconds.

10.4.5.3 Starting Resistors. Starting resistors shall be designed to permit one 5-second starting operation every 80 seconds for a period of not less than 1 hour.

10.4.5.4 Starting Reactors and Autotransformers.

10.4.5.4.1 Starting reactors and autotransformers shall comply with the requirements of ANSI/UL 508, *Standard for Industrial Control Equipment*, Table 92.1.

Copyright National Fire Protection Association
Provided by IHS under license with NFPA
No reproduction or networking permitted without license from IHS
Not for Resale

10.4.5.4.2 Starting reactors and autotransformers over 200 hp shall be permitted to be designed to Part 3 of ANSI/UL 508, *Standard for Industrial Control Equipment*, Table 92.1, in lieu of Part 4.

10.4.5.5 Soft Start Units.

10.4.5.5.1 Soft start units shall be horsepower rated or specifically designed for the service.

10.4.5.5.2 The bypass contactor shall comply with 10.4.5.1.

10.4.5.5.3 Soft start units shall comply with the duty cycle requirements in accordance with 10.4.5.4.1 and 10.4.5.4.2.

10.4.5.6 Operating Coils. For controllers of 600 V or less, the operating coil(s) for any motor contactor(s), and any bypass contactor(s), if provided, shall be supplied directly from the main power voltage and not through a transformer.

10.4.5.7* Single-Phase Sensors.

10.4.5.7.1 Sensors shall be permitted to prevent a three-phase motor from starting under single-phase condition.

10.4.5.7.2 Such sensors shall not cause disconnection of the motor if it is running at the time of single-phase occurrence.

10.4.5.7.3 Such sensors shall be monitored to provide a local visible signal in the event of malfunction of the sensors.

10.4.6* Signal Devices on Controller.

10.4.6.1 Power Available Visible Indicator.

10.4.6.1.1 A visible indicator shall monitor the availability of power in all phases at the line terminals of the motor contactor, or of the bypass contactor, if provided.

10.4.6.1.2 If the visible indicator is a pilot lamp, it shall be accessible for replacement.

10.4.6.1.3 When power is supplied from multiple power sources, monitoring of each power source for phase loss shall be permitted at any point electrically upstream of the line terminals of the contactor provided all sources are monitored.

10.4.6.2 Phase Reversal.

10.4.6.2.1 Phase reversal of the power source to which the line terminals of the motor contactor are connected shall be indicated by a visible indicator.

10.4.6.2.2 When power is supplied from multiple power sources, monitoring of each power source for phase reversal shall be permitted at any point electrically upstream of the line terminals of the contactor, provided all sources are monitored.

10.4.7* Fire Pump Alarm and Signal Devices Remote from Controller.

10.4.7.1 Where the pump room is not constantly attended, audible or visible signals powered by a source not exceeding 125 V shall be provided at a point of constant attendance.

10.4.7.2 These fire pump alarms and signals shall indicate the information in 10.4.7.2.1 through 10.4.7.2.4.

10.4.7.2.1 Pump or Motor Running. The signal shall actuate whenever the controller has operated into a motor-running condition. This signal circuit shall be energized by a separate reliable supervised power source or from the pump motor power, reduced to not more than 125 V.

10.4.7.2.2 Loss of Phase.

10.4.7.2.2.1 The fire pump alarm shall actuate whenever any phase at the line terminals of the motor contactor is lost.

10.4.7.2.2.2 All phases shall be monitored. Such monitoring shall detect loss of phase whether the motor is running or at rest.

10.4.7.2.2.3 When power is supplied from multiple power sources, monitoring of each power source for phase loss shall be permitted at any point electrically upstream of the line terminals of the contactor, provided all sources are monitored.

10.4.7.2.3 Phase Reversal. *(See 10.4.6.2.)* This fire pump alarm circuit shall be energized by a separate reliable supervised power source or from the pump motor power, reduced to not more than 125 V. The fire pump alarm shall actuate whenever the three-phase power at the line terminals of the motor contactor is reversed.

10.4.7.2.4 Controller Connected to Alternate Source. Where two sources of power are supplied to meet the requirements of 9.3.2, this signal shall indicate whenever the alternate source is the source supplying power to the controller. This signal circuit shall be energized by a separate, reliable, supervised power source, reduced to not more than 125 V.

10.4.8 Controller Contacts for Remote Indication. Controllers shall be equipped with contacts (open or closed) to operate circuits for the conditions in 10.4.7.2.1 through 10.4.7.2.3 and when a controller is equipped with a transfer switch in accordance with 10.4.7.2.4.

10.5 Starting and Control.

10.5.1* Automatic and Nonautomatic.

10.5.1.1 An automatic controller shall be self-acting to start, run, and protect a motor.

10.5.1.2 An automatic controller shall be pressure switch actuated or nonpressure switch actuated.

10.5.1.3 An automatic controller shall be operable also as a nonautomatic controller.

10.5.1.4 A nonautomatic controller shall be actuated by manually initiated electrical means and by manually initiated mechanical means.

10.5.2 Automatic Controller.

10.5.2.1* Water Pressure Control.

10.5.2.1.1 Pressure-Actuated Switches.

10.5.2.1.1.1 Unless the requirements of 10.5.2.1.1.2 are met, there shall be provided a pressure-actuated switch having adjustable high- and low-calibrated set-points as part of the controller.

10.5.2.1.1.2 The requirements of 10.5.2.1.1.1 shall not apply in a nonpressure-actuated controller, where the pressure-actuated switch shall not be required.

10.5.2.1.2 There shall be no pressure snubber or restrictive orifice employed within the pressure switch.

10.5.2.1.3 This switch shall be responsive to water pressure in the fire protection system.

10.5.2.1.4 The pressure-sensing element of the switch shall be capable of withstanding a momentary surge pressure of 400 psi (27.6 bar) or 133 percent of fire pump controller rated operating pressure, whichever is higher, without losing its accuracy.

Copyright National Fire Protection Association
Provided by IHS under license with NFPA
No reproduction or networking permitted without license from IHS
Not for Resale

10.5.2.1.5 Suitable provision shall be made for relieving pressure to the pressure-actuated switch to allow testing of the operation of the controller and the pumping unit. *[See Figure A.10.5.2.1(a) and Figure A.10.5.2.1(b).]*

10.5.2.1.6 Water pressure control shall be in accordance with 10.5.2.1.6.1 through 10.5.2.1.6.5.

10.5.2.1.6.1 Pressure switch actuation at the low adjustment setting shall initiate pump starting sequence (if pump is not already in operation).

10.5.2.1.6.2* A listed pressure recording device shall be installed to sense and record the pressure in each fire pump controller pressure-sensing line at the input to the controller.

10.5.2.1.6.3 The recorder shall be capable of operating for at least 7 days without being reset or rewound.

10.5.2.1.6.4 The pressure-sensing element of the recorder shall be capable of withstanding a momentary surge pressure of at least 400 psi (27.6 bar) or 133 percent of fire pump controller rated operating pressure, whichever is greater, without losing its accuracy.

10.5.2.1.6.5 For variable speed pressure limiting control, a ½ in. (15 mm) nominal size inside diameter pressure line shall be connected between the pump discharge flange and the discharge control valve, as appropriate.

10.5.2.2 Nonpressure Switch–Actuated Automatic Controller.

10.5.2.2.1 Nonpressure switch–actuated automatic fire pump controllers shall commence the controller's starting sequence by the automatic opening of a remote contact(s).

10.5.2.2.2 The pressure switch shall not be required.

10.5.2.2.3 There shall be no means capable of stopping the fire pump motor except those on the fire pump controller.

10.5.2.3 Fire Protection Equipment Control.

10.5.2.3.1 Where the pump supplies special water control equipment (deluge valves, dry pipe valves, etc.), it shall be permitted to start the motor before the pressure-actuated switch(es) would do so.

10.5.2.3.2 Under such conditions the controller shall be equipped to start the motor upon operation of the fire protection equipment.

10.5.2.3.3 Starting of the motor shall be initiated by the opening of the control circuit loop containing this fire protection equipment.

10.5.2.4 Manual Electric Control at Remote Station. Where additional control stations for causing nonautomatic continuous operation of the pumping unit, independent of the pressure-actuated switch, are provided at locations remote from the controller, such stations shall not be operable to stop the motor.

10.5.2.5 Sequence Starting of Pumps.

10.5.2.5.1 The controller for each unit of multiple pump units shall incorporate a sequential timing device to prevent any one driver from starting simultaneously with any other driver.

10.5.2.5.2 Each pump supplying suction pressure to another pump shall be arranged to start before the pump it supplies.

10.5.2.5.3 If water requirements call for more than one pumping unit to operate, the units shall start at intervals of 5 to 10 seconds.

10.5.2.5.4 Failure of a leading driver to start shall not prevent subsequent pumping units from starting.

10.5.2.6 External Circuits Connected to Controllers.

10.5.2.6.1 External control circuits that extend outside the fire pump room shall be arranged so that failure of any external circuit (open, ground-fault, or short circuit) shall not prevent operation of pump(s) from all other internal or external means.

10.5.2.6.2 Breakage, disconnecting, shorting of the wires, ground fault, or loss of power to these circuits shall be permitted to cause continuous running of the fire pump but shall not prevent the controller(s) from starting the fire pump(s) due to causes other than these external circuits.

10.5.2.6.3 All control conductors within the fire pump room that are not fault tolerant as described in 10.5.2.6.1 and 10.5.2.6.2 shall be protected against mechanical injury.

10.5.3 Nonautomatic Controller.

10.5.3.1 Manual Electric Control at Controller.

10.5.3.1.1 There shall be a manually operated switch on the control panel so arranged that, when the motor is started manually, its operation cannot be affected by the pressure-actuated switch.

10.5.3.1.2 The arrangement shall also provide that the unit will remain in operation until manually shut down.

10.5.3.2* Emergency-Run Mechanical Control at Controller.

10.5.3.2.1 The controller shall be equipped with an emergency-run handle or lever that operates to mechanically close the motor-circuit switching mechanism.

10.5.3.2.1.1 This handle or lever shall provide for nonautomatic continuous running operation of the motor(s), independent of any electric control circuits, magnets, or equivalent devices and independent of the pressure-activated control switch.

10.5.3.2.1.2 Means shall be incorporated for mechanically latching or holding the handle or lever for manual operation in the actuated position.

10.5.3.2.1.3 The mechanical latching shall not be automatic, but at the option of the operator.

10.5.3.2.2 The handle or lever shall be arranged to move in one direction only from the off position to the final position.

10.5.3.2.3 The motor starter shall return automatically to the off position in case the operator releases the starter handle or lever in any position but the full running position.

10.5.4 Methods of Stopping. Shutdown shall be accomplished by the methods in 10.5.4.1 and 10.5.4.2.

10.5.4.1 Manual. Manual shutdown shall be accomplished by operation of a pushbutton on the outside of the controller enclosure that, in the case of automatic controllers, shall return the controller to the full automatic position.

10.5.4.2 Automatic Shutdown After Automatic Start. Where provided, automatic shutdown after automatic start shall comply with the following:

Copyright National Fire Protection Association
Provided by IHS under license with NFPA
No reproduction or networking permitted without license from IHS
Not for Resale

(1) Unless the requirements of 10.5.4.2(3) are met, automatic shutdown shall be permitted only where the controller is arranged for automatic shutdown after all starting and running causes have returned to normal.
(2) A running period timer set for at least 10 minutes running time shall be permitted to commence at initial operation.
(3) The requirements of 10.5.4.2(1) shall not apply and automatic shutdown shall not be permitted where the pump constitutes the sole supply of a fire sprinkler or standpipe system or where the authority having jurisdiction has required manual shutdown.

10.6 Controllers Rated in Excess of 600 V.

10.6.1 Control Equipment. Controllers rated in excess of 600 V shall comply with the requirements of Chapter 10, except as provided in 10.6.2 through 10.6.8.

10.6.2 Provisions for Testing.

10.6.2.1 The provisions of 10.3.4.3 and 10.3.4.4 shall not apply.

10.6.2.2 An ammeter(s) shall be provided on the controller with a suitable means for reading the current in each phase.

10.6.2.3 An indicating voltmeter(s), deriving power of not more than 125 V from a transformer(s) connected to the high-voltage supply, shall also be provided with a suitable means for reading each phase voltage.

10.6.3 Disconnecting Under Load.

10.6.3.1 Provisions shall be made to prevent the isolating switch from being opened under load.

10.6.3.2 A load-break disconnecting means shall be permitted to be used in lieu of the isolating switch if the fault closing and interrupting ratings equal or exceed the requirements of the installation.

10.6.4 Pressure-Actuated Switch Location. Special precautions shall be taken in locating the pressure-actuated switch called for in 10.5.2.1 to prevent any water leakage from coming in contact with high-voltage components.

10.6.5 Low-Voltage Control Circuit.

10.6.5.1 The low-voltage control circuit shall be supplied from the high-voltage source through a stepdown transformer(s) protected by high-voltage fuses in each primary line.

10.6.5.2 The transformer power supply shall be interrupted when the isolating switch is in the open position.

10.6.5.3 The secondary of the transformer and control circuitry shall otherwise comply with 10.3.5.

10.6.5.4 One secondary line shall be grounded unless all control and operator devices are rated for use at the high (primary) voltage.

10.6.6 Indicators on Controller.

10.6.6.1 Specifications for controllers rated in excess of 600 V differ from those in 10.4.6.

10.6.6.2 A visible indicator shall be provided to indicate that power is available.

10.6.6.3 The current supply for the visible indicator shall come from the secondary of the control circuit transformer through resistors, if found necessary, or from a small-capacity stepdown transformer, which shall reduce the control transformer secondary voltage to that required for the visible indicator.

10.6.6.4 If the visible indicator is a pilot lamp, it shall be accessible for replacement.

10.6.7 Protection of Personnel from High Voltage. Necessary provisions shall be made, including such interlocks as might be needed, to protect personnel from accidental contact with high voltage.

10.6.8 Disconnecting Means. A contactor in combination with current-limiting motor circuit fuses shall be permitted to be used in lieu of the circuit breaker (disconnecting means) required in 10.4.3.1.1 if all of the following requirements are met:

(1) Current-limiting motor circuit fuses shall be mounted in the enclosure between the isolating switch and the contactor and shall interrupt the short-circuit current available at the controller input terminals.
(2) These fuses shall have an adequate interrupting rating to provide the suitability rating *(see 10.1.2.2)* of the controller.
(3) The current-limiting fuses shall be sized to hold 600 percent of the full-load current rating of the motor for at least 100 seconds.
(4) A spare set of fuses of the correct rating shall be kept readily available in a compartment or rack within the controller enclosure.

10.6.9 Locked Rotor Overcurrent Protection.

10.6.9.1 Tripping of the locked rotor overcurrent device required by 10.4.4 shall be permitted to be accomplished by opening the motor contactor coil circuit(s) to drop out the contactor.

10.6.9.2 Means shall be provided to restore the controller to normal operation by an external manually reset device.

10.6.10 Emergency-Run Mechanical Control at Controller.

10.6.10.1 The controller shall comply with 10.5.3.2.1 and 10.5.3.2.2 except that the mechanical latching can be automatic.

10.6.10.2 Where the contactor is latched in, the locked rotor overcurrent protection of 10.4.4 shall not be required.

10.7* Limited Service Controllers.

10.7.1 Limitations. Limited service controllers consisting of automatic controllers for across-the-line starting of squirrel-cage motors of 30 hp or less, 600 V or less, shall be permitted to be installed where such use is acceptable to the authority having jurisdiction.

10.7.2 Requirements. The provisions of Sections 10.1 through 10.5 shall apply, unless specifically addressed in 10.7.2.1 through 10.7.2.4.

10.7.2.1 In lieu of 10.4.3.3.1(2) and 10.4.4, the locked rotor overcurrent protection shall be permitted to be achieved by using an inverse time nonadjustable circuit breaker having a standard rating between 150 percent and 250 percent of the motor full-load current.

10.7.2.2 In lieu of 10.1.2.5.1, each controller shall be marked "Limited Service Controller" and shall show plainly the name of the manufacturer, the identifying designation, and the complete electrical rating.

10.7.2.3 The controller shall have a short-circuit current rating not less than 10,000 A.

10.7.2.4 The manually operated isolating switch specified in 10.4.2 shall not be required.

Copyright National Fire Protection Association
Provided by IHS under license with NFPA
No reproduction or networking permitted without license from IHS
Not for Resale

10.8* Power Transfer for Alternate Power Supply.

10.8.1 General.

10.8.1.1 Where required by the authority having jurisdiction or to meet the requirements of 9.3.2 where an on-site electrical power transfer device is used for power source selection, such switch shall comply with the provisions of Section 10.8 as well as Sections 10.1, 10.2, and 10.3 and 10.4.1.

10.8.1.2 Manual transfer switches shall not be used to transfer power between the normal supply and the alternate supply to the fire pump controller.

10.8.1.3 No remote device(s) shall be installed that will prevent automatic operation of the transfer switch.

10.8.2* Fire Pump Controller and Transfer Switch Arrangements.

10.8.2.1 Arrangement I (Listed Combination Fire Pump Controller and Power Transfer Switch).

10.8.2.1.1 Self-Contained Power Switching Assembly. Where the power transfer switch consists of a self-contained power switching assembly, such assembly shall be housed in a barriered compartment of the fire pump controller or in a separate enclosure attached to the controller and marked "Fire Pump Power Transfer Switch."

10.8.2.1.2 Isolating Switch.

10.8.2.1.2.1 An isolating switch, complying with 10.4.2, located within the power transfer switch enclosure or compartment shall be provided ahead of the alternate input terminals of the transfer switch.

10.8.2.1.2.2 The isolating switch shall be suitable for the available short circuit of the alternate source.

10.8.2.1.3 Alternate Source — Second Utility Power Source. Where the alternate source is provided by a second utility power source, the transfer switch emergency side shall be provided with an isolation switch complying with 10.4.2 and a circuit breaker complying with 10.4.3 and 10.4.4.

10.8.2.1.4 Where the alternate source is supplied by one or more upstream transfer switches that can singly or in combination feed utility or on-site generated power to the fire pump controller, the controller shall be equipped with the alternate side circuit breaker and isolating switch in accordance with 10.8.2.1.3.

10.8.2.1.5 Where the alternate source is supplied by a generator whose capacity exceeds 225 percent of the fire pump motor's rated full-load current, the controller shall be equipped with the alternate side circuit breaker and isolating switch in accordance with 10.8.2.1.3.

10.8.2.1.6 Cautionary Marking. The fire pump controller and transfer switch *(see 10.8.2.1)* shall each have a cautionary marking to indicate that the isolation switch for both the controller and the transfer switch is opened before servicing the controller, transfer switch, or motor.

10.8.2.2 Arrangement II (Individually Listed Fire Pump Controller and Power Transfer Switch). The following shall be provided:

(1) A fire pump controller power transfer switch complying with Sections 9.6 and 10.8 and a fire pump controller shall be provided.
(2) An isolating switch, or service disconnect where required, ahead of the normal input terminals of the transfer switch shall be provided.
(3) The transfer switch overcurrent protection shall be selected or set to indefinitely carry the locked rotor current of the fire pump motor where the alternate source is supplied by a second utility.
(4) An isolating switch ahead of the alternate source input terminals of the transfer switch shall meet the following requirements:
   (a) The isolating switch shall be lockable in the on position.
   (b) A placard shall be externally installed on the isolating switch stating "Fire Pump Isolating Switch," with letters at least 1 in. (25 mm) in height.
   (c) A placard shall be placed adjacent to the fire pump controller stating the location of the isolating switch and the location of the key (if the isolating switch is locked).
   (d) The isolating switch shall be supervised to indicate when it is not closed, by one of the following methods:
      i. Central station, proprietary, or remote station signal service
      ii. Local signaling service that will cause the sounding of an audible signal at a constantly attended point
      iii. Locking the isolating switch closed
      iv. Sealing of isolating switches and approved weekly recorded inspections where isolating switches are located within fenced enclosures or in buildings under the control of the owner
   (e) This supervision shall operate an audible and visible signal on the transfer switch and permit monitoring at a remote point where required.

10.8.2.3 Transfer Switch. Each fire pump shall have its own dedicated transfer switch(es) where a transfer switch(es) is required.

10.8.3 Power Transfer Switch Requirements.

10.8.3.1 Listing. The power transfer switch shall be specifically listed for fire pump service.

10.8.3.2 Suitability. The power transfer switch shall be suitable for the available short-circuit currents at the transfer switch normal and alternate input terminals.

10.8.3.3 Electrically Operated and Mechanically Held. The power transfer switch shall be electrically operated and mechanically held.

10.8.3.4 Horsepower or Ampere Rating.

10.8.3.4.1 Where rated in horsepower, the power transfer switch shall have a horsepower rating at least equal to the motor horsepower.

10.8.3.4.2 Where rated in amperes, the power transfer switch shall have an ampere rating not less than 115 percent of the motor full-load current and also suitable for switching the motor locked rotor current.

10.8.3.5 Manual Means of Operation.

10.8.3.5.1 A means for safe manual (nonelectrical) operation of the power transfer switch shall be provided.

Copyright National Fire Protection Association
Provided by IHS under license with NFPA
No reproduction or networking permitted without license from IHS
Not for Resale

10.8.3.5.2 This manual means shall not be required to be externally operable.

10.8.3.6 Undervoltage-Sensing Devices. Unless the requirements of 10.8.3.6.5 are met, the requirements of 10.8.3.6.1 through 10.8.3.6.4 shall apply. Turning off the normal source isolating switch or the normal source circuit breaker shall not inhibit the transfer switch from operating as required by 10.8.3.6.1 through 10.8.3.6.4.

10.8.3.6.1 The power transfer switch shall be provided with undervoltage-sensing devices to monitor all ungrounded lines of the normal power source.

10.8.3.6.2 Where the voltage on any phase at the load terminals of the circuit breaker within the fire pump controller falls below 85 percent of motor-rated voltage, the power transfer switch shall automatically initiate starting of the standby generator, if provided and not running, and initiate transfer to the alternate source.

10.8.3.6.3 Where the voltage on all phases of the normal source returns to within acceptable limits, the fire pump controller shall be permitted to be retransferred to the normal source.

10.8.3.6.4 Phase reversal of the normal source power *(see 10.4.6.2)* shall cause a simulated normal source power failure upon sensing phase reversal.

10.8.3.6.5 The requirements of 10.8.3.6.1 through 10.8.3.6.4 shall not apply where the power transfer switch is electrically upstream of the fire pump controller circuit breaker, and voltage shall be permitted to be sensed at the input to the power transfer switch in lieu of at the load terminals of the fire pump controller circuit breaker.

10.8.3.7 Voltage- and Frequency-Sensing Devices. Unless the requirements of 10.8.3.7.3 are met, the requirements of 10.8.3.7.1 and 10.8.3.7.2 shall apply.

10.8.3.7.1 Voltage- and frequency-sensing devices shall be provided to monitor at least one ungrounded conductor of the alternate power source.

10.8.3.7.2 Transfer to the alternate source shall be inhibited until there is adequate voltage and frequency to serve the fire pump load.

10.8.3.7.3 Where the alternate source is provided by a second utility power source, the requirements of 10.8.3.7.1 and 10.8.3.7.2 shall not apply, and undervoltage-sensing devices shall monitor all ungrounded conductors in lieu of a frequency-sensing device.

10.8.3.8 Visible Indicators. Two visible indicators shall be provided to externally indicate the power source to which the fire pump controller is connected.

10.8.3.9 Retransfer.

10.8.3.9.1 Means shall be provided to delay retransfer from the alternate power source to the normal source until the normal source is stabilized.

10.8.3.9.2 This time delay shall be automatically bypassed if the alternate source fails.

10.8.3.10 In-Rush Currents. Means shall be provided to prevent higher than normal in-rush currents when transferring the fire pump motor from one source to the other.

10.8.3.11 Overcurrent Protection. The power transfer switch shall not have integral short circuit or overcurrent protection.

10.8.3.12 Additional Requirements. The following shall be provided:

(1) A device to delay starting of the alternate source generator to prevent nuisance starting in the event of momentary dips and interruptions of the normal source
(2) A circuit loop to the alternate source generator whereby either the opening or closing of the circuit will start the alternate source generator (when commanded by the power transfer switch) *(see 10.8.3.6)*
(3) A means to prevent sending of the signal for starting of the alternate source generator when commanded by the power transfer switch, if the alternate isolating switch or the alternate circuit breaker (if installed) is in open or tripped position

10.8.3.12.1 The alternate isolating switch and the alternate circuit breaker (if installed) shall be monitored to indicate when one of them is in open or tripped position, as specified in 10.8.3.12(3).

10.8.3.12.2 When interlocked, monitoring of both switches in 10.8.3.12.1 shall not be required.

10.8.3.12.3 Supervision shall operate an audible and visible signal on the fire pump controller/automatic transfer switch combination and permit monitoring at a remote point where required.

10.8.3.13 Momentary Test Switch. A momentary test switch, externally operable, shall be provided on the enclosure that will simulate a normal power source failure.

10.8.3.14 Remote Indication. Auxiliary open or closed contacts mechanically operated by the fire pump power transfer switch mechanism shall be provided for remote indication in accordance with 10.4.8.

10.9 Controllers for Additive Pump Motors.

10.9.1 Control Equipment. Controllers for additive pump motors shall comply with the requirements of Sections 10.1 through 10.5 or Section 10.7 (and Section 10.8, where required) unless specifically addressed in 10.9.2 through 10.9.5.

10.9.2 Automatic Starting. In lieu of the pressure-actuated switch described in 10.5.2.1, automatic starting shall be capable of being accomplished by the automatic opening of a closed circuit loop containing this fire protection equipment.

10.9.3 Methods of Stopping.

10.9.3.1 Manual shutdown shall be provided.

10.9.3.2 Automatic shutdown shall not be permitted.

10.9.4 Lockout.

10.9.4.1 Where required, the controller shall contain a lockout feature where used in a duty-standby application.

10.9.4.2 Where supplied, this lockout shall be indicated by a visible indicator and provisions for annunciating the condition at a remote location.

10.9.5 Marking. The controller shall be marked "Additive Pump Controller."

Copyright National Fire Protection Association
Provided by IHS under license with NFPA
No reproduction or networking permitted without license from IHS
Not for Resale

10.10* Controllers with Variable Speed Pressure Limiting Control.

10.10.1 Control Equipment.

10.10.1.1 Controllers equipped with variable speed pressure limiting control shall comply with the requirements of Chapter 10, except as provided in 10.10.1 through 10.10.11.

10.10.1.2 Controllers with variable speed pressure limiting control shall be listed for fire service.

10.10.1.3 Variable Speed Pressure Limiting Control. The variable speed pressure limiting control shall have a horsepower rating at least equal to the motor horsepower or, where rated in amperes, shall have an ampere rating not less than the motor full-load current.

10.10.2 Additional Marking. In addition to the markings required in 10.1.2.5.1, the controller shall be marked with the maximum ambient temperature rating.

10.10.3* Bypass Operation.

10.10.3.1* Upon failure of the variable speed pressure limiting control to keep the system pressure at or above the set pressure of the variable speed pressure limiting control system, the controller shall bypass and isolate the variable speed pressure limiting control system and operate the pump at rated speed.

10.10.3.1.1 Low Pressure. If the system pressure remains below the set pressure for more than 15 seconds, the bypass operation shall occur.

10.10.3.1.2* Drive Not Operational. If the variable speed drive indicates that it is not operational within 5 seconds, the bypass operation shall occur.

10.10.3.1.3* Means shall be provided to prevent higher than normal in-rush currents when transferring the fire pump motor from the variable speed mode to the bypass mode.

10.10.3.2 Once the variable speed pressure limiting control is bypassed, the unit shall remain bypassed until shut down.

10.10.3.3 The bypass contactors shall be operable using the emergency-run handle or lever defined in 10.5.3.2.

10.10.4 Isolation.

10.10.4.1 The variable speed drive shall be line and load isolated when not in operation.

10.10.4.2 The variable speed drive load isolation contactor and the bypass contactor shall be mechanically and electrically interlocked to prevent simultaneous closure.

10.10.5* Circuit Protection.

10.10.5.1 Separate variable speed drive circuit protection shall be provided between the line side of the variable speed drive and the load side of the circuit breaker required in 10.4.3.

10.10.5.2 The circuit protection required in 10.10.5.1 shall be coordinated such that the circuit breaker in 10.4.3 does not trip due to a fault condition in the variable speed circuitry.

10.10.6 Power Quality.

10.10.6.1 Power quality correction equipment shall be located in the variable speed circuit. As a minimum, 5 percent line reactance shall be provided.

10.10.6.2 Coordination shall not be required where the system voltage does not exceed 480 V and cable lengths between the motor and controller do not exceed 100 ft (30.5 m) *(see 10.10.6.3)*.

10.10.6.3* Where higher system voltages or longer cable lengths exist, the cable length and motor requirements shall be coordinated.

10.10.7 Local Control.

10.10.7.1 All control devices required to keep the controller in automatic operation shall be within lockable cabinets.

10.10.7.2 The variable speed pressure sensing element connected in accordance with 10.5.2.1.6.5 shall only be used to control the variable speed drive.

10.10.7.3 Means shall be provided to manually select between variable speed and bypass mode.

10.10.7.4 Common pressure control shall not be used for multiple pump installations. Each controller pressure sensing control circuit shall operate independently.

10.10.8 Indicating Devices on Controller.

10.10.8.1 Drive Failure. A visible indicator shall be provided to indicate when the variable speed drive has failed.

10.10.8.2 Bypass Mode. A visible indicator shall be provided to indicate when the controller is in bypass mode.

10.10.8.3 Variable Speed Pressure Limiting Control Overpressure. Visible indication shall be provided on all controllers equipped with variable speed pressure limiting control to actuate at 115 percent of set pressure.

10.10.9 Controller Contacts for Remote Indication. Controllers shall be equipped with contacts (open or closed) to operate circuits for the conditions in 10.10.8.

10.10.10 System Performance.

10.10.10.1* The controller shall be provided with suitable adjusting means to account for various field conditions.

10.10.10.2 Operation at reduced speed shall not result in motor overheating.

10.10.10.3 The maximum operating frequency shall not exceed line frequency.

10.10.11 Critical Settings. Means shall be provided and permanently attached to the inside of the controller enclosure to record the following settings:

(1) Variable speed pressure limiting set point setting
(2) Pump start pressure
(3) Pump stop pressure

Chapter 11 Diesel Engine Drive

11.1 General.

11.1.1 Applications. This chapter provides requirements for minimum performance of diesel engine drivers.

11.1.2 Accessory devices, such as monitoring and signaling means, are included where necessary to ensure minimum performance of the aforementioned equipment.

Copyright National Fire Protection Association
Provided by IHS under license with NFPA
No reproduction or networking permitted without license from IHS
Not for Resale

11.1.3* Engine Type.

11.1.3.1 Diesel engines for fire pump drive shall be of the compression ignition type.

11.1.3.2 Spark-ignited internal combustion engines shall not be used.

11.2 Engines.

11.2.1 Listing. Engines shall be listed for fire pump service.

11.2.2 Engine Ratings.

11.2.2.1 Engines shall have a nameplate indicating the listed horsepower rating available to drive the pump.

11.2.2.2* The horsepower capability of the engine, when equipped for fire pump service, shall not be less than 10 percent greater than the listed horsepower on the engine nameplate.

11.2.2.3 Engines shall be acceptable for horsepower ratings listed by the testing laboratory for standard SAE conditions.

11.2.2.4* A deduction of 3 percent from engine horsepower rating at standard SAE conditions shall be made for diesel engines for each 1000 ft (300 m) of altitude above 300 ft (91 m).

11.2.2.5* A deduction of 1 percent from engine horsepower rating as corrected to standard SAE conditions shall be made for diesel engines for every 10°F (5.6°C) above 77°F (25°C) ambient temperature.

11.2.2.6 Where right-angle gear drives *(see 11.2.3.2)* are used between the vertical turbine pump and its driver, the horsepower requirement of the pump shall be increased to allow for power loss in the gear drive.

11.2.2.7 After complying with the requirements of 11.2.2.1 through 11.2.2.6, engines shall have a 4-hour minimum horsepower rating equal to or greater than the brake horsepower required to drive the pump at its rated speed under any conditions of pump load.

11.2.3 Engine Connection to Pump.

11.2.3.1 Horizontal Shaft Pumps.

11.2.3.1.1 Engines shall be connected to horizontal shaft pumps by means of a flexible coupling or flexible connecting shaft listed for this service.

11.2.3.1.2 The flexible coupling shall be directly attached to the engine flywheel adapter or stub shaft. *(See Section 6.5.)*

11.2.3.2 Vertical Shaft Turbine–Type Pumps.

11.2.3.2.1 Unless the requirements of 11.2.3.2.2 are met, engines shall be connected to vertical shaft pumps by means of a right-angle gear drive with a listed flexible connecting shaft that will prevent undue strain on either the engine or gear drive. *(See Section 7.5.)*

11.2.3.2.2 The requirements of 11.2.3.2.1 shall not apply to diesel engines and steam turbines designed and listed for vertical installation with vertical shaft turbine–type pumps, which shall be permitted to employ solid shafts and shall not require a right-angle drive but shall require a nonreverse ratchet.

11.2.4 Instrumentation and Control.

11.2.4.1 Governor.

11.2.4.1.1 Engines shall be provided with a governor capable of regulating engine speed within a range of 10 percent between shutoff and maximum load condition of the pump.

11.2.4.1.2 The governor shall be field adjustable and set and secured to maintain rated pump speed at maximum pump load.

11.2.4.2 Variable Speed Pressure Limiting Control.

11.2.4.2.1 Variable speed pressure limiting control systems used on diesel engines for fire pump drive shall be listed for fire pump service and be capable of limiting the pump output total rated head (pressure) by reducing pump speed.

11.2.4.2.2 Pressure limiting control systems shall not replace the engine governor as defined in 11.2.4.1.

11.2.4.2.3 In the event of a failure of the pressure limiting control system, the engine shall be fully functional with the governor defined in 11.2.4.1.

11.2.4.2.4 A pressure sensing line shall be provided to the engine with a ½ in. (12.7 mm) nominal size inside diameter line, from a connection between the pump discharge flange and the discharge check valve.

11.2.4.3 Overspeed Shutdown Device.

11.2.4.3.1 Engines shall be provided with an overspeed shutdown device.

11.2.4.3.2 It shall be arranged to shut down the engine at a speed approximately 20 percent above rated engine speed and to be manually reset.

11.2.4.3.3 A means shall be provided to indicate an overspeed trouble signal to the automatic engine controller such that the controller cannot be reset until the overspeed shutdown device is manually reset to normal operating position.

11.2.4.4 Tachometer.

11.2.4.4.1 A tachometer shall be provided to indicate revolutions per minute of the engine, including zero, at all times.

11.2.4.4.2 The tachometer shall be the totalizing type, or an hour meter shall be provided to record total time of engine operation.

11.2.4.4.3 Tachometers with digital display shall be permitted to be blank when the engine is not running.

11.2.4.5 Oil Pressure Gauge. Engines shall be provided with an oil pressure gauge to indicate lubricating oil pressure.

11.2.4.6 Temperature Gauge. Engines shall be provided with a temperature gauge to indicate engine coolant temperature at all times.

11.2.4.7 Instrument Panel.

11.2.4.7.1 All engine instruments shall be placed on a panel secured to the engine or inside an engine base plate-mounted controller.

11.2.4.7.2 The engine instrument panel shall not be used as a junction box or conduit for any ac supply.

11.2.4.8* Automatic Controller Wiring in Factory. All connecting wires for automatic controllers shall be harnessed or flexibly enclosed, mounted on the engine, and connected in an engine junction box to terminals numbered to correspond with numbered terminals in the controller.

11.2.4.9* Automatic Control Wiring in the Field.

11.2.4.9.1 Interconnections between the automatic controller and engine junction box shall be made using stranded wire sized on a continuous-duty basis.

Copyright National Fire Protection Association
Provided by IHS under license with NFPA
No reproduction or networking permitted without license from IHS
Not for Resale

11.2.4.9.2 The dc interconnections between the automatic controller and engine junction box, and any ac power supply to the engine shall be routed in separate conduits.

11.2.4.10 Signal for Engine Running and Crank Termination.

11.2.4.10.1 Engines shall be provided with a speed-sensitive switch to signal engine running and crank termination.

11.2.4.10.2 Power for this signal shall be taken from a source other than the engine generator or alternator.

11.2.4.11 Wiring Elements.

11.2.4.11.1 All wiring on the engine, including starting circuitry, shall be sized on a continuous-duty basis.

11.2.4.11.2 Battery cables shall be sized in accordance with the engine manufacturer's recommendations considering the cable length required for the specific battery location.

11.2.4.12* Electronic Fuel Management Control.

11.2.4.12.1 Alternate Electronic Control Module. Engines that incorporate an electronic control module (ECM) to accomplish and control the fuel injection process shall have an alternate ECM permanently mounted and wired so the engine can produce its full rated power output in the event of a failure of the primary ECM.

11.2.4.12.2 ECM Voltage Protection. Both ECMs shall be protected from transient voltage spikes and reverse dc current.

11.2.4.12.3 ECM Selector Switch.

11.2.4.12.3.1 Operation. The transition from the primary ECM to the alternate ECM shall be accomplished manually with a single switch that has no off position.

11.2.4.12.3.2 Supervision. A visual indicator shall be provided on the engine instrument panel and a supervisory signal shall be provided to the controller when the ECM selector switch is positioned to the alternate ECM.

11.2.4.12.3.3* Power Output. The ECM shall not, for any reason, intentionally cause a reduction in the engine's ability to produce rated power output.

11.2.4.12.3.4 Sensors. Any sensor necessary for the function of the ECM that affects the engine's ability to produce its rated power output shall have a redundant sensor that shall operate automatically in the event of a failure of the primary sensor.

11.2.4.12.3.5 ECM Supervision. A common supervisory signal shall be provided to the controller in the event of any of the following:

(1) Fuel injection failure
(2) Low fuel pressure
(3) Any primary sensor failure

11.2.5 Starting Methods.

11.2.5.1 Starting Devices. Engines shall be equipped with a reliable starting device and shall accelerate to rated output speed within 20 seconds.

11.2.5.2 Electric Starting. Where electric starting is used, the electric starting device shall take current from a storage battery(ies).

11.2.5.2.1* Main Battery Contactors. The main battery contactors supplying current to the starting motor shall be capable of manual mechanical operation to energize the starting motor in the event of control circuit failure.

11.2.5.2.2 Number and Capacity of Batteries.

11.2.5.2.2.1 Each engine shall be provided with two storage battery units.

11.2.5.2.2.2 At 40°F (4.5°C), each battery unit shall have twice the capacity sufficient to maintain the cranking speed recommended by the engine manufacturer through a 3-minute attempt-to-start cycle, which is six consecutive cycles of 15 seconds of cranking and 15 seconds of rest.

11.2.5.2.3 Battery.

11.2.5.2.3.1 Lead-acid batteries shall be furnished in a dry charge condition with electrolyte liquid in a separate container.

11.2.5.2.3.2 Nickel-cadmium or other kinds of batteries shall be permitted to be installed in lieu of lead-acid batteries provided they meet the engine manufacturer's requirements.

11.2.5.2.4* Battery Recharging.

11.2.5.2.4.1 Two means for recharging storage batteries shall be provided.

11.2.5.2.4.2 One method shall be the generator or alternator furnished with the engine.

11.2.5.2.4.3 The other method shall be an automatically controlled charger taking power from an alternating current power source.

11.2.5.2.4.4 If an alternating current power source is not available or is not reliable, another charging method, in addition to the generator or alternator furnished with the engine, shall be provided.

11.2.5.2.5 Battery Chargers. The requirements for battery chargers shall be as follows:

(1) Chargers shall be specifically listed for fire pump service.
(2) The rectifier shall be a semiconductor type.
(3) The charger for a lead-acid battery shall be a type that automatically reduces the charging rate to less than 500 mA when the battery reaches a full charge condition.
(4) The battery charger at its rated voltage shall be capable of delivering energy into a fully discharged battery in such a manner that it will not damage the battery.
(5) The battery charger shall restore to the battery 100 percent of the battery's reserve capacity or ampere-hour rating within 24 hours.
(6) The charger shall be marked with the reserve capacity or ampere-hour rating of the largest capacity battery that it can recharge in compliance with 11.2.5.2.5(4).
(7) An ammeter with an accuracy of ±5 percent of the normal charging rate shall be furnished to indicate the operation of the charger.
(8) The charger shall be designed such that it will not be damaged or blow fuses during the cranking cycle of the engine when operated by an automatic or manual controller.
(9) The charger shall automatically charge at the maximum rate whenever required by the state of charge of the battery.
(10) The battery charger shall be arranged to indicate loss of current output on the load side of the direct current (dc) overcurrent protective device where not connected through a control panel. *[See 12.4.1.4(2).]*

Copyright National Fire Protection Association
Provided by IHS under license with NFPA
No reproduction or networking permitted without license from IHS
Not for Resale

11.2.5.2.6* Battery Location.

11.2.5.2.6.1 Storage batteries shall be rack supported above the floor, secured against displacement, and located where they will not be subject to excessive temperature, vibration, mechanical injury, or flooding with water.

11.2.5.2.6.2 Storage batteries shall be readily accessible for servicing.

11.2.5.2.6.3 Storage batteries shall not be located in front of the engine-mounted instruments and controls.

11.2.5.2.7 Current-Carrying Part Location. Current-carrying parts shall not be less than 12 in. (305 mm) above the floor level.

11.2.5.3 Hydraulic Starting.

11.2.5.3.1 General.

11.2.5.3.1.1 Where hydraulic starting is used, the accumulators and other accessories shall be cabinetized or so guarded that they are not subject to mechanical injury.

11.2.5.3.1.2 The cabinet shall be installed as close to the engine as practical so as to prevent serious pressure drop between the engine and the cabinet.

11.2.5.3.1.3 The diesel engine as installed shall be without starting aid except that a thermostatically controlled electric water jacket heater shall be employed.

11.2.5.3.1.4 The diesel as installed shall be capable of carrying its full rated load within 20 seconds after cranking is initiated with the intake air, room ambient temperature, and all starting equipment at 32°F (0°C).

11.2.5.3.2 Conditions. Hydraulic starting means shall comply with the following conditions:

(1) The hydraulic cranking device shall be a self-contained system that will provide the required cranking forces and engine starting revolutions per minute (rpm) as recommended by the engine manufacturer.
(2) Electrically operated means shall automatically provide and maintain the stored hydraulic pressure within the predetermined pressure limits.
(3) The means of automatically maintaining the hydraulic system within the predetermined pressure limits shall be energized from the main bus and the final emergency bus if one is provided.
(4) Means shall be provided to manually recharge the hydraulic system.
(5) The capacity of the hydraulic cranking system shall provide not fewer than six cranking cycles of not less than 15 seconds each.
(6) Each cranking cycle — the first three to be automatic from the signaling source — shall provide the necessary number of revolutions at the required rpm to permit the diesel engine to meet the requirements of carrying its full rated load within 20 seconds after cranking is initiated with intake air, room ambient temperature, and hydraulic cranking system at 32°F (0°C).
(7) The capacity of the hydraulic cranking system sufficient for three starts under conditions described in 11.2.5.3.2(5) shall be held in reserve and arranged so that the operation of a single control by one person will permit the reserve capacity to be employed.
(8) All controls for engine shutdown in the event of overspeed shall be 12 V dc or 24 V dc source to accommodate controls supplied on engine, and the following also shall apply:
   (a) In the event of such failure, the hydraulic cranking system shall provide an interlock to prevent the engine from recranking.
   (b) The interlock shall be manually reset for automatic starting when engine failure is corrected.

11.2.5.4 Air Starting.

11.2.5.4.1 Existing Requirements. In addition to the requirements of Section 11.1 through 11.2.4.7, 11.2.5.1, 11.2.6 through 11.6.2, 11.6.4, and 11.6.5, the requirements of 11.2.5.4 shall apply.

11.2.5.4.2 Automatic Controller Connections in Factory.

11.2.5.4.2.1 All conductors for automatic controllers shall be harnessed or flexibly enclosed, mounted on the engine, and connected in an engine junction box to terminals numbered to correspond with numbered terminals in the controller.

11.2.5.4.2.2 These requirements shall ensure ready connection in the field between the two sets of terminals.

11.2.5.4.3 Signal for Engine Running and Crank Termination.

11.2.5.4.3.1 Engines shall be provided with a speed-sensitive switch to signal running and crank termination.

11.2.5.4.3.2 Power for this signal shall be taken from a source other than the engine compressor.

11.2.5.4.4* Air Starting Supply.

11.2.5.4.4.1 The air supply container shall be sized for 180 seconds of continuous cranking without recharging.

11.2.5.4.4.2 There shall be a separate, suitably powered automatic air compressor or means of obtaining air from some other system, independent of the compressor driven by the fire pump engine.

11.2.5.4.4.3 Suitable supervisory service shall be maintained to indicate high and low air pressure conditions.

11.2.5.4.4.4 A bypass conductor with a manual valve or switch shall be installed for direct application of air from the air container to the engine starter in the event of control circuit failure.

11.2.6 Engine Cooling.

11.2.6.1 The engine cooling system shall be included as part of the engine assembly and shall be one of the following closed-circuit types:

(1) A heat exchanger type that includes a circulating pump driven by the engine, a heat exchanger, and an engine jacket temperature regulating device
(2) A radiator type that includes a circulating pump driven by the engine, a radiator, an engine jacket temperature regulating device, and an engine-driven fan for providing positive movement of air through the radiator

11.2.6.2 Coolant and Fill Openings.

11.2.6.2.1 An opening shall be provided in the circuit for filling the system, checking coolant level, and adding make-up coolant when required.

11.2.6.2.2 The coolant shall comply with the recommendation of the engine manufacturer.

--`,,```,,,,````-`-`,,`,,`,`,,`---
Copyright National Fire Protection Association
Provided by IHS under license with NFPA
No reproduction or networking permitted without license from IHS
Not for Resale

11.2.6.3* Heat Exchanger Water Supply Installation.

11.2.6.3.1 Heat Exchanger Water Supply.

11.2.6.3.1.1 The cooling water supply for a heat exchanger–type system shall be from the discharge of the pump taken off prior to the pump discharge check valve.

11.2.6.3.1.2 Threaded rigid piping shall be used for this connection.

11.2.6.3.1.3 The pipe connection in the direction of flow shall include an indicating manual shutoff valve, an approved flushing-type strainer in addition to the one that can be a part of the pressure regulator, a pressure regulator, an automatic valve, and a second indicating manual shutoff valve or a spring-loaded check valve.

11.2.6.3.1.4 Where two levels of separation for possible contaminants to the ground or potable water source are required by the authority having jurisdiction, dual spring-loaded check valves or backflow preventers shall be installed.

(A)* The spring-loaded check valve(s) shall replace the second indicating manual shutoff valve(s) in the cooling loop assembly as stated in 11.2.6.3.1.3.

(B)* If backflow preventers are used, the devices shall be listed for fire protection service and installed in parallel in the heating water supply and heating water supply bypass assembly.

(C) Where the authority having jurisdiction requires the installation of backflow prevention devices in connection with the engine, special consideration shall be given to the increased pressure loss, which will require that the cooling loop pipe size be evaluated and documented by engineering calculations to demonstrate compliance with the engine manufacturer's recommendation.

11.2.6.3.1.5 A pressure gauge shall be installed in the cooling water supply system on the engine side of the last manual valve.

11.2.6.3.2 Indicating Manual Shutoff Valve. The indicating manual shutoff valves shall have permanent labeling with minimum ½ in. (12.7 mm) text that indicates the following:

(1) For the valve in the heat exchanger water supply, "Normal/Open" for the normal open position when the controller is in the automatic position and "Caution: Nonautomatic/Closed" for the emergency or manual position
(2) For the valve in the heat exchanger water supply bypass, "Normal/Closed" for the normal closed position when the controller is in the automatic position and "Emergency/Open" for manual operation or when the engine is overheating

11.2.6.3.3 Pressure Regulator.

11.2.6.3.3.1 The pressure regulator shall be of such size and type that it is capable of and adjusted for passing approximately 120 percent of the cooling water required when the engine is operating at maximum brake horsepower and when the regulator is supplied with water at the pressure of the pump when it is pumping at 150 percent of its rated capacity.

11.2.6.3.3.2 The cooling water flow required shall be set based on the maximum ambient cooling water.

11.2.6.3.4 Automatic Valve. An automatic valve listed for fire protection service shall permit flow of cooling water to the engine when it is running.

11.2.6.3.4.1 Energy to operate the automatic valve shall come from the diesel driver or its batteries and shall not come from the building.

11.2.6.3.4.2 The automatic valve shall be normally closed.

11.2.6.3.4.3 The automatic valve shall not be required on a vertical shaft turbine–type pump or any other pump when there is no pressure in the discharge when the pump is idle.

11.2.6.4* Heat Exchanger Water Supply Bypass.

11.2.6.4.1 A threaded rigid pipe bypass line shall be installed around the heat exchanger water supply.

11.2.6.4.2 The pipe connection in the direction of flow shall include an indicating manual shutoff valve, an approved flushing-type strainer in addition to the one that can be a part of the pressure regulator, a pressure regulator, and an indicating manual shutoff valve or a spring-loaded check valve.

11.2.6.5 Pressure Gauge. A pressure gauge shall be installed in the cooling water supply system on the engine side of the last valve in the heat exchanger water supply and bypass supply.

11.2.6.6 Heat Exchanger Waste Outlet.

11.2.6.6.1 An outlet shall be provided for the wastewater line from the heat exchanger, and the discharge line shall not be less than one size larger than the inlet line.

11.2.6.6.2 The outlet line shall be as short as practical, shall provide discharge into a visible open waste cone, and shall have no valves in it.

11.2.6.6.3 The outlet shall be permitted to discharge to a suction reservoir provided a visual flow indicator and temperature indicator are installed.

11.2.6.6.4 When the waste outlet piping is longer than 15 ft (4.6 m) and/or its outlet discharges are more than 4 ft (1.2 m) higher than the heat exchanger, the pipe size shall be increased by at least one size.

11.2.6.7 Radiators.

11.2.6.7.1 General.

11.2.6.7.1.1 The heat from the primary circuit of a radiator shall be dissipated by air movement through the radiator created by a fan included with, and driven by, the engine.

11.2.6.7.1.2 The radiator shall be designed to limit maximum engine operating temperature with an inlet air temperature of 120°F (49°C) at the combustion air cleaner inlet.

11.2.6.7.1.3 The radiator shall include the plumbing to the engine and a flange on the air discharge side for the connection of a flexible duct from the discharge side to the discharge air ventilator.

11.2.6.7.2 Fan.

11.2.6.7.2.1 The fan shall push the air through the radiator to be exhausted from the room via the air discharge ventilator.

11.2.6.7.2.2 To ensure adequate airflow through the room and the radiator, the radiator cooling package shall be capable of a 0.5 in. water column (13 mm water column) restriction created by the combination of the air supply and the discharge ventilators.

Copyright National Fire Protection Association
Provided by IHS under license with NFPA
No reproduction or networking permitted without license from IHS
Not for Resale

11.2.6.7.2.3 This external restriction shall be in addition to the radiator, fan guard, and other engine component obstructions.

11.2.6.7.2.4 The fan shall be guarded for personnel protection.

11.3* Pump and Engine Protection.

11.3.1 Pump Room Drainage. The floor or surface around the pump and engine shall be pitched for adequate drainage of escaping water away from critical equipment, such as pump, engine, controller, fuel tank, and so forth.

11.3.2* Ventilation.

11.3.2.1 Ventilation shall be provided for the following functions:

(1) To control the maximum temperature to 120°F (49°C) at the combustion air cleaner inlet with engine running at rated load
(2) To supply air for engine combustion
(3) To remove any hazardous vapors
(4) To supply and exhaust air as necessary for radiator cooling of the engine when required

11.3.2.2 The ventilation system components shall be coordinated with the engine operation.

11.3.2.3* Air Supply Ventilator.

11.3.2.3.1 The air supply ventilator shall be considered to include anything in the air supply path to the room.

11.3.2.3.2 The total air supply path to the pump room shall not restrict the flow of the air more than 0.2 in. water column (5.1 mm water column).

11.3.2.4* Air Discharge Ventilator.

11.3.2.4.1 The air discharge ventilator shall be considered to include anything in the air discharge path from the engine to the outdoors.

11.3.2.4.2 The air discharge ventilator shall allow sufficient air to exit the pump room to satisfy 11.3.2.

11.3.2.4.3 Radiator-Cooled Engines.

11.3.2.4.3.1 For radiator-cooled engines, the radiator discharge shall be ducted outdoors in a manner that will prevent recirculation.

11.3.2.4.3.2 The duct shall be attached to the radiator via a flexible section.

11.3.2.4.3.3 The air discharge path for radiator-cooled engines shall not restrict the flow of air more than 0.3 in. water column (7.6 mm water column).

11.3.2.4.3.4 A recirculation duct is acceptable for cold weather operation provided that the following requirements are met:

(1) The recirculation airflow shall be regulated by a thermostatically controlled damper.
(2) The control damper shall fully close in a failure mode.
(3) The recirculated air shall be ducted to prevent direct recirculation to the radiator.
(4) The recirculation duct shall not cause the temperature at the combustion air cleaner inlet to rise above 120°F (49°C).

11.4 Fuel Supply and Arrangement.

11.4.1 Plan Review. Before any fuel system is installed, plans shall be prepared and submitted to the authority having jurisdiction for agreement on suitability of the system for prevailing conditions.

11.4.2* Fuel Line Protection. A guard, pipe protection, or approved double-walled pipe shall be provided for all exposed fuel lines.

11.4.3* Fuel Tank Capacity.

11.4.3.1* Fuel supply tank(s) shall have a capacity at least equal to 1 gal per hp (5.07 L per kW), plus 5 percent volume for expansion and 5 percent volume for sump.

11.4.3.2 Larger-capacity tanks could be required and shall be determined by prevailing conditions, such as refill cycle and fuel heating due to recirculation, and shall be subject to special conditions in each case.

11.4.3.3 The fuel supply tank and fuel shall be reserved exclusively for the fire pump diesel engine.

11.4.4 Multiple Pumps. There shall be a separate fuel line and separate fuel supply tank for each engine.

11.4.5* Fuel Supply Location.

11.4.5.1 Diesel fuel supply tanks shall be located above ground in accordance with municipal or other ordinances and in accordance with requirements of the authority having jurisdiction and shall not be buried.

11.4.5.2 The engine fuel supply (suction) connection shall be located on the tank so that 5 percent of the tank volume provides a sump volume not usable by the engine.

11.4.5.3 The fuel supply shall be located on a side of the tank at the level of the 5 percent sump volume.

11.4.5.4 The inlet to the fuel supply line shall be located so that its opening is no lower than the level of the engine fuel transfer pump.

11.4.5.5 The engine manufacturer's fuel pump static head pressure limits shall not be exceeded when the level of fuel in the tank is at a maximum.

11.4.5.6 The fuel return line shall be installed according to the engine manufacturer's recommendation. In zones where freezing temperatures [32°F (0°C)] could be encountered, the fuel tanks shall be located in the pump room.

11.4.5.7 Means other than sight tubes for continuous indicating of the amount of fuel in each storage tank shall be provided.

11.4.5.8 Each tank shall have suitable fill, drain, and vent connections.

11.4.6* Fuel Piping.

11.4.6.1 Flame-resistant reinforced flexible hose listed for this service with threaded connections shall be provided at the engine for connection to fuel system piping.

11.4.6.2 Fuel piping shall not be galvanized steel or copper.

11.4.6.3 There shall be no shutoff valve in the fuel return line to the tank.

Copyright National Fire Protection Association
Provided by IHS under license with NFPA
No reproduction or networking permitted without license from IHS
Not for Resale

11.4.7* Fuel Type.

11.4.7.1 The type and grade of diesel fuel shall be as specified by the engine manufacturer.

11.4.7.2 In areas where local air quality management regulations only allow the use of DF #1 fuel, and no diesel fire pump driver is available listed for use with DF #1 fuel, an engine listed for use with DF #2 shall be permitted to be used but shall have the nameplate rated horsepower derated 10 percent, provided the engine manufacturer approves the use of DF #1 fuel.

11.4.7.3 The grade of fuel shall be indicated on the engine nameplate required in 11.2.2.1.

11.4.7.4 The grade of fuel oil shall be indicated on the fuel tank by letters that are a minimum of 6 in. (152 mm) in height and in contrasting color to the tank.

11.4.7.5 Residual fuels, domestic heating furnace oils, and drained lubrication oils shall not be used.

11.4.8 Fuel Solenoid Valve. Where an electric solenoid valve is used to control the engine fuel supply, it shall be capable of manual mechanical operation or of being manually bypassed in the event of a control circuit failure.

11.5 Engine Exhaust.

11.5.1 Independent Exhaust. Each pump engine shall have an independent exhaust system.

11.5.2 Exhaust Discharge Location.

11.5.2.1 Exhaust from the engine shall be piped to a safe point outside the pump room and arranged to exclude water.

11.5.2.2 Exhaust gases shall not be discharged where they will affect persons or endanger buildings.

11.5.3* Exhaust Piping.

11.5.3.1 A flexible connection with a section of stainless steel, seamless or welded corrugated (not interlocked), not less than 12 in. (305 mm) in length shall be made between the engine exhaust outlet and exhaust pipe.

11.5.3.2 The exhaust pipe shall not be any smaller in diameter than the engine exhaust outlet and shall be as short as possible.

11.5.3.3 The exhaust pipe shall be covered with high-temperature insulation or otherwise guarded to protect personnel from injury.

11.5.3.4 The exhaust pipe and muffler, if used, shall be suitable for the use intended, and the exhaust back pressure shall not exceed the engine manufacturer's recommendations.

11.5.3.5 Exhaust pipes shall be installed with clearances of at least 9 in. (229 mm) to combustible materials.

11.5.3.6 Exhaust pipes passing directly through combustible roofs shall be guarded at the point of passage by ventilated metal thimbles that extend not less than 9 in. (229 mm) above and 9 in. (229 mm) below roof construction and are at least 6 in. (152 mm) larger in diameter than the exhaust pipe.

11.5.3.7 Exhaust pipes passing directly through combustible walls or partitions shall be guarded at the point of passage by one of the following methods:

(1) Metal ventilated thimbles not less than 12 in. (305 mm) larger in diameter than the exhaust pipe

(2) Metal or burned clay thimbles built in brickwork or other approved materials providing not less than 8 in. (203 mm) of insulation between the thimble and construction material

11.5.3.8 Exhaust systems shall terminate outside the structure at a point where hot gases, sparks, or products of combustion will discharge to a safe location. [**37:**8.2.3.1]

11.5.3.9 Exhaust system terminations shall not be directed towards combustible material or structures, or into atmospheres containing flammable gases, flammable vapors, or combustible dusts. [**37:**8.2.3.2]

11.5.3.10 Exhaust systems equipped with spark-arresting mufflers shall be permitted to terminate in Division 2 locations as defined in Article 500 of NFPA 70, *National Electrical Code*. [**37:**8.2.3.3]

11.5.3.11* Exhaust emission after treatment devices that have the potential to adversely impact the performance and reliability of the engine shall not be permitted.

11.5.3.12 Where required by the authority having jurisdiction, the installation of an exhaust emission after treatment device shall be of the active regeneration type with a pressure limiting device that shall permit the engine exhaust to bypass the after treatment device when the engine manufacturer's maximum allowed exhaust back pressure is exceeded.

11.5.4 Exhaust Manifold. Exhaust manifolds and turbochargers shall incorporate provisions to avoid hazard to the operator or to flammable material adjacent to the engine.

11.6* Driver System Operation.

11.6.1 Weekly Run.

11.6.1.1 Engines shall be started no less than once a week and run for no less than 30 minutes to attain normal running temperature.

11.6.1.2 Engines shall run smoothly at rated speed, except for engines addressed in 11.6.1.3.

11.6.1.3 Engines equipped with variable speed pressure limiting control shall be permitted to run at reduced speeds provided factory-set pressure is maintained and they run smoothly.

11.6.2* System Performance. Engines shall be kept clean, dry, and well lubricated to ensure adequate performance.

11.6.3 Battery Maintenance.

11.6.3.1 Storage batteries shall be kept charged at all times.

11.6.3.2 Storage batteries shall be tested frequently to determine the condition of the battery cells and the amount of charge in the battery.

11.6.3.3 Only distilled water shall be used in battery cells.

11.6.3.4 Battery plates shall be kept submerged at all times.

11.6.3.5 The automatic feature of a battery charger shall not be a substitute for proper maintenance of battery and charger.

11.6.3.6 Periodic inspection of both battery and charger shall be made.

11.6.3.7 This inspection shall determine that the charger is operating correctly, the water level in the battery is correct, and the battery is holding its proper charge.

Copyright National Fire Protection Association
Provided by IHS under license with NFPA
No reproduction or networking permitted without license from IHS
Not for Resale

11.6.4* Fuel Supply Maintenance.

11.6.4.1 The fuel storage tanks shall be kept as full as practical at all times, but never below 66 percent (two-thirds) of tank capacity. A fuel level indicator shall be provided to activate at the two-thirds tank level.

11.6.4.2 The tanks shall always be filled by means that will ensure removal of all water and foreign material.

11.6.5* Temperature Maintenance.

11.6.5.1 The temperature of the pump room, pump house, or area where engines are installed shall never be less than the minimum recommended by the engine manufacturer.

11.6.5.2 An engine jacket water heater shall be provided to maintain 120°F (49°C).

11.6.5.3 The engine manufacturer's recommendations for oil heaters shall be followed.

11.6.6 Emergency Starting and Stopping.

11.6.6.1 The sequence for emergency manual operation, arranged in a step-by-step manner, shall be posted on the fire pump engine.

11.6.6.2 It shall be the engine manufacturer's responsibility to list any specific instructions pertaining to the operation of this equipment during the emergency operation.

Chapter 12 Engine Drive Controllers

12.1 Application.

12.1.1 This chapter provides requirements for minimum performance of automatic/nonautomatic diesel engine controllers for diesel engine–driven fire pumps.

12.1.2 Accessory devices, such as fire pump alarm and signaling means, are included where necessary to ensure minimum performance of the equipment mentioned in 12.1.1.

12.1.3 General.

12.1.3.1 All controllers shall be specifically listed for diesel engine–driven fire pump service.

12.1.3.2 All controllers shall be completely assembled, wired, and tested by the manufacturer before shipment from the factory.

12.1.3.3 Markings.

12.1.3.3.1 All controllers shall be marked "Diesel Engine Fire Pump Controller" and shall show plainly the name of the manufacturer, the identifying designation, rated operating pressure, enclosure type designation, and complete electrical rating.

12.1.3.3.2 Where multiple pumps serving different areas or portions of the facility are provided, an appropriate sign shall be conspicuously attached to each controller indicating the area, zone, or portion of the system served by that pump or pump controller.

12.1.4 It shall be the responsibility of the pump manufacturer or its designated representative to make necessary arrangements for the services of a controller manufacturer's representative, where needed, for services and adjustment of the equipment during the installation, testing, and warranty periods.

12.2 Location.

12.2.1* Controllers shall be located as close as is practical to the engines they control and shall be within sight of the engines.

12.2.2 Controllers shall be so located or so protected that they will not be injured by water escaping from pumps or pump connections.

12.2.3 Current carrying parts of controllers shall not be less than 12 in. (305 mm) above the floor level.

12.2.4 Working clearances around controllers shall comply with NFPA 70, *National Electrical Code*, Article 110.

12.3 Construction.

12.3.1 Equipment.

12.3.1.1* All equipment shall be suitable for use in locations subject to a moderate degree of moisture, such as a damp basement.

12.3.1.2 Reliability of operation shall not be adversely affected by normal dust accumulations.

12.3.2 Mounting. All equipment not mounted on the engine shall be mounted in a substantial manner on a single noncombustible supporting structure.

12.3.3 Enclosures.

12.3.3.1* Mounting.

12.3.3.1.1 The structure or panel shall be securely mounted in, as a minimum, a NEMA Type 2 dripproof enclosure(s).

12.3.3.1.2 Where the equipment is located outside or special environments exist, suitably rated enclosures shall be used.

12.3.3.2 Grounding. The enclosures shall be grounded in accordance with NFPA 70, *National Electrical Code*, Article 250.

12.3.4 Locked Cabinet. All switches required to keep the controller in the automatic position shall be within locked cabinets having break glass panels.

12.3.5 Connections and Wiring.

12.3.5.1 Field Wiring.

12.3.5.1.1 All wiring between the controller and the diesel engine shall be stranded and sized to carry the charging or control currents as required by the controller manufacturer.

12.3.5.1.2 Such wiring shall be protected against mechanical injury.

12.3.5.1.3 Controller manufacturer's specifications for distance and wire size shall be followed.

12.3.5.2 Wiring Elements. Wiring elements of the controller shall be designed on a continuous-duty basis.

12.3.5.3 Field Connections.

12.3.5.3.1 A diesel engine fire pump controller shall not be used as a junction box to supply other equipment.

12.3.5.3.2 No undervoltage, phase loss, frequency sensitive, or other sensor(s) shall be installed that automatically or manually prohibits electrical actuation of the engine starting contactor.

Copyright National Fire Protection Association
Provided by IHS under license with NFPA
No reproduction or networking permitted without license from IHS
Not for Resale

12.3.5.3.3 Electrical supply conductors for pressure maintenance (jockey or make-up) pump(s) shall not be connected to the diesel engine fire pump controller.

12.3.5.3.4 Diesel engine fire pump controllers shall be permitted to supply essential and necessary ac and/or dc power to operate pump room dampers and engine oil heaters and other associated required engine equipment only when provided with factory-equipped dedicated field terminals and overcurrent protection.

12.3.6 Electrical Diagrams and Instructions.

12.3.6.1 A field connection diagram shall be provided and permanently attached to the inside of the enclosure.

12.3.6.2 The field connection terminals shall be plainly marked to correspond with the field connection diagram furnished.

12.3.6.3 For external engine connections, the field connection terminals shall be commonly numbered between the controller and the engine terminals.

12.3.7 Marking.

12.3.7.1 Each operating component of the controller shall be plainly marked with the identification symbol that appears on the electrical schematic diagram.

12.3.7.2 The markings shall be located so as to be visible after installation.

12.3.8* Instructions. Complete instructions covering the operation of the controller shall be provided and conspicuously mounted on the controller.

12.4 Components.

12.4.1 Indicators on Controller.

12.4.1.1 All visible indicators shall be plainly visible.

12.4.1.2* Visible indication shall be provided to indicate that the controller is in the automatic position. If the visible indicator is a pilot lamp, it shall be accessible for replacement.

12.4.1.3 Separate visible indicators and a common audible fire pump alarm capable of being heard while the engine is running and operable in all positions of the main switch except the off position shall be provided to immediately indicate the following conditions:

(1) Critically low oil pressure in the lubrication system. The controller shall provide means for testing the position of the pressure switch contacts without causing fire pump alarms.
(2) High engine jacket coolant temperature.
(3) Failure of engine to start automatically.
(4) Shutdown from overspeed.

12.4.1.4 Separate visible indicators and a common audible signal capable of being heard while the engine is running and operable in all positions of the main switch except the off position shall be provided to immediately indicate the following conditions:

(1) Battery failure or missing battery. Each controller shall be provided with a separate visible indicator for each battery.
(2) Battery charger failure. Each controller shall be provided with a separate visible indicator for battery charger failure and shall not require the audible signal for battery charger failure.
(3) Low air or hydraulic pressure. Where air or hydraulic starting is provided *(see 11.2.5 and 11.2.5.4)*, each pressure tank shall provide to the controller separate visible indicators to indicate low pressure.
(4) System overpressure, for engines equipped with variable speed pressure limiting controls, to actuate at 115 percent of set pressure.
(5) ECM selector switch in alternate ECM position (for engines with ECM controls only).
(6) Fuel injection malfunction (for engines with ECM only).
(7) Low fuel level. Signal at two-thirds tank capacity.

12.4.1.5 No audible signal silencing switch, other than the controller main switch, shall be permitted for the conditions reflected in 12.4.1.3 and 12.4.1.4.

12.4.1.5.1 A separate alarm silencing switch shall be used for the low fuel level indication in 12.4.1.4(7).

12.4.1.5.2 Any alarm silencing switch shall be located adjacent to the visual indicator and be clearly marked as such.

12.4.2 Signal Devices Remote from Controller.

12.4.2.1 Where the pump room is not constantly attended, audible or visible signals powered by a source other than the engine starting batteries and not exceeding 125 V shall be provided at a point of constant attendance.

12.4.2.2 The remote panel shall indicate the following:

(1) The engine is running (separate signal).
(2) The controller main switch has been turned to the off or manual position (separate signal).
(3)*There is trouble on the controller or engine (separate or common signals). *(See 12.4.1.4 and 12.4.1.5.)*

12.4.3 Controller Contacts for Remote Indication. Controllers shall be equipped with open or closed contacts to operate circuits for the conditions covered in 12.4.2.

12.4.4* Pressure Recorder.

12.4.4.1 A listed pressure recording device shall be installed to sense and record the pressure in each fire pump controller pressure-sensing line at the input to the controller.

12.4.4.2 The recorder shall be capable of operating for at least 7 days without being reset or rewound.

12.4.4.3 The pressure-sensing element of the recorder shall be capable of withstanding a momentary surge pressure of at least 400 psi (27.6 bar) or 133 percent of fire pump controller rated operating pressure, whichever is higher, without losing its accuracy.

12.4.4.4 The pressure recording device shall be spring wound mechanically or driven by reliable electrical means.

12.4.4.5 The pressure recording device shall not be solely dependent upon alternating current (ac) electric power as its primary power source.

12.4.4.6 Upon loss of ac electric power, the electric-driven recorder shall be capable of at least 24 hours of operation.

12.4.4.7 In a non-pressure-actuated controller, the pressure recorder shall not be required.

12.4.5 Voltmeter. A voltmeter with an accuracy of ±5 percent shall be provided for each battery bank to indicate the voltage during cranking.

Copyright National Fire Protection Association
Provided by IHS under license with NFPA
No reproduction or networking permitted without license from IHS
Not for Resale

12.5* Starting and Control.

12.5.1 Automatic and Nonautomatic.

12.5.1.1 An automatic controller shall be operable also as a nonautomatic controller.

12.5.1.2 The controller's primary source of power shall not be ac electric power.

12.5.2 Automatic Operation of Controller.

12.5.2.1 Water Pressure Control.

12.5.2.1.1* Pressure-Actuated Switch.

12.5.2.1.1.1 Unless the requirements of 12.5.2.1.1.2 are met, there shall be provided a pressure-actuated switch having adjustable high- and low-calibrated set-points as part of the controller.

12.5.2.1.1.2 The requirements of 12.5.2.1.1.1 shall not apply to a non-pressure-actuated controller, where the pressure-actuated switch shall not be required.

12.5.2.1.2 There shall be no pressure snubber or restrictive orifice employed within the pressure switch.

12.5.2.1.3 This switch shall be responsive to water pressure in the fire protection system.

12.5.2.1.4 The pressure-sensing element of the switch shall be capable of a momentary surge pressure of 400 psi (27.6 bar) or 133 percent of fire pump controller rated operating pressure, whichever is higher, without losing its accuracy.

12.5.2.1.5 Suitable provision shall be made for relieving pressure to the pressure-actuated switch to allow testing of the operation of the controller and the pumping unit. *[See Figure A.10.5.2.1(a) and Figure A.10.5.2.1(b).]*

12.5.2.1.6 Water pressure control shall be as follows:

(1) There shall be no shutoff valve in the pressure-sensing line.
(2) Pressure switch actuation at the low adjustment setting shall initiate the pump starting sequence if the pump is not already in operation.

12.5.2.2 Fire Protection Equipment Control.

12.5.2.2.1 Where the pump supplies special water control equipment (e.g., deluge valves, dry-pipe valves), the engine shall be started before the pressure-actuated switch(es) would do so.

12.5.2.2.2 Under such conditions, the controller shall be equipped to start the engine upon operation of the fire protection equipment.

12.5.2.3 Manual Electric Control at Remote Station. Where additional control stations for causing nonautomatic continuous operation of the pumping unit, independent of the pressure-actuated switch, are provided at locations remote from the controller, such stations shall not be operable to stop the engine.

12.5.2.4 Sequence Starting of Pumps.

12.5.2.4.1 The controller for each unit of multiple pump units shall incorporate a sequential timing device to prevent any one driver from starting simultaneously with any other driver.

12.5.2.4.2 Each pump supplying suction pressure to another pump shall be arranged to start before the pump it supplies.

12.5.2.4.3 If water requirements call for more than one pumping unit to operate, the units shall start at intervals of 5 to 10 seconds.

12.5.2.4.4 Failure of a leading driver to start shall not prevent subsequent drivers from starting.

12.5.2.5 External Circuits Connected to Controllers.

12.5.2.5.1 With pumping units operating singly or in parallel, the control conductors entering or leaving the fire pump controller and extending outside the fire pump room shall be so arranged as to prevent failure to start due to fault.

12.5.2.5.2 Breakage, disconnecting, shorting of the wires, or loss of power to these circuits shall be permitted to cause continuous running of the fire pump but shall not prevent the controller(s) from starting the fire pump(s) due to causes other than these external circuits.

12.5.2.5.3 All control conductors within the fire pump room that are not fault tolerant shall be protected against mechanical injury.

12.5.2.6 Sole Supply Pumps.

12.5.2.6.1 Shutdown shall be accomplished by manual or automatic means.

12.5.2.6.2 Automatic shutdown shall not be permitted where the pump constitutes the sole source of supply of a fire sprinkler or standpipe system or where the authority having jurisdiction has required manual shutdown.

12.5.2.7 Weekly Program Timer.

12.5.2.7.1 To ensure dependable operation of the engine and its controller, the controller equipment shall be arranged to automatically start and run the engine for at least 30 minutes once a week.

12.5.2.7.2 Means shall be permitted within the controller to manually terminate the weekly test provided a minimum of 30 minutes has expired.

12.5.2.7.3 A solenoid valve drain on the pressure control line shall be the initiating means.

12.5.2.7.4 Performance of this weekly program timer shall be recorded as a pressure drop indication on the pressure recorder. *(See 12.4.4.)*

12.5.2.7.5 In a non-pressure-actuated controller, the weekly test shall be permitted to be initiated by means other than a solenoid valve.

12.5.3 Nonautomatic Operation of Controller.

12.5.3.1 Manual Control at Controller.

12.5.3.1.1 There shall be a manually operated switch on the controller panel.

12.5.3.1.2 This switch shall be so arranged that operation of the engine, when manually started, cannot be affected by the pressure-actuated switch.

12.5.3.1.3 The arrangement shall also provide that the unit will remain in operation until manually shut down.

12.5.3.1.4 Failure of any of the automatic circuits shall not affect the manual operation.

Copyright National Fire Protection Association
Provided by IHS under license with NFPA
No reproduction or networking permitted without license from IHS
Not for Resale

12.5.3.2 Manual Testing of Automatic Operation.

12.5.3.2.1 The controller shall be arranged to manually start the engine by opening the solenoid valve drain when so initiated by the operator.

12.5.3.2.2 In a non-pressure-actuated controller, the manual test shall be permitted to be initiated by means other than a solenoid valve.

12.5.4 Starting Equipment Arrangement. The requirements for starting equipment arrangement shall be as follows:

(1) Two storage battery units, each complying with the requirements of 11.2.5.2, shall be provided and so arranged that manual and automatic starting of the engine can be accomplished with either battery unit.
(2) The starting current shall be furnished by first one battery and then the other on successive operations of the starter.
(3) The battery changeover shall be made automatically, except for manual start.
(4) In the event that the engine does not start after completion of its attempt-to-start cycle, the controller shall stop all further cranking and operate a visible indicator and audible fire pump alarm on the controller.
(5) The attempt-to-start cycle shall be fixed and shall consist of six crank periods of approximately 15-second duration separated by five rest periods of approximately 15-second duration.
(6) In the event that one battery is inoperative or missing, the control shall lock in on the remaining battery unit during the cranking sequence.

12.5.5 Methods of Stopping.

12.5.5.1 Manual Electric Shutdown. Manual shutdown shall be accomplished by either of the following:

(1) Operation of the main switch inside the controller
(2) Operation of a stop button on the outside of the controller enclosure as follows:
   (a) The stop button shall cause engine shutdown through the automatic circuits only if all starting causes have been returned to normal.
   (b) The controller shall then return to the full automatic position.

12.5.5.2* Automatic Shutdown After Automatic Start. The requirements for automatic shutdown after automatic start shall be as follows:

(1) If the controller is set up for automatic engine shutdown, the controller shall shut down the engine only after all starting causes have returned to normal and a 30-minute minimum run time has elapsed.
(2) When the engine overspeed shutdown device operates, the controller shall remove power from the engine running devices, prevent further cranking, energize the overspeed fire pump alarm, and lock out until manually reset.
(3) Resetting of the overspeed circuit shall be required at the engine and by resetting the controller main switch to the off position.
(4) The engine shall not shut down automatically on high water temperature or low oil pressure when any automatic starting or running cause exists, and the following also shall apply:
   (a) If no other starting or running cause exists during engine test, the engine shall shut down automatically on high water temperature or low oil pressure.
   (b) If after shutdown a starting cause occurs, the controller shall restart the engine and override the high water temperature and low oil shutdowns for the remainder of the test period.
(5) The controller shall not be capable of being reset until the engine overspeed shutdown device is manually reset.

12.5.6 Emergency Control. Automatic control circuits, the failure of which could prevent engine starting and running, shall be completely bypassed during manual start and run.

12.6 Air-Starting Engine Controllers.

12.6.1 Existing Requirements. In addition to the requirements in 12.1.1, 12.1.2, 12.1.3.1, 12.1.4 through 12.3.4, 12.3.8, 12.5.1 through 12.5.2.1.6(2), 12.5.2.4, 12.5.2.7, and 12.5.5.2 through 12.5.6, the requirements in Section 12.6 shall apply.

12.6.2 Assembly and Testing. All controllers shall be completely assembled and tested by the manufacturer before shipment from the factory.

12.6.3 Marking.

12.6.3.1 All controllers shall be marked "Diesel Engine Fire Pump Controller" and shall show plainly the name of the manufacturer, the identifying designation, and the complete rating.

12.6.3.2 Where multiple pumps serving different areas or portions of the facility are provided, an appropriate sign shall be conspicuously attached to each controller indicating the area, zone, or portion of the system served by that pump or pump controller.

12.6.4 Connections.

12.6.4.1 Field Connections.

12.6.4.1.1 All conductors from the controller to the engine junction box and any other required field wiring shall have adequate current carrying capacity.

12.6.4.1.2 Such conductors shall be protected against mechanical injury.

12.6.4.1.3 Controller manufacturer's specifications for distance and conductor size shall be followed.

12.6.4.2 Conductor Elements. Conductor elements of the controller shall be designed to operate on a continuous-duty basis.

12.6.5 Circuit Diagrams and Instructions.

12.6.5.1 A circuit diagram shall be provided and permanently attached to the inside of the enclosure showing exact circuitry for the controller, including identifying numbers of individual components.

12.6.5.2 All circuit terminals shall be plainly and commonly marked and numbered to correspond with the circuit diagram furnished.

12.6.5.3 For external engine connections, the connection strips shall be commonly numbered.

12.6.6 Marking.

12.6.6.1 Each operating component of the controller shall be marked plainly with an identifying number referenced to the circuit diagram.

12.6.6.2 The markings shall be located so as to be visible after installation.

Copyright National Fire Protection Association
Provided by IHS under license with NFPA
No reproduction or networking permitted without license from IHS
Not for Resale

12.6.7 Indicators on Controller.

12.6.7.1 A visible indicator(s) shall be provided to indicate that the controller is in the automatic position.

12.6.7.2 The visible indicator shall be accessible for replacement.

12.6.7.3 Separate visible indicators and a common audible fire pump alarm shall be provided to indicate trouble caused by the following conditions:

(1) Critically low oil pressure in the lubrication system. The controller shall provide means for testing the position of the pressure switch contacts without causing fire pump alarms.
(2) High engine jacket coolant temperature.
(3) Failure of engine to start automatically.
(4) Shutdown from overspeed.

12.6.7.4 Separate visible indicators and a common audible signal shall be provided to indicate trouble caused by the following conditions:

(1) Low air pressure. The air supply container shall be provided with a separate visible indicator to indicate low air pressure.
(2) Low fuel level. Signal at two-thirds tank capacity.

12.6.7.5 No audible signal silencing switch or valve, other than the controller main switch or valve, shall be permitted for the conditions reflected in 12.6.7.3.

12.6.7.6 Any alarm silencing switch shall be located adjacent to the visual indicator and be clearly marked as such.

12.6.7.7 Additional Fire Pump Alarms and Signals.

12.6.7.7.1 Where audible signals for the additional conditions listed in A.5.23 are incorporated with the engine fire pump alarms specified in 12.6.7.3, a silencing switch or valve for the additional A.5.23 audible signals shall be provided at the controller.

12.6.7.7.2 The circuit shall be arranged so that the audible signal will be activated if the silencing switch or valve is in the silent position when the supervised conditions are normal.

12.6.8 Remote Indication. Controllers shall be equipped to operate circuits for remote indication of the conditions covered in 12.4.1.3, 12.4.1.4, and 12.4.2.2.

12.6.9* Pressure Recorder.

12.6.9.1 A listed pressure recording device shall be installed to sense and record the pressure in each fire pump controller pressure-sensing line at the input to the controller.

12.6.9.2 The recorder shall be capable of operating for at least 7 days without being reset or rewound.

12.6.9.3 The pressure-sensing element of the recorder shall be capable of withstanding a momentary surge pressure of at least 400 psi (27.6 bar) or 133 percent of fire pump controller rated operating pressure, whichever is greater, without losing its accuracy.

12.6.9.4 The pressure-recording device shall be spring wound mechanically or driven by reliable electrical means.

12.6.9.5 The pressure-recording device shall not be solely dependent upon ac electric power.

12.6.9.6 Upon loss of ac electric power, the electric-driven recorder shall be capable of at least 24 hours of operation.

12.6.9.7 In a non-pressure-actuated controller, the pressure recorder shall not be required.

12.6.10 Fire Protection Equipment Control.

12.6.10.1 Where the pump supplies special water control equipment (e.g., deluge valves, dry-pipe valves), the engine shall be started before the pressure-actuated valve or switch would do so.

12.6.10.2 Under such conditions the controller shall be equipped to start the engine upon operation of the fire protection equipment.

12.6.11 Manual Control at Remote Station.

12.6.11.1 Additional control stations for causing nonautomatic, continuous operation of the pumping unit, independent of the pressure-actuated control valve or switch, could be provided at locations remote from the controller.

12.6.11.2 Such stations shall not be operable to stop the unit except through the established operation of the running period timer circuit when the controller is arranged for automatic shutdown. *(See 12.5.5.2.)*

12.6.12 External Circuits Connected to Controllers.

12.6.12.1 With pumping units operating singly or in parallel, the control conductors entering or leaving the fire pump controller that extend outside the fire pump room shall be arranged so as to prevent failure to start due to fault.

12.6.12.2 Breakage, disconnecting, shorting of wires, or loss of power to these circuits shall be permitted to cause continuous running of the fire pump but shall not prevent the controller(s) from starting the fire pump(s) due to causes other than these external circuits.

12.6.12.3 All control conductors within the fire pump room that are not fault tolerant shall be protected against mechanical injury.

12.6.12.4 When a diesel driver is used in conjunction with a positive displacement pump, the diesel controller shall provide a circuit and timer to activate and then close the dump valve after engine start is finished.

12.6.13 Sole Supply Pumps.

12.6.13.1 For sprinkler or standpipe systems where an automatically controlled pumping unit constitutes the sole supply, the controller shall be arranged for manual shutdown.

12.6.13.2 Manual shutdown shall also be provided where required by the authority having jurisdiction.

12.6.14 Manual Control at Controller.

12.6.14.1 There shall be a manually operated valve or switch on the controller panel.

12.6.14.2 This valve or switch shall be so arranged that operation of the engine, when manually started, cannot be affected by the pressure-actuated switch.

12.6.14.3 The arrangement shall also provide that the unit will remain in operation until manually shut down.

Copyright National Fire Protection Association
Provided by IHS under license with NFPA
No reproduction or networking permitted without license from IHS
Not for Resale

12.6.15 Starting Equipment Arrangement. The requirements for starting equipment arrangement shall be as follows:

(1) The air supply container, complying with the requirements of 11.2.5.4.4, shall be provided and so arranged that manual and automatic starting of the engine can be accomplished.
(2) In the event that the engine does not start after completion of its attempt-to-start cycle, the controller shall stop all further cranking and operate the audible and visible fire pump alarms.
(3) The attempt-to-start cycle shall be fixed and shall consist of one crank period of an approximately 90-second duration.

12.6.16 Manual Shutdown. Manual shutdown shall be accomplished by either of the following:

(1) Operation of a stop valve or switch on the controller panel
(2) Operation of a stop valve or switch on the outside of the controller enclosure

12.6.16.1 The stop valve shall cause engine shutdown through the automatic circuits only after starting causes have been returned to normal.

12.6.16.2 This action shall return the controller to full automatic position.

Chapter 13 Steam Turbine Drive

13.1 General.

13.1.1 Acceptability.

13.1.1.1 Steam turbines of adequate power are acceptable prime movers for driving fire pumps. Reliability of the turbines shall have been proved in commercial work.

13.1.1.2 The steam turbine shall be directly connected to the fire pump.

13.1.2 Turbine Capacity.

13.1.2.1 For steam boiler pressures not exceeding 120 psi (8.3 bar), the turbine shall be capable of driving the pump at its rated speed and maximum pump load with a pressure as low as 80 psi (5.5 bar) at the turbine throttle when exhausting against atmospheric back pressure with the hand valve open.

13.1.2.2 For steam boiler pressures exceeding 120 psi (8.3 bar), where steam is continuously maintained, a pressure 70 percent of the usual boiler pressure shall take the place of the 80 psi (5.5 bar) pressure required in 13.1.2.1.

13.1.2.3 In ordering turbines for stationary fire pumps, the purchaser shall specify the rated and maximum pump loads at rated speed, the rated speed, the boiler pressure, the steam pressure at the turbine throttle (if possible), and the steam superheat.

13.1.3* Steam Consumption.

13.1.3.1 Prime consideration shall be given to the selection of a turbine having a total steam consumption commensurate with the steam supply available.

13.1.3.2 Where multistage turbines are used, they shall be so designed that the pump can be brought up to speed without a warmup time requirement.

13.2 Turbine.

13.2.1 Casing and Other Parts.

13.2.1.1* The casing shall be designed to permit access with the least possible removal of parts or piping.

13.2.1.2 A safety valve shall be connected directly to the turbine casing to relieve high steam pressure in the casing.

13.2.1.3 Main Throttle Valve.

13.2.1.3.1 The main throttle valve shall be located in a horizontal run of pipe connected directly to the turbine.

13.2.1.3.2 There shall be a water leg on the supply side of the throttle valve.

13.2.1.3.3 This leg shall be connected to a suitable steam trap to automatically drain all condensate from the line supplying steam to the turbine.

13.2.1.3.4 Steam and exhaust chambers shall be equipped with suitable condensate drains.

13.2.1.3.5 Where the turbine is automatically controlled, these drains shall discharge through adequate traps.

13.2.1.3.6 In addition, if the exhaust pipe discharges vertically, there shall be an open drain at the bottom elbow.

13.2.1.3.7 This drain shall not be valved but shall discharge to a safe location.

13.2.1.4 The nozzle chamber, governor-valve body, pressure regulator, and other parts through which steam passes shall be made of a metal able to withstand the maximum temperatures involved.

13.2.2 Speed Governor.

13.2.2.1 The steam turbine shall be equipped with a speed governor set to maintain rated speed at maximum pump load.

13.2.2.2 The governor shall be capable of maintaining, at all loads, the rated speed within a total range of approximately 8 percent from no turbine load to full-rated turbine load, by either of the following methods:

(1) With normal steam pressure and with hand valve closed
(2) With steam pressures down to 80 psi (5.5 bar) [or down to 70 percent of full pressure where this is in excess of 120 psi (8.3 bar)] and with hand valve open

13.2.2.3 While the turbine is running at rated pump load, the speed governor shall be capable of adjustment to secure speeds of approximately 5 percent above and 5 percent below the rated speed of the pump.

13.2.2.4 There shall also be provided an independent emergency governing device.

13.2.2.5 The independent emergency governing device shall be arranged to shut off the steam supply at a turbine speed approximately 20 percent higher than the rated pump speed.

13.2.3 Gauge and Gauge Connections.

13.2.3.1 A listed steam pressure gauge shall be provided on the entrance side of the speed governor.

13.2.3.2 A 0.25 in. (6 mm) pipe tap for a gauge connection shall be provided on the nozzle chamber of the turbine.

Copyright National Fire Protection Association
Provided by IHS under license with NFPA
No reproduction or networking permitted without license from IHS
Not for Resale

13.2.3.3 The gauge shall indicate pressures not less than one and one-half times the boiler pressure, and in no case less than 240 psi (16.5 bar).

13.2.3.4 The gauge shall be marked "Steam."

13.2.4 Rotor.

13.2.4.1 The rotor of the turbine shall be of suitable material.

13.2.4.2 The first unit of a rotor design shall be type tested in the manufacturer's shop at 40 percent above rated speed.

13.2.4.3 All subsequent units of the same design shall be tested at 25 percent above rated speed.

13.2.5 Shaft.

13.2.5.1 The shaft of the turbine shall be of high-grade steel, such as open-hearth carbon steel or nickel steel.

13.2.5.2 Where the pump and turbine are assembled as independent units, a flexible coupling shall be provided between the two units.

13.2.5.3 Where an overhung rotor is used, the shaft for the combined unit shall be in one piece with only two bearings.

13.2.5.4 The critical speed of the shaft shall be well above the highest speed of the turbine so that the turbine will operate at all speeds up to 120 percent of rated speed without objectionable vibration.

13.2.6 Bearings.

13.2.6.1 Sleeve Bearings. Turbines having sleeve bearings shall have split-type bearing shells and caps.

13.2.6.2 Ball Bearings.

13.2.6.2.1 Turbines having ball bearings shall be acceptable after they have established a satisfactory record in the commercial field.

13.2.6.2.2 Means shall be provided to give visible indication of the oil level.

13.3* Installation. Details of steam supply, exhaust, and boiler feed shall be carefully planned to provide reliability and effective operation of a steam turbine–driven fire pump.

Chapter 14 Acceptance Testing, Performance, and Maintenance

14.1 Hydrostatic Tests and Flushing.

14.1.1 Flushing.

14.1.1.1 Suction piping shall be flushed at a flow rate not less than indicated in Table 14.1.1.1(a) and Table 14.1.1.1(b) or at the hydraulically calculated water demand rate of the system, whichever is greater.

14.1.1.2 Flushing shall occur prior to hydrostatic test.

14.1.2 Hydrostatic Test.

14.1.2.1 Suction and discharge piping shall be hydrostatically tested at not less than 200 psi (13.8 bar) pressure, or at 50 psi (3.4 bar) in excess of the maximum pressure to be maintained in the system, whichever is greater.

14.1.2.2 The pressure required in 14.1.2.1 shall be maintained for 2 hours.

Table 14.1.1.1(a) Flow Rates for Stationary Pumps

U.S. Customary Units		Metric Units	
Pipe Size (in.)	Flow Rate (gpm)	Pipe Size (mm)	Flow Rate (L/min)
4	590	100	2,233
5	920	125	3,482
6	1,360	150	5,148
8	2,350	200	8,895
10	3,670	250	13,891
12	5,290	300	20,023

Table 14.1.1.1(b) Flush Rates for Positive Displacement Pumps

U.S. Customary Units		Metric Units	
Pipe Size (in.)	Flow (gpm)	Pipe Size (mm)	Flow (L/min)
1½	100	40	378.50
2	250	50	945.25
3	400	80	1514.00
4	450	100	1703.25
6	500	150	1892.50

14.1.3* The installing contractor shall furnish a certificate for flushing and hydrostatic test prior to the start of the fire pump field acceptance test.

14.2 Field Acceptance Tests.

14.2.1 The pump manufacturer, the engine manufacturer (when supplied), the controller manufacturer, and the transfer switch manufacturer (when supplied) or their factory-authorized representatives shall be present for the field acceptance test. *(See Section 5.4.)*

14.2.2* All the authorities having jurisdiction shall be notified as to the time and place of the field acceptance test.

14.2.3 All electric wiring to the fire pump motor(s), including control (multiple pumps) interwiring, normal power supply, alternate power supply where provided, and jockey pump, shall be completed and checked by the electrical contractor prior to the initial startup and acceptance test.

14.2.4* Certified Pump Curve.

14.2.4.1 A copy of the manufacturer's certified pump test characteristic curve shall be available for comparison of the results of the field acceptance test.

14.2.4.2 The fire pump as installed shall equal the performance as indicated on the manufacturer's certified shop test characteristic curve within the accuracy limits of the test equipment.

14.2.5 The fire pump shall perform at minimum, rated, and peak loads without objectionable overheating of any component.

--`,,```,,,,````-`-`,,`,,`,`,,`---

Copyright National Fire Protection Association
Provided by IHS under license with NFPA
No reproduction or networking permitted without license from IHS
Not for Resale

14.2.6 Vibrations of the fire pump assembly shall not be of a magnitude to warrant potential damage to any fire pump component.

14.2.7* Field Acceptance Test Procedures.

14.2.7.1* Test Equipment.

14.2.7.1.1 Calibrated test equipment shall be provided to determine net pump pressures, rate of flow through the pump, volts and amperes for electric motor–driven pumps, and speed.

14.2.7.1.2 Calibrated test gauges shall be used and bear a label with the latest date of calibration. Gauges shall be calibrated a minimum of annually. Calibration of test gauges shall be maintained at an accuracy level of ± 1 percent.

14.2.7.2 Flow Tests.

14.2.7.2.1* The minimum, rated, and peak loads of the fire pump shall be determined by controlling the quantity of water discharged through approved test devices.

14.2.7.2.2 If available suction supplies do not permit the flowing of 150 percent of rated pump capacity, the fire pump shall be operated at maximum allowable discharge to determine its acceptance. This reduced capacity shall constitute an acceptable test, provided that the pump discharge exceeds the fire protection system design flow and pressure requirements.

14.2.7.2.3 The pump flow for positive displacement pumps shall be tested and determined to meet the specified rated performance criteria where only one performance point is required to establish positive displacement pump acceptability.

14.2.7.2.4 Where the suction to the fire pump is from a break tank, the tank refill rate shall be tested and recorded. The refill device shall be operated a minimum of five times.

14.2.7.3 Variable Speed Pressure Limiting Control.

14.2.7.3.1 Pumps with variable speed pressure limiting control shall be tested at minimum, rated, and peak loads, with both the variable speed pressure limiting control operational and the fire pump operating at rated speed.

14.2.7.3.2 The fire protection system shall be isolated and the pressure relief valve closed for the tests required in 14.2.7.3.1.

14.2.7.4* Measurement Procedure.

14.2.7.4.1 The quantity of water discharging from the fire pump assembly shall be determined and stabilized.

14.2.7.4.2 Immediately thereafter, the operating conditions of the fire pump and driver shall be measured.

14.2.7.4.3 Positive Displacement Pumps.

14.2.7.4.3.1 The pump flow test for positive displacement pumps shall be accomplished using a flow meter or orifice plate installed in a test loop back to the supply tank, inlet side of a positive displacement water pump, or to drain.

14.2.7.4.3.2 The flowmeter reading or discharge pressure shall be recorded and shall be in accordance with the pump manufacturer's flow performance data.

14.2.7.4.3.3 If orifice plates are used, the orifice size and corresponding discharge pressure to be maintained on the upstream side of the orifice plate shall be made available to the authority having jurisdiction.

14.2.7.4.3.4 Flow rates shall be as specified while operating at the system design pressure. Tests shall be performed in accordance with HI 3.6, *Rotary Pump Tests*.

14.2.7.4.3.5 Positive displacement pumps intended to pump liquids other than water shall be permitted to be tested with water; however, the pump performance will be affected, and manufacturer's calculations shall be provided showing the difference in viscosity between water and the system liquid.

14.2.7.4.4 For electric motors operating at rated voltage and frequency, the ampere demand on each phase shall not exceed the product of the full-load ampere rating times the allowable service factor as stamped on the motor nameplate.

14.2.7.4.5 For electric motors operating under varying voltage, the product of the actual voltage and current demand on each phase shall not exceed the product of the rated voltage and rated full-load current times the allowable service factor.

14.2.7.4.6 The voltage at the motor shall not vary more than 5 percent below or 10 percent above rated (nameplate) voltage during the test. *(See Section 9.4.)*

14.2.7.4.7 Engine-Driven Units.

14.2.7.4.7.1 When dry charge batteries have been supplied, electrolyte shall be added to the batteries a minimum of 24 hours prior to the time the engine is to be started and the batteries given a conditioning charge.

14.2.7.4.7.2 Engine-driven units shall not show signs of overload or stress.

14.2.7.4.7.3 The governor of such units shall be set at the time of the test to properly regulate the engine speed at rated pump speed. *(See 11.2.4.1.)*

14.2.7.4.7.4 Engines equipped with a variable speed pressure limiting control shall have the pressure-limiting control device nonfunctioning when the governor field adjustment in 11.2.4.1 is set and secured.

14.2.7.4.8 The steam turbine shall maintain its speed within the limits specified in 13.2.2.

14.2.7.4.9 The gear drive assembly shall operate without excessive objectionable noise, vibration, or heating.

14.2.7.5 Loads Start Test. The fire pump unit shall be started and brought up to rated speed without interruption under the conditions of a discharge equal to peak load.

14.2.7.6* Phase Reversal Test. For electric motors, a test shall be performed to ensure that there is not a phase reversal condition in either the normal power supply configuration or from the alternate power supply (where provided).

14.2.8 Controller Acceptance Test.

14.2.8.1* Fire pump controllers shall be tested in accordance with the manufacturer's recommended test procedure.

14.2.8.2 As a minimum, no fewer than six automatic and six manual operations shall be performed during the acceptance test.

14.2.8.3 A fire pump driver shall be operated for a period of at least 5 minutes at full speed during each of the operations required in 14.2.7.

14.2.8.4 An engine driver shall not be required to run for 5 minutes at full speed between successive starts until the cumulative cranking time of successive starts reaches 45 seconds.

14.2.8.5 The automatic operation sequence of the controller shall start the pump from all provided starting features.

Copyright National Fire Protection Association
Provided by IHS under license with NFPA
No reproduction or networking permitted without license from IHS
Not for Resale

14.2.8.6 This sequence shall include pressure switches or remote starting signals.

14.2.8.7 Tests of engine-driven controllers shall be divided between both sets of batteries.

14.2.8.8 The selection, size, and setting of all overcurrent protective devices, including fire pump controller circuit breaker, shall be confirmed to be in accordance with this standard.

14.2.8.9 The fire pump shall be started once from each power service and run for a minimum of 5 minutes.

CAUTION: Manual emergency operation shall be accomplished by a manual actuation of the emergency handle to the fully latched position in a continuous motion. The handle shall be latched for the duration of this test run.

14.2.9 Alternate Power Supply.

14.2.9.1 On installations with an alternate source of power and an automatic transfer switch, loss of primary source shall be simulated and transfer shall occur while the pump is operating at peak load.

14.2.9.2 Transfer from normal to alternate source and retransfer from alternate to normal source shall not cause opening of overcurrent protection devices in either line.

14.2.9.3 At least half of the manual and automatic operations of 14.2.8.2 shall be performed with the fire pump connected to the alternate source.

14.2.9.4 If the alternate power source is a generator set required by 9.3.2, installation acceptance shall be in accordance with NFPA 110, *Standard for Emergency and Standby Power Systems.*

14.2.10 Emergency Governor.

14.2.10.1 Emergency governor valve for steam shall be operated to demonstrate satisfactory performance of the assembly.

14.2.10.2 Hand tripping shall be acceptable.

14.2.11 Simulated Conditions. Both local and remote signals and fire pump alarm conditions shall be simulated to demonstrate satisfactory operation.

14.2.12 Test Duration. The fire pump or foam concentrate pump shall be in operation for not less than 1 hour total time during all of the foregoing tests.

14.2.13* Electronic Fuel Management (ECM). For engines with electronic fuel management (ECM) control systems, a function test of both the primary and alternate ECM shall be conducted.

14.3 Manuals, Special Tools, and Spare Parts.

14.3.1 A minimum of one set of instruction manuals for all major components of the fire pump system shall be supplied by the manufacturer of each major component.

14.3.2 The manual shall contain the following:

(1) A detailed explanation of the operation of the component
(2) Instructions for routine maintenance
(3) Detailed instructions concerning repairs
(4) Parts list and parts identification
(5) Schematic electrical drawings of controller, transfer switch, and fire pump control panels

14.3.3 Any special tools and testing devices required for routine maintenance shall be available for inspection by the authority having jurisdiction at the time of the field acceptance test.

14.3.4 Consideration shall be given to stocking spare parts for critical items not readily available.

14.4 Periodic Inspection, Testing, and Maintenance. Fire pumps shall be inspected, tested, and maintained in accordance with NFPA 25, *Standard for the Inspection, Testing, and Maintenance of Water-Based Fire Protection Systems.*

14.5 Component Replacement.

14.5.1 Positive Displacement Pumps.

14.5.1.1 Whenever a critical path component in a positive displacement fire pump is replaced, as defined in 14.5.2.4, a field test of the pump shall be performed.

14.5.1.2 If components that do not affect performance are replaced, such as shafts, then only a functional test shall be required to ensure proper installation and reassembly.

14.5.1.3 If components that affect performance are replaced, such as rotors, plungers, and so forth, then a retest shall be conducted by the pump manufacturer or designated representative or qualified persons acceptable to the authority having jurisdiction.

14.5.1.4 Field Retest Results.

14.5.1.4.1 The field retest results shall be compared to the original pump performance as indicated by the original factory-certified test curve, whenever it is available.

14.5.1.4.2 The field retest results shall meet or exceed the performance characteristics as indicated on the pump nameplate, and the results shall be within the accuracy limits of field testing as stated elsewhere in this standard.

14.5.2 Centrifugal Pumps.

14.5.2.1 Whenever a critical path component in a piece of centrifugal pump equipment is replaced, changed, or modified, a field/on-site retest shall be performed.

14.5.2.2 The replacement of components in fire pumps, fire pump controllers, and drivers shall be performed by factory-authorized representatives or qualified persons acceptable to the authority having jurisdiction.

14.5.2.3 Replacement Parts. Table 14.5.2.3 shall be used for component replacement testing requirements.

14.5.2.3.1 Replacement parts shall be provided that will maintain the listing for the fire pump component whenever possible.

14.5.2.3.2 If it is not possible to maintain the listing of a component or if the component was not originally listed for fire protection use, the replacement parts shall meet or exceed the quality of the parts being replaced.

14.5.2.4 Critical path components include the following features of the pump equipment:

(1) Fire pumps
    (a) Impeller, casing
    (b) Gear drives
(2) Fire pump controllers (electric or diesel): total replacement
(3) Electric motor, steam turbines, or diesel engine drivers
    (a) Electric motor replacement
    (b) Steam turbine replacement or rebuild
    (c) Steam regulator or source upgrade
    (d) Engine replacement or engine rebuild

Copyright National Fire Protection Association
Provided by IHS under license with NFPA
No reproduction or networking permitted without license from IHS
Not for Resale

Table 14.5.2.3 Summary of Component Replacement Testing Requirements

	Component	Adjust	Repair	Rebuild	Replace	Test Criteria
A. Fire Pump Systems						
1	Entire pump assembly				X	Perform acceptance test in accordance with NFPA 20, 14.5.2.6.2, 14.5.1.4
2	Impeller/rotating assembly		X		X	Perform acceptance test in accordance with NFPA 20, 14.5.2.6.2, 14.5.1.4
3	Casing		X		X	Perform acceptance test in accordance with NFPA 20, 14.5.2.6.2, 14.5.1.4
4	Bearings				X	Perform annual test in accordance with NFPA 25, 8.3.3 with alignment
5	Sleeves				X	Perform annual test in accordance with NFPA 25, 8.3.3 with alignment
6	Wear rings				X	Perform annual test in accordance with NFPA 25, 8.3.3 with alignment
7	Main shaft		X		X	Perform annual test in accordance with NFPA 25, 8.3.3 with alignment
8	Packing	X			X	Perform weekly test in accordance with NFPA 25, 8.3.2
B. Mechanical Transmission						
1	Gear right angle drives		X	X	X	Perform acceptance test in accordance with NFPA 20, 14.5.2.6.2
2	Drive coupling	X	X	X	X	Perform weekly test in accordance with NFPA 25, 8.3.2
C. Electrical System/Controller						
1	Entire controller		X	X	X	Perform acceptance test with NFPA 20, 14.2.8
2	Isolating switch				X	Perform acceptance test with NFPA 25, 8.3.2 and exercise six times
3	Circuit breaker	X				Perform six momentary starts in accordance with NFPA 20, 14.2.8.9
4	Circuit breaker				X	Perform a 1 hour full load current test
5	Electrical connections	X				Perform weekly test in accordance with NFPA 25, 8.3.2
6	Main contactor			X		Perform weekly test in accordance with NFPA 25, 8.3.2
7	Main contactor				X	Perform acceptance test in accordance with NFPA 20, 14.2.8
8	Power monitor				X	Perform weekly test in accordance with NFPA 25, 8.3.2
9	Start relay				X	Perform weekly test in accordance with NFPA 25, 8.3.2
10	Pressure switch	X			X	Perform acceptance test in accordance with NFPA 20, 14.2.8.9
11	Pressure transducer	X			X	Perform acceptance test in accordance with NFPA 20, 14.2.8.9
12	Manual start or stop switch				X	Perform six operations under load with NFPA 25, 8.3.2
13	Transfer switch — load carrying parts		X	X	X	Perform acceptance test and transfer from normal power to emergency power and back one time with NFPA 20, 14.5.2
14	Transfer switch — no load parts		X	X	X	Perform six no load operations of transfer of power with NFPA 20, 14.5.2.3
D. Electric Motor Driver						
1	Electric motor		X	X	X	Perform acceptance test in accordance with NFPA 20, 14.5.2.6.2, 14.5.2.5
2	Motor bearings				X	Perform annual test in accordance with NFPA 25, 8.3.3 with alignment
3	Incoming power conductors/disconnects				X	Perform acceptance test NFPA 20, 14.5.2

Copyright National Fire Protection Association
Provided by IHS under license with NFPA
No reproduction or networking permitted without license from IHS
Not for Resale

Table 14.5.2.3 *Continued*

	Component	Adjust	Repair	Rebuild	Replace	Test Criteria
E. Diesel Engine Driver						
1	Entire engine			X	X	Perform annual test in accordance with NFPA 25, 8.3.3, NFPA 20, 14.5.2.3.1
2	Fuel transfer pump	X		X	X	Perform weekly test in accordance with NFPA 25, 8.3.2
3	Fuel injector pump or ECM	X			X	Perform annual test in accordance with NFPA 25, 8.3.3
4	Fuel system filter		X		X	Perform weekly test in accordance with NFPA 25, 8.3.2
5	Combustion air intake system		X		X	Perform weekly test in accordance with NFPA 25, 8.3.2
6	Fuel tank		X		X	Perform weekly test in accordance with NFPA 25, 8.3.2
7	Cooling system		X	X	X	Perform weekly test in accordance with NFPA 25, 8.3.2
8	Batteries				X	Perform weekly test in accordance with NFPA 25, 8.3.2
9	Battery charger		X		X	Perform a start/stop sequence with NFPA 25, 8.3.2
10	Electrical system		X		X	Perform weekly test in accordance with NFPA 25, 8.3.2
11	Lubrication filter/oil service		X		X	Perform weekly test in accordance with NFPA 25, 8.3.2
F. Steam Turbines						
1	Steam turbine		X		X	Perform annual test in accordance with NFPA 25, 8.3.3
2	Steam regulator or source upgrade		X		X	Perform annual test in accordance with NFPA 20, 14.5.2.6.2
G. Positive Displacement Pumps						
1	Entire pump				X	Perform annual test in accordance with NFPA 20, 14.5.2.6.2
2	Rotors				X	Perform annual test in accordance with NFPA 25, 8.3.3
3	Plungers				X	Perform annual test in accordance with NFPA 25, 8.3.3
4	Shaft				X	Perform annual test in accordance with NFPA 25, 8.3.3
5	Driver		X	X	X	Perform annual test in accordance with NFPA 25, 8.3.3
6	Bearings				X	Perform weekly test in accordance with NFPA 25, 8.3.2
7	Seals				X	Perform weekly test in accordance with NFPA 25, 8.3.2
H. Pump House/Room and Misc Components						
1	Base plate		X		X	Perform weekly test in accordance with NFPA 25, 8.3.2 with alignment check
2	Foundation		X	X	X	Perform weekly test in accordance with NFPA 25, 8.3.2 with alignment check
3	Suction/discharge pipe		X		X	Hydrostatic test in accordance with NFPA 13, 24.2.1
4	Suction/discharge fittings		X		X	Hydrostatic test in accordance with NFPA 13, 24.2.1
5	Suction/discharge valves		X	X	X	Hydrostatic test in accordance with NFPA 13, 24.2.1

Copyright National Fire Protection Association
Provided by IHS under license with NFPA
No reproduction or networking permitted without license from IHS
Not for Resale

14.5.2.5 Whenever replacement, or change, or modification to a critical path component is performed on a fire pump, driver, or controller, as described in 14.5.2.4, a retest shall be conducted as indicated in Table 14.5.2.3 by the pump manufacturer, factory-authorized representative, or qualified persons acceptable to the authority having jurisdiction.

14.5.2.6 Field Retests.

14.5.2.6.1 The field retest results shall be compared to the original pump performance as indicated by the original factory-certified test curve, whenever it is available.

14.5.2.6.2 The field retest results shall meet or exceed the performance characteristics as indicated on the pump nameplate, and they shall be within the accuracy limits of field testing as stated elsewhere in this standard.

Annex A Explanatory Material

Annex A is not a part of the requirements of this NFPA document but is included for informational purposes only. This annex contains explanatory material, numbered to correspond with the applicable text paragraphs.

A.1.1 For more information, see NFPA 25, *Standard for the Inspection, Testing, and Maintenance of Water-Based Fire Protection Systems*, and NFPA 70, *National Electrical Code*, Article 695.

A.3.2.1 Approved. The National Fire Protection Association does not approve, inspect, or certify any installations, procedures, equipment, or materials; nor does it approve or evaluate testing laboratories. In determining the acceptability of installations, procedures, equipment, or materials, the authority having jurisdiction may base acceptance on compliance with NFPA or other appropriate standards. In the absence of such standards, said authority may require evidence of proper installation, procedure, or use. The authority having jurisdiction may also refer to the listings or labeling practices of an organization that is concerned with product evaluations and is thus in a position to determine compliance with appropriate standards for the current production of listed items.

A.3.2.2 Authority Having Jurisdiction (AHJ). The phrase "authority having jurisdiction," or its acronym AHJ, is used in NFPA documents in a broad manner, since jurisdictions and approval agencies vary, as do their responsibilities. Where public safety is primary, the authority having jurisdiction may be a federal, state, local, or other regional department or individual such as a fire chief; fire marshal; chief of a fire prevention bureau, labor department, or health department; building official; electrical inspector; or others having statutory authority. For insurance purposes, an insurance inspection department, rating bureau, or other insurance company representative may be the authority having jurisdiction. In many circumstances, the property owner or his or her designated agent assumes the role of the authority having jurisdiction; at government installations, the commanding officer or departmental official may be the authority having jurisdiction.

A.3.2.3 Listed. The means for identifying listed equipment may vary for each organization concerned with product evaluation; some organizations do not recognize equipment as listed unless it is also labeled. The authority having jurisdiction should utilize the system employed by the listing organization to identify a listed product.

A.3.3.23 Head. The unit for measuring head is the foot (meter). The relation between a pressure expressed in pounds per square inch (bar) and a pressure expressed in feet (meters) of head is expressed by the following formulas:

$$\text{Head in feet} = \frac{\text{Pressure in psi}}{0.433 \text{ specific gravity}}$$

$$\text{Head in meters} = \frac{\text{Pressure in bar}}{0.098 \text{ specific gravity}}$$

In terms of foot-pounds (meter-kilograms) of energy per pound (kilogram) of water, all head quantities have the dimensions of feet (meters) of water. All pressure readings are converted into feet (meters) of the water being pumped. *(See Figure A.3.3.23.)*

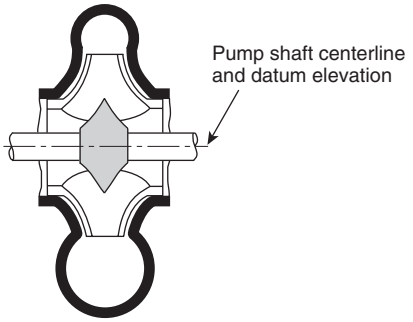

Horizontal double-suction pump

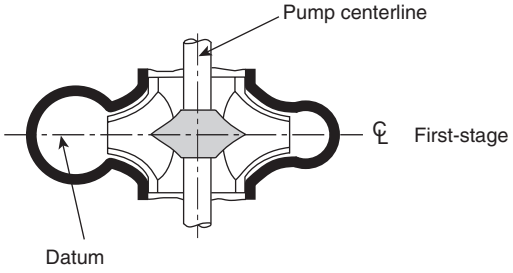

Vertical double-suction pump

Notes:
(1) For all types of horizontal shaft pumps (single-stage double-suction pump shown). Datum is same for multistage, single- (end) suction ANSI-type or any pump with a horizontal shaft.
(2) For all types of vertical shaft pumps (single-stage vertical double-suction pump shown). Datum is same for single- (end) suction, in-line, or any pump with a vertical shaft.

FIGURE A.3.3.23 Datum Elevation of Two Stationary Pump Designs.

A.3.3.23.3.1 Total Head (*H*), Horizontal Pumps. See Figure A.3.3.23.3.1. (Figure A.3.3.23.3.1 does not show the various types of pumps applicable.)

A.3.3.23.3.2 Total Head (*H*), Vertical Turbine Pumps. See Figure A.3.3.23.3.2.

Copyright National Fire Protection Association
Provided by IHS under license with NFPA
No reproduction or networking permitted without license from IHS
Not for Resale

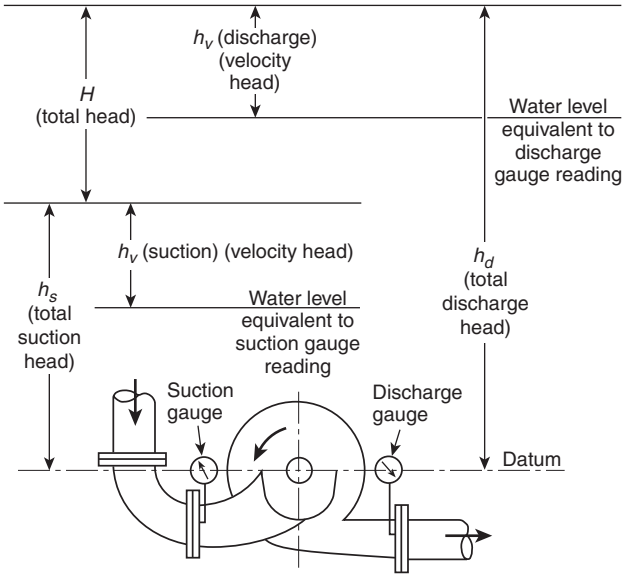

Note: Installation with suction head above atmospheric pressure shown.

FIGURE A.3.3.23.3.1 Total Head of All Types of Stationary (Not Vertical Turbine–Type) Fire Pumps.

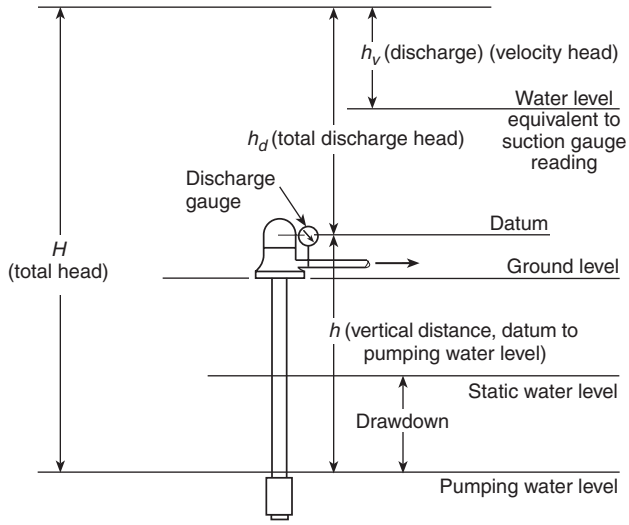

FIGURE A.3.3.23.3.2 Total Head of Vertical Turbine–Type Fire Pumps.

A.3.3.23.6 Velocity Head (h_v). Velocity head is expressed by the following formula:

$$h_v = \frac{v^2}{2g}$$

where:

v = velocity in the pipe in feet per second (meters per second)

g = the acceleration due to gravity, which is 32.17 ft/sec^2 (9.807 m/sec^2) at sea level and 45 degrees latitude

A.3.3.40 Service. For more information, see NFPA 70, *National Electrical Code*, Article 100.

A.3.3.41 Service Equipment. For more information, see NFPA 70, *National Electrical Code*, Article 100.

A.3.3.44 Signal. A response to signals is expected within 2 hours.

A.5.2 Because of the unique nature of fire pump units, the approval should be obtained prior to the assembly of any specific component.

A.5.4.1 A single entity should be designated as having unit responsibility for the pump, driver, controller, transfer switch equipment, and accessories. *Unit responsibility* means the accountability to answer and resolve any and all problems regarding the proper installation, compatibility, performance, and acceptance of the equipment. Unit responsibility should not be construed to mean purchase of all components from a single supplier.

A.5.6.1 For water supply capacity and pressure requirements, see the following documents:

(1) NFPA 13, *Standard for the Installation of Sprinkler Systems*
(2) NFPA 14, *Standard for the Installation of Standpipe and Hose Systems*
(3) NFPA 15, *Standard for Water Spray Fixed Systems for Fire Protection*
(4) NFPA 16, *Standard for the Installation of Foam-Water Sprinkler and Foam-Water Spray Systems*
(5) NFPA 24, *Standard for the Installation of Private Fire Service Mains and Their Appurtenances*

A.5.6.2 Where the suction supply is from a factory-use water system, pump operation at 150 percent of rated capacity should not create hazardous process upsets due to low water pressure.

A.5.6.4 Water sources containing salt or other materials deleterious to the fire protection systems should be avoided.

Where the authority having jurisdiction approves the start of an engine-driven fire pump on loss of ac power supply, the liquid supply should be sufficient to meet the additional cooling water demand.

A.5.7.1 This section does not preclude the use of pumps in public and private water supplies that provide water for domestic, process, and fire protection purposes. Such pumps are not fire pumps and are not expected to meet all of the requirements of NFPA 20. Such pumps are permitted for fire protection if they are considered reliable by the analysis mandated in Section 5.6. Evaluating the reliability should include at least the level of supervision and rapid response to problems as is typical in municipal water systems.

If a private development (campus) needs a fire protection pump, this is typically accomplished by installing a dedicated fire pump (in accordance with NFPA 20) in parallel with a domestic pump or as part of a dedicated fire branch/loop off of a water supply.

A.5.7.3 This is not intended to require replacement of dual driver installations made prior to the adoption of the 1974 edition of this standard.

Copyright National Fire Protection Association
Provided by IHS under license with NFPA
No reproduction or networking permitted without license from IHS
Not for Resale

A.5.7.6 It is poor design practice to overdesign the fire pump and driver and then count on the pressure relief valve to open and relieve the excess pressure. A pressure relief valve is not an acceptable method of reducing system pressure under normal operating conditions.

A.5.7.6.2 It is not the intent to restrict the use of pressure reducing valves downstream of the discharge isolation valve for the purpose of meeting the requirements of 5.7.6.

A.5.7.6.3.2 This requirement is intended to take into consideration the set pressure tolerance performance of the variable speed pressure limiting control as stated by the manufacturer.

A.5.8 The performance of the pump when applied at capacities over 140 percent of rated capacity can be adversely affected by the suction conditions. Application of the pump at capacities less than 90 percent of the rated capacity is not recommended.

The selection and application of the fire pump should not be confused with pump operating conditions. With proper suction conditions, the pump can operate at any point on its characteristic curve from shutoff to 150 percent of its rated capacity.

A.5.8.2 In countries utilizing the metric system, there do not appear to be standardized flow ratings for pump capacities; therefore, a soft metric conversion is utilized.

A.5.10.2 For protection against damage from overpressure, where desired, a gauge protector should be installed.

A.5.12 Special consideration needs to be given to fire pump installations installed below grade. Light, heat, drainage, and ventilation are several of the variables that need to be addressed. Some locations or installations might not require a pump house. Where a pump room or pump house is required, it should be of ample size and located to permit short and properly arranged piping. The suction piping should receive first consideration. The pump house should preferably be a detached building of noncombustible construction. A one-story pump room with a combustible roof, either detached or well cut off from an adjoining one-story building, is acceptable if sprinklered. Where a detached building is not feasible, the pump room should be located and constructed so as to protect the pump unit and controls from falling floors or machinery and from fire that could drive away the pump operator or damage the pump unit or controls. Access to the pump room should be provided from outside the building. Where the use of brick or reinforced concrete is not feasible, metal lath and plaster is recommended for the construction of the pump room. The pump room or pump house should not be used for storage purposes. Vertical shaft turbine–type pumps might necessitate a removable panel in the pump house roof to permit the pump to be removed for inspection or repair. Proper clearances to equipment should be provided as recommended by the manufacturer's drawings.

A.5.12.1 A fire pump that is inoperative for any reason at any time constitutes an impairment to the fire protection system. It should be returned to service without delay.

Rain and intense heat from the sun are adverse conditions to equipment not installed in a completely protective enclosure. At a minimum, equipment installed outdoors should be shielded by a roof or deck.

A.5.12.1.1 Most fire departments have procedures requiring operation of a fire pump unit during an incident. Building designers should locate the fire pump room to be easily accessible during an incident.

A.5.12.1.1.1 Equipment that increases the fire hazard (such as boilers) and is not related to fire protection systems should not be in a fire pump room.

A.5.12.6 Pump rooms and pump houses should be dry and free of condensate. To accomplish a dry environment, heat might be necessary.

A.5.13.1 The exterior of aboveground steel piping should be kept painted.

A.5.13.2 Flanges welded to pipe are preferred.

A.5.13.4 When welding is performed on the pump suction or discharge piping with the pump in place, the welding ground should be on the same side of the pump as the welding.

A.5.14.1 The exterior of steel suction piping should be kept painted.

Buried iron or steel pipe should be lined and coated or protected against corrosion in conformance with AWWA C104, *Cement-Mortar Lining for Cast-Iron and Ductile-Iron Pipe and Fittings for Water,* or equivalent standards.

A.5.14.4 The following notes apply to Figure A.5.14.4:

(1) A jockey pump is usually required with automatically controlled pumps.
(2) If testing facilities are to be provided, also see Figure A.5.19.1.2(a) and Figure A.5.19.1.2(b).
(3) Pressure-sensing lines also need to be installed in accordance with 10.5.2.1 or 12.5.2.1. See Figure A.10.5.2.1(a) and Figure A.10.5.2.1(b).

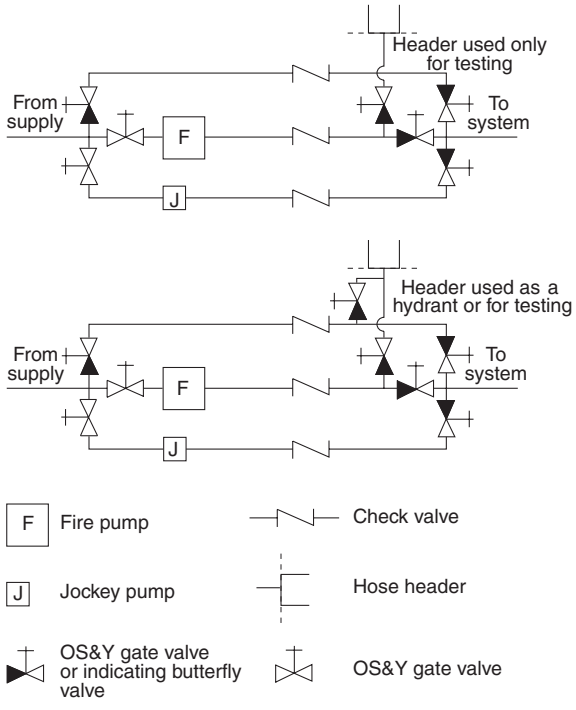

FIGURE A.5.14.4 Schematic Diagram of Suggested Arrangements for a Fire Pump with a Bypass, Taking Suction from Public Mains.

Copyright National Fire Protection Association
Provided by IHS under license with NFPA
No reproduction or networking permitted without license from IHS
Not for Resale

A.5.14.5 Where the suction supply is from public water mains, the gate valve should be located as far as is practical from the suction flange on the pump. Where it comes from a stored water container, the gate valve should be located at the outlet of the container. A butterfly valve on the suction side of the pump can create turbulence that adversely affects the pump performance and can increase the possibility of blockage of the pipe.

A.5.14.6 See Figure A.5.14.6. *(See Hydraulics Institute Standards for Centrifugal, Rotary and Reciprocating Pumps for additional information.)*

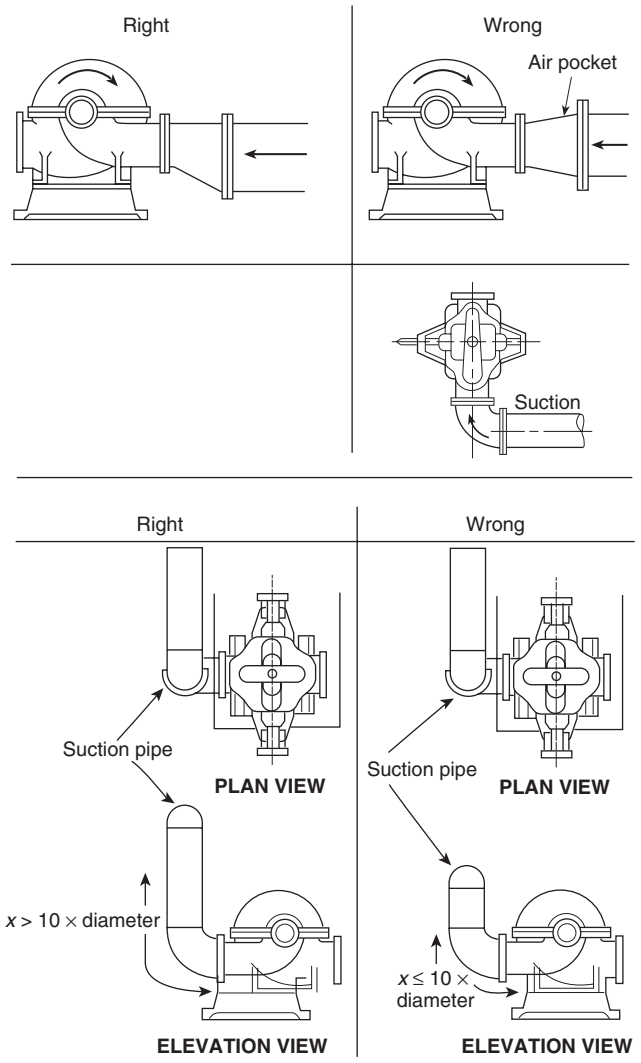

FIGURE A.5.14.6 Right and Wrong Pump Suctions.

A.5.14.8 When selecting screen material, consideration should be given to prevention of fouling from aquatic growth. Antifouling is best accomplished with brass or copper wire.

A.5.14.9 The term *device* as used in this subsection is intended to include, but not be limited to, devices that sense suction pressure and then restrict or stop the fire pump discharge. Due to the pressure losses and the potential for interruption of the flow to the fire protection systems, the use of backflow prevention devices is discouraged in fire pump piping. Where required, however, the placement of such a device on the discharge side of the pump is to ensure acceptable flow characteristics to the pump suction. It is more efficient to lose the pressure after the pump has boosted it, rather than before the pump has boosted it. Where the backflow preventer is on the discharge side of the pump and a jockey pump is installed, the jockey pump discharge and sensing lines need to be located so that a cross-connection is not created through the jockey pump.

A.5.14.10 For more information, see the *Hydraulics Institute Standards for Centrifugal, Rotary and Reciprocating Pumps.*

A.5.15.3 Flanges welded to the pipe are preferred.

A.5.15.5 The discharge pipe size should be such that, with the pump(s) operating at 150 percent of rated capacity, the velocity in the discharge pipe does not exceed 20 ft/sec (6.1 m/sec).

A.5.15.6 Large fire protection systems sometimes experience severe water hammer caused by backflow when the automatic control shuts down the fire pump. Where conditions can be expected to cause objectionable water hammer, a listed anti-water-hammer check valve should be installed in the discharge line of the fire pump. Automatically controlled pumps in tall buildings could give trouble from water hammer as the pump is shutting down.

Where a backflow preventer is substituted for the discharge check valve, an additional backflow preventer might be necessary in the bypass piping to prevent backflow through the bypass.

Where a backflow preventer is substituted for the discharge check valve, the connection for the sensing line is permitted to be between the last check valve and the last control valve if the pressure-sensing line connection can be made without altering the backflow valve or violating its listing. This method can sometimes be done by adding a connection through the test port on the backflow valve. In this situation, the discharge control valve is not necessary, since the last control valve on the backflow preventer serves this function.

Where a backflow preventer is substituted for the discharge check valve and the connection of the sensing line cannot be made within the backflow preventer, the sensing line should be connected between the backflow preventer and the pump's discharge control valve. In this situation, the backflow preventer cannot substitute for the discharge control valve because the sensing line must be able to be isolated.

A.5.16 Isolation valves and control valves are considered to be identical when used in conjunction with a backflow prevention assembly.

A.5.17 Pipe breakage caused by movement can be greatly lessened and, in many cases, prevented by increasing flexibility between major parts of the piping. One part of the piping should never be held rigidly and another free to move, without provisions for relieving the strain. Flexibility can be provided by the use of flexible couplings at critical points and by allowing clearances at walls and floors. Fire pump suction and discharge pipes should be treated the same as sprinkler risers for whatever portion is within a building. *(See* NFPA 13, *Standard for the Installation of Sprinkler Systems.)*

Holes through pump room fire walls should be packed with mineral wool or other suitable material held in place by pipe collars on each side of the wall. Pipes passing through foundation walls or pit walls into ground should have clearance from these walls, but holes should be watertight. Space around pipes passing through pump room walls or pump house floors can be filled with asphalt mastic.

Copyright National Fire Protection Association
Provided by IHS under license with NFPA
No reproduction or networking permitted without license from IHS
Not for Resale

A.5.18.1 The pressure is required to be evaluated at 121 percent of the net rated shutoff pressure because the pressure is proportional to the square of the speed that the pump is turned. A diesel engine governor is required to be capable of limiting the maximum engine speed to 110 percent, creating a pressure of 121 percent. Since the only time that a pressure relief valve is required by the standard to be installed is when the diesel engine is turning faster than normal, and since this is a relatively rare event, it is permitted for the discharge from the pressure relief valve to be piped back to the suction side of the pump.

A.5.18.1.2 In situations where the required system pressure is close to the pressure rating of the system components and the water supply pressure varies significantly over time, to eliminate system overpressurization, it might be necessary to use one of the following:

(1) A tank between the water supply and the pump suction, in lieu of directly connecting to the water supply piping
(2) A variable speed pressure limiting control device

A.5.18.2.1 See Figure A.5.18.2.1.

SAMPLE PRESSURE RELIEF VALVE CALCULATION
DISCHARGE TO ATMOSPHERE

Pressure rating of the system components				175
Maximum pump overspeed				105%
Pump size				1500
Rated pump pressure				100
			Maximum Pressure Static or Pump Overspeed	**Normal Static or Rated Speed**
Pump net pressure			112.5	102
Pump net churn pressure			132.3	120
Pump net pressure @ 150% of rated flow			71.7	65
Static pressure at pump suction			60	57
Available flow at pump suction			1320	1320
Residual pressure at pump suction			50	47
Maximum pump discharge pressure at churn			192.3	177.0
Pump flow rate at which the maximum discharge pressure does not exceed the pressure rating of the system components			1068.0	340.0
Estimated flow rate through the pressure relief valve			1795.5	1725.3
Pump discharge pressure at estimated flow			114.2	105.7
Pressure relief valve size				4
Pressure relief valve pipe size				4.026
Nozzle (pipe) discharge coefficient				0.9
C factor				120
Pressure relief valve Cv				240
Pressure Relief Valve Fittings	**Type Fitting**	**Number**	**Equiv Length**	**Total Equiv Length**
	45°	1	4	4
	ELLs	2	10	20
	LRE	0	6	0
Pressure relief valve pipe length				30
Total equivalent length				54
Calculated Results			**Maximum**	**Normal**
Friction loss per foot in pipe at estimated flow			0.7641	0.7098
Total loss in pressure relief valve piping			41.3	38.3
Friction loss in pressure relief valve at estimated flow			56.0	51.7
Pressure at pressure relief valve discharge			17.0	15.7
Elevation difference			0	0
Calculated discharge flow out of wide open pressure relief valve			1795	1726

FIGURE A.5.18.2.1 Sample Pressure Relief Valve Calculation.

Copyright National Fire Protection Association
Provided by IHS under license with NFPA
No reproduction or networking permitted without license from IHS
Not for Resale

A.5.18.5 The relief valve cone should be piped to a point where water can be freely discharged, preferably outside the building. If the relief valve discharge pipe is connected to an underground drain, care should be taken that no steam drains enter near enough to work back through the cone and into the pump room.

A.5.18.7 Where the relief valve discharges back to the source of supply, the back pressure capabilities and limitations of the valve to be used should be determined. It might be necessary to increase the size of the relief valve and piping above the minimum to obtain adequate relief capacity due to back pressure restriction.

A.5.18.8 When discharge enters the reservoir below minimum water level, there is not likely to be an air problem. If it enters over the top of the reservoir, the air problem is reduced by extending the discharge to below the normal water level.

A.5.19.1.1 The two objectives of running a pump test are to make sure that the pump itself is still functioning properly and to make sure that the water supply can still deliver the correct amount of water to the pump at the correct pressure. Some arrangements of test equipment do not permit the water supply to be tested. Every fire pump installation needs to have at least one arrangement of test equipment where the water supply can be tested. Inspection, testing, and maintenance standards (NFPA 25, *Standard for the Inspection, Testing, and Maintenance of Water-Based Fire Protection Systems*) require the pump test to be run at least once every three years using a method that tests the water supply's ability to provide water to the pump.

A.5.19.1.2 Outlets can be provided through the use of standard test headers, yard hydrants, wall hydrants, or standpipe hose valves.

The following notes apply to Figure A.5.19.1.2(a) and Figure A.5.19.1.2(b):

(1) The distance from the flowmeter to either isolation valve should be as recommended by the meter manufacturer.
(2) There should be a distance of not less than 5 diameters of suction pipe for top or bottom suction connection to the fire pump suction flange. There should be a distance of not less than 10 diameters of suction pipe for side connection (not recommended) to the fire pump suction flange.
(3) Automatic air release should be provided if piping forms an inverted "U," trapping air.
(4) The fire protection system should have outlets available to test the fire pump and suction supply piping. *(See A.5.19.3.1.)*
(5) The closed loop meter arrangement will test only net pump performance. It does not test the condition of the suction supply, valves, piping, and so forth.
(6) Return piping should be so arranged that no air can be trapped that would eventually end up in the eye of the pump impeller.
(7) Turbulence in the water entering the pump should be avoided to eliminate cavitation, which would reduce pump discharge and damage the pump impeller. For this reason, side connection is not recommended.
(8) Prolonged recirculation can cause damaging heat buildup, unless some water is wasted.
(9) Flowmeter should be installed according to manufacturer's instructions.
(10) Pressure-sensing lines also need to be installed in accordance with 10.5.2.1. *[See Figure A.10.5.2.1(a) and Figure A.10.5.2.1(b).]*

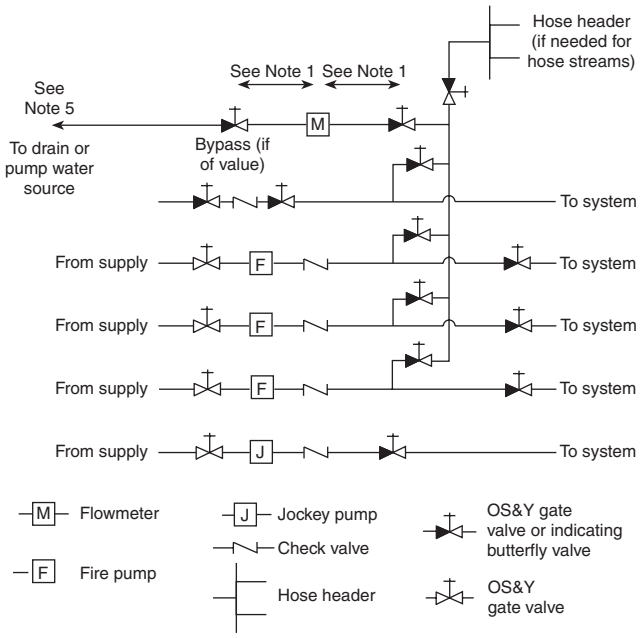

FIGURE A.5.19.1.2(a) Preferred Arrangement for Measuring Fire Pump Water Flow with Meter for Multiple Pumps and Water Supplies. Water is permitted to discharge to a drain or to the fire pump water source. ***(See the text for information on the notes.)***

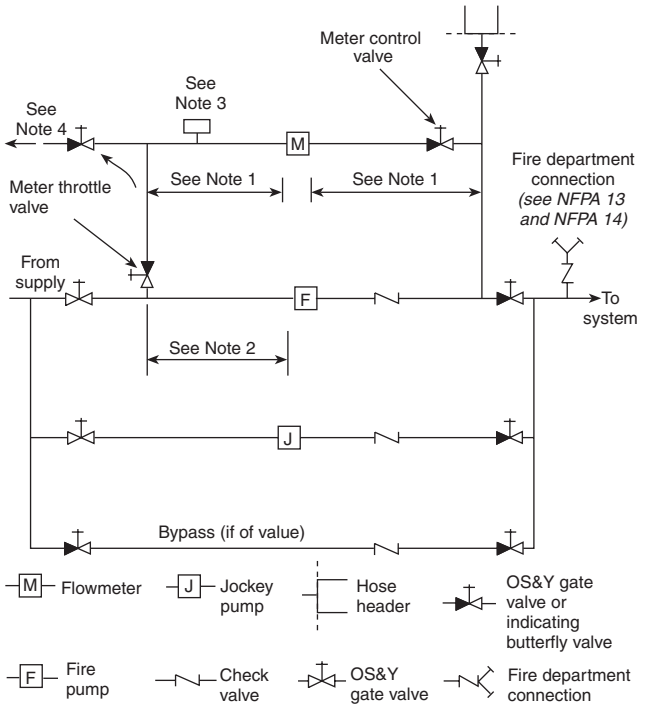

FIGURE A.5.19.1.2(b) Typical Arrangement for Measuring Fire Pump Water Flow with Meter. Discharge from the flowmeter is recirculated to the fire pump suction line. ***(See the text for information on the notes.)***

Copyright National Fire Protection Association
Provided by IHS under license with NFPA
No reproduction or networking permitted without license from IHS
Not for Resale

A.5.19.2.1.1 Metering devices should discharge to drain.

In the case of a limited water supply, the discharge should be back to the water source (e.g., suction tank, small pond). If this discharge enters the source below minimum water level, it is not likely to create an air problem for the pump suction. If it enters over the top of the source, the air problem is reduced by extending the discharge to below the normal water level.

A.5.19.3.1 The hose valves should be attached to a header or manifold and connected by suitable piping to the pump discharge piping. The connection point should be between the discharge check valve and the discharge gate valve. Hose valves should be located to avoid any possible water damage to the pump driver or controller, and they should be outside the pump room or pump house. If there are other adequate pump testing facilities, the hose valve header can be omitted when its main function is to provide a method of pump and suction supply testing. Where the hose header also serves as the equivalent of a yard hydrant, this omission should not reduce the number of hose valves to less than two.

A.5.19.3.4(2) See Figure A.5.19.3.4(2).

A.5.22 Pumps are designated as having right-hand, or clockwise (CW), rotation or left-hand, or counterclockwise (CCW), rotation. Diesel engines are commonly stocked and supplied with clockwise rotation.

Pump shaft rotation can be determined as follows:

(1) *Horizontal Pump Shaft Rotation*. The rotation of a horizontal pump can be determined by standing at the driver end and facing the pump. *[See Figure A.5.22(a).]* If the top of the shaft revolves from the left to the right, the rotation is right-handed, or clockwise (CW). If the top of the shaft revolves from right to left, the rotation is left-handed, or counterclockwise (CCW).

SAMPLE PUMP TEST HEADER SIZE CALCULATION

Pump size			1500		
Number of test hose streams			6		
Size of hose			2½		
Feet of hose per test hose			50		
Nozzle size			1.75		
Nozzle coefficient			0.97		
Pump test header pipe size			8.071		
C factor			120		
Pump Test Header Pipe Fittings	**Type Fitting**	**Number**	**Equiv Length**	**Total Equiv Length**	
	45°	1	9	9	
	E	1	18	18	
	LRE	0	13	0	
	T	1	35	35	
	BV	0	12	0	
	GV	1	4	4	
	SW	1	45	45	
Pump test header pipe length				30	
Total equivalent length				141	
Maximum test flow				2250	
Friction loss per ft in pipe				0.0392	
Total loss in pump test header pipe					5.5
Flow in each hose				375	
Friction loss in 100 ft of hose				28.125	
Total friction loss in hose					14.1
Equivalent pipe length 2½ in. valve				7	
Friction loss in 2½ in. pipe				0.4561	
Friction loss through 2½ in. valve					3.2
Required pitot pressure					18
Elevation difference					0
Required pump discharge					40.8

FIGURE A.5.19.3.4(2) Sample Pump Test Header Calculation.

Copyright National Fire Protection Association
Provided by IHS under license with NFPA
No reproduction or networking permitted without license from IHS
Not for Resale

(2) *Vertical Pump Shaft Rotation.* The rotation of a vertical pump can be determined by looking down on the top of the pump. If the point of the shaft directly opposite revolves from left to right, the rotation is right-handed, or clockwise (CW). *[See Figure A.5.22(b).]* If the point of the shaft directly opposite revolves from right to left, the rotation is left-handed, or counterclockwise (CCW).

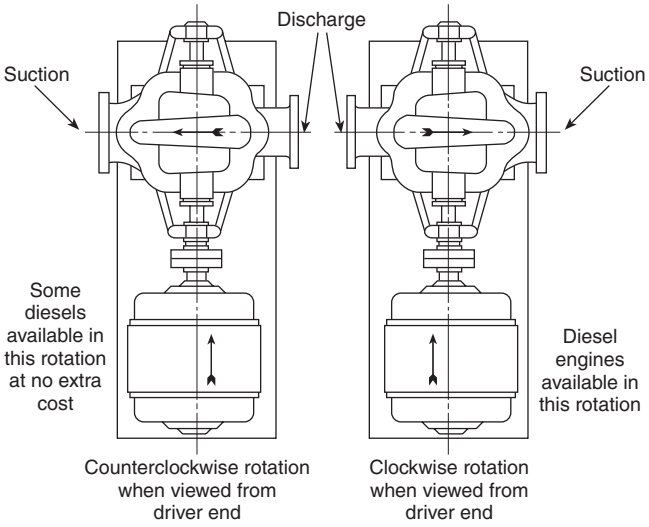

FIGURE A.5.22(a) Horizontal Pump Shaft Rotation.

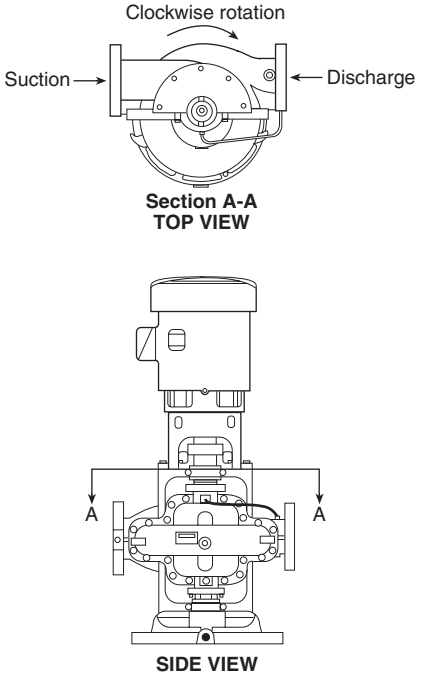

FIGURE A.5.22(b) Vertical Pump Shaft Rotation.

A.5.23 In addition to those conditions that require signals for pump controllers and engines, there are other conditions for which such signals might be recommended, depending upon local conditions. Some of these conditions are as follows:

(1) Low pump room temperature
(2) Relief valve discharge
(3) Flowmeter left on, bypassing the pump
(4) Water level in suction supply below normal
(5) Water level in suction supply near depletion
(6) Steam pressure below normal

Such additional signals can be incorporated into the trouble signals already provided on the controller, or they can be independent.

A.5.24 Pressure maintenance (jockey or make-up) pumps should be used where it is desirable to maintain a uniform or relatively high pressure on the fire protection system. A jockey pump should be sized to make up the allowable leakage rate within 10 minutes or 1 gpm (3.8 L/min), whichever is larger.

A domestic water pump in a dual-purpose water supply system can function as a means of maintaining pressure.

A.5.24.4 See Figure A.5.24.4.

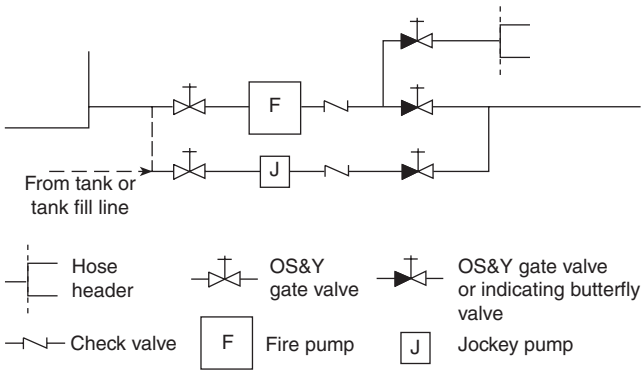

FIGURE A.5.24.4 Jockey Pump Installation with Fire Pump.

A.5.24.5 A centrifugal-type pressure maintenance pump is preferable.

The following notes apply to a centrifugal-type pressure maintenance pump:

(1) A jockey pump is usually required with automatically controlled pumps.
(2) Jockey pump suction can come from the tank filling supply line. This situation would allow high pressure to be maintained on the fire protection system even when the supply tank is empty for repairs.
(3) Pressure-sensing lines also need to be installed in accordance with 10.5.2.1. *[See Figure A.10.5.2.1(a) and Figure A.10.5.2.1(b).]*

A.5.27.1 NFPA 13, *Standard for the Installation of Sprinkler Systems*, contains specific guidance for seismic design of fire protection systems. Tables are available to determine the relative strength of many common bracing materials and fasteners.

A.6.1.1 See Figure A.6.1.1(a) through Figure A.6.1.1(h).

A.6.1.2 The centrifugal pump is particularly suited to boost the pressure from a public or private supply or to pump from a storage tank where there is a positive static head.

Copyright National Fire Protection Association
Provided by IHS under license with NFPA
No reproduction or networking permitted without license from IHS
Not for Resale

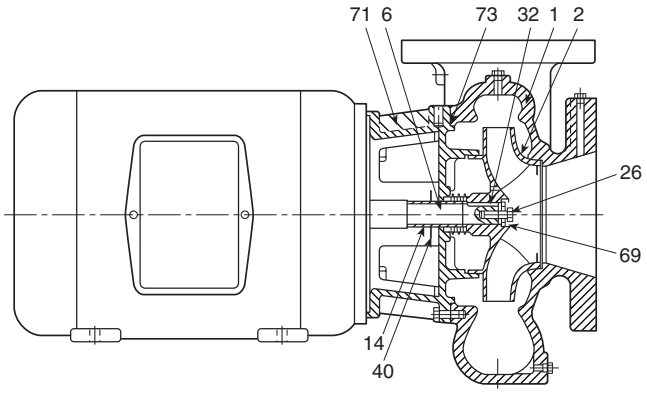

1 Casing
2 Impeller
6 Shaft
14 Sleeve, shaft
26 Screw, impeller
32 Key, impeller
40 Deflector
69 Lockwasher
71 Adapter
73 Gasket

FIGURE A.6.1.1(a) Overhung Impeller — Close Coupled Single Stage — End Suction.

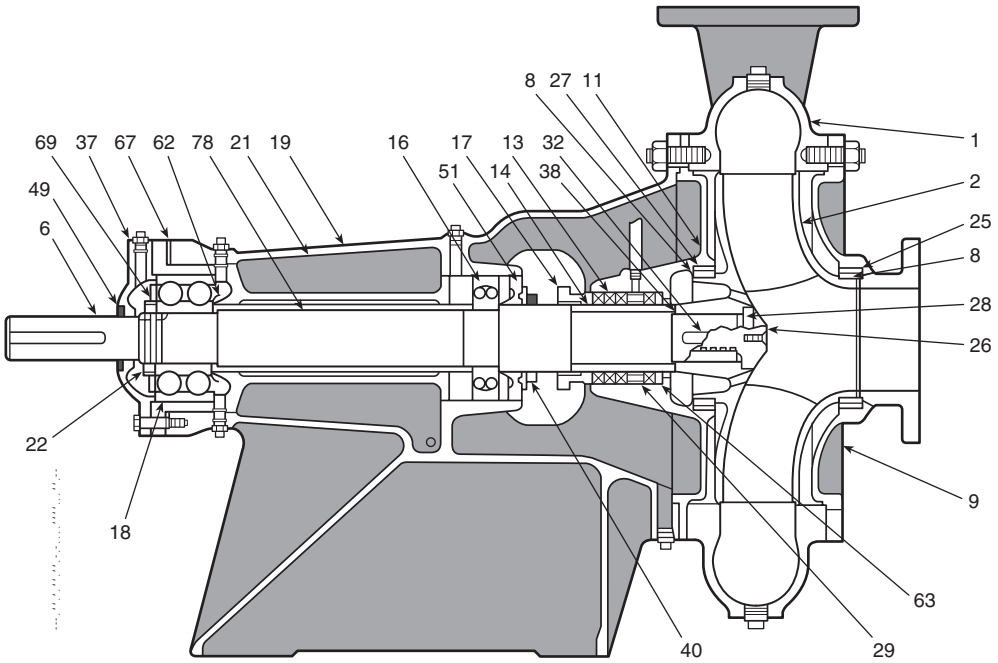

1 Casing
2 Impeller
6 Shaft, pump
8 Ring, impeller
9 Cover, suction
11 Cover, stuffing-box
13 Packing
14 Sleeve, shaft
16 Bearing, inboard
17 Gland
18 Bearing, outboard
19 Frame
21 Liner, frame
22 Locknut, bearing
25 Ring, suction cover
26 Screw, impeller
27 Ring, stuffing-box cover
28 Gasket
29 Ring, lantern
32 Key, impeller
37 Cover, bearing, outboard
38 Gasket, shaft sleeve
40 Deflector
49 Seal, bearing cover, outboard
51 Retainer, grease
62 Thrower (oil or grease)
63 Busing, stuffing-box
67 Shim, frame liner
69 Lockwasher
78 Spacer, bearing

FIGURE A.6.1.1(b) Overhung Impeller — Separately Coupled Single Stage — Frame Mounted.

Copyright National Fire Protection Association
Provided by IHS under license with NFPA
No reproduction or networking permitted without license from IHS
Not for Resale

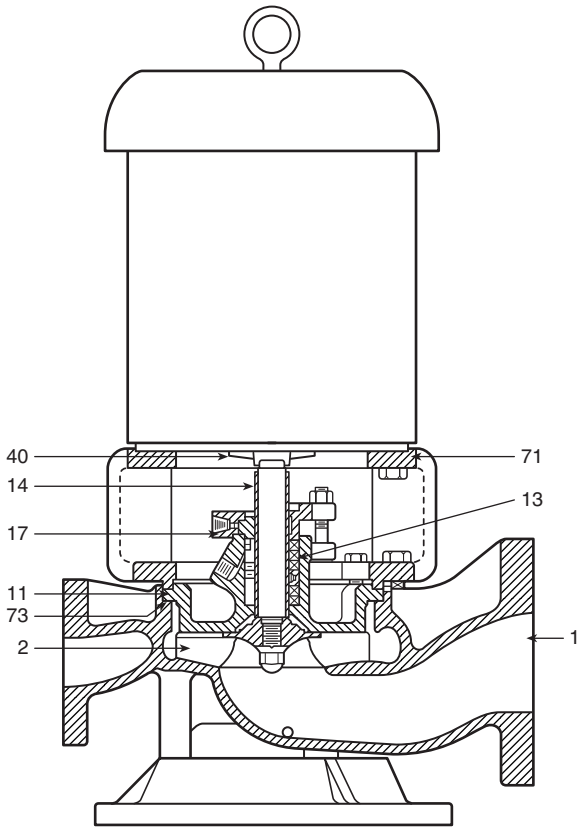

1 Casing
2 Impeller
11 Cover, seal chamber
13 Packing
14 Sleeve, shaft
17 Gland, packing
40 Deflector
71 Adapter
73 Gasket, casing

FIGURE A.6.1.1(c) Overhung Impeller — Close Coupled Single Stage — In-Line (Showing Seal and Packaging).

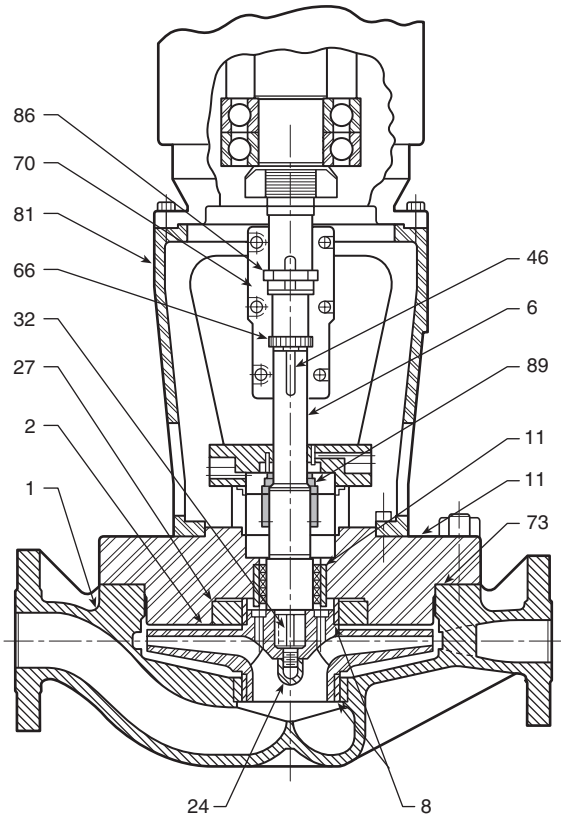

1 Casing
2 Impeller
6 Shaft, pump
8 Ring, impeller
11 Cover, seal chamber
24 Nut, impeller
27 Ring, stuffing-box cover
32 Key, impeller
46 Key, coupling
66 Nut, shaft adjusting
70 Coupling, shaft
73 Gasket
81 Pedestal, driver
86 Ring, thrust, split
89 Seal

FIGURE A.6.1.1(d) Overhung Impeller — Separately Coupled Single Stage — In-Line — Rigid Coupling.

Copyright National Fire Protection Association
Provided by IHS under license with NFPA
No reproduction or networking permitted without license from IHS
Not for Resale

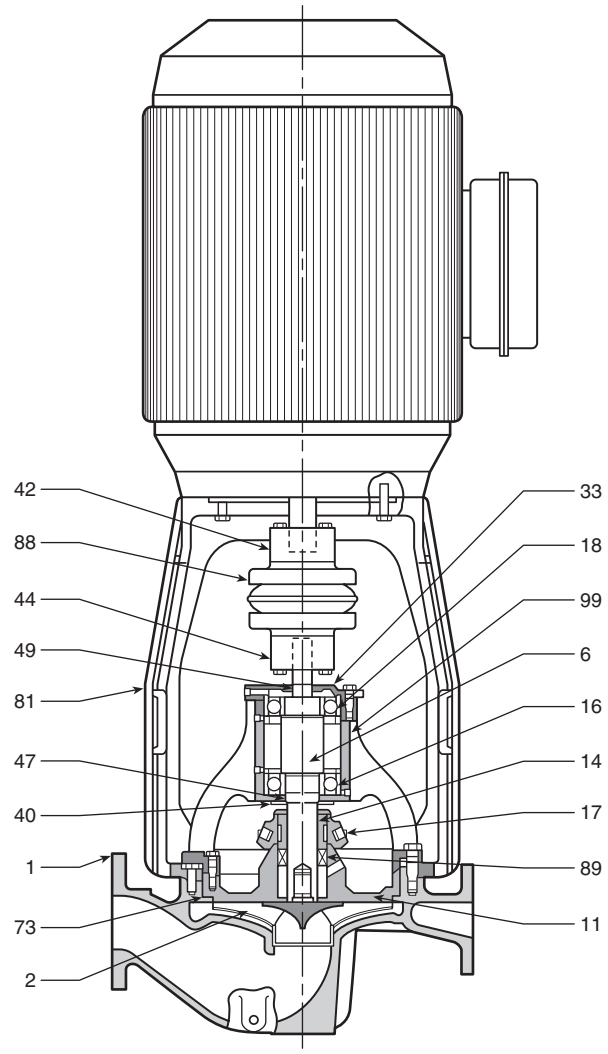

1 Casing
2 Impeller
6 Shaft, pump
11 Cover, seal chamber
14 Sleeve, shaft
16 Bearing, inboard
17 Gland
18 Bearing, outboard
33 Cap, bearing, outboard
40 Deflector
42 Coupling half, driver
44 Coupling half, pump
47 Seal, bearing cover, inboard
49 Seal, bearing cover, outboard
73 Gasket
81 Pedestal, driver
88 Spacer, coupling
89 Seal
99 Housing, bearing

FIGURE A.6.1.1(e) Overhung Impeller — Separately Coupled Single Stage — In-Line — Flexible Coupling.

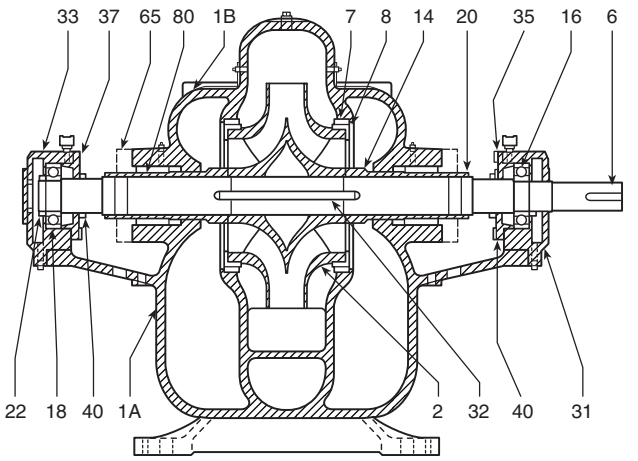

1A Casing, lower half
1B Casing, upper half
2 Impeller
6 Shaft
7 Ring, casing
8 Ring, impeller
14 Sleeve, shaft
16 Bearing, inboard
18 Bearing, outboard
20 Nut, shaft sleeve
22 Locknut
31 Housing, bearing inboard
32 Key, impeller
33 Housing, bearing outboard
35 Cover, bearing inboard
37 Cover, bearing outboard
40 Deflector
65 Seal, mechanical stationary element
80 Seal, mechanical rotating element

FIGURE A.6.1.1(f) Impeller Between Bearings — Separately Coupled — Single Stage — Axial (Horizontal) Split Case.

Copyright National Fire Protection Association
Provided by IHS under license with NFPA
No reproduction or networking permitted without license from IHS
Not for Resale

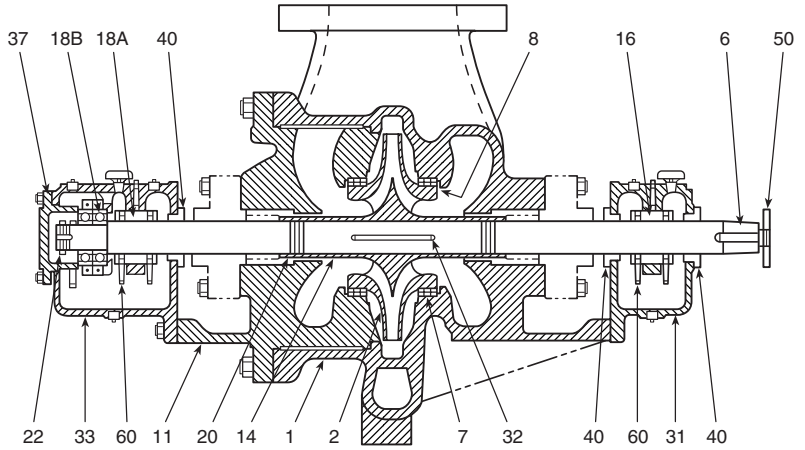

1 Casing
2 Impeller
6 Shaft
7 Ring, casing
8 Ring, impeller
11 Cover, stuffing-box
14 Sleeve, shaft
16 Bearing, inboard, sleeve
18A Bearing, outboard, sleeve
18B Bearing, outboard, ball
20 Nut, shaft sleeve
22 Locknut, bearing
31 Housing, bearing, inboard
32 Key, impeller
33 Housing, bearing, outboard
37 Cover, bearing, outboard
40 Deflector
50 Locknut, coupling
60 Ring, oil

FIGURE A.6.1.1(g) Impeller Between Bearings — Separately Coupled — Single Stage — Radial (Vertical) Split Case.

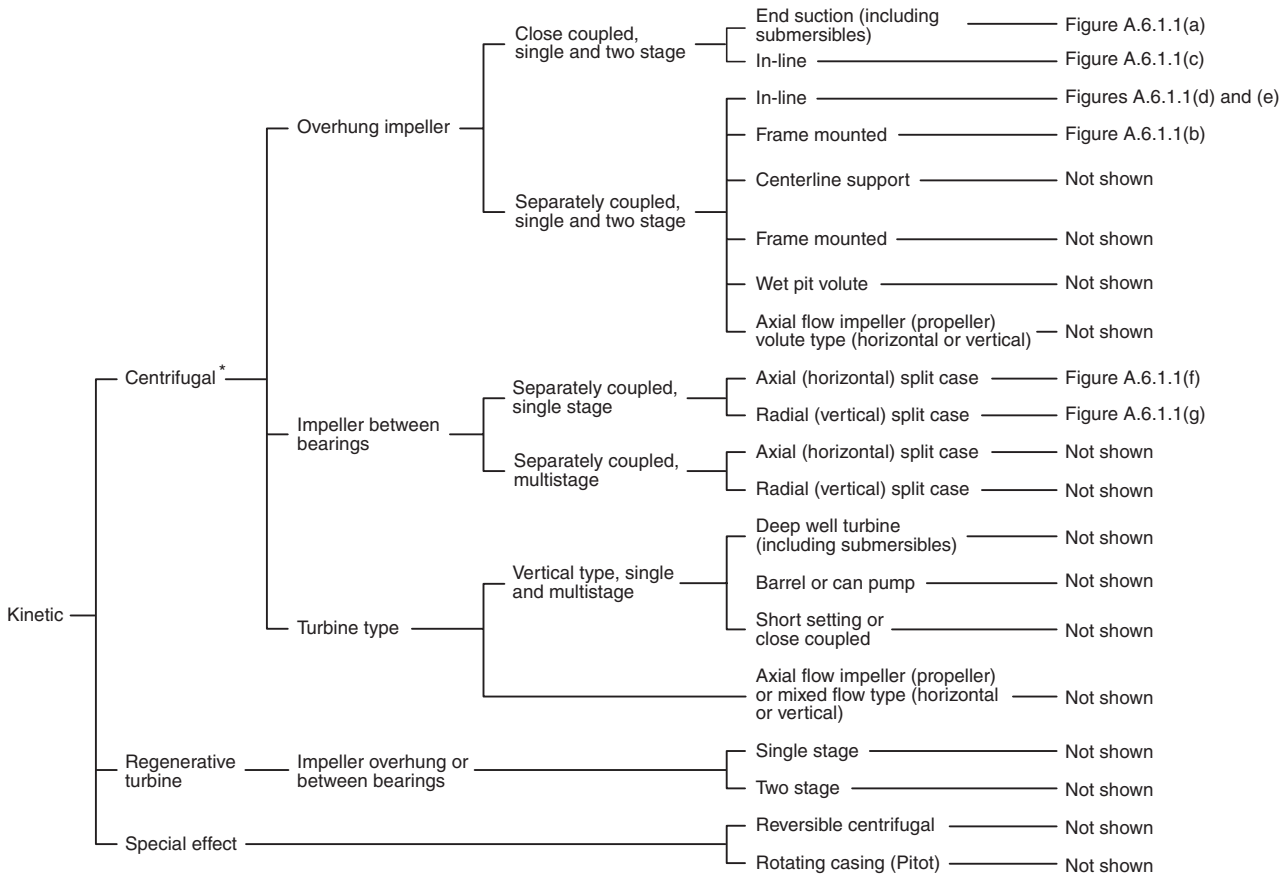

Note: Kinetic pumps can be classified by such methods as impeller or casing configuration, end application of the pump, specific speed, or mechanical configuration. The method used in this chart is based primarily on mechanical configuration.

*Includes radial, mixed flow, and axial flow designs.

FIGURE A.6.1.1(h) Types of Stationary Pumps.

Copyright National Fire Protection Association
Provided by IHS under license with NFPA
No reproduction or networking permitted without license from IHS
Not for Resale

A.6.2 Listed pumps can have different head capacity curve shapes for a given rating. Figure A.6.2 illustrates the extremes of the curve shapes probable. Shutoff head will range from a minimum of 101 percent to a maximum of 140 percent of rated head. At 150 percent of rated capacity, head will range from a minimum of 65 percent to a maximum of just below rated head. Pump manufacturers can supply expected curves for their listed pumps.

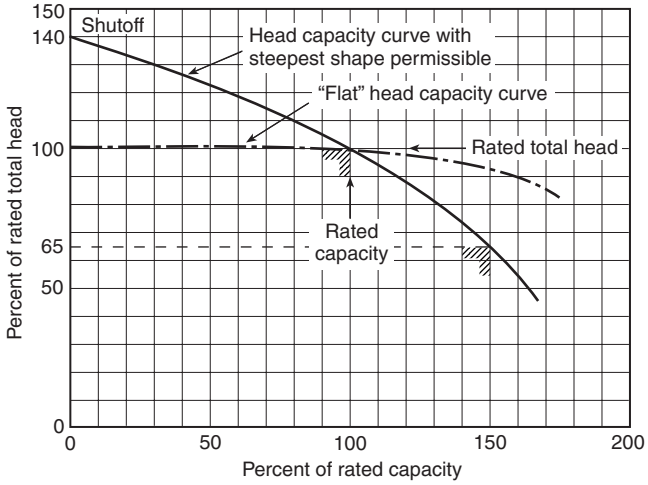

FIGURE A.6.2 Pump Characteristics Curves.

A.6.3.1 See Figure A.6.3.1.

A.6.4.1 Flexible couplings are used to compensate for temperature changes and to permit end movement of the connected shafts without interfering with each other.

A.6.4.4 A substantial foundation is important in maintaining alignment. The foundation preferably should be made of reinforced concrete.

A.6.5 If the pump and driver were shipped from the factory with both machines mounted on a common base plate, they were accurately aligned before shipment. All base plates are flexible to some extent and, therefore, should not be relied upon to maintain the factory alignment. Realignment is necessary after the complete unit has been leveled on the foundation and again after the grout has set and foundation bolts have been tightened. The alignment should be checked after the unit is piped and rechecked periodically. To facilitate accurate field alignment, most manufacturers either do not dowel the pumps or drivers on the base plates before shipment or, at most, dowel the pump only.

After the pump and driver unit has been placed on the foundation, the coupling halves should be disconnected. The coupling should not be reconnected until the alignment operations have been completed.

The purpose of the flexible coupling is to compensate for temperature changes and to permit end movement of the shafts without interference with each other while transmitting power from the driver to the pump.

The two forms of misalignment between the pump shaft and the driver shaft are as follows:

(1) *Angular misalignment* — shafts with axes concentric but not parallel

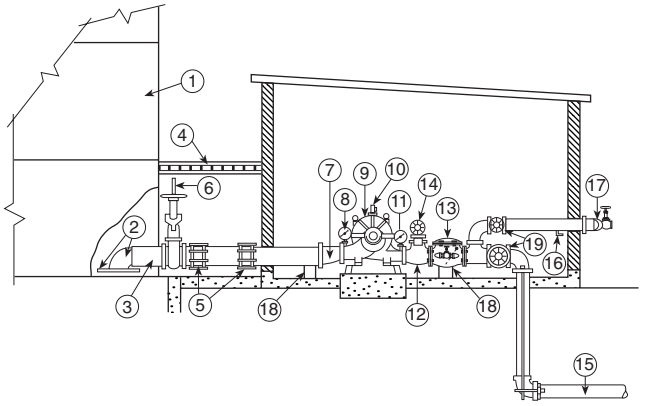

1 Aboveground suction tank
2 Entrance elbow and square steel vortex plate with dimensions at least twice the diameter of the suction pipe. Distance above the bottom of tank is one-half the diameter of the suction pipe with minimum of 6 in. (152 mm).
3 Suction pipe
4 Frostproof casing
5 Flexible couplings for strain relief
6 OS&Y gate valve *(see 5.14.5 and A.5.14.5)*
7 Eccentric reducer
8 Suction gauge
9 Horizontal split-case fire pump
10 Automatic air release
11 Discharge gauge
12 Reducing discharge tee
13 Discharge check valve
14 Relief valve (if required)
15 Supply pipe for fire protection system
16 Drain valve or ball drip
17 Hose valve manifold with hose valves
18 Pipe supports
19 Indicating gate or indicating butterfly valve

FIGURE A.6.3.1 Horizontal Split-Case Fire Pump Installation with Water Supply Under a Positive Head.

(2) *Parallel misalignment* — shafts with axes parallel but not concentric

The faces of the coupling halves should be spaced within the manufacturer's recommendations and far enough apart so that they cannot strike each other when the driver rotor is moved hard over toward the pump. Due allowance should be made for wear of the thrust bearings. The necessary tools for an approximate check of the alignment of a flexible coupling are a straight edge and a taper gauge or a set of feeler gauges.

A check for angular alignment is made by inserting the taper gauge or feelers at four points between the coupling faces and comparing the distance between the faces at four points spaced at 90-degree intervals around the coupling. *[See Figure A.6.5(a).]* The unit will be in angular alignment when the measurements show that the coupling faces are the same distance apart at all points.

A check for parallel alignment is made by placing a straight edge across both coupling rims at the top, bottom, and both sides. *[See Figure A.6.5(b).]* The unit will be in parallel alignment when the straight edge rests evenly on the coupling rim at all positions.

Allowance might be necessary for temperature changes and for coupling halves that are not of the same outside diameter. Care should be taken to have the straight edge parallel to the axes of the shafts.

Angular and parallel misalignment are corrected by means of shims under the motor mounting feet. After each change, it is necessary to recheck the alignment of the coupling halves. Adjustment in one direction can disturb adjustments already

Copyright National Fire Protection Association
Provided by IHS under license with NFPA
No reproduction or networking permitted without license from IHS
Not for Resale

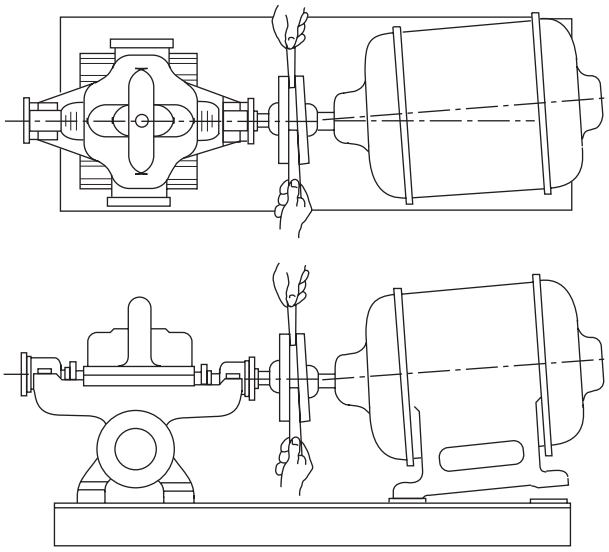

FIGURE A.6.5(a) Checking Angular Alignment. *(Courtesy of Hydraulics Institute Standards for Centrifugal, Rotary and Reciprocating Pumps.)*

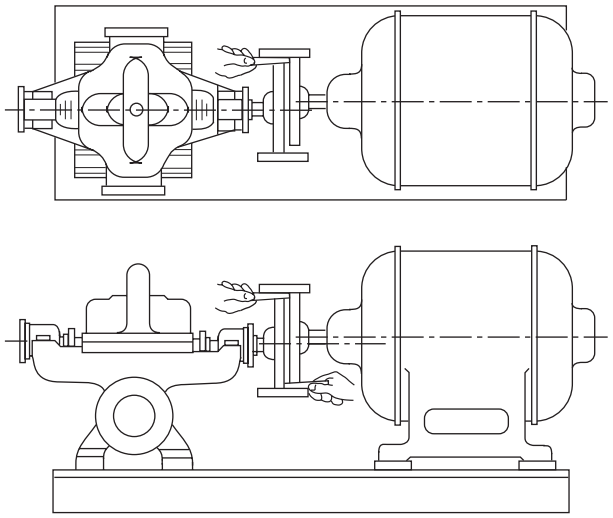

FIGURE A.6.5(b) Checking Parallel Alignment. *(Courtesy of Hydraulics Institute Standards for Centrifugal, Rotary and Reciprocating Pumps.)*

made in another direction. It should not be necessary to adjust the shims under the pump.

The permissible amount of misalignment will vary with the type of pump, driver, and coupling manufacturer, model, and size.

The best method for putting the coupling halves in final accurate alignment is by the use of a dial indicator.

When the alignment is correct, the foundation bolts should be tightened evenly but not too firmly. The unit can then be grouted to the foundation. The base plate should be completely filled with grout, and it is desirable to grout the leveling pieces, shims, or wedges in place. Foundation bolts should not be fully tightened until the grout is hardened, usually about 48 hours after pouring.

After the grout has set and the foundation bolts have been properly tightened, the unit should be checked for parallel and angular alignment, and, if necessary, corrective measures taken. After the piping of the unit has been connected, the alignment should be checked again.

The direction of driver rotation should be checked to make certain that it matches that of the pump. The corresponding direction of rotation of the pump is indicated by a direction arrow on the pump casing.

The coupling halves can then be reconnected. With the pump properly primed, the unit then should be operated under normal operating conditions until temperatures have stabilized. It then should be shut down and immediately checked again for alignment of the coupling. All alignment checks should be made with the coupling halves disconnected and again after they are reconnected.

After the unit has been in operation for about 10 hours or 3 months, the coupling halves should be given a final check for misalignment caused by pipe or temperature strains. If the alignment is correct, both pump and driver should be dowelled to the base plate. Dowel location is very important and the manufacturer's instructions should be followed, especially if the unit is subjected to temperature changes.

The unit should be checked periodically for alignment. If the unit does not stay in line after being properly installed, the following are possible causes:

(1) Settling, seasoning, or springing of the foundation and pipe strains distorting or shifting the machine
(2) Wearing of the bearings
(3) Springing of the base plate by heat from an adjacent steam pipe or from a steam turbine
(4) Shifting of the building structure due to variable loading or other causes
(5) The unit and foundation are new, and the alignment might need to be slightly readjusted from time to time.

A.7.1 Satisfactory operation of vertical turbine–type pumps is dependent to a large extent upon careful and correct installation of the unit; therefore, it is recommended that this work be done under the direction of a representative of the pump manufacturer.

A.7.1.1 The vertical shaft turbine—type pump is particularly suitable for fire pump service where the water source is located below ground and where it would be difficult to install any other type of pump below the minimum water level. It was originally designed for installation in drilled wells but is permitted to be used to lift water from lakes, streams, open swamps, and other subsurface sources. Both oil-lubricated enclosed-line-shaft and water-lubricated open-line-shaft pumps are used. *(See Figure A.7.1.1.)* Some health departments object to the use of oil-lubricated pumps; such authorities should be consulted before proceeding with oil-lubricated design.

A.7.2.1.1 Stored water supplies from reservoirs or tanks supplying wet pits are preferable. Lakes, streams, and groundwater supplies are acceptable where investigation shows that they can be expected to provide a suitable and reliable supply.

A.7.2.1.2 The authority having jurisdiction can require an aquifer performance analysis. The history of the water table should be carefully investigated. The number of wells already in use in the area and the probable number that can be in use should be considered in relation to the total amount of water available for fire protection purposes.

Copyright National Fire Protection Association
Provided by IHS under license with NFPA
No reproduction or networking permitted without license from IHS
Not for Resale

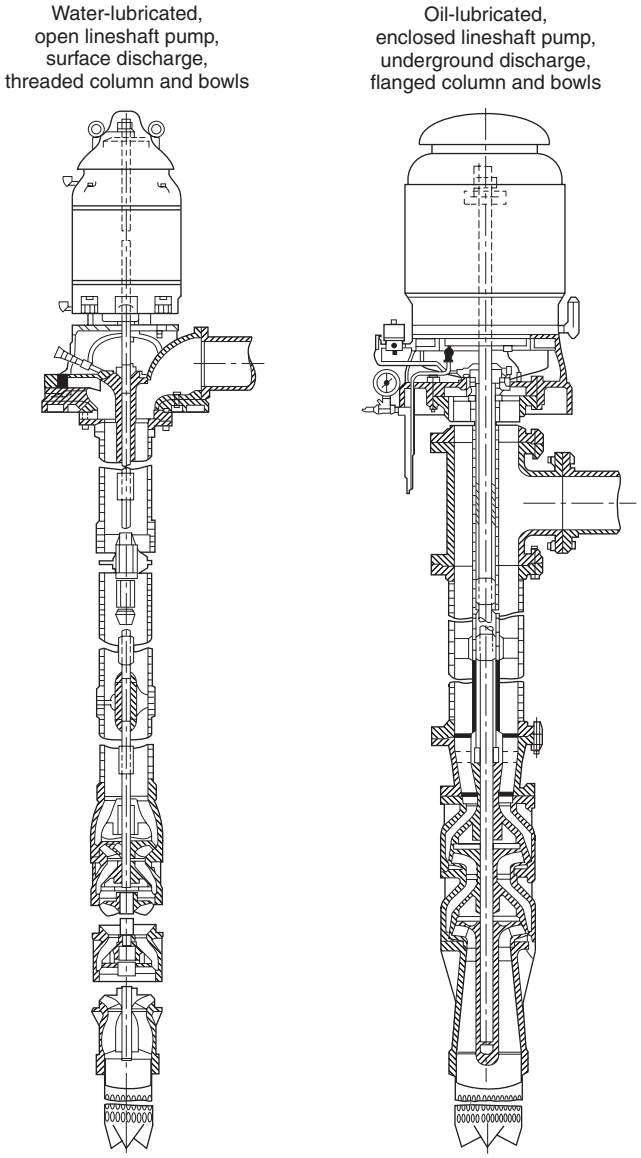

FIGURE A.7.1.1 Water-Lubricated and Oil-Lubricated Shaft Pumps.

A.7.2.2.1 See Figure A.7.2.2.1.

A.7.2.2.2 The velocities in the approach channel or intake pipe should not exceed approximately 2 ft/sec (0.7 m/sec), and the velocity in the wet pit should not exceed approximately 1 ft/sec (0.3 m/sec). *(See Figure A.7.2.2.2.)*

The ideal approach is a straight channel coming directly to the pump. Turns and obstructions are detrimental because they can cause eddy currents and tend to initiate deep-cored vortices. The amount of submergence for successful operation will depend greatly on the approaches of the intake and the size of the pump.

The *Hydraulics Institute Standards for Centrifugal, Rotary and Reciprocating Pumps* recommends sump dimensions for flows 3000 gpm (11,355 L/min) and larger. The design of sumps for pumps with discharge capacities less than 3000 gpm (11,355 L/min) should be guided by the same general principles shown in the *Hydraulics Institute Standards for Centrifugal, Rotary and Reciprocating Pumps*.

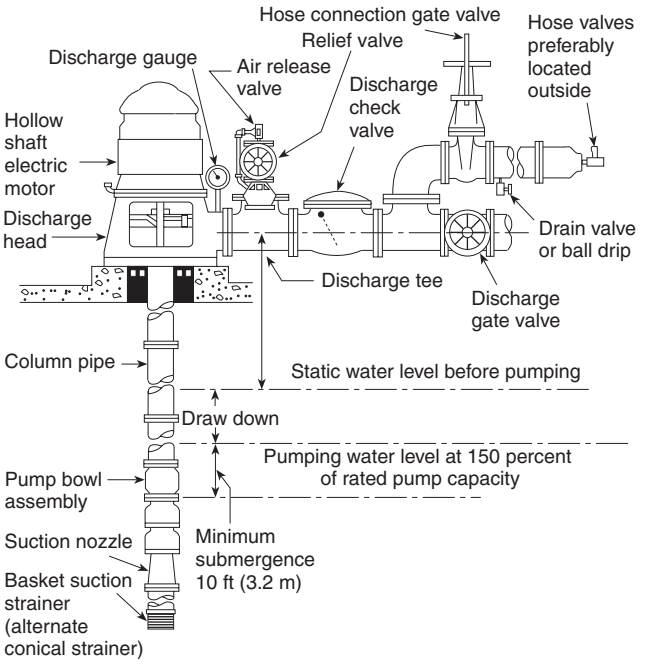

Note: The distance between the bottom of the strainer and the bottom of the wet pit should be one-half of the pump bowl diameter but not less than 12 in. (305 mm).

FIGURE A.7.2.2.1 Vertical Shaft Turbine–Type Pump Installation in a Well.

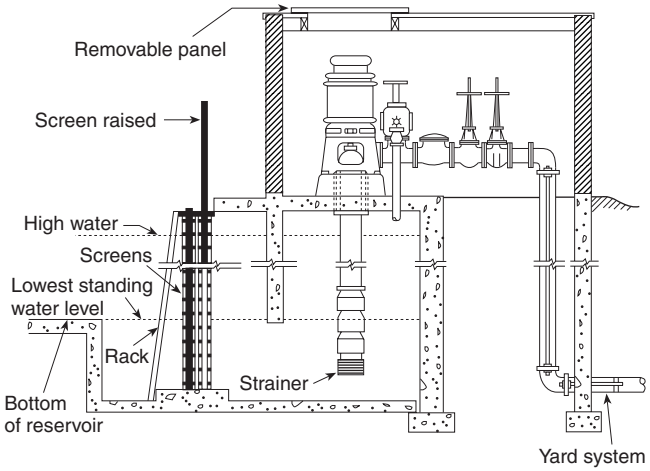

FIGURE A.7.2.2.2 Vertical Shaft Turbine–Type Pump Installation in a Wet Pit.

A.7.2.5 Where wells take their supply from consolidated formations such as rock, the specifications for the well should be decided upon by the authority having jurisdiction after consultation with a recognized groundwater consultant in the area.

Copyright National Fire Protection Association
Provided by IHS under license with NFPA
No reproduction or networking permitted without license from IHS
Not for Resale

A.7.2.7 Before the permanent pump is ordered, the water from the well should be analyzed for corrosiveness, including such items as pH, salts such as chlorides, and harmful gases such as carbon dioxide (CO_2) or hydrogen sulfide (H_2S). If the water is corrosive, the pumps should be constructed of a suitable corrosion-resistant material or covered with special protective coatings in accordance with the manufacturers' recommendations.

A.7.3.1 See Figure A.7.3.1.

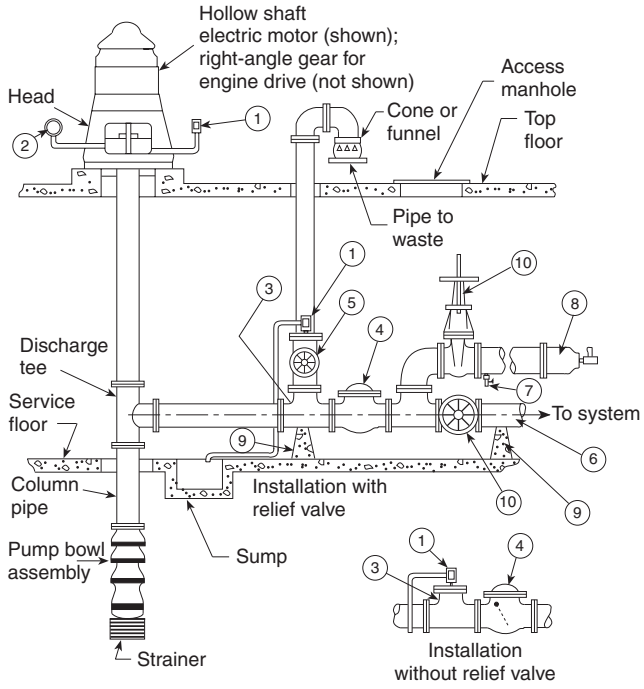

1 Automatic air release
2 Discharge gauge
3 Reducing discharge tee
4 Discharge check valve
5 Relief valve (if required)
6 Discharge pipe
7 Drain valve or ball drip
8 Hose valve manifold with hose valves
9 Pipe supports
10 Indicating gate or indicating butterfly valve

FIGURE A.7.3.1 Belowground Discharge Arrangement.

A.7.3.2.1 In countries that utilize the metric system, there do not appear to be standardized flow ratings for pump capacities; therefore, a soft metric conversion is utilized.

A.7.3.5.3 Water level detection using the air line method is as follows:

(1) A satisfactory method of determining the water level involves the use of an air line of small pipe or tubing of known vertical length, a pressure or depth gauge, and an ordinary bicycle or automobile pump installed as shown in Figure A.7.3.5.3. The air line pipe should be of known length and extend beyond the lowest anticipated water level in the well, to ensure more reliable gauge readings, and should be properly installed. An air pressure gauge is used to indicate the pressure in the air line. *(See Figure A.7.3.5.3.)*

(2) The air line pipe is lowered into the well, a tee is placed in the line above the ground, and a pressure gauge is screwed into one connection. The other connection is fitted with an ordinary bicycle valve to which a bicycle pump is attached. All joints should be made carefully and should be airtight to obtain correct information. When air is forced into the line by means of the bicycle pump, the gauge pressure increases until all of the water has been expelled. When this point is reached, the gauge reading becomes constant. The maximum maintained air pressure recorded by the gauge is equivalent to that necessary to support a column of water of the same height as that forced out of the air line. The length of this water column is equal to the amount of air line submerged.

(3) Deducting this pressure converted to feet (meters) (pressure in psi × 2.31 = pressure in feet, and pressure in bar × 10.3 = pressure in meters) from the known length of the air line will give the amount of submergence.

Example: The following calculation will serve to clarify Figure A.7.3.5.3.

Assume a length (L) of 50 ft (15.2 m).

The pressure gauge reading before starting the fire pump (p_1) = 10 psi (0.68 bar). Then $A = 10 \times 2.31 = 23.1$ ft ($0.68 \times 10.3 = 7.0$ m). Therefore, the water level in the well before starting the pump would be $B = L–A = 50$ ft − 23.1 ft = 26.9 ft ($B = L - A = 15.2$ m − 7 m = 8.2 m).

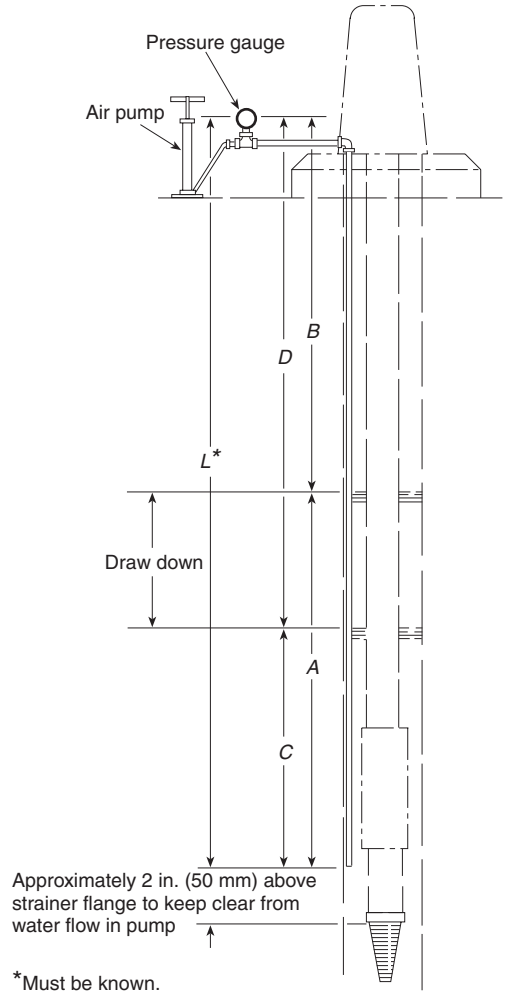

FIGURE A.7.3.5.3 Air Line Method of Determining Depth of Water Level.

Copyright National Fire Protection Association
Provided by IHS under license with NFPA
No reproduction or networking permitted without license from IHS
Not for Resale

The pressure gauge reading when pump is running (p_2) = 8 psi (0.55 bar). Then $C = 8 \times 2.31 = 18.5$ ft ($0.55 \times 10.3 = 5.6$ m). Therefore, the water level in the well when the pump is running would be $D = L–C = 50$ ft − 18.5 ft = 31.5 ft ($D = L - C = 15.2$ m − 5.6 m = 9.6 m).

The draw down can be determined by any of the following methods:

(1) $D - B = 31.5$ ft − 26.9 ft = 4.6 ft (9.6 m − 8.2 m = 1.4 m)
(2) $A - C = 23.1$ ft − 18.5 ft = 4.6 ft (7.0 m − 5.6 m = 1.4 m)
(3) $p_1 - p_2 = 10 - 8 = 2$ psi $= 2 \times 2.31 = 4.6$ ft (0.68 − 0.55 = 0.13 bar = $0.13 \times 10.3 = 1.4$ m)

A.7.4 Several methods of installing a vertical pump can be followed, depending upon the location of the well and facilities available. Since most of the unit is underground, extreme care should be used in assembly and installation, thoroughly checking the work as it progresses. The following simple method is the most common:

(1) Construct a tripod or portable derrick and use two sets of installing clamps over the open well or pump house. After the derrick is in place, the alignment should be checked carefully with the well or wet pit to avoid any trouble when setting the pump.
(2) Attach the set of clamps to the suction pipe on which the strainer has already been placed and lower the pipe into the well until the clamps rest on a block beside the well casing or on the pump foundation.
(3) Attach the clamps to the pump stage assembly, bring the assembly over the well, and install pump stages to the suction pipe, until each piece has been installed in accordance with the manufacturer's instructions.

A.7.6.1.1 The setting of the impellers should be undertaken only by a representative of the pump manufacturer. Improper setting will cause excessive friction loss due to the rubbing of impellers on pump seals, which results in an increase in power demand. If the impellers are adjusted too high, there will be a loss in capacity, and full capacity is vital for fire pump service. The top shaft nut should be locked or pinned after proper setting.

A.7.6.1.4 Pumping units are checked at the factory for smoothness of performance and should operate satisfactorily on the job. If excessive vibration is present, the following conditions could be causing the trouble:

(1) Bent pump or column shaft
(2) Impellers not properly set within the pump bowls
(3) Pump not hanging freely in the well
(4) Strain transmitted through the discharge piping

Excessive motor temperature is generally caused either by a maintained low voltage of the electric service or by improper setting of impellers within the pump bowls.

A.8.1 All the requirements in Chapter 5 might not apply to positive displacement pumps.

A.8.1.2 Special attention to the pump inlet piping size and length should be noted.

A.8.1.2.2 This material describes a sample pump characteristic curve and gives an example of pump selection methods. Characteristic performance curves should be in accordance with HI 3.6, *Rotary Pump Tests.*

Example: An engineer is designing a foam-water fire protection system. It has been determined, after application of appropriate safety factors, that the system needs a foam concentrate pump capable of 45 gpm at the maximum system pressure of 230 psi. Using the performance curve *(see Figure A.8.1.2.2)* for pump model "XYZ-987," this pump is selected for the application. First, find 230 psi on the horizontal axis labeled "Differential pressure," then proceed vertically to the flow curve to 45 gpm. It is noted that this particular pump produces 46 gpm at a standard motor speed designated "rpm-2." This pump is an excellent fit for the application. Next, proceed to the power curve for the same speed of rpm-2 at 230 psi and find that it requires 13.1 hp to drive the pump. An electric motor will be used for this application, so a 15 hp motor at rpm-2 is the first available motor rating above this minimum requirement.

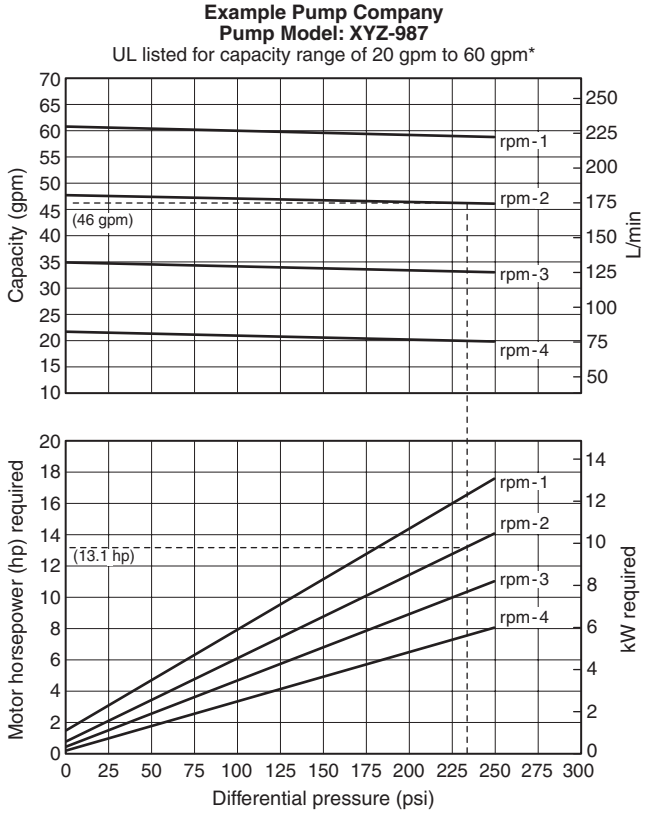

*Conforms to requirements of Chapter 8 on positive displacement foam concentrate and additive pumps.

FIGURE A.8.1.2.2 Example of Positive Displacement Pump Selection.

A.8.1.5 Positive displacement pumps are tolerance dependent. Corrosion can affect pump performance and function. *(See HI 3.5, Standard for Rotary Pumps for Nomenclature, Design, Application and Operation.)*

A.8.2.2 Specific flow rates should be determined by the applicable NFPA standard. Viscose concentrates and additives have significant pipe friction loss from the supply tank to the pump suction.

A.8.2.4 This requirement does not apply to water mist pumps.

--`,,```,,,,````-`-`,,`,,`,`,,`---

Copyright National Fire Protection Association
Provided by IHS under license with NFPA
No reproduction or networking permitted without license from IHS
Not for Resale

A.8.2.5 Generally, pump capacity is calculated by multiplying the maximum water flow by the percentage of concentration desired. To that product is added a 10 percent "over demand" to ensure that adequate pump capacity is available under all conditions.

A.8.2.6 Generally, concentrate pump discharge pressure is required to be added to the maximum water pressure at the injection point plus 25 psi (2 bar).

A.8.3.1 It is not the intent of this standard to prohibit the use of stationary pumps for water mist systems.

A.8.4.2 Positive displacement pumps are capable of quickly exceeding their maximum design discharge pressure if operated against a closed discharge system. Other forms of protective devices (e.g., automatic shutdowns, rupture discs) are considered a part of the pumping system and are generally beyond the scope of the pump manufacturer's supply. These components should be safely designed into and supplied by the system designer and/or by the user. *(See Figure A.8.4.2 for proposed schematic layout of pump requirements.)*

A.8.4.3 Only the return to source and external styles should be used when the outlet line can be closed for more than a few minutes. Operation of a pump with an integral relief valve and a closed outlet line will cause overheating of the pump and a foamy discharge of fluid after the outlet line is reopened.

A.8.4.4 Backpressure on the discharge side of the pressure relief valve should be considered. *(See Figure A.8.4.4 for proposed schematic layout of pump requirement.)*

A.8.4.5 Strainer recommended mesh size is based on the internal pump tolerances. *(See Figure A.8.4.5 for standard mesh sizes.)*

A.8.5.1 Positive displacement pumps are typically driven by electric motors, internal combustion engines, or water motors.

A.8.6 These controllers can incorporate means to permit automatic unloading or pressure relief when starting the pump driver.

A.9.1.4 Where the power supply involves an on-site power production facility, the protection is required for the facility in addition to the wiring and equipment.

A.9.2.2 Phase converters that take single phase power and convert it to three phase power for the use of fire pump motors are not recommended because of the imbalance in the voltage between the phases when there is no load on the equipment. If the power utility installs phase converters in its own power transmission lines, such phase converters are outside the scope of this standard and need to be evaluated by the authority having jurisdiction to determine the reliability of the electric supply.

A.9.2.3.1(3) The disconnecting means should be located such that inadvertent simultaneous operation is not likely.

A.9.2.3.1(4) The disconnecting means should be located such that inadvertent simultaneous operation is not likely.

A.9.3.2 A reliable power source possesses the following characteristics:

(1) The source power plant has not experienced any shutdowns of longer than 4 continuous hours in the year prior to plan submittal. NFPA 25, *Standard for the Inspection, Testing, and Maintenance of Water-Based Fire Protection Systems*, begins to require special undertakings (i.e., fire watches) when a water-based fire protection system is taken out of service for longer than 4 hours. If the normal source power plant has been intentionally shut down for longer than 4 hours in the past, it is reasonable to require a back-up source of power.
(2) No power outages have been experienced in the area of the protected facility caused by failures in the power grid that were not due to natural disasters or electric grid management failure. The standard does not require that the normal source of power is infallible. NFPA 20 does not intend to require a back-up source of power for every installation using an electric motor–driven fire pump. Should the normal

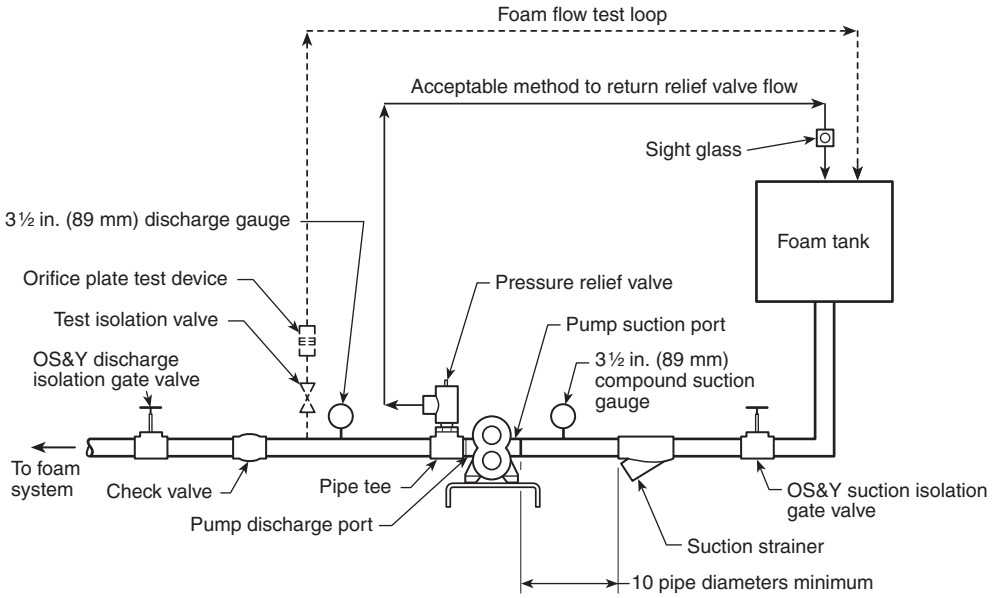

FIGURE A.8.4.2 Typical Foam Pump Piping and Fittings.

Copyright National Fire Protection Association
Provided by IHS under license with NFPA
No reproduction or networking permitted without license from IHS
Not for Resale

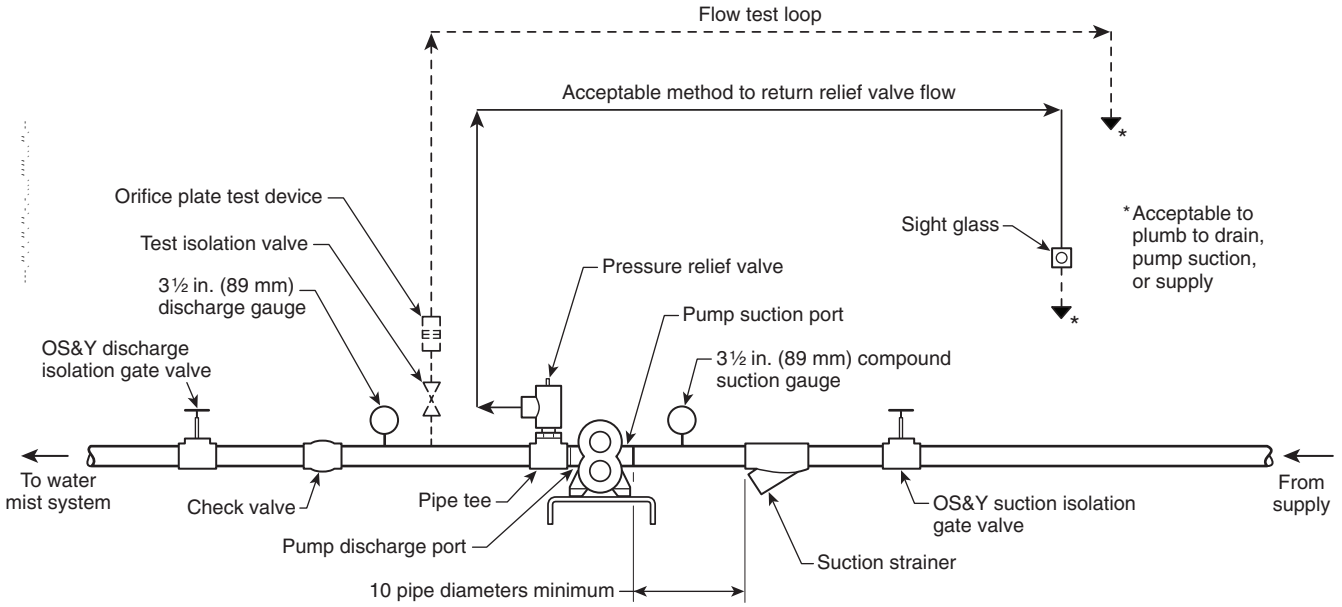

FIGURE A.8.4.4 Typical Water Mist System Pump Piping and Fittings.

Mesh	20	40	60	80	100
Opening (in.)	0.034	0.015	0.0092	0.007	0.0055
Opening (μ)	860	380	230	190	140

FIGURE A.8.4.5 Standard Mesh Sizes.

source of power fail due to a natural disaster (hurricane) or due to a problem with electric grid management (regional blackout), the fire protection system could be supplied through the fire department connection. However, if the power grid is known to have had problems in the past (i.e., switch failures or animals shorting a substation), it is reasonable to require a back-up source of power.

(3) The normal source of power is not supplied by overhead conductors outside the protected facility. Fire departments responding to an incident at the protected facility will not operate aerial apparatus near live overhead power lines, without exception. A back-up source of power is required in case this scenario occurs and the normal source of power must be shut off. Additionally, many utility providers will remove power to the protected facility by physically cutting the overhead conductors. If the normal source of power is provided by overhead conductors, which will not be identified, the utility provider could mistakenly cut the overhead conductor supplying the fire pump.

(4) Only the disconnect switches and overcurrent protection devices permitted by 9.2.3 are installed in the normal source of power. Power disconnection and activated overcurrent protection should only occur in the fire pump controller. The provisions of 9.2.2 for the disconnect switch and overcurrent protection essentially require disconnection and overcurrent protection to occur in the fire pump controller. If unanticipated disconnect switches or overcurrent protection devices are installed in the normal source of power that do not meet the requirements of 9.2.2, the normal source of power must be considered not reliable and a back-up source of power is necessary.

Typical methods of routing power from the source to the motor are shown in Figure A.9.3.2. Other configurations are also acceptable. The determination of the reliability of a service is left up to the discretion of the authority having jurisdiction.

A.9.3.6(2) See also 10.3.3.

A.9.3.6(3) See 10.1.2.1, controller short circuit (withstand) rating.

A.9.3.7.1 Cutting slots or rectangular cutouts in a fire pump controller will violate the enclosure type rating and the controller's short circuit (withstand) rating and will void the manufacturer's warranty. See also NFPA 70, *National Electrical Code*, Articles 300.20 and 322, for example, for further information.

A.9.3.7.2 When so required, this seal is to prevent flammable gases from entering into the fire pump controller.

A.9.4 Normally, conductor sizing is based on appropriate sections of NFPA 70, *National Electrical Code*, Article 430, except larger sizes could be required to meet the requirements of NFPA 70, Section 695.7 (NFPA 20, Section 9.4). Transformer sizing is to be in accordance with NFPA 70, Section 695.5(a), except larger minimum sizes could be required to meet the requirements of NFPA 70, Section 695.7 (NFPA 20, Section 9.4).

A.9.5.1.4 The locked rotor currents for 460 V motors are approximately six times the full-load current.

A.9.6.2 Where a generator is installed to supply power to loads in addition to one or more fire pump drivers, the fuel supply should be sized to provide adequate fuel for all connected loads for the desired duration. The connected loads can include such loads as emergency lighting, exit signage, and elevators.

Copyright National Fire Protection Association
Provided by IHS under license with NFPA
No reproduction or networking permitted without license from IHS
Not for Resale

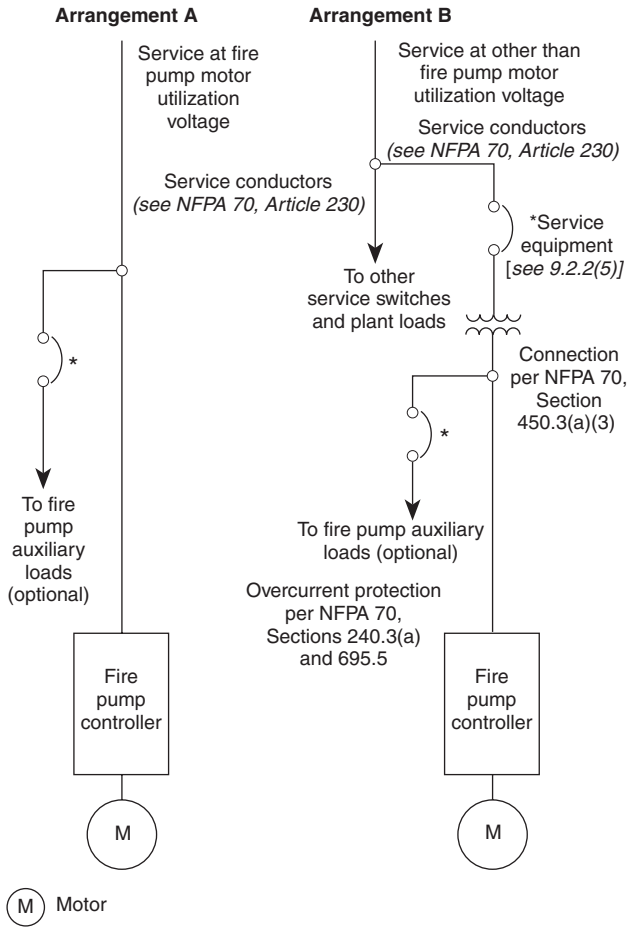

FIGURE A.9.3.2 Typical Power Supply Arrangements from Source to Motor.

A.9.6.5 Generator protective devices, where used, need to be sized to allow the generator to allow instantaneous pickup of the full pump room load. This includes starting any and all connected fire pumps in the across-the-line (direct on line) full voltage starting mode. This is always the case when the fire pump(s) is running by use of the emergency mechanical operator of 10.5.3.2.

A.10.1.2.2 The phrase *suitable for use* means that the controller and transfer switch have been prototype tested and have demonstrated by these tests their short-circuit withstandability and interrupting capacity at the stated magnitude of short-circuit current and voltage available at their line terminals. *(See ANSI/UL 509, Standard for Safety Industrial Control Equipment, and ANSI/UL 1008, Standard for Safety Automatic Transfer Switches.)*

A short-circuit study should be made to establish the available short-circuit current at the controller in accordance with IEEE 141, *Electric Power Distribution for Industrial Plants,* IEEE 241, *Electric Systems for Commercial Buildings,* or other acceptable methods.

After the controller and transfer switch have been subjected to a high fault current, they might not be suitable for further use without inspection or repair. *(See NEMA ICS 2.2, Maintenance of Motor Controllers After a Fault Condition.)*

A.10.1.3 All electrical control equipment design should also follow the guidelines within NEMA ICS 14, *Application Guide for Electric Pump Controllers.*

A.10.2.1 If the controller must be located outside the pump room, a glazed opening should be provided in the pump room wall for observation of the motor and pump during starting. The pressure control pipe line should be protected against freezing and mechanical injury.

A.10.3.3.1 For more information, see NEMA 250, *Enclosures for Electrical Equipment.*

A.10.3.6 For more information, see NFPA 70, *National Electrical Code.*

A.10.3.7.3 Pump operators should be familiar with instructions provided for controllers and should observe in detail all their recommendations.

A.10.4.1 Operation of the surge arrester should not cause either the isolating switch or the circuit breaker to open. Arresters in ANSI/IEEE C62.11, *IEEE Standard for Metal-Oxide Surge Arresters for AC Power Circuits,* are normally zinc-oxide without gaps.

A.10.4.2.1.2 For more information, see NFPA 70, *National Electrical Code.*

A.10.4.2.3 For more information, see NFPA 70, *National Electrical Code.*

A.10.4.3.1 For more information, see NFPA 70, *National Electrical Code,* Article 100.

A.10.4.3.3 Attention should be given to the type of service grounding to establish circuit breaker interrupting rating based on grounding type employed.

A.10.4.3.3.1(4) The interrupting rating can be less than the suitability rating where other devices within the controller assist in the current-interrupting process.

A.10.4.3.3.2 Current limiters are melting link-type devices that, where used as an integral part of a circuit breaker, limit the current during a short circuit to within the interrupting capacity of the circuit breaker.

A.10.4.4.1(3) It is recommended that the locked rotor overcurrent device not be reset more than two consecutive times if tripped due to a locked rotor condition without first inspecting the motor for excessive heating and to alleviate or eliminate the cause preventing the motor from attaining proper speed.

A.10.4.5.7 The signal should incorporate local visible indication and contacts for remote indication. The signal can be incorporated as part of the power available indication and loss of phase signal. *(See 10.4.6.1 and 10.4.7.2.2.)*

A.10.4.6 The pilot lamp for signal service should have operating voltage less than the rated voltage of the lamp to ensure long operating life. When necessary, a suitable resistor or potential transformer should be used to reduce the voltage for operating the lamp.

A.10.4.7 Where unusual conditions exist whereby pump operation is not certain, a "failed-to-operate" fire pump alarm is recommended. In order to supervise the power source for the fire pump alarm circuit, the controller can be arranged to start upon failure of the supervised alarm circuit power.

Copyright National Fire Protection Association
Provided by IHS under license with NFPA
No reproduction or networking permitted without license from IHS
Not for Resale

A.10.5.1 The following definitions are derived from NFPA 70, *National Electrical Code*:

(1) *Automatic.* Self-acting, operating by its own mechanism when actuated by some impersonal influence, as, for example, a change in current strength, pressure, temperature, or mechanical configuration.
(2) *Nonautomatic.* Action requiring intervention for its control. As applied to an electric controller, nonautomatic control does not necessarily imply a manual controller, but only that personal intervention is necessary.

A.10.5.2.1 Installation of the pressure-sensing line between the discharge check valve and the control valve is necessary to facilitate isolation of the jockey pump controller (and sensing line) for maintenance without having to drain the entire system. *[See Figure A.10.5.2.1(a) and Figure A.10.5.2.1(b).]*

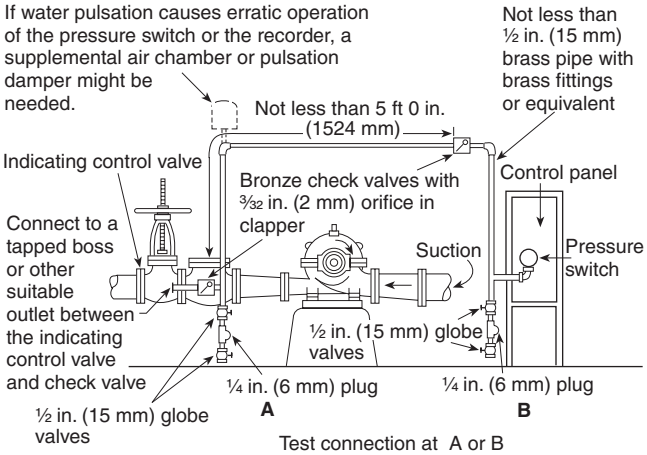

Notes:
(1) Solenoid drain valve used for engine-driven fire pumps can be at A, B, or inside controller enclosure.
(2) If water is clean, ground-face unions with noncorrosive diaphragms drilled for 3⁄32 in. orifices can be used in place of the check valves.

FIGURE A.10.5.2.1(a) Piping Connection for Each Automatic Pressure Switch (for Electric Fire Pump and Jockey Pumps).

A.10.5.2.1.6.2 The pressure recorder should be able to record a pressure at least 150 percent of the pump discharge pressure under no-flow conditions. In a high-rise building, this requirement can exceed 400 psi (27.6 bar). This pressure recorder should be readable without opening the fire pump controller enclosure. This requirement does not mandate a separate recording device for each controller. A single multichannel recording device can serve multiple sensors.

A.10.5.3.2 The emergency-run mechanical control provides means for externally, manually closing the motor contactor across-the-line to start and run the fire pump motor. It is intended for emergency use when normal electric/magnetic operation of the contactor is not possible.

When so used on controllers designed for reduced-voltage starting, the 15 percent voltage drop limitation in Section 9.4 is not applicable.

A.10.7 The use of limited-service controllers for fire service is permitted for special situations when acceptable to the authority having jurisdiction. NFPA 20 permits limited service controllers

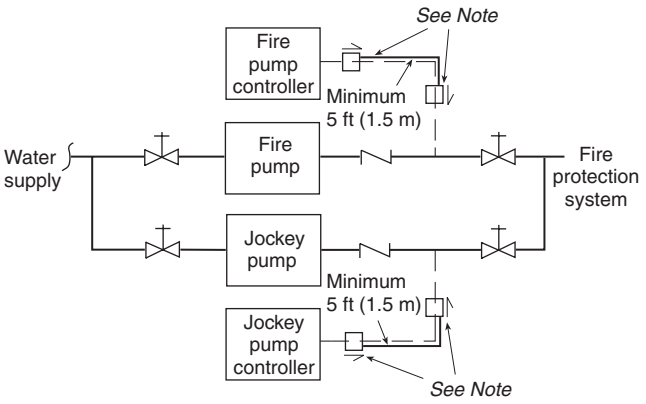

Note: Check valves or ground-face unions complying with 10.5.2.1.

FIGURE A.10.5.2.1(b) Piping Connection for Pressure-Sensing Line (Electric Fire Pump).

(LSCs) to have no isolating switch and use thermally responsive overcurrent protective devices that limit their application. These compromises have introduced the following:

(1) The controller circuit breaker can trip if the fire is near (can't reset because breaker is hot, even when using the manual/emergency handle).
(2) Substantially longer reset time if breaker trips due to distressed pump, and so forth. Tripping consistency and reset times are compromised on "hot-starts."
(3) Substantially longer "down time" (no fire protection) if breaker needs service/replacement due to no isolating switch. Most LSCs are SUSE (suitable for use as service equipment) rated and are so used.
(4) Sizing of breaker is different and can significantly exceed the 8 seconds to 20 seconds locked rotor current (LRC) trip time of a full-service fire pump controller depending on hot or cold starts.

A.10.8 Typical fire pump controller and transfer switch arrangements are shown in Figure A.10.8. Other configurations can also be acceptable.

A.10.8.2 The compartmentalization or separation is to prevent propagation of a fault in one compartment to the source in the other compartment.

A.10.10 See Figure A.10.10.

A.10.10.3 The bypass path constitutes all of the characteristics of a non-variable speed fire pump controller.

A.10.10.3.1 The bypass contactor should be energized only when there is a pump demand to run and the variable speed pressure limiting control is in the fault condition.

A.10.10.3.1.2 Variable speed drive units (VSDs) should have a positive means of indicating that the drive is operational within a few seconds after power application. If the VSD fails, there is no need to wait for the low pressure bypass time of 10.10.3.1.1.

A.10.10.3.1.3 A motor running at a reduced frequency cannot be connected immediately to a source at line frequency without creating high transient currents that can cause tripping of the fire pump circuit breaker. It is also important to take extra care not to connect (back feed) line frequency

Copyright National Fire Protection Association
Provided by IHS under license with NFPA
No reproduction or networking permitted without license from IHS
Not for Resale

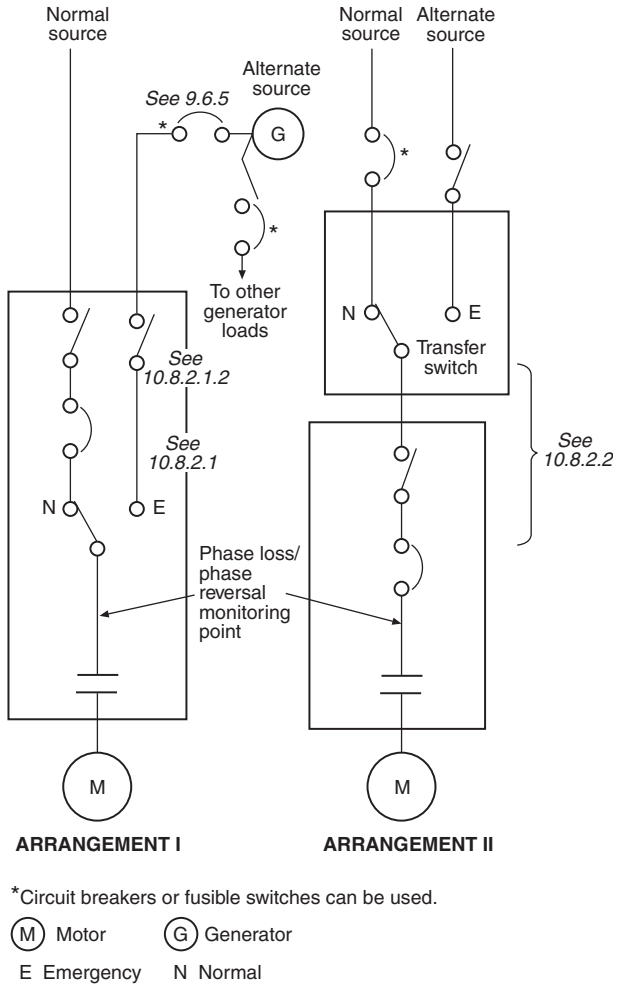

FIGURE A.10.8 Typical Fire Pump Controller and Transfer Switch Arrangements.

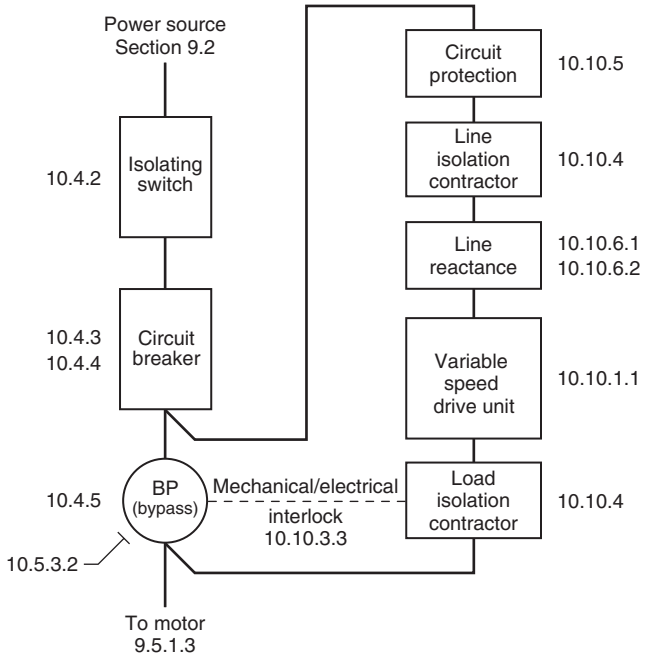

FIGURE A.10.10 Variable Speed Pressure Limiting Control.

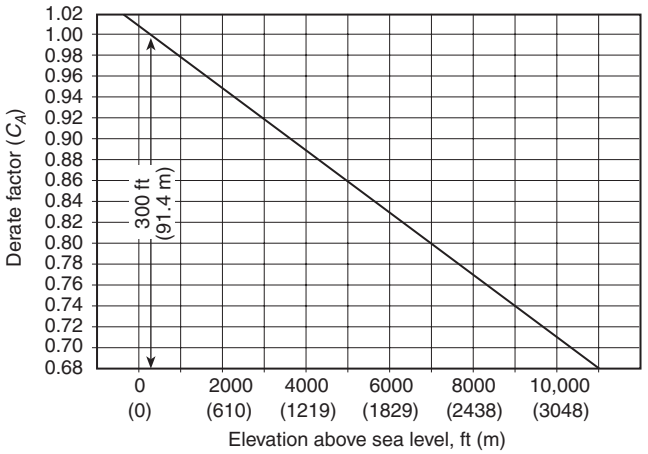

Note: The correction equation is as follows:

Corrected engine horsepower = $(C_A + C_T - 1) \times$ listed engine horsepower

where:

C_A = derate factor for elevation

C_T = derate factor for temperature

FIGURE A.11.2.2.4 Elevation Derate Curve.

power to the VSD since this will damage the VSD, and, more importantly, can cause the fire pump circuit breaker to trip, which takes the pump out of service.

A.10.10.5 The intent is to prevent tripping of the fire pump controller circuit-breaker due to a variable speed drive failure and thus maintain the integrity of the bypass circuit.

A.10.10.6.3 As the motor cable length between the controller and motor increases, the VSD high frequency switching voltage transients at the motor will increase. To prevent the transients from exceeding the motor insulation ratings, the motor manufacturer's recommended cable lengths must be followed.

A.10.10.10.1 This allows for field adjustments to reduce hunting, excessive overshooting, or oscillating.

A.11.1.3 The compression ignition diesel engine has proved to be the most dependable of the internal combustion engines for driving fire pumps.

A.11.2.2.2 For more information, see SAE J-1349, *Engine Power Test Code — Spark Ignition and Compression Engine.*

A.11.2.2.4 See Figure A.11.2.2.4.

A.11.2.2.5 Pump room temperature rise should be considered when determining the maximum ambient temperature specified. *(See Figure A.11.2.2.5.)*

A.11.2.4.8 A harness on the enclosure will ensure ready wiring in the field between the two sets of terminals.

Copyright National Fire Protection Association
Provided by IHS under license with NFPA
No reproduction or networking permitted without license from IHS
Not for Resale

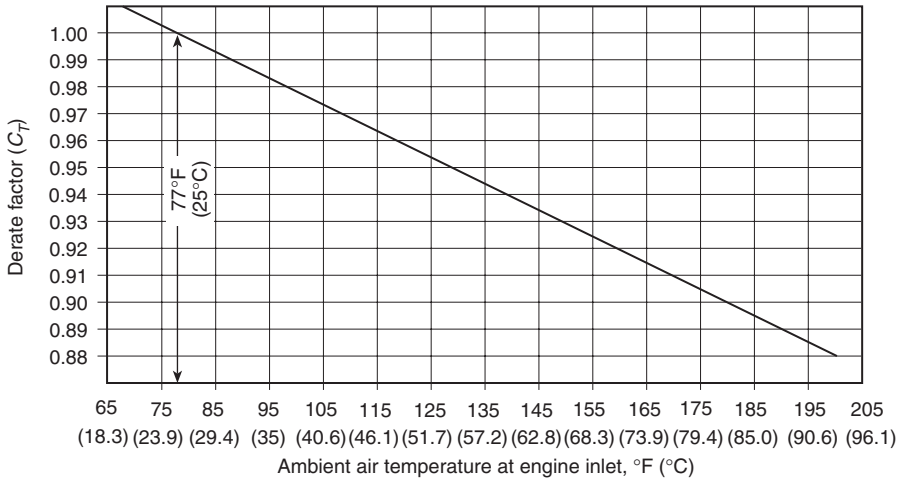

Note: The correction equation is as follows:

Corrected engine horsepower = $(C_A + C_T - 1) \times$ listed engine horsepower

where:

C_A = derate factor for elevation

C_T = derate factor for temperature

FIGURE A.11.2.2.5 Temperature Derate Curve.

A.11.2.4.9 Terminations should be made using insulated ring-type compression connectors for post-type terminal blocks. Saddle-type terminal blocks should have the wire stripped with about 1⁄16 in. (1.6 mm) of bare wire showing after insertion in the saddle, to ensure that no insulation is below the saddle. Wires should be tugged to ensure adequate tightness of the termination.

A.11.2.4.12 Traditionally, engines have been built with mechanical devices to control the injection of fuel into the combustion chamber. To comply with requirements for reduced exhaust emissions, many engine manufacturers have incorporated electronics to control the fuel injection process, thus eliminating levers and linkages. Many of the mechanically controlled engines are no longer manufactured.

A.11.2.4.12.3.3 ECMs can be designed by engine manufacturers to monitor various aspects of engine performance. A stressed engine condition (such as high cooling water temperature) is usually monitored by the ECM and is built into the ECM control logic to reduce the horsepower output of the engine, thus providing a safeguard for the engine. Such engine safeguards are not permitted for ECMs in fire pump engine applications.

A.11.2.5.2.1 Manual mechanical operation of the main battery contactor will bypass all of the control circuit wiring within the controller.

A.11.2.5.2.4 A single charger that automatically alternates from one battery to another can be used on two battery installations.

A.11.2.5.2.6 Location at the side of and level with the engine is recommended to minimize lead length from battery to starter.

A.11.2.5.4.4 Automatic maintenance of air pressure is preferable.

A.11.2.6.3 See Figure A.11.2.6.3. Water supplied for cooling the heat exchanger is sometimes circulated directly through water-jacketed exhaust manifolds and/or engine aftercoolers in addition to the heat exchangers.

A.11.2.6.3.1.4(A) See Figure A.11.2.6.3.1.4(A).

A.11.2.6.3.1.4(B) See Figure A.11.2.6.3.1.4(B).

A.11.2.6.4 Where the water supply can be expected to contain foreign materials, such as wood chips, leaves, lint, and so forth, the strainers required in 11.2.6.3 should be of the duplex filter type. Each filter (clean) element should be of sufficient filtering capacity to permit full water flow for a 3-hour period. In addition, a duplex filter of the same size should be installed in the bypass line. *(See Figure A.11.2.6.3.)*

A.11.3 The engine-driven pump can be located with an electric-driven fire pump(s) in a pump house or pump room that should be entirely cut off from the main structure by noncombustible construction. The fire pump house or pump room can contain facility pumps and/or equipment as determined by the authority having jurisdiction.

A.11.3.2 For optimum room ventilation, the air supply ventilator and air discharge should be located on opposite walls.

When calculating the maximum temperature of the pump room, the radiated heat from the engine, the radiated heat from the exhaust piping, and all other heat-contributing sources should be considered.

If the pump room is to be ventilated by a power ventilator, reliability of the power source during a fire should be considered. If the power source is unreliable, the temperature rise calculation should assume the ventilator is not operable.

Air consumed by the engine for combustion should be considered as part of the air changes in the room.

Copyright National Fire Protection Association
Provided by IHS under license with NFPA
No reproduction or networking permitted without license from IHS
Not for Resale

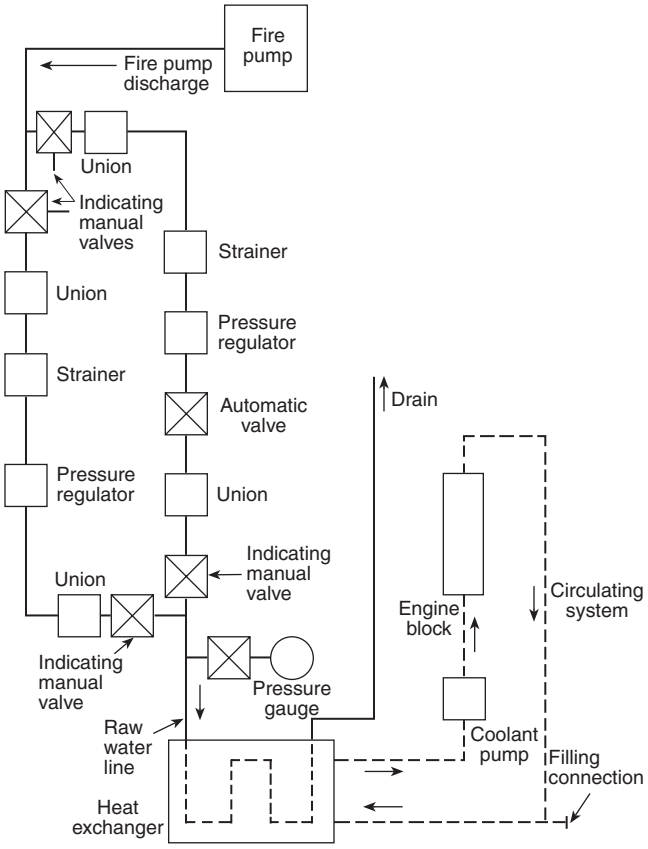

FIGURE A.11.2.6.3 Cooling Water Line with Bypass.

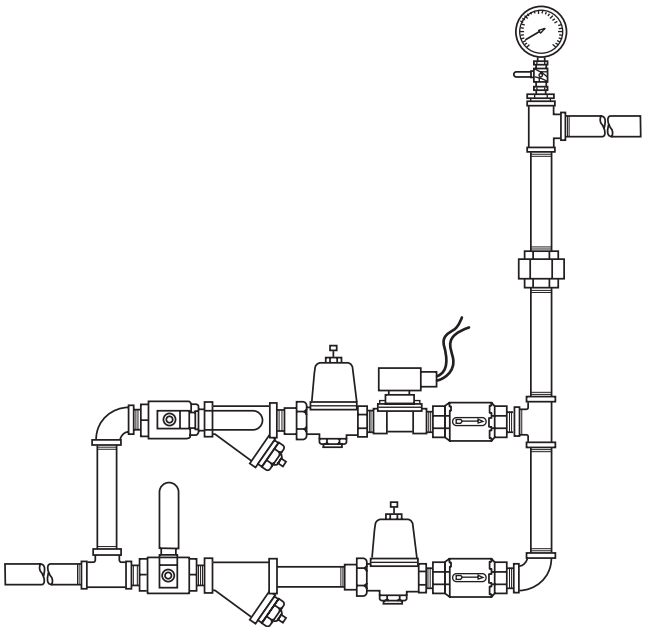

FIGURE A.11.2.6.3.1.4(A) Spring-Loaded Check Valve Arrangement.

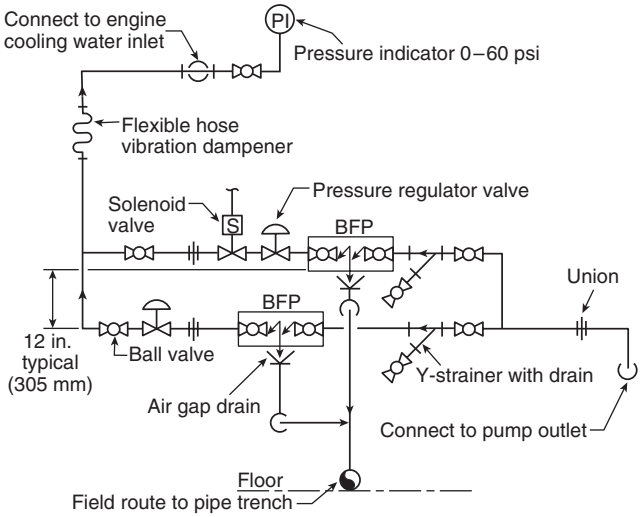

FIGURE A.11.2.6.3.1.4(B) Backflow Preventer Arrangement.

Pump rooms with heat exchanger–cooled engines will typically require more air changes than engine air consumption will provide. To control the temperature rise of the room, additional air flow through the room is normally required. *[See Figure A.11.3.2(a).]*

Pump rooms with radiator-cooled engines could have sufficient air changes due to the radiator discharge and engine consumption. *[See Figure A.11.3.2(b).]*

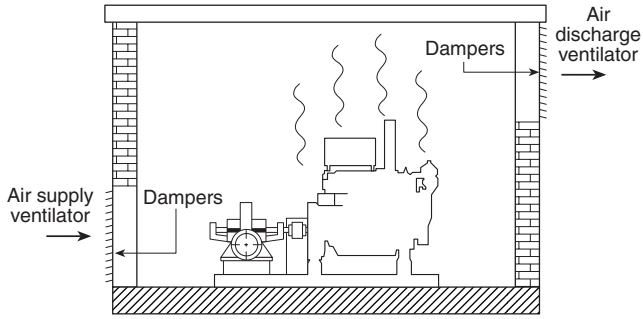

FIGURE A.11.3.2(a) Typical Ventilation System for a Heat Exchanger–Cooled Diesel-Driven Pump.

A.11.3.2.3 When motor-operated dampers are used in the air supply path, they should be spring operated to the open position and motored closed. Motor-operated dampers should be signaled to open when or before the engine begins cranking to start.

The maximum air flow restriction limit for the air supply ventilator is necessary to be compatible with listed engines to ensure adequate air flow for cooling and combustion. This restriction will typically include louvers, bird screen, dampers, duct, or anything in the air supply path between the pump room and the outdoors.

Motor-operated dampers are recommended for the heat exchanger–cooled engines to enhance convection circulation.

Copyright National Fire Protection Association
Provided by IHS under license with NFPA
No reproduction or networking permitted without license from IHS
Not for Resale

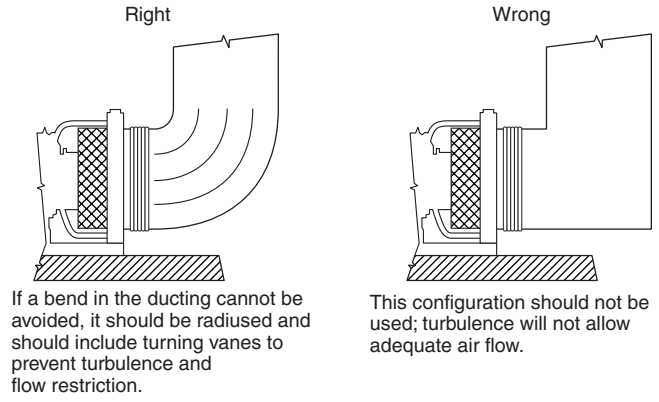

FIGURE A.11.3.2(b) Typical Ventilation System for a Radiator-Cooled Diesel-Driven Pump.

Gravity-operated dampers are recommended for use with radiator-cooled engines to simplify their coordination with the air flow of the fan.

A.11.3.2.4 When motor-operated dampers are used in the air discharge path, they should be spring operated to the open position, motored closed, and signaled to open when or before the engine begins cranking to start.

Prevailing winds can work against the air discharge ventilator. Therefore, the winds should be considered when determining the location for the air discharge ventilator. *(See Figure A.11.3.2.4 for the recommended wind wall design.)*

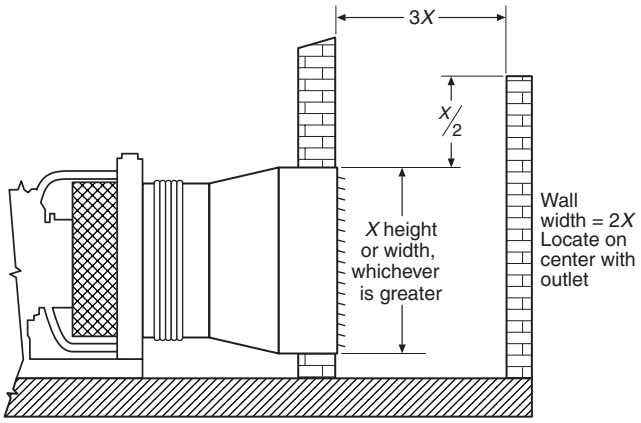

FIGURE A.11.3.2.4 Typical Wind Wall.

For heat exchanger–cooled engines, an air discharge ventilator with motor-driven dampers designed for convection circulation is preferred in lieu of a power ventilator. This arrangement will require the size of the ventilator to be larger, but it is not dependent on a power source that might not be available during the pump operation.

For radiator-cooled engines, gravity-operated dampers are recommended. Louvers and motor-operated dampers are not recommended due to the restriction to air flow they create and the air pressure they must operate against.

The maximum air flow restriction limit for the air discharge ventilator is necessary to be compatible with listed engines to ensure adequate air flow cooling.

A.11.4.2 A means, such as covered floor trough, angle, channel steel, or other adequate protection cover(s) (mechanical or nonmechanical), should be used on all fuel line piping "exposed to traffic," to prevent damage to the fuel supply and return lines between the fuel tank and diesel driver.

A.11.4.3 The quantity 1 gal per hp (5.07 L per kW) is equivalent to 1 pint per hp (0.634 L per kW) per hour for 8 hours. Where prompt replenishment of fuel supply is unlikely, a reserve supply should be provided along with facilities for transfer to the main tanks.

A.11.4.3.1 Where the authority having jurisdiction approves the start of the fire pump on loss of ac power supply, provisions should be made to accommodate the additional fuel needed for this purpose.

A.11.4.5 Diesel fuel storage tanks preferably should be located inside the pump room or pump house, if permitted by local regulations. Fill and vent lines in such case should be extended to outdoors. The fill pipe can be used for a gauging well where practical.

Research has identified nothing in NFPA 30, *Flammable and Combustible Liquids Code*, or NFPA 37, *Standard for the Installation and Use of Stationary Combustion Engines and Gas Turbines*, that prohibits the outlet connection to the engine from the diesel tank from being in the location required by NFPA 20.

The applicable code is NFPA 37, not NFPA 30. The scope of NFPA 30 clearly states that if the installation meets the criteria in NFPA 37, then it satisfies the requirements of NFPA 30.

Therefore, NFPA 37 applies for the fuel tank for the fire pump, as it is considered to be part of the installation of the internal combustion engine. Subsection 6.3.2 of NFPA 37 deals with fuel tanks inside structures for fuels other than Class I liquids. Sections 6.6, 6.7, and 6.8 of NFPA 37 deal with filling, venting, and connections between the engine and the fuel tank, and these sections send the reader back to NFPA 30 for the requirements. In reviewing the tank chapter — Chapter 4 for fixed tanks with capacity of 119 gallons or more — no requirement could be found that states the connection to the engine has to be from the top of the tank, if the tank is on the floor on legs, or otherwise above ground.

A.11.4.6 NFPA 31, *Standard for the Installation of Oil-Burning Equipment*, can be used as a guide for diesel fuel piping. Figure A.11.4.6 shows a suggested diesel engine fuel system.

A.11.4.7 The pour point and cloud point should be at least 10°F (5.6°C) below the lowest expected fuel temperature. *(See 5.12.2 and 11.4.5.)*

Copyright National Fire Protection Association
Provided by IHS under license with NFPA
No reproduction or networking permitted without license from IHS
Not for Resale

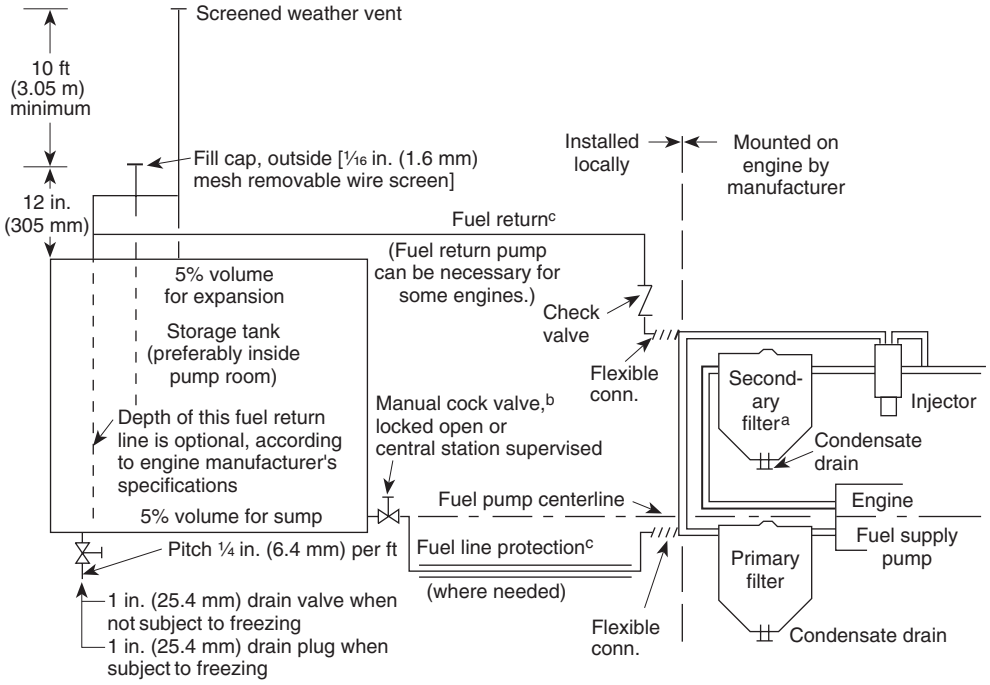

[a]Secondary filter behind or before engine fuel pump, according to engine manufacturer's specifications.
[b]Excess fuel can be returned to fuel supply pump suction, if recommended by engine manufacturer.
[c]Size fuel piping according to engine manufacturer's specifications.

FIGURE A.11.4.6 Fuel System for Diesel Engine–Driven Fire Pump.

A.11.5.3 A conservative guideline is that, if the exhaust system exceeds 15 ft (4.5 m) in length, the pipe size should be increased one pipe size larger than the engine exhaust outlet size for each 5 ft (1.5 m) in added length.

A.11.5.3.11 Exhaust emission after treatment devices are typically dependent upon high exhaust temperature to burn away collected materials to prevent clogging. Due to the lower exhaust temperatures produced by the engine when operating at pump shutoff during weekly operation, there is a high possibility the after treatment device will accumulate collected material and will not be capable of flowing the volume of exhaust in the event the engine is required to produce full rated power for an emergency.

A.11.6 Internal combustion engines necessarily embody moving parts of such design and in such number that the engines cannot give reliable service unless given diligent care. The manufacturer's instruction book covering care and operation should be readily available, and pump operators should be familiar with its contents. All of its provisions should be observed in detail.

A.11.6.2 See NFPA 25, *Standard for the Inspection, Testing, and Maintenance of Water-Based Fire Protection Systems*, for proper maintenance of engine(s), batteries, fuel supply, and environmental conditions.

A.11.6.4 Active systems that are permanently added to fuel tanks for removing water and particulates from the fuel can be acceptable, provided the following apply:

(1) All connections are made directly to the tank and are not interconnected with the engine or its fuel supply and return piping in any way.
(2) There are no valves or other devices added to the engine or its fuel supply and return piping in any way.

A.11.6.5 Proper engine temperature when the engine is not running can be maintained through the circulation of hot water through the jacket or through heating of engine water by electric elements. As a general rule, water heaters and oil heaters are required for diesel engines below 70°F (21°C). The benefits to be gained are as follows:

(1) Quick starting (fire pump engines might have to carry full load as soon as started)
(2) Reduced engine wear
(3) Reduced drain on batteries
(4) Reduced oil dilution
(5) Reduced carbon deposits, so that the engine is far more likely to start every time

A.12.2.1 If the controller must be located outside the pump room, a glazed opening should be provided in the pump room wall for observation of the motor and pump during starting. The pressure control pipeline should be protected against freezing and mechanical injury.

A.12.3.1.1 In areas affected by excessive moisture, heat can be useful in reducing the dampness.

A.12.3.3.1 For more information, see NEMA 250, *Enclosures for Electrical Equipment*.

A.12.3.8 Pump operators should be familiar with instructions provided for controllers and should observe in detail all their recommendations.

Copyright National Fire Protection Association
Provided by IHS under license with NFPA
No reproduction or networking permitted without license from IHS
Not for Resale

A.12.4.1.2 It is recommended that the pilot lamp for signal service have operating voltage less than the rated voltage of the lamp to ensure long operating life. When necessary, a suitable resistor should be used to reduce the voltage for operating the lamp.

A.12.4.2.2(3) The following signals should be monitored remotely from the controller:

(1) A common signal can be used for the following trouble indications: the items in 12.4.1.4(1) through 12.4.1.4(7) and loss of output of battery charger on the load side of the dc overcurrent protective device.
(2) If there is no other way to supervise loss of power, the controller can be equipped with a power failure circuit, which should be time delayed to start the engine upon loss of current output of the battery charger.
(3) The arrangement specified in A.12.4.2.2(3)(2) is only permitted where approved by the authority having jurisdiction in accordance with Section 1.5 and allows, upon loss of the ac power supply, the batteries to maintain their charge, activates ventilation in case conditions require cooling the engine, and/or maintains engine temperature in case conditions require heating the engine. *(See also A.5.6.4 and A.11.4.3.1.)*

A.12.4.4 The pressure recorder should be able to record a pressure at least 150 percent of the pump discharge pressure under no-flow conditions. In a high-rise building, this requirement can exceed 400 psi (27.6 bar). This requirement does not mandate a separate recording device for each controller. A single multichannel recording device can serve multiple sensors.

A.12.5 The following definitions are derived from NFPA 70, *National Electrical Code*.

(1) *Automatic.* Self-acting, operating by its own mechanism when actuated by some impersonal influence (e.g., a change in current strength, pressure, temperature, or mechanical configuration).
(2) *Nonautomatic.* The implied action requires personal intervention for its control. As applied to an electric controller, nonautomatic control does not necessarily imply a manual controller, but only that personal intervention is necessary.

A.12.5.2.1.1 See Figure A.12.5.2.1.1(a) and Figure A.12.5.2.1.1(b).

A.12.5.5.2 Manual shutdown of fire pumps is preferred. Automatic fire pump shutdown can occur during an actual fire condition when relatively low-flow conditions signal the controller that pressure requirements have been satisfied.

A.12.6.9 The pressure recorder should be able to record a pressure at least 150 percent of the pump discharge pressure under no-flow conditions. In a high-rise building, this requirement can exceed 400 psi (27.6 bar). This requirement does not mandate a separate recording device for each controller. A single multichannel recording device can serve multiple sensors.

A.13.1.3 Single-stage turbines of maximum reliability and simplicity are recommended where the available steam supply will permit.

A.13.2.1.1 The casing can be of cast iron.

Some applications can require a turbine-driven fire pump to start automatically but not require the turbine to be on pressure control after starting. In such cases, a satisfactory

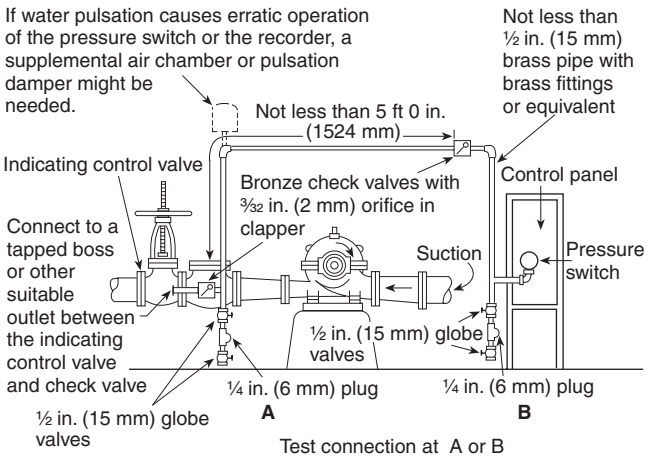

Notes:
(1) Solenoid drain valve used for engine-driven fire pumps can be at A, B, or inside controller enclosure.
(2) If water is clean, ground-face unions with noncorrosive diaphragms drilled for 3/32 in. orifices can be used in place of the check valves.

FIGURE A.12.5.2.1.1(a) Piping Connection for Each Automatic Pressure Switch (for Diesel Fire Pump and Jockey Pumps).

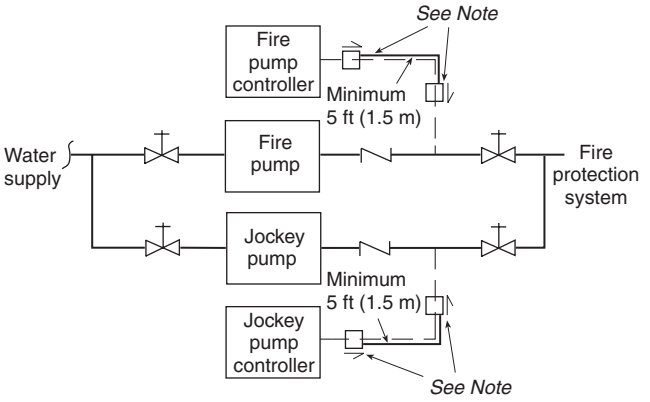

Note: Check valves or ground-face unions complying with 10.5.2.1.

FIGURE A.12.5.2.1.1(b) Piping Connection for Pressure-Sensing Line (Diesel Fire Pump).

quick-opening manual reset valve installed in a bypass of the steam feeder line around a manual control valve can be used.

Where the application requires the pump unit to start automatically and after starting continue to operate by means of a pressure signal, the use of a satisfactory pilot-type pressure control valve is recommended. This valve should be located in the bypass around the manual control valve in the steam feeder line. The turbine governor control valve, when set at approximately 5 percent above the normal full-load speed of the pump under automatic control, would act as a pre-emergency control.

In the arrangements set forth in the two preceding paragraphs, the automatic valve should be located in the bypass around the manual control valve, which would normally be kept in the closed position. In the event of failure of the automatic valve, this manual valve could be opened, allowing the

Copyright National Fire Protection Association
Provided by IHS under license with NFPA
No reproduction or networking permitted without license from IHS
Not for Resale

turbine to come to speed and be controlled by the turbine governor control valve(s).

The use of a direct acting pressure regulator operating on the control valve(s) of a steam turbine is not recommended.

A.13.3 The following information should be taken into consideration when planning a steam supply, exhaust, and boiler feed for a steam turbine–driven fire pump.

The steam supply for the fire pump should preferably be an independent line from the boilers. It should be run so as not to be liable to damage in case of fire in any part of the property. The other steam lines from the boilers should be controlled by valves located in the boiler room. In an emergency, steam can be promptly shut off from these lines, leaving the steam supply entirely available for the fire pump. Strainers in steam lines to turbines are recommended.

The steam throttle at the pump should close against the steam pressure. It should preferably be of the globe pattern with a solid disc. If, however, the valve used has a removable composition ring, the disc should be of bronze and the ring made of sufficiently hard and durable material, and so held in place in the disc as to satisfactorily meet severe service conditions. Gate valves are undesirable for this service because they cannot readily be made leaktight, as is possible with the globe type of valve. The steam piping should be so arranged and trapped that the pipes can be kept free of condensed steam.

In general, a pressure-reducing valve should not be placed in the steam pipe supplying the fire pump. There is no difficulty in designing turbines for modern high-pressure steam, and this gives the simplest and most dependable unit. A pressure-reducing valve introduces a possible obstruction in the steam line in case it becomes deranged. In most cases, the turbines can be protected by making the safety valve required by 13.2.1.2 of such size that the pressure in the casing will not exceed 25 psi (1.7 bar). This valve should be piped outside of the pump room and, if possible, to some point where the discharge could be seen by the pump attendant. Where a pressure-reducing valve is used, the following points should be carefully considered:

(1) *Pressure-Reducing Valve.*
   (a) The pressure-reducing valve should not contain a stuffing box or a piston working in a cylinder.
   (b) The pressure-reducing valve should be provided with a bypass containing a globe valve to be opened in case of an emergency. The bypass and stop valves should be one pipe size smaller than the reducing valve, and they should be located so as to be readily accessible. This bypass should be arranged to prevent the accumulation of condensate above the reducing valve.
   (c) The pressure-reducing valve should be smaller than the steam pipe required by the specifications for the turbine.

(2) *Exhaust Pipe.* The exhaust pipe should run directly to the atmosphere and should not contain valves of any type. It should not be connected with any condenser, heater, or other system of exhaust piping.

(3) *Emergency Boiler Feed.* A convenient method of ensuring a supply of steam for the fire pump unit, in case the usual boiler feed fails, is to provide an emergency connection from the discharge of the fire pump. This connection should have a controlling valve at the fire pump and also, if desired, an additional valve located in the boiler room. A check valve also should be located in this connection, preferably in the boiler room. This emergency connection should be about 2 in. (50 mm) in diameter.

This method should not be used when there is any danger of contaminating a potable water supply. In situations where the fire pump is handling salt or brackish water, it might also be undesirable to make this emergency boiler feed connection. In such situations, an effort should be made to secure some other secondary boiler feed supply that will always be available.

A.14.1.3 See Figure A.14.1.3 for a sample of a contractor's material and test certificate for private fire service mains.

A.14.2.2 In addition, representatives of the installing contractor and owner should be present.

A.14.2.4 If a complete fire pump submittal package is available, it should provide for comparison of the equipment specified. Such a package should include an approved copy of the fire pump room general arrangement drawings, including the electrical layout, the layout of the pump and water source, the layout of the pump room drainage details, the pump foundation layout, and the mechanical layout for heat and ventilation.

A.14.2.7 The fire pump operation is as follows:

(1) *Motor-Driven Pump.* To start a motor-driven pump, the following steps should be taken in the following order:
   (a) See that pump is completely primed.
   (b) Close isolating switch and then close circuit breaker.
   (c) Automatic controller will start pump if system demand is not satisfied (e.g., pressure low, deluge tripped).
   (d) For manual operation, activate switch, pushbutton, or manual start handle. Circuit breaker tripping mechanism should be set so that it will not operate when current in circuit is excessively large.

(2) *Steam-Driven Pump.* A steam turbine driving a fire pump should always be kept warmed up to permit instant operation at full-rated speed. The automatic starting of the turbine should not be dependent on any manual valve operation or period of low-speed operation. If the pop safety valve on the casing blows, steam should be shut off and the exhaust piping examined for a possible closed valve or an obstructed portion of piping. Steam turbines are provided with governors to maintain speed at a predetermined point, with some adjustment for higher or lower speeds. Desired speeds below this range can be obtained by throttling the main throttle valve.

(3) *Diesel Engine–Driven Pump.* To start a diesel engine–driven pump, the operator should be familiar beforehand with the operation of this type of equipment. The instruction books issued by the engine and control manufacturer should be studied to this end. The storage batteries should always be maintained in good order to ensure prompt, satisfactory operation of this equipment (i.e., check electrolyte level and specific gravity, inspect cable conditions, corrosion, etc.).

(4) *Fire Pump Settings.* The fire pump system, when started by pressure drop, should be arranged as follows:
   (a) The jockey pump stop point should equal the pump churn pressure plus the minimum static supply pressure.
   (b) The jockey pump start point should be at least 10 psi (0.68 bar) less than the jockey pump stop point.
   (c) The fire pump start point should be 5 psi (0.34 bar) less than the jockey pump start point. Use 10 psi (0.68 bar) increments for each additional pump.

Copyright National Fire Protection Association
Provided by IHS under license with NFPA
No reproduction or networking permitted without license from IHS
Not for Resale

Contractor's Material and Test Certificate for Private Fire Service Mains

PROCEDURE Upon completion of work, inspection and tests shall be made by the contractor's representative and witnessed by an owner's representative. All defects shall be corrected and system left in service before contractor's personnel finally leave the job.

A certificate shall be filled out and signed by both representatives. Copies shall be prepared for approving authorities, owners, and contractor. It is understood the owner's representative's signature in no way prejudices any claim against contractor for faulty material, poor workmanship, or failure to comply with approving authority's requirements or local ordinances.

PROPERTY NAME		DATE
PROPERTY ADDRESS		
PLANS	ACCEPTED BY APPROVING AUTHORITIES (NAMES)	
	ADDRESS	
	INSTALLATION CONFORMS TO ACCEPTED PLANS	☐ YES ☐ NO
	EQUIPMENT USED IS APPROVED IF NO, STATE DEVIATIONS	☐ YES ☐ NO
INSTRUCTIONS	HAS PERSON IN CHARGE OF FIRE EQUIPMENT BEEN INSTRUCTED AS TO LOCATION OF CONTROL VALVES AND CARE AND MAINTENANCE OF THIS NEW EQUIPMENT? IF NO, EXPLAIN	☐ YES ☐ NO
	HAVE COPIES OF APPROPRIATE INSTRUCTIONS AND CARE AND MAINTENANCE CHARTS BEEN LEFT ON PREMISES? IF NO, EXPLAIN	☐ YES ☐ NO
LOCATION	SUPPLIES BUILDINGS	
PIPES AND JOINTS	PIPE TYPES AND CLASS	TYPE JOINT
	PIPE CONFORMS TO _____ STANDARD FITTINGS CONFORM TO _____ STANDARD IF NO, EXPLAIN	☐ YES ☐ NO ☐ YES ☐ NO
	BURIED JOINTS NEEDING ANCHORAGE CLAMPED, STRAPPED, OR BLOCKED IN ACCORDANCE WITH _____ STANDARD IF NO, EXPLAIN	☐ YES ☐ NO
TEST DESCRIPTION	FLUSHING: Flow the required rate until water is clear as indicated by no collection of foreign material in burlap bags at outlets such as hydrants and blow-offs. Flush at flows not less than 390 gpm (1476 L/min) for 4 in. pipe, 610 gpm (2309 L/min) for 5 in. pipe, 880 gpm (3331 L/min) for 6 in. pipe, 1560 gpm (5905 L/min) for 8 in. pipe, 2440 gpm (9235 L/min) for 10 in. pipe, and 3520 gpm (13323 L/min) for 12 in. pipe. When supply cannot produce stipulated flow rates, obtain maximum available. HYDROSTATIC: Hydrostatic tests shall be made at not less than 200 psi (13.8 bars) for 2 hours or 50 psi (3.4 bars) above static pressure in excess of 150 psi (10.3 bars) for 2 hours. LEAKAGE: New pipe laid with rubber gasketed joints shall, if the workmanship is satisfactory, have little or no leakage at the joints. The amount of leakage at the joints shall not exceed 2 qt/hr (1.89 L/hr) per 100 joints irrespective of pipe diameter. The amount of allowable leakage specified above can be increased by 1 fl oz per inch valve diameter per hour (30 mL/25 mm/hr) for each metal seated valve isolating the test section. If dry barrel hydrants are tested with the main valve open, so the hydrants are under pressure, an additional 5 oz per minute (150 mL/min) leakage is permitted for each hydrant.	
FLUSHING TESTS	NEW PIPING FLUSHED ACCORDING TO _____ STANDARD BY (COMPANY) IF NO, EXPLAIN	☐ YES ☐ NO
	HOW FLUSHING FLOW WAS OBTAINED ☐ PUBLIC WATER ☐ TANK OR RESERVOIR ☐ FIRE PUMP	THROUGH WHAT TYPE OPENING ☐ HYDRANT BUTT ☐ OPEN PIPE
	LEAD-INS FLUSHED ACCORDING TO _____ STANDARD BY (COMPANY) IF NO, EXPLAIN	☐ YES ☐ NO
	HOW FLUSHING FLOW WAS OBTAINED ☐ PUBLIC WATER ☐ TANK OR RESERVOIR ☐ FIRE PUMP	THROUGH WHAT TYPE OPENING ☐ Y CONN. TO FLANGE & SPIGOT ☐ OPEN PIPE

© Copyright National Fire Protection Association (NFPA 20, 1 of 2)

FIGURE A.14.1.3 Sample of Contractor's Material and Test Certificate for Private Fire Service Mains.

Copyright National Fire Protection Association
Provided by IHS under license with NFPA
No reproduction or networking permitted without license from IHS
Not for Resale

HYDROSTATIC TEST	ALL NEW PIPING HYDROSTATICALLY TESTED AT _____ PSI FOR _____ HOURS	BURIED JOINTS COVERED ☐ YES ☐ NO
LEAKAGE TEST	TOTAL AMOUNT OF LEAKAGE MEASURED _____ GALLONS	NO LEAKAGE ALLOWED FOR VISIBLE JOINTS _____ HOURS
	ALLOWABLE LEAKAGE (BURIED) _____ GALLONS	NO LEAKAGE ALLOWED FOR VISIBLE JOINTS _____ HOURS
HYDRANTS	NUMBER INSTALLED	TYPE AND MAKE / ALL OPERATE SATISFACTORILY ☐ YES ☐ NO
CONTROL VALVES	WATER CONTROL VALVES LEFT WIDE OPEN IF NO, STATE REASON	☐ YES ☐ NO
	HOSE THREADS OF FIRE DEPARTMENT CONNECTIONS AND HYDRANTS INTERCHANGEABLE WITH THOSE OF FIRE DEPARTMENT ANSWERING ALARM	☐ YES ☐ NO
REMARKS	DATE LEFT IN SERVICE _____ ADDITIONAL COMMENTS: _____	
SIGNATURES	NAME OF INSTALLING CONTRACTOR	
	TESTS WITNESSED BY	
	FOR PROPERTY OWNER (SIGNED) / TITLE / DATE	
	FOR INSTALLING CONTRACTOR (SIGNED) / TITLE / DATE	
ADDITIONAL EXPLANATION AND NOTES		

© Copyright National Fire Protection Association (NFPA 20, 2 of 2)

FIGURE A.14.1.3 ***Continued***

(d) Where minimum run times are provided, the pump will continue to operate after attaining these pressures. The final pressures should not exceed the pressure rating of the system.
(e) Where the operating differential of pressure switches does not permit these settings, the settings should be as close as equipment will permit. The settings should be established by pressures observed on test gauges.
(f) Examples of fire pump settings follow (for SI units, 1 psi = 0.0689 bar):
  i. Pump: 1000 gpm, 100 psi pump with churn pressure of 115 psi
  ii. Suction supply: 50 psi from city — minimum static; 60 psi from city — maximum static
  iii. Jockey pump stop = 115 psi + 50 psi = 165 psi
  iv. Jockey pump start = 165 psi – 10 psi = 155 psi
  v. Fire pump stop = 115 psi + 50 psi = 165 psi
  vi. Fire pump start = 155 psi – 5 psi = 150 psi
  vii. Fire pump maximum churn = 115 psi + 60 psi = 175 psi
(g) Where minimum-run timers are provided, the pumps will continue to operate at churn pressure beyond the stop setting. The final pressures should not exceed the pressure rating of the system components.

(5) *Automatic Recorder.* The performance of all fire pumps should be automatically indicated on a pressure recorder to provide a record of pump operation and assistance in fire loss investigation.

A.14.2.7.1 The test equipment should be furnished by either the authority having jurisdiction or the installing contractor or the pump manufacturer, depending upon the prevailing arrangements made between the aforementioned parties. The equipment should include, but not necessarily be limited to, the following:

(1) *Equipment for Use with Test Valve Header.* 50 ft (15 m) lengths of 2½ in. (65 mm) lined hose should be provided including Underwriters Laboratories' play pipe nozzles as needed to flow required volume of water. Where test meter is provided, however, these might not be needed.
(2) *Instrumentation.* The following test instruments should be of high quality, accurate, and in good repair:
  (a) Clamp-on volt/ammeter
  (b) Test gauges
  (c) Tachometer
  (d) Pitot tube with gauge (for use with hose and nozzle)

Copyright National Fire Protection Association
Provided by IHS under license with NFPA
No reproduction or networking permitted without license from IHS
Not for Resale

(3) *Instrumentation Calibration.* All test instrumentation should be calibrated by an approved testing and calibration facility within the 12 months prior to the test. Calibration documentation should be available for review by the authority having jurisdiction.

A majority of the test equipment used for acceptance and annual testing has never been calibrated. This equipment can have errors of 15 to 30 percent in readings. The use of uncalibrated test equipment can lead to inaccurately reported test results.

While it is desirable to achieve a true churn condition (no flow) during the test for comparison to the manufacturer's certified pump test characteristic curve, it might not be possible in all circumstances. Pumps with circulation relief valves will discharge a small amount of water, even when no water is flowing into the fire protection system. The small discharge through the circulation relief valve should not be shut off during the test since it is necessary to keep the pump from overheating. For pumps with circulation relief valves, the minimum flow condition in the test is expected to be the situation where no water is flowing to the fire protection system but a small flow is present through the circulation relief valve. During a test on a pump with a pressure relief valve, the pressure relief valve should not open because these valves are installed purely as a safety precaution to prevent overpressurization during overspeed conditions.

Overspeed conditions should not be present during the test, so the pressure relief valve should not open. When pressure relief valves are installed on systems to relieve pressure under normal operating conditions, and if a true churn condition is desired during the acceptance test, the system discharge valve can be closed and the pressure relief valve can be adjusted to eliminate the flow. The pressure readings can be quickly noted and the pressure relief valve adjusted again to allow flow and relief of pressure. After this one-time test, a reference net pressure can be noted with the relief valve open so that the relief valve can remain open during subsequent annual tests with the comparison back to the reference residual net pressure rather than the manufacturer's curve.

A.14.2.7.2.1 Where a hose valve header is used, it should be located where a limited [approximately 100 ft (30 m)] amount of hose is used to discharge water safely.

Where a flow test meter is used in a closed loop according to manufacturer's instructions, additional outlets such as hydrants, hose valves, and so forth should be available to determine the accuracy of the metering device.

A.14.2.7.4 The test procedure is as follows:

(1) Make a visual check of the unit. If hose and nozzles are used, see that they are securely tied down. See that the hose valves are closed. If a test meter is used, the valve on the discharge side of the meter should be closed.
(2) Start the pump.
(3) Partially open one or two hose valves, or slightly open the meter discharge valve.
(4) Check the general operation of the unit. Watch for vibration, leaks (oil or water), unusual noises, and general operation. Adjust packing glands.
(5) Measure water discharge. The steps to do so are as follows:
   (a) Where a test valve header is used, regulate the discharge by means of the hose valves and a selection of the nozzle tips. It will be noticed that the play pipe has a removable tip. This tip has a 1⅛ in. (28.6 mm) nozzle, and when the tip is removed, the play pipe has a 1¾ in. (44.4 mm) nozzle. Hose valves should be shut off before removing or putting on the 1⅛ in. (28.6 mm) tip.
   (b) Where a test meter is used, regulate the discharge valve to achieve various flow readings.
   (c) Important test points are at 150 percent rated capacity, rated capacity, and shutoff. Intermediate points can be taken if desired to help develop the performance curve.
(6) Record the following data at each test point *(see Figure A.14.2.7.4)*:
   (a) Pump rpm
   (b) Suction pressure
   (c) Discharge pressure
   (d) Number and size of hose nozzles, pitot pressure for each nozzle, and total gpm (L/min); for test meter, simply a record of gpm (L/min)
   (e) Amperes (each phase)
   (f) Volts (phase to phase)
(7) Calculation of test results is as follows:
   (a) *Rated Speed.* Determine that pump is operating at rated rpm.
   (b) *Capacity.* For hose valve header, using a fire stream table, determine the gpm (L/min) for each nozzle at each pitot reading. For example, 16 psi (1.1 bar) pitot pressure with 1¾ in. (44.4 mm) nozzle indicates 364 gpm (1378 L/min). Add the gpm for each hose line to determine total volume. For test meter, the total gpm (L/min) is read directly.
   (c) *Total Head for Horizontal Pump.* Total head is the sum of the following:
      i. Pressure measured by the discharge gauge at pump discharge flange
      ii. Velocity head difference, pump discharge, and pump suction
      iii. Gauge elevation corrections to pump centerline (plus or minus)
      iv. Pressure measured by suction gauge at pump suction flange — negative value when pressure is above zero
   (d) *Total Head for Vertical Pump.* Total head is the sum of the following:
      i. Pressure measured by the discharge gauge at pump discharge flange
      ii. Velocity head at the discharge
      iii. Distance to the supply water level
      iv. Discharge gauge elevation correction to centerline of discharge
   (e) *Electrical Input.* Voltage and amperes are read directly from the volt/ammeter. This reading is compared to the motor nameplate full-load amperes. The only general calculation is to determine the maximum amperes allowed due to the motor service factor. In the case of 1.15 service factor, the maximum amperes are approximately 1.15 times motor amperes, because changes in power factor and efficiency are not considered. If the maximum amperes recorded on the test do not exceed this figure, the motor and pump will be judged satisfactory. It is most important to measure voltage and amperes accurately on each phase should the maximum amperes logged on the test exceed the calculated maximum amperes. This measurement is important because a poor power supply with low voltage will cause a high ampere reading. This condition can be corrected only by improvement in the power supply. There is nothing that can be done to the motor or the pump.

Copyright National Fire Protection Association
Provided by IHS under license with NFPA
No reproduction or networking permitted without license from IHS
Not for Resale

Centrifugal Fire Pump Acceptance Test Form

NATIONAL FIRE SPRINKLER ASSOCIATION, INC

Information on this form covers the minimum requirements of NFPA 20-2007 for performing acceptance tests on pumps with electric motors or diesel engine drivers. Other forms are available for periodic inspection, testing and maintenance.

Owner: _____
Owner's Address: _____
_____
Property on which pump is installed: _____
_____
Property Address: _____
_____
Date of Test: _____
Demand(s) of Fire Protection Systems Supplied By Pump: _____
_____
Pump: ❑ Horizontal ❑ Vertical
Manufacturer: _____ Shop/Serial Number: _____
Model or Type: _____
Rated GPM _____ Rated Pressure _____ Rated RPM _____
Suction From _____ If Tank, Size and Height _____
Driver: ❑ Electric Motor ❑ Diesel Engine ❑ Steam Turbine
Manufacturer: _____ Shop/Serial Number: _____
Model or Type: _____
Rated Horsepower: _____ Rated Speed: _____
If Electric Motor, Rated Voltage_____ Operating Voltage_____
Rated Amps_____ Phase Cycles_____ Service Factor_____
Controller Manufacturer: _____
Shop/Serial Number: _____ Model or Type: _____
Jockey Pump on System? ❑ Yes ❑ No Settings: On____ Off____

Note: All questions are to be answered Yes, No or Not Applicable.
All "No" answers are to be explained in the comments portion of this form.

I. Flush Test *(Conduct before Hydrostatic Test)*
Suction piping was flushed at _____ gpm? ❑ Yes ❑ No ❑ N/A
(See Table 14.1.1.1(a) of NFPA 20.)
Certificate presented showing flush test? ❑ Yes ❑ No ❑ N/A

II. Hydrostatic Test
Piping tested at _____ psi for 2 hours? ❑ Yes ❑ No ❑ N/A
(Note: NFPA 20 requires 200 psi or 50 psi above maximum system pressure whichever is greater.)
Piping passed test? ❑ Yes ❑ No ❑ N/A
Certificate presented showing test? ❑ Yes ❑ No ❑ N/A

III. People Present
Were the following present to witness the test:
A. Pump manufacturer/representative ❑ Yes ❑ No ❑ N/A
B. Engine manufacturer/representative ❑ Yes ❑ No ❑ N/A
C. Controller manufacturer/representative ❑ Yes ❑ No ❑ N/A
D. Transfer switch manufacturer/rep. ❑ Yes ❑ No ❑ N/A
E. Authority having jurisdiction/rep. ❑ Yes ❑ No ❑ N/A

IV. Electric Wiring
Was all electric wiring including control interwiring for multiple pumps, emergency power supply, and the jockey pump completed and checked by the electrical contractor prior to the initial start-up and acceptance test? ❑ Yes ❑ No ❑ N/A

V. Flow Test
Run the pump at no-load, rated load and peak load (usually 150% of rated load) conditions. For variable speed drivers, run the test with the pressure limiting control "on" and then again at rated speed with the pump isolated from the fire protection system and the relief valve closed.

A. Was a copy of the manufacturers' certified pump test characteristic curve available for comparison to the results of the acceptance test? ❑ Yes ❑ No ❑ N/A
B. Equipment and gages calibrated? ❑ Yes ❑ No ❑ N/A
C. No vibrations that could potentially damage any fire pump component? ❑ Yes ❑ No ❑ N/A
D. The fire pump performed at all conditions without objectionable overheating of any component? ❑ Yes ❑ No ❑ N/A

E. For each test, record the following for each load condition:

Test	Driver Speed	Suction Pressure	Discharge Pressure	Nozzle Size	Pitot Readings or Flow					
	rpm	psi	psi	inch	1	2	3	4	5	6
0										
100%										
150%										

F. For electric motor driven pumps also record:

Test	Voltage	Amperes
0		
100%		
150%		

E. For each test, record the following for each load condition:

$P_{Net} = P_{Discharge} - P_{Suction}$ $\quad Q = 29.83\ cd^2\sqrt{P}$

Test	Net Pressure	Flow						Total Flow
		1	2	3	4	5	6	
0		0	0	0	0	0	0	0
100%								
150%								

H. For electric motors operating at rated voltage and frequency, is the ampere demand less than or equal to the product of the full load ampere rating times the allowable service factor as stamped on the motor nameplate? ❑ Yes ❑ No ❑ N/A
I. For electric motors operating under varying voltage:
1. Was the product of the actual voltage and current demand less than or equal to the product of the rated full load current times the rated voltage times the allowable service factor? ❑ Yes ❑ No ❑ N/A
2. Was the voltage always less than 5% below the rated voltage during the test? ❑ Yes ❑ No ❑ N/A
3. Was the voltage always less than 10% above the rated voltage during the test? ❑ Yes ❑ No ❑ N/A
J. Did engine-driven units show no signs of overload or stress? ❑ Yes ❑ No ❑ N/A
K. Was the governor set to properly regulate the engine speed at rated pump speed? ❑ Yes ❑ No ❑ N/A
L. Did the gear drive assembly operate without excessive objectionable noise, vibration or heating? ❑ Yes ❑ No ❑ N/A
M. Was the fire pump unit started and brought up to rated speed without interruption under the conditions of a discharge equal to peak load? ❑ Yes ❑ No ❑ N/A
N. Did the fire pump perform equal to the manufacturer's characteristic curve within the accuracy limits of the test equipment? ❑ Yes ❑ No ❑ N/A
O. Electric motor pumps passed phase reversal test on normal and alternate (if provided) power? ❑ Yes ❑ No ❑ N/A

SAMPLE

© 2005 National Fire Sprinkler Association, P.O. Box 1000, Patterson, NY 12563 (845) 878-4200 (used with permission) Form 20-A Sheet 1 of 2

FIGURE A.14.2.7.4 Centifugal Fire Pump Acceptance Test Form. *(Courtesy of National Fire Sprinkler Association, Inc.)*

Copyright National Fire Protection Association
Provided by IHS under license with NFPA
No reproduction or networking permitted without license from IHS
Not for Resale

VI. Controller Test

A. Did the pump start at least 6 times from automatic sources? ❑ Yes ❑ No ❑ N/A

B. Was each automatic starting feature tested at least once? ❑ Yes ❑ No ❑ N/A

C. Did the pump start at least 6 times manually? ❑ Yes ❑ No ❑ N/A

D. Was the pump run for at least 5 minutes during each of the operations in Parts A, B and C above? ❑ Yes ❑ No ❑ N/A

(Note: An engine driver is not required to run for 5 minutes at full speed between successive starts until the cumulative cranking time of successive starts reaches 45 seconds.)

E. Were the starting operations divided between both sets of batteries for engine-driven controllers? ❑ Yes ❑ No ❑ N/A

F. Electric Driven Pump Controllers

1. Were all overcurrent protective devices (including the controller circuit-breaker) selected, sized and set in accordance with NFPA 20? ❑ Yes ❑ No ❑ N/A
2. Was the fire pump started at least once from each power service and run for at least 5 minutes? ❑ Yes ❑ No ❑ N/A
3. Upon simulation of a power failure, while the pump is operating at peak load, did the transfer switch transfer from the normal to the emergency source without opening overcurrent protection devices on either line? ❑ Yes ❑ No ❑ N/A
4. When normal power was restored, did retransfer from emergency to normal power occur without overcurrent protection devices opening on either line? ❑ Yes ❑ No ❑ N/A
5. Were at least half of the automatic and manual starts required by Parts A and C performed with the pump connected to the alternate source? ❑ Yes ❑ No ❑ N/A

G. Were all signal conditions simulated demonstrating satisfactory operation? ❑ Yes ❑ No ❑ N/A

H. Was the pump run for at least 1 hour total during all of the above tests? ❑ Yes ❑ No ❑ N/A

I. For engines with ECM fuel management

VIII. Tester Information

Tester: _____

Company: _____

Company Address: _____

I state that the information on this form is correct at the time and place of my test, and that all equipment tested was left in operational condition upon completion of this test except as noted in the comments section below.

Signature of Tester: _____ Date: _____

License or Certification Number if Applicable: _____

IX. Comments

(Any "No" answers, test failures, or other problems must be explained

SAMPLE

Pump Test Results

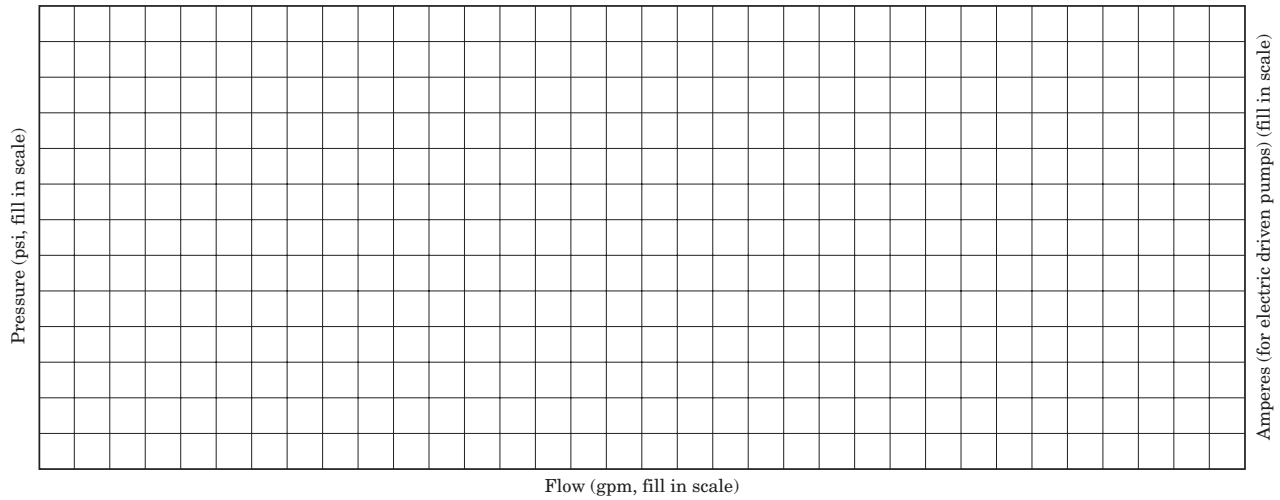

© 2005 National Fire Sprinkler Association, P.O. Box 1000, Patterson, NY 12563 (845) 878-4200 (used with permission) **Form 20-A Sheet 2 of 2**

FIGURE A.14.2.7.4 ***Continued***

Copyright National Fire Protection Association
Provided by IHS under license with NFPA
No reproduction or networking permitted without license from IHS
Not for Resale

(f) *Correction to Rated Speed.* For purposes of plotting, the capacity, head, and power should be corrected from the test values at test speed to the rated speed of the pump. The corrections are made as follows.

Capacity:

$$Q_2 = \left(\frac{N_2}{N_1}\right) Q_1$$

where:
Q_1 = capacity at test speed in gpm (L/min)
Q_2 = capacity at rated speed in gpm (L/min)
N_1 = test speed in rpm
N_2 = rated speed in rpm

Head:

$$H_2 = \left(\frac{N_2}{N_1}\right)^2 H_1$$

where:
H_1 = head at test speed in ft (m)
H_2 = head at rated speed in ft (m)

Horsepower:

$$hp_2 = \left(\frac{N_2}{N_1}\right)^3 hp_1$$

where:
hp_1 = kW (horsepower) at test speed
hp_2 = kW (horsepower) at rated speed

(g) *Conclusion.* The final step in the test calculation is generally a plot of test points. A head-capacity curve is plotted, and an ampere-capacity curve is plotted. A study of these curves will show the performance picture of the pump as it was tested.

A.14.2.7.6 A simulated test of the phase reversal device is an acceptable test method.

A.14.2.8.1 All controller starts required for tests described in 14.2.7 through 14.2.10 should accrue respectively to this number of tests.

A.14.2.13 To verify the operation of the alternate ECM, with the motor stopped, move the ECM selector switch to the alternate ECM position. Repositioning of the selector switch should cause a signal on the fire pump controller. Start the engine; it should operate normally with all functions. Shut engine down, switch back to the primary ECM, and restart the engine briefly to verify that correct switchback has been accomplished.

To verify the operation of the redundant sensor, with the engine running, disconnect the wires from the primary sensor. There should be no change in the engine operation. Reconnect the wires to the sensor. Next, disconnect the wires from the redundant sensor. There should be no change in the engine operation. Reconnect the wires to the sensor. Repeat this process for all primary and redundant sensors on the engines. *Note:* If desired, the disconnecting and reconnecting of wires to the sensors can be done while the engine is not running, then starting the engine after each disconnection and reconnection of the wires to verify engine operation.

Annex B Possible Causes of Pump Troubles

This annex is not a part of the requirements of this NFPA document but is included for informational purposes only.

B.1 Causes of Pump Troubles. This annex contains a partial guide for locating pump troubles and their possible causes *(see Figure B.1)*. It also contains a partial list of suggested remedies. *(For other information on this subject, see Hydraulics Institute Standards for Centrifugal, Rotary and Reciprocating Pumps.)*

The causes listed here are in addition to possible mechanical breakage that would be obvious on visual inspection. In case of trouble, it is suggested that those troubles that can be checked easily should be corrected first or eliminated as possibilities.

B.1.1 Air Drawn into Suction Connection Through Leak(s). Air drawn into suction line through leaks causes a pump to lose suction or fail to maintain its discharge pressure. Uncover suction pipe and locate and repair leak(s).

B.1.2 Suction Connection Obstructed. Examine suction intake, screen, and suction pipe and remove obstruction. Repair or provide screens to prevent recurrence. *(See 5.14.8.)*

B.1.3 Air Pocket in Suction Pipe. Air pockets cause a reduction in delivery and pressure similar to an obstructed pipe. Uncover suction pipe and rearrange to eliminate pocket. *(See 5.14.6.)*

B.1.4 Well Collapsed or Serious Misalignment. Consult a reliable well drilling company and the pump manufacturer regarding recommended repairs.

B.1.5 Stuffing Box Too Tight or Packing Improperly Installed, Worn, Defective, Too Tight, or of Incorrect Type. Loosen gland swing bolts and remove stuffing box gland halves. Replace packing.

B.1.6 Water Seal or Pipe to Seal Obstructed. Loosen gland swing bolt and remove stuffing box gland halves along with the water seal ring and packing. Clean the water passage to and in the water seal ring. Replace water seal ring, packing gland, and packing in accordance with manufacturer's instructions.

B.1.7 Air Leak into Pump Through Stuffing Boxes. Same as the possible cause in B.1.6.

B.1.8 Impeller Obstructed. Does not show on any one instrument, but pressures fall off rapidly when an attempt is made to draw a large amount of water.

For horizontal split-case pumps, remove upper case of pump and remove obstruction from impeller. Repair or provide screens on suction intake to prevent recurrence.

For vertical shaft turbine–type pumps, lift out column pipe *(see Figure A.7.2.2.1 and Figure A.7.2.2.2)* and pump bowls from wet pit or well and disassemble pump bowl to remove obstruction from impeller.

For close-coupled, vertical in-line pumps, lift motor on top pull-out design and remove obstruction from impeller.

B.1.9 Wearing Rings Worn. Remove upper case and insert feeler gauge between case wearing ring and impeller wearing ring. Clearance when new is 0.0075 in. (0.19 mm). Clearances of more than 0.015 in. (0.38 mm) are excessive.

B.1.10 Impeller Damaged. Make minor repairs or return to manufacturer for replacement. If defect is not too serious, order new impeller and use damaged one until replacement arrives.

B.1.11 Wrong Diameter Impeller. Replace with impeller of proper diameter.

--`,,```,,,,````-`-`,,`,,`,`,,`---

Copyright National Fire Protection Association
Provided by IHS under license with NFPA
No reproduction or networking permitted without license from IHS
Not for Resale

	Suction				Pump															Driver and/or Pump					Driver						
Fire pump Troubles	Air drawn into suction connection through leak(s)	Suction connection obstructed	Air pocket in suction pipe	Well collapsed or serious misalignment	Stuffing box too tight or packing improperly installed, worn, defective, too tight, or incorrect type	Water seal or pipe to seal obstructed	Air leak into pump through stuffing boxes	Impeller obstructed	Wearing rings worn	Impeller damaged	Wrong diameter impeller	Actual net head lower than rated	Casing gasket defective, permitting internal leakage (single-stage and multistage pumps)	Pressure gauge is on top of pump casing	Incorrect impeller adjustment (vertical shaft turbine-type pump only)	Impellers locked	Pump is frozen	Pump shaft or shaft sleeve scored, bent, or worn	Pump not primed	Seal ring improperly located in stuffing box, preventing water from entering space to form seal	Excess bearing friction due to lack of lubrication, wear, dirt, rusting, failure, or improper installation	Rotating element binds against stationary element	Pump and driver misaligned	Foundation not rigid	Engine-cooling system obstructed	Faulty driver	Lack of lubrication	Speed too low	Wrong direction of rotation	Speed too high	Rated motor voltage different from line voltage	Faulty electric circuit, obstructed fuel system, obstructed steam pipe, or dead battery
	1	2	3	4	5	6	7	8	9	10	11	12	13	14	15	16	17	18	19	20	21	22	23	24	25	26	27	28	29	30	31	32
Excessive leakage at stuffing box					X													X					X								
Pump or driver overheats				X	X	X		X			X				X			X	X	X	X	X	X	X	X	X		X		X	X	X	
Pump unit will not start				X	X										X	X	X				X					X	X					X
No water discharge	X	X	X					X											X													
Pump is noisy or vibrates				X	X			X		X								X			X	X	X	X			X					
Too much power required				X	X			X	X		X		X		X			X			X	X	X	X			X		X	X	X	
Discharge pressure not constant for same gpm	X				X	X	X																									
Pump loses suction after starting	X	X	X			X	X													X												
Insufficient water discharge	X	X	X			X	X	X	X	X	X	X	X		X													X	X		X	
Discharge pressure too low for gpm discharge	X	X	X		X	X	X	X	X	X	X	X	X	X														X	X		X	

FIGURE B.1 Possible Causes of Fire Pump Troubles.

B.1.12 Actual Net Head Lower than Rated. Check impeller diameter and number and pump model number to make sure correct head curve is being used.

B.1.13 Casing Gasket Defective, Permitting Internal Leakage (Single-Stage and Multistage Pumps). Replace defective gasket. Check manufacturer's drawing to see whether gasket is required.

B.1.14 Pressure Gauge Is on Top of Pump Casing. Place gauges in correct location. *(See Figure A.6.3.1.)*

B.1.15 Incorrect Impeller Adjustment (Vertical Shaft Turbine–Type Pump Only). Adjust impellers according to manufacturer's instructions.

B.1.16 Impellers Locked. For vertical shaft turbine–type pumps, raise and lower impellers by the top shaft adjusting nut. If this adjustment is not successful, follow the manufacturer's instructions.

For horizontal split-case pumps, remove upper case and locate and eliminate obstruction.

B.1.17 Pump Is Frozen. Provide heat in the pump room. Disassemble pump and remove ice as necessary. Examine parts carefully for damage.

B.1.18 Pump Shaft or Shaft Sleeve Scored, Bent, or Worn. Replace shaft or shaft sleeve.

B.1.19 Pump Not Primed. If a pump is operated without water in its casing, the wearing rings are likely to seize. The first warning is a change in pitch of the sound of the driver. Shut down the pump.

Copyright National Fire Protection Association
Provided by IHS under license with NFPA
No reproduction or networking permitted without license from IHS
Not for Resale

For vertical shaft turbine–type pumps, check water level to determine whether pump bowls have proper submergence.

B.1.20 Seal Ring Improperly Located in Stuffing Box, Preventing Water from Entering Space to Form Seal. Loosen gland swing bolt and remove stuffing box gland halves along with the water-seal ring and packing. Replace, putting seal ring in proper location.

B.1.21 Excess Bearing Friction Due to Lack of Lubrication, Wear, Dirt, Rusting, Failure, or Improper Installation. Remove bearings and clean, lubricate, or replace as necessary.

B.1.22 Rotating Element Binding Against Stationary Element. Check clearances and lubrication and replace or repair the defective part.

B.1.23 Pump and Driver Misaligned. Shaft running off center because of worn bearings or misalignment. Align pump and driver according to manufacturer's instructions. Replace bearings according to manufacturer's instructions. *(See Section 6.5.)*

B.1.24 Foundation Not Rigid. Tighten foundation bolts or replace foundation if necessary. *(See Section 6.4.)*

B.1.25 Engine Cooling System Obstructed. Heat exchanger or cooling water systems too small or cooling pump faulty. Remove thermostats. Open bypass around regulator valve and strainer. Check regulator valve operation. Check strainer. Clean and repair if necessary. Disconnect sections of cooling system to locate and remove possible obstruction. Adjust engine cooling water circulating pump belt to obtain proper speed without binding. Lubricate bearings of this pump.

If overheating still occurs at loads up to 150 percent of rated capacity, contact pump or engine manufacturer so that necessary steps can be taken to eliminate overheating.

B.1.26 Faulty Driver. Check electric motor, internal combustion engine, or steam turbine, in accordance with manufacturer's instructions, to locate reason for failure to start.

B.1.27 Lack of Lubrication. If parts have seized, replace damaged parts and provide proper lubrication. If not, stop pump and provide proper lubrication.

B.1.28 Speed Too Low. For electric motor drive, check that rated motor speed corresponds to rated speed of pump, voltage is correct, and starting equipment is operating properly.

Low frequency and low voltage in the electric power supply prevent a motor from running at rated speed. Low voltage can be due to excessive loads and inadequate feeder capacity or (with private generating plants) low generator voltage. The generator voltage of private generating plants can be corrected by changing the field excitation. When low voltage is from the other causes mentioned, it might be necessary to change transformer taps or increase feeder capacity.

Low frequency usually occurs with a private generating plant and should be corrected at the source. Low speed can result in older type squirrel-cage-type motors if fastenings of copper bars to end rings become loose. The remedy is to weld or braze these joints.

For steam turbine drive, check that valves in steam supply pipe are wide open; boiler steam pressure is adequate; steam pressure is adequate at the turbine; strainer in the steam supply pipe is not plugged; steam supply pipe is of adequate size; condensate is removed from steam supply pipe, trap, and turbine; turbine nozzles are not plugged; and setting of speed and emergency governor is correct.

For internal combustion engine drive, check that setting of speed governor is correct; hand throttle is opened wide; and there are no mechanical defects such as sticking valves, timing off, or spark plugs fouled, and so forth. These problems might require the services of a trained mechanic.

B.1.29 Wrong Direction of Rotation. Instances of an impeller turning backward are rare but are clearly recognizable by the extreme deficiency of pump delivery. Wrong direction of rotation can be determined by comparing the direction in which the flexible coupling is turning with the directional arrow on the pump casing.

With a polyphase electric motor drive, two wires must be reversed; with a dc driver, the armature connections must be reversed with respect to the field connections. Where two sources of electrical current are available, the direction of rotation produced by each should be checked.

B.1.30 Speed Too High. See that pump- and driver-rated speed correspond. Replace electric motor with one of correct rated speed. Set governors of drivers for correct speed. Frequency at private generating stations might be too high.

B.1.31 Rated Motor Voltage Different from Line Voltage. For example, a 220 V or 440 V motor on 208 V or 416 V line. Obtain motor of correct rated voltage or larger size motor. *(See Section 9.4.)*

B.1.32 Faulty Electric Circuit, Obstructed Fuel System, Obstructed Steam Pipe, or Dead Battery. Check for break in wiring open switch, open circuit breaker, or dead battery. If circuit breaker in controller trips for no apparent reason, make sure oil is in dash pots in accordance with manufacturer's specifications. Make sure fuel pipe is clear, strainers are clean, and control valves are open in fuel system to internal combustion engine. Make sure all valves are open and strainer is clean in steam line to turbine.

B.2 Warning. Chapters 9 and 10 include electrical requirements that discourage the installation of disconnect means in the power supply to electric motor–driven fire pumps. This requirement is intended to ensure the availability of power to the fire pumps. When equipment connected to those circuits is serviced or maintained, the employee can have unusual exposure to electrical and other hazards. It can be necessary to require special safe work practices and special safeguards, personal protective clothing, or both.

B.3 Maintenance of Fire Pump Controllers After a Fault Condition.

B.3.1 Introduction. In a fire pump motor circuit that has been properly installed, coordinated, and in service prior to the fault, tripping of the circuit breaker or the isolating switch indicates a fault condition in excess of operating overload.

It is recommended that the following general procedures be observed by qualified personnel in the inspection and repair of the controller involved in the fault. These procedures are not intended to cover other elements of the circuit, such as wiring and motor, which can also require attention.

B.3.2 Caution. All inspections and tests are to be made on controllers that are de-energized at the line terminal, disconnected, locked out, and tagged so that accidental contact cannot be made with live parts and so that all plant safety procedures will be observed.

B.3.2.1 Enclosure. Where substantial damage to the enclosure, such as deformation, displacement of parts, or burning has occurred, replace the entire controller.

Copyright National Fire Protection Association
Provided by IHS under license with NFPA
No reproduction or networking permitted without license from IHS
Not for Resale

B.3.2.2 Circuit Breaker and Isolating Switch. Examine the enclosure interior, circuit breaker, and isolating switch for evidence of possible damage. If evidence of damage is not apparent, the circuit breaker and isolating switch can continue to be used after closing the door.

If there is any indication that the circuit breaker has opened several short-circuit faults, or if signs of possible deterioration appear within either the enclosure, circuit breaker, or isolating switch (e.g., deposits on surface, surface discoloration, insulation cracking, or unusual toggle operation), replace the components. Verify that the external operating handle is capable of opening and closing the circuit breaker and isolating switch. If the handle fails to operate the device, this would also indicate the need for adjustment or replacement.

B.3.2.3 Terminals and Internal Conductors. Where there are indications of arcing damage, overheating, or both, such as discoloration and melting of insulation, replace the damaged parts.

B.3.2.4 Contactor. Replace contacts showing heat damage, displacement of metal, or loss of adequate wear allowance of the contacts. Replace the contact springs where applicable. If deterioration extends beyond the contacts, such as binding in the guides or evidence of insulation damage, replace the damaged parts or the entire contactor.

B.3.2.5 Return to Service. Before returning the controller to service, check for the tightness of electrical connections and for the absence of short circuits, ground faults, and leakage current.

Close and secure the enclosure before the controller circuit breaker and isolating switch are energized. Follow operating procedures on the controller to bring it into standby condition.

Annex C Informational References

C.1 Referenced Publications. The documents or portions thereof listed in this annex are referenced within the informational sections of this standard and are not part of the requirements of this document unless also listed in Chapter 2 for other reasons.

C.1.1 NFPA Publications. National Fire Protection Association, 1 Batterymarch Park, Quincy, MA 02169-7471.

NFPA 13, *Standard for the Installation of Sprinkler Systems*, 2007 edition.

NFPA 14, *Standard for the Installation of Standpipe and Hose Systems*, 2007 edition.

NFPA 15, *Standard for Water Spray Fixed Systems for Fire Protection*, 2001 edition.

NFPA 16, *Standard for the Installation of Foam-Water Sprinkler and Foam-Water Spray Systems*, 2003 edition.

NFPA 24, *Standard for the Installation of Private Fire Service Mains and Their Appurtenances*, 2007 edition.

NFPA 25, *Standard for the Inspection, Testing, and Maintenance of Water-Based Fire Protection Systems*, 2002 edition.

NFPA 30, *Flammable and Combustible Liquids Code*, 2003 edition.

NFPA 31, *Standard for the Installation of Oil-Burning Equipment*, 2006 edition.

NFPA 37, *Standard for the Installation and Use of Stationary Combustion Engines and Gas Turbines*, 2006 edition.

NFPA 70, *National Electrical Code®*, 2005 edition.

C.1.2 Other Publications.

C.1.2.1 ANSI Publications. American National Standards Institute, Inc., 25 West 43rd Street, 4th Floor, New York, NY 10036.

ANSI/IEEE C62.11, *IEEE Standard for Metal-Oxide Surge Arresters for AC Power Circuits,* 1987.

C.1.2.2 ANSI/UL Publications. Underwriters Laboratories Inc., 333 Pfingsten Road, Northbrook, IL 60062-2096.

ANSI/UL 509, *Standard for Safety Industrial Control Equipment*, 1989.

ANSI/UL 1008, *Standard for Safety Automatic Transfer Switches*, 1989.

C.1.2.3 AWWA Publications. American Water Works Association, 6666 West Quincy Avenue, Denver, CO 80235.

AWWA C104, *Cement-Mortar Lining for Cast-Iron and Ductile-Iron Pipe and Fittings for Water*, 1990.

C.1.2.4 HI Publications. Hydraulics Institute, 1230 Keith Building, Cleveland, OH 44115.

Hydraulics Institute Standards for Centrifugal, Rotary and Reciprocating Pumps, 14th ed., 1983.

HI 3.5, *Standard for Rotary Pumps for Nomenclature, Design, Application and Operation,* 1994.

HI 3.6, *Rotary Pump Tests,* 1994.

C.1.2.5 IEEE Publications. Institute of Electrical and Electronics Engineers, Three Park Avenue, 17th Floor, New York, NY 10016-5997.

IEEE 141, *Electric Power Distribution for Industrial Plants*, 1986.

IEEE 241, *Electric Systems for Commercial Buildings*, 1990.

C.1.2.6 NEMA Publications. National Electrical Manufacturers Association, 1300 North 17th Street, Suite 1847, Rosslyn, VA 22209.

NEMA Industrial Control and Systems Standards, ICS 2.2, *Maintenance of Motor Controllers After a Fault Condition*, 1983.

NEMA ICS 14, *Application Guide for Electric Pump Controllers*, 2001.

NEMA 250, *Enclosures for Electrical Equipment*, 1991.

C.1.2.7 SAE Publications. Society of Automotive Engineers, 400 Commonwealth Drive, Warrendale, PA 15096.

SAE J-1349, *Engine Power Test Code — Spark Ignition and Compression Engine*, 1990.

C.2 Informational References. (Reserved)

C.3 References for Extracts in Informational Sections. (Reserved)

Annex D Material Extracted by NFPA 70, Article 695

D.1 General. Table D.1 indicates corresponding sections of NFPA 70, Article 695.

Copyright National Fire Protection Association
Provided by IHS under license with NFPA
No reproduction or networking permitted without license from IHS
Not for Resale

Table D.1 NFPA 70, *National Electrical Code*, Extracted Material

NFPA 20		NFPA 70 Section 695		
2003 Edition	**2007 Edition**	**2002 Edition**	**2005 Edition**	**Section 695 Titles or Text**
(Reference only)		695.2	Same	Definitions
3.3.10	3.3.7.2	695.2	Same	Fault Tolerant External Control Circuits
3.3.27	3.3.34	695.2	Same	On-Site Power Production Facility
3.3.28	3.3.35	695.2	Same	On-Site Standby Generator
9.2.1.1	9.2.1	695.3	Same	Power Source(s) for Electric Motor-Driven Fire Pumps
9.2	9.2	695.3(A)	Same	Individual Sources
9.2.2	9.2.2	695.3(A)(1)	Same	Electric Utility Service Connection (2nd sentence)
9.2.3	9.2.2	695.3(A)(2)	Same	On-Site Power Production Facility
9.2.4	9.2.2	695.3(B)	Same	Multiple Sources
9.6.1	9.6.1	695.3(B)(1)	Same	Generator Capacity
9.2.5.3	9.3.4(1)	695.3(B)(2)	Same	Feeder Sources
9.2.5.1	9.3.2	695.3(B)(3)	Same	Arrangement
9.3.2.1.1	9.2.1	695.4	Same	Continuity of Power
9.3.2.2.1	9.2.1	695.4	Same	Continuity of Power
9.3.2.2.2	9.2.2	695.4(A)	Same	Direct Connection
9.3.2.2.3.1	9.2	695.4(B)	Same	Supervised Connection
9.3.2.2.3.1(1)	9.2	695.4(B)–(1)	Same	(listed fire pump controller)
9.3.2.2.3.1(2)	9.2	695.4(B)-(2)	Same	(listed fire pump power transfer switch)
9.3.2.2.3.1(3)	9.2	695.4(B)-(3)	Same	(listed combo. fire pump controller / transfer switch)
9.3.2.2.3.3	9.2(5)	695.4(B) — continued	Same	For systems installed under the provisions of 695.3(B)(2) only . . .
9.3.2.2.3.2	9.2.3.1	695.4(B) — continued	Same	All disconnecting devices and overcurrent protective devices . . .
9.3.2.2.3.2(A)	9.2.3.4	695.4(B)(1)	Same	Overcurrent Device Selection
9.3.2.2.3.2(B)	9.2.3.2	695.4(B)(2)	Same	Disconnecting Means
9.3.2.2.3.2(B)(1)	9.2.3.1	695.4(B)(2)-(1)	Same	Be identified as suitable for use as service equipment . . .
9.3.2.2.3.2(B)(2)	9.2.3.1(2)	695.4(B)(2)-(2)	Same	Be lockable in the closed position . . .
(Reference only)		(New in 2005)	695.4(B)(2)-(3)	Not be located within equipment that feeds loads other than . . .
9.3.2.2.3.2(B)(3)	9.2.3.1(4)	695.4(B)(2)-(3)	695.4(B)(2)-(4)	Be located sufficiently remote from . . .
9.3.2.2.3.2(C)	9.2.3.1(5)	695.4(B)(3)	Same	Disconnect Marking
9.3.2.2.3.2(D)	10.1.2.2	695.4(B)(4)	Same	Controller Marking
9.3.2.2.3.2(E)	9.2.3.3	695.4(B)(5)	Same	Supervision
9.3.2.2.3.2(E)(1)	9.2.3.3(1)	695.4(B)(5)-(1)	Same	Central station, proprietary, or remote station . . .
9.3.2.2.3.2(E)(2)	9.2.3.3(2)	695.4(B)(5)-(2)	Same	Local signaling service . . .
9.3.2.2.3.2(E)(3)	9.2.3.3(3)	695.4(B)(5)-(3)	Same	Locking the disconnecting means . . .
9.3.2.2.3.2(E)(4)	9.2.3.3(4)	695.4(B)(5)-(4)	Same	Sealing of disconnecting means . . .
9.3.2.2.5	9.2.2(5)	695.5	Same	Transformers
9.3.2.2.5	9.2.3.4	695.5(B)	Same	Overcurrent Protection
(Reference only)		695.5(C)	Same	Feeder Source
(Reference only)		695.5(C)(1)	Same	Size
9.2.5.3.3	9.2.3	695.5(C)(2)	Same	Overcurrent Protection
(Reference only)		695.6	Same	Power Wiring

(continues)

--`,,```,,,,````-`-`,,`,,`,`,,`---

Copyright National Fire Protection Association
Provided by IHS under license with NFPA
No reproduction or networking permitted without license from IHS
Not for Resale

Table D.1 *Continued*

NFPA 20		NFPA 70 Section 695		
2003 Edition	**2007 Edition**	**2002 Edition**	**2005 Edition**	**Section 695 Titles or Text**
10.3.4.6	10.3.4.7	695.6(F)	Same	Junction Points
10.3.4.7	10.3.4.8	695.6(F)	Same	Junction Points
9.4	9.4	695.7	Same	Voltage Drop
9.5.1.1	9.5.1.1	695.10	Same	Listed Equipment
10.1.2.1	10.1.2.1	695.10	Same	Listed Equipment
10.8.3.1	10.8.3.1	695.10	Same	Listed Equipment
12.1.3.1	12.1.3.1	695.10	Same	Listed Equipment
(Reference only)		695.12	Same	Equipment Location
10.2.1	10.2.1	695.12(A)	Same	Controllers and Transfer Switches
12.2.1	12.2.1	695.12(B)	Same	Engine-Drive Controllers
11.2.5.2.5	11.2.5.2.6	695.12(C)	Same	Storage Batteries
11.2.5.2.6	11.2.5.2.7	695.12(D)	Same	Energized Equipment
10.2.2	10.2.2	695.12(E)	Same	Protection Against Pump Water
12.2.2	12.2.2	695.12(E)	Same	Protection Against Pump Water
10.3.2	10.3.2	695.12(F)	Same	Mounting
12.3.2	12.3.2	695.12(F)	Same	Mounting
10.5.2.6	10.5.2.6	695.14(A)	Same	Control Circuit Failures
12.5.2.5	12.5.2.5	695.14(A)	Same	Control Circuit Failures
12.6.12	12.6.12	695.14(A)	Same	Control Circuit Failures
10.4.5.6	10.4.5.7	695.14(B)	Same	Sensor Functioning
10.8.1.3	10.8.1.3	695.14(C)	Same	Remote Device(s)
12.3.5.1	12.3.5.1	695.14(D)	Same	Engine-Drive Control Wiring
12.6.4.1	12.6.4.1	695.14(D)	Same	Engine-Drive Control Wiring
(Reference only)		695.14(E)	Same	Electric Fire Pump Control Wiring Methods
Additional References — Informational Only				
A.9.2.4(3)	A.9.3.2(3)	695.6(A)	Same	Service Conductors
9.6.4	9.6.4	695.12(A)	Same	Controllers and Transfer Switches
A.9.2.4(3)	A.9.3.2(3)	695.14(F)	Same	Generator Control Wiring Methods

Copyright National Fire Protection Association
Provided by IHS under license with NFPA
No reproduction or networking permitted without license from IHS
Not for Resale

Index

Copyright © 2006 National Fire Protection Association. All Rights Reserved.

The copyright in this index is separate and distinct from the copyright in the document that it indexes. The licensing provisions set forth for the document are not applicable to this index. This index may not be reproduced in whole or in part by any means without the express written permission of NFPA.

-A-

Additive
Definition 3.3.1
Piping 5.13.3
Additive pumps ..... 8.2, 8.9.2, A.8.2.2 to A.8.2.6; *see also* Foam concentrate pumps
Definition 3.3.37.1
Motors, controllers for 10.9
Air leaks/pockets B.1.1, B.1.3, B.1.7
Air release fittings, automatic ..... 6.3.1, 6.3.3, 7.3.5.1(1), 7.3.5.2, A.6.3.1
Air starting ..... 11.2.5.4, 12.4.1.4(3), 12.6, A.11.2.5.4.4, A.12.6.9
Alarms, fire pump .....*see* Fire pump alarms
Application of standard 1.3
Approved/approval
Definition 3.2.1, A.3.2.1
Requirements 5.2, A.5.2
Aquifer (definition) 3.3.2
Aquifer performance analysis A.7.2.1.2
Definition 3.3.3
Authority having jurisdiction
Definition 3.2.2, A.3.2.2
Fuel system plan review 11.4.1
Automatic air release fittings .....*see* Air release fittings, automatic
Automatic transfer switches 10.8.1.3
Definition 3.3.47.2.1

-B-

Backflow preventers ..... 5.14.9(1), 5.15.6, 5.16.1, 5.26, 5.30.1, 11.2.6.3.1.4, A.5.14.9, A.5.15.6, A.11.2.6.3.1.4(B)
Batteries, storage 11.2.5.2, 12.5.4, 14.2.7.4.7.1, 14.2.8.7, A.11.2.5.2.4, A.11.2.5.2.6
Failure indicators ..... 12.4.1.4(1), 12.4.1.4(2)
Location 11.2.5.2.6, A.11.2.5.2.6
Maintenance 11.6.3, B.1.32
Recharging 11.2.5.2.4, A.11.2.5.2.4
Voltmeter 12.4.5
Battery chargers ..... 11.2.5.2.4.3, 11.2.5.2.5, 12.4.1.4(2)
Bowl assembly, vertical shaft turbine pumps 7.3.3
Branch circuit (definition) 3.3.7.1
Break tanks 5.30
Definition 3.3.6
Refill mechanism 5.30.3
Size 5.30.2
Butterfly valves 5.15.7, 5.15.8, 5.24.4, A.5.24.4
Bypass line ... 5.14.4, 11.2.6.4, A.5.14.4, A.11.2.6.4, A.13.2.1.1, B.1.25
Bypass operation, variable speed pressure limiting control 10.10.3, A.10.10.3
Bypass valves 5.16.1

-C-

Can pump (definition) 3.3.37.2
Capacity, pump 5.8, 6.2.1, A.5.8, A.14.2.7.4
Centrifugal pumps
Capacity 5.8, 6.2.1, A.5.8, A.14.2.7.4
Component replacement 14.5.2
Connection to driver and alignment 6.5, A.6.5, B.1.23
Definition 3.3.37.3
End suction 6.1.1.2
Factory and field performance 6.2, A.6.2
In-line 6.1.1.2
Maximum pressure for 5.7.6, A.5.7.6
Pressure maintenance pumps 5.24.5.1, A.5.24.5
Relief valves ..... 5.18, A.5.18.1 to A.5.18.8
Sole supply 12.5.2.6, 12.6.13
Types 6.1.1, A.6.1.1
Check valves ..... 5.14.9(1), 5.15.6, 5.24.3, 5.24.4, 5.26, 5.29.2, 5.29.4.1, 11.2.6.3.1.4, A.5.15.6, A.5.24.4, A.11.2.6.3.1.4(A)
Circuit breakers .....*see* Disconnecting means
Circuits .....*see also* Fault tolerant external control circuits
Branch circuit (definition) 3.3.7.1
Internal conductors B.3.2.3
Protection of .....*see* Protective devices
Circulation relief valves .....*see* Relief valves
Columns, vertical shaft turbine pumps 7.3.2, A.7.3.2.1
Contractor's material and test certificate 14.1.3, A.14.1.3
Controllers, fire pump .....*see* Fire pump controllers
Control valves .....*see* Gate valves
Coolant, engine 11.2.6.2
Corrosion-resistant material (definition) 3.3.9
Couplings, flexible .....*see* Flexible couplings
Current-carrying part location 11.2.5.2.7
Cutting, torch 5.13.4, A.5.13.4

-D-

Definitions ..... Chap. 3
Detectors, liquid level .....*see* Liquid level
Diesel engines ..... 5.7.2, Chap. 11; *see also* Engine drive controllers
Connection to pump 11.2.3
Cooling 11.2.6, A.11.2.6.3, A.11.2.6.4, B.1.25
Definition 3.3.13.1
Emergency starting and stopping 11.6.6
Exhaust 11.5, A.11.5.3
Fire pump buildings or rooms with 5.12.1.3
Fuel supply and arrangement ..... 11.4, A.11.4.2 to A.11.4.7
Instrumentation and control ..... 11.2.4, A.11.2.4.8 to A.11.2.4.12.3.3
Listing 11.2.1
Operation and maintenance 11.6, A.11.6, A.14.2.7
Protection 11.3, A.11.3
Ratings ..... 11.2.2, A.11.2.2.2 to A.11.2.2.5
Redundant 9.3.3
Starting methods ..... 11.2.5, 11.6.6, A.11.2.5.2.1 to A.11.2.5.4.4, A.14.2.7
Tests 14.2.7, A.14.2.7
Type 11.1.3, A.11.1.3
Vertical lineshaft turbine pumps 7.5.1.3, 7.5.1.4, 7.5.2
Discharge cones ..... 5.18.5.1, 5.18.5.4, 6.3.2(4), 7.3.5.1(4), A.5.18.5
Discharge pipe and fittings ..... 5.2.3, 5.15, A.5.15.3 to A.5.15.6
From dump valves 8.1.6.5
Pressure maintenance pumps 5.24.7
From relief valves ..... 5.18.5 to 5.18.9, A.5.18.5, A.5.18.7, A.5.18.8
Valves ..... 5.15.6 to 5.15.9, 5.16.1, 5.24.3, 5.24.5.1, 5.29.2, A.5.15.6, A.5.24.4
Discharge pressure gauges 5.10.1, 8.4.1
Disconnecting means
Definition 3.3.11
Electric-drive controllers 10.4.3, 10.6.3, 10.6.8, 10.7.2.1, A.10.4.3.1, A.10.4.3.3, A.10.7, B.2, B.3.1, B.3.2.2
Variable speed drives 10.10.5, A.10.10.5
Electric drivers ..... 9.2.3, A.9.2.3.1(3), A.9.2.3.1(4), B.2

Copyright National Fire Protection Association
Provided by IHS under license with NFPA
No reproduction or networking permitted without license from IHS
Not for Resale

Drainage
Pump room/house 5.12.6, 11.3.1, A.5.12.6
Water mist system pumps 8.4.4.1
Drawdown (definition) 3.3.12
Dripproof motors 9.5.1.8.1, 9.5.2.4
Definition 3.3.32.2
Guarded (definition) 3.3.32.1
Drivers ..... 5.2.3, 5.2.4, 5.4.1, 5.7, A.5.4.1, A.5.7.3, A.5.7.6, B.1.23, B.1.26; *see also* Diesel engines; Electric motors (drivers); Steam turbines
Earthquake protection 5.27.1, A.5.27.1
Positive displacement pumps 8.5, 8.8, A.8.5.1
Pump connection and alignment 6.5, A.6.5, B.1.23
Speed B.1.28, B.1.30
Vertical lineshaft turbine pumps 7.5, 7.6.1.6
Dual-drive pump units 5.7.3
Dump valves 8.1.6
Control 8.1.6.3
Definition 3.3.54.1
Dust-ignition-proof motor (definition) 3.3.32.3

-E-

Earthquake protection 5.12.1, 5.27, A.5.12.1, A.5.27.1
Eccentric tapered reducer or increaser ..... 5.14.6.4, 6.3.2(1)
Electric-drive controllers ..... 9.1.2, Chap. 10; *see also* Electric motors (drivers)
Additive pump motors 10.9
Automatic 10.5.1, 10.5.2, 10.9.2, A.10.5.1
Components ..... 10.4, A.10.4.1 to A.10.4.7
Connections and wiring 10.3.4
Continuous-duty basis 10.3.4.5
Control circuits, protection of 10.3.5
Construction ..... 10.3, A.10.3.3.1 to A.10.3.7.3
Design 10.1.3
Electrical diagrams and instructions 10.3.7, A.10.3.7.3
Electrical power supply connection 9.6.4
Emergency-run control 10.5.3.2, 10.6.10, A.10.5.3.2
External operations 10.3.6, 10.5.2.6, A.10.3.6
Indicating devices
Available power 10.6.6
Power source 10.8.3.8
Remote indication 10.4.8, 10.8.3.14, 10.10.9, A.10.4.5.7
Variable speed drive operations 10.10.8, 10.10.9
Limited service 10.7, A.10.7
Listing 10.1.2.1, 10.1.2.4
Location 10.2, A.10.2.1
Low-voltage control circuit 10.6.5
Nonautomatic 10.5.1, 10.5.2.4, 10.5.3, A.10.5.1, A.10.5.3.2
Power transfer for alternate power supply 10.8, A.10.8
Rated in excess of 600 Volts 10.6
Service arrangements 10.1.2.6
Starting and control ..... 10.5, A.10.5.1 to A.10.5.3.2
Motor starting circuitry 10.4.5, A.10.4.5.7
Starting reactors and autotransformers 10.4.5.4
Starting resistors 10.4.5.3
Timed acceleration 10.4.5.2
State of readiness 10.1.2.7
Stopping methods 10.5.4, 10.9.3
Variable speed pressure limiting control 10.5.2.1.6.5, 10.10, A.10.10
Voltage drop 9.1.6, 9.4, A.9.4
Electric motors (drivers) ..... 5.7.2, 6.5.1.1, Chap. 9; *see also* Electric-drive controllers
Current limits 9.5.2
Definition 3.3.32.4
Operation A.14.2.7
Phase reversal test 14.2.7.6, A.14.2.7.6
Power sources and supply ..... *see* Power supply
Problems of ..... B.1.26, B.1.28 to B.1.30
Speed B.1.28, B.1.30
Tests 10.3.4.3, 14.2.7, A.14.2.7
Vertical lineshaft turbine pumps 7.5.1.3, 7.5.1.5, 7.5.2
Voltage drop 9.1.6, 9.4, A.9.4
Electric starting, diesel engine 11.2.5.2, A.11.2.5.2.4, A.11.2.5.2.6
Electric supply ..... *see* Power supply
Electronic fuel management control ..... 11.2.4.12, 12.4.1.4(5), 12.4.1.4(6), 14.2.13, A.11.2.4.12, A.14.2.13
Emergency boiler feed, steam turbine A.13.3
Emergency control for engine drive controllers 12.5.6
Emergency governors 13.2.2.4, 13.2.2.5, 14.2.10
Emergency lighting 5.12.4
Emergency-run mechanical control 10.5.3.2, 10.6.10, A.10.5.3.2
Enclosures, pump ..... *see* Pump rooms/houses
Enclosures for controllers 9.3.6.2, 10.3.3, 12.3.3, A.9.3.6.2, A.12.3.3.1, B.3.2.1
End suction pumps ..... 6.1.1.2, Fig. A.6.1.1(a)
Definition 3.3.37.4
Engine drive controllers ..... Chap. 12
Air starting 11.2.5.4, 12.6, A.11.2.5.4.4, A.12.6.9
Automatic 12.5.1, 12.5.2, A.12.5
In-factory wiring 11.2.4.8, 11.2.5.4.2, A.11.2.4.8
In-field wiring 11.2.4.9, A.11.2.4.9
Components ..... 12.4, A.12.4.1.2 to A.12.4.4
Connections and wiring 11.2.4.8, 11.2.4.9, 11.2.5.4.2, 12.3.5, A.11.2.4.8, A.11.2.4.9
Construction ..... 12.3, A.12.3.1 to A.12.3.8
Contacts 12.4.3
Electrical diagrams and instructions 12.3.6, 12.3.8, 12.6.5, A.12.3.8
External operations 12.3.6.3, 12.5.2.5, 12.6.12
Indicators 12.4.1, 12.6.7, A.12.4.1.2
Remote ..... 12.4.2, 12.4.3, 12.6.8, 14.2.8.6, A.12.4.2.2(3)
Location 12.2, A.12.2.1
Locked cabinet for switches 12.3.4
Nonautomatic 12.5.1, 12.5.2.3, 12.5.3, 12.6.11, 12.6.14, A.12.5
Starting and control 12.5, 12.6.15, A.12.5
Stopping methods ... 12.5.5, 12.6.13, 12.6.14.3, 12.6.16, A.12.5.5.2
Automatic shutdown 12.5.5.2, A.12.5.5.2
Manual shutdown 12.5.5.1, 12.6.13, 12.6.14.3, 12.6.16, A.12.5.5.2
Tests 12.5.3.2, 14.2.8.7
Engines
Diesel ..... *see* Diesel engines
Internal combustion ..... *see* Internal combustion engines
Equivalency to standard 1.5
Exhaust system
Diesel engine 11.5, A.11.5.3
Steam turbines A.13.3
Explosionproof motor (definition) 3.3.32.5

-F-

Fan-cooled motor, totally enclosed 9.5.2.4
Definition 3.3.32.8
Fault tolerant external control circuits 10.5.2.6, 12.5.2.5, 12.6.12
Definition 3.3.7.2
Feeder 9.2.2, A.9.2.2
Definition 3.3.15
Inadequate capacity B.1.28
Field acceptance tests ..... 5.4.2, 5.31, 14.2, 14.3.3, 14.5, A.14.2.2 to A.14.2.13
Fire protection equipment control 10.5.2.3, 12.5.2.2, 12.6.10
Fire pump alarms
Definition 3.3.16
Electric-drive controllers 10.1.1.2, 10.4.7, A.10.4.7
Engine drive controllers 12.1.2, 12.4.1.3, 12.6.7.7
Tests 14.2.11
Fire pump controllers .... 5.2.3, 5.2.4, 5.4.1, 8.6, A.5.4.1, A.8.6; *see also* Electric-drive controllers; Engine drive controllers
Acceptance test 14.2.8, A.14.2.8.1
Additive pump motors 10.9
Dedicated controller for each driver 5.7.5
Definition 3.3.17

Copyright National Fire Protection Association
Provided by IHS under license with NFPA
No reproduction or networking permitted without license from IHS
Not for Resale

Earthquake protection 5.27.1, A.5.27.1
Maintenance, after fault condition B.3
Positive displacement pump 8.1.6.3
Pressure sensing lines 5.29
Protection of 5.12.1, A.5.12.1
Vertical lineshaft turbine pumps 7.5.2
Fire pumps .....*see also* Pumps
Definition 3.3.37.5
Operations .....*see* Operations
Packaged systems 5.28
Redundant 9.3.3
Summary of data ..... Table 5.25(a), Table 5.25(b)
Fire pump units
Definition 3.3.18
Dual-drive 5.7.3
Field acceptance tests 5.31
Location and protection
Interior units 5.12.1.1, A.5.12.1.1
Outdoor units 5.12.1.2
Performance 5.4, 14.2.7.5, A.5.4.1
Fittings ..... 5.2.3, 5.13, 6.3, A.5.13.1 to A.5.13.4, A.6.3.1
Discharge ..... 5.15, A.5.15.3 to A.5.15.6
Joining method 5.13.2
Maintenance B.1.13
Positive displacement pumps ..... 8.4, A.8.4.2 to A.8.4.5
Suction ..... 5.14, A.5.14.1 to A.5.14.10
Vertical lineshaft turbine pumps 7.3.5, A.7.3.5.3
Flexible connecting shafts 6.5.1, 11.2.3.1.1, 11.2.3.2.1, A.6.5
Definition 3.3.19
Guards for 5.12.7
Vertical lineshaft turbine pumps 7.5.1.7.1, 7.5.1.8
Flexible couplings ..... 6.5.1, Fig. A.6.1.1(e), A.6.4.1, A.6.5
Definition 3.3.20
Diesel engine pump connection 11.2.3.1
Earthquake protection 5.27.4
Guards 5.12.7
Positive displacement pumps 8.8
Flooded suction (definition) 3.3.21
Flow-measuring device ..... 6.3.2(3), 14.2.7.4.3.1, 14.2.7.4.3.2
Flow tests .....*see* Tests
Foam concentrate piping 5.13.3
Foam concentrate pumps ..... 8.2, 8.4.3, 14.2.12, A.8.2.2 to A.8.2.6, A.8.4.3; *see also* Additive pumps
Foundations 6.4, A.6.4.1, A.6.4.4, B.1.24
Positive displacement pumps 8.7
Vertical lineshaft turbine pumps 7.4.3
Frequency-sensing devices 10.8.3.7
Fuel supply ..... 11.4, A.11.4.2 to A.11.4.7; *see also* Electronic fuel management control
Earthquake protection 5.27.1, A.5.27.1
Location 11.4.5, A.11.4.5
Maintenance 11.6.4, A.11.6.4
Obstructed system B.1.32
On-site standby generators 9.6.2.2, A.9.6.2

-G-

Gate valves ... 5.14.5, 5.15.7, 5.24.4, 5.29.2, A.5.14.5, A.5.24.4, A.13.3
Gear drives 7.5.1.7, 11.2.3.2.1, 14.2.7.4.9
Gear pump (definition) 3.3.37.7
Generator .....*see* On-site standby generator
Governors B.1.30
Diesel engine 11.2.4.1, 14.2.7.4.7.3, 14.2.7.4.7.4
Emergency 13.2.2.4, 13.2.2.5, 14.2.10
Speed, steam turbine 13.2.2
Ground-face unions 5.29.4.2
Grounding
Electric drive controller enclosures 10.3.3.3
Engine drive controllers 12.3.3.2
Groundwater (definition) 3.3.22
Guarded motors
Definition 3.3.32.6
Dripproof (definition) 3.3.32.1
Guards for fuel lines 11.4.2

-H-

Head .... 5.5.1, 6.2.2; *see also* Net positive suction head (NPSH) *(h_sv)*; Total head *(H)*
Available from water supply 5.6.5
Definition 3.3.23, A.3.3.23
Net head lower than rated B.1.12
Static A.6.1.2
Total discharge head *(h_d)* (definition) 3.3.23.2
Total rated head (definition) 3.3.23.4
Total suction head (definition) 3.3.23.5
Velocity head *(h_v)* (definition) 3.3.23.6
Vertical turbine pump head component 7.3.1, A.7.3.1
Heat exchangers ..... 11.2.6.1(1), 11.2.6.3, 11.2.6.4, A.11.2.6.3, A.11.2.6.4, A.11.3.2.3, A.11.3.2.4, B.1.25
Heat source, pump room/house 5.12.2
High-rise buildings
Definition 3.3.24
Indoor fire pumps, location of 5.12.1.1.1, A.5.12.1.1.1
Horizontal pumps 5.1.1
Definition 3.3.37.8
Diesel engine drive connection 11.2.3.1
Installation ..... Fig. A.6.3.1
Shaft rotation A.5.22
Split-case ..... 6.1.1.3, Fig. A.6.1.1(f), Fig. A.6.3.1
Definition 3.3.37.9
Suction pipe and fittings ..... 5.14.6.3.1 to 5.14.6.3.3
Total head *(H)* A.14.2.7.3
Definition 3.3.23.3.1, A.3.23.3.1
Hose valves ..... 5.19.3, 6.3.2(2), 7.3.5.1(5), A.5.19.3.1, A.14.2.7.2.1
Hydraulic starting ..... 11.2.5.3, 12.4.1.4(3)

-I-

Impellers
Impeller between bearings design 6.1.1.3, 6.4.1, A.6.1.1
Overhung impeller design 6.1.1.2, 6.4.1, 6.4.2, A.6.1.1, A.6.4.1
Problems ..... B.1.8, B.1.10 to B.1.12, B.1.15, B.1.16, B.1.29
Vertical lineshaft turbine pumps 7.3.3.2, 7.5.1.1, 7.5.1.2, 7.5.1.6.2, 7.5.1.7.2, 7.6.1.3, A.7.6.1.1
Indicating butterfly or gate valves 5.15.7, 5.15.8, 5.24.4, A.5.24.4
In-line pumps ..... 6.1.1.2, Figs. A.6.1.1(c) to (e)
Definition 3.3.37.10
In-rush currents 10.8.3.10
Instrument panel 11.2.4.7
Internal combustion engines ..... B.1.26; *see also* Diesel engines
Definition 3.3.13.2
Pump room or house, heat for 5.12.2.2
Spark-ignited 11.1.3.2
Speed B.1.28
Isolating switches ..... 10.4.2, 10.8.2.1.2 to 10.8.2.1.6, 10.8.2.2, A.10.4.2.1.2, A.10.4.2.3, B.3.1, B.3.2.2
Definition 3.3.47.1
Isolation valves 5.16.1

-J-

Jockey pumps .....*see* Pressure maintenance pumps
Junction boxes 9.3.6, 10.3.4.6.1, 10.3.4.7, A.9.3.6.2, A.9.3.6.3

-L-

Lighting
Artificial 5.12.3
Emergency 5.12.4
Liquid (definition) 3.3.27
Liquid level
Detectors ..... 7.3.5.1(2), 7.3.5.3, A.7.3.5.3
Pumping 5.6.3, B.1.19
Definition 3.3.28.1

--`,,```,,,,````-`-`,,`,,`,`,,`---

Copyright National Fire Protection Association
Provided by IHS under license with NFPA
No reproduction or networking permitted without license from IHS
Not for Resale

Static 6.1.2, A.6.1.2
Definition 3.3.28.2
Well or wet pit 5.6.3
Liquid supplies ..... 5.2.3, 5.2.4, 5.6, A.5.6.1 to A.5.6.4
Head 5.6.5, A.6.1.2
Heat exchanger 11.2.6.3, 11.2.6.4, A.11.2.6.3, A.11.2.6.4
Potable water, protection of 8.4.6
Pumps, priming of B.1.19
Reliability 5.6.1, A.5.6.1
Sources 5.6.2, 7.2.1, A.5.6.2, A.7.1.1, A.7.2.1.1, A.7.2.1.2
Discharge to 5.18.7, A.5.18.7
Stored supply 5.6.4, A.5.6.4
Vertical lineshaft turbine pumps ..... 7.1.1, 7.2, A.7.1.1, A.7.2.1.1 to A.7.2.7, B.1.19
Listed
Break tank refill mechanism 5.30.3
Controllers and transfer switches 10.1.2.1, 10.1.2.4, 10.10.1.2, 12.1.3.1
Definition 3.2.3, A.3.2.3
Dump valves 8.1.6.4
Electrical circuit protective system to controller wiring 9.3.7, A.9.3.7.1, A.9.3.7.2
Engines 11.2.1
Pumps 5.1.2.1, 5.7.1, A.5.7.1, A.6.2
Loads start test 14.2.7.5
Locked rotor overcurrent protection .... 10.4.4, 10.6.9, A.10.4.4.1(3)
Lockout, additive pump motors 10.9.4
Loss of phase 10.4.7.2.2
Definition 3.3.29
Low suction throttling valves ..... 5.14.9(2), 5.15.9
Definition 3.3.54.2
Lubrication, pump B.1.21, B.1.27

-M-

Maintenance
Batteries, storage 11.6.3, B.1.32
Controllers B.3
Diesel engines 11.6, A.11.6
Fittings B.1.13
Fuel supply 11.6.4, A.11.6.4
Pumps 7.6.2, 14.4
Water seals B.1.6
Main throttle valve, steam turbine 13.2.1.3
Make-up pumps .....*see* Pressure maintenance pumps
Manifold, exhaust 11.5.4
Manuals, instruction 14.3.1, 14.3.2
Manual transfer switches 10.8.1.2, 10.8.3.5
Definition 3.3.47.2.2
Marking
Additive pump motor controllers 10.9.5
Disconnecting means ..... 9.2.3.1(5), 9.2.3.2
Electric-drive controllers 10.1.2.2, 10.1.2.5, 10.3.8, 10.7.2.2, 10.9.5, 10.10.2, 10.10.11, A.10.1.2.2
Electric drivers 9.5.3
Engine drive controllers 12.1.3.3, 12.3.7, 12.6.3, 12.6.6
Transfer switches 10.1.2.2, A.10.1.2.2
Mass elastic system 7.5.1.6
Maximum pump brake horsepower 5.5.1
Definition 3.3.31
Measurement, units of 1.6
Meters 5.19.2, 8.9.2, 8.9.3, 14.2.7.4.3.1, 14.2.7.4.3.2, A.5.19.2.1.1
Motor contactors 10.4.5.1, B.3.2.4
Motors
Dripproof .....*see* Dripproof motors
Dust-ignition-proof (definition) 3.3.32.3
Electric .....*see* Electric motors (drivers)
Explosionproof (definition) 3.3.32.5
Guarded (definition) 3.3.32.6
Open 9.5.2.4
Definition 3.3.32.7
Speed .....*see* Speed
Totally enclosed .....*see* Totally enclosed motors
Multistage pumps 5.1.1, 6.1.1.2, 6.1.1.3

-N-

Nameplates, on pumps 5.9
Net positive suction head (NPSH) *(h_sv)* 7.2.2.2.2, 8.2.2, 8.3.2, A.8.2.2
Definition 3.3.23.1
Nonreverse ratchets 7.5.1.4, 7.5.1.7.3, 9.5.1.8.2, 11.2.3.2.2
Nonventilated motor, totally enclosed 9.5.2.4
Definition 3.3.32.10

-O-

Oil pressure gauge 11.2.4.5
On-site power production facility ..... 9.2.2(2), A.9.2.3.1(3), A.9.2.3.1(4); *see also* Power supply
Definition 3.3.34
On-site standby generator ..... 9.3.4, 9.6, 10.8.3.6.2, 10.8.3.12, A.9.6.2, A.9.6.5; *see also* Power supply, Alternate power sources
Definition 3.3.35
Open motors 9.5.2.4
Definition 3.3.32.7
Operations
Controllers, external operations 10.3.6, 10.5.2.6, 12.3.6.3, 12.5.2.5, 12.6.12, A.10.3.6
Diesel engines 11.6, A.11.6
Pumps 5.3, 7.6.1, A.7.6.1.1, A.7.6.1.4, A.14.2.7
Outdoor setting
Fire pump units 5.12.1.2, A.5.12.1
Vertical lineshaft turbine pumps 7.4.2
Outside screw and yoke gate valves .....*see* Gate valves
Overcurrent protection ..... 9.2.2(4), 9.2.3, 10.3.5.1, 10.8.2.2(3), 10.8.3.11, 14.2.8.8; *see also* Disconnecting means
Isolating switch 10.4.2.1.3
Locked rotor ..... 10.4.4, 10.6.9, A.10.4.4.1(3)
Overspeed shutdown device 11.2.4.3

-P-

Packaged fire pump systems 5.28
Phase converters A.9.2.2
Phase reversal 10.4.6.2, 10.4.7.2.3, 14.2.7.6, A.14.2.7.6
Pipe ... 5.13, A.5.13.1 to A.5.13.4; *see also* Discharge pipe and fittings; Suction pipe and fittings
Break tank refill 5.30.3.2.3
Exhaust 11.5.3, A.11.5.3
Flushing 14.1, A.14.1.3
Fuel 11.4.2, 11.4.6, A.11.4.2, A.11.4.6
Joining method 5.13.2
Minimum pipe size data ..... Table 5.25(a), Table 5.25(b)
Problems, causes of ..... B.1.1 to B.1.3, B.1.6
Protection
Against damage due to movement 5.17, A.5.17
For fuel line 11.4.2, A.11.4.2
Steel 5.13.1, 5.13.2.1, 5.24.7, 5.29.3
Pipeline strainers ..... 6.3.2(5)
Piston plunger pump (definition) 3.3.37.11
Positive displacement pumps ..... 5.1.1, Chap. 8
Application 8.1.3
Component replacement 14.5.1
Connection to driver and alignment 8.8
Controllers 8.6, A.8.6
Definition 3.3.37.12
Drivers 8.5, 8.8, A.8.5.1
Fittings ..... 8.4, A.8.4.2 to A.8.4.5
Flow tests 8.9, 14.2.7.4.3
Foam concentrate and additive pumps ..... 8.2, 8.4.3, 8.9.2, A.8.2.2 to A.8.2.6, A.8.4.3
Foundation and setting 8.7
Materials 8.1.5, A.8.1.5

Copyright National Fire Protection Association
Provided by IHS under license with NFPA
No reproduction or networking permitted without license from IHS
Not for Resale

Seals 8.1.4, 8.2.3
Suitability 8.1.2, A.8.1.2
Types 8.1.1
Water mist system pumps 8.3, A.8.3.1
Power supply 5.2.3, 5.2.4, 5.20
Alternate power sources ..... 9.2.2(4), 9.3, 10.4.7.2.4, 10.8, 14.2.9, A.10.8; *see also* On-site standby generator
Momentary test switch 10.8.3.13
Overcurrent protection 10.8.3.11
Transfer of power 9.6.4, 10.8.3.9
Electric drive for pumps ..... 9.1.4 to 9.1.6, 9.2, A.9.1.4, A.9.2.2, A.9.2.3.1(3), A.9.2.3.1(4), B.1.28, B.1.30
Alternate power sources ..... *see* subhead: Alternate power sources
Multiple power sources 9.3.4
Normal power 9.2, A.9.2.2
On-site power production facility ..... A.9.2.3.1(3), A.9.2.3.1(4)
Definition 3.3.34
Service-supplied 9.2.2, A.9.2.2
Variable speed drives 10.10.6, A.10.10.6.3
Steam supply ..... *see* Steam supply
Tests 10.8.3.13, 14.2.8.9, 14.2.9, A.14.2.7.3
Pressure control valves A.13.2.1.1
Definition 3.3.54.3
Pressure gauges 5.10, 6.3.1, A.5.10.2, A.6.3.1, B.1.14
Oil 11.2.4.5
Positive displacement pumps 8.4.1
Steam 13.2.3
Vertical lineshaft turbine pumps ..... 7.3.5.1(3)
Pressure maintenance pumps 5.24, 10.3.4.8, A.5.14.4, A.5.14.9, A.5.24
Pressure sensing lines 5.29.1, 5.29.2
Pressure recorders 12.4.4, 12.6.9, A.12.4.4, A.12.6.9
Pressure-reducing valves A.13.3
Definition 3.3.54.4
Pressure regulating devices 5.15.10, A.13.2.1.1
Definition 3.3.36
Pressure relief valves ..... *see* Relief valves
Pressure sensing lines, controllers 5.29
Protection
Equipment 5.12, 11.3, A.5.12, A.11.3
Personnel 10.6.7, B.2
Piping
Fuel line 11.4.2, A.11.4.2
Movement, damage due 5.17, A.5.17
Protective devices ..... *see also* Overcurrent protection
Control circuits 10.3.5
Controller ..... 10.4.2 to 10.4.4, 10.6.9, A.10.4.2.1.2, A.10.4.2.3
Listed electrical circuit protective system to controller wiring 9.3.7, A.9.3.7.1, A.9.3.7.2
On-site power source circuits 9.6.5, A.9.6.5
Overspeed shutdown device 11.2.4.3
Variable speed drive circuit protection 10.10.5, A.10.10.5
Pump brake horsepower, maximum (definition) 3.3.31
Pumping liquid level 5.6.3, A.7.1.1
Definition 3.3.29.1
Pump manufacturers 10.1.2.6, 12.1.4, 14.2.1
Pump rooms/houses 5.12, A.5.12
Drainage 5.12.6, 11.3.1, A.5.12.6
Lighting 5.12.3, 5.12.4
Temperature of 5.12.2, 11.6.5, A.11.6.5, B.1.17
Torch-cutting or welding in 5.13.4, A.5.13.4
Ventilation 5.12.5, 11.3.2, A.11.3.2
Vertical lineshaft turbine pumps 7.4.1
Pumps
Additive ..... *see* Additive pumps
Bypass, with 5.14.4, 11.2.6.4, A.5.14.4, A.11.2.6.4
Can (definition) 3.3.37.2
Centrifugal ..... *see* Centrifugal pumps
End suction ..... *see* End suction pumps
Fire ..... *see* Fire pumps
Foam concentrate ..... *see* Foam concentrate pumps
Gear (definition) 3.3.37.7
Horizontal ..... *see* Horizontal pumps
In-line ..... *see* In-line pumps
Listed 5.1.2.1, 5.7.1, A.5.7.1
Lubrication B.1.21, B.1.27
Multiple 5.14.3.1, 5.14.7, 11.4.4, 12.1.3.3.2, 12.6.3.2
Sequence starting of 9.6.3, 10.5.2.5, 12.5.2.4
Multistage 5.1.1, 6.1.1.2, 6.1.1.3
Piston plunger (definition) 3.3.37.11
Positive displacement ..... *see* Positive displacement pumps
Pressure maintenance ..... *see* Pressure maintenance pumps
Priming B.1.19
Problems, causes of ..... Annex B
Rotary lobe (definition) 3.3.37.13
Rotary vane (definition) 3.3.37.14
Single-stage 5.1.1, 6.1.1.2, 6.1.1.3, A.6.1.1
Speed B.1.30
Vertical lineshaft turbine ..... *see* Vertical lineshaft turbine pumps
Pump shaft rotation 5.22, A.5.22, B.1.18
Purpose of standard 1.2

-Q-

Qualified person (definition) 3.3.39

-R-

Raceways 9.3.7.2, A.9.3.7.2
Terminations 9.3.8
Radiators ..... 11.2.6.7, 11.3.2.1(4), 11.3.2.4.3, A.11.3.2.3, A.11.3.2.4
References ..... Chap. 2, Annex C
Relief valves ..... 5.7.6.2, 5.18, 5.24.5.1, 6.3.1, 6.3.2(4), A.5.7.6, A.5.18.1 to A.5.18.8, A.6.3.1, A.14.2.7.1
Circulation relief valves 6.3.1, A.6.3.1, A.14.2.7.1
Automatic 5.11.1
Combination with pressure relief valve 5.11.2
Definition 3.3.54.5.1
Definition 3.3.54.5
Drainage, backflow prevention device 5.26.2
Positive displacement pumps ..... 8.4.2 to 8.4.4, A.8.4.2 to A.8.4.4
Vertical lineshaft turbine pumps ..... 7.3.5.1(4)
Remote station, manual control at 10.5.2.4, 12.5.2.3, 12.6.11
Retroactivity of standard 1.4
Rotary lobe pump (definition) 3.3.37.13
Rotary vane pump (definition) 3.3.37.14

-S-

Scope of standard 1.1, A.1.1
Screens
Suction pipe 5.14.8, 7.3.4.3, A.5.14.8
Well ..... 7.2.4.5 to 7.2.4.11
Seals
Positive displacement pumps 8.1.4, 8.2.3
Rings improperly located in stuffing box B.1.20
Water seals, maintenance of B.1.6
Sequence starting of pumps 9.6.3, 10.5.2.5, 12.5.2.4
Service (power source) 9.2.2, A.9.2.2
Definition 3.3.40, A.3.3.40
Service equipment ..... 9.2.3.1(1)
Definition 3.3.41, A.3.3.41
Service factor (definition) 3.3.42
Set pressure 5.7.6.3.2, A.5.7.6.3.2
Definition 3.3.43
Variable speed pressure limiting control 10.10.3.1, 10.10.8.3
Shaft rotation ..... *see* Pump shaft rotation
Shafts, flexible connecting ..... *see* Flexible connecting shafts
Shall (definition) 3.2.4
Shop tests ..... *see* Tests
Should (definition) 3.2.5
Shutoff valve 5.18.9, 11.2.6.4.2
Signal devices
Electric-drive controllers 10.1.1.2, 10.4.6, 10.4.7, A.10.4.6, A.10.4.7

--`,,```,,,,````-`-`,,`,,`,`,,`---

Copyright National Fire Protection Association
Provided by IHS under license with NFPA
No reproduction or networking permitted without license from IHS

Not for Resale

Engine drive controllers ..... 12.1.2, 12.4.2, A.12.4.2.2(3)
Phase reversal indicator 10.4.6.2, 10.4.7.2.3
Signals 5.23, A.5.23
Break tank low liquid level 5.30.3.1.5
Definition 3.3.44, A.3.3.44
Electric-drive controllers 10.4.5.7.3, 10.4.7.1, A.10.4.5.7
Engine drive controllers ..... 12.4.1.4, 12.4.1.5, 12.6.7.4 to 12.6.7.7, 14.2.8.6
Engine running and crank termination 11.2.4.10, 11.2.5.4.3
Tests 14.2.11
Visible ..... 10.4.7.1; *see also* Visible indicators
Single-stage pumps 5.1.1, 6.1.1.2, 6.1.1.3, A.6.1.1
SI units 1.6
Spare parts 14.3.4, 14.5.2.3
Speed .....*see also* Variable speed pressure limiting control
Engine
Definition 3.3.45.1
Internal combustion engine B.1.28
Overspeed shutdown device 11.2.4.3
Motor B.1.28, B.1.30
Definition 3.3.45.2
Rated A.14.2.7.3
Definition 3.3.45.3
Steam turbine B.1.28
Speed governor, steam turbine 13.2.2
Split-case pumps .....*see* Horizontal pumps
Sprinkler systems 5.12.1.3
Standard (definition) 3.2.6
Static liquid level 6.1.2, A.6.1.2
Definition 3.3.29.2
Steam supply 5.20.1, 13.1.3.1, 13.3, A.13.1.3, A.13.3
Steam turbines ..... 5.7.2, Chap. 13, B.1.26
Acceptability 13.1.1
Bearings 13.2.6
Capacity 13.1.2
Casing and other parts 13.2.1, A.13.2.1.1
Gauge and gauge connections 13.2.3
Installation 13.3, A.13.3
Obstructed pipe B.1.32
Redundant 9.3.3
Rotor 13.2.4
Shaft 13.2.5
Speed B.1.28
Speed governor 13.2.2
Steam consumption 13.1.3, A.13.1.3
Tests 14.2.7, 14.2.10.1, A.14.2.7
Vertical lineshaft turbine pumps 7.5.1.3, 7.5.1.4, 7.5.2
Steel pipe .....*see* Pipe
Storage batteries .....*see* Batteries, storage
Strainers .....*see also* Suction strainers
Engine cooling system B.1.25
Pipeline ..... 6.3.2(5)
Suction, vertical shaft turbine pumps 7.3.4
Turbine steam lines A.13.3
Stuffing boxes B.1.5, B.1.7, B.1.20
Suction .....*see also* Net positive suction head
Static suction lift 6.1.2, A.6.1.2
Total suction head (definition) 3.3.23.5
Total suction lift (h_l) (definition) 3.3.53
Suction pipe and fittings ..... 5.2.3, 5.14, A.5.14.1 to A.5.14.10
Devices in 5.14.9, A.5.14.9
Elbows and tees 5.14.6.3
Freeze protection 5.14.6.2
Pressure maintenance pumps 5.24.7
Problems, causes of ..... B.1.1 to B.1.3
Strain relief 5.14.6.5
Valves 5.16.1
Suction pressure gauges 5.10.2, 8.4.1, A.5.10.2
Suction reservoir, discharge to 5.18.8, A.5.18.8
Suction screening 5.14.8, A.5.14.8
Suction strainers
Positive displacement pumps 8.4.5, A.8.4.5
Vertical shaft turbine pumps 7.3.4
Sump, vertical shaft turbine-type pumps 7.4.3.7
Switches .....*see also* Isolating switches; Transfer switches
Locked cabinets for 12.3.4
Pressure switch, pressure sensing line 5.29.6

-T-

Tachometer 11.2.4.4
Tanks
Break .....*see* Break tanks
Fuel supply 5.27.1, 11.4.3, A.5.27.1, A.11.4.3
Temperature gauge 11.2.4.6
Tests .....*see also* Field acceptance tests; Water flow test devices
Aquifer performance analysis A.7.2.1.2
Definition 3.3.3
Component replacement 14.5
Controllers 10.1.2.3, 10.1.2.6
Acceptance 14.2.8, A.14.2.8.1
Electric-drive controllers, test provisions within 10.3.4.3
Engine drive controllers, manual testing of 12.5.3.2
Rated in excess of 600 Volts 10.6.2
Duration 14.2.12
Flow 8.9, 14.2.7.2, 14.2.7.3.1, 14.2.7.4.3, A.14.2.7.2.1
Hydrostatic 5.21.2, 14.1, A.14.1.3
Loads start test 14.2.7.5
Metering devices or fixed nozzles for 5.19.2.1, 8.9.2, 8.9.3
Momentary test switch, alternate power source 10.8.3.13
Periodic 14.4
Shop (preshipment) 5.5, 5.21, 10.1.2.3, 14.2.4.2
Suction pipe 5.14.2
Vertical lineshaft turbine pumps 7.6.1, A.7.6.1.1, A.7.6.1.4
Vertical lineshaft turbine pump wells 7.2.7, A.7.2.7
Timer, weekly program 12.5.2.7
Tools, special 14.3.3
Total discharge head (h_d) (definition) 3.3.23.2
Total head *(H)*
Horizontal pumps A.14.2.7.3
Definition 3.3.23.3.1, A.3.3.23.3.1
Vertical turbine pumps 7.1.2, A.14.2.7.4
Definition 3.3.23.3.2, A.3.3.23.3.2
Totally enclosed motors
Definition 3.3.32.9
Fan-cooled 9.5.2.4
Definition 3.3.32.8
Nonventilated 9.5.2.4
Definition 3.3.32.10
Total rated head 7.1.2
Definition 3.3.23.4
Total suction head 5.21.2.2
Definition 3.3.23.5
Total suction lift (h_l) (definition) 3.3.53
Trade sizes 1.6.5
Transfer switches 9.1.2, 10.1.1.1, 10.4.8, 10.8, A.5.4.1, A.10.8
Automatic .....*see* Automatic transfer switches
Listing 10.1.2.1, 10.1.2.4
Manual .....*see* Manual transfer switches
Marking 10.1.2.2, A.10.1.2.2
Nonpressure-actuated 10.5.2.2
Pressure-actuated 10.5.2.1.1, 10.6.4, 12.5.2.1.1, 14.2.8.6, A.10.5.2.1, A.12.5.2.1.1
Service arrangements 10.1.2.6
Transformers ..... 9.2.2(5)
Troubleshooting ..... Annex B
Turbine pumps, vertical lineshaft .....*see* Vertical lineshaft turbine pumps
Turbines, steam .....*see* Steam turbines

-U-

Undervoltage-sensing devices 10.8.3.6
Units, pump .....*see* Fire pump units

--`,,```,,,,````-`-`,,`,,`,`,,`---

Copyright National Fire Protection Association
Provided by IHS under license with NFPA
No reproduction or networking permitted without license from IHS

Not for Resale

Units of measurement 1.6
Unloader valves 8.3.4, 8.3.5
Definition 3.3.54.6

-V-

Valves .....*see also* Butterfly valves; Check valves; Dump valves; Gate valves; Hose valves; Relief valves
Bypass 5.16.1
Discharge pipe ..... 5.15.6 to 5.15.9, A.5.15.6
Emergency governor 14.2.10
Fuel solenoid 11.4.8, 12.5.3.2
Isolation 5.16.1
Low suction throttling 5.15.9
Definition 3.3.54.2
Main throttle, steam turbine 13.2.1.3
Pressure control A.13.2.1.1
Definition 3.3.54.3
Pressure-reducing A.13.3
Definition 3.3.54.4
Shutoff 5.18.9, 11.2.6.4.2
Supervision of 5.16, A.5.16
Unloader 8.3.4, 8.3.5
Definition 3.3.54.6
Variable speed pressure limiting control 5.7.6.3, 5.18.1.3, 10.5.2.1.6.5, 10.10, 11.2.4.2, 14.2.7.4.7.4, A.5.7.6.3.2, A.10.10
Definition 3.3.55
Velocity head (h_v) (definition) 3.3.23.6, A.3.3.23.6
Ventilation of pump room/house 5.12.5, 11.3.2, A.11.3.2
Vertical hollow shaft motors 7.5.1.5, 7.5.1.7.2
Vertical in-line pumps 5.27.3
Vertical lineshaft turbine pumps ..... 5.1.1, Chap. 7; *see also* Wells, vertical shaft turbine pumps
Bowl assembly 7.3.3
Characteristics 7.1.2
Column 7.3.2, A.7.3.2.1
Consolidated formations 7.2.5, A.7.2.5
Controllers 7.5.2
Definition 3.3.37.15
Drivers 7.5, 7.6.1.6, 9.5.1.8, 11.2.3.2
Fittings 7.3.5, A.7.3.5.3
Head 7.3.1, A.7.3.1
Total head *(H)* 7.1.2, A.14.2.7.4
Definition 3.3.23.3.2, A.3.23.3.2
Installation 7.4, A.7.1, A.7.4
Maintenance 7.6.2
Oil-lubricated type ..... 7.3.2.4 to 7.3.2.6, A.7.1.1
Operation 7.6.1, A.7.6.1.1, A.7.6.1.4
Pump house A.5.12
Shaft rotation A.5.22
Shop test 5.21.2.5
Submergence 7.2.2, A.7.2.2.1, A.7.2.2.2
Suction strainer 7.3.4
Suitability A.7.1.1
Unconsolidated formations 7.2.4
Water supply ..... 7.1.1, 7.2, A.7.2.1.1 to A.7.2.7, B.1.19
Vibration, pump 7.6.1.5, 14.2.6
Visible indicators
Electric-drive controllers ..... 10.4.5.7.3, 10.4.6.1, 10.6.6.2 to 10.6.6.4, 10.8.3.8, A.10.4.5.7
Engine drive controllers ..... 12.4.1.1 to 12.4.1.4, 12.6.7.1 to 12.6.7.4, A.12.4.1.2
Voltage
Low B.1.28
Rated motor voltage different from line voltage B.1.31
Voltage drop 9.1.6, 9.4, A.9.4
Voltage-sensing devices 10.8.3.7
Voltage surge arresters 10.4.1, A.10.4.1
Voltmeter 12.4.5, A.14.2.7.3
Vortex plate 5.14.10, A.5.14.10

-W-

Waste outlet, heat exchanger 11.2.6.6
Water flow test devices ..... 5.19, A.5.19.1.1 to A.5.19.3.4(2)
Water level .....*see* Liquid level
Water mist system pumps 8.3, 8.4.4, A.8.3.1, A.8.4.4
Water pressure control 10.5.2.1, 10.6.4, 12.5.2.1, A.10.5.2.1, A.12.5.2.1.1
Water supplies .....*see* Liquid supplies
Wearing rings B.1.9, B.1.19
Weekly program timer 12.5.2.7
Welding 5.13.4, A.5.13.4
Wells, vertical shaft turbine pumps
Construction 7.2.3
Developing 7.2.6
Installations ..... 7.2.2.1, Fig. A.7.1.1, A.7.2.2.1, Fig. A.7.2.2.1
Problems, causes of B.1.4
Screens ..... 7.2.4.5 to 7.2.4.11
Test and inspection 7.2.7, A.7.2.7
Tubular wells 7.2.4.16
In unconsolidated formations 7.2.4
Water level 5.6.3
Wet pits
Definition 3.3.57
Installation of vertical shaft turbine pumps ..... 7.2.2.2, 7.4.3.7, A.7.2.1.1, A.7.2.2.2, Fig. A.7.2.2.2
Suction strainer requirement 7.3.4.3
Water level 5.6.3
Wiring .....*see also* Disconnecting means
Electric-drive controllers 10.3.4
Engine drive controllers 11.2.4.8, 11.2.4.9, 11.2.4.11, 12.3.5, 12.6.4, A.11.2.4.8, A.11.2.4.9
Field acceptance tests 14.2.3
Problems of B.1.31, B.1.32

Copyright National Fire Protection Association
Provided by IHS under license with NFPA
No reproduction or networking permitted without license from IHS
Not for Resale

Sequence of Events Leading to Issuance of an NFPA Committee Document

Step 1: Call for Proposals

- Proposed new Document or new edition of an existing Document is entered into one of two yearly revision cycles, and a Call for Proposals is published.

Step 2: Report on Proposals (ROP)

- Committee meets to act on Proposals, to develop its own Proposals, and to prepare its Report.
- Committee votes by written ballot on Proposals. If two-thirds approve, Report goes forward. Lacking two-thirds approval, Report returns to Committee.
- Report on Proposals (ROP) is published for public review and comment.

Step 3: Report on Comments (ROC)

- Committee meets to act on Public Comments to develop its own Comments, and to prepare its report.
- Committee votes by written ballot on Comments. If two-thirds approve, Report goes forward. Lacking two-thirds approval, Report returns to Committee.
- Report on Comments (ROC) is published for public review.

Step 4: Technical Report Session

- "*Notices of intent to make a motion"* are filed, are reviewed, and valid motions are certified for presentation at the Technical Report Session. ("Consent Documents" that have no certified motions bypass the Technical Report Session and proceed to the Standards Council for issuance.)
- NFPA membership meets each June at the Annual Meeting Technical Report Session and acts on Technical Committee Reports (ROP and ROC) for Documents with "certified amending motions."
- Committee(s) vote on any amendments to Report approved at NFPA Annual Membership Meeting.

Step 5: Standards Council Issuance

- Notification of intent to file an appeal to the Standards Council on Association action must be filed within 20 days of the NFPA Annual Membership Meeting.
- Standards Council decides, based on all evidence, whether or not to issue Document or to take other action, including hearing any appeals.

Committee Membership Classifications

The following classifications apply to Technical Committee members and represent their principal interest in the activity of the committee.

M *Manufacturer:* A representative of a maker or marketer of a product, assembly, or system, or portion thereof, that is affected by the standard.

U *User:* A representative of an entity that is subject to the provisions of the standard or that voluntarily uses the standard.

I/M *Installer/Maintainer:* A representative of an entity that is in the business of installing or maintaining a product, assembly, or system affected by the standard.

L *Labor:* A labor representative or employee concerned with safety in the workplace.

R/T *Applied Research/Testing Laboratory:* A representative of an independent testing laboratory or independent applied research organization that promulgates and/or enforces standards.

E *Enforcing Authority:* A representative of an agency or an organization that promulgates and/or enforces standards.

I *Insurance:* A representative of an insurance company, broker, agent, bureau, or inspection agency.

C *Consumer:* A person who is, or represents, the ultimate purchaser of a product, system, or service affected by the standard, but who is not included in the *User* classification.

SE *Special Expert:* A person not representing any of the previous classifications, but who has a special expertise in the scope of the standard or portion thereof.

NOTES;
1. "Standard" connotes code, standard, recommended practice, or guide.
2. A representative includes an employee.
3. While these classifications will be used by the Standards Council to achieve a balance for Technical Committees, the Standards Council may determine that new classifications of members or unique interests need representation in order to foster the best possible committee deliberations on any project. In this connection, the Standards Council may make appointments as it deems appropriate in the public interest, such as the classification of "Utilities" in the National Electrical Code Committee.
4. Representatives of subsidiaries of any group are generally considered to have the same classification as the parent organization.

--`,,```,,,,````-`-`,,`,,`,`,,`---

Copyright National Fire Protection Association
Provided by IHS under license with NFPA
No reproduction or networking permitted without license from IHS

Not for Resale

NFPA Technical Committee Document Proposal Form

NOTE: All Proposals must be received by 5:00 p.m. EST/EDST on the published Proposal Closing Date.

For further information on the standards-making process, please contact the Codes and Standards Administration at 617-984-7249.

For technical assistance, please call NFPA at 617-770-3000.

FOR OFFICE USE ONLY

Log #:

Date Rec'd:

Please indicate in which format you wish to receive your ROP/ROC ☐ **electronic** ☐ **paper** ☒ **download**
(Note: If choosing the download option, you must view the ROP/ROC from our website; no copy will be sent to you.)

Date April 1, 200X **Name** John J. Doe **Tel. No.** 716-555-1234

Company Air Canada Pilot's Association

Street Address 123 Summer Street Lane **City** Lewiston **State** NY **Zip** 14092

Please indicate organization represented (if any)

1. (a) NFPA Document Title National Fuel Gas Code **NFPA No. & Year** 54, 200X Edition

(**b) Section/Paragraph** 3.3

2. Proposal Recommends (check one): ☐ new text ☒ revised text ☐ deleted text

3. Proposal (include proposed new or revised wording, or identification of wording to be deleted): [Note: Proposed text should be in legislative format, i.e., use underscore to denote wording to be inserted (inserted wording) and strike-through to denote wording to be deleted (~~deleted wording~~).]

Revise definition of effective ground-fault current path to read:

3.3.78 Effective Ground-Fault Current Path. An intentionally constructed, permanent, low impedance electrically conductive path designed and intended to carry ~~underground~~ electric fault current ~~conditions~~ from the point of a ground fault on a wiring system to the electrical supply source.

4. Statement of Problem and Substantiation for Proposal: (Note: State the problem that would be resolved by your recommendation; give the specific reason for your Proposal, including copies of tests, research papers, fire experience, etc. If more than 200 words, it may be abstracted for publication.)

Change uses proper electrical terms.

5. Copyright Assignment

(a) ☐ **I am the author of the text or other material (such as illustrations, graphs) proposed in this Proposal.**

(b) ☒ **Some or all of the text or other material proposed in this Proposal was not authored by me. Its source is as follows** (please identify which material and provide complete information on its source)**:**

ABC Co.

I hereby grant and assign to NFPA all and full rights in copyright in this Proposal and understand that I acquire no rights in any publication of NFPA in which this Proposal in this or another similar or analogous form is used. Except to the extent that I do not have authority to make an assignment in materials that I have identified in (b) above, I hereby warrant that I am the author of this Proposal and that I have full power and authority to enter into this assignment.

Signature (Required)

PLEASE USE SEPARATE FORM FOR EACH PROPOSAL • NFPA Fax: (617) 770-3500

Mail to: Secretary, Standards Council, National Fire Protection Association, 1 Batterymarch Park, Quincy, MA 02169-7471

8/29/2006

SAMPLE

Copyright National Fire Protection Association
Provided by IHS under license with NFPA
No reproduction or networking permitted without license from IHS
Not for Resale

NFPA Technical Committee Document Proposal Form

NOTE: All Proposals must be received by 5:00 p.m. EST/EDST on the published Proposal Closing Date.

For further information on the standards-making process, please contact the Codes and Standards Administration at 617-984-7249.

For technical assistance, please call NFPA at 617-770-3000.

FOR OFFICE USE ONLY

Log #: _____

Date Rec'd: _____

Please indicate in which format you wish to receive your ROP/ROC ☐ electronic ☐ paper ☐ download
(Note: If choosing the download option, you must view the ROP/ROC from our website; no copy will be sent to you.)

Date _____ **Name** _____ **Tel. No.** _____

Company _____

Street Address _____ **City** _____ **State** _____ **Zip** _____

Please indicate organization represented (if any) _____

1. (a) NFPA Document Title _____ **NFPA No. & Year** _____

(b) Section/Paragraph _____

2. Proposal Recommends (check one): ☐ new text ☐ revised text ☐ deleted text

3. Proposal (include proposed new or revised wording, or identification of wording to be deleted): [Note: Proposed text should be in legislative format, i.e., use underscore to denote wording to be inserted (inserted wording) and strike-through to denote wording to be deleted (~~deleted wording~~).]

4. Statement of Problem and Substantiation for Proposal: (Note: State the problem that would be resolved by your recommendation; give the specific reason for your Proposal, including copies of tests, research papers, fire experience, etc. If more than 200 words, it may be abstracted for publication.)

5. Copyright Assignment

(a) ☐ I am the author of the text or other material (such as illustrations, graphs) proposed in this Proposal.

(b) ☐ Some or all of the text or other material proposed in this Proposal was not authored by me. Its source is as follows (please identify which material and provide complete information on its source)**:**

_____

I hereby grant and assign to NFPA all and full rights in copyright in this Proposal and understand that I acquire no rights in any publication of NFPA in which this Proposal in this or another similar or analogous form is used. Except to the extent that I do not have authority to make an assignment in materials that I have identified in (b) above, I hereby warrant that I am the author of this Proposal and that I have full power and authority to enter into this assignment.

Signature (Required) _____

PLEASE USE SEPARATE FORM FOR EACH PROPOSAL • NFPA Fax: (617) 770-3500

Mail to: Secretary, Standards Council, National Fire Protection Association, 1 Batterymarch Park, Quincy, MA 02169-7471

8/29/2006

Copyright National Fire Protection Association
Provided by IHS under license with NFPA
No reproduction or networking permitted without license from IHS
Not for Resale