Errata

NFPA 1992

Standard on Liquid Splash-Protective Ensembles and Clothing for Hazardous Materials Emergencies

2005 Edition

Reference: 7.1.3, 7.2.2, 7.3.2, and 8.4.4.1
Errata No.: 1992-05-1

The Technical Committee on Hazardous Materials Protective Clothing and Equipment notes the following errors in the 2005 edition of NFPA 1992, *Standard on Liquid Splash-Protective Ensembles and Clothing for Hazardous Materials Emergencies*

1. Add the two chemicals Dimethylformanide *and* Nitrobenzene *to paragraphs 7.1.3, 7.2.2, 7.3.2, and 8.4.4.1.*

Issue Date: March 11, 2005

Copyright © 2005 all Rights Reserved
NATIONAL FIRE PROTECTION ASSOCIATION

Copyright National Fire Protection Association
Provided by IHS under license with NFPA
No reproduction or networking permitted without license from IHS
Not for Resale

NFPA 1992

Standard on Liquid Splash-Protective Ensembles and Clothing for Hazardous Materials Emergencies

2005 Edition

NFPA, 1 Batterymarch Park, Quincy, MA 02169-7471
An International Codes and Standards Organization

Copyright National Fire Protection Association
Provided by IHS under license with NFPA
No reproduction or networking permitted without license from IHS
Not for Resale

IMPORTANT NOTICES AND DISCLAIMERS CONCERNING NFPA DOCUMENTS

NOTICE AND DISCLAIMER OF LIABILITY CONCERNING THE USE OF NFPA DOCUMENTS

NFPA codes, standards, recommended practices, and guides, of which the document contained herein is one, are developed through a consensus standards development process approved by the American National Standards Institute. This process brings together volunteers representing varied viewpoints and interests to achieve consensus on fire and other safety issues. While the NFPA administers the process and establishes rules to promote fairness in the development of consensus, it does not independently test, evaluate, or verify the accuracy of any information or the soundness of any judgments contained in its codes and standards.

The NFPA disclaims liability for any personal injury, property or other damages of any nature whatsoever, whether special, indirect, consequential or compensatory, directly or indirectly resulting from the publication, use of, or reliance on this document. The NFPA also makes no guaranty or warranty as to the accuracy or completeness of any information published herein.

In issuing and making this document available, the NFPA is not undertaking to render professional or other services for or on behalf of any person or entity. Nor is the NFPA undertaking to perform any duty owed by any person or entity to someone else. Anyone using this document should rely on his or her own independent judgment or, as appropriate, seek the advice of a competent professional in determining the exercise of reasonable care in any given circumstances.

The NFPA has no power, nor does it undertake, to police or enforce compliance with the contents of this document. Nor does the NFPA list, certify, test or inspect products, designs, or installations for compliance with this document. Any certification or other statement of compliance with the requirements of this document shall not be attributable to the NFPA and is solely the responsibility of the certifier or maker of the statement.

Copyright National Fire Protection Association
Provided by IHS under license with NFPA
No reproduction or networking permitted without license from IHS
Not for Resale

ADDITIONAL NOTICES AND DISCLAIMERS

Updating of NFPA Documents

Users of NFPA codes, standards, recommended practices, and guides should be aware that these documents may be superseded at any time by the issuance of new editions or may be amended from time to time through the issuance of Tentative Interim Amendments. An official NFPA document at any point in time consists of the current edition of the document together with any Tentative Interim Amendments and any Errata then in effect. In order to determine whether a given document is the current edition and whether it has been amended through the issuance of Tentative Interim Amendments or corrected through the issuance of Errata, consult appropriate NFPA publications such as the National Fire Codes® Subscription Service, visit the NFPA website at www.nfpa.org, or contact the NFPA at the address listed below.

Interpretations of NFPA Documents

A statement, written or oral, that is not processed in accordance with Section 6 of the Regulations Governing Committee Projects shall not be considered the official position of NFPA or any of its Committees and shall not be considered to be, nor be relied upon as, a Formal Interpretation.

Patents

The NFPA does not take any position with respect to the validity of any patent rights asserted in connection with any items which are mentioned in or are the subject of NFPA codes, standards, recommended practices, and guides, and the NFPA disclaims liability for the infringement of any patent resulting from the use of or reliance on these documents. Users of these documents are expressly advised that determination of the validity of any such patent rights, and the risk of infringement of such rights, is entirely their own responsibility.

NFPA adheres to applicable policies of the American National Standards Institute with respect to patents. For further information contact the NFPA at the address listed below.

Law and Regulations

Users of these documents should consult applicable federal, state, and local laws and regulations. NFPA does not, by the publication of its codes, standards, recommended practices, and guides, intend to urge action that is not in compliance with applicable laws, and these documents may not be construed as doing so.

Copyrights

This document is copyrighted by the NFPA. It is made available for a wide variety of both public and private uses. These include both use, by reference, in laws and regulations, and use in private self-regulation, standardization, and the promotion of safe practices and methods. By making this document available for use and adoption by public authorities and private users, the NFPA does not waive any rights in copyright to this document.

Use of NFPA documents for regulatory purposes should be accomplished through adoption by reference. The term "adoption by reference" means the citing of title, edition, and publishing information only. Any deletions, additions, and changes desired by the adopting authority should be noted separately in the adopting instrument. In order to assist NFPA in following the uses made of its documents, adopting authorities are requested to notify the NFPA (Attention: Secretary, Standards Council) in writing of such use. For technical assistance and questions concerning adoption of NFPA documents, contact NFPA at the address below.

For Further Information

All questions or other communications relating to NFPA codes, standards, recommended practices, and guides and all requests for information on NFPA procedures governing its codes and standards development process, including information on the procedures for requesting Formal Interpretations, for proposing Tentative Interim Amendments, and for proposing revisions to NFPA documents during regular revision cycles, should be sent to NFPA headquarters, addressed to the attention of the Secretary, Standards Council, NFPA, 1 Batterymarch Park, P.O. Box 9101, Quincy, MA 02269-9101.

For more information about NFPA, visit the NFPA website at www.nfpa.org.

Copyright National Fire Protection Association
Provided by IHS under license with NFPA
No reproduction or networking permitted without license from IHS
Not for Resale

Copyright © 2005, National Fire Protection Association, All Rights Reserved

NFPA 1992

Standard on

Liquid Splash-Protective Ensembles and Clothing for Hazardous Materials Emergencies

2005 Edition

This edition of NFPA 1992, *Standard on Liquid Splash-Protective Ensembles and Clothing for Hazardous Materials Emergencies*, was prepared by the Technical Committee on Hazardous Materials Protective Clothing and Equipment, released by the Technical Correlating Committee on Fire and Emergency Services Protective Clothing and Equipment, and acted on by NFPA at its November Association Technical Meeting held November 13–17, 2004, in Miami Beach, FL. It was issued by the Standards Council on January 14, 2005, with an effective date of February 7, 2005, and supersedes all previous editions.

This edition of NFPA 1992 was approved as an American National Standard on February 7, 2005.

Origin and Development of NFPA 1992

In 1985, the National Transportation Safety Board (NTSB) issued report I-004-5 on a hazardous material incident that occurred in Benicia, California. In that report, the NTSB recommended that standards be developed for protective clothing for protection from hazardous chemicals. The United States Department of Transportation (DOT) issued a position that requested private sector standards development to undertake the project of writing the standards on hazardous chemical protective clothing and asked other governmental agencies to assist and participate in the private sector standards development system. DOT at this time also directly requested that the NFPA develop documents on hazardous chemical protective clothing. The Environmental Protection Agency (EPA), the United States Coast Guard (USCG), the Federal Emergency Management Agency (FEMA), and the Occupational Safety and Health Administration (OSHA) either adopted position statements modeled after the DOT position or endorsed the DOT position.

During 1985, the NFPA Standards Council approved a project for development of these standards and assigned the project to the Technical Committee on Fire Service Protective Clothing and Equipment. The Technical Committee on Fire Service Protective Clothing and Equipment established a standing Subcommittee on Hazardous Chemicals Protective Clothing, and they began their work in Phoenix, Arizona, in March 1986. Representatives from the USCG, FEMA, and OSHA participated on the subcommittee.

At the same time, ASTM was developing a document on a selection of chemicals for evaluating protective clothing materials that would serve as one of several ASTM testing criteria that would be referenced in the NFPA standards.

The subcommittee met several times over a 2½-year period at different locations across the country and developed two standards, one for vapor-protective protection and one for liquid splash-protective protection.

NFPA 1991 addresses vapor-protective ensembles designed to protect emergency response personnel against exposure to specified chemicals in vapor and liquid splash environments during hazardous materials emergencies. Chemical permeation resistance documentation is required for primary suit materials (garment, visor, gloves, and boots) against each chemical in the NFPA battery of chemicals and any additional chemicals or specific chemical mixtures for which the manufacturer is certifying the suit. The NFPA battery of chemicals consists of 21 chemicals: those specified in ASTM F 1001, *Standard Guide for Chemicals to Evaluate Protective Clothing Materials*. These chemicals were selected because they are representative of the classes of chemicals that are encountered during hazardous chemical emergencies.

The standard includes performance requirements that were established to reflect simulated use conditions. A suit pressurization test is used to check the airtight integrity of each protective suit. Also, an overall suit water penetration test is designed to ensure the suit provides full body protection against liquid splashes. Primary suit materials must resist permeation for 1 hour or more by each chemical in the NFPA battery. Manufacturers can certify protective suits for additional chemicals when the same permeation performance is met. Also included are penetration resistance testing of closures and leak and cracking pressure tests for exhaust valves. These tests allow determination of adequate suit component performance in hazardous chemical environments.

Copyright National Fire Protection Association
Provided by IHS under license with NFPA
No reproduction or networking permitted without license from IHS
Not for Resale

Material testing for burst strength, tear strength, abrasion resistance, flammability resistance, cold temperature performance, and flexural fatigue are required so that materials used for vapor-protective suits will afford adequate protection in the environment where they will be used.

NFPA 1992 addresses liquid splash-protective ensembles and clothing designed to protect emergency response personnel against exposure to specified chemicals in liquid splash environments during hazardous materials emergencies. Chemical penetration resistance documentation of garment material against an NFPA battery of test chemicals and any additional chemicals or specific chemical mixtures for which the manufacturer is certifying the suit is required. The NFPA battery of chemicals were selected from ASTM F 1001, *Standard Guide for Chemicals to Evaluate Protective Clothing Materials*. These do not include liquid chemicals with known or suspected carcinogenicity or skin toxicity because these garments deal with skin exposure and not inhalation. This criterion produces a different subset of ASTM F 1001 chemicals to be certified.

The standard includes performance requirements that were established to reflect simulated use conditions. An overall suit water penetration test is included to ensure the suit provides full body splash protection. Materials testing includes burst strength, tear resistance, flammability resistance testing, abrasion resistance, cold temperature performance, and flexural fatigue testing. These tests are required so that garment materials will provide adequate protection in the environment in which they will be used.

The first edition of NFPA 1992 was voted on by the Association at the 1989 Fall Meeting in Seattle, WA, on November 15, 1989, and had an effective date of February 5, 1990.

The Subcommittee on Hazardous Chemicals Protective Clothing began an early revision (4-year cycle) of the 1990 edition of NFPA 1992 in December 1991. During 1993, the NFPA restructured the manner in which committees were organized, and all standing subcommittees were eliminated. Within the Technical Committee on Fire Service Protective Clothing and Equipment, the former standing subcommittees were reorganized as task groups to address specific technical issues, and the technical committee assumed the entire responsibility for NFPA 1992.

The second edition of NFPA 1992 encompassed revised scope and purpose sections to include optional components for enhanced protection and replacement items. Test methods were updated and refined to better ensure repeatability of testing results. Extensive changes were made to the product labels to better accommodate the optional and replacement items.

The second edition was acted on by the membership of the Association at the NFPA Annual Meeting in San Francisco, CA, on May 18, 1994, and was issued with an effective date of August 5, 1994.

Since the second edition, the entire project for fire service protective clothing and equipment was reorganized, in January 1995, by the Standards Council. The new project has a Technical Correlating Committee on Fire and Emergency Services Protective Clothing and Equipment and seven technical committees operating within the project. The former standing Subcommittee on Hazardous Chemicals Protective Clothing was established as the new Technical Committee on Hazardous Materials Protective Clothing and Equipment and has the responsibility for NFPA 1992.

The third edition had a title change to *Standard on Liquid Splash-Protective Ensembles and Clothing for Hazardous Materials Emergencies*, and was a complete revision to the second edition. It addressed the protection as an ensemble in addition to individual items of protective clothing. It also combined certain requirements for liquid-splash protection for support function activities from the former NFPA 1993, *Standard on Support Function Protective Clothing for Hazardous Chemical Operations*, the 1994 edition, which was withdrawn on January 14, 2000. Protective clothing certified as compliant with NFPA 1993 was seldom used by hazardous materials incident responders. More practical requirements for liquid splash-protective ensembles and clothing used for response and support activities were included in this edition of NFPA 1992.

The third edition was presented to the Association membership at the 1999 November Meeting in New Orleans, LA, on November 17, 1999, and issued by the Standards Council with an effective date of February 11, 2000.

This 2005 edition (fourth edition) of NFPA 1992 is once again a complete revision and is now reformatted according to the new style for all NFPA codes and standards. Because of the new style, most of the chapter numbering, as well as paragraph numbering, has changed. While this edition's content is in a different order than in previous editions, all the material is here, and the table of contents will quickly direct users of the document to the appropriate chapters and sections. The Committee has included in Chapter 4 new requirements for manufacturers' quality assurance programs and for situations where hazards involving compliant products are believed to exist, including the appropriate actions in addressing these situations if there is a previously unknown threat to the users. These new requirements apply to all fire and emergency services product standards that are the responsibility of this project. All design, performance, and testing requirements have been reviewed and refined as necessary.

This fourth edition was presented to the Association membership at the 2004 November meeting in Miami Beach, FLA on 17 November 2004, and issued by the Standards Council with an effective date of 7 February 2005.

In Memoriam, 11 September 2001

We pay tribute to the 343 members of FDNY who gave their lives to save civilian victims on 11 September 2001, at the World Trade Center. They are true American heroes in death, but they were also American heroes in life. We will keep them in our memory and in our hearts. They are the embodiment of courage, bravery, and dedication. May they rest in peace.

Copyright National Fire Protection Association
Provided by IHS under license with NFPA
No reproduction or networking permitted without license from IHS
Not for Resale

Technical Correlating Committee on Fire and Emergency Services Protective Clothing and Equipment

Richard M. Duffy, *Chair*
International Association of Fire Fighters, DC [L]
Rep. International Association of Fire Fighters

William M. Lambert, *Secretary*
Mine Safety Appliances Company, PA [M]
Rep. Compressed Gas Association

Leslie Anderson, USDA Forest Service, MT [E]
Roger L. Barker, North Carolina State University, NC [SE]
Nicholas J. Curtis, Lion Apparel, Inc., OH [M]
Robert A. Freese, Globe Manufacturing Company, NH [M]
Andy Gbur, Intertek, OH [RT]
Bill Grilliot, Morning Pride Manufacturing, LLC, OH [M]
Rep. Fire and Emergency Manufacturers and Services Association Inc.
William E. Haskell, III, Battelle Memorial Institute, MA [RT]
Virgil Hathaway, San Diego Fire Department, CA [U]
Rep. Southern Area Fire Equipment Research
Kimberly M. Henry, Celanese Advanced Materials Inc., NC [M]
James S. Johnson, Lawrence Livermore National Laboratory, CA [RT]
Cy Long, Texas Commission on Fire Protection, TX [E]
David G. Matthews, Fire & Industrial (P.P.E) Ltd., England [SE]
Richard W. Metzler, U.S. Department of Health and Human Services, PA [RT]
Jim Minx, Oklahoma State Firefighters Association, OK [C]
Rep. Oklahoma State Firefighters Association
Stephen R. Sanders, Safety Equipment Institute (SEI), VA [RT]
Denise N. Statham, Southern Mills, Inc., GA [M]
Jeffrey O. Stull, International Personnel Protection, Inc., TX [SE]
David Trivette, Tyco/Scott Health & Safety, NC [M]
Rep. International Safety Equipment Association
Robert D. Tutterow, Jr., Charlotte Fire Department, NC [U]
Rep. Fire Industry Equipment Research Organization
Harry P. Winer, U.S. Department of the Navy, MA [RT]
Thomas L. Wollan, Underwriters Laboratories Inc., NC [RT]

Alternates

Richard W. Blocker, Jr., The DuPont Company, VA [M]
(Alt. to K. M. Henry)
Leslie F. Boord, U.S. Department of Health and Human Services, PA [RT]
(Alt. to R. W. Metzler)
Janice C. Bradley, International Safety Equipment Association, VA [M]
(Alt. to D. Trivette)
Steven D. Corrado, Underwriters Laboratories Inc., NC [RT]
(Alt. to T. L. Wollan)
Patricia A. Freeman, Globe Manufacturing Company, NH [M]
(Alt. to R. A. Freese)
Patricia A. Gleason, Safety Equipment Institute (SEI), VA [RT]
(Alt. to S. R. Sanders)
Mary I. Grilliot, TFG/Morning Pride Manufacturing, LLC, OH [M]
(Alt. to B. Grilliot)
Steven B. Lumry, Oklahoma City Fire Department, OK [C]
(Alt. to J. Minx)
Frank P. Taylor, Lion Apparel, Inc., VA [M]
(Alt. to N. J. Curtis)

Nonvoting

Donna P. Brehm, Virginia Beach Fire Department, VA [U]
Rep. TC on Emergency Medical Services PC&E
Don R. Forrest, United Firefighters of Los Angeles City, CA [L]
Rep. TC on Special Operations PC&E
George M. Jackson, USDA Forest Service, MT [E]
Rep. TC on Wildland Fire Fighting PC&E
Glenn P. Jirka, Miami Township Fire & EMS Division, OH [E]
Rep. TC on Hazardous Materials PC&E
Kirk Owen, Plano Fire Department, TX [U]
Rep. TC on Structural and Proximity Fire Fighting PC&E
Ray F. Reed, Dallas Fire Department, TX [U]
Rep. TC on Respiratory Protection Equipment
Bruce H. Varner, Santa Rosa Fire Department, CA [E]
Rep. TC on Electronic Safety Equipment

Bruce W. Teele, NFPA Staff Liaison

This list represents the membership at the time the Committee was balloted on the final text of this edition. Since that time, changes in the membership may have occurred. A key to classifications is found at the back of the document.

NOTE: Membership on a committee shall not in and of itself constitute an endorsement of the Association or any document developed by the committee on which the member serves.

Committee Scope: This Committee shall have primary responsibility for documents on the design, performance, testing, and certification of protective clothing and protective equipment manufactured for fire and emergency services organizations and personnel, to protect against exposures encountered during emergency incident operations. This Committee shall also have the primary responsibility for documents on the selection, care, and maintenance of such protective clothing and protective equipment by fire and emergency services organizations and personnel.

Copyright National Fire Protection Association
Provided by IHS under license with NFPA
No reproduction or networking permitted without license from IHS
Not for Resale

Technical Committee on Hazardous Materials Protective Clothing and Equipment

Glenn P. Jirka, *Chair*
Miami Township Fire & EMS Division, OH [E]
Rep. The InterAgency Board

Patricia A. Gleason, *Secretary*
Safety Equipment Institute (SEI), VA [RT]

William Alexander, Onguard Industries, MD [M]
Jeffrey B. Borkowski, Fire Department, City of New York, NY [U]
Steven D. Corrado, Underwriters Laboratories Inc., NC [RT]
Wade G. DeHate, Hillsborough County Fire Rescue, FL [E]
Steven M. De Lisi, Virginia Air National Guard, VA [U]
Jan Dunbar, El Dorado Hills, CA [E]
Rep. International Association of Fire Chiefs
Daniel Gohlke, W. L. Gore & Associates, MD [M]
Kevin W. Klamser, U.S. Navy Coastal Systems Station, FL [RT]
Brett LaFrance, Intertek-ETL Semko, NY [RT]
Karen E. Lehtonen, Lion Apparel, Inc., OH [M]
Trudy J. Lewis, Battelle Memorial Institute, OH [RT]
Ulf Nystrom, Trelleborg Protective Products AB, Sweden [M]
Louis V. Ott, Gentex Corporation, PA [M]
Rep. International Safety Equipment Association
Kenneth A. Pever, Guardian Manufacturing Company, OH [M]
Mel Seng, TFG/Norcross Safety Products, IL [M]
Jeffrey O. Stull, International Personnel Protection, Inc., TX [SE]
Jonathan V. Szalajda, U.S. Department of Health and Human Services, PA [E]
Robert West, Texas Instruments, TX [U]
James P. Zeigler, DuPont Personal Protection, VA [M]
Michael Ziskin, Field Safety Corporation, CT [RT]

Alternates

Dale Gregory Beggs, Texas Instruments, TX [U]
(Alt. to R. West)
Nicholas J. Curtis, Lion Apparel, Inc., OH [M]
(Alt. to K. E. Lehtonen)
Andy Gbur, Intertek, OH [RT]
(Alt. to B. LaFrance)
Russell R. Greene, Battelle Memorial Institute, OH [RT]
(Alt. to T. J. Lewis)
A. Ira Harkness, U.S. Department of the Navy, FL [RT]
(Alt. to K. W. Klamser)
Thomas M. Pease, Gentex Corporation, PA [M]
(Alt. to L. V. Ott)
John Reilly, Total Fire Group, OH [M]
(Alt. to M. Seng)
Angie M. Shepherd, Underwriters Laboratories Inc., NC [RT]
(Alt. to S. D. Corrado)

Bruce W. Teele, NFPA Staff Liaison

This list represents the membership at the time the Committee was balloted on the final text of this edition. Since that time, changes in the membership may have occurred. A key to classifications is found at the back of the document.

NOTE: Membership on a committee shall not in and of itself constitute an endorsement of the Association or any document developed by the committee on which the member serves.

Committee Scope: This Committee shall have primary responsibility for documents on protective clothing and protective equipment, except respiratory protective equipment, that provides hand, foot, torso, limb, and head protection for fire fighters and other emergency services responders during incidents that involve hazardous materials operations. These operations involve the activities of rescue; hazardous material confinement, containment, and mitigation; and property conservation where exposure to substances that present an unusual danger to responders are present or could occur due to toxicity, chemical reactivity, decomposition, corrosiveness, or similar reactions.

Additionally, this Committee shall have primary responsibility for documents on the selection, care, and maintenance of hazardous materials protective clothing and protective equipment by fire and emergency services organizations and personnel.

Copyright National Fire Protection Association
Provided by IHS under license with NFPA
No reproduction or networking permitted without license from IHS
Not for Resale

Contents

Chapter 1 Administration **1992–** 6
1.1 Scope **1992–** 6
1.2 Purpose **1992–** 6
1.3 Application **1992–** 6
1.4 Units **1992–** 7

Chapter 2 Referenced Publications **1992–** 7
2.1 General **1992–** 7
2.2 NFPA Publications **1992–** 7
2.3 Other Publications **1992–** 7

Chapter 3 Definitions **1992–** 8
3.1 General **1992–** 8
3.2 NFPA Official Definitions **1992–** 8
3.3 General Definitions **1992–** 8

Chapter 4 Certification **1992–**10
4.1 General **1992–**10
4.2 Certification Program **1992–**10
4.3 Inspection and Testing **1992–**11
4.4 Annual Verification of Product Compliance **1992–**12
4.5 Manufacturers' Quality Assurance Program **1992–**13
4.6 Hazards Involving Compliant Product ... **1992–**13
4.7 Manufacturers' Investigation of Complaints and Returns **1992–**14
4.8 Manufacturers' Safety Alert and Product Recall Systems **1992–**14

Chapter 5 Labeling and Information **1992–**14
5.1 Product Label Requirements **1992–**14
5.2 User Information **1992–**16
5.3 Technical Data Package **1992–**17

Chapter 6 Design Requirements **1992–**17
6.1 Protective Garment Elements and Items Design Requirements **1992–**17
6.2 Protective Glove Elements and Items Design Requirements **1992–**17
6.3 Protective Footwear Elements and Items Design Requirements **1992–**18
6.4 Nonencapsulating Ensemble Design Requirements **1992–**18
6.5 Encapsulating Ensemble Design Requirements **1992–**18
6.6 Optional Chemical Flash Fire Protection Design Requirements **1992–**19

Chapter 7 Performance Requirements **1992–**19
7.1 Protective Garment Elements and Items Performance Requirements **1992–**19
7.2 Protective Glove Elements and Items Performance Requirements **1992–**20
7.3 Protective Footwear Elements and Items Performance Requirements **1992–**20
7.4 Nonencapsulating Protective Ensemble Performance Requirements **1992–**20
7.5 Encapsulating Protective Ensemble Performance Requirements **1992–**20
7.6 Optional Chemical Flash Fire Escape Protection Performance Requirements **1992–**21

Chapter 8 Test Methods **1992–**21
8.1 Sample Preparation Procedures **1992–**21
8.2 Liquidtight Integrity Test 1 ..... **1992–**21
8.3 Overall Garment Function and Integrity Test **1992–**22
8.4 Chemical Penetration Resistance Test **1992–**23
8.5 Burst Strength Test **1992–**24
8.6 Puncture Propagation Tear Resistance Test **1992–**24
8.7 Cold Temperature Performance Test 1 ... **1992–**25
8.8 Seam/Closure Breaking Strength Test ... **1992–**25
8.9 Cold Temperature Performance Test 2 ... **1992–**26
8.10 Liquidtight Integrity Test 2 ..... **1992–**26
8.11 Cut Resistance Test **1992–**26
8.12 Puncture Resistance Test 1 ..... **1992–**27
8.13 Gloved Hand Dexterity Test **1992–**27
8.14 Puncture Resistance Test 2 ..... **1992–**27
8.15 Abrasion Resistance Test **1992–**28
8.16 Impact and Compression Test **1992–**28
8.17 Ladder Shank Bend Resistance Test **1992–**28
8.18 Slip Resistance Test **1992–**28
8.19 Overall Ensemble Flash Test **1992–**29
8.20 Thermal Protective Performance Test **1992–**30
8.21 Flammability Resistance Test **1992–**31

Annex A Explanatory Material **1992–**31

Annex B Informational References **1992–**34

Index **1992–**36

Copyright National Fire Protection Association
Provided by IHS under license with NFPA
No reproduction or networking permitted without license from IHS
Not for Resale

NFPA 1992

Standard on

Liquid Splash-Protective Ensembles and Clothing for Hazardous Materials Emergencies

2005 Edition

IMPORTANT NOTE: This NFPA document is made available for use subject to important notices and legal disclaimers. These notices and disclaimers appear in all publications containing this document and may be found under the heading "Important Notices and Disclaimers Concerning NFPA Documents." They can also be obtained on request from NFPA or viewed at www.nfpa.org/disclaimers.

NOTICE: An asterisk (*) following the number or letter designating a paragraph indicates that explanatory material on the paragraph can be found in Annex A.

Information on referenced publications can be found in Chapter 2 and Annex B.

Chapter 1 Administration

1.1 Scope.

1.1.1* This standard shall specify minimum requirements for the design, performance, testing, documentation, and certification for liquid splash-protective ensembles, ensemble elements, and protective clothing used by emergency response personnel during hazardous materials incidents.

1.1.2 This standard shall also specify additional *optional* criteria for liquid splash-protective ensembles for *escape protection only* from chemical flash fires encountered during hazardous materials incidents.

1.1.3 This standard shall specify requirements for new liquid splash-protective ensembles, new ensemble elements, and new protective clothing.

1.1.4* This standard alone shall not specify requirements for protective ensembles or clothing for hazardous materials emergencies involving known or suspected human carcinogen, or hazardous materials with known skin toxicity that are present as vapors, or hazardous material vapor atmospheres.

1.1.5* This standard alone shall not specify requirements for protection from chemical or biological terrorism agents or from chemical or biological terrorism incidents. Requirements for such protection shall be provided by protective ensembles that are certified as compliant with NFPA 1994, *Standard on Protective Ensembles for Chemical/Biological Terrorism Incidents*, or ensembles that are certified as compliant with NFPA 1991, *Standard on Vapor-Protective Ensembles for Hazardous Materials Emergencies*.

1.1.6* This standard alone shall not specify requirements for protective clothing for any fire fighting applications.

1.1.7* This standard alone shall not specify requirements for protection from ionizing radiation, biological, liquefied gas, or cryogenic liquid hazards, or from explosive atmospheres.

1.1.8 This standard shall not specify requirements for the respiratory protection that is necessary for proper protection with the protective ensemble.

1.1.9 This standard shall not specify requirements for any accessories that could be attached to the product but are not necessary for the product to meet the requirements of this standard.

1.1.10 Certification of compliant liquid splash-protective ensembles, ensemble elements, and protective clothing to the requirements of this standard shall not preclude certification to additional appropriate standards where the ensemble, ensemble elements, or protective clothing meet all the applicable requirements of each standard.

1.1.11 This standard shall not be construed as addressing all of the safety concerns, if any, associated with its use for the designing, manufacturing, testing, or certifying of product to meet the requirements of this standard. It shall be the responsibility of the persons and organizations that use this standard to establish safety and health practices and determine the applicability of regulatory limitations prior to use of this standard.

1.1.12 Nothing herein shall restrict any jurisdiction or manufacturer from exceeding these minimum requirements.

1.2 Purpose.

1.2.1* The purpose of this standard shall be to establish a minimum level of protection for emergency response personnel against adverse liquid-splash environments during hazardous materials emergency incidents.

1.2.1.1 The purpose of this standard shall also be to establish a minimum level of *limited* chemical flash fire protection, *for escape only* in the event of a chemical flash fire, as an option for compliant liquid splash-protective ensembles, ensemble elements, and protective clothing.

1.2.1.2 The purpose of this option shall be to provide emergency response organizations the flexibility to specify this option in their purchase specifications according to the anticipated exposure and expected needs of the emergency response organization.

1.2.2* Controlled laboratory tests used to determine compliance with the performance requirements of this standard shall not be deemed as establishing performance levels for all situations to which personnel can be exposed.

1.2.3 This standard is not intended to be utilized as a detailed manufacturing or purchase specification, but shall be permitted to be referenced in purchase specifications as minimum requirements.

1.3 Application.

1.3.1 This standard shall apply to the design, manufacturing, testing, and certification of new liquid splash-protective ensembles, new ensemble elements, and new protective clothing.

1.3.2 This standard alone shall not apply to protective ensembles or clothing for hazardous materials emergencies involving known or suspected human carcinogen, or hazardous materials with known skin toxicity that are present as vapors, or hazardous material vapor atmospheres.

1.3.3 This edition of NFPA 1992 shall not apply to liquid splash-protective ensembles, ensemble elements, and protective clothing manufactured to previous editions of this standard.

1.3.4 This standard alone shall not apply to protective clothing for any fire-fighting applications.

1.3.5 This standard alone shall not apply to protective clothing for protection from ionizing radiation, cryogenic liquid hazards, or explosive atmospheres.

Copyright National Fire Protection Association
Provided by IHS under license with NFPA
No reproduction or networking permitted without license from IHS
Not for Resale

1.3.6 This standard shall not apply to the respiratory protection that is necessary for proper protection with the liquid splash-protective ensemble or protective clothing.

1.3.7 This standard shall not apply to use requirements for liquid splash-protective ensembles or protective clothing as these requirements are specified in NFPA 1500, *Standard on Fire Department Occupational Safety and Health Program.*

1.3.8* The requirements of this standard shall not apply to any accessories that could be attached to the product but are not necessary for the product to meet the requirements of this standard.

1.4* Units.

1.4.1 In this standard, values for measurement are followed by an equivalent in parentheses, but only the first stated value shall be regarded as the requirement.

1.4.2 Equivalent values in parentheses shall not be considered as the requirement, as these values are approximate.

Chapter 2 Referenced Publications

2.1 General. The documents or portions thereof listed in this chapter are referenced within this standard and shall be considered part of the requirements of this document.

2.2 NFPA Publications. National Fire Protection Association, 1 Batterymarch Park, Quincy, MA 02169-7471.

NFPA 1500, *Standard on Fire Department Occupational Safety and Health Program,* 2002 edition.

NFPA 1981, *Standard on Open-Circuit Self-Contained Breathing Apparatus for Fire and Emergency Services,* 2002 edition.

NFPA 1991, *Standard on Vapor-Protective Ensembles for Hazardous Materials Emergencies,* 2005 edition.

NFPA 1994, *Standard on Protective Ensembles for Chemical/Biological Terrorism Incidents,* 2001 edition.

2.3 Other Publications.

2.3.1 ANSI Publications. American National Standards Institute, Inc., 25 West 43rd Street, 4th Floor, New York, NY 10036.

ANSI Z41, *Standard for Personal Protection — Protective Footwear*, 1999.

ANSI Z89.1, *Standard for Industrial Head Protection*, 2003.

2.3.2 ASTM Publications. American Society for Testing and Materials, 100 Barr Harbor Drive, West Conshohocken, PA 19428-2959.

ASTM D 747, *Standard Test Method for Apparent Bending Modulus of Plastics by Means of a Cantilever Beam*, 1993.

ASTM D 751, *Standard Test Methods for Coated Fabrics*, 1998.

ASTM D 1630, *Standard Test Method for Rubber Property — Abrasion Resistance (NBS Abrader)*, 1994.

ASTM D 2136, *Standard Test Method for Coated Fabrics — Low-Temperature Bend Test*, 1998.

ASTM D 2582, *Standard Test Method for Puncture Propagation Tear Resistance of Plastic Film and Thin Sheeting*, 1993.

ASTM D 4157, *Standard Test Method for Abrasion Resistance of Textile Fabrics (Oscillatory Cylinder Method)*, 1992.

ASTM D 5151, *Standard Test Method for Detection of Holes in Medical Gloves*, 1992.

ASTM F 392, *Standard Test Method for Flex Durability of Flexible Barrier Materials*, 1993.

ASTM F 489, *Standard Test Method for Static Coefficient of Friction of Shoe Sole and Heel Materials as Measured by the James Machine*, 1996.

ASTM F 903, *Standard Test Method for Resistance of Protective Clothing Materials to Penetration by Liquids*, 1996.

ASTM F 1154, *Standard Practices for Qualitatively Evaluating the Comfort, Fit, Function, and Integrity of Chemical Protective Suit Ensembles*, 1996.

ASTM F 1301, *Standard Practice for Labeling Chemical Protective Clothing*, 1996.

ASTM F 1342, *Standard Test Method for Resistance of Protective Clothing Materials to Puncture*, 1996.

ASTM F 1358, *Standard Test Method for Resistance of Protective Clothing Materials to Flame Impingement*, 1995.

ASTM F 1359, *Standard Test Method for Measuring Liquid Penetration Resistance of Protective Clothing or Protective Ensembles Under a Shower Spray While on a Mannequin*, 1997.

ASTM F 1790, *Standard Test Methods for Measuring Cut Resistance of Materials Used in Protective Clothing*, 2004.

ASTM F 2010, *Standard Test Method for Evaluation of Glove Effects on Wearer Hand Dexterity Using a Modified Pegboard Test*, 2000.

2.3.3 FIA Publication. Footwear Industries of America, 1420 K Street NW, Suite 600, Washington, DC 20005.

FIA Standard 1209, *Whole Shoe Flex*, 1984.

2.3.4 ISO Publications. International Organization for Standardization, 1 rue de Varembé, Case postale 56, CH-1211 Geneve 20, Switzerland.

ISO 27, *Guidelines for corrective action to be taken by a certification body in the event of misuse of its mark of conformity,* 1983.

ISO 65, *General requirements for bodies operating product certification systems,* 1996.

ISO 9001, *Quality management systems — requirements,* 2000.

ISO 17011, *General requirements for accreditation bodies accrediting conformity assessment bodies,* 2004.

ISO 17025, *General requirements for the competence of testing and calibration laboratories,* 1999.

ISO 17492, *Clothing for protection against heat and flame — determination of heat transmission on exposure to both flame and radiant heat,* 2003.

2.3.5 U.S. Government Publication. U.S. Government Printing Office, Washington, DC 20402.

Title 29, Code of Federal Regulations, Part 1910.132.

2.3.6 Additional Publications. *Dangerous Properties of Industrial Chemicals*, 6th Edition, Sax, N. Irving, 1996.

NIOSH Pocket Guide to Chemical Hazards, U.S. Department of Health and Human Services, Public Health Services, Publication DHHS No. 85-114, September 1996.

Threshold Limit Values for Chemical Substances and Physical Agents and Biological Exposure Indices, American Conference of Governmental Industrial Hygienists, 1996.

Copyright National Fire Protection Association
Provided by IHS under license with NFPA
No reproduction or networking permitted without license from IHS
Not for Resale

Chapter 3 Definitions

3.1 General. The definitions contained in this chapter shall apply to the terms used in this standard. Where terms are not defined in this chapter or within another chapter, they shall be defined using their ordinarily accepted meanings within the context in which they are used. *Merriam-Webster's Collegiate Dictionary,* 11th edition, shall be the source for the ordinarily accepted meaning.

3.2 NFPA Official Definitions.

3.2.1* Approved. Acceptable to the authority having jurisdiction.

3.2.2* Authority Having Jurisdiction (AHJ). An organization, office, or individual responsible for enforcing the requirements of a code or standard, or for approving equipment, materials, an installation, or a procedure.

3.2.3 Labeled. Equipment or materials to which has been attached a label, symbol, or other identifying mark of an organization that is acceptable to the authority having jurisdiction and concerned with product evaluation, that maintains periodic inspection of production of labeled equipment or materials, and by whose labeling the manufacturer indicates compliance with appropriate standards or performance in a specified manner.

3.2.4* Listed. Equipment, materials, or services included in a list published by an organization that is acceptable to the authority having jurisdiction and concerned with evaluation of products or services, that maintains periodic inspection of production of listed equipment or materials or periodic evaluation of services, and whose listing states that either the equipment, material, or service meets appropriate designated standards or has been tested and found suitable for a specified purpose.

3.2.5 Shall. Indicates a mandatory requirement.

3.2.6 Should. Indicates a recommendation or that which is advised but not required.

3.2.7 Standard. A document, the main text of which contains only mandatory provisions using the word "shall" to indicate requirements and which is in a form generally suitable for mandatory reference by another standard or code or for adoption into law. Nonmandatory provisions shall be located in an appendix or annex, footnote, or fine-print note and are not to be considered a part of the requirements of a standard.

3.3 General Definitions.

3.3.1 Afterflame Time. The length of time for which a material, component, or chemical protective suit continues to burn after the simulated chemical flash fire has ended.

3.3.2 Biological Agents. Biological materials that are capable of causing disease or long-term damage to the human body.

3.3.3 Boot. See 3.3.40, Liquid Splash-Protective Footwear.

3.3.4 Bootie. A sock-like extension of the garment or suit leg that covers the entire foot.

3.3.5 Care. Procedures for cleaning, decontamination, and storage of protective clothing and equipment.

3.3.6 Certification/Certified. A system whereby a certification organization determines that a manufacturer has demonstrated the ability to produce a product that complies with the requirements of this standard, authorizes the manufacturer to use a label on listed products that comply with the requirements of this standard, and establishes a follow-up program conducted by the certification organization as a check on the methods the manufacturer uses to determine continued compliance of labeled and listed products with the requirements of this standard.

3.3.7 Certification Organization. An independent, third party organization that determines product compliance with the requirements of this standard with a labeling/listing/follow-up program.

3.3.8 Chemical and Biological Terrorism Incidents. Situations involving the release of chemical or biological warfare agents in civilian areas by terrorists.

3.3.9* Chemical Flash Fire. The ignition of a flammable and ignitable vapor or gas that produces an outward expanding flame front as those vapors or gases burn. This burning and expanding flame front, a fireball, will release both thermal and kinetic energy to the environment.

3.3.10* Chemical-Protection Layer. The material or composite used in an ensemble or clothing for the purpose of providing protection from chemical hazards.

3.3.11 Chemical-Protective Material. Any material or composite used in liquid splash-protective ensemble or clothing for the purpose of providing protection from chemical hazards; can be a part of the "primary suit material."

3.3.12 Clothing Items. See 3.3.38, Liquid Splash-Protective Clothing.

3.3.13 Compliance/Compliant. Meeting or exceeding all applicable requirements of this standard.

3.3.14* Component(s). Any material, part, or subassembly used in the construction of the compliant product.

3.3.15 Composite. The layer or layers of materials or components.

3.3.16* Cryogenic Liquid. A refrigerated liquefied gas having a boiling point below –130°F (–90°C) at atmospheric pressure.

3.3.17 Element(s). See 3.3.21, Ensemble Elements.

3.3.18 Emergency Response Personnel. Personnel assigned to organizations that have the responsibility for responding to hazardous materials emergencies.

3.3.19 Encapsulating. A type of ensemble that provides vapor- or gastight protection, or liquidtight protection, or both, and completely covers the wearer and the wearer's respirator.

3.3.20 Ensemble. See 3.3.39, Liquid Splash-Protective Ensemble.

3.3.21* Ensemble Elements. The compliant products that provide protection to the upper and lower torso, arms, legs, head, hands, and feet.

3.3.22 Exhaust Valve. One-way vent that releases exhaust to the outside environment and prevents entry of outside environment.

3.3.23* External Fittings. Any component that allows the passage of gases, liquids, or electrical current from the outside to the inside of the element or item. Any fitting externally located on, and part of, the ensemble which is not part of the garment material, visor material, gloves, footwear, seams, or closure assembly.

Copyright National Fire Protection Association
Provided by IHS under license with NFPA
No reproduction or networking permitted without license from IHS
Not for Resale

3.3.24 Flammable or Explosive Atmospheres. Atmospheres containing solids, liquids, vapors, or gases at concentrations that will burn or explode if ignited.

3.3.25 Follow-Up Program. The sampling, inspections, tests, or other measures conducted by the certification organization on a periodic basis to determine the continued compliance of labeled or listed products that are being produced by the manufacturer to the requirements of this standard.

3.3.26 Footwear. See 3.3.40, Liquid Splash-Protective Footwear.

3.3.27 Footwear Upper. That portion of the footwear above the sole, heel, or insole.

3.3.28 Garment. See 3.3.41, Liquid Splash-Protective Garment.

3.3.29 Garment Closure. The garment component designed and configured to allow the wearer to don (put-on) and doff (take-off) the garment.

3.3.30 Garment Closure Assembly. The combination of the garment closure and the seam attaching the garment closure to the garment, including any protective flap or cover.

3.3.31 Garment Material. The principal chemical-protective material used in the construction of the liquid splash-protective suit.

3.3.32 Glove. See 3.3.42, Liquid Splash-Protective Glove.

3.3.33* Hazardous Materials. A substance (solid, liquid, or gas) that when released is capable of creating harm to people, the environment, and property.

3.3.34 Hazardous Materials Emergencies. Incidents involving the release or potential release of hazardous materials.

3.3.35* Ionizing Radiation. Extremely short-wavelength, high energy penetrating rays of alpha, beta, gamma and x-rays emitted from radioactive elements and isotopes (radionuclides).

3.3.36 Ladder Shank. Reinforcement to the shank area of protective footwear designed to provide additional support to the instep when standing on a ladder rung.

3.3.37* Liquefied Gas. A gas that, under its charged pressure, is partially liquid at 21°C (70°F).

3.3.38* Liquid Splash-Protective Clothing. Multiple items of compliant protective clothing and equipment products that provide protection from some risks, but not all risks, of hazardous materials emergency incident operations involving liquids.

3.3.39* Liquid Splash-Protective Ensemble. Multiple elements of compliant protective clothing and equipment products that when worn together provide protection from some risks, but not all risks, of hazardous materials emergency incident operations involving liquids.

3.3.40* Liquid Splash-Protective Footwear. The element of the protective ensemble, or the item of protective clothing that provides liquid chemical protection and physical protection to the feet, ankles, and lower legs.

3.3.41* Liquid Splash-Protective Garment. The element of the protective ensemble, or the item of protective clothing that provides liquid chemical protection to the upper and lower torso, arms and legs, excluding the head, hands, and feet.

3.3.42 Liquid Splash-Protective Glove. The element of the protective ensemble, or the item of protective clothing that provides liquid chemical protection to the hands and wrists.

3.3.43 Maintenance. Procedures for inspection, repair, and removal from service of liquid splash-protective ensembles or clothing.

3.3.44 Manufacturer. The entity that assumes the liability, provides the warranty for the compliant product, or obtains the product certification.

3.3.45 Model. The collective term used to identify a group of individual liquid splash-protective ensembles or protective clothing of the same basic design and components from a single manufacturer produced by the same manufacturing and quality assurance procedures that are covered by the same certification.

3.3.46 Nonencapsulating. A type of ensemble that provides liquid splash protection, but does not provide vapor- or gas-tight protection, or liquid-tight protection, and does not cover the wearer's respirator.

3.3.47 Outer Boot. A secondary boot worn over footwear item or a bootie that provides physical protection for the chemical-protective material in order for liquid splash-protective footwear to meet certain requirements of this standard.

3.3.48 Outer Garment. A secondary garment worn over another garment that provides physical protection for the chemical-protective material in order for liquid splash-protective garment to meet certain requirements of this standard.

3.3.49 Outer Glove. A secondary glove worn over another glove that provides physical protection for the chemical-protective material in order for the liquid splash-protective glove to meet certain requirements of this standard.

3.3.50* Particulates. Finely divided solid matter that is dispersed in air.

3.3.51 Primary Suit Materials. Liquid splash-protective ensemble and clothing materials limited to the garment material, hood material, visor material, glove material, and footwear material that provide protection from chemical and physical hazards. This includes, in addition to the above materials, the wearer's respiratory protective equipment when designed to be worn outside the liquid splash-protective ensemble, the umbilical air hose, and all other exposed respiratory equipment materials designed to protect the wearer's breathing air and air path. Primary materials can be either single layers or composites.

3.3.52* Product Label. A label or marking affixed by the manufacturer to each compliant product, or product package. Such labels contain compliance statements, certification statements, general information, care, maintenance, or similar data.

3.3.53 Protective Clothing. See definition 3.3.38, Liquid Splash-Protective Clothing.

3.3.54 Protective Ensemble. See 3.3.39, Liquid Splash-Protective Ensemble.

3.3.55 Protective Footwear. See 3.3.40, Liquid Splash-Protective Footwear.

3.3.56 Protective Garment. See 3.3.41, Liquid Splash-Protective Garment.

3.3.57 Protective Gloves. See 3.3.42, Liquid Splash-Protective Glove.

Copyright National Fire Protection Association
Provided by IHS under license with NFPA
No reproduction or networking permitted without license from IHS
Not for Resale

3.3.58 Radionuclide. An isotope form of an element or radioactive element that emits radiation in excess of normal background radiation levels.

3.3.59 Recall System. The action by which a manufacturer identifies an element, provides notice to the users, withdraws an element from the marketplace and distribution sites, and returns the element to the manufacturer or other acceptable location for corrective action.

3.3.60 Respiratory Equipment. A positive pressure, self-contained breathing apparatus (SCBA) or combination SCBA/supplied-air breathing apparatus certified by the National Institute for Occupational Safety and Health (NIOSH) and certified as compliant with NFPA 1981, *Standard on Open-Circuit Self-Contained Breathing Apparatus for Fire and Emergency Services*.

3.3.61 Seam. Any permanent attachment of two or more chemical-protective clothing materials, excluding external fittings, gaskets, and suit closure assemblies, in a line formed by joining the separate material pieces.

3.3.62 Storage Life. The date to remove from service a liquid splash-protective ensemble, element, or clothing item that has undergone proper care and maintenance in accordance with the manufacturer's instructions but has not been used either in training or at actual incidents.

3.3.63 Suit Closure. The component that allows the wearer to enter (don) and exit (doff) the liquid splash-protective ensemble.

3.3.64* Vapor-Protective Ensemble. Multiple elements of compliant protective clothing and equipment products that when worn together provide protection from some risks, but not all risks, of hazardous materials emergency incident operations involving vapors.

3.3.65 Visor Material. The transparent chemical-protective material that allows the wearer to see outside the protective ensemble hood.

Chapter 4 Certification

4.1 General.

4.1.1 The process of certification for protective ensembles and ensemble elements as being compliant with NFPA 1992 shall meet the requirements of Section 4.1, General; Section 4.2, Certification Program; Section 4.3, Inspection and Testing; Section 4.4, Annual Verification of Product Compliance; Section 4.5, Manufacturers' Quality Assurance Program; Section 4.6, Hazards Involving Compliant Product; Section 4.7, Manufacturers' Investigation of Complaints and Returns; and Section 4.8, Manufacturers' Safety Alert and Product Recall Systems.

4.1.2 All compliant ensembles and ensemble elements that are labeled as being compliant with this standard shall meet or exceed all applicable requirements specified in this standard and shall be certified.

4.1.3 All certification shall be performed by a certification organization that meets at least the requirements specified in Section 4.2, Certification Program, and that is accredited for personal protective equipment in accordance with ISO 65, *General requirements for bodies operating product certification systems.* The accreditation shall be issued by an accreditation body operating in accordance with ISO 17011, *General requirements for accreditation bodies accrediting conformity assessment bodies.*

4.1.4* Manufacturers shall not claim compliance with portions or segments of the requirements of this standard and shall not use the NFPA name or the name or identification of this standard, NFPA 1992, in any statements about their respective product(s) unless the product(s) is certified as compliant to this standard.

4.1.5 All compliant protective ensembles and ensemble elements shall be labeled and listed.

4.1.6 All compliant ensembles and ensemble elements shall also have a product label that meets the requirements specified in Section 5.1, Product Label Requirements.

4.1.7* The certification organization's label, symbol, or identifying mark shall be attached to the product label, or shall be part of the product label, or shall be immediately adjacent to the product label.

4.1.8 The certification organization shall not issue any new certifications to the 2000 edition of this standard on or after the NFPA effective date for the 2005 edition, which is 7 February 2005.

4.1.9 The certification organization shall not permit any manufacturer to continue to label any ensembles or ensemble elements that are certified as compliant with the 2000 edition of this standard on or after 1 September 2005.

4.1.10 The certification organization shall require manufacturers to remove all certification labels and product labels indicating compliance with the 2000 edition of this standard from all ensembles and ensemble elements that are under the control of the manufacturer on 1 September 2005, and the certification organization shall verify this action is taken.

4.1.11 Liquid splash-protective ensembles, elements, or liquid splash-protective clothing items shall not be certified for chemical or specific chemical mixtures that have a vapor pressure greater than 5 mm Hg at 25°C (77°F) and have known or suspected human carcinogenicity as indicated by either the *Dangerous Properties of Industrial Chemicals* document or the *NIOSH Pocket Guide to Chemical Hazards* document.

4.1.12 Liquid splash-protective ensembles, or liquid splash-protective clothing items, shall not be certified for chemical or specific chemical mixtures with skin notations as indicated by the American Conference of Governmental Industrial Hygienists, *Threshold Limit Values for Chemical Substances and Physical Agents and Biological Exposure Indices*, and that have a vapor pressure greater than 5 mm Hg at 25°C (77°F).

4.2 Certification Program.

4.2.1* The certification organization shall not be owned or controlled by manufacturers or vendors of the product being certified.

4.2.2 The certification organization shall be primarily engaged in certification work and shall not have a monetary interest in the product's ultimate profitability.

4.2.3 The certification organization shall be accredited for personal protective equipment in accordance with ISO 65, *General requirements for bodies operating product certification systems.* The accreditation shall be issued by an accreditation body operating in accordance with ISO 17011, *General requirements for accreditation bodies accrediting conformity assessment bodies.*

Copyright National Fire Protection Association
Provided by IHS under license with NFPA
No reproduction or networking permitted without license from IHS
Not for Resale

4.2.4 The certification organization shall refuse to certify products to this standard that do not comply with all applicable requirements of this standard.

4.2.5* The contractual provisions between the certification organization and the manufacturer shall specify that certification is contingent on compliance with all applicable requirements of this standard.

4.2.5.1 The certification organization shall not offer or confer any conditional, temporary, or partial certifications.

4.2.5.2 Manufacturers shall not be authorized to use any label or reference to the certification organization on products that are not compliant with all applicable requirements of this standard.

4.2.6* The certification organization shall have laboratory facilities and equipment available for conducting proper tests to determine product compliance.

4.2.6.1 The certification organization laboratory facilities shall have in place a program in place and functioning for calibration of all instruments, and procedures shall be in use to ensure proper control of all testing.

4.2.6.2 The certification organization laboratory facilities shall follow good practice regarding the use of laboratory manuals, form data sheets, documented calibration and calibration routines, performance verification, proficiency testing, and staff qualification and training programs.

4.2.7 The certification organization shall require the manufacturer to establish and maintain a quality assurance program that meets the requirements of Section 4.5, Manufacturers' Safety Alert and Product Recall Systems.

4.2.7.1* The certification organization shall require the manufacturer to have a product recall system specified in Section 4.8, Manufacturers' Safety Alert and Product Recall Systems, as part of the manufacturer's quality assurance program.

4.2.7.2 The certification organization shall audit the manufacturer's quality assurance program to ensure that the quality assurance program provides continued product compliance with this standard.

4.2.8 The certification organization and the manufacturer shall evaluate any changes affecting the form, fit, or function of the compliant product to determine its continued certification to this standard.

4.2.9* The certification organization shall have a follow-up inspection program of the manufacturer's facilities of the compliant product with at least two random and unannounced visits per 12-month period to verify the product's continued compliance.

4.2.9.1 As part of the follow-up inspection program, the certification organization shall select sample compliant product at random from the manufacturer's production line, from the manufacturer's in-house stock, or from the open market.

4.2.9.2 Sample product shall be evaluated by the certification organization to verify the product's continued compliance in order to assure that the materials, components, and manufacturing quality assurance systems are consistent with the materials, components, and manufacturing quality assurance that were inspected and tested by the certification organization during initial certification and recertification.

4.2.9.3 The certification organization shall be permitted to conduct specific testing to verify the product's continued compliance.

4.2.9.4 For products, components, and materials where prior testing, judgment, and experience of the certification organization have shown results to be in jeopardy of not complying with this standard, the certification organization shall conduct more frequent testing of sample product, components, and materials acquired in accordance with 4.2.9.1 against the applicable requirements of this standard.

4.2.10 The certification organization shall have in place a series of procedures, as specified in Section 4.6, Hazards Involving Compliant Product, that address report(s) of situation(s) in which a compliant product is subsequently found to be hazardous.

4.2.11 The certification organization's operating procedures shall provide a mechanism for the manufacturer to appeal decisions. The procedures shall include the presentation of information from both sides of a controversy to a designated appeals panel.

4.2.12 The certification organization shall be in a position to use legal means to protect the integrity of its name and label. The name and label shall be registered and legally defended.

4.3 Inspection and Testing.

4.3.1 For both initial certification and recertification of protective ensembles and ensemble elements, the certification organization shall conduct both inspection and testing as specified in this section.

4.3.2 All inspections, evaluations, conditioning, and testing for certification or for recertification shall be conducted by a certification organization's testing laboratory that is accredited in accordance with the requirements of ISO 17025, *General requirements for the competence of testing and calibration laboratories*.

4.3.2.1 The certification organization's testing laboratory's scope of accreditation to ISO 17025, *General requirements for the competence of testing and calibration laboratories*, shall encompass testing of personal protective equipment.

4.3.2.2 The accreditation of a certification organization's testing laboratory shall be issued by an accreditation body operating in accordance with ISO 17011, *General requirements for accreditation bodies accrediting conformity assessment bodies*.

4.3.3 A certification organization shall be permitted to utilize conditioning and testing results conducted by a product or component manufacturer for certification or recertification provided the manufacturer's testing laboratory meets the requirements specified in 4.3.3.1 through 4.3.3.5.

4.3.3.1 The manufacturer's testing laboratory shall be accredited in accordance with the requirements of ISO 17025, *General requirements for the competence of testing and calibration laboratories*.

4.3.3.2 The manufacturer's testing laboratory's scope of accreditation to ISO 17025, *General requirements for the competence of testing and calibration laboratories*, shall encompass testing of personal protective equipment.

4.3.3.3 The accreditation of a manufacturer's testing laboratory shall be issued by an accreditation body operating in accordance with ISO 17011, *General requirements for accreditation bodies accrediting conformity assessment bodies*.

Copyright National Fire Protection Association
Provided by IHS under license with NFPA
No reproduction or networking permitted without license from IHS
Not for Resale

4.3.3.4 The certification organization shall approve the manufacturer's testing laboratory.

4.3.3.5 The certification organization shall determine the level of supervision and witnessing of the conditioning and testing for certification or recertification conducted at the manufacturer's testing laboratory.

4.3.4 Sampling levels for testing and inspection shall be established by the certification organization and the manufacturer to ensure a reasonable and acceptable reliability at a reasonable and acceptable confidence level that products certified to this standard are compliant, unless such sampling levels are specified herein. This information shall be included in the manufacturer's technical data package.

4.3.5 Inspection by the certification organization shall include a review of all product labels to ensure that all required label attachments, compliance statements, certification statements, and other product information are at least as specified for the ensemble and ensemble elements in Section 5.1, Product Label Requirements.

4.3.6 Inspection by the certification organization shall include an evaluation of any symbols and pictorial graphic representations used on product labels or in user information, as permitted by in 5.1.1.7, to ensure that the symbols are clearly explained in the product's user information package.

4.3.7 Inspection by the certification organization shall include a review of the user information required by Section 5.2, User Information, to ensure that the information has been developed and is available.

4.3.8 Inspection by the certification organization shall include a review of the Technical Data Package to determine compliance with the requirements of Section 5.3, Technical Data Package.

4.3.9 Inspection and evaluation by the certification organization for determining compliance with the design requirements specified in Chapter 6 shall be performed on whole or complete products.

4.3.10 Testing to determine product compliance with the performance requirements specified in Chapter 7 shall be conducted by the certification organization in accordance with the specified testing requirements of Chapter 8.

4.3.10.1 Testing shall be performed on specimens representative of materials and components used in the actual construction of the protective ensemble and ensemble element.

4.3.10.2 The certification organization also shall be permitted to use sample materials cut from a representative product.

4.3.11 The certification organization shall accept from the manufacturer, for evaluation and testing for certification, only product or product components that are the same in every respect to the actual final product or product component.

4.3.12 The certification organization shall not allow any modifications, pretreatment, conditioning, or other such special processes of the product or any product component prior to the product's submission for evaluation and testing by the certification organization.

4.3.13 The certification organization shall not allow the substitution, repair, or modification, other than as specifically permitted herein, of any product or any product component during testing.

4.3.14 The certification organization shall not allow test specimens that have been conditioned and tested for one method to be reconditioned and tested for another test method unless specifically permitted in the test method.

4.3.15 The certification organization shall test ensemble elements with the specific ensemble(s) with which they are to be certified.

4.3.16* Any change in the design, construction, or material of a compliant product shall necessitate new inspection and testing to verify compliance to all applicable requirements of this standard that the certification organization determines can be affected by such change. This recertification shall be conducted before labeling the modified product as being compliant with this standard.

4.3.17 The manufacturer shall maintain all design and performance inspection and test data from the certification organization used in the certification of the manufacturer's compliant product. The manufacturer shall provide such data, upon request, to the purchaser or authority having jurisdiction.

4.4 Annual Verification of Product Compliance.

4.4.1 All elements of the protective ensemble that are labeled as being compliant with this standard shall undergo recertification on an annual basis. This recertification shall include inspection and evaluation to all design requirements and testing to all performance requirements as required by this standard on all manufacturer models and components as specified in 4.4.3.

4.4.1.1 Any change that affects the element's performance under design or performance requirements of this standard shall constitute a different model.

4.4.1.2 For the purpose of this standard, models shall include each unique pattern, style, or design of the element.

4.4.2 Samples of manufacturer's models and components for recertification shall be acquired from the manufacturer or component supplier during random and unannounced visits as part of the follow-up inspection program. For recertification, the certification organization shall acquire at least one liquid splash-protective garment, one pair of liquid splash-protective gloves, one pair of liquid splash-protective footwear, and one complete liquid splash-protective nonencapsulating or encapsulating ensemble outfitted with all manufacturer-provided external fittings. The certification organization shall also acquire a sufficient quantity of component samples to be tested for recertification as required by 4.4.3.

4.4.3 Liquid splash-protective garments, gloves, footwear, ensembles, and components shall be inspected, evaluated, and tested for annual recertification.

4.4.3.1 Each liquid splash-protective garment, glove, footwear, and ensemble shall be inspected and evaluated to each of the design requirements specified in Chapter 6.

4.4.3.2 Each liquid splash-protective ensemble specimen shall be tested for overall performance as specified in Section 7.1 using the following sequence of tests:

(1) The liquid splash-protective ensemble specimen shall then be tested for liquidtight integrity as specified in Section 8.2, Liquidtight Integrity Test 1.

--`,,```,,,,````-`-`,,`,,`,`,,`---

Copyright National Fire Protection Association
Provided by IHS under license with NFPA
No reproduction or networking permitted without license from IHS
Not for Resale

(2) The liquid splash-protective ensemble specimen shall then be tested for overall function and integrity as specified in Section 8.3, Overall Garment Function and Integrity Test.
(3) If certified for optional chemical flash fire protection, the liquid splash-protective ensemble shall then be tested for overall ensemble flash protection as specified in Section 8.19, Overall Ensemble Flash Test.

4.4.3.3 All garment material, visor, glove, footwear, and optional chemical flash fire protection performance requirements shall be evaluated as specified in Chapter 7, with the following modifications:

(1) Penetration resistance testing specified in 7.1.3, 7.1.7.1, 7.1.8.1, 7.2.2, and 7.3.2 shall be performed against the following chemicals:
   (a) Acetone
   (b) 93.1 percent w/w sulfuric acid
(2) A total of two specimens shall be permitted for testing requirements. If the testing is specified for both directions of a material, a total of two specimens per material direction shall be permitted for testing requirements.

4.4.4 The manufacturer shall maintain all design and performance inspection and test data from the certification organization used in the recertification of manufacturer's models and components. The manufacturer shall provide such data, upon request, to the purchaser or the authority having jurisdiction.

4.5 Manufacturers' Quality Assurance Program.

4.5.1 The manufacturer shall provide and operate a quality assurance program that meets the requirements of this section and that includes a product recall system as specified in 4.2.7.1, and Section 4.8, Manufacturers' Safety Alert and Product Recall Systems.

4.5.2 The manufacturer shall be registered to ISO 9001, *Quality management systems – requirements.*

4.5.3 The operation of the quality assurance program shall evaluate and test compliant product production against this standard to assure production remains in compliance.

4.6 Hazards Involving Compliant Product.

4.6.1* The certification organization shall establish procedures to be followed where situation(s) are reported in which a compliant product is subsequently found to be hazardous. These procedures shall comply with the provisions of ISO 27, *Guidelines for corrective action to be taken by a certification body in the event of misuse of its mark of conformity*, and as modified herein.

4.6.2* Where a report of a hazard involved with a compliant product is received by the certification organization, the validity of the report shall be investigated.

4.6.3 With respect to a compliant product, a hazard shall be a condition or create a situation that results in exposing life, limb, or property to an imminently dangerous or dangerous condition.

4.6.4 Where a specific hazard is identified, the determination of the appropriate action for the certification organization and the manufacturer to undertake shall take into consideration the severity of the hazard and its consequences to the safety and health of users.

4.6.5 Where it is established that a hazard is involved with a compliant product, the certification organization shall determine the scope of the hazard including products, model numbers, serial numbers, factory production facilities, production runs, and quantities involved.

4.6.6 The certification organization's investigation shall include, but not be limited to, the extent and scope of the problem as it might apply to other compliant product or compliant product components manufactured by other manufacturers or certified by other certification organizations.

4.6.7 The certification organization shall also investigate reports of a hazard where compliant product is gaining widespread use in applications not foreseen when the standard was written, such applications in turn being ones for which the product was not certified, and no specific scope of application has been provided in the standard, and no limiting scope of application was provided by the manufacturer in written material accompanying the compliant product at the point of sale.

4.6.8 The certification organization shall require the manufacturer of the compliant product, or the manufacturer of the compliant product component if applicable, to assist the certification organization in the investigation and to conduct its own investigation as specified in Section 4.7, Manufacturers' Investigation of Complaints and Returns.

4.6.9 Where the facts indicating a need for corrective action are conclusive and the certification organization's appeal procedures referenced in 4.2.11 have been followed, the certification organization shall initiate corrective action immediately, provided there is a manufacturer to be held responsible for such action.

4.6.10 Where the facts are conclusive and corrective action is indicated but there is no manufacturer to be held responsible, such as when the manufacturer is out of business or the manufacturer is bankrupt, the certification organization shall immediately notify relevant governmental and regulatory agencies and issue a notice to the user community about the hazard.

4.6.11* Where the facts are conclusive and corrective action is indicated, the certification organization shall take one or more of the following corrective actions:

(1) Notification of parties authorized and responsible for issuing a safety alert when, in the opinion of the certification organization, such a notification is necessary to inform the users
(2) Notification of parties authorized and responsible for issuing a product recall when, in the opinion of the certification organization, such a recall is necessary to protect the users
(3) Removing the mark of certification from the product
(4) Where a hazardous condition exists and it is not practical to implement (1), (2), or (3), or the responsible parties refuse to take corrective action, the certification organization shall notify relevant governmental and regulatory agencies and issue a notice to the user community about the hazard

4.6.12 The certification organization shall provide a report to the organization or individual identifying the reported hazardous condition and notify them of the corrective action indicated, or that no corrective action is indicated.

4.6.13* Where a change to an NFPA standard(s) is felt to be necessary, the certification organization shall also provide a copy of the report and corrective actions indicated to the NFPA, and shall also submit either a public proposal for a

Copyright National Fire Protection Association
Provided by IHS under license with NFPA
No reproduction or networking permitted without license from IHS
Not for Resale

proposed change to the next revision of the applicable standard, or a proposed Temporary Interim Amendment (TIA) to the current edition of the applicable standard.

4.7 Manufacturers' Investigation of Complaints and Returns.

4.7.1 Manufacturers shall provide corrective action in accordance with ISO 9001, *Quality management systems — requirements*, for investigating written complaints and returned products.

4.7.2 Manufacturers' records of returns and complaints related to safety issues shall be retained for at least 5 years.

4.7.3 Where the manufacturer discovers, during the review of specific returns or complaints, that a compliant product or compliant product component can constitute a potential safety risk to end users that is possibly subject to a safety alert or product recall, the manufacturer shall immediately contact the certification organization and provide all information about their review to assist the certification organization with their investigation.

4.8 Manufacturers' Safety Alert and Product Recall Systems.

4.8.1 Manufacturers shall establish a written safety alert system and a written product recall system that describes the procedures to be used in the event that it decides, or is directed by the certification organization, to either issue a safety alert or to conduct a product recall.

4.8.2 The manufacturers' safety alert and product recall system shall provide the following:

(1) The establishment of a coordinator and responsibilities by the manufacturer for the handling of safety alerts and product recalls
(2) A method of notifying all dealers, distributors, purchasers, users, and the NFPA about the safety alert or product recall that can be initiated within a 1-week period following the manufacturer's decision to issue a safety alert or to conduct a product recall, or after the manufacturer has been directed by the certification organization to issue a safety alert or conduct a product recall
(3) Techniques for communicating accurately and understandably the nature of the safety alert or product recall and in particular the specific hazard or safety issue found to exist
(4) Procedures for removing product that is recalled and for documenting the effectiveness of the product recall
(5) A plan for either repairing or replacing the product or compensating purchasers for a returned product

Chapter 5 Labeling and Information

5.1 Product Label Requirements.

5.1.1 General.

5.1.1.1* Each liquid splash-protective garment element and item shall have a product label permanently and conspicuously attached to or printed on each garment when the garment is properly assembled with all layers, components, and component parts in place.

5.1.1.2 Each liquid splash-protective glove element and item shall have a product label permanently and conspicuously attached to or printed on the top outside of the gauntlet of each glove piece when the glove is properly assembled with all layers, components, and component parts in place. In addition, each package containing one or more pairs of liquid splash-protective gloves shall have a product label attached to, printed on, or inserted in the glove package.

5.1.1.3 All liquid splash-protective footwear elements and items shall have a product label permanently and conspicuously attached to or printed on the inside of each footwear piece when the footwear is properly assembled with all layers, components, and component parts in place. In addition, each package containing one or more pairs of liquid splash-protective footwear shall have a product label attached to, printed on, or inserted in the footwear package.

5.1.1.4 Each liquid splash-protective ensemble shall have a product label permanently and conspicuously attached to or printed on the inside of each ensemble when the ensemble is properly assembled with all layers, components, and component parts in place.

5.1.1.5* Multiple label pieces shall be permitted in order to carry all statements and information required to be on the product label; however, all label pieces comprising the entire product label shall be located adjacent to each other.

5.1.1.6 All worded portions of the required product label shall be at least in English.

5.1.1.7 Symbols and other pictorial graphic representations shall be permitted to be used to supplement worded statements on the product label(s) where such symbols and other pictorial graphic representations are clearly explained in the user information.

5.1.1.8 The certification organization's label, symbol, or identifying mark shall be legibly printed on the product label. All letters shall be at least 2.5 mm (3⁄32 in.) high.

5.1.1.9 The compliance statements and information specified in 5.1.2 through 5.1.6, as applicable for the specific protective ensemble, element, or protective clothing item, shall be legibly printed on the product label. All letters shall be at least 3 mm (1⁄8 in.) high.

5.1.1.10 In addition to the compliance statements specified in 5.1.1.9, at least the following information shall also be printed legibly on the product label(s), and all letters shall be at least 2 mm (1⁄16 in.) high:

(1) Manufacturer's name, identification, or designation
(2) Manufacturer's address
(3) Country of manufacture
(4) Model, style, or serial number
(5) Size
(6) Garment, glove, footwear, ensemble material(s), as applicable
(7) Visor material(s) if provided
(8) Glove component for ensemble
(9) Footwear component for ensemble

5.1.1.11 Where detachable components, including, but not limited to, outer garments, outer gloves, or outer boots, must be worn with a liquid splash-protective ensemble or protective clothing item in order for the ensemble or clothing item to be compliant with this standard, at least the following statement and information shall also be printed legibly on the product label. All letters shall be at least 2.5 mm (3⁄32 in.) high. The appropriate term of "garment," "glove," "footwear," or "ensemble" shall be inserted where indicated in the label text. The detachable component(s) shall be listed following this statement by type, identification, and how properly worn.

--`,,```,,,,````-`-`,,`,,`,`,,`---
Copyright National Fire Protection Association
Provided by IHS under license with NFPA
No reproduction or networking permitted without license from IHS
Not for Resale

"FOR COMPLIANCE WITH NFPA 1992, THE FOLLOWING ADDITIONAL COMPONENTS MUST BE WORN IN CONJUNCTION WITH THIS LIQUID SPLASH-PROTECTIVE (insert the term "GARMENT," "GLOVE," "FOOTWEAR," or "ENSEMBLE" here): (List detachable components here.)"

5.1.1.12 Detachable components specified in 5.1.1.11 shall meet the label requirements specified in ASTM F 1301, *Standard Practice for Labeling Chemical Protective Clothing*. The label shall also meet the requirements of 5.1.1.1 through 5.1.1.8.

5.1.2 Garment Element and Item Compliance Statements.

5.1.2.1 Each liquid splash-protective garment shall have at least the following compliance statements and information on the product label:

"THIS LIQUID SPLASH-PROTECTIVE GARMENT MEETS THE BASIC REQUIREMENTS OF NFPA 1992, STANDARD ON LIQUID SPLASH-PROTECTIVE ENSEMBLES AND CLOTHING FOR HAZARDOUS MATERIALS EMERGENCIES, 2005 EDITION, AND FOR THE ADDITIONAL REQUIREMENT IF INDICATED BELOW.

ADDITIONAL REQUIREMENT	YES	NO
***LIMITED* CHEMICAL FLASH FIRE PROTECTION FOR *ESCAPE ONLY* IN THE EVENT OF A CHEMICAL FLASH FIRE**		

THE TECHNICAL DATA PACKAGE CONTAINS INFORMATION ON CHEMICALS AND SPECIFIC CHEMICAL MIXTURES FOR WHICH THIS GARMENT IS CERTIFIED. CONSULT THE TECHNICAL DATA PACKAGE AND MANUFACTURER'S INSTRUCTIONS BEFORE USE. DO NOT REMOVE THIS LABEL."

5.1.2.2 Where the garment does provide the optional limited chemical flash fire protection above the basic requirements of this standard, the YES box shall be marked. Where the garment does not provide the optional limited chemical flash fire protection above the basic requirements of this standard, the NO box shall be marked.

5.1.3 Glove Element and Item Compliance Statements.

5.1.3.1 Each liquid splash-protective glove shall have at least the following compliance statements and information on the product label:

"THIS LIQUID SPLASH-PROTECTIVE GLOVE MEETS THE BASIC REQUIREMENTS OF NFPA 1992, STANDARD ON LIQUID SPLASH-PROTECTIVE ENSEMBLES AND CLOTHING FOR HAZARDOUS MATERIALS EMERGENCIES, 2005 EDITION, AND FOR THE ADDITIONAL REQUIREMENT IF INDICATED BELOW.

ADDITIONAL REQUIREMENT	YES	NO
***LIMITED* CHEMICAL FLASH FIRE PROTECTION FOR *ESCAPE ONLY* IN THE EVENT OF A CHEMICAL FLASH FIRE**		

THE TECHNICAL DATA PACKAGE CONTAINS INFORMATION ON CHEMICALS AND SPECIFIC CHEMICAL MIXTURES FOR WHICH THIS GLOVE IS CERTIFIED. CONSULT THE TECHNICAL DATA PACKAGE AND MANUFACTURER'S INSTRUCTIONS BEFORE USE. DO NOT REMOVE THIS LABEL."

5.1.3.2 Where the glove does provide the optional limited chemical flash fire protection above the basic requirements of this standard, the YES box shall be marked. Where the glove does not provide the optional limited chemical flash fire protection above the basic requirements of this standard, the NO box shall be marked.

5.1.3.3 Each liquid splash-protective glove shall be permitted to have the labeling information specified in 5.1.3.1 and 5.1.3.2 placed on the package label, and the statement in either 5.1.3.3.1 or 5.1.3.3.2, as applicable, shall be directly printed, embossed, or attached to each glove in lettering at least 2.5 mm (3⁄32 in.) high.

5.1.3.3.1 Where the glove is not compliant with the optional limited chemical flash fire protection above the basic requirements of this standard, the following statement shall be used:

"MEETS NFPA 1992 (2005 ed.)"

5.1.3.3.2 Where the glove is compliant with the optional limited chemical flash fire protection above the basic requirements of this standard, the following statement shall be used:

"MEETS NFPA 1992 (2005 ed.), FLASH FIRE ESCAPE PROTECTION"

5.1.4 Footwear Element and Item Compliance Statements.

5.1.4.1 Each liquid splash-protective footwear piece shall have at least the following compliance statements and information on the product label:

"THIS LIQUID SPLASH-PROTECTIVE FOOTWEAR MEETS THE BASIC REQUIREMENTS OF NFPA 1992, STANDARD ON LIQUID SPLASH-PROTECTIVE ENSEMBLES AND CLOTHING FOR HAZARDOUS MATERIALS EMERGENCIES, 2005 EDITION, AND FOR THE ADDITIONAL REQUIREMENT IF INDICATED BELOW.

ADDITIONAL REQUIREMENT	YES	NO
***LIMITED* CHEMICAL FLASH FIRE PROTECTION FOR *ESCAPE ONLY* IN THE EVENT OF A CHEMICAL FLASH FIRE**		

THE TECHNICAL DATA PACKAGE CONTAINS INFORMATION ON CHEMICALS AND SPECIFIC CHEMICAL MIXTURES FOR WHICH THIS FOOTWEAR IS CERTIFIED. CONSULT TECHNICAL DATA PACKAGE AND MANUFACTURER'S INSTRUCTIONS BEFORE USE. DO NOT REMOVE THIS LABEL."

Copyright National Fire Protection Association
Provided by IHS under license with NFPA
No reproduction or networking permitted without license from IHS
Not for Resale

5.1.4.2 Where the footwear does provide the optional limited chemical flash fire protection above the basic requirements of this standard, the YES box shall be marked. Where the footwear does not provide the optional limited chemical flash fire protection above the basic requirements of this standard, the NO box shall be marked.

5.1.5 Nonencapsulating Ensemble Compliance Statements.

5.1.5.1 Each nonencapsulating liquid splash-protective ensemble shall have at least the following compliance statements and information on the product label:

"THIS NONENCAPSULATING LIQUID SPLASH-PROTECTIVE ENSEMBLE MEETS THE BASIC REQUIREMENTS OF NFPA 1992, STANDARD ON LIQUID SPLASH-PROTECTIVE ENSEMBLES AND CLOTHING FOR HAZARDOUS MATERIALS EMERGENCIES, 2005 EDITION, AND FOR THE ADDITIONAL REQUIREMENT IF INDICATED BELOW.

ADDITIONAL REQUIREMENT	YES	NO
***LIMITED* CHEMICAL FLASH FIRE PROTECTION FOR *ESCAPE ONLY* IN THE EVENT OF A CHEMICAL FLASH FIRE**		

THE TECHNICAL DATA PACKAGE CONTAINS INFORMATION ON CHEMICALS AND SPECIFIC CHEMICAL MIXTURES FOR WHICH THIS NONENCAPSULATING ENSEMBLE IS CERTIFIED. CONSULT THE TECHNICAL DATA PACKAGE AND MANUFACTURER'S INSTRUCTIONS BEFORE USE. DO NOT REMOVE THIS LABEL."

5.1.5.2 Where the nonencapsulating ensemble does provide the optional limited chemical flash fire protection above the basic requirements of this standard, the YES box shall be marked. Where the nonencapsulating ensemble does not provide the optional limited chemical flash fire protection above the basic requirements of this standard, the NO box shall be marked.

5.1.6 Encapsulating Ensemble Compliance Statements.

5.1.6.1 Each encapsulating liquid splash-protective ensemble shall have at least the following compliance statements and information on the product label:

"THIS ENCAPSULATING LIQUID SPLASH-PROTECTIVE ENSEMBLE MEETS THE BASIC REQUIREMENTS OF NFPA 1992, STANDARD ON LIQUID SPLASH-PROTECTIVE ENSEMBLES AND CLOTHING FOR HAZARDOUS MATERIALS EMERGENCIES, 2005 EDITION, AND FOR THE ADDITIONAL REQUIREMENT IF INDICATED BELOW.

ADDITIONAL REQUIREMENT	YES	NO
***LIMITED* CHEMICAL FLASH FIRE PROTECTION FOR *ESCAPE ONLY* IN THE EVENT OF A CHEMICAL FLASH FIRE**		

THE TECHNICAL DATA PACKAGE CONTAINS INFORMATION ON CHEMICALS AND SPECIFIC CHEMICAL MIXTURES FOR WHICH THIS ENCAPSULATING ENSEMBLE IS CERTIFIED. CONSULT THE TECHNICAL DATA PACKAGE AND MANUFACTURER'S INSTRUCTIONS BEFORE USE. DO NOT REMOVE THIS LABEL."

5.1.6.2 Where the encapsulating ensemble does provide the optional limited chemical flash fire protection above the basic requirements of this standard, the YES box shall be marked. Where the encapsulating ensemble does not provide the optional limited chemical flash fire protection above the basic requirements of this standard, the NO box shall be marked.

5.2* User Information.

5.2.1 The manufacturer shall provide user information including, but not limited to, warnings, information, and instructions with each individual protective clothing item or each ensemble.

5.2.2 The manufacturer shall attach the required user information, or packaging containing the user information, to the protective clothing item or element in such a manner that it is not possible to use the clothing item or element without being aware of the availability of the information.

5.2.3 The manufacturer shall provide at least the following instructions and information with each liquid splash-protective clothing item or ensemble:

(1) Pre-use information:
  (a) Safety considerations
  (b) Limitations of use
  (c) Clothing or element marking recommendations and restrictions
  (d) A statement that most performance properties of the liquid splash-protective clothing item or ensemble cannot be tested by the user in the field
  (e) Closure lubricants, if applicable
  (f) Visor antifog agents or procedures
  (g) Recommended undergarments
  (h) Shelf life
  (i) Warranty information
(2) Preparation for use:
  (a) Sizing/adjustment
  (b) Recommended storage practices
(3) Inspection frequency and details
(4) Don/doff:
  (a) Donning and doffing procedures
  (b) Sizing and adjustment procedures
  (c) Interface issues
(5) Proper use consistent with NFPA 1500, *Standard on Fire Department Occupational Safety and Health Program*, and 29 CFR 1910.132
(6) Maintenance and cleaning:
  (a) Cleaning instructions and precautions with a statement advising users not to use ensembles, elements, or clothing items that are not thoroughly cleaned and dried
  (b) Inspection details
  (c) Maintenance criteria and methods of repair where applicable
  (d) Decontamination procedures for both chemical and biological contamination
(7) Retirement and disposal criteria and consideration

Copyright National Fire Protection Association
Provided by IHS under license with NFPA
No reproduction or networking permitted without license from IHS
Not for Resale

5.2.4 The manufacturer shall state the storage life for each liquid splash-protective ensemble, element, or clothing item.

5.3 Technical Data Package.

5.3.1* The manufacturer shall furnish a technical data package for the protective ensemble, element, or clothing item upon the request of the purchaser.

5.3.2* The technical data package shall contain all documentation required by this standard and the data showing compliance with this standard.

5.3.3 In the technical data package, the manufacturer shall describe the clothing item, element, or ensemble in terms of manufacturer trade name and model number, manufacturer replaceable components, and available options.

5.3.4* Descriptions of sizes shall include the range in height and weight for persons fitting each particular size, for garments, or sizes specific in Chapter 6, Design Requirements, for gloves and footwear, and shall provide information to the wearer as to whether these sizes apply to persons wearing SCBA, hardhats, communications devices, fire fighting protective clothing, and other similar gear.

5.3.5 Garment Material and Component Descriptions.

5.3.5.1 When specific clothing items or equipment are required for certifying the ensemble, element, or clothing item to this standard, the manufacturer shall list these clothing items or equipment in the technical data package.

5.3.5.2 The manufacturer shall provide, in the technical data package, the list and descriptions of the following ensemble materials and components, if applicable:

(1) Garment material
(2) Visor material
(3) Glove material and type of attachment
(4) Footwear material and type of attachment
(5) Zipper/closure type and materials
(6) Material seam types and composition
(7) Exhaust valve types and material(s)
(8) External fitting types and material(s)
(9) External gasket types and material(s)
(10) Outer garment, glove, or boot material(s)
(11) Type or style of head protection accommodated within the suit

5.3.5.3 All descriptions of material composition shall specify either the generic material names or trade names if the composition of the material is proprietary.

5.3.5.4 Descriptions of respective suit materials and components shall include the following information, if applicable:

(1) Visor material: The availability of any permanent detachable covers and films
(2) Gloves:
  (a) Type of linings or surface treatments
  (b) Available glove sizes
(3) Footwear:
  (a) Type of linings or surface treatments
  (b) Type of soles or special toe reinforcements
  (c) Available footwear sizes
(4) Garment zipper or closure:
  (a) The material(s) of construction for the closure (including chain, slide, pull, and tape for zippers)
  (b) The location and the length of the completed closure assembly
  (c) A description of any protective covers for flaps
(5) Other clothing items (e.g., outer garments): Type and how used with protective suit

5.3.5.5 The manufacturer shall describe, in the technical data package, the type of seams or methods of attachment for the following garment material and component combinations:

(1) Garment material–garment material
(2) Garment material–visor
(3) Garment material–glove
(4) Garment material–footwear
(5) Garment material–garment closure
(6) Outer cover–outer cover

Chapter 6 Design Requirements

6.1 Protective Garment Elements and Items Design Requirements.

6.1.1 Liquid splash-protective garments shall be designed and configured to protect the wearer's torso, arms, and legs.

6.1.2 Where used, booties shall be designed as an extension of the garment leg and shall cover the entire foot and ankle.

6.1.3 Liquid splash-protective garments shall be offered in at least four unique and different sizes.

6.1.4 All external fittings shall be free of rough spots, burrs, or sharp edges that could tear primary materials.

6.2 Protective Glove Elements and Items Design Requirements.

6.2.1 Liquid splash-protective gloves shall be designed and configured to protect the wearer's hands and wrist.

6.2.2 Liquid splash gloves shall be designed and configured to protect the wearer's hands and wrists.

6.2.3 Gloves shall provide protection from the finger tips to at least 25 mm (1 in.) beyond the wrist crease.

6.2.4 In order to label or otherwise represent a glove that meets the requirements of this standard, the manufacturer shall provide gloves in not less than five separate and distinct sizes. The glove size on the product label shall be determined as specified in Table 6.2.4.

Table 6.2.4 Glove Sizing

	To Fit Hand Circumference	
Labeled Size	**mm**	**in.**
S	200–230	8–9
M	230–255	9–10
L	255–280	10–11
XL	280–305	11–12
XXL	305–330	12–13

Copyright National Fire Protection Association
Provided by IHS under license with NFPA
No reproduction or networking permitted without license from IHS
Not for Resale

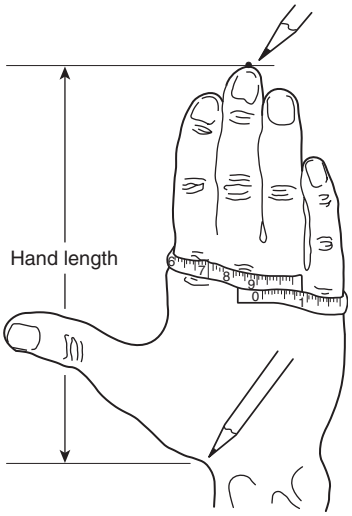

FIGURE 6.2.4.1 Method of Measuring Hand Dimensions for Selection of Proper Glove Sizes.

6.2.4.1 Hand dimensions for selection of proper glove size shall consist of taking two dimensions as shown in Figure 6.2.4.1 — the hand circumference and the length of the right hand.

6.2.4.2 Hand circumference shall be measured by placing the measuring tape on a table or other flat surface with the numerals facing downward. The subject shall place the right hand, palm down and fingers together, in the middle of the tape so that the tape can pass straight across the hand just beneath the knuckles (metacarpal). The circumference shall be measured to the nearest eighth of an inch, as shown in Figure 6.2.4.1.

6.2.5 Where ensemble gloves are designed for removal, the glove to liquid splash-protective garment sleeve interface shall be designed to permit removal and replacement of the gloves attached to each sleeve within a 30-minute period.

6.2.6 All external hardware and fittings shall be free of rough spots, burrs, or sharp edges that could tear materials.

6.3 Protective Footwear Elements and Items Design Requirements.

6.3.1 Protective footwear shall be designed and configured to provide protection to the feet. ankles, and lower leg.

6.3.2 Footwear shall provide protection not less than 200 mm (8 in.) in height when measured from the plane of the sole bottom.

6.3.3 Protective footwear shall be constructed using primary material that shall provide the protection from chemical and physical hazards.

6.3.3.1 The primary material shall include the chemical-protective layer that can be configured as a separate layer or as a composite.

6.3.3.2 The chemical-protective layer shall be designed to provide penetration resistance to liquid chemical splash.

6.3.3.3 The chemical-protective layer shall be considered as primary material and shall be permitted to be configured as a separate layer or as a composite with other primary materials.

6.3.3.4 The chemical-protective layer shall be permitted to depend on the other primary material to provide the physical protection.

6.3.4 Protective footwear shall be permitted to be constructed using an outer boot designed to be worn over the primary footwear or bootie where such additional boots are necessary to meet the footwear requirements of this standard.

6.3.5 Booties, where provided, shall be designed as an extension of the chemical protective suit leg, shall cover the entire foot and ankle, and shall provide protection to the feet when worn in conjunction with an outer boot.

6.3.6 Heel breast shall not be less than 13 mm (½ in.).

6.3.7 Protective footwear shall be offered in at least six unique and different sizes.

6.3.8 All external hardware and fittings shall be free of rough spots, burrs, or sharp edges that could tear materials.

6.3.9 Metal parts shall not penetrate from the outside into the lining or insole at any point.

6.3.10 No metal parts, including but not limited to nails or screws, shall be present or utilized in the construction or attachment of the sole (with heel) to the puncture-resistant device, insole, or upper.

6.4 Nonencapsulating Ensemble Design Requirements.

6.4.1 Nonencapsulating protective ensembles shall be designed and configured to protect the wearer's torso, head, arms, legs, hands, and feet and shall completely enclose the wearer but shall not completely enclose the wearer's respiratory protective equipment.

6.4.2 Garment elements of nonencapsulating ensembles shall meet the design requirements specified in Section 6.1, Protective Garment Elements and Items Design Requirements.

6.4.3 Glove elements of nonencapsulating ensembles shall meet the design requirements specified in Section 6.2, Protective Glove Elements and Items Design Requirements.

6.4.3.1 Where inner gloves are used as part of the nonencapsulating protective ensemble, the manufacturer shall specify types of compliant outer gloves that provide the performance requirements for gloves specified in 7.2.3, 7.2.4, and 7.2.5.

6.4.4 Footwear elements of nonencapsulating ensembles shall meet the design requirements specified in Section 6.3, Protective Footwear Elements and Items Design Requirements.

6.4.4.1 Where booties are used as part of a nonencapsulating protective ensemble, the manufacturer shall specify types of compliant outer footwear that provide the performance requirements for footwear specified in 7.3.3 through 7.3.9.

6.5 Encapsulating Ensemble Design Requirements.

6.5.1 Encapsulating protective ensembles shall be designed and configured to protect the wearer's torso, head, arms, legs, hands, feet, and respiratory equipment and shall completely enclose the wearer and the wearer's respiratory equipment.

6.5.2 Garment elements of encapsulating ensembles shall meet the design requirements specified in Section 6.1, Protective Garment Elements and Items Design Requirements.

6.5.3 Encapsulating ensembles shall include an integral hood with visor and shall include attached gloves and attached footwear.

Copyright National Fire Protection Association
Provided by IHS under license with NFPA
No reproduction or networking permitted without license from IHS
Not for Resale

6.5.4 Glove elements of encapsulating ensembles shall meet the design requirements specified in Section 6.2, Protective Glove Elements and Items Design Requirements.

6.5.4.1 Attached gloves shall be permitted to be inner gloves.

6.5.4.2 Where inner gloves are used as part of the encapsulating protective ensemble, the manufacturer shall specify types of compliant outer gloves that provide the performance requirements for gloves specified in 7.2.3, 7.2.4, and 7.2.5.

6.5.5 Footwear elements of encapsulating ensembles shall meet the design requirements specified in Section 6.3, Protective Footwear Elements and Items Design Requirements.

6.5.5.1 Attached footwear shall be permitted to be booties.

6.5.5.2 Where booties are provided in the construction of the encapsulating ensemble, the manufacturer shall specify types of compliant outer footwear that provide the performance requirements for footwear specified in 7.3.3 through 7.3.9.

6.6 Optional Chemical Flash Fire Protection Design Requirements. Where liquid splash-protective ensembles or elements rely on external clothing items or multiple layers to meet the performance requirements in Section 7.6, Optional Chemical Flash Fire Protection Performance Requirements, the ensemble or elements shall be designed so that all layers or separate parts are securely attached and provided as a single and integrated unit.

Chapter 7 Performance Requirements

7.1 Protective Garment Elements and Items Performance Requirements.

7.1.1 Garments shall be tested for liquidtight integrity as specified in Section 8.2, Liquidtight Integrity Test 1, and shall allow no liquid penetration.

7.1.2 Garments shall be tested for overall function and integrity as specified in Section 8.3, Overall Garment Function and Integrity Test, and shall allow the test subject to complete all tasks within 15 minutes, and shall allow no liquid penetration in subsequent liquidtight integrity testing as specified in Section 8.2, Liquidtight Integrity Test 1, and the garment closure shall remain engaged during the entire garment function testing.

7.1.2.1 Where hoods are provided, garments shall accommodate head protection devices meeting the dimensional requirements for Type I, Class G helmets of ANSI Z89.1, *Standard for Industrial Head Protection.*

7.1.2.2 Where hoods with visors are provided, garments shall permit the test subject to see with a visual acuity of 20/35 or better through the combination of both the hood visor and the respirator facepiece lens.

7.1.2.3 Where a protective flap is used over the closure system, it shall remain closed for the duration of the overall garment function test.

7.1.3 Garment materials shall be tested for penetration resistance after flexing and abrasion as specified in Section 8.4, Chemical Penetration Resistance Test, and shall exhibit no penetration for at least 1 hour for the following list of chemicals, and shall exhibit no penetration for at least 1 hour for each additional chemical or specific chemical mixture for which the manufacturer is certifying the garment:

(1) Acetone
(2) Ethyl acetate
(3) 50 percent w/w sodium hydroxide
(4) 93.1 percent w/w sulfuric acid
(5) Tetrahydrofuran

7.1.4 Garment materials shall be tested for bursting strength as specified in Section 8.5, Burst Strength Test, and shall have a bursting strength of not less than 135 N (30 lbf).

7.1.5 Garment materials shall be tested for puncture propagation tear resistance as specified in Section 8.6, Puncture Propagation Tear Resistance Test, and shall have a puncture propagation tear resistance of not less than 25 N (5.6 lbf).

7.1.6 Garment materials shall be tested for cold weather performance as specified in Section 8.7, Cold Temperature Performance Test 1, and shall have a bending moment of not greater than 0.68 N × m (0.50 lb × in.) at an angular deflection of 60 degrees and –25°C (–13°F).

7.1.7 Garment Visor Requirements.

7.1.7.1 Where provided, visor materials shall be tested for penetration resistance as specified in Section 8.4, Chemical Penetration Resistance Test, and shall exhibit no penetration for at least 1 hour for each of the NFPA battery of chemicals and for each additional chemical or specific chemical mixture for which the manufacturer is certifying the garment.

7.1.7.2 Where provided, visor materials shall be tested for bursting strength as specified in Section 8.5, Burst Strength Test, and shall have bursting strength of not less than 135 N (30 lbf).

7.1.7.3 Where provided, visor materials shall be tested for puncture propagation tear resistance as specified in Section 8.6, Puncture Propagation Tear Resistance Test, and shall have a puncture propagation tear resistance of not less than 25 N (5½ lbf).

7.1.7.4 Visor materials shall be tested for cold temperature bending as specified in Section 8.9, Cold Temperature Performance Test 2, and shall not crack or show evidence of visible damage.

7.1.8 Garment Seam Requirements.

7.1.8.1 Garment seams, and visor seams where visors are provided, shall be tested for penetration resistance as specified in Section 8.4, Chemical Penetration Resistance Test, and shall exhibit no penetration for at least 1 hour for 100 percent isopropanol and 93.1 percent w/w sulfuric acid.

7.1.8.2 Garment seams, and visor seams where visors are provided, shall be tested for seam strength as specified in Section 8.8, Seam/Closure Breaking Strength Test, and shall have a breaking strength of not less than 67 N/50 mm (15 lbf/2 in.).

7.1.9 Garment Closure Assembly Requirements.

7.1.9.1 Where garment closures are not fully covered by a protective flap that is constructed of the same material as the garment, garment closure assemblies shall be tested for penetration resistance as specified in Section 8.4, Chemical Penetration Resistance Test, and shall exhibit no penetration for at least 1 hour for 100 percent isopropanol and 93.1 percent w/w sulfuric acid.

7.1.9.2 Garment closure assemblies shall be tested for closure strength as specified in Section 8.8, Seam/Closure Breaking Strength Test, and shall have a breaking strength of not less than 67 N/50 mm (15 lbf/2 in.).

Copyright National Fire Protection Association
Provided by IHS under license with NFPA
No reproduction or networking permitted without license from IHS
Not for Resale

7.2 Protective Glove Elements and Items Performance Requirements.

7.2.1 Gloves shall be tested for liquidtight integrity as specified in Section 8.10, Liquidtight Integrity Test 2, and shall show no leakage.

7.2.2 Glove materials shall be tested for penetration resistance after flexing and abrading as specified in Section 8.4, Chemical Penetration Resistance Test, and shall exhibit no penetration for at least 1 hour for the following list of chemicals, and shall exhibit no penetration for at least 1 hour for each additional chemical or specific chemical mixture for which the manufacturer is certifying the glove:

(1) Acetone
(2) Ethyl acetate
(3) 50 percent w/w sodium hydroxide
(4) 93.1 percent w/w sulfuric acid
(5) Tetrahydrofuran

7.2.3 Glove materials shall be tested for cut resistance as specified in Section 8.11, Cut Resistance Test, and shall have a blade travel distance of not less than 25 mm (1 in.).

7.2.4 Glove materials shall be tested for puncture resistance as specified in Section 8.12, Puncture Resistance Test 1, and shall have a puncture resistance of not less than 11 N (2.5 lbf).

7.2.5 Glove materials shall be tested for cold weather performance as specified in Section 8.7, Cold Temperature Performance Test 1, and shall have a bending moment of 0.68 N × m (0.50 lb × in.) at an angular deflection of 60 degrees and –25°C (–13°F).

7.2.6 Glove specimens shall be tested for hand function as specified in Section 8.13, Gloved Hand Dexterity Test, and shall have an average percent increase over barehanded control less than 200 percent.

7.2.7 Glove seams shall be tested for penetration resistance as specified in Section 8.4, Chemical Penetration Resistance Test, and shall exhibit no penetration for at least 1 hour for 100 percent isopropanol and 93.1 percent w/w acid.

7.3 Protective Footwear Elements and Items Performance Requirements.

7.3.1 Footwear shall be tested for liquidtight integrity as specified in Section 8.10, Liquidtight Integrity Test 2, and shall show no leakage.

7.3.2 Footwear upper materials shall be tested for penetration resistance after flexing and abrading as specified in Section 8.4, Chemical Penetration Resistance Test, and shall exhibit no penetration for at least 1 hour for the following list of chemicals, and shall exhibit no penetration for at least 1 hour for each additional chemical or specific chemical mixture for which the manufacturer is certifying the footwear:

(1) Acetone
(2) Ethyl acetate
(3) 50 percent w/w sodium hydroxide
(4) 93.1 percent w/w sulfuric acid
(5) Tetrahydrofuran

7.3.3 Footwear upper materials shall be tested for cut resistance as specified in Section 8.11, Cut Resistance Test, and shall have a blade travel distance of not less than 25 mm (1 in.).

7.3.4 Footwear upper materials shall be tested for puncture resistance as specified in Section 8.12, Puncture Resistance Test 1, and have a puncture resistance of not less than 36 N (8 lbf).

7.3.5 Sample footwear toes shall be tested for impact and compression resistance as specified in Section 8.16, Impact and Compression Test, and shall have an impact resistance of not less than 101.7 J (75 ft-lb) and a compression resistance of not less than 11,121 N (2500 lbf).

7.3.6 Footwear shall be tested for resistance to puncture as specified in Section 8.14, Puncture Resistance Test 2, and shall not allow puncture through the sole area and the heel area at a force load of less than 1210 N (272 lbf).

7.3.7 Footwear sole and heels shall be tested for abrasion resistance as specified in Section 8.15, Abrasion Resistance Test, and have an abrasion-resistance rating of not less than 65.

7.3.8 Footwear ladder shanks shall be tested for bending resistance as specified in Section 8.17, Ladder Shank Bend Resistance Test, and shall not deflect more than 6 mm (¼ in.).

7.3.9 Footwear soles shall be tested for slip resistance as specified in Section 8.18, Slip Resistance Test, and shall have a static coefficient of 0.75 or greater.

7.4 Nonencapsulating Protective Ensemble Performance Requirements.

7.4.1 Liquid splash-protective ensembles, with visors, gloves, and footwear shall be tested for liquidtight integrity as specified by Section 8.2, Liquidtight Integrity Test 1, and shall allow no liquid penetration.

7.4.2 Garment elements of nonencapsulating ensembles shall meet the performance requirements specified in Section 7.1, Protective Garment Elements and Items Performance Requirements.

7.4.3 Glove elements of nonencapsulating ensembles shall meet the performance requirements specified in Section 7.2, Protective Glove Elements and Items Performance Requirements.

7.4.4 Footwear elements of nonencapsulating ensembles shall meet the performance requirements specified in Section 7.3, Protective Footwear Elements and Items Performance Requirements.

7.5 Encapsulating Protective Ensemble Performance Requirements.

7.5.1 Encapsulating liquid splash-protective ensembles, hoods with visors, gloves, and footwear shall be tested for liquidtight integrity as specified by Section 8.2, Liquidtight Integrity Test 1, and shall allow no liquid penetration.

7.5.2 Garment elements of encapsulating ensembles shall meet the performance requirements specified in Section 7.1, Protective Garment Elements and Items Performance Requirements.

7.5.3 Glove elements of encapsulating ensembles shall meet the performance requirements specified in Section 7.2, Protective Glove Elements and Items Performance Requirements.

7.5.4 Footwear elements of encapsulating ensembles shall meet the performance requirements specified in Section 7.3, Protective Footwear Elements and Items Performance Requirements.

Copyright National Fire Protection Association
Provided by IHS under license with NFPA
No reproduction or networking permitted without license from IHS
Not for Resale

7.6 Optional Chemical Flash Fire Escape Protection Performance Requirements.

7.6.1 Liquid splash-protective ensembles and ensemble elements shall also meet the applicable requirements specified in Sections 7.1 through 7.5.

7.6.2 Liquid splash-protective ensembles or elements shall be tested for overall flash protection as specified by Section 8.19, Overall Ensemble Flash Test, and shall show afterflame times no longer than 2 seconds; in subsequent testing by test subjects of the ensemble shall allow no liquid penetration; and where a hood with visor is provided shall allow test subjects to have a visual acuity of 20/100.

7.6.3 Garment, glove, and footwear materials shall be tested for thermal protective performance (TPP) as specified in Section 8.20, Thermal Protective Performance Test, and shall have an average TPP rating of not less than 12.

7.6.4 Garment, visor, glove, and footwear materials shall be tested for resistance to flame impingement as specified in Section 8.21, Flammability Resistance Test, and shall not ignite during the initial 3-second exposure period, shall not burn a distance of greater than 100 mm (4 in.), shall not sustain burning for more than 2 seconds, and shall not melt as evidenced by flowing or dripping during the subsequent 12-second exposure period.

Chapter 8 Test Methods

8.1 Sample Preparation Procedures.

8.1.1 Application.

8.1.1.1 The sample preparation procedures contained in this section shall apply to each test method in this chapter, as specifically referenced in the sample preparation section of each test method.

8.1.1.2 Only the specific sample preparation procedure or procedures referenced in the sample preparation section of each test method shall be applied to that test method.

8.1.2 Room Temperature Conditioning Procedure.

8.1.2.1 Samples shall be conditioned at a temperature of 21°C, ±3°C (70°F, ±5°F) and a relative humidity of 65 percent, ±5 percent until equilibrium is reached, or for at least 24 hours, whichever is shortest.

8.1.2.2 Samples shall be tested within 5 minutes after removal from conditioning.

8.1.3 Flexural Fatigue Procedure for Garment Materials. Samples shall be subjected to flexural fatigue in accordance with ASTM F 392, *Standard Test Method for Flex Durability of Flexible Barrier Materials*, with the following modifications:

(1) In lieu of Flexing Conditions A, B, C, D, or E, test samples shall have a flex period of 100 cycles at 45 cycles per minute. A cycle shall be full flex and twisting action.
(2) Anisotropic materials shall be tested in both machine and transverse directions.

8.1.4 Abrasion Procedure for Garment Materials. Samples shall be abraded in accordance with ASTM D 4157, *Standard Test Method for Abrasion Resistance of Textile Fabrics (Oscillatory Cylinder Method)*, under the following conditions:

(1) A 2.3 kg (5 lb) tension weight shall be used.
(2) A 1.6 kg (3.5 lb) head weight shall be used.
(3) The abradant shall be silicone carbide, ultrafine, 600 grit.
(4) The sample shall be abraded for 25 continuous cycles.

8.1.5 Flexural Fatigue Procedure for Gloves. Sample gloves shall be subjected to one full cycle of dexterity testing as specified in Section 8.13 of this standard.

8.1.6 Flexural Fatigue Procedure for Footwear. Sample footwear shall be subjected to 100,000 flexes in accordance with FIA Standard 1209, *Whole Shoe Flex*.

8.1.7 Fatigue Procedure for Suit Closure Assemblies. Sample suit closure assemblies shall be exercised a total of 50 openings and 50 closings.

8.1.8 Dry Environment Conditioning Procedure for Garment and Glove Materials.

8.1.8.1 Samples shall be conditioned at a temperature of 24°C, ±3°C (75°F, ±5°F) and a relative humidity of 45 percent, ±5 percent until equilibrium is reached, or for at least 24 hours, whichever is shortest.

8.1.8.2 Samples shall be tested within 5 minutes after removal from conditioning.

8.2 Liquidtight Integrity Test 1.

8.2.1 Application.

8.2.1.1 This test method shall apply to garment elements, nonencapsulating ensembles, and encapsulating ensembles.

8.2.1.2 Modifications to this test method for testing nonencapsulating ensembles shall be as specified in 8.2.8.

8.2.1.3 Modifications to this test method for testing encapsulating ensembles shall be as specified in 8.2.9.

8.2.2 Sample Preparation.

8.2.2.1 Samples shall be complete garment elements or complete ensembles.

8.2.2.2 Samples shall be conditioned as specified in 8.1.2.

8.2.3 Specimens.

8.2.3.1 Specimens shall be complete garment elements or complete ensembles with all layers assembled that are required to be compliant.

8.2.3.2 At least three specimens shall be tested.

8.2.3.3 The size of the garment or ensemble comprising the specimens shall be chosen to conform with the dimensions of the mannequin for proper fit of the specimen on the mannequin in accordance with the manufacturer's sizing system. The size of the garments comprising the specimens or ensembles shall be the same as the mannequin in terms of chest circumference, waist circumference, and inseam height.

8.2.4 Apparatus. The apparatus and supplies for testing shall be those specified in ASTM F 1359, *Standard Test Method for Measuring Liquid Penetration Resistance of Protective Clothing or Protective Ensembles Under a Shower Spray While on a Mannequin*, using the following modifications:

(1) The surface tension of the water used in testing shall be 32 dynes/cm, ±2 dynes/cm (32 N/m, ±2 N/m).

Copyright National Fire Protection Association
Provided by IHS under license with NFPA
No reproduction or networking permitted without license from IHS
Not for Resale

(2) The mannequin used in testing shall have straight arms and legs, with the mannequin's right arm positioned at the mannequin's side and the mannequin's left arm bent at the elbow upward at a 45 degree angle.
(3) The absorptive garment shall cover all portions of the mannequin that are covered by the test specimen.

8.2.5 Procedure. Liquidtight integrity testing of garments shall be conducted in accordance with ASTM F 1359, *Standard Test Method for Measuring Liquid Penetration Resistance of Protective Clothing or Protective Ensembles Under a Shower Spray While on a Mannequin*, with the following modifications:

(1) No provisions for garments with a partial barrier layer shall be allowed.
(2) The method used for mounting the mannequin in the spray chamber shall not interfere with the water spray.
(3) The suited mannequin shall be exposed to the liquid spray for a total of 20 minutes, 5 minutes in each of the four specified mannequin orientations.
(4) At the end of the liquid spray exposure period, excess liquid shall be removed from the surface of the specimen.
(5) The specimen shall be inspected within 10 minutes of the end of the liquid spray exposure period for evidence of liquid penetration.

8.2.6 Report. A diagram shall be prepared for each test that records and reports the locations of any liquid leakage as detected on the liquid-absorptive garment.

8.2.7 Interpretation.

8.2.7.1 Evidence of liquid inside the specimen or on the interior of ensembles or garment elements as determined by visual, tactile, or absorbent toweling, shall constitute failure.

8.2.7.2 For glove and footwear parts of ensembles that consist of multiple separable layers, accumulation of liquid between any layers shall constitute failure.

8.2.8 Specific Requirements for Testing Nonencapsulating Ensembles.

8.2.8.1 Where nonencapsulating ensembles are tested, those portions of the body not covered by the ensemble shall be blocked off and shall not be evaluated for liquidtight integrity.

8.2.8.2 The technique used for blocking off portions of the garment shall not cover any seams and shall not extend beyond any edge of the garment more than 25 mm (1 in.).

8.2.8.3 The configuration and placement of the glove and sleeve interface shall be the same on both arms.

8.2.9 Specific Requirements for Testing Encapsulating Ensembles.

8.2.9.1 Where encapsulating ensembles are tested, all areas of the mannequin body shall be evaluated for liquidtight integrity.

8.2.9.2 If outer gloves are worn in conjunction with gloves attached to the totally encapsulating ensemble or if outer boots are worn in conjunction with garment booties to meet foot protection requirements, these items shall not collect liquid.

8.3 Overall Garment Function and Integrity Test.

8.3.1 Application.

8.3.1.1 This test method shall apply to garments, nonencapsulating ensembles, and encapsulating ensembles.

8.3.1.2 Modifications to this test method for testing nonencapsulating and encapsulating ensembles shall be as specified in 8.3.7.

8.3.2 Sample Preparation.

8.3.2.1 Samples shall be complete garments or ensembles including all outerwear and other items required to be compliant.

8.3.2.2 Samples shall be conditioned as specified in 8.1.2.

8.3.3 Specimens.

8.3.3.1 Specimens shall be complete garments or ensembles including all outerwear and other items required to be compliant.

8.3.3.2 At least one specimen shall be tested.

8.3.4 Procedure.

8.3.4.1 Overall function and integrity shall be measured in accordance with ASTM F 1154, *Standard Practices for Qualitatively Evaluating the Comfort, Fit, Function, and Integrity of Chemical Protective Suit Ensembles*, with the following parameters:

(1) Both Exercise Procedures A and B, specified in ASTM F 1154, shall be used.
(2) Specimens to be tested shall meet the sizing range of the test subjects as determined in 5.3.4. Specimens shall be donned in accordance with the manufacturer's instructions.
(3) Testing shall be conducted at 25°C, ±6°C (77°F, ±10°F) and relative humidity of 50 percent, ±20 percent.
(4) Liquidtight integrity shall be measured as specified in Section 8.2 after the exercise procedures are completed.
(5) Where hoods are part of the ensemble, test subjects shall wear head protection devices meeting the dimensional requirements of Type 1, Class G helmets of ANSI Z89.1, *Standard for Industrial Head Protection*, while performing exercise procedures.
(6) Test subjects shall wear underclothing in accordance with the manufacturer's recommendation, and a full body coverall shall be worn.

8.3.4.2 Where hoods with visors are provided, visual acuity testing shall be conducted using a standard 6.1 m (20 ft) eye chart with a normal lighting range of 100–150 ft-candles at the chart and with the test subject positioned at a distance of 6.1 m (20 ft) from the chart.

8.3.4.2.1 Test subjects shall have a minimum visual acuity of 20/20 in each eye, uncorrected or corrected with contact lenses, as determined in a visual acuity test or doctor's examination.

8.3.4.2.2 Test subjects shall wear respirators that are certified as compliant with NFPA 1981, *Standard on Open-Circuit Self-Contained Breathing Apparatus for Fire and Emergency Services.*

8.3.4.2.3 Test subjects shall then read the standard eye chart from within the ensemble through the combination of both the hood visor and the respirator facepiece lens to determine the test subject's visual acuity.

8.3.4.3 Where a protective flap is used over the closure system, the flap shall be observed to determine whether the flap remains over the closure during Exercise Procedures A and B.

8.3.4.4 Where closures are covered by a protective flap, the flap shall be inspected upon completion of the exercise procedures and before the specimen is doffed to determine if any portion of the flap has become disengaged.

Copyright National Fire Protection Association
Provided by IHS under license with NFPA
No reproduction or networking permitted without license from IHS
Not for Resale

8.3.4.5 The closures shall be inspected upon completion of the exercise procedures and before the specimen is doffed to determine if any portion of the closures has become disengaged.

8.3.5 Report.

8.3.5.1 A diagram shall be prepared for each test that records and reports the locations of any liquid leakage detected on the liquid-absorptive garment or on the inside of the specimens.

8.3.5.2 The length of time it takes for the test subjects to satisfactorily complete both exercise procedures shall be recorded and reported.

8.3.5.3 Where hoods with visors are provided, the visual acuity of the test subject when in and out of the suit shall be recorded and reported.

8.3.5.4 Where closures are covered by a protective flap, any disengagement of the protective flap observed during the exercise procedures shall be recorded and reported.

8.3.5.5 Any disengagement of the closures observed after the exercise procedures shall be recorded and reported.

8.3.6 Interpretation.

8.3.6.1 Evidence of liquid on the absorbent mannequin garment or inside the specimen as determined by visual, tactile, or absorbent toweling shall constitute failure.

8.3.6.1.1 Where encapsulating ensembles are tested, all areas of the mannequin body shall be evaluated for liquidtight integrity.

8.3.6.1.2 Where garments or nonencapsulating ensembles are tested, those portions of the body not covered by the specimen shall not be evaluated for liquidtight integrity.

8.3.6.2 The inability of the test subjects to satisfactorily complete both exercise procedures within 15 minutes shall constitute failure.

8.3.6.3 Where hoods with visors are provided, the test subjects' inability to demonstrate visual acuity of 20/35 or better through the combination of both the hood visor and the respirator facepiece lens shall constitute failure.

8.3.6.4 Where closures are covered by a protective flap, any disengagement of the closure of the protective flap after the exercise sequences shall constitute failure.

8.3.6.5 Any disengagement of the closures after the exercise sequences shall constitute failure.

8.3.7 Specific Requirements for Testing Nonencapsulating and Encapsulating Ensembles.

8.3.7.1 Garment overall function and integrity shall be measured in accordance with ASTM F 1154, *Standard Practices for Qualitatively Evaluating the Comfort, Fit, Function, and Integrity of Chemical Protective Suit Ensembles*, using both Procedure A and Procedure B.

8.3.7.2 Testing shall be performed as specified in 8.3.2 through 8.3.3.

8.4 Chemical Penetration Resistance Test.

8.4.1 Application.

8.4.1.1 This test method shall apply to garment materials, garment seams, visor materials, glove materials, and footwear materials.

8.4.1.2 Modifications to this test method for testing visor materials without abrading or flexing shall be as specified in 8.4.7.

8.4.1.3 Modifications to this test method for testing garment materials after flexing and abrading shall be as specified in 8.4.8.

8.4.1.4 Modifications to this test method for testing glove materials after flexing and abrading shall be as specified in 8.4.9.

8.4.1.5 Modifications to this test method for testing footwear materials after flexing and abrading shall be as specified in 8.4.10.

8.4.1.6 Modifications to this test method for testing seams shall be as specified in 8.4.11.

8.4.2 Sample Preparation.

8.4.2.1 Samples shall be the chemical protection layer of the size specified in the modifications.

8.4.2.2 Samples shall be conditioned as specified in 8.1.2 after the conditioning specified in the modifications.

8.4.3 Specimens.

8.4.3.1 Specimens shall be the size specified in ASTM F 903, *Standard Test Method for Resistance of Protective Clothing Materials to Penetration by Liquids.*

8.4.3.2 At least three specimens shall be tested per chemical.

8.4.4 Procedure.

8.4.4.1 Penetration testing shall be conducted against the following liquid chemicals:

(1) Acetone
(2) Ethyl acetate
(3) 50 percent w/w sodium hydroxide
(4) 93.1 percent w/w sulfuric acid
(5) Tetrahydrofuran

8.4.4.2 Penetration resistance shall be measured in accordance with ASTM F 903, *Standard Test Method for Resistance of Protective Clothing Materials to Penetration by Liquids*, Procedure C, using the following modifications:

(1) All tests shall be conducted at 25°C, ±3°C (77°F, ±5°F) and 65 percent, ±5 percent relative humidity.
(2) The plexiglass shield shall be omitted from the test cell.
(3) Use of blotting paper at the end of the test shall be permitted to assist in the visual observation of liquid penetration. Visual observed chemical on the blotting paper shall constitute failure of this test.
(4) An observation to determine specimen penetration shall be made at the end of the chemical contact period.

8.4.5 Report. The pass or fail results for each chemical tested and identification of location where penetration occurs, if discernible, shall be recorded and reported.

8.4.6 Interpretation. Observed liquid penetration at the end of the test for any specimen shall constitute failure.

8.4.7 Specific Requirements for Testing Visor Materials. Samples for conditioning shall be visor material(s).

8.4.8 Specific Requirements for Testing Garment Materials After Flexing and Abrading.

8.4.8.1 Samples for conditioning shall be 200 mm × 280 mm (8 in. × 11 in.) rectangles.

Copyright National Fire Protection Association
Provided by IHS under license with NFPA
No reproduction or networking permitted without license from IHS
Not for Resale

8.4.8.2 Samples shall first be conditioned by flexing as specified in 8.1.3.

8.4.8.3 Following flexing, three samples for abrasion conditioning, each measuring 75 mm × 230 mm (3 in. × 9 in.), shall be cut from the center of the flexed sample.

8.4.8.4 At least one specimen for abrasion conditioning shall be taken from a sample flexed in the machine direction, and at least one specimen for abrasion conditioning shall be taken from a sample flexed in the cross-machine direction for each chemical tested.

8.4.8.5 The new samples shall then be conditioned by abrading as specified in 8.1.4.

8.4.8.6 Following abrasion, only one specimen for penetration resistance testing shall be taken from each sample subjected to abrasion.

8.4.8.7 The penetration test specimen shall be taken from the exact center of the abraded sample so that the center of the penetration test and the center of the abraded sample coincide.

8.4.9 Specific Requirements for Testing Glove Materials After Flexing and Abrading.

8.4.9.1 Samples for conditioning shall be whole gloves.

8.4.9.2 Samples shall first be conditioned by flexing as specified in 8.1.5.

8.4.9.3 Following flexing, a new sample shall be cut from the gauntlet portion of the flexed sample that measures 75 mm × 230 mm (3 in. × 9 in.).

8.4.9.4 The new samples shall then be conditioned by abrading as specified in 8.1.4.

8.4.9.5 Following abrasion, only one specimen for penetration resistance testing shall be taken from each sample subjected to abrasion.

8.4.9.6 The penetration test specimen shall be taken from the exact center of the abraded sample so that the center of the penetration test and the center of the abraded sample coincide.

8.4.10 Specific Requirements for Testing Footwear Materials After Flexing and Abrading.

8.4.10.1 This test shall apply to all types of footwear configurations. If the footwear incorporates a bootie constructed of garment material, the garment material flex fatigue resistance test shall be permitted to be substituted for this test.

8.4.10.2 Samples for conditioning shall be whole footwear items.

8.4.10.3 Samples shall first be conditioned by flexing as specified in 8.1.6.

8.4.10.4 Following flexing, new samples shall be taken in areas from the footwear upper where the greatest flexing occurred, usually at the footwear quarter or vamp, measuring 75 mm × 230 mm (3 in. × 9 in.).

8.4.10.5 The new samples shall then be conditioned by abrading as specified in 8.1.4.

8.4.10.6 Following abrasion, only one specimen for penetration resistance testing shall be taken from each sample subjected to abrasion.

8.4.10.7 The penetration test specimen shall be taken from the exact center of the abraded sample so that the center of the penetration test and the center of the abraded sample coincide.

8.4.11 Specific Requirements for Testing Garment or Glove Seams.

8.4.11.1 Samples for conditioning shall be 610 mm (24 in.) lengths of prepared seam or cut from vapor-protective ensembles.

8.4.11.2 Seam specimens shall be prepared from seam samples that have a minimum of 75 mm (3 in.) of material on each side of the seam center.

8.4.11.3 Penetration test specimens shall be cut such that the exact seam center divides the specimen in half.

8.4.11.4 Seam specimens shall be prepared representing or shall be taken from each different type of seam found in the garment, including as a minimum the garment-to-garment material seams and the garment-to-visor material seams.

8.4.11.5 Seam specimens shall be taken from gloves from the gauntlet portion of the glove when an external seam is used in the construction of the glove.

8.5 Burst Strength Test.

8.5.1 Application.

8.5.1.1 This test shall apply to garment and visor materials.

8.5.1.2 Where the garment or visor is constructed of several separable layers, then all layers shall be assembled in the order in which they appear in the garment or visor, and shall be tested as a composite.

8.5.2 Sample Preparation.

8.5.2.1 Samples shall be at least 305 mm (12 in.) squares of material.

8.5.2.2 Samples shall be conditioned as specified in 8.1.2.

8.5.3 Specimens.

8.5.3.1 Specimens shall be the size specified in ASTM D 751, *Standard Test Methods for Coated Fabrics.*

8.5.3.2 At least 10 specimens shall be tested.

8.5.4 Procedure. Specimens shall be tested in accordance with Section 18.2, Tensile Testing Machine with Ring Clamp, in ASTM D 751, *Standard Test Methods for Coated Fabrics*, using the tension testing machine with ring clamp.

8.5.5 Report.

8.5.5.1 The burst strength of each specimen shall be recorded and reported to the nearest 1 N (0.25 lbf).

8.5.5.2 The average burst strength of all specimens shall be calculated, recorded, and reported.

8.5.6 Interpretation. The average burst strength shall be used to determine the pass or fail performance.

8.6 Puncture Propagation Tear Resistance Test.

8.6.1 Application.

8.6.1.1 This test shall apply to garment and visor materials.

Copyright National Fire Protection Association
Provided by IHS under license with NFPA
No reproduction or networking permitted without license from IHS
Not for Resale

8.6.1.2 Where the protective garment is constructed of several layers, then all layers, assembled in the order in which they appear in the garment, shall be tested as a composite.

8.6.2 Sample Preparation.

8.6.2.1 Samples shall be at least 1 m (1 yd) squares of material.

8.6.2.2 Samples shall be conditioned as specified in 8.1.2.

8.6.3 Specimens.

8.6.3.1 Specimens shall be the size specified in ASTM D 2582, *Standard Test Method for Puncture Propagation Tear Resistance of Plastic Film and Thin Sheeting*.

8.6.3.2 At least five specimens in each of the warp direction, machine and coarse, and each of the filling directions, cross-machine and wale, shall be tested.

8.6.3.3 If the material is isotropic, then at least 10 specimens shall be tested.

8.6.4 Procedure. Specimens shall be tested in accordance with ASTM D 2582, *Standard Test Method for Puncture Propagation Tear Resistance of Plastic Film and Thin Sheeting*.

8.6.5 Report.

8.6.5.1 The puncture propagation tear resistance of each specimen shall be recorded and reported to the nearest 0.445 N (0.1 lbf).

8.6.5.2 An average puncture propagation tear resistance shall be calculated, recorded, and reported for warp and filling directions.

8.6.6 Interpretation.

8.6.6.1 Pass/fail performance shall be based on the average puncture propagation tear resistance in the warp direction and filling direction.

8.6.6.2 Failure in any one direction shall constitute failure for the material.

8.7 Cold Temperature Performance Test 1.

8.7.1 Application. This test method shall apply to garment and glove materials.

8.7.2 Sample Preparation.

8.7.2.1 Samples shall be at least 1 m (1 yd) squares of material.

8.7.2.2 Samples shall be conditioned as specified in 8.1.2.

8.7.3 Specimens.

8.7.3.1 Specimens shall be the size specified in ASTM D 747, *Standard Test Method for Apparent Bending Modulus of Plastics by Means of a Cantilever Beam*.

8.7.3.2 At least five specimens in each of the warp directions, machine and coarse, and each of the filling directions, cross-machine or wale, shall be tested.

8.7.3.3 If the material is isotropic, then at least 10 specimens shall be tested.

8.7.4 Procedure. Specimens shall be tested in accordance with ASTM D 747, *Standard Test Method for Apparent Bending Modulus of Plastics by Means of a Cantilever Beam*, with the following modifications:

(1) The test temperature shall be −25°C (−13°F).

(2) The bending moment shall be that applied when the specimen is bent to a 60-degree angular deflection and shall be calculated in inch-pounds as follows:

$$\text{Bending moment} = \frac{\text{load scale reading} \times \text{moment weight}}{100}$$

$$\text{Bending moment (Nm)} = \text{bending moment, in.-lb} \times 0.113$$

8.7.5 Report. Cold temperature performance results shall be recorded and reported as the average for each material direction.

8.7.6 Interpretation. Failure of the material in any direction shall constitute failing performance.

8.8 Seam/Closure Breaking Strength Test.

8.8.1 Application.

8.8.1.1 This test shall be applied to garment seams and the garment closure assembly used in the construction of the garment, including at least garment and garment-visor seams.

8.8.1.2 Where the garment consists of multiple separable layers, then the test shall be applied to the seams and closure assemblies of each separable layer.

8.8.1.3 Modifications to this test method for testing seams shall be as specified in 8.8.7.

8.8.1.4 Modifications to this test method for testing closure assemblies shall be as specified in 8.8.8.

8.8.2 Sample Preparation.

8.8.2.1 Samples shall be 610 mm (24 in.) lengths of seam or closure assembly.

8.8.2.2 Samples shall be cut from the finished garment or ensemble.

8.8.2.3 Lengths of seam shall be permitted to be prepared by representatively joining two pieces of the garment material instead of being cut from the garment.

8.8.2.4 Samples shall be conditioned as specified in 8.1.2.

8.8.3 Specimens.

8.8.3.1 Specimens shall be the size specified in ASTM D 751, *Standard Test Methods for Coated Fabrics*.

8.8.3.2 At least five specimens shall be tested for each seam and closure assembly type.

8.8.4 Procedure. All seams and closure assemblies shall be tested in accordance with ASTM D 751, *Standard Test Methods for Coated Fabrics*.

8.8.5 Report.

8.8.5.1 The breaking strength for each seam or closure assembly specimen shall be recorded and reported.

8.8.5.2 The average breaking strength for each seam or closure assembly type shall also be calculated, recorded, and reported.

8.8.5.3 The types of seams and closure assemblies tested shall be recorded reported as to whether the specimens were cut from the finished garment or prepared from fabric samples.

8.8.6 Interpretation. The average seam breaking strength for each seam type shall be used to determine the pass or fail performance.

Copyright National Fire Protection Association
Provided by IHS under license with NFPA
No reproduction or networking permitted without license from IHS
Not for Resale

8.8.7 Specific Procedures for Testing Seams. Samples for conditioning shall include 150 mm (6 in.) of material on either side of the seam.

8.8.8 Specific Procedures for Testing Closure Assemblies.

8.8.8.1 Samples for conditioning shall include 150 mm (6 in.) of material on either side of the closure.

8.8.8.2 Specimens shall be conditioned as specified in 8.1.7.

8.9 Cold Temperature Performance Test 2.

8.9.1 Application. This test method shall apply to visor materials.

8.9.2 Sample Preparation.

8.9.2.1 Samples shall be at least 305 mm (12 in.) squares of visor material.

8.9.2.2 Samples shall be conditioned as specified in 8.1.2.

8.9.3 Specimens.

8.9.3.1 Specimens shall be the size specified in ASTM D 2136, *Standard Test Method for Coated Fabrics — Low-Temperature Bend Test.*

8.9.3.2 At least five specimens shall be tested.

8.9.4 Procedure.

8.9.4.1 Specimens shall be tested in accordance with ASTM D 2136, *Standard Test Method for Coated Fabrics — Low-Temperature Bend Test.*

8.9.4.2 Following this testing, specimens shall be examined for evidence of damage. Damage shall include any breakage, cracks, tears, or separation, but shall not include discoloration along the folded area.

8.9.5 Report. Observations of visible damage shall be recorded and reported for each specimen.

8.9.6 Interpretation.

8.9.6.1 Damage of any one specimen shall constitute failing performance.

8.9.6.2 Rigid visors that do not bend, but exhibit no evidence of damage, shall be considered to have passing performance.

8.10 Liquidtight Integrity Test 2.

8.10.1 Application.

8.10.1.1 This test method shall apply to gloves and footwear.

8.10.1.2 Modifications to this test method for testing gloves shall be as specified in 8.10.7.

8.10.1.3 Modifications to this test method for testing footwear shall be as specified in 8.10.8.

8.10.2 Sample Preparation.

8.10.2.1 Samples shall be whole gloves or footwear with all layers assembled that are required for the element to be compliant.

8.10.2.2 Samples shall be conditioned as specified in 8.1.2 after the conditioning specified in the modifications.

8.10.3 Specimens.

8.10.3.1 Specimens shall be whole gloves or footwear with all layers assembled that are required for the element to be compliant.

8.10.3.2 At least 10 specimens shall be tested.

8.10.4 Procedure. Liquidtight integrity testing of gloves and footwear shall be conducted in accordance with ASTM D 5151, *Standard Test Method for Detection of Holes in Medical Gloves*, with the following modifications:

(1) The surface tension of the water used in testing shall be 32 dynes/cm, ±2 dynes/cm (32 N/m, ±2 N/m).
(2) The surfactant-treated water shall remain in the specimen for a period of 1 hour, +5/–0 minutes.
(3) Observations for leakage shall be performed at the end of the test period.
(4) Blotting paper shall be permitted to be used for assisting in the determination that liquid leakage has occurred.

8.10.5 Report. Observations of water leakage shall be recorded and reported by specific area on the test specimen.

8.10.6 Interpretation. Any evidence of water leakage, as determined by visual, tactile, or absorbent blotting, shall constitute failure of the specimen.

8.10.7 Specific Requirements for Testing Gloves.

8.10.7.1 Specimens shall be conditioned as specified in 8.1.5.

8.10.7.2 A sufficient amount of surfactant-treated water shall be added to the specimen so that the water is within 25 mm (1 in.) of the edge of the glove opening.

8.10.8 Specific Requirements for Testing Footwear.

8.10.8.1 Specimens shall be conditioned as specified in 8.1.6.

8.10.8.2 A sufficient amount of surfactant-treated water shall be added to the specimen so that the water is within 25 mm (1 in.) of the edge of the footwear opening.

8.11 Cut Resistance Test.

8.11.1 Application.

8.11.1.1 This test method shall apply to glove and footwear upper materials.

8.11.1.2 Modifications to this test method for evaluation of glove materials shall be as specified in 8.11.7.

8.11.1.3 Modifications to this test method for evaluation of footwear upper materials shall be as specified in 8.11.8.

8.11.2 Sample Preparation.

8.11.2.1 Samples shall be whole gloves or footwear uppers consisting of all layers.

8.11.2.2 Samples shall be conditioned as specified in 8.1.2 after the conditioning specified in the modifications.

8.11.3 Specimens.

8.11.3.1 Specimens shall be the size specified in ASTM F 1790, *Standard Test Methods for Measuring Cut Resistance of Materials Used in Protective Clothing.*

8.11.3.2 At least three specimens of glove material or footwear upper material shall be tested.

8.11.4 Procedure. Specimens shall be evaluated in accordance with ASTM F 1790, *Standard Test Methods for Measuring Cut Resistance of Materials Used in Protective Clothing*, with the modification that specimens shall be tested to a specific load with the measurement of distance of blade travel.

Copyright National Fire Protection Association
Provided by IHS under license with NFPA
No reproduction or networking permitted without license from IHS
Not for Resale

8.11.5 Report.

8.11.5.1 The distance of blade travel shall be recorded and reported to the nearest 1 mm (1/32 in.) for each sample specimen.

8.11.5.2 The average distance of blade travel in mm (in.) shall be recorded and reported for all specimens tested.

8.11.6 Interpretation. The average distance of blade travel shall be used to determine the pass or fail performance.

8.11.7 Specific Requirements for Testing Glove Materials.

8.11.7.1 Specimens shall be taken from the back and palm of the glove and shall not include seams.

8.11.7.2 Cut resistance testing shall be performed under a load of 75 g (2.6 oz).

8.11.8 Specific Requirements for Testing Footwear Upper Materials.

8.11.8.1 Specimens shall be taken from the parts of the footwear upper that provide uniform thickness and shall not include seams.

8.11.8.2 Cut resistance testing shall be performed under a load of 400 g (14 oz).

8.12 Puncture Resistance Test 1.

8.12.1 Application.

8.12.1.1 This test shall be applied to glove and footwear upper materials.

8.12.1.2 Modifications to this test method for testing glove materials shall be as specified in 8.12.7.

8.12.1.3 Modifications to this test method for testing footwear upper material shall be as specified in 8.12.8.

8.12.2 Sample Preparation.

8.12.2.1 Samples shall be complete gloves or footwear uppers consisting of all layers.

8.12.2.2 Samples shall be conditioned as specified in 8.1.2 after the conditioning specified in the modifications.

8.12.3 Specimens.

8.12.3.1 Specimens shall be at least 150 mm (6 in.) squares.

8.12.3.2 At least three specimens of glove material or footwear upper material shall be tested.

8.12.4 Procedure. Specimens shall be tested in accordance with ASTM F 1342, *Standard Test Method for Resistance of Protective Clothing Materials to Puncture.*

8.12.5 Report.

8.12.5.1 The puncture force shall be recorded and reported for each specimen to the nearest 0.5 N (0.125 lbf) of force.

8.12.5.2 The average puncture force shall be reported for all specimens tested.

8.12.6 Interpretation. The average puncture force shall be used to determine the pass or fail performance.

8.12.7 Specific Requirements for Testing Glove Materials.

8.12.7.1 Specimens shall consist of each composite of the palm, palm side of the fingers, and back of the glove used in actual suit glove configuration, with layers arranged in the proper order.

8.12.7.2 Where the specimen composites of the palm, palm side of the fingers, and back of the glove are identical, only one representative composite shall be required to be tested.

8.12.8 Specific Requirements for Testing Footwear Upper Materials.

8.12.8.1 Specimens shall consist of each composite of the footwear item used in the actual suit footwear configuration, with layers arranged in proper order.

8.12.8.2 Specimens shall be taken from the thinnest portion of the footwear upper.

8.13 Gloved Hand Dexterity Test.

8.13.1 Application. This test shall apply to gloves.

8.13.2 Samples.

8.13.2.1 A minimum of three glove pairs each for small and large sizes shall be used for testing.

8.13.2.2 Each glove pair shall be tested as a complete set of gloves in new, as distributed, condition.

8.13.2.3 Glove pair samples shall not receive special softening treatments prior to tests.

8.13.3 Specimen Preparation.

8.13.3.1 Glove pair specimens shall be conditioned as specified in 8.1.2.

8.13.3.2 Specimens for conditioning shall be whole glove pairs.

8.13.4 Apparatus. The test apparatus shall be as specified in ASTM F 2010, *Standard Test Method for Evaluation of Glove Effects on Wearer Hand Dexterity Using a Modified Pegboard Test.*

8.13.5 Procedures. Testing shall be conducted in accordance with ASTM F 2010, *Standard Test Method for Evaluation of Glove Effects on Wearer Hand Dexterity Using a Modified Pegboard Test.*

8.13.6 Report. The average percent of barehanded control shall be recorded and reported for each test subject. The average percent of barehanded control for all test subjects shall be calculated, recorded, and reported.

8.13.7 Interpretation. The average percent of barehand control shall be used to determine the pass or fail performance.

8.14 Puncture Resistance Test 2.

8.14.1 Application. This test method shall apply to footwear soles.

8.14.2 Sample Preparation.

8.14.2.1 Samples shall be footwear sole sections.

8.14.2.2 Samples shall be conditioned as specified in 8.1.2.

8.14.3 Specimens.

8.14.3.1 Specimens shall be the size specified in Section 5 of ANSI Z41, *Standard for Personal Protection — Protective Footwear.*

8.14.3.2 At least three specimens shall be tested.

8.14.4 Procedure. Puncture resistance tests shall be performed in accordance with Section 5 of ANSI Z41, *Standard for Personal Protection — Protective Footwear.*

8.14.5 Report. The force required to puncture the sole reinforcement device of each specimen shall be recorded and reported.

--`,,```,,,,````-`-`,,`,,`,`,,`---

Copyright National Fire Protection Association
Provided by IHS under license with NFPA
No reproduction or networking permitted without license from IHS
Not for Resale

8.14.6 Interpretation. One or more footwear specimens failing this test shall constitute failing performance.

8.15 Abrasion Resistance Test.

8.15.1 Application. This test method shall apply to footwear soles.

8.15.2 Sample Preparation.

8.15.2.1 Samples shall be footwear soles.

8.15.2.2 Samples shall be conditioned as specified in 8.1.2.

8.15.3 Specimens.

8.15.3.1 Specimens shall be the size specified in ASTM D 1630, *Standard Test Method for Rubber Property — Abrasion Resistance (NBS Abrader).*

8.15.3.2 At least three specimens shall be tested.

8.15.4 Procedure. Puncture resistance shall be performed in accordance with ASTM D 1630, *Standard Test Method for Rubber Property — Abrasion Resistance (NBS Abrader).*

8.15.5 Report. The abrasion resistance rating of each specimen shall be recorded and reported.

8.15.6 Interpretation. One or more footwear specimens failing this test shall constitute failing performance.

8.16 Impact and Compression Test.

8.16.1 Application. This test method shall apply to the toe section of the footwear.

8.16.2 Sample Preparation.

8.16.2.1 Samples shall be complete footwear toes.

8.16.2.2 Samples shall be conditioned as specified in 8.1.2.

8.16.3 Specimens.

8.16.3.1 Specimens shall be the size specified in Section 1.4 of ANSI Z41, *Standard for Personal Protection — Protective Footwear.*

8.16.3.2 At least three specimens shall be tested for both impact and compression.

8.16.4 Procedure. Footwear specimens shall be tested in accordance with Section 1.4 of ANSI Z41, *Standard for Personal Protection — Protective Footwear.*

8.16.5 Report. The impact and compression forces for each specimen shall be recorded and reported.

8.16.6 Interpretation. One or more footwear specimens failing this test shall constitute failing performance.

8.17 Ladder Shank Bend Resistance Test.

8.17.1 Application. This test method shall apply to footwear ladder shanks.

8.17.2 Sample Preparation.

8.17.2.1 Samples shall be footwear ladder shanks.

8.17.2.2 Samples shall be conditioned as specified in 8.1.2.

8.17.3 Specimens.

8.17.3.1 Specimens shall be footwear ladder shanks.

8.17.3.2 At least three specimens shall be tested.

8.17.4 Apparatus.

8.17.4.1 The apparatus shall consist of an Instron tensile testing machine or equivalent that challenges a specimen with a simulated ladder rung.

8.17.4.2 A 32 mm diameter × 50 mm long (1¼ in. diameter × 2 in. long) noncompressible probe shall be mounted on the movable arm.

8.17.4.3 The specimen support assembly shall consist of two 50 mm × 25 mm × 25 mm (2 in. × 1 in. × 1 in.) noncompressible blocks placed 50 mm (2 in.) apart as shown in Figure 8.17.4.3.

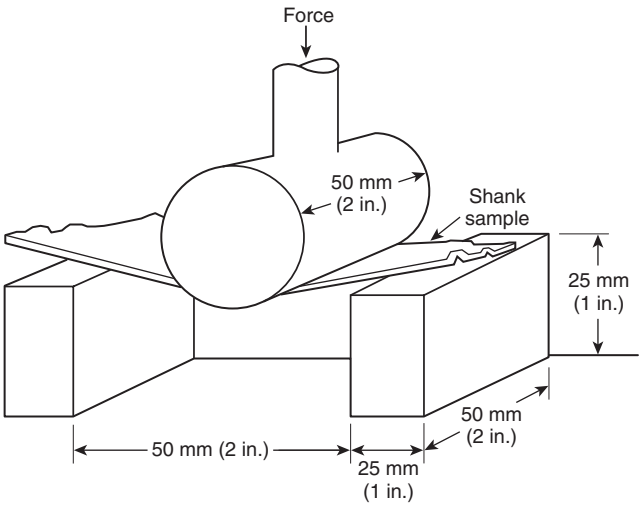

FIGURE 8.17.4.3 Ladder Shank Bend Test Set-Up.

8.17.5 Procedure. The ladder shank shall be placed on mounting blocks as it would be oriented toward the ladder when affixed into the protective footwear and subjected to force on its center with the test probe operated at 50 mm/min (2 in./min).

8.17.6 Report.

8.17.6.1 Deflection at 182 kg (400 lb) shall be recorded and reported to the nearest 1 mm (3⁄64 in.).

8.17.6.2 The average deflection shall be calculated, recorded, and reported to the nearest 1 mm (3⁄64 in.).

8.17.7 Interpretation. The average deflection for all specimens tested shall be used to determine the pass or fail performance.

8.18 Slip Resistance Test.

8.18.1 Application. This test method shall apply to footwear soles.

8.18.2 Sample Preparation.

8.18.2.1 Samples shall be complete footwear elements.

8.18.2.2 Samples shall be conditioned as specified in 8.1.2.

8.18.3 Specimens.

8.18.3.1 Specimens shall be complete footwear elements.

8.18.3.2 At least three specimens shall be tested.

8.18.4 Procedure. Slip resistance shall be performed in accordance with ASTM F 489, *Standard Test Method for Static Coefficient of Friction of Shoe Sole and Heel Materials as Measured by the James Machine,* in a dry condition.

Copyright National Fire Protection Association
Provided by IHS under license with NFPA
No reproduction or networking permitted without license from IHS
Not for Resale

8.18.5 Report. The static coefficient of friction under both dry and wet conditions of each specimen shall be recorded and reported.

8.18.6 Interpretation. One or more footwear specimens failing this test shall constitute failing performance.

8.19 Overall Ensemble Flash Test.

8.19.1 Application. This test method shall apply to complete liquid splash-protective ensembles, garments, gloves, and footwear.

8.19.2 Sample Preparation.

8.19.2.1 Samples shall be complete liquid splash-protective ensembles, full garments, gloves, or footwear.

8.19.2.2 Samples shall be conditioned as specified in 8.1.2.

8.19.3 Specimens.

8.19.3.1 Specimens shall be complete liquid splash-protective ensembles, full garments, gloves, or footwear.

8.19.3.2 At least one specimen shall be tested.

8.19.3.3 Additional protective clothing components and equipment that are necessary to provide flash protection to the wearer shall be tested in conjunction with the liquid splash-protective clothing or ensemble.

8.19.4 Apparatus.

8.19.4.1 A human form mannequin shall be used to support the protective suit during chemical flash fire testing.

8.19.4.2 The mannequin shall be coated with a suitable flame-retardant coating.

8.19.4.3 A one-piece flame-resistant coverall shall be placed over the mannequin.

8.19.4.4 The garment, gloves, and footwear to be tested shall be placed on the mannequin, over the flame-resistant clothing, in accordance with the manufacturer's instructions.

8.19.4.5 A flash chamber shall be constructed as illustrated in Figure 8.19.4.5 and shall include the following:

(1) The chamber shall have an internal width and depth of 1.83 m, ±100 mm (6 ft, ±4 in.) and a height of 2.44 m, ±100 mm (8 ft, ±4 in.).
(2) The chamber shall be constructed of 50 mm × 100 mm (2 in. × 4 in.) framing lumber or other suitable structural material. A fire wall, 20 mm (¾ in.), or other suitable flame-resistant paneling shall be used on the opposite two walls of the chamber. A piece of 13 mm (½ in.) heat-tempered safety glass shall be used on the remaining walls for multiple viewing points during testing. At least one of the glass walls shall be attached by a means that allows for easy removal of the mannequin. Both glass walls shall be configured to achieve gastight seals with the chamber.
(3) All fire wall seams shall be taped and the interior walls of the chamber coated with a suitable flame-retardant material.
(4) The chamber shall have a port for filling the chamber with propane gas located as shown in Figure 8.19.4.5. The port shall allow isolation of the propane source through a valve. The port shall be leak-free with respect to the outside environment.
(5) The chamber shall have two ports for electric ignitors located as shown in Figure 8.19.4.5. The port shall be leak-free with respect to the outside environment.
(6) The chamber shall have a top that allows containment of propane gas within the chamber during filling and venting of flash pressure after ignition.
(7) A suitable stand shall be constructed that allows the mannequin to be positioned 305 mm, ±25 mm (12 in., ±1 in.) above the chamber floor.

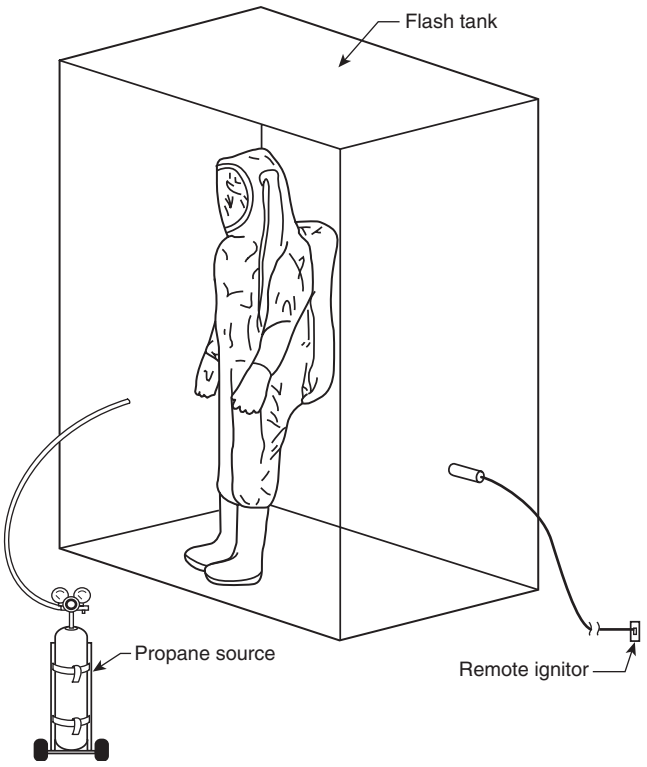

FIGURE 8.19.4.5 Overall Ensemble Chemical Flash Chamber.

8.19.5 Procedure.

8.19.5.1 The suited mannequin shall be placed on the stand in the center of the flash chamber in an upright stationary position.

8.19.5.2 Propane gas at 99 percent purity or better shall be metered into the chamber at a delivery pressure of 172.3 kPa, ±13.8 kPa (25 psi, ±2 psi) and rate of 0.16 m^3/min, ±0.01 m^3/min (5.5 ft^3/min, ±0.5 ft^3/min).

8.19.5.2.1 The concentration of propane within the chamber shall be sufficient to produce a visible chemical flash fire lasting 7 seconds, ±1 second.

8.19.5.2.2 The concentration of the propane shall be permitted to be checked by a combustible gas meter or similar detector.

8.19.5.3 The flash chamber shall be viewed at both vantage points, front and back, throughout the test. Video documentation shall also be conducted from the front vantage point.

8.19.5.4 The chamber atmosphere shall be remotely ignited at 30 seconds, ±5 seconds after the chamber has been filled with propane gas.

8.19.5.5 The suited mannequin shall not be removed until all surfaces have cooled to ambient temperature.

Copyright National Fire Protection Association
Provided by IHS under license with NFPA
No reproduction or networking permitted without license from IHS
Not for Resale

8.19.5.6 The protective clothing or ensemble shall be removed from the mannequin and examined visually for signs of physical damage from thermal exposure.

8.19.5.7 A liquidtight integrity test shall be performed on the protective clothing or ensemble in accordance with Section 8.2 after the chemical flash fire exposure.

8.19.5.8 Following liquidtight integrity testing, the suit shall be donned by a test subject and evaluated as follows:

(1) The test subject shall have a minimum visual acuity of 20/20 in each eye, uncorrected or corrected with contact lenses, as determined in a visual acuity test or doctor's examination.
(2) Visual acuity testing within the suit shall be conducted using a standard 6.1 m (20 ft) eye chart with a normal lighting range of 100–150 ft-candles at the chart and with the test subject positioned at a distance of 6.1 m (20 ft) from the chart.
(3) The test subject shall then read the standard eye chart through the lens of the SCBA facepiece and suit visor to determine his or her visual acuity.

8.19.5.9 All testing shall be performed at a temperature of 24°C, ±11°C (75°F, ±20°F) and a relative humidity of 70 percent, ±25 percent. Tests shall not be conducted outdoors during precipitation.

8.19.6 Report.

8.19.6.1 The post-flash exposure liquidtight integrity test result, afterflame time, and visor clarity shall be reported and recorded for each test specimen.

8.19.6.2 An illustration of the protective clothing or ensemble as shown in Figure 8.19.6.2, shall be prepared, and the location of any damage shall be recorded on the illustration and reported. Separate illustrations shall be prepared for over covers if tested with the protective suit. The damage to be reported shall include but not be limited to the following:

(1) Charring
(2) Blistering
(3) Evidence of material melting
(4) Delamination
(5) Destruction of any suit components

8.19.7 Interpretation.

8.19.7.1 Any specimen with an afterflame time greater than 2 seconds shall constitute failing performance.

8.19.7.2 Liquid found on the inner liquid-absorptive garment following liquidtight integrity testing shall constitute failing performance.

8.19.7.3 The visual acuity of the test subject inside the suit shall be used for determining the pass or fail performance.

8.19.8 Specific Requirements for Testing Garments, Gloves, and Footwear. Where garments, gloves, and footwear that do not cover the entire mannequin are tested, items of clothing constructed of flame-resistant materials shall be used to cover those exposed portions of the mannequin body in a manner that does not cover the item being evaluated.

8.20 Thermal Protective Performance Test.

8.20.1 Application. This test method shall apply to protective garment materials, glove materials, and footwear upper materials.

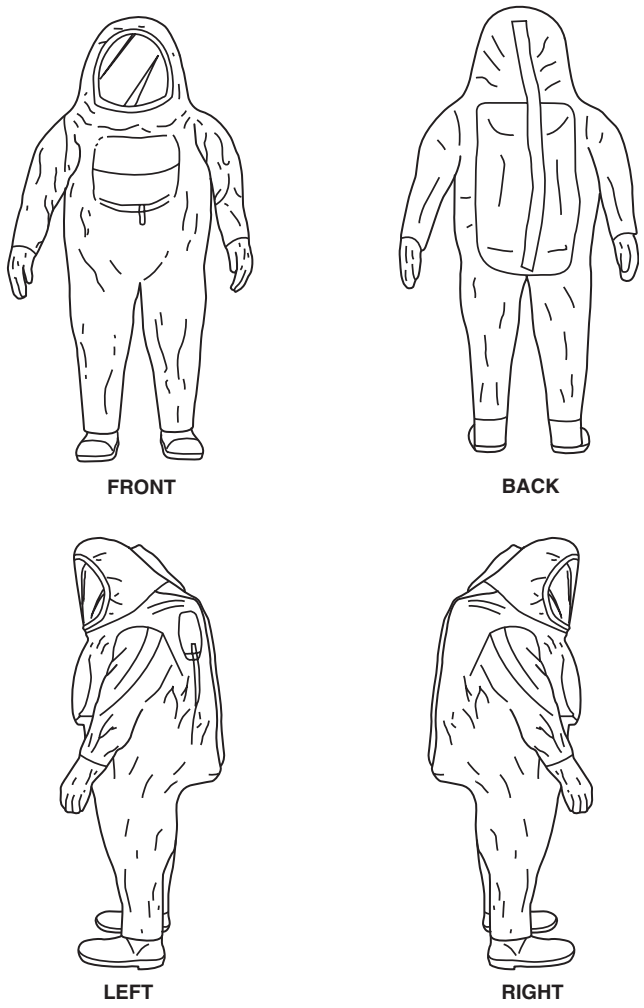

FIGURE 8.19.6.2 Suit Diagram (for noting damage locations).

8.20.2 Specimens.

8.20.2.1 Thermal protective performance (TPP) testing shall be conducted on three specimens.

8.20.2.2 Specimens shall measure 150 mm × 150 mm, ±6 mm (6 in. × 6 in., ±¼ in.) and shall consist of all layers representative of the clothing item to be tested.

8.20.3 Samples. Samples shall be conditioned as specified in 8.1.2.

8.20.4 Apparatus. The test apparatus specified in ISO 17492, *Clothing for protection against heat and flame — determination of heat transmission on exposure to both flame and radiant heat*, shall be used.

8.20.5 Procedure. Radiant protective performance testing shall be performed in accordance with ISO 17492, *Clothing for protection against heat and flame — determination of heat transmission on exposure to both flame and radiant heat*, shall be used with the following modifications:

(1) An exposure heat flux of 84 kW/m^2 (2.0 cal/cm^{2}s) shall be used.

Copyright National Fire Protection Association
Provided by IHS under license with NFPA
No reproduction or networking permitted without license from IHS
Not for Resale

(2) The contact configuration shall be used for testing of all material specimens.
(3) The thermal threshold index analysis method shall be used with calculations made using the heat flux in calories per square centimeter per second and reported as the TPP rating.
(4) T-150 quartz tubes shall be used.

8.20.6 Report.

8.20.6.1 The individual test TPP rating of each specimen shall be recorded and reported. The average TPP rating shall be calculated, recorded, and reported.

8.20.6.2 Where a TPP rating is greater than 60, then the TPP rating shall be reported as ">60."

8.20.7 Interpretation.

8.20.7.1 Pass or fail performance determinations shall be separately based on the average reported TPP rating of all specimens.

8.20.7.2 Where an individual result from any test set varies more than ±10 percent from the average result, the results from the test set shall be discarded and another set of specimens shall be tested.

8.21 Flammability Resistance Test.

8.21.1 Application. This test method shall apply to garment materials, visor materials, glove materials, and footwear.

8.21.2 Samples.

8.21.2.1 Samples shall be conditioned as specified in 8.1.2.

8.21.2.2 Samples for conditioning shall be at least a 1 m (1 yd) square of material.

8.21.3 Specimens.

8.21.3.1 Five specimens in each of the warp, machine or coarse, and filling, cross-machine or wale, directions shall be tested.

8.21.3.2 If the material is nonanisotropic, then 10 specimens shall be tested.

8.21.4 Procedure. Flame resistance testing shall be conducted in accordance with ASTM F 1358, *Standard Test Method for Resistance of Protective Clothing Materials to Flame Impingement.*

8.21.5 Report.

8.21.5.1 Afterflame times and burn distances results shall be recorded and reported for each specimen and as the average for each material direction.

8.21.5.2 The burning behavior observations of each specimen shall be recorded and reported.

8.21.6 Interpretation.

8.21.6.1 Failure of the material in any direction shall constitute failing performance.

8.21.6.2 Any specimen exhibiting melting as evidenced by dripping or flowing shall constitute failing performance.

Annex A Explanatory Material

Annex A is not a part of the requirements of this NFPA document but is included for informational purposes only. This annex contains explanatory material, numbered to correspond with the applicable text paragraphs.

A.1.1.1 The requirements of this standard were developed taking into consideration the needs of emergency response personnel for hazardous materials emergencies. This application can entail a variety of chemical, physical, and other hazards. Other protection needs should warrant a thorough review of the requirements in this standard, such as routine industrial operations to determine their applicability.

There are no requirements in this standard that address reuse or multiple wearings of liquid splash-protective ensembles. Users are cautioned that exposure of liquid splash-protective ensembles to chemicals could require disposal, particularly if the effectiveness of decontamination cannot be assessed.

At the time this standard was prepared, the characteristics of a dust or particulate flash fire have not been defined by the Technical Committee on Hazardous Materials Protective Clothing and Equipment and, therefore, the Committee has chosen not to assume that these exposures are similar to a chemical flash fire nor are the optional additional requirements for chemical flash fire protection adequate as minimum requirements for dust or particulate flash fire protection.

A.1.1.4 Organizations responsible for specialized hazardous materials response functions including ionizing radiation, biological, liquefied gas, or cryogenic liquid hazards, explosive atmospheres, or fire-fighting applications should use protective clothing and equipment specifically designed for protection for those operations.

A.1.1.5 See A.1.1.4.

A.1.1.6 See A.1.1.4.

A.1.1.7 See A.1.1.4.

A.1.2.1 This standard does not include any specific design or performance requirement or test method that demonstrates protection from particulates such as radiological particulates or particulate toxins.

A.1.2.2 The testing requirements in Chapter 7 of this standard are not intended to establish the limitations of the working environment for hazardous materials emergencies but are intended to establish material performance.

Users should be advised that if unusual conditions prevail, or if there are signs of abuse or mutilation of the protective ensemble or any element or component thereof, or if modifications or replacements are made or accessories are added without authorization of the protective ensemble element manufacturer, the margin of protection might be reduced.

Users should be advised that the protective properties in new liquid splash-protective ensembles, as required by this standard, can diminish as the product is worn and ages.

It is strongly recommended that purchasers of liquid splash-protective ensembles consider the following:

(1) Emergency response personnel must wear many items of protective clothing and equipment. Any interference by one item with another item's use might result in inefficient operations or unsafe situations.

Copyright National Fire Protection Association
Provided by IHS under license with NFPA
No reproduction or networking permitted without license from IHS
Not for Resale

(2) Different breathing apparatus, communications systems, cooling devices, and other protective equipment might not be equally accommodated by each liquid splash-protective suit.
(3) Specification of additional reinforcement in high-wear or load-bearing areas, such as the knees, elbows, shoulders, and back, can be necessary. Reinforcing materials should be the same as the garment material. Purchasers are cautioned that additional weight caused by excessive reinforcement could lead to fatigue or injury to the wearer and change or shorten the life of the garment.

A.1.3.8 Emergency response organizations are cautioned that accessories are not part of the certified product but could be attached to a certified product by a means not engineered, manufactured, or authorized by the certified product manufacturer.

Emergency response organizations are cautioned that if an accessory or its means of attachment causes the structural integrity of the certified product to be compromised, the certified product might not be compliant with the standard to which it was originally certified as compliant. Additionally, if an accessory or the accessory's means of attachment are not designed and manufactured from suitable materials for the hazardous environments of emergency incidents, the failure of the accessory, or its means of attachment, could cause injury to the emergency responder.

Because the aftermarket for accessories for certified product is so broad, emergency response organizations are advised to contact both the accessory manufacturer and the manufacturer of the certified product and verify that the accessory and its means of attachment are suitable for use in the intended emergency response environment. Emergency response organizations should seek and receive written documentation to validate the following information from the accessory manufacturer:

(1) Accessories for certified product, and the means of attachment, will not degrade the designed protection or performance of the certified product below the requirements of this standard to which it was designed, manufactured, tested, and certified.
(2) The accessory, when properly attached to the certified product, will not interfere with form, fit, or function of any of the certified product or with the form, fit, and function of any of the certified product's component parts.

Users are also cautioned that the means of attachment for accessories that fail to safely and securely attach the accessory to a certified product can allow the accessory to become inadvertently dislodged from the certified product and could cause a risk to emergency response personnel in the vicinity.

A.1.4 Metric units are used throughout this document with approximate U.S. units provided in parentheses. The metric units are the requirements.

A.3.2.1 Approved. The National Fire Protection Association does not approve, inspect, or certify any installations, procedures, equipment, or materials; nor does it approve or evaluate testing laboratories. In determining the acceptability of installations, procedures, equipment, or materials, the authority having jurisdiction may base acceptance on compliance with NFPA or other appropriate standards. In the absence of such standards, said authority may require evidence of proper installation, procedure, or use. The authority having jurisdiction may also refer to the listings or labeling practices of an organization that is concerned with product evaluations and is thus in a position to determine compliance with appropriate standards for the current production of listed items.

A.3.2.2 Authority Having Jurisdiction (AHJ). The phrase "authority having jurisdiction," or its acronym AHJ, is used in NFPA documents in a broad manner, since jurisdictions and approval agencies vary, as do their responsibilities. Where public safety is primary, the authority having jurisdiction may be a federal, state, local, or other regional department or individual such as a fire chief; fire marshal; chief of a fire prevention bureau, labor department, or health department; building official; electrical inspector; or others having statutory authority. For insurance purposes, an insurance inspection department, rating bureau, or other insurance company representative may be the authority having jurisdiction. In many circumstances, the property owner or his or her designated agent assumes the role of the authority having jurisdiction; at government installations, the commanding officer or departmental official may be the authority having jurisdiction.

A.3.2.4 Listed. The means for identifying listed equipment may vary for each organization concerned with product evaluation; some organizations do not recognize equipment as listed unless it is also labeled. The authority having jurisdiction should utilize the system employed by the listing organization to identify a listed product.

A.3.3.9 Chemical Flash Fire. The Technical Committee on Hazardous Materials Protective Clothing and Equipment realized that a policy of wearing protective clothing is needed that recognizes the significant threat to fire fighters who can be exposed to flash fires in either structural fire-fighting or hazardous materials environments. It is hoped that fire fighters utilize awareness training on burn injuries caused by the ignition of the environment. There is a distinct difference between chemical flash fires and flashovers occurring in structural fire-fighting environments.

Flashover is a phenomenon that requires heat and generates temperatures in the range of 650°C to 815°C (1200°F to 1500°F). A chemical flash fire requires an ignition source and a chemical atmosphere that contains a concentration above the lower explosive limit of the chemical. Chemical flash fires generate heat from 540°C to 1040°C (1000°F to 1900°F). A structural fire flashover as a rule is confined to a designated area with walls as a boundary. A chemical flash fire depends on the size of the gas or vapor cloud and when ignited, the flame front expands outward in the form of a fireball. The resulting effect of the fireball's energy with respect to radiant heat significantly enlarges the hazard areas around the gas released.

A.3.3.10 Chemical-Protection Layer. The chemical-protection layer is considered as "primary material" and can be configured as a separate layer or as a composite with other primary materials. The chemical-protection layer can depend on the other primary material to provide the physical protection.

A.3.3.14 Component(s). Components include items required for the design and construction of the product and are evaluated and tested individually, or are evaluated and tested as a part of the whole product.

A.3.3.16 Cryogenic Liquid. Examples of cryogenic liquids include helium, nitrogen, and oxygen. This is not an inclusive list of cryogenic liquids.

A.3.3.21 Ensemble Elements. The liquid splash-protective ensemble is comprised of garments, helmet, gloves, and footwear (or other elements per the specific ensemble).

Copyright National Fire Protection Association
Provided by IHS under license with NFPA
No reproduction or networking permitted without license from IHS
Not for Resale

A.3.3.23 External Fittings. Airline, cooling device, and communications system connections or pass-throughs, and glove and boot interface materials are examples of external fittings.

A.3.3.33 Hazardous Materials. Hazardous materials are any solid, particulate, liquid, gas, aerosol, or mixture thereof that can cause harm to the human body through respiration, ingestion, skin absorption, injection, or contact.

A.3.3.35 Ionizing Radiation. Ionizing radiation includes alpha particles, beta particles, x-rays, and gamma rays. Ionizing radiation derives its name from its ability to "ionize" atoms and molecules with which it interacts. In other words, ionizing particles and energy waves posses enough energy to literally knock apart the atomic structure of the material and break chemical bonds. This rearrangement of the atomic structure of a material results in a release of a great deal of energy in a very small area. When this occurs in living tissue, the tissue can be severely damaged or destroyed. Additionally, the atomic particles knocked loose by the radiation can themselves ionize other atoms, propagating the damage.

A.3.3.37 Liquefied Gas. Examples of liquefied gases include ammonia, 1,2-butadiene, chlorine, ethylene oxide, hydrogen chloride, liquefied petroleum gas, and methyl chloride. This is not an inclusive list of liquefied gases.

A.3.3.38 Liquid Splash-Protective Clothing. Liquid splash-protective clothing includes, but is not limited to, garments, gloves, and footwear.

A.3.3.39 Liquid Splash-Protective Ensemble. Liquid splash-protective ensemble elements include, but are not limited to, the garments, gloves, and footwear.

A.3.3.40 Liquid Splash-Protective Footwear. Liquid splash-protective footwear includes boots, or outer boots in conjunction with booties.

A.3.3.41 Liquid Splash-Protective Garment. Liquid splash-protective garments include coveralls, multipiece splash suits, encapsulating ensembles, and nonencapsulating ensembles.

A.3.3.50 Particulates. For the purpose of this standard, particulates do not include aerosols or suspended liquid droplets in air. Aerosols are considered liquids.

A.3.3.52 Product Label. The product label is not the certification organization's label, symbol, or identifying mark; however, the certification organization's label, symbol, or identifying mark can be attached to it or be part of the product label.

A.3.3.64 Vapor-Protective Ensemble. The vapor-protective ensemble elements include, but are not limited to, the suit, gloves, and footwear.

A.4.1.4 The compliance of liquid splash-protective ensembles in meeting this standard is determined by the NFPA battery of chemicals. Each liquid splash-protective ensemble, or element of a liquid splash-protective ensemble, meeting the requirements of this standard will have a list of chemicals or chemical mixtures associated with it.

Vapor-protective ensembles meeting the requirements of NFPA 1991, *Standard on Vapor-Protective Ensembles for Hazardous Materials Emergencies*, provide additional levels of protection not required for protective ensembles compliant with this standard.

A.4.1.7 The National Fire Protection Association (NFPA), from time to time, has received complaints that certain items of fire and emergency services protective clothing or protective equipment might be carrying labels falsely identifying them as compliant with an NFPA standard. The requirement for placing the certification organization's mark on or next to the product label is to help ensure that the purchaser can readily determine compliance of the respective product through independent third-party certification.

A.4.2.1 The certification organization should have a sufficient breadth of interest and activity so that the loss or award of a specific business contract would not be a determining factor in the financial well-being of the agency.

A.4.2.5 The contractual provisions covering a certification program should contain clauses advising the manufacturer that if requirements change, the product should be brought into compliance with the new requirements by a stated effective date through a compliance review program involving all currently listed products.

Without the clauses, certifiers would not be able to move quickly to protect their name, marks, or reputation. A product safety certification program would be deficient without these contractual provisions and the administrative means to back them up.

A.4.2.6 Investigative procedures are important elements of an effective and meaningful product safety certification program. A preliminary review should be carried out on products submitted to the agency before any major testing is undertaken.

A.4.2.7.1 For further information and guidance on recall programs, see 21 CFR 7, Subpart C.

A.4.2.9 Such inspections should include, in most instances, witnessing of production tests. With certain products the certification organization inspectors should select samples from the production line and submit them to the main laboratory for countercheck testing. With other products, it could be desirable to purchase samples in the open market for test purposes.

A.4.3.16 Manufacturers are not limited in their approaches for designing liquid splash-protective ensembles compliant with this standard. If the ensemble design uses combinations of materials or components to meet one part of the standard, then the same combinations must be assessed for all parts of the standard. For example, if a two-part visor is used such that the visor materials meet the chemical resistance requirement, the outer visor cannot be removed to meet the visor clarity requirement. The same configuration must be used for all performance requirements.

A.4.6.1 ISO 27, *Guidelines for corrective action to be taken by a certification body in the event of misuse of its mark of conformity*, is a component of accreditation of certification organizations specified in 4.1.4 and 4.2.3 of NFPA 1975, *Standard on Station/Work Uniforms for Fire and Emergency Services*. Those paragraphs contain a mandatory reference to ISO 65, *General requirements for bodies operating product certification systems*, in which ISO 27 is referenced.

A.4.6.2 By definition, a hazard might involve a condition that can be imminently dangerous to the end user. With this thought in mind, the investigation should be started immediately and completed in as timely a manner as is appropriate considering the particulars of the hazard being investigated.

A.4.6.11 The determination of the appropriate corrective action for the certification organization to initiate should take into consideration the severity of the product hazard and its potential

Copyright National Fire Protection Association
Provided by IHS under license with NFPA
No reproduction or networking permitted without license from IHS
Not for Resale

consequences to the safety and health of end users. The scope of testing and evaluation should consider, among other things, testing to the requirements of the standard to which the product was listed as compliant, the age of the product, the type of use and conditions to which the compliant product has been exposed, care and maintenance that has been provided, the use of expertise on technical matters outside the certification organization's area of competence, and product hazards caused by circumstances not anticipated by the requirements of the applicable standard. As a guideline for determining which is more appropriate, a safety alert or a product recall, the following product hazard characteristics are provided, which are based on 42 CFR 84, Subpart E, §84.41:

(1) *Critical:* A product hazard that judgment and experience indicate is likely to result in a condition immediately hazardous to life or health (IHLH) for individuals using or depending on the compliant product. If an IHLH condition occurs, the user will sustain, or will be *likely* to sustain, an injury of a severity that could result in loss of life, or result in significant bodily injury or loss of bodily function, either immediately or at some point in the future.
(2) *Major A:* A product hazard, other than *Critical*, that is likely to result in failure to the degree that the compliant product does not provide any protection or reduces protection, *and is not detectable to the user*. The phrase *reduces protection* means the failure of specific protective design(s) or feature(s) that results in degradation of protection in advance of reasonable life expectancy to the point that continued use of the product is *likely* to cause physical harm to the user, or where continued degradation could lead to IHLH conditions.
(3) *Major B:* A product hazard, other than *Critical* or *Major A*, that is likely to result in reduced protection and is detectable to the user. The phrase *reduces protection* means the failure of specific protective design(s) or feature(s) that results in degradation of protection in advance of reasonable life expectancy to the point that continued use of the product is *likely* to cause physical harm to the user, or where continued degradation could lead to IHLH conditions.
(4) *Minor:* A product hazard, other than *Critical*, *Major A*, or *Major B*, that is not likely to materially reduce the usability of the compliant product for its intended purpose, or a product hazard that is a departure from the established applicable standard and has little bearing on the effective use or operation of the compliant product for its intended purpose.

Where the facts are conclusive, based on characteristics of the hazard classified as indicated previously, the certification organization should consider initiating the following corrective actions with the authorized and responsible parties:

(1) *Critical* product hazard characteristics: Product recall
(2) *Major A* product hazard characteristics: Product recall or safety alert, depending on the nature of the specific product hazard
(3) *Major B* product hazard characteristics: Safety alert or no action, depending on the nature of the specific product hazard
(4) *Minor* product hazard characteristic: No action

A.4.6.13 Reports, proposals, and proposed TIAs should be addressed to the technical committee that is responsible for the applicable standard and be sent in care of Standards Administration, NFPA, 1 Batterymarch Park, Quincy, MA 02169-7471.

A.5.1.1.1 Purchasers might wish to include a requirement in the purchase specifications for an additional label that includes certain information, such as the date of manufacture, manufacturer's name, and garment identification number, to be located in a protected location on the garment so as to reduce the chance of label degradation and as a backup source of information to aid in garment tracking or during an investigation.

A.5.1.1.5 See A.4.1.7.

A.5.2 Purchasers and users should be aware that no reliable, nondestructive methods exist to determine the level of contamination for exposed vapor-protective ensembles or their materials. Therefore, users will not be able to determine how effective decontamination methods are in removing chemical contamination from the vapor-protective suit. Vapor-protective ensembles that have received a significant exposure to a chemical or chemical mixture in the estimation of the responsible supervisor should be disposed of.

A.5.3.1 Purchasers should use the technical data package to compare suit performance data when purchasing liquid splash-protective garments. The purchaser should determine the relative ranking of performance data to aid in this selection process.

A.5.3.2 Purchasers should request that all documentation and performance data be provided in a format that will allow easy comparison of products to aid selection.

A.5.3.4 Manufacturers should determine the size range of their ensembles by matching human dimensions with available suit sizes. These determinations should account for other clothing and equipment to be worn by the wearer as recommended by the manufacturer. Assessment of acceptable fit should be determined by using ASTM F 1154, *Standard Practices for Qualitatively Evaluating the Comfort, Fit, Function, and Integrity of Chemical-Protective Suit Ensembles.*

Annex B Informational References

B.1 Referenced Publications. The following documents or portions thereof are referenced within this standard for informational purposes only and are thus not part of the requirements of this document unless also listed in Chapter 2.

B.1.1 NFPA Publication. National Fire Protection Association, 1 Batterymarch Park, Quincy, MA 02169-7471.

NFPA 1975, *Standard on Station/Work Uniforms for Fire and Emergency Services*, 2004 edition.

NFPA 1981, *Standard on Open-Circuit Self-Contained Breathing Apparatus for Fire and Emergency Services*, 2002 edition.

NFPA 1991, *Standard on Vapor-Protective Ensembles for Hazardous Materials Emergencies*, 2005 edition.

B.1.2 Other Publications.

B.1.2.1 ASTM Publication. American Society for Testing and Materials, 100 Barr Harbor Drive, West Conshohocken, PA 19428-2959.

ASTM F 1154, *Standard Practices for Qualitatively Evaluating the Comfort, Fit, Function, and Integrity of Chemical-Protective Suit Ensembles*, 1998.

Copyright National Fire Protection Association
Provided by IHS under license with NFPA
No reproduction or networking permitted without license from IHS
Not for Resale

B.1.2.2 ISO Publications. International Organization for Standardization, 1, rue de Varembé, Case postale 56, Geneve 20, Switzerland.

ISO 27, *Guidelines for corrective action to be taken by a certification body in the event of misuse of its mark of conformity*, 1983.

ISO 65, *General requirements for bodies operating product certification systems*, 1996.

B.1.2.3 U.S. Government Publications. U.S. Government Printing Office, Washington, DC 20402.

Title 21, Code of Federal Regulations, Part 7, Subpart C.

Title 42, Code of Federal Regulations, Part 84, Subpart E §84.41.

B.1.2.4 Other Publication. *Merriam-Webster's Collegiate Dictionary*, 11th edition, Merriam-Webster, Inc., Springfield, MA, 2003.

B.2 Informational References. (Reserved)

B.3 References for Extracts. (Reserved)

Copyright National Fire Protection Association
Provided by IHS under license with NFPA
No reproduction or networking permitted without license from IHS
Not for Resale

Index

© 2005 National Fire Protection Association. All Rights Reserved.

The copyright in this index is separate and distinct from the copyright in the document that it indexes. The licensing provisions set forth for the document are not applicable to this index. This index may not be reproduced in whole or in part by any means without the express written permission of NFPA.

-A-

Abrasion, chemical penetration resistance after
Performance requirements
Footwear uppers 7.3.2
Garment material 7.1.3
Tests ..... 8.4.8 to 8.4.10
Abrasion procedure 8.1.4
Abrasion resistance, footwear
Performance requirements 7.3.7
Tests 8.15
Accessories 1.1.9, 1.3.8, A.1.3.8
Afterflame time (definition) 3.3.1
Application of standard 1.3, A.1.3.8
Approved (definition) 3.2.1, A.3.2.1
Authority having jurisdiction (definition) 3.2.2, A.3.2.2

-B-

Bending resistance, ladder shanks
Performance requirements 7.3.8
Test 8.17
Biological agents 1.1.5, 1.1.7
Definition 3.3.2
Booties
Definition 3.3.4
Design requirements
Coverage requirements 6.1.2, 6.3.5
Encapsulating ensemble 6.5.5.1, 6.5.5.2
Nonencapsulating ensemble 6.4.4.1
Boots .....*see* Liquid splash-protective footwear; Outer boots
Breaking strength
Performance requirements
Garment closure assemblies 7.1.9.2
Seams 7.1.8.2
Test 8.8
Burst strength
Performance requirements
Garment material 7.1.4
Visor 7.1.7.2
Test 8.5

-C-

Carcinogens 4.1.11
Care (definition) 3.3.5
Certification/certified ..... Chap. 4; *see also* Labeled
Additional standards 1.1.10
Annual verification of product compliance 4.3.3, 4.4
Definition 3.3.6
Ensembles using prior standards ..... 4.1.8 to 4.1.10
Manufacturer's quality assurance program 4.5
Material and component descriptions 5.3.5.1
Program 4.2
Sample testing 4.2.6, 4.3.3, 4.3.4, A.4.2.6
User information 5.2, A.5.2
Certification organization ..... 4.1.3, 4.1.7 to 4.1.10, 4.2
Contract with manufacturers 4.2.5, A.4.2.5
Definition 3.3.7
Review of technical data package by ..... 4.3.5 to 4.3.8
Safety alerts and product recalls ..... 4.7.3, 4.8.2(2)
Testing program .....*see* Testing and inspection
Chemical and biological terrorism incidents 1.1.5
Definition 3.3.8
Chemical flash fire (definition) 3.3.9, A.3.3.9
Chemical flash fire protection ..... 1.2.1.1, 4.4.3.2(3)
Design requirements 6.6
Performance requirements 7.6
Tests
Flammability resistance 8.21
Flash test, overall ensemble 8.19
Thermal protective performance (TPP) 8.20
Chemical hazards 4.1.11
Chemical penetration resistance
Performance requirements
Garment closure assemblies 7.1.9.1
Garment materials 7.1.3
Gloves 7.2.2
Seams 7.1.8.1
Visor 7.1.7.1
Test 8.4
Chemical-protection layer (definition) 3.3.10, A.3.3.10
Chemical-protective material (definition) 3.3.11
Chemical warfare agents 1.1.5
Closure assemblies .....*see* Garment closure assemblies
Closures .....*see* Garment closures
Cold temperature performance
Performance requirements
Garment material 7.1.6
Gloves 7.2.5
Visor 7.1.7.4
Test 1 ..... 8.7
Test 2 ..... 8.9
Complaints, manufacturers' investigation of 4.7
Compliance/compliant .....*see also* Labeled
Definition 3.3.13
2000 edition, compliance with 4.1.9, 4.1.10
Hazards involving compliant product 4.6
Product labels, compliance statements on ... 5.1.1.9, 5.1.2 to 5.1.4
Quality assurance program 4.2.7, A.4.2.7.1
Recertification of compliant clothing, annual 4.4
Components
Definition 3.3.14, A.3.3.14
Descriptions 5.3.5
Composite (definition) 3.3.15
Compression resistance .....*see* Impact and compression resistance, footwear toe
Coverage requirements 6.1.1, 6.1.2
Booties 6.1.2
Encapsulating ensemble 6.5.1
Garments 6.1.1
Nonencapsulating ensemble 6.4.1
Cryogenic liquid (definition) 3.3.16, A.3.3.16
Cut resistance
Performance requirements
Footwear uppers 7.3.3
Gloves 7.2.3
Test 8.11

-D-

Decontamination A.1.1.1
Definitions ..... Chap. 3
Design requirements ..... Chap. 6
Ensemble 6.1

--`,,```,,,````-`-`,,`,,`,`,,`---

Copyright National Fire Protection Association
Provided by IHS under license with NFPA
No reproduction or networking permitted without license from IHS

Not for Resale

External fittings 6.1.4, 6.2.6, 6.3.8
Footwear 6.3
Gloves 6.2
Donning and doffing procedures
Gloves 6.2.5
Instructions ..... 5.2.3(4)
Dry environment conditioning 8.1.8
Dust flash fires A.1.1.1

-E-

Elements .....*see* Ensemble elements
Emergency response personnel (definition) 3.3.18
Encapsulating (definition) 3.3.19
Encapsulating ensemble
Compliance statements 5.1.6
Coverage requirements 6.5.1
Design requirements 6.5
Performance requirements 7.5, 7.7
Tests
Function and integrity 8.3.1.1, 8.3.7
Liquidtight integrity 8.2.9
Ensemble .....*see* Liquid splash-protective ensemble
Ensemble elements
Definition 3.3.21, A.3.3.21
Product labels 5.1.1.4
Exhaust valves ..... 5.3.5.2(7)
Definition 3.3.22
Explosive atmosphere 1.1.7
Definition 3.3.24
External fittings
Definition 3.3.23, A.3.3.23
Design requirements 6.1.4, 6.2.6, 6.3.8
Manufacturer's description ..... 5.3.5.2(8), 5.3.5.2(9)

-F-

Faceshield .....*see* Visor
Flammability resistance
Performance requirements 7.6.3
Test 8.21
Flammable or explosive atmospheres 1.1.7
Definition 3.3.24
Flash fires
Chemical .....*see* Chemical flash fire
Dust or particulate A.1.1.1
Flexing, chemical penetration resistance after
Performance requirements
Footwear uppers 7.3.2
Garment material 7.1.3
Gloves 7.2.2
Test ..... 8.4.8 to 8.4.10
Flexural fatigue procedure 8.1.3, 8.1.5, 8.1.6
Follow-up programs 4.2.9
Definition 3.3.25
Footwear .....*see* Liquid splash-protective footwear; Outer boots
Footwear soles
Performance requirements 7.3.6, 7.3.7, 7.3.9
Tests 8.14, 8.15, 8.18
Footwear uppers
Definition 3.3.27
Performance requirements ..... 7.3.2 to 7.3.4
Tests 8.11, 8.12, 8.20

-G-

Garment .....*see* Liquid splash-protective garment
Garment closure assemblies
Breaking strength
Performance requirements 7.1.9.2
Test 8.8
Chemical penetration resistance
Performance requirements 7.1.9
Test 8.4
Definition 3.3.30
Manufacturer's description ..... 5.3.5.4(4)
Sample fatigue procedure 8.1.7
Garment closures
Definition 3.3.29
Lubricants ..... 5.2.3(1)(e)
Manufacturer's description ..... 5.3.5.2(5), 5.3.5.4(4), 5.3.5.5(5)
Performance requirements 7.1.2
Garment materials .....*see also* Primary suit materials
Burst strength 7.1.4, 8.5
Chemical penetration resistance 7.1.3, 8.4.8
Cold temperature performance 7.1.6, 8.7, 8.9
Definition 3.3.31
Flammability resistance 7.6.3, 8.21
Manufacturer's description ..... 5.3.5, 5.3.5.2(1), 5.3.5.5
Puncture propagation tear resistance 7.1.5, 8.6
Recertification 4.4.3.3
Sample preparation procedure
Abrasion procedure 8.1.4
Dry environment conditioning 8.1.8
Flexural fatigue procedure 8.1.3
Thermal protective performance (TPP) 8.20
Gloves .....*see* Liquid splash-protective gloves

-H-

Hazardous materials (definition) 3.3.33, A.3.3.33
Hazardous materials emergencies 1.2.1
Definition 3.3.34
Head protection ..... 5.3.5.2(11); *see also* Visor
Hood .....*see also* Visor
Design requirements 6.5.3
Performance requirements 7.1.2.1, 7.1.2.2

-I-

Impact and compression resistance, footwear toe
Performance requirements 7.3.5
Test 8.16
Instructions 5.2.1
Ionizing radiation (definition) 3.3.35, A.3.3.35
ISO registration, for manufacturers 4.5.3, 4.5.5, 4.5.6, 4.6.1, A.4.6.1

-L-

Labeled .....*see also* Product labels
Certification requirements 4.1.2, 4.1.5, 4.1.10
Definition 3.2.3
2000 edition of standard, elements labeled to 4.1.9, 4.1.10
Ladder shanks
Bending resistance
Performance requirements 7.3.8
Test 8.17
Definition 3.3.36
Liquefied gas (definition) 3.3.37, A.3.3.37
Liquid penetration .....*see* Liquidtight integrity
Liquid splash-protective clothing (definition) 3.3.38, A.3.3.38
Liquid splash-protective ensemble .....*see also* Chemical flash fire protection; Encapsulating ensemble; Liquid splash-protective garment; Nonencapsulating ensemble
Definition 3.3.39, A.3.3.39
Design requirements 6.1
Ensembles using prior standards ..... 4.1.8 to 4.1.10
Product labels 5.1.1.4
Tests
Flash test 8.19
Overall ensemble function and integrity test .... 4.4.3.2(2), 8.3
Liquid splash-protective footwear .....*see also* Footwear soles; Footwear uppers; Outer boots
Compliance statements 5.1.4
Definition 3.3.40, A.3.3.40

Copyright National Fire Protection Association
Provided by IHS under license with NFPA
No reproduction or networking permitted without license from IHS
Not for Resale

Design requirements 6.3
Encapsulating ensemble 6.5.5
Nonencapsulating ensemble 6.4.4
Labeling and listing 5.1.1.3
Manufacturer's description of ..... 5.3.5.2(4), 5.3.5.2(10)
Performance requirements 7.3
Chemical flash fire escape protection 7.7.2
Chemical flash fire protection 7.6.2, 7.6.3
Encapsulating protective ensemble 7.5.4
Nonencapsulating protective ensemble 7.4.4
Recertification 4.4.3.3
Sample flexural fatigue procedure 8.1.6
Tests
Bending resistance test 8.17
Chemical penetration resistance 8.4.10
Flammability resistance 8.21
Flash test 8.19
Impact and compression 8.16
Liquidtight integrity 8.10
Liquid splash-protective garment
Available sizes 6.1.3
Compliance statements 5.1.2
Coverage requirements 6.1.1
Definition 3.3.41, A.3.3.41
Design requirements 6.1
Encapsulating ensemble 6.5.2
Nonencapsulating ensemble 6.4.2
Labels 5.1.1.1, A.5.1.1.1
Materials and component descriptions 5.3.5
Performance requirements 7.1
Chemical flash fire protection 7.6
Encapsulating protective ensemble 7.5.2
Nonencapsulating protective ensemble 7.4.2
Tests
Flash test 8.19
Function and integrity 8.3
Liquid splash-protective gloves
Compliance statements 5.1.3
Definition 3.3.42
Design requirements 6.2
Encapsulating ensemble 6.5.4
Nonencapsulating ensemble 6.4.3
Labeling and listing 5.1.1.2
Manufacturer's description ..... 5.3.5.2(3), 5.3.5.2(10), 5.3.5.4(2), 5.3.5.4(3), 5.3.5.5(3), 5.3.5.5(4)
Performance requirements 7.2
Chemical flash fire escape protection 7.7.2
Chemical flash fire protection 7.6.2, 7.6.3
Encapsulating protective ensemble 7.5.3
Nonencapsulating protective ensemble 7.4.3
Recertification 4.4.3.3
Sample preparation procedures
Dry environment conditioning 8.1.8
Flexural fatigue procedure 8.1.5
Tests
Chemical penetration resistance 8.4.9, 8.4.11
Cold temperature performance 8.7, 8.9
Cut resistance 8.11
Dexterity 8.13
Flammability resistance 8.21
Flash test 8.19
Liquidtight integrity 8.10
Puncture propagation tear resistance 8.6
Puncture resistance test 8.12
Thermal protective performance (TPP) 8.20
Liquidtight integrity ..... 4.4.3.2(1); *see also* Chemical penetration resistance
Performance requirements 7.1.1, 7.1.2
Encapsulating protective ensemble 7.5.1
Footwear 7.3.1
Gloves 7.2.1
Nonencapsulating protective ensemble 7.4.1
Test 1 ..... 8.2
Test 2 ..... 8.10
Listed 4.1.5
Definition 3.2.4, A.3.2.4

-M-

Maintenance
Definition 3.3.43
User information on ..... 5.2.3(6)
Manufacturers
Contract with certification organization 4.2.5, A.4.2.5
Definition 3.3.44
Investigation of complaints and returns 4.7
ISO registration 4.5.3, 4.5.5, 4.5.6, 4.6.1, A.4.6.1
Materials and component descriptions 5.3.5.2
Product label, information on 5.1.1.10
Quality assurance program 4.2.7, 4.5, A.4.2.7.1
Recertification 4.4.2, 4.4.4
Technical data provided by ..... *see* Technical data package
Testing program requirements 4.3.4
User information provided by 5.2, A.5.2
Materials and component descriptions ..... 5.3.5; *see also* Garment materials; Primary suit materials; Visor
Measurement, units of 1.4, A.1.4
Model (definition) 3.3.45
Modifications 4.3.17, 4.4.1.1, A.4.3.17

-N-

Nonencapsulating (definition) 3.3.46
Nonencapsulating ensemble
Compliance statements 5.1.5
Coverage requirements 6.4.1
Design requirements 6.4
Performance requirements 7.4
Tests
Function and integrity 8.3.1.1, 8.3.7
Liquidtight integrity 8.2.8.1

-O-

Outer boots
Definition 3.3.47
Manufacturer's description ..... 5.3.5.2(10), 5.3.5.5(6)
Outer garment
Definition 3.3.48
Manufacturer's description ..... 5.3.5.2(10), 5.3.5.4(5), 5.3.5.5(6)
Outer gloves
Definition 3.3.49
Manufacturer's description ..... 5.3.5.2(10), 5.3.5.5(6)

-P-

Particulates
Definition 3.3.50, A.3.3.50
Flash fires A.1.1.1
Performance requirements ..... Chap. 7
Chemical flash fire protection 7.6
Encapsulating ensemble 7.5, 7.7
Footwear 7.3
Footwear uppers ..... 7.3.2 to 7.3.4
Garment closure assemblies 7.1.9
Gloves 7.2
Nonencapsulating protective ensemble 7.4
Seams 7.1.8
Visor 7.1.7
Ports ..... *see* Exhaust valves
Primary suit materials ..... *see also* Garment materials
Definition 3.3.51
Product labels ..... 4.1.6, 5.1, A.4.1.7, A.5.1.1.1; *see also* Labeled
Definition 3.3.52, A.3.3.52
2000 edition of standard, elements labeled to 4.1.9, 4.1.10

Copyright National Fire Protection Association
Provided by IHS under license with NFPA
No reproduction or networking permitted without license from IHS
Not for Resale

Product recall ..... *see* Recall
Protective clothing ..... *see* Liquid splash-protective clothing
Protective ensemble ..... *see* Liquid splash-protective ensemble
Protective footwear ..... *see* Liquid splash-protective footwear
Protective garment ..... *see* Liquid splash-protective garment
Protective gloves ..... *see* Liquid splash-protective gloves
Puncture propagation tear resistance
Performance requirements
Garment material 7.1.5
Visor 7.1.7.3
Test 8.6
Puncture resistance
Performance requirements
Footwear soles and heels 7.3.6
Footwear uppers 7.3.4
Gloves 7.2.4
Test 1 ..... 8.12
Test 2 ..... 8.14
Purchase specifications A.1.2.2
Purpose of standard 1.2, A.1.2.1, A.1.2.2

-Q-

Quality assurance program 4.5

-R-

Radionuclide (definition) 3.3.58
Recall system 4.2.7.1, 4.7.3, 4.8, A.4.2.7.1
Definition 3.3.59
Recertification, annual 4.3.3, 4.4
References ..... Chap. 2, Annex B
Respiratory equipment (definition) 3.3.60
Returns, manufacturers' investigation of 4.7
Room temperature conditioning procedure 8.1.2

-S-

Safety alerts 4.7.3, 4.8
Scope of standard 1.1, A.1.1.1, A.1.1.4
Seams 5.3.5.5
Breaking strength
Performance requirements 7.1.8.2
Tests 8.8
Chemical penetration resistance
Performance requirements 7.1.8.1
Tests 8.4.11
Definition 3.3.61
Manufacturer's description ..... 5.3.5.2(6)
Shall (definition) 3.2.5
Should (definition) 3.2.6
Sizes
Available
Footwear 6.3.7
Garments 6.1.3
Gloves 6.2.4
Descriptions of 5.3.4, A.5.3.4
Slip resistance, footwear sole
Performance requirements 7.3.9
Test 8.18
Standard (definition) 3.2.7
Storage life 5.2.4
Definition 3.3.62
Suit closure (definition) ..... 3.3.63; *see also* Garment closures

-T-

Technical data package 5.3, A.5.3
Materials and component descriptions 5.3.5
Review by certification organization ..... 4.3.5 to 4.3.8
Testing and inspection ...*see also* Performance requirements; specific tests, e.g. Cut resistance, Test and/or specific items, e.g. Liquid splash-protective gloves, tests
Annual verification of compliance 4.4.1
For certification 4.2.6, 4.3, A.4.2.6, A.4.3.17
Changes in design, construction, or material 4.3.17, A.4.3.17
Follow-up 4.2.9
Manufacturers 4.3.3
Methods ..... Chap. 8
Recordkeeping 4.4.4
Sample preparation procedures 8.1
Thermal protective performance (TPP)
Performance requirements 7.6.2
Test 8.20

-U-

Units of measurement 1.4, A.1.4
User information 5.2, A.5.2

-V-

Vapor-protective ensemble (definition) 3.3.64, A.3.3.64
Visor
Antifog agents and procedures ..... 5.2.3(1)(f)
Design requirements 6.5.3
Performance requirements 7.1.2.2, 7.1.7, 7.1.8, 7.7.1
Recertification 4.4.3.3
Tests
Burst strength 8.5
Chemical penetration resistance 8.4.7
Puncture propagation tear resistance 8.6
Visor materials
Definition 3.3.65
Manufacturer's description ..... 5.3.5.2(2), 5.3.5.4(1), 5.3.5.5(2)
Performance requirements ..... 7.1.7.1 to 7.1.7.4, 7.6.3
Tests, flammability resistance 8.21

-W-

Water penetration ..... *see* Liquidtight integrity

-Z-

Zippers ..... *see* Garment closures

Copyright National Fire Protection Association
Provided by IHS under license with NFPA
No reproduction or networking permitted without license from IHS
Not for Resale

Sequence of Events Leading to Publication of an NFPA Committee Document

Call goes out for proposals to amend existing document or for recommendations on new document.

▼

Committee meets to act on proposals, to develop its own proposals, and to prepare its report.

▼

Committee votes on proposals by letter ballot. If two-thirds approve, report goes forward. Lacking two-thirds approval, report returns to committee.

▼

Report — *Report on Proposals* (ROP) — is published for public review and comment.

▼

Committee meets to act on each public comment received.

▼

Committee votes on comments by letter ballot. If two-thirds approve, supplementary report goes forward. Lacking two-thirds approval, supplementary report returns to committee.

▼

Supplementary report — *Report on Comments* (ROC) — is published for public review.

▼

NFPA membership meets (Annual or Fall Meeting) and acts on committee report (ROP or ROC).

▼

Committee votes on any amendments to report approved at NFPA Annual or Fall Meeting.

▼

Appeals to Standards Council on Association action must be filed within 20 days of the NFPA Annual or Fall Meeting.

▼

Standards Council decides, based on all evidence, whether or not to issue standard or to take other action, including upholding any appeals.

Committee Membership Classifications

The following classifications apply to Technical Committee members and represent their principal interest in the activity of the committee.

M *Manufacturer:* A representative of a maker or marketer of a product, assembly, or system, or portion thereof, that is affected by the standard.

U *User:* A representative of an entity that is subject to the provisions of the standard or that voluntarily uses the standard.

I/M *Installer/Maintainer:* A representative of an entity that is in the business of installing or maintaining a product, assembly, or system affected by the standard.

L *Labor:* A labor representative or employee concerned with safety in the workplace.

R/T *Applied Research/Testing Laboratory:* A representative of an independent testing laboratory or independent applied research organization that promulgates and/or enforces standards.

E *Enforcing Authority:* A representative of an agency or an organization that promulgates and/or enforces standards.

I *Insurance:* A representative of an insurance company, broker, agent, bureau, or inspection agency.

C *Consumer:* A person who is, or represents, the ultimate purchaser of a product, system, or service affected by the standard, but who is not included in the *User* classification.

SE *Special Expert:* A person not representing any of the previous classifications, but who has a special expertise in the scope of the standard or portion thereof.

NOTES:

1. "Standard" connotes code, standard, recommended practice, or guide.
2. A representative includes an employee.
3. While these classifications will be used by the Standards Council to achieve a balance for Technical Committees, the Standards Council may determine that new classifications of members or unique interests need representation in order to foster the best possible committee deliberations on any project. In this connection, the Standards Council may make such appointments as it seems appropriate in the public interest, such as the classification of "Utilities" in the National Electrical Code Committee.
4. Representatives of subsidiaries of any group are generally considered to have the same classification as the parent organization.

Copyright National Fire Protection Association
Provided by IHS under license with NFPA
No reproduction or networking permitted without license from IHS
Not for Resale

NFPA Technical Committee Document Proposal Form

Note: All proposals must be received by 5:00 p.m. EST/EDST on the published proposal closing date.

For further information on the standards-making process, please contact Codes and Standards Administration at 617-984-7249. For technical assistance, please call NFPA at 617-770-3000.

FOR OFFICE USE ONLY
Log #: _____
Date Rec'd: _____

Please indicate in which format you wish to receive your ROP/ROC: ☐ **CD ROM** ☐ **paper** ☐ **download**
(Note: In choosing the download option you intend to view the ROP/ROC from our Website. No copy will be sent to you.)

Date 12/18/02 **Name** John B. Smith **Telephone** 617-555-1212
Company _____
Address 9 Seattle St. **City** Seattle **State** WA **Zip** 02255
Please indicate organization represented (if any) Fire Marshals Assn. of North America

1. **a) NFPA Document Title** National Fire Alarm Code
   b) NFPA No. & Edition NFPA 72, 2002 ed. **c) Section/Paragraph** 4.4.7.1.1

2. **Proposal Recommends:** *(check one)* ☐ **new text** ☐ **revised text** ☒ **deleted text**

3. **Proposal.** *(Include proposed new or revised wording, or identification of wording to be deleted.)* Note: Proposed text should be in legislative format, that is, use underscore to denote wording to be inserted (inserted wording) and strike-through to denote wording to be deleted (~~deleted wording~~). Delete exception.

4. **Statement of Problem and Substantiation for Proposal.** Note: State the problem that will be resolved by your recommendation. Give the specific reason for your proposal including copies of tests, research papers, fire experience, etc. If more than 200 words, it may be abstracted for publication. A properly installed and maintained system should be free of ground faults. The occurrence of one or more ground faults should be required to cause a "trouble" signal because it indicates a condition that could contribute to future malfunction of the system. Ground fault protection has been widely available on these systems for years and its cost is negligible. Requiring it on all systems will promote better installations, maintenance and reliability.

5. ☒ **This Proposal is Original Material.** Note: Original material is considered to be the submitter's own idea based on or as a result of his/her own experience, thought, or research and, to the best of his/her knowledge, is not copied from another source.

   ☐ **This Proposal is Not Original Material; Its Source** ***(if known)*** **is as Follows:** _____

Sample

I hereby grant the NFPA all and full rights in copyright to this proposal, and I understand that I acquire no rights in any publication of NFPA in which this proposal in this or another similar or analogous form is used.

Signature ***(Required)*** John B. Smith

PLEASE USE SEPARATE FORM FOR EACH PROPOSAL • NFPA FAX (617) 770-3500

Mail to: Secretary, Standards Council • NFPA • 1 Batterymarch Park • PO Box 9101 • Quincy, MA 02269-9101

Copyright National Fire Protection Association
Provided by IHS under license with NFPA
No reproduction or networking permitted without license from IHS
Not for Resale

NFPA Technical Committee Document Proposal Form

Note: All proposals must be received by 5:00 p.m. EST/EDST on the published proposal closing date.

For further information on the standards-making process, please contact Codes and Standards Administration at 617-984-7249. For technical assistance, please call NFPA at 617-770-3000.

FOR OFFICE USE ONLY
Log #: _____
Date Rec'd: _____

Please indicate in which format you wish to receive your ROP/ROC: ☐ **CD ROM** ☐ **paper** ☐ **download**
(Note: In choosing the download option you intend to view the ROP/ROC from our Website. No copy will be sent to you.)

Date _____ **Name** _____ **Telephone** _____
Company _____
Address _____ **City** _____ **State** _____ **Zip** _____
Please indicate organization represented (if any) _____

1. **a) NFPA Document Title** _____
   b) NFPA No. & Edition _____ **c) Section/Paragraph** _____
2. **Proposal Recommends:** *(check one)* ☐ **new text** ☐ **revised text** ☐ **deleted text**
3. **Proposal.** *(Include proposed new or revised wording, or identification of wording to be deleted.)* Note: Proposed text should be in legislative format, that is, use underscore to denote wording to be inserted (inserted wording) and strike-through to denote wording to be deleted (~~deleted wording~~). _____
4. **Statement of Problem and Substantiation for Proposal.** Note: State the problem that will be resolved by your recommendation. Give the specific reason for your proposal including copies of tests, research papers, fire experience, etc. If more than 200 words, it may be abstracted for publication. _____
5. ☐ **This Proposal is Original Material.** Note: Original material is considered to be the submitter's own idea based on or as a result of his/her own experience, thought, or research and, to the best of his/her knowledge, is not copied from another source.

   ☐ **This Proposal is Not Original Material; Its Source *(if known)* is as Follows:** _____

I hereby grant the NFPA all and full rights in copyright to this proposal, and I understand that I acquire no rights in any publication of NFPA in which this proposal in this or another similar or analogous form is used.

Signature *(Required)* _____

PLEASE USE SEPARATE FORM FOR EACH PROPOSAL • NFPA FAX (617) 770-3500

Mail to: Secretary, Standards Council • NFPA • 1 Batterymarch Park • PO Box 9101 • Quincy, MA 02269-9101

Copyright National Fire Protection Association
Provided by IHS under license with NFPA
No reproduction or networking permitted without license from IHS
Not for Resale