NFPA 1991

Standard on Vapor-Protective Ensembles for Hazardous Materials Emergencies

2005 Edition

NFPA, 1 Batterymarch Park, Quincy, MA 02169-7471
An International Codes and Standards Organization

Copyright National Fire Protection Association
Provided by IHS under license with NFPA
No reproduction or networking permitted without license from IHS

Not for Resale

IMPORTANT NOTICES AND DISCLAIMERS CONCERNING NFPA DOCUMENTS

NOTICE AND DISCLAIMER OF LIABILITY CONCERNING THE USE OF NFPA DOCUMENTS

NFPA codes, standards, recommended practices, and guides, of which the document contained herein is one, are developed through a consensus standards development process approved by the American National Standards Institute. This process brings together volunteers representing varied viewpoints and interests to achieve consensus on fire and other safety issues. While the NFPA administers the process and establishes rules to promote fairness in the development of consensus, it does not independently test, evaluate, or verify the accuracy of any information or the soundness of any judgments contained in its codes and standards.

The NFPA disclaims liability for any personal injury, property or other damages of any nature whatsoever, whether special, indirect, consequential or compensatory, directly or indirectly resulting from the publication, use of, or reliance on this document. The NFPA also makes no guaranty or warranty as to the accuracy or completeness of any information published herein.

In issuing and making this document available, the NFPA is not undertaking to render professional or other services for or on behalf of any person or entity. Nor is the NFPA undertaking to perform any duty owed by any person or entity to someone else. Anyone using this document should rely on his or her own independent judgment or, as appropriate, seek the advice of a competent professional in determining the exercise of reasonable care in any given circumstances.

The NFPA has no power, nor does it undertake, to police or enforce compliance with the contents of this document. Nor does the NFPA list, certify, test or inspect products, designs, or installations for compliance with this document. Any certification or other statement of compliance with the requirements of this document shall not be attributable to the NFPA and is solely the responsibility of the certifier or maker of the statement.

Copyright National Fire Protection Association
Provided by IHS under license with NFPA
No reproduction or networking permitted without license from IHS
Not for Resale

ADDITIONAL NOTICES AND DISCLAIMERS

Updating of NFPA Documents

Users of NFPA codes, standards, recommended practices, and guides should be aware that these documents may be superseded at any time by the issuance of new editions or may be amended from time to time through the issuance of Tentative Interim Amendments. An official NFPA document at any point in time consists of the current edition of the document together with any Tentative Interim Amendments and any Errata then in effect. In order to determine whether a given document is the current edition and whether it has been amended through the issuance of Tentative Interim Amendments or corrected through the issuance of Errata, consult appropriate NFPA publications such as the National Fire Codes® Subscription Service, visit the NFPA website at www.nfpa.org, or contact the NFPA at the address listed below.

Interpretations of NFPA Documents

A statement, written or oral, that is not processed in accordance with Section 6 of the Regulations Governing Committee Projects shall not be considered the official position of NFPA or any of its Committees and shall not be considered to be, nor be relied upon as, a Formal Interpretation.

Patents

The NFPA does not take any position with respect to the validity of any patent rights asserted in connection with any items which are mentioned in or are the subject of NFPA codes, standards, recommended practices, and guides, and the NFPA disclaims liability for the infringement of any patent resulting from the use of or reliance on these documents. Users of these documents are expressly advised that determination of the validity of any such patent rights, and the risk of infringement of such rights, is entirely their own responsibility.

NFPA adheres to applicable policies of the American National Standards Institute with respect to patents. For further information contact the NFPA at the address listed below.

Law and Regulations

Users of these documents should consult applicable federal, state, and local laws and regulations. NFPA does not, by the publication of its codes, standards, recommended practices, and guides, intend to urge action that is not in compliance with applicable laws, and these documents may not be construed as doing so.

Copyrights

This document is copyrighted by the NFPA. It is made available for a wide variety of both public and private uses. These include both use, by reference, in laws and regulations, and use in private self-regulation, standardization, and the promotion of safe practices and methods. By making this document available for use and adoption by public authorities and private users, the NFPA does not waive any rights in copyright to this document.

Use of NFPA documents for regulatory purposes should be accomplished through adoption by reference. The term "adoption by reference" means the citing of title, edition, and publishing information only. Any deletions, additions, and changes desired by the adopting authority should be noted separately in the adopting instrument. In order to assist NFPA in following the uses made of its documents, adopting authorities are requested to notify the NFPA (Attention: Secretary, Standards Council) in writing of such use. For technical assistance and questions concerning adoption of NFPA documents, contact NFPA at the address below.

For Further Information

All questions or other communications relating to NFPA codes, standards, recommended practices, and guides and all requests for information on NFPA procedures governing its codes and standards development process, including information on the procedures for requesting Formal Interpretations, for proposing Tentative Interim Amendments, and for proposing revisions to NFPA documents during regular revision cycles, should be sent to NFPA headquarters, addressed to the attention of the Secretary, Standards Council, NFPA, 1 Batterymarch Park, P.O. Box 9101, Quincy, MA 02269-9101.

For more information about NFPA, visit the NFPA website at www.nfpa.org.

Copyright National Fire Protection Association
Provided by IHS under license with NFPA
No reproduction or networking permitted without license from IHS
Not for Resale

Copyright © 2005, National Fire Protection Association, All Rights Reserved

NFPA 1991

Standard on

Vapor-Protective Ensembles for Hazardous Materials Emergencies

2005 Edition

This edition of NFPA 1991, *Standard on Vapor-Protective Ensembles for Hazardous Materials Emergencies,* was prepared by the Technical Committee on Hazardous Materials Protective Clothing and Equipment, released by the Technical Correlating Committee on Fire and Emergency Services Protective Clothing and Equipment, and acted on by NFPA at its November Association Technical Meeting held November 13–17, 2004, in Miami Beach, FL. It was issued by the Standards Council on January 14, 2005, with an effective date of February 7, 2005, and supersedes all previous editions.

This edition of NFPA 1991 was approved as an American National Standard on February 7, 2005.

Origin and Development of NFPA 1991

In 1985, the National Transportation Safety Board (NTSB) issued report I-004-5 on a hazardous material incident that occurred in Benicia, California. In that report, the NTSB recommended that standards be developed for protective clothing for protection from hazardous chemicals. The United States Department of Transportation (DOT) issued a position that requested private sector standards development to undertake the project of writing the standards on hazardous chemical protective clothing and asked other governmental agencies to assist and participate in the private sector standards development system. The DOT at this time also directly requested that the NFPA develop documents on hazardous chemical protective clothing. The Environmental Protection Agency (EPA), the United States Coast Guard (USCG), the Federal Emergency Management Agency (FEMA), and the Occupational Safety and Health Administration (OSHA) either adopted position statements modeled after the DOT position or endorsed the DOT position.

During 1985, the NFPA Standards Council approved a project for development of these standards and assigned the project to the Technical Committee on Fire Service Protective Clothing and Equipment. That committee established a standing Subcommittee on Hazardous Chemicals Protective Clothing, and they began their work in Phoenix, AZ, in March 1986. Representatives from the USCG, FEMA, and OSHA participated on the subcommittee.

At the same time, ASTM was developing a document on a selection of chemicals for evaluating protective clothing materials that would serve as one of several ASTM testing criteria that would be referenced in the NFPA standards.

The subcommittee met several times over a 2½-year period at different locations across the country and developed two standards, one for vapor-protection and one for liquid splash-protection.

NFPA 1991 addresses vapor-protective ensembles designed to protect emergency response personnel against exposure to specified chemicals in vapor and liquid splash environments during hazardous materials emergencies. Chemical permeation resistance documentation is required for primary suit materials (garment, visor, gloves, and boots) against each chemical in the NFPA battery of chemicals and any additional chemicals or specific chemical mixtures for which the manufacturer is certifying the suit. The NFPA battery of chemicals consists of 21 chemicals: those specified in ASTM F 1001, *Standard Guide for Chemicals to Evaluate Protective Clothing Materials.* These chemicals were selected because they are representative of the classes of chemicals that are encountered during hazardous chemical emergencies.

The standard includes performance requirements that were established to reflect simulated use conditions. A suit pressurization test is used to check the airtight integrity of each protective suit. Also, an overall suit water penetration test is designed to ensure the suit provides full body protection against liquid splashes. Primary suit materials must resist permeation for one hour or more by each chemical in the NFPA battery. Manufacturers may certify protective suits for additional chemicals when the same permeation performance is met. Also included are penetration resistance testing of closures and leak and cracking pressure tests for exhaust valves. These tests allow determination of adequate suit component performance in hazardous chemical environments.

Copyright National Fire Protection Association
Provided by IHS under license with NFPA
No reproduction or networking permitted without license from IHS
Not for Resale

Material testing for burst strength, tear strength, abrasion resistance, flammability resistance, cold temperature performance, and flexural fatigue are required so that materials used for vapor-protective suits will afford adequate protection in the environment where they will be used.

The other standard for hazardous materials emergency responders is NFPA 1992. It addresses liquid splash-protective ensembles and clothing designed to protect against exposure to specified chemicals in liquid splash environments during hazardous materials emergencies. Chemical penetration resistance documentation of garment material against an NFPA battery of test chemicals and any additional chemicals or specific chemical mixtures for which the manufacturer is certifying the suit is required. These do not include liquid chemicals with known or suspected carcinogenicity or skin toxicity because these garments deal with skin exposure and not inhalation.

The first edition of NFPA 1991 was voted on by the Association at the 1989 Fall Meeting in Seattle, Washington, on November 15, 1989, and had an effective date of February 5, 1990.

The Subcommittee on Hazardous Chemicals Protective Clothing began an early revision (4-year cycle) of the 1990 edition of NFPA 1991 in December 1991. During 1993, the NFPA restructured the manner in which committees were organized, and all standing subcommittees were eliminated. Within the Technical Committee on Fire Service Protective Clothing and Equipment, the former standing subcommittees were reorganized as task groups to address specific technical issues, and the technical committee assumed the entire responsibility for NFPA 1991.

The second edition of NFPA 1991 encompassed revised scope and purpose sections to include optional components for enhanced protection and replacement items. Test methods were updated and refined to better ensure repeatability of testing results. Extensive changes were made to the product labels to better accommodate the optional and replacement items.

The second edition was acted on by the membership of the Association at the NFPA Annual Meeting in San Francisco, California, on May 18, 1994, and was issued with an effective date of August 5, 1994.

In January 1995, the entire project for fire service protective clothing and equipment was reorganized by the Standards Council. The new project has a Technical Correlating Committee on Fire and Emergency Services Protective Clothing and Equipment and seven technical committees operating within the project. The former standing Subcommittee on Hazardous Chemicals Protective Clothing was established as the new Technical Committee on Hazardous Materials Protective Clothing and Equipment and has responsibility for NFPA 1991.

The third edition, with the new title of *Standard on Vapor-Protective Ensembles for Hazardous Materials Emergencies*, represented a complete revision to the second edition and addressed the protection as an ensemble rather than as separate items, but did provide for replacement elements for gloves and footwear. The third edition was presented to the Association membership at the 1999 November Meeting in New Orleans, Louisiana, on November 17, 1999, and issued by the Standards Council with an effective date of February 11, 2000.

This 2005 edition (the fourth edition) is once again a complete revision of NFPA 1991 and is now reformatted according to the new style for all NFPA codes and standards. As a result, chapter titles and numbering, as well as paragraph numbering, have changed. While this edition's content is in a different order than previous editions', all the material is here and the table of contents will quickly direct users of the document to the appropriate chapters and sections. The Committee has included in Chapter 4 new requirements for manufacturers' quality assurance programs, and for situations where hazards involving compliant products are believed to exist, including the appropriate actions in addressing these situations if there is a previously unknown threat to the users. These new requirements apply to all fire and emergency services product standards that are the responsibility of this Project. The formerly optional requirements for protection from chemical and biological terrorism agents are no longer optional and are now incorporated into the base requirements for all vapor-protective ensembles. The change provides this additional protection from CBR(N) exposures for the hazardous materials protective ensemble that offers the highest level of protection for emergency responders: the vapor-protective ensemble. The other two optional requirements, chemical flash fire protection for escape only and liquefied gas protection, remain as optional features that the purchasers can specify in purchase specifications. All labeling, design, performance, and testing requirements have been reviewed and refined as necessary.

In Memoriam, 11 September 2001

We pay tribute to the 343 members of FDNY who gave their lives to save civilian victims on 11 September 2001, at the World Trade Center. They are true American heroes in death, but they were also American heroes in life. We will keep them in our memory and in our hearts. They are the embodiment of courage, bravery, and dedication. May they rest in peace.

--`,,,```-`-`,,`,,`,`,,`---

Copyright National Fire Protection Association
Provided by IHS under license with NFPA
No reproduction or networking permitted without license from IHS
Not for Resale

Technical Correlating Committee on Fire and Emergency Services Protective Clothing and Equipment

Richard M. Duffy, *Chair*
International Association of Fire Fighters, DC [L]
Rep. International Association of Fire Fighters

William M. Lambert, *Secretary*
Mine Safety Appliances Company, PA [M]
Rep. Compressed Gas Association

Leslie Anderson, USDA Forest Service, MT [E]
Roger L. Barker, North Carolina State University, NC [SE]
Nicholas J. Curtis, Lion Apparel, Inc., OH [M]
Robert A. Freese, Globe Manufacturing Company, NH [M]
Andy Gbur, Intertek, OH [RT]
Bill Grilliot, TFG/Morning Pride Manufacturing, LLC, OH [M]
Rep. Fire and Emergency Manufacturers and Services Association Inc.
William E. Haskell, III, Battelle Memorial Institute, MA [RT]
Virgil Hathaway, San Diego Fire Department, CA [U]
Rep. Southern Area Fire Equipment Research
Kimberly M. Henry, Celanese Advanced Materials Inc., NC [M]
James S. Johnson, Lawrence Livermore National Laboratory, CA [RT]
Cy Long, Texas Commission on Fire Protection, TX [E]
David G. Matthews, Fire & Industrial (P.P.E) Ltd., England [SE]
Richard W. Metzler, U.S. Department of Health and Human Services, PA [RT]
Jim Minx, Oklahoma State Firefighters Association, OK [C]
Rep. Oklahoma State Firefighters Association
Stephen R. Sanders, Safety Equipment Institute (SEI), VA [RT]
Denise N. Statham, Southern Mills, Inc., GA [M]
Jeffrey O. Stull, International Personnel Protection, Inc., TX [SE]
David Trivette, Tyco/Scott Health and Safety, NC [M]
Rep. International Safety Equipment Association
Robert D. Tutterow, Jr., Charlotte Fire Department, NC [U]
Rep. Fire Industry Equipment Research Organization
Harry P. Winer, U.S. Department of the Navy, MA [RT]
Thomas L. Wollan, Underwriters Laboratories Inc., NC [RT]

Alternates

Richard W. Blocker, Jr., The DuPont Company, VA [M]
(Alt. to K. M. Henry)
Leslie F. Boord, U.S. Department of Health and Human Services, PA [RT]
(Alt. to R. W. Metzler)
Janice C. Bradley, International Safety Equipment Association, VA [M]
(Alt. to D. Trivette)
Steven D. Corrado, Underwriters Laboratories Inc., NC [RT]
(Alt. to T. L. Wollan)
Patricia A. Freeman, Globe Manufacturing Company, NH [M]
(Alt. to R. A. Freese)
Patricia A. Gleason, Safety Equipment Institute (SEI), VA [RT]
(Alt. to S. R. Sanders)
Mary I. Grilliot, TFG/Morning Pride Manufacturing, LLC, OH [M]
(Alt. to B. Grilliot)
Steven B. Lumry, Oklahoma City Fire Department, OK [C]
(Alt. to J. Minx)
Frank P. Taylor, Lion Apparel, Inc., VA [M]
(Alt. to N. J. Curtis)

Nonvoting

Donna P. Brehm, Virginia Beach Fire Department, VA [U]
Rep. TC on Emergency Medical Services PC&E
Don R. Forrest, United Firefighters of Los Angeles City, CA [L]
Rep. TC on Special Operations PC&E
George M. Jackson, USDA Forest Service, MT [E]
Rep. TC on Wildland Fire Fighting PC&E
Glenn P. Jirka, Miami Township Fire and EMS Division, OH [E]
Rep. TC on Hazardous Materials PC&E
Kirk Owen, Plano Fire Department, TX [U]
Rep. TC on Structural and Proximity Fire Fighting PC&E
Ray F. Reed, Dallas Fire Department, TX [U]
Rep. TC on Respiratory Protection Equipment
Bruce H. Varner, Santa Rosa Fire Department, CA [E]
Rep. TC on Electronic Safety Equipment

Bruce W. Teele, NFPA Staff Liaison

This list represents the membership at the time the Committee was balloted on the final text of this edition. Since that time, changes in the membership may have occurred. A key to classifications is found at the back of the document.

NOTE: Membership on a committee shall not in and of itself constitute an endorsement of the Association or any document developed by the committee on which the member serves.

Committee Scope: This Committee shall have primary responsibility for documents on the design, performance, testing, and certification of protective clothing and protective equipment manufactured for fire and emergency services organizations and personnel, to protect against exposures encountered during emergency incident operations. This Committee shall also have the primary responsibility for documents on the selection, care, and maintenance of such protective clothing and protective equipment by fire and emergency services organizations and personnel.

--`,,`-`-`,,`,,`,`,,`---

Copyright National Fire Protection Association
Provided by IHS under license with NFPA
No reproduction or networking permitted without license from IHS
Not for Resale

Technical Committee on Hazardous Materials Protective Clothing and Equipment

Glenn P. Jirka, *Chair*
Miami Township Fire and EMS Division, OH [E]
Rep. The InterAgency Board

Patricia A. Gleason, *Secretary*
Safety Equipment Institute (SEI), VA [RT]

William Alexander, Onguard Industries, MD [M]
Jeffrey B. Borkowski, Fire Department, City of New York, NY [U]
Steven D. Corrado, Underwriters Laboratories Inc., NC [RT]
Steven M. De Lisi, Virginia Air National Guard, VA [U]
Wade G. DeHate, Hillsborough County Fire Rescue, FL [E]
Jan Dunbar, El Dorado Hills, CA [E]
Rep. International Association of Fire Chiefs
Daniel Gohlke, W. L. Gore & Associates, MD [M]
Kevin W. Klamser, U.S. Navy Coastal Systems Station, FL [RT]
Brett LaFrance, Intertek-ETL Semko, NY [RT]
Karen E. Lehtonen, Lion Apparel, Inc., OH [M]
Trudy J. Lewis, Battelle Memorial Institute, OH [RT]
Ulf Nystrom, Trelleborg Protective Products AB, Sweden [M]
Louis V. Ott, Gentex Corporation, PA [M]
Rep. International Safety Equipment Association
Kenneth A. Pever, Guardian Manufacturing Company, OH [M]
Mel Seng, TFG/Norcross Safety Products, IL [M]
Jeffrey O. Stull, International Personnel Protection, Inc., TX [SE]
Jonathan V. Szalajda, U.S. Department of Health and Human Services, PA [E]
Robert West, Texas Instruments, TX [U]
James P. Zeigler, DuPont Personal Protection, VA [M]
Michael Ziskin, Field Safety Corporation, CT [RT]

Alternates

Dale Gregory Beggs, Texas Instruments, TX [U]
(Alt. to R. West)
Nicholas J. Curtis, Lion Apparel, Inc., OH [M]
(Alt. to K. E. Lehtonen)
Andy Gbur, Intertek, OH [RT]
(Alt. to B. LaFrance)
Russell R. Greene, Battelle Memorial Institute, OH [RT]
(Alt. to T. J. Lewis)
A. Ira Harkness, U.S. Department of the Navy, FL [RT]
(Alt. to K. W. Klamser)
Thomas M. Pease, Gentex Corporation, PA [M]
(Alt. to L. V. Ott)
John Reilly, Total Fire Group, OH [M]
(Alt. to M. Seng)
Angie M. Shepherd, Underwriters Laboratories Inc., NC [RT]
(Alt. to S. D. Corrado)

Bruce W. Teele, NFPA Staff Liaison

This list represents the membership at the time the Committee was balloted on the final text of this edition. Since that time, changes in the membership may have occurred. A key to classifications is found at the back of the document.

NOTE: Membership on a committee shall not in and of itself constitute an endorsement of the Association or any document developed by the committee on which the member serves.

Committee Scope: This Committee shall have primary responsibility for documents on protective clothing and protective equipment, except respiratory protective equipment, that provides hand, foot, torso, limb, and head protection for fire fighters and other emergency services responders during incidents that involve hazardous materials operations. These operations involve the activities of rescue; hazardous material confinement, containment, and mitigation; and property conservation where exposure to substances that present an unusual danger to responders are present or could occur due to toxicity, chemical reactivity, decomposition, corrosiveness, or similar reactions.

Additionally, this committee shall have primary responsibility for documents on the selection, care, and maintenance of hazardous materials protective clothing and protective equipment by fire and emergency services organizations and personnel.

--`,,`-`-`,,`,,`,`,,`---

Copyright National Fire Protection Association
Provided by IHS under license with NFPA
No reproduction or networking permitted without license from IHS
Not for Resale

Contents

Chapter 1 Administration **1991–** 6
1.1 Scope **1991–** 6
1.2 Purpose **1991–** 6
1.3 Application **1991–** 6
1.4 Units **1991–** 7

Chapter 2 Referenced Publications **1991–** 7
2.1 General **1991–** 7
2.2 NFPA Publications **1991–** 7
2.3 Other Publications **1991–** 7

Chapter 3 Definitions **1991–** 7
3.1 General **1991–** 7
3.2 NFPA Official Definitions **1991–** 7
3.3 General Definitions **1991–** 8

Chapter 4 Certification **1991–**10
4.1 General **1991–**10
4.2 Certification Program **1991–**10
4.3 Inspection and Testing **1991–**11
4.4 Annual Verification of Product Compliance **1991–**12
4.5 Manufacturers' Quality Assurance Program **1991–**13
4.6 Hazards Involving Compliant Product ... **1991–**13
4.7 Manufacturers' Investigation of Complaints and Returns **1991–**13
4.8 Manufacturers' Safety Alert and Product Recall Systems **1991–**13

Chapter 5 Labeling and Information **1991–**14
5.1 Product Label Requirements **1991–**14
5.2 User Information **1991–**15
5.3 Technical Data Package **1991–**15

Chapter 6 Design Requirements **1991–**16
6.1 Vapor-Protective Ensemble Design Requirements **1991–**16
6.2 Vapor-Protective Glove Element Design Requirements **1991–**17
6.3 Vapor-Protective Footwear Element Design Requirements **1991–**17

Chapter 7 Performance Requirements **1991–**17
7.1 Vapor-Protective Ensemble Performance Requirements **1991–**17
7.2 Vapor-Protective Suit Element Performance Requirements **1991–**18
7.3 Vapor-Protective Suit Element Visor Performance Requirements **1991–**19
7.4 Vapor-Protective Glove Element Performance Requirements **1991–**19
7.5 Vapor-Protective Footwear Element Performance Requirements **1991–**20
7.6 Vapor-Protective Ensemble and Ensemble Element CBRN Protection Performance Requirements for Terrorism Incidents **1991–**20
7.7 Optional Liquefied Gas Protection Performance Requirements for Vapor-Protective Ensembles and Ensemble Elements **1991–**21
7.8 Optional Chemical Flash Fire Protection Performance Requirements for Vapor-Protective Ensembles and Ensemble Elements **1991–**21

Chapter 8 Test Methods **1991–**21
8.1 Sample Preparation Procedures **1991–**21
8.2 Gastight Integrity Test **1991–**22
8.3 Liquidtight Integrity Test **1991–**22
8.4 Overall Ensemble Function and Integrity Test **1991–**23
8.5 Maximum Suit Ventilation Rate Test **1991–**24
8.6 Chemical Permeation Resistance Test **1991–**24
8.7 Flammability Resistance Test **1991–**27
8.8 Overall Ensemble Inward Leakage Test .. **1991–**27
8.9 Exhaust Valve Mounting Strength Test ... **1991–**29
8.10 Burst Strength Test **1991–**30
8.11 Puncture Propagation Tear Resistance Test **1991–**30
8.12 Cold Temperature Performance Test One **1991–**30
8.13 Fitting Pull Out Strength Test **1991–**30
8.14 Cold Temperature Performance Test Two **1991–**31
8.15 Cut Resistance Test **1991–**31
8.16 Puncture Resistance Test One **1991–**32
8.17 Glove Hand Function Test **1991–**32
8.18 Thermal Protective Performance (TPP) Test **1991–**32
8.19 Puncture Resistance Test Two **1991–**33
8.20 Abrasion Resistance Test **1991–**33
8.21 Impact and Compression Test **1991–**33
8.22 Ladder Shank Bend Resistance Test **1991–**33
8.23 Slip Resistance Test **1991–**34
8.24 Seam/Closure Breaking Strength Test ... **1991–**34
8.25 Closure Penetration Resistance Test **1991–**34
8.26 Exhaust Valve Inward Leakage Test **1991–**35
8.27 Overall Ensemble Flash Test **1991–**35

Annex A Explanatory Material **1991–**37

Annex B Informational References **1991–**42

Index **1991–**43

Copyright National Fire Protection Association
Provided by IHS under license with NFPA
No reproduction or networking permitted without license from IHS
Not for Resale

NFPA 1991

Standard on

Vapor-Protective Ensembles for Hazardous Materials Emergencies

2005 Edition

IMPORTANT NOTE: This NFPA document is made available for use subject to important notices and legal disclaimers. These notices and disclaimers appear in all publications containing this document and may be found under the heading "Important Notices and Disclaimers Concerning NFPA Documents." They can also be obtained on request from NFPA or viewed at www.nfpa.org/disclaimers.

NOTICE: An asterisk (*) following the number or letter designating a paragraph indicates that explanatory material on the paragraph can be found in Annex A.

Information on referenced publications can be found in Chapter 2 and Annex B.

Chapter 1 Administration

1.1* Scope.

1.1.1* This standard shall specify minimum requirements for the design, performance, testing, documentation, and certification of vapor-protective ensembles and ensemble elements used by emergency response personnel during hazardous materials incidents and chemical, biological, or radiological terrorism incidents.

1.1.2 This standard shall also specify criteria for chemical agents, biological agents, and radioactive particulates encountered during terrorism incidents.

1.1.3* This standard shall also specify additional *optional* criteria for vapor-protective ensembles that provide escape protection from chemical flash fires encountered during hazardous materials incidents.

1.1.4 This standard shall specify requirements for new vapor-protective ensembles and new ensemble elements.

1.1.5 This standard alone shall not specify requirements for protective clothing for any fire fighting applications.

1.1.6 This standard alone shall not specify requirements for protection against ionizing radiation, cryogenic liquid hazards, or explosive atmospheres.

1.1.7* This standard shall not specify requirements for the respiratory protection that is necessary for proper protection with the protective ensemble.

1.1.8 Certification of compliant vapor-protective ensembles and compliant elements to the requirements of this standard shall not preclude certification to additional appropriate standards where the ensemble or ensemble elements meet all the applicable requirements of each standard.

1.1.9 This standard shall not be construed as addressing all of the safety concerns, if any, associated with its use for the designing, manufacturing, testing, or certifying of product to meet the requirements of this standard. It shall be the responsibility of the persons and organizations that use this standard to establish safety and health practices and determine the applicability of regulatory limitations prior to use of this standard.

1.1.10 Nothing herein shall restrict any jurisdiction or manufacturer from exceeding these minimum requirements.

1.2 Purpose.

1.2.1* The purpose of this standard shall be to establish a minimum level of protection for emergency response personnel against adverse vapor, liquid-splash, and particulate environments during hazardous materials incidents, and from specified chemical and biological terrorism agents in vapor, liquid splash, and particulate environments during chemical and biological terrorism incidents.

1.2.1.1 The purpose of this standard shall also be to establish a minimum level of liquefied gas protection as an *option* for compliant vapor-protective ensembles and compliant ensemble elements.

1.2.1.2 The purpose of this standard shall also be to establish a minimum level of *limited* chemical flash fire protection, *for escape only* in the event of a chemical flash fire, as an option for compliant vapor-protective ensembles and compliant ensemble elements.

1.2.1.3 The purpose of these options shall be to provide emergency response organizations the flexibility to specify neither, one, or both of these options in their purchase specifications according to the anticipated exposure and expected needs of the emergency response organization.

1.2.2* Controlled laboratory tests used to determine compliance with the performance requirements of this standard shall not be deemed as establishing performance levels for all situations to which personnel can be exposed.

1.2.3 This standard is not intended to be utilized as a detailed manufacturing or purchase specification, but shall be permitted to be referenced in purchase specifications as minimum requirements.

1.3 Application.

1.3.1 This standard shall apply to the design, manufacturing, testing, documentation and certification of new vapor-protective ensembles and new ensemble elements. This edition of NFPA 1991 shall not apply to vapor-protective ensembles and ensemble elements manufactured to previous editions of NFPA 1991, *Standard on Vapor-Protective Suits for Hazardous Chemical Emergencies.*

1.3.2* This standard alone shall not apply to protective clothing for any fire-fighting applications.

1.3.3 This standard alone shall not apply to protective clothing for protection against ionizing radiation, cryogenic liquid hazards, or explosive atmospheres.

1.3.4 This standard shall not apply to use requirements for vapor-protective ensembles or ensemble elements as these requirements are specified in NFPA 1500, *Standard on Fire Department Occupational Safety and Health Program.*

1.3.5* The requirements of this standard shall not apply to any accessories that could be attached to the product but are not necessary for the product to meet the requirements of this standard.

Copyright National Fire Protection Association
Provided by IHS under license with NFPA
No reproduction or networking permitted without license from IHS
Not for Resale

1.4* Units.

1.4.1 In this standard, values for measurement are followed by an equivalent in parentheses, but only the first stated value shall be regarded as the requirement.

1.4.2 Equivalent values in parentheses shall not be considered as the requirement as these values are approximate.

Chapter 2 Referenced Publications

2.1 General. The documents or portions thereof listed in this chapter are referenced within this standard and shall be considered part of the requirements of this document.

2.2 NFPA Publications. National Fire Protection Association, 1 Batterymarch Park, Quincy, MA 02169-7471.

NFPA 1500, *Standard on Fire Department Occupational Safety and Health Program,* 2002 edition.

NFPA 1981, *Standard on Open-Circuit Self-Contained Breathing Apparatus for Fire and Emergency Services,* 2002 edition.

2.3 Other Publications.

2.3.1 ANSI Publications. American National Standards Institute, Inc., 25 West 43rd Street, 4th floor, New York, NY 10036.

ANSI Z41, *Standard for Personal Protection — Protective Footwear*, 1999.

ANSI Z89.1, *Standard for Industrial Head Protection*, 1997.

2.3.2 ASTM Publications. American Society for Testing and Materials, 100 Barr Harbor Drive, West Conshohocken, PA 19428-2959.

ASTM D 747, *Standard Test Method for Apparent Bending Modulus of Plastics by Means of a Cantilever Beam*, 2002.

ASTM D 751, *Standard Methods of Testing Coated Fabrics*, 2000.

ASTM D 1630, *Standard Test Method for Rubber Property — Abrasion Resistance (NBS Abrader),* 2000.

ASTM D 2136, *Standard Test Method for Coated Fabrics — Low Temperature Bend Test*, 2002.

ASTM D 2582, *Standard Test Method for Puncture Propagation Tear Resistance of Plastic Film and Thin Sheeting,* 2003.

ASTM D 4157, *Standard Test Method for Abrasion Resistance of Textile Fabrics (Oscillatory Cylinder Method),* 2002.

ASTM F 392, *Standard Test Method for Flex Durability of Flexible Barrier Materials*, 2004.

ASTM F 489, *Standard Test Method for Static Coefficient of Friction of Shoe Sole and Heel Materials as Measured by the James Machine*, 1996.

ASTM F 739, *Standard Test Method for Resistance of Protective Clothing Materials to Permeation by Liquids or Gases Under Conditions of Continuous Contact*, 1999a.

ASTM F 903, *Standard Test Method for Resistance of Protective Clothing Materials to Penetration by Liquids*, 2003.

ASTM F 1052, *Standard Test Method for Pressure Testing of Vapor-Protective Ensembles*, 2002.

ASTM F 1154, *Standard Practice for Qualitatively Evaluating the Comfort, Fit, Function, and Integrity of Chemical Protective Suit Ensembles*, 2004.

ASTM F 1301, *Standard Practice for Labeling Chemical Protective Clothing*, 2001.

ASTM F 1342, *Standard Test Method for Resistance of Protective Clothing Materials to Puncture*, 1996.

ASTM F 1358, *Standard Test Method for Resistance of Protective Clothing Materials to Flame Impingement*, 2000.

ASTM F 1359, *Standard Test Method for Measuring the Liquid Penetration Resistance of Protective Clothing or Protective Ensembles Using a Shower Spray While on a Mannequin*, 2004.

ASTM F 1790, *Standard Test Methods for Measuring Cut Resistance of Materials Used in Protective Clothing*, 1997.

ASTM F 2010, *Standard Test Method for Evaluation of Glove Effects on Wearer Hand Dexterity Using a Modified Pegboard Test*, 2000.

2.3.3 FIA Publication. Footwear Industries of America, 1420 K Street, NW, Washington, DC 20005.

FIA Standard 1209, *Whole Shoe Flex*, 1984.

2.3.4 ISO Publications. International Organization for Standardization, 1, rue de Varembé, Case postale 56, CH-1211 Geneve 20, Switzerland.

ISO 27, *Guidelines for corrective action to be taken by a certification body in the event of misuse of its mark of conformity*, 1983.

ISO 65, *General requirements for bodies operating product certification systems*, 1996.

ISO 9001, *Quality Management Systems — Requirements*, 2000.

ISO 17011, *General requirements for accreditation bodies accrediting conformity assessment bodies,* 2003.

ISO 17025, *General requirements for the competence of testing and calibration laboratories*, 1999.

ISO 17492, *Clothing for protection against heat and flame — Determination of heat transmission on exposure to both flame and radiant heat*, 2003.

2.3.5 U.S. Government Publication. U.S. Government Printing Office, Washington, DC 20402.

Title 29, Code of Federal Regulations, Part 1910.132, "Personal Protective Equipment," 1994.

Chapter 3 Definitions

3.1 General. The definitions contained in this chapter shall apply to the terms used in this standard. Where terms are not defined in this chapter or within another chapter, they shall be defined using their ordinarily accepted meanings within the context in which they are used. *Merriam-Webster's Collegiate Dictionary,* 11th edition, shall be the source for the ordinarily accepted meaning.

3.2 NFPA Official Definitions.

3.2.1* Approved. Acceptable to the authority having jurisdiction.

3.2.2* Authority Having Jurisdiction (AHJ). An organization, office, or individual responsible for enforcing the requirements of a code or standard, or for approving equipment, materials, an installation, or a procedure.

Copyright National Fire Protection Association
Provided by IHS under license with NFPA
No reproduction or networking permitted without license from IHS
Not for Resale

3.2.3 Labeled. Equipment or materials to which has been attached a label, symbol, or other identifying mark of an organization that is acceptable to the authority having jurisdiction and concerned with product evaluation, that maintains periodic inspection of production of labeled equipment or materials, and by whose labeling the manufacturer indicates compliance with appropriate standards or performance in a specified manner.

3.2.4* Listed. Equipment, materials, or services included in a list published by an organization that is acceptable to the authority having jurisdiction and concerned with evaluation of products or services, that maintains periodic inspection of production of listed equipment or materials or periodic evaluation of services, and whose listing states that either the equipment, material, or service meets appropriate designated standards or has been tested and found suitable for a specified purpose.

3.2.5 Shall. Indicates a mandatory requirement.

3.2.6 Should. Indicates a recommendation or that which is advised but not required.

3.2.7 Standard. A document, the main text of which contains only mandatory provisions using the word "shall" to indicate requirements and which is in a form generally suitable for mandatory reference by another standard or code or for adoption into law. Nonmandatory provisions shall be located in an appendix or annex, footnote, or fine-print note and are not to be considered a part of the requirements of a standard.

3.3* General Definitions.

3.3.1 Afterflame Time. The length of time for which a material, component, or chemical-protective suit continues to burn after the simulated chemical flash fire has ended.

3.3.2 Biological Agents. Biological materials that are capable of causing an acute disease or long-term damage to the human body.

3.3.3 Biological Warfare Agent. A biological substance intended to kill, seriously injure, or incapacitate humans through physiological effects.

3.3.4 Boot. See 3.3.69, Vapor-Protective Footwear.

3.3.5 Bootie. A sock-like extension of the garment or suit leg that covers the entire foot.

3.3.6 Care. Procedures for cleaning, decontamination, and storage of protective clothing and equipment.

3.3.7 Certification/Certified. A system whereby a certification organization determines that a manufacturer has demonstrated the ability to produce a product that complies with the requirements of this standard, authorizes the manufacturer to use a label on listed products that comply with the requirements of this standard, and establishes a follow-up program conducted by the certification organization as a check on the methods the manufacturer uses to determine continued compliance of labeled and listed products with the requirements of this standard.

3.3.8 Certification Organization. An independent, third-party organization that determines product compliance with the requirements of this standard with a labeling/listing/follow-up program.

3.3.9 Chemical and Biological Terrorism Incidents. Situations involving the release of chemical or biological warfare agents in civilian areas by terrorists.

3.3.10 Chemical and Biological Terrorism Vapor-Protective Ensemble. See 3.3.65, Vapor-Protective Ensemble.

3.3.11* Chemical Flash Fire. The ignition of a flammable and ignitible vapor or gas that produces an outward expanding flame front as those vapors or gases burn. This burning and expanding flame front, a fireball, will release both thermal and kinetic energy to the environment.

3.3.12 Chemical-Protective Elements. See 3.3.24, Ensemble Elements.

3.3.13* Chemical-Protective Layer. The material or composite used in an ensemble or clothing for the purpose of providing protection from chemical hazards.

3.3.14 Chemical Warfare Agent. A chemical substance intended to kill, seriously injure, or incapacitate humans through physiological effects.

3.3.15 Compliance/Compliant. Meeting or exceeding all applicable requirements of this standard.

3.3.16* Component(s). Any material, part, or subassembly used in the construction of the compliant product.

3.3.17 Component Part(s). Any material(s) or part(s) used in the construction of a vapor-protective ensemble or ensemble elements.

3.3.18 Composite. The layer or layers of materials or components.

3.3.19 Cracking Pressure. The pressure at which the suit exhaust valve begins to open, releasing exhaust air to the outside suit environment.

3.3.20* Cryogenic Liquid. A refrigerated liquefied gas having a boiling point below –90°C (–130°F) at atmospheric pressure.

3.3.21 Element(s). See 3.3.24, Ensemble Elements.

3.3.22 Emergency Response Personnel. Personnel assigned to organizations that have the responsibility for responding to hazardous materials emergencies.

3.3.23 Ensemble. See 3.3.65, Vapor-Protective Ensemble.

3.3.24* Ensemble Elements. The compliant products that provide protection to the upper and lower torso, arms, legs, head, hands, and feet.

3.3.25 Exhaust Valve. One-way vent that releases exhaust to the outside environment and prevents entry of outside environment.

3.3.26* External Fittings. Any component that allows the passage of gases, liquids, or electrical current from the outside to the inside of the element or item. Any fitting externally located on, and part of, the ensemble which is not part of the garment material, visor material, gloves, footwear, seams, or closure assembly.

3.3.27 Flammable or Explosive Atmospheres. Atmospheres containing solids, liquids, vapors, or gases at concentrations that will burn or explode if ignited.

3.3.28 Follow-Up Program. The sampling, inspections, tests, or other measures conducted by the certification organization on a periodic basis to determine the continued compliance of labeled and listed products that are being produced by the manufacturer to the requirements of this standard.

3.3.29 Footwear. See 3.3.69, Vapor-Protective Footwear.

Copyright National Fire Protection Association
Provided by IHS under license with NFPA
No reproduction or networking permitted without license from IHS
Not for Resale

3.3.30 Footwear Upper. That portion of the footwear element above the sole, heel, and insole.

3.3.31 Garment. See 3.3.71, Vapor-Protective Suit.

3.3.32 Glove. See 3.3.70, Vapor-Protective Gloves.

3.3.33* Hazardous Materials. A substance (solid, liquid, or gas) that when released is capable of creating harm to people, the environment, and property.

3.3.34* Hazardous Materials Emergencies. Incidents involving the release or potential release of hazardous materials.

3.3.35 Ionizing Radiation. Radiation of sufficient energy to alter the atomic structure of materials or cells with which it interacts, including electromagnetic radiation such as x-rays, gamma rays, and microwaves and particulate radiation such as alpha and beta particles.

3.3.36 Ladder Shank. See 3.3.58, Shank.

3.3.37* Liquefied Gas. A gas that, under its charged pressure, is partially liquid at 21°C (70°F).

3.3.38 Liquid Splash-Protective Ensemble. Multiple elements of compliant protective clothing and equipment products that when worn together provide protection from some risks, but not all risks, of hazardous materials emergency incident operations involving liquids.

3.3.39 Maintenance. Procedures for inspection, repair, and removal from service of vapor-protective ensembles.

3.3.40 Manufacturer. The entity that assumes the liability, provides the warranty for the compliant product, or obtains the product certification.

3.3.41 Model. The collective term used to identify a group of individual vapor-protective ensembles or elements of the same basic design and components from a single manufacturer produced by the same manufacturing and quality assurance procedures that are covered by the same certification.

3.3.42 Normalized Breakthrough Detection Time. The time at which the permeation rate of a chemical through a material reaches 0.1 $\mu g/cm^2/min$.

3.3.43 Outer Boot. A secondary boot worn over the footwear ensemble element or bootie for the purpose of providing physical protection in order to meet the requirements of this standard.

3.3.44 Outer Garment. A secondary garment worn over the suit ensemble element for the purpose of providing physical protection in order to meet the requirements of this standard.

3.3.45 Outer Glove. A secondary glove worn over the glove ensemble element for the purpose of providing physical protection in order to meet the requirements of this standard.

3.3.46 Particulates. Solid matter that is dispersed in air as a mixture. For the purpose of this standard, particulates do not include aerosol, or suspended liquid droplets in air. Aerosols are considered liquids.

3.3.47* Primary Materials. Vapor-protective ensemble and element materials limited to the suit material, hood and visor material, glove material, and footwear material that provide protection from chemical and physical hazards.

3.3.48 Product Label. A label or marking affixed to each compliant vapor-protective ensemble and compliant ensemble element by the manufacturer. Such labels contain compliance statements, certification statements, general information, care, maintenance, or similar data. The product label is not the certification organization's label, symbol, or identifying mark; however, the certification organization's label, symbol, or identifying mark is attached to or a part of the product label.

3.3.49 Protective Ensemble. See 3.3.65, Vapor-Protective Ensemble.

3.3.50 Protective Footwear. See 3.3.69, Vapor-Protective Footwear.

3.3.51 Protective Glove. See 3.3.70, Vapor-Protective Gloves.

3.3.52 Protective Suit. See 3.3.71, Vapor-Protective Suit.

3.3.53* Radioactive Particulate. Finely divided solids, such as powders and dusts, which emit ionizing radiation in excess of background radiation levels.

3.3.54 Recall System. The action taken by which a manufacturer identifies an element, provides notice to the users, withdraws an element from the marketplace and distribution sites, and returns the element to the manufacturer or other acceptable location for corrective action.

3.3.55 Respiratory Equipment. A positive pressure, self-contained breathing apparatus (SCBA) or combination SCBA/supplied-air breathing apparatus certified by the National Institute for Occupational Safety and Health (NIOSH) and certified as compliant with NFPA 1981, *Standard on Open-Circuit Self-Contained Breathing Apparatus for Fire and Emergency Services.*

3.3.56 Sample. An amount of the material, product, or assembly to be tested that is representative of the item as a whole.

3.3.57 Seam. Any permanent attachment of two or more chemical-protective clothing materials, excluding external fittings, gaskets, and suit closure assemblies, in a line formed by joining the separate material pieces.

3.3.58 Shank. The component of footwear that provides additional support to the instep.

3.3.59 Specimen. The conditioned element, item, component, or composite that is subjected to testing. Specimens are taken from samples. In some tests, the specimen and sample can also be the same element, item, component, or composite.

3.3.60 Storage Life. The date to remove from service a vapor-protective ensemble or individual element that has undergone proper care and maintenance in accordance with manufacturer's instructions but has not been used either in training or at actual incidents.

3.3.61 Suit. See 3.3.71, Vapor-Protective Suit.

3.3.62 Suit Closure. The component that allows the wearer to enter (don) and exit (doff) the vapor-protective suit element.

3.3.63 Suit Closure Assembly. The combination of the suit closure and the seam attaching the suit closure to the suit garment, excluding any protective flap or cover.

3.3.64 Suit Material. The principal material used in the construction of the vapor-protective suit.

3.3.65* Vapor-Protective Ensemble. Multiple elements of compliant protective clothing and equipment that when worn together provide protection from some risks, but not all risks, of vapor, liquid-splash, and particulate environments during hazardous materials incidents and from chemical and biological terrorism agents in vapor, gas, liquid, or particulate forms.

Copyright National Fire Protection Association
Provided by IHS under license with NFPA
No reproduction or networking permitted without license from IHS
Not for Resale

3.3.66 Vapor-Protective Ensemble with Optional Chemical Flash Fire Escape and Liquefied Gas Protection. A compliant vapor-protective ensemble that is also certified as compliant with the optional requirements for both *limited* protection against chemical flash fire *for escape only* and for protection against liquefied gases.

3.3.67* Vapor-Protective Ensemble with Optional Chemical Flash Fire Escape Protection. A compliant vapor-protective ensemble that is also certified as compliant with the optional requirements for *limited* protection against chemical flash fire *for escape only*.

3.3.68* Vapor-Protective Ensemble with Optional Liquefied Gas Protection. A compliant vapor-protective ensemble that is also certified as compliant with the optional requirements for protection against liquefied gases.

3.3.69* Vapor-Protective Footwear. The ensemble element of the protective ensemble that provides chemical protection and physical protection to the feet, ankles, and lower legs.

3.3.70 Vapor-Protective Gloves. The ensemble element of the protective ensemble that provides chemical protection to the hands and wrists.

3.3.71 Vapor-Protective Suit. The ensemble garment element of the protective ensemble that provides chemical protection to the upper and lower torso, head, arms, and legs.

3.3.72 Visor Material. The transparent chemical-protective material that allows the wearer to see outside the protective ensemble hood.

Chapter 4 Certification

4.1 General.

4.1.1 The process of certification for protective ensembles and ensemble elements as being compliant with NFPA 1991 shall meet the requirements of Section 4.1, General; Section 4.2, Certification Program; Section 4.3, Inspection and Testing; Section 4.4, Annual Verification of Product Compliance; Section 4.5, Manufacturers' Quality Assurance Program; Section 4.6, Hazards Involving Compliant Product; Section 4.7, Manufacturers' Investigation of Complaints and Returns; and Section 4.8, Manufacturers' Safety Alert and Product Recall Systems.

4.1.2 All compliant ensembles and ensemble elements that are labeled as being compliant with this standard shall meet or exceed all applicable requirements specified in this standard and shall be certified.

4.1.3 All certification shall be performed by a certification organization that meets at least the requirements specified in Section 4.2, Certification Program, and that is accredited for personal protective equipment in accordance with ISO 65, *General requirements for bodies operating product certification systems*. The accreditation shall be issued by an accreditation body operating in accordance with ISO 17011, *General requirements for accreditation bodies accrediting conformity assessment bodies*.

4.1.4* Manufacturers shall not claim compliance with portions or segments of the requirements of this standard and shall not use the NFPA name or the name or identification of this standard, NFPA 1991, in any statements about their respective product(s) unless the product(s) is certified as compliant to this standard.

4.1.5 All compliant protective ensembles and ensemble elements shall be labeled and listed.

4.1.6 All compliant ensembles and ensemble elements shall also have a product label that meets the requirements specified in Section 5.1, Product Label Requirements.

4.1.7* The certification organization's label, symbol, or identifying mark shall be attached to the product label, or shall be part of the product label, or shall be immediately adjacent to the product label.

4.1.8 The certification organization shall not issue any new certifications to the 2000 edition of this standard on or after the NFPA effective date for the 2005 edition, which is 7 February 2005.

4.1.9 The certification organization shall not permit any manufacturer to continue to label any ensembles or ensemble elements that are certified as compliant with the 2000 edition of this standard on or after 1 September 2005.

4.1.10 The certification organization shall require manufacturers to remove all certification labels and product labels indicating compliance with the 2000 edition of this standard from all ensembles and ensemble elements that are under the control of the manufacturer on 1 September 2005, and the certification organization shall verify this action is taken.

4.2 Certification Program.

4.2.1* The certification organization shall not be owned or controlled by manufacturers or vendors of the product being certified.

4.2.2 The certification organization shall be primarily engaged in certification work and shall not have a monetary interest in the product's ultimate profitability.

4.2.3 The certification organization shall be accredited for personal protective equipment in accordance with ISO 65, *General requirements for bodies operating product certification systems*. The accreditation shall be issued by an accreditation body operating in accordance with ISO 17011, *General requirements for accreditation bodies accrediting conformity assessment bodies*.

4.2.4 The certification organization shall refuse to certify products to this standard that do not comply with all applicable requirements of this standard.

4.2.5* The contractual provisions between the certification organization and the manufacturer shall specify that certification is contingent on compliance with all applicable requirements of this standard.

4.2.5.1 The certification organization shall not offer or confer any conditional, temporary, or partial certifications.

4.2.5.2 Manufacturers shall not be authorized to use any label or reference to the certification organization on products that are not compliant with all applicable requirements of this standard.

4.2.6* The certification organization shall have laboratory facilities and equipment available for conducting proper tests to determine product compliance.

4.2.6.1 The certification organization laboratory facilities shall have a program in place and functioning for calibration of all instruments, and procedures shall be in use to ensure proper control of all testing.

--`,,,```-`-`,,`,,`,`,,`---

Copyright National Fire Protection Association
Provided by IHS under license with NFPA
No reproduction or networking permitted without license from IHS
Not for Resale

4.2.6.2 The certification organization laboratory facilities shall follow good practice regarding the use of laboratory manuals, form data sheets, documented calibration and calibration routines, performance verification, proficiency testing, and staff qualification and training programs.

4.2.7 The certification organization shall require the manufacturer to establish and maintain a quality assurance program that meets the requirements of Section 4.5, Manufacturers' Quality Assurance Program.

4.2.7.1* The certification organization shall require the manufacturer to have a product recall system as specified in Section 4.8, Manufacturers' Safety Alert and Product Recall Systems, as part of the manufacturer's quality assurance program.

4.2.7.2 The certification organization shall audit the manufacturer's quality assurance program to ensure that the quality assurance program provides continued product compliance with this standard.

4.2.8 The certification organization and the manufacturer shall evaluate any changes affecting the form, fit, or function of the compliant product to determine its continued certification to this standard.

4.2.9* The certification organization shall have a follow-up inspection program of the manufacturer's facilities of the compliant product with at least two random and unannounced visits per 12-month period to verify the product's continued compliance.

4.2.9.1 As part of the follow-up inspection program, the certification organization shall select sample compliant product at random from the manufacturer's production line, from the manufacturer's in-house stock, or from the open market.

4.2.9.2 Sample product shall be evaluated by the certification organization to verify the product's continued compliance in order to assure that the materials, components, and manufacturing quality assurance systems are consistent with the materials, components, and manufacturing quality assurance that were inspected and tested by the certification organization during initial certification and recertification.

4.2.9.3 The certification organization shall be permitted to conduct specific testing to verify the product's continued compliance.

4.2.9.4 For products, components, and materials where prior testing, judgment, and experience of the certification organization have shown results to be in jeopardy of not complying with this standard, the certification organization shall conduct more-frequent testing of sample product, components, and materials acquired in accordance with 4.2.9.1 against the applicable requirements of this standard.

4.2.10 The certification organization shall have in place a series of procedures, as specified in Section 4.6, Hazards Involving Compliant Product, that address report(s) of situation(s) in which a compliant product is subsequently found to be hazardous.

4.2.11 The certification organization's operating procedures shall provide a mechanism for the manufacturer to appeal decisions. The procedures shall include the presentation of information from both sides of a controversy to a designated appeals panel.

4.2.12 The certification organization shall be in a position to use legal means to protect the integrity of its name and label. The name and label shall be registered and legally defended.

4.3 Inspection and Testing.

4.3.1 For both initial certification and recertification of protective ensembles and ensemble elements, the certification organization shall conduct both inspection and testing as specified in this section.

4.3.2 All inspections, evaluations, conditioning, and testing for certification or for recertification shall be conducted by a certification organization's testing laboratory that is accredited in accordance with the requirements of ISO 17025, *General requirements for the competence of testing and calibration laboratories*.

4.3.2.1 The certification organization's testing laboratory's scope of accreditation to ISO 17025, *General requirements for the competence of testing and calibration laboratories*, shall encompass testing of personal protective equipment.

4.3.2.2 The accreditation of a certification organization's testing laboratory shall be issued by an accreditation body operating in accordance with ISO 17011, *General requirements for accreditation bodies accrediting conformity assessment bodies*.

4.3.3 A certification organization shall be permitted to utilize conditioning and testing results conducted by a product or component manufacturer for certification or recertification provided the manufacturer's testing laboratory meets the requirements specified in 4.3.3.1 through 4.3.3.5.

4.3.3.1 The manufacturer's testing laboratory shall be accredited in accordance with the requirements of ISO 17025, *General requirements for the competence of testing and calibration laboratories*.

4.3.3.2 The manufacturer's testing laboratory's scope of accreditation to ISO 17025, *General requirements for the competence of testing and calibration laboratories*, shall encompass testing of personal protective equipment.

4.3.3.3 The accreditation of a manufacturer's testing laboratory shall be issued by an accreditation body operating in accordance with ISO 17011, *General requirements for accreditation bodies accrediting conformity assessment bodies*.

4.3.3.4 The certification organization shall approve the manufacturer's testing laboratory.

4.3.3.5 The certification organization shall determine the level of supervision and witnessing of the conditioning and testing for certification or recertification conducted at the manufacturer's testing laboratory.

4.3.4 Sampling levels for testing and inspection shall be established by the certification organization and the manufacturer to ensure a reasonable and acceptable reliability at a reasonable and acceptable confidence level that products certified to this standard are compliant, unless such sampling levels are specified herein. This information shall be included in the manufacturer's technical data package.

4.3.5 Inspection by the certification organization shall include a review of all product labels to ensure that all required label attachments, compliance statements, certification statements, and other product information are at least as specified for the ensemble and ensemble elements in Section 5.1, Product Label Requirements.

4.3.6 Inspection by the certification organization shall include an evaluation of any symbols and pictorial graphic representations used on product labels or in user information, as permitted by 5.1.1.5, to ensure that the symbols are clearly explained in the product's user information package.

Copyright National Fire Protection Association
Provided by IHS under license with NFPA
No reproduction or networking permitted without license from IHS
Not for Resale

4.3.7 Inspection by the certification organization shall include a review of the user information required by Section 5.2, User Information, to ensure that the information has been developed and is available.

4.3.8 Inspection by the certification organization shall include a review of the Technical Data Package to determine compliance with the requirements of Section 5.3, Technical Data Package.

4.3.9 Inspection and evaluation by the certification organization for determining compliance with the design requirements specified in Chapter 6 shall be performed on whole or complete products.

4.3.10 Testing to determine product compliance with the performance requirements specified in Chapter 7 shall be conducted by the certification organization in accordance with the specified testing requirements of Chapter 8.

4.3.10.1 Testing shall be performed on specimens representative of materials and components used in the actual construction of the protective ensemble and ensemble element.

4.3.10.2 The certification organization also shall be permitted to use sample materials cut from a representative product.

4.3.11 The certification organization shall accept from the manufacturer, for evaluation and testing for certification, only product or product components that are the same in every respect to the actual final product or product component.

4.3.12 The certification organization shall not allow any modifications, pretreatment, conditioning, or other such special processes of the product or any product component prior to the product's submission for evaluation and testing by the certification organization.

4.3.13 The certification organization shall not allow the substitution, repair, or modification, other than as specifically permitted herein, of any product or any product component during testing.

4.3.14 The certification organization shall not allow test specimens that have been conditioned and tested for one method to be reconditioned and tested for another test method unless specifically permitted in the test method.

4.3.15 The certification organization shall test ensemble elements with the specific ensemble(s) with which they are to be certified.

4.3.16* Any change in the design, construction, or material of a compliant product shall necessitate new inspection and testing to verify compliance to all applicable requirements of this standard that the certification organization determines can be affected by such change. This recertification shall be conducted before labeling the modified product as being compliant with this standard.

4.3.17 The manufacturer shall maintain all design and performance inspection and test data from the certification organization used in the certification of the manufacturer's compliant product. The manufacturer shall provide such data, upon request, to the purchaser or authority having jurisdiction.

4.4 Annual Verification of Product Compliance.

4.4.1 All vapor-protective ensemble models and all individual element models that are labeled as being compliant with this standard shall undergo recertification on an annual basis. This recertification shall include inspection and evaluation to all design requirements and testing to all performance requirements as required by this standard on all manufacturer's models and components as required by 4.4.3.

4.4.1.1 Any change that affects the ensemble or element performance under design or performance requirements of this standard shall constitute a different model.

4.4.1.2 For the purpose of this standard, models shall include each unique pattern, style, or design of the individual element.

4.4.2 Samples of manufacturer's models and components for recertification shall be acquired from the manufacturer or component supplier during random and unannounced visits as part of the follow-up inspection program. For recertification, the certification organization shall acquire at least one complete vapor-protective ensemble sample outfitted with all manufacturer-provided external fittings. The certification organization shall also acquire a sufficient quantity of component samples to be tested for recertification as required by 4.4.3.

4.4.3 Sample vapor-protective ensembles and components shall be inspected, evaluated, and tested as follows.

4.4.3.1 Each vapor-protective ensemble shall be inspected and evaluated to each of the design requirements specified in Chapter 6.

4.4.3.2 Each vapor-protective ensemble specimen shall be tested for overall performance as specified in Section 7.1 using the following sequence of tests:

(1) The vapor-protective ensemble specimen shall be tested for gastight integrity in accordance with Section 8.2, Gastight Integrity Test.
(2) The vapor-protective ensemble specimen shall then be tested for liquidtight integrity as specified in Section 8.3, Liquidtight Integrity Test.
(3) The vapor-protective ensemble specimen shall then be tested for overall function and integrity as specified in Section 8.4, Overall Ensemble Function and Integrity Test.
(4) The vapor-protective ensemble specimen shall then be tested for airflow capacity as specified in Section 8.5, Maximum Suit Ventilation Rate Test.
(5) If certified for optional chemical flash fire protection, the vapor-protective ensemble shall then be tested for overall ensemble flash protection as specified in Section 8.27, Overall Ensemble Flash Test.

4.4.3.3 All suit material, visor, glove, footwear, optional chemical flash fire protection, and optional liquefied gas protection performance requirements shall be evaluated as specified in Chapter 5 with the following modifications:

(1) Permeation and penetration resistance testing specified in 7.2.1, 7.2.6, 7.2.8, 7.3.1, 7.3.6, 7.4.1, and 7.5.1 shall be performed against each of the following chemicals:
    (a) Carbon disulfide
    (b) Dichloromethane
    (c) Diethylamine
    (d) Methanol
    (e) Tetrahydrofuran
(2) A total of two specimens shall be permitted for testing requirements. If the testing is specified for both directions of a material, a total of two specimens per material direction shall be permitted for testing requirements.

4.4.4 The manufacturer shall maintain all design, inspection, performance, and test data from the certification organization

Copyright National Fire Protection Association
Provided by IHS under license with NFPA
No reproduction or networking permitted without license from IHS
Not for Resale

produced during the recertification of manufacturers' models and components. The manufacturer shall provide such data, upon request, to the purchaser or the authority having jurisdiction.

4.5 Manufacturers' Quality Assurance Program.

4.5.1 The manufacturer shall provide and operate a quality assurance program that meets the requirements of this section and that includes a product recall system as specified in 4.2.7.1, and Section 4.8, Manufacturers' Safety Alert and Product Recall Systems.

4.5.2 The manufacturer shall be registered to ISO 9001, *Quality management systems — requirements.*

4.5.3 The operation of the quality assurance program shall evaluate and test compliant product production against this standard to assure production remains in compliance.

4.6 Hazards Involving Compliant Product.

4.6.1* The certification organization shall establish procedures to be followed where situation(s) are reported in which a compliant product is subsequently found to be hazardous. These procedures shall comply with the provisions of ISO 27, *Guidelines for corrective action to be taken by a certification body in the event of misuse of its mark of conformity*, and as modified herein.

4.6.2* Where a report of a hazard involved with a compliant product is received by the certification organization, the validity of the report shall be investigated.

4.6.3 With respect to a compliant product, a hazard shall be a condition, or create a situation, that results in exposing life, limb, or property to an imminently dangerous or dangerous condition.

4.6.4 Where a specific hazard is identified, the determination of the appropriate action for the certification organization and the manufacturer to undertake shall take into consideration the severity of the hazard and its consequences to the safety and health of users.

4.6.5 Where it is established that a hazard is involved with a compliant product, the certification organization shall determine the scope of the hazard including products, model numbers, serial numbers, factory production facilities, production runs, and quantities involved.

4.6.6 The certification organization's investigation shall include, but not be limited to, the extent and scope of the problem as it might apply to other compliant product or compliant product components manufactured by other manufacturers or certified by other certification organizations.

4.6.7 The certification organization shall also investigate reports of a hazard where compliant product is gaining widespread use in applications not foreseen when the standard was written, such applications in turn being ones for which the product was not certified, and no specific scope of application has been provided in the standard, and no limiting scope of application was provided by the manufacturer in written material accompanying the compliant product at the point of sale.

4.6.8 The certification organization shall require the manufacturer of the compliant product, or the manufacturer of the compliant product component if applicable, to assist the certification organization in the investigation and to conduct its own investigation as specified in Section 4.7, Manufacturers' Investigation of Complaints and Returns.

4.6.9 Where the facts indicating a need for corrective action are conclusive and the certification organization's appeal procedures referenced in 4.2.11 have been followed, the certification organization shall initiate corrective action immediately, provided there is a manufacturer to be held responsible for such action.

4.6.10 Where the facts are conclusive and corrective action is indicated, but there is no manufacturer to be held responsible, such as when the manufacturer is out of business or the manufacturer is bankrupt, the certification organization shall immediately notify relevant governmental and regulatory agencies and issue a notice to the user community about the hazard.

4.6.11* Where the facts are conclusive and corrective action is indicated, the certification organization shall take one or more of the following corrective actions:

(1) Notification of parties authorized and responsible for issuing a safety alert when, in the opinion of the certification organization, such a notification is necessary to inform the users.
(2) Notification of parties authorized and responsible for issuing a product recall when, in the opinion of the certification organization, such a recall is necessary to protect the users.
(3) Removal of the mark of certification from the product.
(4) Where a hazardous condition exists and it is not practical to implement (1), (2), or (3); or the responsible parties refuse to take corrective action, the certification organization shall notify relevant governmental and regulatory agencies and issue a notice to the user community about the hazard.

4.6.12 The certification organization shall provide a report to the organization or individual identifying the reported hazardous condition and notify them of the corrective action indicated, or that no corrective action is indicated.

4.6.13* Where a change to an NFPA standard(s) is felt to be necessary, the certification organization shall also provide a copy of the report and corrective actions indicated to the NFPA, and shall also submit either a Public Proposal for a proposed change to the next revision of the applicable standard or a proposed Temporary Interim Amendment (TIA) to the current edition of the applicable standard.

4.7 Manufacturers' Investigation of Complaints and Returns.

4.7.1 Manufacturers shall provide corrective action in accordance with ISO 9001, *Quality management systems — requirements*, for investigating written complaints and returned products.

4.7.2 Manufacturers' records of returns and complaints related to safety issues shall be retained for at least 5 years.

4.7.3 Where the manufacturer discovers, during the review of specific returns or complaints, that a compliant product or compliant product component can constitute a potential safety risk to end users that is possibly subject to a safety alert or product recall, the manufacturer shall immediately contact the certification organization and provide all information about their review to assist the certification organization with their investigation.

4.8 Manufacturers' Safety Alert and Product Recall Systems.

4.8.1 Manufacturers shall establish a written safety alert system and a written product recall system that describes the procedures to be used in the event that it decides, or is directed by the certification organization, to either issue a safety alert or conduct a product recall.

--`,,```-`-`,,`,,`,`,,`---
Copyright National Fire Protection Association
Provided by IHS under license with NFPA
No reproduction or networking permitted without license from IHS
Not for Resale

4.8.2 The manufacturers' safety alert and product recall system shall provide the following:

(1) The establishment of a coordinator and responsibilities by the manufacturer for the handling of safety alerts and product recalls
(2) A method of notifying all dealers, distributors, purchasers, users, and the NFPA about the safety alert or product recall that can be initiated within a 1-week period following the manufacturer's decision to issue a safety alert or conduct a product recall, or after the manufacturer has been directed by the certification organization to issue a safety alert or conduct a product recall
(3) Techniques for communicating accurately and understandably the nature of the safety alert or product recall and in particular the specific hazard or safety issue found to exist
(4) Procedures for removing product that is recalled and documenting the effectiveness of the product recall
(5) A plan for either repairing, replacing, or compensating purchasers for returned product

Chapter 5 Labeling and Information

5.1 Product Label Requirements.

5.1.1 General.

5.1.1.1 Each vapor protective ensemble shall have a product label permanently and conspicuously attached to the innermost surface of the ensemble when the ensemble is properly assembled with all layers, components, and parts in place.

5.1.1.2 Each glove and footwear element shall have a product label attached to the element, or printed upon or inserted in the smallest unit of packaging of that element.

5.1.1.3 Multiple label pieces shall be permitted in order to carry all statements and information required to be on the product label; however, all label pieces comprising the entire product label shall be located adjacent to each other.

5.1.1.4 All worded portions of the required product label shall at least be in English.

5.1.1.5 Symbols and other pictorial graphic representations shall be permitted to be used to supplement worded statements on the product label(s) where such symbols and other pictorial graphic representations are clearly explained in the user information.

5.1.1.6 The certification organization's label, symbol, or identifying mark shall be legibly printed on the product label. All letters shall be at least 2.5 mm (3⁄32 in.) high.

5.1.1.7 The compliance statements and information specified in 5.1.2 and 5.1.3, as applicable for the specific ensemble or ensemble element, shall be legibly printed on the product label. All letters shall be at least 3 mm (1⁄8 in.) high.

5.1.1.8 In addition to the compliance statements and information specified in 5.1.1.6, at least the following information shall also be printed legibly on the product label(s). All letters shall be at least 2 mm (1⁄16 in.) high.

(1) Manufacturer's name, identification, or designation
(2) Manufacturer's address
(3) Country of manufacture
(4) Suit model, style, or serial number
(5) Date of compliance testing to ASTM F 1052, *Standard Test Method for Pressure Testing of Vapor-Protective Ensembles*
(6) Size
(7) Suit, glove, footwear material(s), as applicable
(8) Visor material(s) for suits
(9) Glove component for ensemble
(10) Footwear component for ensemble

5.1.1.9* Where detachable components of a vapor-protective ensemble element, including, but not limited to, such components as outer garments, outer gloves, or outer boots, must be worn with a vapor-protective ensemble element in order for the ensemble element to be compliant with this standard, at least the following statement and information shall also be printed legibly on the product label of the ensemble and the product label for each glove and footwear element. All letters shall be at least 2.5 mm (3⁄32 in.) high. The appropriate term "ensemble" or "element" shall be inserted where indicated in the label text. The detachable component(s) shall be listed following this statement by type, identification, and how properly worn.

"FOR COMPLIANCE WITH NFPA 1991, THE FOLLOWING COMPONENTS MUST BE WORN IN CONJUNCTION WITH THIS VAPOR-PROTECTIVE (insert the term 'ENSEMBLE' or 'ENSEMBLE ELEMENT' here): (List detachable components here.)"

5.1.1.10 Detachable components specified in 5.1.1.9 shall meet the label requirements specified in ASTM F 1301, *Standard Practice for Labeling Chemical Protective Clothing*. The label shall also meet the requirements of 5.1.1 through 5.1.1.5.

5.1.2 Ensemble Compliance Statements.

5.1.2.1 Each vapor-protective ensemble shall have at least the following compliance statement and information on the product label.

"THIS VAPOR-PROTECTIVE ENSEMBLE MEETS THE REQUIREMENTS OF NFPA 1991, STANDARD ON VAPOR-PROTECTIVE ENSEMBLES FOR HAZARDOUS MATERIALS EMERGENCIES, 2005 EDITION, AND ANY ADDITIONAL REQUIREMENTS NOTED BELOW.

THE TECHNICAL DATA PACKAGE CONTAINS INFORMATION ON CHEMICALS AND SPECIFIC CHEMICAL MIXTURES FOR WHICH THIS ENSEMBLE IS CERTIFIED. CONSULT TECHNICAL DATA PACKAGE AND MANUFACTURER'S INSTRUCTIONS BEFORE USE. DO NOT REMOVE THIS LABEL."

ADDITIONAL REQUIREMENTS	YES	NO
LIMITED CHEMICAL FLASH FIRE PROTECTION *FOR ESCAPE ONLY* IN THE EVENT OF A CHEMICAL FLASH FIRE		
LIQUEFIED GAS PROTECTION		

Copyright National Fire Protection Association
Provided by IHS under license with NFPA
No reproduction or networking permitted without license from IHS
Not for Resale

5.1.2.2 Where the ensemble provides the optional additional protection, the YES box shall be marked for the additional requirement.

5.1.2.3 Where the ensemble does not provide the optional additional protection, the NO box shall be marked.

5.1.3 Ensemble Element Compliance Statements.

5.1.3.1 Each ensemble element shall have at least the following compliance statement and information on the product label. The appropriate term "glove" or "footwear" shall be inserted where indicated in the label text.

"THIS (insert the element name 'GLOVE' or 'FOOTWEAR' here) ELEMENT MEETS THE REQUIREMENTS OF NFPA 1991, STANDARD ON VAPOR-PROTECTIVE ENSEMBLES FOR HAZARDOUS MATERIALS EMERGENCIES, 2005 EDITION, AND ANY ADDITIONAL REQUIREMENTS AS NOTED BELOW.

THE TECHNICAL DATA PACKAGE CONTAINS INFORMATION ON CHEMICALS AND SPECIFIC CHEMICAL MIXTURES FOR WHICH THIS (insert the element name 'GLOVE' or 'FOOTWEAR' here) IS CERTIFIED. CONSULT THE TECHNICAL DATA PACKAGE AND MANUFACTURER'S INSTRUCTIONS BEFORE USE.
DO NOT REMOVE THIS LABEL."

ADDITIONAL REQUIREMENTS	YES	NO
LIMITED CHEMICAL FLASH FIRE PROTECTION *FOR ESCAPE ONLY* IN THE EVENT OF A CHEMICAL FLASH FIRE		
LIQUEFIED GAS PROTECTION		

5.1.3.2 Where the ensemble element provides one or both optional additional protection, the YES or NO box shall be marked as appropriate for the additional requirement.

5.1.3.3 Where the ensemble element does not provide any optional additional protection above the basic requirements of this standard, the NO boxes shall be marked for both additional requirements.

5.2* User Information.

5.2.1 The manufacturer shall provide user information including, but not limited to, warnings, information, and instructions with each vapor-protective ensemble and each element.

5.2.2 The manufacturer shall attach the required user information, or packaging containing the user information, to the vapor-protective ensemble or ensemble element in such a manner that it is not possible to use the ensemble or element without being aware of the availability of the information.

5.2.3 The required user information, or packaging containing the user information, shall be attached to the vapor-protective ensemble or ensemble element so that a deliberate action is necessary to remove it. The manufacturer shall provide notice that the user information is to be removed ONLY by the end user.

5.2.4 The manufacturer shall provide at least the following instructions and information with each vapor-protective ensemble and each element:

(1) Pre-use information as follows:
  (a) Safety considerations
  (b) Limitations of use
  (c) Marking recommendations and restrictions
  (d) A statement that most performance properties of the vapor-protective ensemble or ensemble element cannot be tested by the user in the field
  (e) Closure lubricants, if applicable
  (f) Suit visor antifog agents or procedures
  (g) Recommended undergarments
  (h) Shelf life
  (i) Warranty information
(2) Preparation for use as follows:
  (a) Sizing/adjustment
  (b) Recommended storage practices
(3) Inspection frequency and details
(4) Don/doff information as follows:
  (a) Donning and doffing procedures
  (b) Sizing and adjustment procedures
  (c) Interface issues
(5) Proper use consistent with NFPA 1500, *Standard on Fire Department Occupational Safety and Health Program*, and 29 CFR 1910.132
(6) Maintenance and cleaning information as follows:
  (a) Cleaning instructions and precautions with a statement advising users not to use garments that are not thoroughly cleaned and dried
  (b) Inspection details
  (c) Maintenance criteria and methods of repair, where applicable
  (d) Decontamination procedures for both chemical and biological contamination
(7) Retirement and disposal criteria and consideration

5.2.5* Vapor-protective ensemble and ensemble element manufacturers shall furnish a log book with each ensemble and element along with instructions on the log book's proper completion and maintenance.

5.2.6 The manufacturer shall state the storage life for each vapor-protective ensemble and each element.

5.3 Technical Data Package.

5.3.1 General.

5.3.1.1* The manufacturer shall furnish a technical data package with each vapor-protective ensemble and each element.

5.3.1.2* The technical data package shall contain all documentation required by this standard and the data showing compliance with this standard.

5.3.1.3 In the technical data package, the manufacturer shall describe the vapor-protective ensemble or ensemble elements in terms of manufacturer trade name, model number, manufacturer replaceable components and component parts, and available options such as accessories, testing devices, and sizes.

Copyright National Fire Protection Association
Provided by IHS under license with NFPA
No reproduction or networking permitted without license from IHS
Not for Resale

5.3.1.4* In the technical data package, the manufacturer shall describe the available sizes of the vapor-protective ensemble. Descriptions of sizes shall include the range in height and weight for persons fitting each particular size and shall provide information to the wearer as to whether these sizes apply to persons wearing SCBA, hard hats, communications devices, structural fire-fighting protective clothing, and other similar clothing or equipment.

5.3.2 Material and Component Descriptions.

5.3.2.1 Where specific clothing items, equipment, or component parts are required for certifying the vapor-protective ensemble or ensemble element as compliant with this standard, the manufacturer shall list these clothing items, equipment, or component parts in the technical data package.

5.3.2.2 The manufacturer shall provide, in the technical data package, the list and descriptions of the following ensemble or individual element materials and component parts, where applicable:

(1) Suit material
(2) Visor material
(3) Glove material and type of attachment
(4) Footwear material and type of attachment
(5) Zipper/closure type and materials
(6) Material seam types and composition
(7) Exhaust valve types and material(s)
(8) External fitting types and material(s)
(9) External gasket types and material(s)
(10) Outer suit, glove, or boot material(s)
(11) Type or style of head protection accommodated within the suit

5.3.2.3 All descriptions of material composition shall specify either the generic material names or trade names if the composition of the material is proprietary.

5.3.2.4 Where applicable, the descriptions of respective vapor-protective ensemble materials, element materials, and component part materials shall include the following information:

(1) Visor material information such as the availability of any permanent detachable covers and films
(2) Glove information as follows:
  (a) Type of linings or surface treatments
  (b) Available glove sizes and sizing information
(3) Footwear information as follows:
  (a) Type of linings or surface treatments
  (b) Type of soles or special toe reinforcements
  (c) Available footwear sizes
(4) Suit zipper or closure information as follows:
  (a) The material(s) of construction for the closure (including chain, slide, pull, and tape for zippers)
  (b) The location and the length of the completed closure assembly
  (c) A description of any protective covers for flaps
(5) Suit exhaust valves or ports information as follows:
  (a) Type, such as flapper, pressure demand
  (b) Number and method of attachment to the suit
  (c) A description of any protective covers or pockets
(6) Other clothing items (e.g., outer garments) information such as the type and how used with protective suit

5.3.2.5 The manufacturer shall describe, in the technical data package, the type of seams or methods of attachment for the following ensemble material and component combinations:

(1) Suit material–suit material
(2) Suit material–visor
(3) Suit material–glove
(4) Suit material–footwear
(5) Suit material–suit closure
(6) Outer cover–outer cover

Chapter 6 Design Requirements

6.1 Vapor-Protective Ensemble Design Requirements.

6.1.1 Vapor-protective ensembles shall be designed and configured to protect the wearer's torso, head, arms, legs, hands, and feet, and shall completely enclose the wearer.

6.1.2 Vapor-protective ensembles shall consist of a suit with hood, gloves, and footwear.

6.1.2.1 The suit hood shall be provided with a visor that is designed to allow the wearer to see outside the vapor-protective ensemble.

6.1.2.2 The visor shall be constructed of a transparent material that qualifies as a chemical-protective layer.

6.1.2.3 Vapor-protective ensembles shall be permitted to be constructed using an outer garment designed to be worn over the suit element where such additional garments are necessary to meet the suit ensemble element requirements of this standard.

6.1.2.4 Vapor-protective ensembles shall be permitted to be constructed using an outer glove designed to be worn over the glove element where such additional gloves are necessary to meet the glove element requirements of this standard.

6.1.2.5 Vapor-protective ensembles shall be permitted to be constructed using an outer boot designed to be worn over a footwear element or bootie where such additional boots are necessary to meet the footwear element requirements of this standard.

6.1.3 Other than outer gloves and outer boots, vapor-protective ensembles shall be designed so that all separate components are securely attached and provided as a single and integrated unit.

6.1.4 Vapor-protective ensembles shall be offered in at least four unique and different sizes.

6.1.5* Vapor-protective ensembles shall be equipped with an exhaust valve(s).

6.1.5.1 Exhaust valves shall be one-way valves.

6.1.5.2 The one-way valves shall be designed to release exhaust air from the inside of the vapor-protective ensemble to the outside environment through the exhaust valve, and shall prevent entry of contaminated air into the vapor-protective ensemble from the outside environment through the exhaust valve.

6.1.6 The mounting mechanism of exhaust valves shall be designed to allow their removal and reinstallation or replacement, for inspection, from the vapor-protective ensemble.

6.1.7 The vapor-protective ensemble suit with hood and visor, gloves, and footwear shall be constructed using primary

Copyright National Fire Protection Association
Provided by IHS under license with NFPA
No reproduction or networking permitted without license from IHS
Not for Resale

material that shall provide the protection from chemical and physical hazards. The primary material shall include the chemical-protective layer that can be configured as a separate layer or as a composite.

6.1.8 The chemical-protective layer shall be designed to provide permeation resistance to chemicals and gastight integrity for the vapor-protective ensemble.

6.1.8.1 The chemical-protective layer shall be considered as primary material and shall be permitted to be configured as a separate layer or as a composite with other primary materials.

6.1.8.2 The chemical-protective layer shall be permitted to depend on the other primary material to provide the physical protection.

6.1.9 Protective covers or pockets constructed using the suit's primary material shall be provided to protect the exhaust valves from direct chemical splashes to the seat of the exhaust valve(s). The pockets or covers shall allow access to the valves for removal and inspection.

6.1.10 All external hardware and fittings shall be free of rough spots, burrs, or sharp edges that could tear materials.

6.2 Vapor-Protective Glove Element Design Requirements.

6.2.1 Glove elements shall be designed and configured to protect the wearer's hands and wrists.

6.2.2 Glove elements shall provide protection from the finger tips to at least 25 mm (1 in.) beyond the wrist crease.

6.2.3 Glove elements shall be constructed using primary material that shall provide the protection from chemical and physical hazards. The primary material shall include the chemical-protective layer that can be configured as a separate layer or as a composite.

6.2.4 The glove chemical-protective layer shall be designed to provide permeation resistance to chemicals and gastight integrity for the vapor-protective glove.

6.2.4.1 The glove chemical-protective layer shall be considered as primary material and shall be permitted to be configured as a separate layer or as a composite with other primary materials.

6.2.4.2 The glove chemical-protective layer shall be permitted to depend on the other primary material to provide the physical protection.

6.2.5 Glove elements shall be permitted to be constructed using an outer glove designed to be worn over the primary glove where such additional gloves are necessary to meet the glove element requirements of this standard.

6.2.6 The interface of glove element to vapor-protective suit sleeve interface shall be designed to permit removal and replacement of the gloves attached to each suit sleeve within 30 minutes.

6.2.7 All external hardware and fittings shall be free of rough spots, burrs, or sharp edges that could tear materials.

6.3 Vapor-Protective Footwear Element Design Requirements.

6.3.1 Footwear elements shall be designed and configured to provide protection to the feet and ankles.

6.3.2 Footwear elements shall provide protection not less than 200 mm (8 in.) in height when measured from the plane of the sole bottom.

6.3.3 Booties, where provided, shall be designed as an extension of the chemical protective suit leg, shall cover the entire foot and ankle, and shall provide protection to the feet when worn in conjunction with an outer boot.

6.3.4 Footwear elements shall be constructed using primary material that shall provide the protection from chemical and physical hazards. The primary material shall include the chemical-protective layer that can be configured as a separate layer or as a composite.

6.3.5 The footwear chemical-protective layer shall be designed to provide permeation resistance to chemicals and gastight integrity for the vapor-protective footwear.

6.3.5.1 The footwear chemical-protective layer shall be considered as primary material and shall be permitted to be configured as a separate layer or as a composite with other primary materials.

6.3.5.2 The footwear chemical-protective layer shall be permitted to depend on the other primary material to provide the physical protection.

6.3.6 Footwear elements shall be permitted to be constructed using an outer boot designed to be worn over the primary footwear or bootie where such additional boots are necessary to meet the footwear element requirements of this standard.

6.3.7 All external hardware and fittings shall be free of rough spots, burrs, or sharp edges that could tear materials.

6.3.8 Metal parts shall not penetrate from the outside into the lining or insole at any point.

6.3.9 No metal parts, including but not limited to nails or screws, shall be present or utilized in the construction or attachment of the sole (with heel) to the puncture-resistant device, insole, or upper.

Chapter 7 Performance Requirements

7.1 Vapor-Protective Ensemble Performance Requirements.

7.1.1 Vapor-protective ensembles shall be tested for overall function as specified in Section 8.3, Liquidtight Integrity Test, and ensembles shall allow no liquid penetration; where outer gloves are designed to be worn in conjunction with gloves attached to the ensemble, the outer gloves shall not collect liquid; and where outer boots are designed to be worn in conjunction with garment booties, the outer boots shall not collect liquid.

7.1.2 Ensembles shall be tested for overall function and integrity as specified in Section 8.4, Overall Ensemble Function and Integrity Test, and shall meet the following performance criteria:

(1) Ensembles shall have an ending pressure of at least 80 mm (3 5/32 in.) water gauge pressure upon completion of the functional test.
(2) Ensembles shall allow the test subject to complete all tasks while wearing a head-protective device.
(3) Ensembles shall permit the test subject to see through the combination of respiration and ensemble visor with a visual acuity of 20/35 or better.
(4) Ensembles shall permit the test subject to remove and reinsert their hand into the glove system 5 times sequentially.

Copyright National Fire Protection Association
Provided by IHS under license with NFPA
No reproduction or networking permitted without license from IHS
Not for Resale

7.1.3 Ensembles shall be tested for airflow capacity as specified in Section 8.5, Maximum Suit Ventilation Rate Test, and shall exhibit no internal pressures greater than 100 mm (4 in.) water gauge pressure, and shall show an ending pressure of at least 80 mm (3⅛ in.) water gauge pressure after subsequent testing for gastight integrity as specified in Section 8.2, Gastight Integrity Test.

7.1.4 Ensembles on which external fittings are installed that penetrate any primary materials shall be tested for gastight integrity as specified in Section 8.2, Gastight Integrity Test, and show an ending pressure of at least 80 mm (3⅛ in.) water gauge.

7.1.5 Exhaust valves installed in vapor-protective ensembles shall be tested for mounting strength as specified in Section 8.9, Exhaust Valve Mounting Strength Test, and shall have a failure force greater than 135 N (30 lbf).

7.1.6 External fittings installed in vapor-protective ensembles shall be tested for pull-out strength as specified in Section 8.13, Fitting Pull Out Strength Test, and shall have a failure force greater than 1000 N (225 lbf).

7.1.7 Exhaust valves installed in vapor-protective ensembles shall be tested for inward leakage as specified in Section 8.26, Exhaust Valve Inward Leakage Test, and shall not exhibit a leakage rate exceeding 30 ml/min (1.83 $in.^3$/min).

7.2 Vapor-Protective Suit Element Performance Requirements.

7.2.1 Suit materials shall be tested for permeation resistance after flexing and abrading as specified in Section 8.6, Chemical Permeation Resistance Test, and shall not exhibit a breakthrough detection time of 1 hour or less for the following list of industrial chemicals:

(1) Acetone
(2) Acetonitrile
(3) Anhydrous ammonia (gas)
(4) 1,3-Butadiene (gas)
(5) Carbon disulfide
(6) Chlorine (gas)
(7) Dichloromethane
(8) Diethyl amine
(9) Dimethyl formamide
(10) Ethyl acetate
(11) Ethylene oxide (gas)
(12) Hexane
(13) Hydrogen chloride (gas)
(14) Methanol
(15) Methyl chloride (gas)
(16) Nitrobenzene
(17) Sodium hydroxide
(18) Sulfuric acid
(19) Tetrachloroethylene
(20) Tetrahydrofuran
(21) Toluene

7.2.1.1 Suit materials shall be tested for permeation resistance after flexing and abrading as specified in Section 8.6, Chemical Permeation Resistance Test, and shall not exhibit a breakthrough detection time of 1 hour or less for each additional chemical or specific chemical mixture for which the manufacturer is certifying the ensemble.

7.2.2 Suit materials shall be tested for resistance to flame impingement as specified in Section 8.7, Flammability Resistance Test, and shall not ignite during the initial 3-second exposure period, shall not burn a distance of greater than 100 mm (4 in.), shall not sustain burning for more than 10 seconds, and shall not melt as evidenced by flowing or dripping during the subsequent 12-second exposure period.

7.2.3 Suit material shall be tested for bursting strength as specified in Section 8.10, Burst Strength Test, and shall have a bursting strength greater than 200 N (45 lbf).

7.2.4 Suit materials shall be tested for puncture propagation tear resistance as specified in Section 8.11, Puncture Propagation Tear Resistance Test, and shall have a puncture propagation tear resistance greater than 49 N (11 lbf).

7.2.5 Suit materials shall be tested for cold weather performance as specified in Section 8.12, Cold Temperature Performance Test One, and shall not have a bending moment greater than 0.057 N × m (0.5 in.-lbf) at an angular deflection of 60 degrees at –25°C (–13°F).

7.2.6 Suit seams shall be tested for permeation resistance as specified in Section 8.6, Chemical Permeation Resistance Test, and shall not exhibit a breakthrough detection time of 1 hour or less for the following list of industrial chemicals:

(1) Acetone
(2) Acetonitrile
(3) Anhydrous ammonia (gas)
(4) 1,3-Butadiene (gas)
(5) Carbon disulfide
(6) Chlorine (gas)
(7) Dichloromethane
(8) Diethyl amine
(9) Dimethyl formamide
(10) Ethyl acetate
(11) Ethylene oxide (gas)
(12) Hexane
(13) Hydrogen chloride (gas)
(14) Methanol
(15) Methyl chloride (gas)
(16) Nitrobenzene
(17) Sodium hydroxide
(18) Sulfuric acid
(19) Tetrachloroethylene
(20) Tetrahydrofuran
(21) Toluene

7.2.6.1 Suit seams shall be tested for permeation resistance as specified in Section 8.6, Chemical Permeation Resistance Test, and shall not exhibit a breakthrough detection time of 1 hour or less for each additional chemical or specific chemical mixture for which the manufacturer is certifying the ensemble.

7.2.7 Suit seams shall be tested for seam strength as specified in Section 8.24, Seam/Closure Breaking Strength Test, and shall have a breaking strength greater than 2.88 kN/m (30 lbf/2 in.).

7.2.8 Suit closure assemblies shall be tested for penetration resistance as specified in Section 8.25, Closure Penetration Resistance Test, and shall not exhibit a breakthrough detection time of 1 hour or less for the following industrial chemicals:

(1) Acetone
(2) Acetonitrile
(3) Carbon disulfide
(4) Dichloromethane
(5) Diethyl amine

Copyright National Fire Protection Association
Provided by IHS under license with NFPA
No reproduction or networking permitted without license from IHS
Not for Resale

(6) Dimethyl formamide
(7) Ethyl acetate
(8) Hexane
(9) Methanol
(10) Nitrobenzene
(11) Sodium hydroxide
(12) Sulfuric acid
(13) Tetrachloroethylene
(14) Tetrahydrofuran
(15) Toluene

7.2.8.1 Suit closure assemblies shall be tested for chemical penetration resistance as specified in Section 8.25, Closure Penetration Resistance Test, and for any additional chemicals or specific chemical mixtures for which the manufacturer is certifying the suit.

7.2.9 Suit closure assemblies shall be tested for closure strength as specified in Section 8.24, Seam/Closure Breaking Strength Test, and shall have a breaking strength greater than 2.88 kN/m (30 lbf/2 in.).

7.3 Vapor-Protective Suit Element Visor Performance Requirements.

7.3.1 Visor materials shall be tested for permeation resistance after flexing and abrading as specified in Section 8.6, Chemical Permeation Resistance Test, and shall not exhibit a breakthrough detection time of 1 hour or less for the following list of industrial chemicals:

(1) Acetone
(2) Acetonitrile
(3) Anhydrous ammonia (gas)
(4) 1,3-Butadiene (gas)
(5) Carbon disulfide
(6) Chlorine (gas)
(7) Dichloromethane
(8) Diethyl amine
(9) Dimethyl formamide
(10) Ethyl acetate
(11) Ethylene oxide (gas)
(12) Hexane
(13) Hydrogen chloride (gas)
(14) Methanol
(15) Methyl chloride (gas)
(16) Nitrobenzene
(17) Sodium hydroxide
(18) Sulfuric acid
(19) Tetrachloroethylene
(20) Tetrahydrofuran
(21) Toluene

7.3.1.1 Visor materials shall be tested for permeation resistance as specified in Section 8.6, Chemical Permeation Resistance Test, and shall not exhibit breakthrough detection time of 1 hour or less, and shall not exhibit a breakthrough detection time of 1 hour or less for each additional chemical or specific chemical mixture for which the manufacturer is certifying the ensemble.

7.3.2 Visor materials shall be tested for resistance to flame impingement as specified in Section 8.7, Flammability Resistance Test, and shall not ignite during the initial 3-second exposure period, shall not burn a distance of greater than 100 mm (4 in.), shall not sustain burning for more than 10 seconds, and shall not melt as evidenced by flowing or dripping during the subsequent 12-second exposure period.

7.3.3 Visor materials shall be tested for bursting strength as specified in Section 8.10, Burst Strength Test, and shall have a bursting strength of not less than 200 N (45 lbf).

7.3.4 Visor materials shall be tested for puncture propagation tear resistance as specified in Section 8.11, Puncture Propagation Tear Resistance Test, and shall have a puncture propagation tear resistance of not less than 49 N (11 lbf).

7.3.5 Visor materials shall be tested for cold temperature bending as specified in Section 8.14, Cold Temperature Performance Test Two, and shall not crack or show evidence of visible damage.

7.3.6 Visor material seams shall be tested for permeation resistance as specified in Section 8.6, Chemical Permeation Resistance Test, and shall not exhibit a breakthrough detection time of 1 hour or less for the following list of industrial chemicals:

(1) Acetone
(2) Acetonitrile
(3) Anhydrous ammonia (gas)
(4) 1,3-Butadiene (gas)
(5) Carbon disulfide
(6) Chlorine (gas)
(7) Dichloromethane
(8) Diethyl amine
(9) Dimethyl formamide
(10) Ethyl acetate
(11) Ethylene oxide (gas)
(12) Hexane
(13) Hydrogen chloride (gas)
(14) Methanol
(15) Methyl chloride (gas)
(16) Nitrobenzene
(17) Sodium hydroxide
(18) Sulfuric acid
(19) Tetrachloroethylene
(20) Tetrahydrofuran
(21) Toluene

7.3.6.1 Visor material seams shall be tested for permeation resistance as specified in Section 8.6, Chemical Permeation Resistance Test, and shall not exhibit a normalized breakthrough detection time of 1 hour or less, and shall not exhibit a breakthrough detection time of 1 hour or less for each additional chemical or specific chemical mixture for which the manufacturer is certifying the ensemble.

7.3.7 Visor material seams shall be tested for seam strength as specified in Section 8.24, Seam/Closure Breaking Strength Test, and shall have a breaking strength of not less than 2.88 kN/m (30 lbf/2 in.).

7.4 Vapor-Protective Glove Element Performance Requirements.

7.4.1 Glove materials shall be tested for permeation resistance after flexing and abrading as specified in Section 8.6, Chemical Permeation Resistance Test, and shall not exhibit a breakthrough detection time of 1 hour or less for the following list of industrial chemicals:

(1) Acetone
(2) Acetonitrile
(3) Anhydrous ammonia (gas)
(4) 1,3-Butadiene (gas)
(5) Carbon disulfide
(6) Chlorine (gas)

Copyright National Fire Protection Association
Provided by IHS under license with NFPA
No reproduction or networking permitted without license from IHS
Not for Resale

(7) Dichloromethane
(8) Diethyl amine
(9) Dimethyl formamide
(10) Ethyl acetate
(11) Ethylene oxide (gas)
(12) Hexane
(13) Hydrogen chloride (gas)
(14) Methanol
(15) Methyl chloride (gas)
(16) Nitrobenzene
(17) Sodium hydroxide
(18) Sulfuric acid
(19) Tetrachloroethylene
(20) Tetrahydrofuran
(21) Toluene

7.4.1.1 Glove materials shall be tested for permeation resistance after flexing and abrading as specified in Section 8.6, Chemical Permeation Resistance Test, and shall not exhibit a breakthrough detection time of 1 hour or less, and shall not exhibit a breakthrough detection time of 1 hour or less for each additional chemical or specific chemical mixture for which the manufacturer is certifying the ensemble.

7.4.2 Glove materials shall be tested for resistance to flame impingement as specified in Section 8.7, Flammability Resistance Test, and shall not ignite during the initial 3-second exposure period, shall not burn a distance of greater than 100 mm (4 in.), shall not sustain burning for more than 10 seconds, and shall not melt as evidenced by flowing or dripping during the subsequent 12-second exposure period.

7.4.3 Glove materials shall be tested for cut resistance as specified in Section 8.15, Cut Resistance Test, and shall have a blade travel distance of not less than 25 mm (1 in.).

7.4.4 Glove materials shall be tested for puncture resistance as specified in Section 8.16, Puncture Resistance Test One, and shall have a puncture resistance of not less than 22 N (5 lbf).

7.4.5 Glove materials shall be tested for cold weather performance as specified in Section 8.12, Cold Temperature Performance Test One, and shall have a bending moment of 0.057 N × m (½ in.-lbf) at an angular deflection of 60 degrees and −25°C (−13°F).

7.4.6* Gloves shall be tested for dexterity as specified in Section 8.17, Glove Hand Function Test, and shall have an average percent increase of barehand control of less than 600 percent.

7.5 Vapor-Protective Footwear Element Performance Requirements.

7.5.1 Footwear upper materials shall be tested for permeation resistance after flexing and abrading as specified in Section 8.6, Chemical Permeation Resistance Test, and shall not exhibit a breakthrough detection time of 1 hour or less for the following list of industrial chemicals:

(1) Acetone
(2) Acetonitrile
(3) Anhydrous ammonia (gas)
(4) 1,3-Butadiene (gas)
(5) Carbon disulfide
(6) Chlorine (gas)
(7) Dichloromethane
(8) Diethyl amine
(9) Dimethyl formamide
(10) Ethyl acetate
(11) Ethylene oxide (gas)
(12) Hexane
(13) Hydrogen chloride (gas)
(14) Methanol
(15) Methyl chloride (gas)
(16) Nitrobenzene
(17) Sodium hydroxide
(18) Sulfuric acid
(19) Tetrachloroethylene
(20) Tetrahydrofuran
(21) Toluene

7.5.1.1 Footwear upper materials shall be tested for permeation resistance after flexing and abrading as specified in Section 8.6, Chemical Permeation Resistance Test, and shall not exhibit a breakthrough detection time of 1 hour or less, and shall not exhibit a breakthrough detection time of 1 hour or less for each additional chemical or specific chemical mixture for which the manufacturer is certifying the ensemble.

7.5.2 Footwear upper materials shall be tested for resistance to flame impingement as specified in Section 8.7, Flammability Resistance Test, and shall not ignite during the initial 3-second exposure period, shall not burn a distance of greater than 100 mm (4 in.), shall not sustain burning for more than 10 seconds, and shall not melt as evidenced by flowing or dripping during the subsequent 12-second exposure period.

7.5.3 Footwear upper materials shall be tested for cut resistance as specified in Section 8.15, Cut Resistance Test, and have a blade travel distance of not less than 25 mm (1 in.).

7.5.4 Footwear upper materials shall be tested for puncture resistance as specified in Section 8.16, Puncture Resistance Test One, and have a puncture resistance of not less than 36 N (8 lbf).

7.5.5 Footwear toes shall be tested for impact and compression resistance as specified in Section 8.21, Impact and Compression Test, and shall have an impact resistance of not less than 101.7 J (75 ft-lb), and shall have a compression resistance of not less than 11,121 N (2500 lbf).

7.5.6 Footwear soles and heels shall be tested for puncture resistance as specified in Section 8.19, Puncture Resistance Test Two, and shall have a puncture resistance of not less than 1210 N (272 lbf).

7.5.7 Footwear soles and heels shall be tested for abrasion resistance as specified in Section 8.20, Abrasion Resistance Test, and have an abrasion resistance rating of not less than 65.

7.5.8 Footwear soles or ladder shanks shall be tested for bending resistance as specified in Section 8.22, Ladder Shank Bend Resistance Test, and shall not deflect more than 6 mm (¼ in.).

7.5.9 Footwear soles shall be tested for slip resistance as specified in Section 8.23, Slip Resistance Test, and shall have a static coefficient of 0.75 or greater.

7.6 Vapor-Protective Ensemble and Ensemble Element CBRN Protection Performance Requirements for Terrorism Incidents.

7.6.1 Primary suit, glove, and footwear element materials and seams shall be tested for permeation resistance as specified in Section 8.6, Chemical Permeation Resistance Test, and shall not exhibit normalized breakthrough detection times of 60 minutes or less for the following list of industrial chemicals:

Copyright National Fire Protection Association
Provided by IHS under license with NFPA
No reproduction or networking permitted without license from IHS
Not for Resale

(1) Cyanogen chloride (CK; 506-77-4)
(2) Carbonyl chloride (CG; 75-44-5)
(3) Dimethyl sulfate (DMA, sulfuric acid dimethyl ester; 77-78-1)
(4) Hydrogen cyanide (AC, HCN, CAS; 74-90-8)

7.6.2 Primary suit, glove, and footwear materials and seams shall be tested for permeation resistance as specified in Section 8.6, Chemical Permeation Resistance Test, and shall not exceed a cumulative permeation of 1.25 $\mu g/cm^2$ for the chemical warfare agent sarin (GB, or isopropyl methyl phosphonofluoridate).

7.6.3 Primary suit, glove, and footwear materials and seams shall be tested for permeation resistance as specified in Section 8.6, Chemical Permeation Resistance Test, and shall not exceed a cumulative permeation of 4 $\mu g/cm^2$ for the chemical warfare agent sulfur mustard, distilled [HD, or bis(2-chloroethyl)sulfide].

7.6.4 Vapor-protective ensembles shall be tested for inward leakage as specified in Section 8.8, Overall Ensemble Inward Leakage Test, and shall have no inward leakage greater than 0.02 percent.

7.7 Optional Liquefied Gas Protection Performance Requirements for Vapor-Protective Ensembles and Ensemble Elements.

7.7.1 Vapor-protective ensembles and ensemble elements that will be certified as compliant with the additional *optional* criteria for liquefied gas protection for escape only shall also meet all applicable requirements in Sections 7.1 through 7.5.

7.7.2 Primary suit, glove, and footwear element materials shall be tested for liquefied gas permeation resistance as specified in Section 8.6, Chemical Permeation Resistance Test, and shall not show signs of damage, and shall not exhibit a normalized breakthrough detection time of 15 minutes or less for the following list of gaseous industrial chemicals:

(1) Ammonia
(2) Chlorine
(3) Ethylene oxide

7.8 Optional Chemical Flash Fire Protection Performance Requirements for Vapor-Protective Ensembles and Ensemble Elements.

7.8.1 Vapor-protective ensembles and ensemble elements that will be certified as compliant with the additional *optional* criteria for chemical flash fire protection for escape only shall also meet all applicable requirements in Sections 7.1 through 7.5.

7.8.2 Vapor-protective ensembles and elements shall be tested for overall ensemble flash protection as specified by Section 8.27, Overall Ensemble Flash Test, shall not have any afterflame times longer than 2 seconds, shall show an ending pressure of at least 13 mm (½ in.) water gauge in the subsequent gastight integrity testing, and shall permit visual acuity through the visor of 20/100 or better.

7.8.3 Primary suit, glove, and footwear element materials shall be tested for thermal protective performance (TPP) as specified in Section 8.18, Thermal Protective Performance Test, and shall have an average TPP rating of not less than 12.

7.8.4 Primary suit, glove, and footwear element materials shall be tested for resistance to flame impingement as specified in Section 8.7, Flammability Resistance Test, and shall not ignite during the initial 3-second exposure period, shall not burn a distance of greater than 100 mm (4 in.), shall not sustain burning for more than 2 seconds, and shall not melt as evidenced by flowing or dripping during the subsequent 12-second exposure period.

Chapter 8 Test Methods

8.1 Sample Preparation Procedures.

8.1.1 Application.

8.1.1.1 The sample preparation procedures contained in this section shall apply to each test method in this chapter, as specifically referenced in the sample preparation section of each test method.

8.1.1.2 Only the specific sample preparation procedure or procedures referenced in the sample preparation section of each test method shall be applied to that test method.

8.1.2 Room Temperature Conditioning Procedure.

8.1.2.1 Samples or specimens shall be conditioned at a temperature of 21°C, ±3°C (70°F, ±5°F) and a relative humidity of 65 percent, ±5 percent until equilibrium is reached as determined or for at least 24 hours, whichever is shortest.

8.1.2.2 Specimens shall be tested within 5 minutes after removal from conditioning.

8.1.3 Flexural Fatigue Procedure for Suit Materials.

8.1.3.1 Samples shall be subjected to flexural fatigue in accordance with ASTM F 392, *Standard Test Method for Flex Durability of Flexible Barrier Materials*, with the following modifications:

(1) In lieu of Flexing Conditions A, B, C, D, or E, test specimens shall have a flex period of 100 cycles at 45 cycles per minute. A cycle shall be full flex and twisting action.
(2) Anisotropic materials shall be tested in both machine and transverse directions.

8.1.3.2 The preconditioning shall be performed according to the sequence specified in the test methods of this chapter.

8.1.4 Abrasion Procedure for Suit Materials.

8.1.4.1 Samples shall be abraded in accordance with ASTM D 4157, *Standard Test Method for Abrasion Resistance of Textile Fabrics (Oscillatory Cylinder Method)*, under the following conditions:

(1) A 2.3 kg (5 lb) tension weight shall be used.
(2) A 1.6 kg (3½ lb) head weight shall be used.
(3) An 80 grit abradant trimite D-weight open coat #1A4180, or equivalent, shall be used.
(4) The specimen shall be abraded for 25 continuous cycles.

8.1.5 Flexural Fatigue Procedure for Gloves. Sample gloves shall be subjected to one full cycle of dexterity testing as specified in Section 8.17.

8.1.6 Flexural Fatigue Procedure for Footwear. Sample footwear shall be subjected to 100,000 flexes in accordance with FIA Standard 1209, *Whole Shoe Flex*.

8.1.7 Fatigue Procedure for Suit Closure Assemblies. Sample suit closure assemblies shall be exercised a total of 50 openings and 50 closings.

--`,,```-`-`,,`,,`,`,,`---
Copyright National Fire Protection Association
Provided by IHS under license with NFPA
No reproduction or networking permitted without license from IHS
Not for Resale

8.1.8 Embrittlement Procedure for Suit, Visor and Faceshield, Glove, and Footwear Materials. Sample suit, visor and faceshield, glove, and footwear materials shall be embrittled in accordance with ASTM D 2136, *Standard Test Method for Coated Fabrics — Low Temperature Bend Test*, with the following modifications:

(1) Embrittlement shall be conducted in a freezer having a temperature no higher than –25°C (–13°F).
(2) The material sample shall first be placed on a flat sheet of dry ice with outer surface of the material in contact with the dry ice for a period of 15 minutes under a pressure of 3.5 kPa (½ psi).
(3) The material sample shall be removed from the dry ice after 15 minutes of contact and immediately placed in the test apparatus.
(4) The bending action of the test apparatus shall be immediately activated while the sample is still in the freezer.

8.2 Gastight Integrity Test.

8.2.1 Application.

8.2.1.1 This test method shall apply to vapor-protective ensembles and to glove and footwear elements.

8.2.1.2 Modifications to this test method for testing vapor-protective ensembles shall be as specified in 8.2.7.

8.2.1.3 Modifications to this test method for testing glove elements shall be as specified in 8.2.8.

8.2.1.4 Modifications to this test method for testing footwear elements shall be as specified in 8.2.9.

8.2.2 Sample Preparation.

8.2.2.1 Samples shall be complete vapor-protective ensemble, glove elements, or footwear elements.

8.2.2.2 Samples shall be conditioned as specified in 8.1.2.

8.2.3 Specimens.

8.2.3.1 Specimens shall be complete vapor-protective ensemble, glove elements, and footwear elements.

8.2.3.2 At least 3 specimens shall be tested.

8.2.3.3 Where the vapor-protective ensemble consists of multiple separate layers, and outer layers are not considered gastight, then only the portion of the vapor-protective suit that is considered gastight shall be tested.

8.2.4 Procedure.

8.2.4.1 Specimens shall be tested in accordance with ASTM F 1052, *Standard Test Method for Pressure Testing of Vapor-Protective Ensembles*.

8.2.4.2 The following pressures shall be used during testing:

(1) Pre-test expansion pressure of 125 mm (5 in.) water gauge
(2) Test pressure of 100 mm (4 in.) water gauge

8.2.5 Report. The ending pressure shall be recorded and reported for each specimen.

8.2.6 Interpretation.

8.2.6.1 The pressure upon completion of the inflation test shall be used to determine pass or fail performance.

8.2.6.2 Any one specimen failing the test shall constitute failure of the test.

8.2.7 Specific Requirements for Testing Vapor-Protective Ensembles.

8.2.7.1 A minimum of one vapor-protective ensemble shall be tested.

8.2.7.2 Where the vapor-protective suit consists of multiple separate layers, and outer layers are not considered gastight, then only the portion of the vapor-protective suit that is considered gastight shall be tested.

8.2.7.3 Ensembles failing the test shall be permitted to be repaired. A report indicating the repairs made shall be provided by the manufacturer.

8.2.8 Specific Requirements for Testing Glove Elements.

8.2.8.1 A minimum of one pair of gloves shall be tested.

8.2.8.2 A test fixture that provides a gastight seal with the cuff of the glove shall be utilized.

8.2.8.3 The fixture shall have a valved port to allow air introduction and pressure measurement.

8.2.8.4 The test fixture shall be permitted to be a vapor-protective suit.

8.2.8.5 Gloves failing this test shall not be permitted to be repaired.

8.2.9 Specific Requirements for Testing Footwear Elements.

8.2.9.1 A minimum of one pair of footwear shall be used.

8.2.9.2 A test fixture that provides a gastight seal with the footwear shall be utilized.

8.2.9.3 The fixture shall have valved port to allow air introduction and pressure measurement.

8.2.9.4 The test fixture shall be permitted to be a vapor-protective suit.

8.2.9.5 Repairs to footwear failing this test shall not be permitted.

8.3 Liquidtight Integrity Test.

8.3.1 Application.

8.3.1.1 This test method shall apply to complete vapor-protective ensembles.

8.3.2 Sample Preparation.

8.3.2.1 Samples shall be complete ensembles.

8.3.2.2 Samples shall be conditioned as specified in 8.1.2.

8.3.3 Specimens.

8.3.3.1 Specimens shall be complete ensembles with all layers assembled that are required for the ensemble to be compliant.

8.3.3.2 At least one specimen shall be tested.

8.3.3.3 Where the vapor-protective ensemble consists of multiple separate layers, and outer layers are not considered gastight, then only the portion of the vapor-protective suit that is considered gastight shall be tested.

8.3.4 Apparatus. The apparatus and supplies for testing shall be those specified in ASTM F 1359, *Standard Test Method for Measuring the Liquid Penetration Resistance of Protective Clothing or Protective Ensembles Using a Shower Spray While on a Mannequin*, using the following modifications:

Copyright National Fire Protection Association
Provided by IHS under license with NFPA
No reproduction or networking permitted without license from IHS
Not for Resale

(1) The surface tension of the water used in testing shall be 34 dynes/cm, ±2 dynes/cm.
(2) The mannequin used in testing shall have straight arms and legs, with arms positioned at the mannequin's side.
(3) The absorptive garment shall cover all portions of the mannequin that are covered by the test specimen.

8.3.5 Procedure. Liquidtight integrity testing of garments shall be conducted in accordance with ASTM F 1359, *Standard Test Method for Measuring Liquid Penetration Resistance of Protective Clothing or Protective Ensembles Using a Shower Spray While on a Mannequin*, with the following modifications:

(1) The method used for mounting the mannequin in the spray chamber shall not interfere with the water spray.
(2) The suited mannequin shall be exposed to the liquid spray for a total of 1 hour, 15 minutes in each of the four specified mannequin orientations.
(3) At the end of the liquid spray exposure period, excess liquid shall be removed from the surface of the specimen.
(4) The specimen shall be inspected within 5 minutes of the end of the liquid spray exposure period for evidence of liquid penetration.

8.3.6 Report.

8.3.6.1 A diagram shall be prepared for each test.

8.3.6.2 The diagram shall identify, record, and report the locations of any liquid leakage as detected on the interior of the vapor-protective ensemble or the liquid-absorptive suit.

8.3.7 Interpretation.

8.3.7.1 Water penetration into the interior of the ensemble shall be based on any evidence of liquid inside the specimen or on the interior of the vapor-protective ensemble, as determined by visual or tactile means, or absorbent toweling.

8.3.7.2 Water penetration between layers of the gloves shall be determined if outer gloves are to be worn in conjunction with chemical-protective suit gloves and if the outer gloves partially or completely fill with liquid.

8.3.7.3 Water penetration between layers of foot protection shall be determined if outer boots are to be worn in conjunction with suit booties to meet the foot protection requirements and if the outer boots partially or completely fill with liquid.

8.4 Overall Ensemble Function and Integrity Test.

8.4.1 Application. This test method shall apply to vapor-protective ensembles.

8.4.2 Sample Preparation.

8.4.2.1 Samples shall be complete vapor-protective ensembles.

8.4.2.2 Samples shall be conditioned as specified in 8.1.2.

8.4.3 Specimens.

8.4.3.1 Specimens shall be complete vapor-protective ensembles.

8.4.3.2 At least one specimen shall be tested.

8.4.3.3 Where the vapor-protective ensemble consists of multiple separate layers, and outer layers are not considered gastight, then only the portion of the vapor-protective suit that is considered gastight shall be tested.

8.4.4 Procedure.

8.4.4.1 Suit overall function and integrity shall be measured in accordance with ASTM F 1154, *Standard Practices for Qualitatively Evaluating the Comfort, Fit, Function, and Integrity of Chemical Protective Suit Ensembles*, with the following parameters:

(1) Both exercise Procedures A and B shall be used.
(2) Ensembles tested shall meet the sizing range of the test subject as determined in 5.3.1.4. The suit shall be donned in accordance with the manufacturer's instructions.
(3) Testing shall be conducted at 25°C, ±7°C (77°F, ±10°F) and relative humidity of 50 percent, ±20 percent.
(4) Test subjects shall wear head protection meeting the dimensional requirements of Type I, Class G helmets of ANSI Z89.1, *Standard for Industrial Head Protection,* while carrying out the exercise protocols.
(5) Test subjects shall wear underclothing in accordance with the manufacturer's recommendations, or in lieu of a detailed recommendation, a full-body coverall.
(6) Test subjects shall wear a self-contained breathing apparatus (SCBA) that is compliant with NFPA 1981, *Standard on Open-Circuit Self-Contained Breathing Apparatus for Fire and Emergency Services.*

8.4.4.2 Visual acuity testing shall be conducted using a standard 6.1 m (20 ft) eye chart, with a normal lighting range of 100 through 150 ft candles at the chart and with the test subject positions at a distance of 6.1 m (20 ft) from the chart.

8.4.4.2.1 The test subject shall have a minimum visual acuity of 20/20 in each eye, uncorrected or corrected with contact lenses, as determined in a visual acuity test or doctor's examination.

8.4.4.2.2 The test subject shall read the standard eye chart through the lens of the SCBA facepiece and suit visor to determine the ensemble visor's impact on the test subject's visual acuity.

8.4.4.3 At the end of all testing, the test subject shall be instructed to remove his or her hands from each of the gloves while still wearing the suit, touch the bypass valve on the SCBA, and then reinsert his or her hands into the gloves. This action shall be repeated a total of five times.

8.4.4.4 Gastight integrity shall be measured as specified in Section 8.2 upon completion of the exercise protocols.

8.4.5 Report.

8.4.5.1 The end suit pressure shall be recorded and reported.

8.4.5.2 The ability of the test subject to satisfactorily complete all exercises while wearing head protection meeting the dimensional requirements of Type I, Class G helmets of ANSI Z89.1, *Standard for Industrial Head Protection*, shall be recorded and reported.

8.4.5.3 The visual acuity of the test subject when in and out of the suit shall be recorded and reported.

8.4.5.4 The ability of the test subject to repeatedly remove and reinsert his or her hands completely into the gloves 5 times sequentially shall be recorded and reported.

8.4.6 Interpretation.

8.4.6.1 Following the test subject exercises, an ending suit pressure after inflation testing shall be used to determine pass or fail performance.

--`,,`,,`-`-`,,`,,`,`,,`---
Copyright National Fire Protection Association
Provided by IHS under license with NFPA
No reproduction or networking permitted without license from IHS
Not for Resale

8.4.6.2 The ability of the test subject to satisfactorily complete all exercises while wearing head protection meeting the dimensional requirements of Type I, Class G helmets of ANSI Z89.1, *Standard for Industrial Head Protection*, shall be used to determine pass or fail performance.

8.4.6.3 The visual acuity of the test subject when inside the suit shall be used for determining pass or fail performance.

8.4.6.4 The inability of the test subject to repeatedly remove and reinsert his or her hands completely into the gloves 5 times sequentially shall determine pass or fail performance.

8.5 Maximum Suit Ventilation Rate Test.

8.5.1 Application. This test method shall apply to vapor-protective ensembles.

8.5.2 Sample Preparation.

8.5.2.1 Samples shall be complete vapor-protective ensembles.

8.5.2.2 Samples shall be conditioned as specified in 8.1.2.

8.5.3 Specimens.

8.5.3.1 Specimens shall be complete vapor-protective ensembles.

8.5.3.2 At least one specimen shall be tested.

8.5.3.3 The test specimen shall include all outer wear and other items required for the vapor-protective ensemble to be compliant with this standard.

8.5.4 Apparatus.

8.5.4.1 A suit wall connector capable of accommodating the attachment of an airline hose from a pressurized air source shall be installed in the back mid-torso region of the vapor-protective suit to be tested as indicated in Figure 8.5.4.1. The connector and airline hose shall allow an airflow rate of 500 L/min. The connector used in this test shall be permitted to be a standard airline connection that is used with airline respiratory equipment.

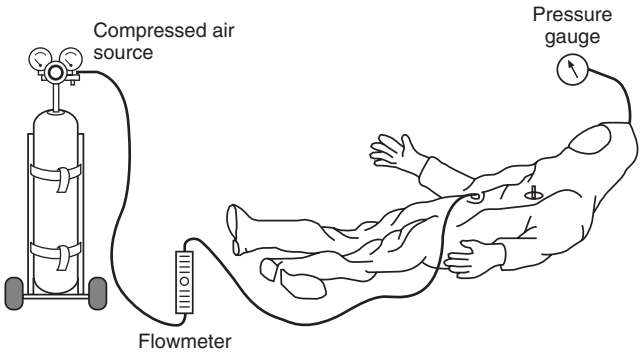

FIGURE 8.5.4.1 Configuration of Whole Suit Maximum Airflow Test.

8.5.4.2 A flowmeter capable of measuring airflow rates of 0 to 1000 L/min, ±25 L/min, calibrated for air and the conditions of use, shall be used on the airline hose.

8.5.4.3 A pressure gauge capable of measuring pressures from 0 to 510 mm, ±3 mm (0 to 20 in., ±⅛ in.) water column gauge pressure shall be attached via a second suit wall connector at the very top of the vapor-protective suit.

8.5.5 Procedure.

8.5.5.1 Following the attachment of the two connectors, the gastight integrity of the suit shall be tested as specified in Section 8.2.

8.5.5.2 During the test, the pressure gauge specified in 8.5.5.3 shall be attached to one bulkhead connector; the other bulkhead connector shall be plugged.

8.5.5.2.1 During the test, a soapy water solution shall be applied around the edges of the connectors to assure that no leakage occurs through the installed suit wall connectors.

8.5.5.2.2 The remaining steps of this procedure shall be completed only if the sample suit shows an ending pressure of 80 mm (3$\frac{3}{16}$ in.) water column gauge or higher.

8.5.5.3 The suit shall be connected to a pressurized air source capable of providing 500 L/min by attaching an airline to the installed mid-torso suit wall connector.

8.5.5.4 Beginning at time zero, air shall be flowed into the suit at a rate of 500 L/min.

8.5.5.5 After a period of 5 minutes, the pressure at the head connector shall be measured.

8.5.5.6 The specialized fittings installed in the suit for this test shall be plugged to prevent air leakage and the suit shall be subjected to a second overall gastight integrity test as specified in Section 8.2.

8.5.6 Report.

8.5.6.1 The maximum internal suit pressure during the airflow period shall be recorded and reported.

8.5.6.2 The ending suit pressure for the gastight integrity tests before and after the airflow period shall be recorded and reported.

8.5.7 Interpretation.

8.5.7.1 The maximum internal suit pressure shall be used to determine pass or fail performance.

8.5.7.2 The ending pressure after suit inflation testing subsequent to the maximum suit ventilation test shall be used to determine compliance.

8.6 Chemical Permeation Resistance Test.

8.6.1 Application.

8.6.1.1 This test method shall apply to suit, visor, glove, and footwear element materials, and shall apply to the elements' seams.

8.6.1.2 Modifications to this test method for testing suit materials after flexing and abrading shall be as specified in 8.6.7.

8.6.1.3 Modifications to this test method for testing glove materials after flexing and abrading shall be as specified in 8.6.8.

8.6.1.4 Modifications to this test method for testing footwear materials after flexing and abrading shall be as specified in 8.6.9.

8.6.1.5 Modifications to this test method for testing seams shall be as specified in 8.6.10.

8.6.1.6 Modifications to this test for testing primary materials against liquefied gases shall be as specified in 8.6.11.

--`,,```-`-`,,`,,`,`,,`---
Copyright National Fire Protection Association
Provided by IHS under license with NFPA
No reproduction or networking permitted without license from IHS
Not for Resale

8.6.1.7 Modifications to this test for testing suit, visor, glove, and footwear materials following cold temperature embrittlement exposure shall be as specified in 8.6.12.

8.6.2 Sample Preparation.

8.6.2.1 Samples shall be either vapor-protective ensembles or suit materials, visor materials, gloves, and footwear of the sizes specified in the modifications.

8.6.2.2 Samples shall be conditioned as specified in 8.1.2 after the conditioning specified in the modifications.

8.6.3 Specimens.

8.6.3.1 Specimens shall be the size specified in ASTM F 739, *Standard Test Method for Resistance of Protective Clothing Materials to Permeation by Liquids and Gases.*

8.6.3.2 At least three specimens shall be tested per chemical challenge.

8.6.3.3 For composite materials, only the chemical protection layer shall be the sample for testing for chemical permeation resistance.

8.6.4 Procedures.

8.6.4.1 Industrial Chemicals.

8.6.4.1.1 Permeation resistance shall be measured in accordance with ASTM F 739, *Standard Test Method for Resistance of Protective Clothing Materials to Permeation by Liquids and Gases*, at 27°C, ±2°C (81°F, ±3°F) for a test duration of at least 3 hours for the following chemicals:

(1) Acetone
(2) Acetonitrile
(3) Anhydrous ammonia (gas)
(4) 1,3-Butadiene (gas)
(5) Carbon disulfide
(6) Chlorine (gas)
(7) Dichloromethane
(8) Diethyl amine
(9) Dimethyl formamide
(10) Ethyl acetate
(11) Ethylene oxide (gas)
(12) Hexane
(13) Hydrogen chloride (gas)
(14) Methanol
(15) Methyl chloride (gas)
(16) Nitrobenzene
(17) Sodium hydroxide
(18) Sulfuric acid
(19) Tetrachloroethylene
(20) Tetrahydrofuran
(21) Toluene

8.6.4.1.2 The minimum detectable permeation rate for the permeation test apparatus shall be measured for each chemical tested. The minimum detectable permeation rate shall be less than or equal to 0.10 $\mu g/cm^2$/min for all permeation resistance tests. When using closed loop systems, the testing laboratory shall assume 1 hour accumulated permeation.

8.6.4.2 Chemical Warfare Agents.

8.6.4.2.1 Specimens shall be tested for permeation resistance for not less than 60 minutes in accordance with ASTM F 739, *Standard Test Method for Resistance of Protective Clothing Materials to Permeation by Liquids or Gases Under Conditions of Continuous Contact,* with the following modifications:

(1) The test cells shall be designed to accommodate the introduction of liquid chemicals in a safe manner.
(2) The liquid concentration density shall be 100 g/m^2, +10/−0 g/m^2, and the cell shall be assembled in closed-top configuration.
(3) The collection media shall be filtered air flowed through the bottom of the test cell at a rate of 1 L/min ±0.1 L/min.
(4) Analytical methods used shall be sensitive to concentrations of at least one order of magnitude lower than the required end points.
(5) Cumulative permeation shall be determined and reported.
(6) Testing shall be performed at a temperature of 32°C, ±1°C (90°F, ±2°F).

8.6.4.2.2 The following chemicals shall be tested:

(1) Cyanogen chloride (CK; 506-77-4)
(2) Carbonyl chloride (CG; 75-44-5)
(3) Dimethyl sulfate (DMA, sulfuric acid dimethyl ester; 77-78-1)
(4) Hydrogen cyanide (AC, HCN, CAS; 74-90-8)

8.6.4.2.3 The chemical warfare agent sarin (GB) shall be tested.

8.6.4.2.4 The minimum detectable cumulative permeation shall be determined for each chemical warfare agent tested.

8.6.5 Report.

8.6.5.1 The following information and results shall be recorded and reported:

(1) Material type or name
(2) Chemical or chemical mixture (volume composition of mixture)
(3) Permeation normalized breakthrough detection time in minutes calculated at a system detectable permeation rate of 0.10 $\mu g/cm^2$/min for industrial chemicals
(4) Maximum permeation rate ($\mu g/cm^2$/min) observed for industrial chemicals
(5) Minimum detectable rate for test apparatus ($\mu g/cm^2$/min) for industrial chemicals
(6) Cumulative permeation mass ($\mu g/cm^2$) for chemical warfare agents
(7) Minimum detectable cumulative permeation mass ($\mu g/cm$) for chemical warfare agents
(8) Detection method
(9) Date of test
(10) Testing laboratory

8.6.5.2 The manufacturer shall report all three measured normalized breakthrough detection times or cumulative permeation masses in the technical data package.

8.6.5.3 The manufacturer shall report all three observed permeation rates in the technical data package for industrial chemicals.

8.6.6 Interpretation.

8.6.6.1 For industrial chemicals, the average normalized breakthrough detection time shall be used in determining compliance for the particular material/chemical combination.

8.6.6.2 For chemical warfare agents, the average cumulative permeation mass shall be used in determining compliance for the particular material/chemical combination.

Copyright National Fire Protection Association
Provided by IHS under license with NFPA
No reproduction or networking permitted without license from IHS
Not for Resale

8.6.7 Specific Requirements for Testing Suit Materials After Flexing and Abrading.

8.6.7.1 Samples for conditioning shall be 200 mm × 280 mm (8 in. × 11 in.) rectangles and shall consist of all layers as configured in the suit.

8.6.7.2 Two samples shall first be conditioned by flexing as specified in 8.1.3.

8.6.7.2.1 One sample shall be flexed with the longitudinal axis parallel to the machine direction of the material, and the second sample shall be flexed with the longitudinal axis parallel to the cross-machine direction of the material.

8.6.7.2.2 Following flexing, two samples for abrasion conditioning, each measuring 45 mm × 230 mm (1¾ in. × 9 in.), shall be cut from the center of the flexed samples.

8.6.7.2.3 At least one specimen for abrasion conditioning shall be taken from a sample flexed in the machine direction, and at least one specimen for abrasion conditioning shall be taken from a sample flexed in the cross-machine direction for each chemical tested.

8.6.7.3 These new samples for abrasion conditioning shall then be conditioned by abrading as specified in 8.1.4.

8.6.7.3.1 Following abrasion, only one specimen for permeation resistance testing shall be taken from each sample subjected to abrasion.

8.6.7.3.2 The permeation test specimen shall be taken from the exact center of the abraded sample so that the center of the permeation test and the center of the abraded sample coincide.

8.6.8 Specific Requirements for Testing Glove Materials After Flexing and Abrading.

8.6.8.1 Samples for conditioning shall be whole glove components or whole glove individual elements.

8.6.8.2 Samples shall first be conditioned by flexing as specified in 8.1.5.

8.6.8.2.1 Following flexing, three samples for abrasion conditioning, each measuring 45 mm × 230 mm (1¾ in. × 9 in.), shall be cut from the center of the gauntlet portion of the flexed sample.

8.6.8.2.2 At least one specimen for abrasion conditioning shall be taken from a sample flexed in the machine direction, and at least one specimen for abrasion conditioning shall be taken from a sample flexed in the cross-machine direction for each chemical tested.

8.6.8.3 These new samples for abrasion conditioning shall then be conditioned by abrading as specified in 8.1.4.

8.6.8.3.1 Following abrasion, only one specimen for permeation resistance testing shall be taken from each sample subjected to abrasion.

8.6.8.3.2 The permeation test specimen shall be taken from the exact center of the abraded sample so that the center of the permeation test and the center of the abraded sample coincide.

8.6.9 Specific Requirements for Testing Footwear Materials After Flexing and Abrading.

8.6.9.1 This test shall apply to all types of footwear configurations. Where the footwear incorporates a bootie constructed of suit material, the suit material flex fatigue resistance test shall be permitted to be substituted for this test.

8.6.9.2 Samples for conditioning shall be whole footwear components or whole footwear individual elements.

8.6.9.3 Samples shall first be conditioned by flexing as specified in 8.1.6. Following flexing, three samples for abrasion conditioning, each measuring 45 mm × 230 mm (1¾ in. × 9 in.), shall be cut from the center of the footwear upper where the greatest flexing occurred, usually at the quarter or vamp of the flexed sample.

8.6.9.4 These new samples for abrasion conditioning shall then be conditioned by abrading as specified in 8.1.4.

8.6.9.4.1 Following abrasion, only one specimen for permeation resistance testing shall be taken from each sample subjected to abrasion.

8.6.9.4.2 The permeation test specimen shall be taken from the exact center of the abraded sample so that the center of the permeation test and the center of the abraded sample coincide.

8.6.10 Specific Requirements for Testing Seams.

8.6.10.1 Seam specimens shall be prepared from seam samples that have a minimum of 150 mm (6 in.) of material on each side of the seam center.

8.6.10.2 Permeation test specimens shall be cut such that the exact seam center divides the specimen in half.

8.6.10.3 Seam specimens shall be prepared representing each different seam or shall be taken from each different type of seam found in the vapor-protective suit, including as a minimum the suit-to-suit material seams and the suit-to-visor material seams.

8.6.10.4 Samples for conditioning shall be 600 mm (23⁹⁄₁₆ in.) lengths of prepared seam or cut from vapor-protective ensembles.

8.6.11 Specific Requirements for Testing Primary Materials Against Liquefied Gases.

8.6.11.1 Samples for conditioning shall be suit material, visor material, glove material from the glove gauntlet, and footwear material from the footwear upper.

8.6.11.2 Specimens shall be conditioned as specified in 8.1.8.

8.6.11.3 Visor materials that are rigid and cannot be bent in the test apparatus shall be excluded from this conditioning.

8.6.11.4 Only one specimen for permeation resistance testing shall be taken from each sample subjected to embrittlement conditioning. The permeation test specimen shall be taken from the exact center of the folded sample so that the center of the permeation test and the center of the folded sample coincide.

8.6.11.5 The test cell and test chemical shall be maintained at a temperature sufficient to keep the test chemical as a liquid at ambient pressure such that a 13 mm (½ in.) liquid layer is maintained at all times during the test.

8.6.12 Specific Requirements for Testing Suit, Visor, Glove, and Footwear Materials Following Cold Temperature Embrittlement Exposure.

8.6.12.1 Samples for conditioning shall be suit material, visor material, glove material from the glove gauntlet, and footwear material from the footwear upper.

Copyright National Fire Protection Association
Provided by IHS under license with NFPA
No reproduction or networking permitted without license from IHS
Not for Resale

8.6.12.2 Specimens shall be conditioned as specified in 8.1.8.

8.6.12.3 Only one specimen for permeation resistance testing shall be taken from each sample subjected to embrittlement conditioning.

8.6.12.4 The permeation test specimen shall be taken from the exact center of the folded sample so that the center of the permeation test and the center of the folded sample coincide.

8.7 Flammability Resistance Test.

8.7.1 Application. This test method shall be applied to suit, visor, glove, and footwear element materials.

8.7.2 Sample Preparation.

8.7.2.1 Samples for conditioning shall be at least 1 m (1 yd) squares of material.

8.7.2.2 Samples shall be conditioned as specified in 8.1.2.

8.7.3 Specimens.

8.7.3.1 Specimens shall be the size specified in ASTM F 1358, *Standard Test Method for Resistance of Protective Clothing Materials to Flame Impingement.*

8.7.3.2 Five specimens in each of the warp directions, machine or coarse, and the filling directions, cross-machine or wale, shall be tested.

8.7.3.3 Where the material is isotropic, 10 specimens shall be tested.

8.7.4 Procedure. Flame resistance testing shall be conducted in accordance with ASTM F 1358, *Standard Test Method for Resistance of Protective Clothing Materials to Flame Impingement.*

8.7.5 Report.

8.7.5.1 Afterflame times shall be recorded and reported for each specimen and as the average for each material direction.

8.7.5.2 Burn distances shall be recorded and reported for each specimen and as the average for each material direction.

8.7.5.3 Ignition during the initial 3-second exposure shall be recorded and reported for each specimen.

8.7.5.4 Evidence of dripping, melting, or flowing during the 12-second exposure period shall be recorded and reported for each specimen.

8.7.6 Interpretation.

8.7.6.1 Ignition of any individual specimen during the initial 3-second exposure shall be used to determine compliance with the ignition requirements.

8.7.6.2 The longest average afterflame time in any direction shall be used to determine compliance with the afterflame requirements.

8.7.6.3 The longest average burn distance in any direction shall be used to determine compliance with burn distance requirements.

8.7.6.4 Evidence of melting, dripping, or flowing of any specimen shall be used to determine compliance with melting requirements.

8.8 Overall Ensemble Inward Leakage Test.

8.8.1 Application. This test method shall apply to complete vapor-protective ensembles.

8.8.2 Sample Preparation.

8.8.2.1 Samples shall be complete vapor-protective ensembles.

8.8.2.2 Samples shall be conditioned as specified in 8.1.2.

8.8.3 Specimen.

8.8.3.1 Specimens shall be complete vapor-protective ensembles.

8.8.3.2 At least one specimen shall be tested.

8.8.4 Apparatus.

8.8.4.1 Sulfur hexafluoride, CAS No. 2551-62-4, with a minimum purity of 99.8 percent, shall be used as the test agent.

8.8.4.2 The test shall be conducted in a sealed test chamber with minimum volume of sufficient dimensions to permit free movement of the test subject when fully dressed in the vapor-protective ensemble.

8.8.4.2.1 The chamber shall have a circulation fan or other means to ensure uniform concentration of the test agent throughout the chamber during the test.

8.8.4.2.2 The exact dimensions of the chamber shall be measured and shall be used to calculate the total volume of the chamber in order to determine the amount of sulfur hexafluoride gas to be added to achieve the required concentration specified in 8.8.5.8.

8.8.4.3 Two calibrated portable pumps that are capable of maintaining a flow rate of 0.4 L/min, ±0.005 L/min, shall be provided.

8.8.4.3.1 Both pumps shall be placed outside the test chamber.

8.8.4.3.2 Pump A shall have a gas stream selection valve with a minimum of four isolated stream settings. A stream setting shall be provided for each ensemble interior sampling location.

8.8.4.4 One or more suit wall connectors shall be installed in the ensemble in such a manner that the fixtures do not interfere with the movement of the test subject and that the installation does not adversely affect the integrity of the ensemble.

8.8.4.4.1 The one or more suit wall connectors shall permit the establishment of five separate airlines to pass into the suit.

8.8.4.4.2 One airline shall be designated as an air sample return port.

8.8.4.4.3 Each remaining airline shall consist of a 10 mm (⅜ in.) nominal outer diameter flexible tubing attached to the interior of the respective suit wall connector in such a manner as to allow the other end of the tubing to be attached to the required sampling locations on the test subject's body. Pinning tubing to the test subject's body shall be permitted.

8.8.4.5 Equal lengths of 3 mm (⅛ in.) nominal outer diameter flexible tubing shall be used to transfer air samples from sampling ports to sample pumps and back to the return port from the exhaust port of sample pump A.

8.8.4.5.1 One length of tubing shall be attached to the test chamber ceiling in such a manner that one end of the tubing hangs as close as possible to the center of the test chamber and the other end is attached to the intake port of sample pump B.

Copyright National Fire Protection Association
Provided by IHS under license with NFPA
No reproduction or networking permitted without license from IHS
Not for Resale

8.8.4.5.2 One length of tubing shall be attached to the respective suit wall connector exterior sampling port, with the other end attached to an inlet port on the gas stream selection valve on pump A.

8.8.4.5.3 One length of tubing shall be connected to the respective suit wall connector exterior and airline designated as the return port, with the other end of the tubing attached to the exhaust port of pump A.

8.8.4.5.4 Sample tubing shall be permitted to be joined together by means of hose clamps or taping in a manner that does not restrict airflow.

8.8.4.5.5 Sample tubing shall be permitted to be taped to the exterior of the ensemble to permit the reduction of hanging weight stress and strain on the suit wall connectors by the employment of one piece of duct tape no greater in length than 305 mm (12 in.). All tubing shall be taped together in no more than one location on the ensemble. The tape shall not cover any seams.

8.8.4.5.6 The total interior volume of each gas tubing sampling stream shall be determined for each sampling location.

8.8.4.6 At least 23 gastight sample bags shall be used to collect air samples. An adapter shall be used to connect the inlet valve of the sample bags to the exhaust ports of the pumps to facilitate changing of sample bags. The adapter shall not affect the integrity of the sampling system.

8.8.4.7 A thermometer sensor shall be placed in the test chamber in a manner allowing the test administrator to record the initial and final test chamber temperatures.

8.8.4.8 A syringe suitable for gas sampling and capable of delivering the required amount of sulfur hexafluoride into the chamber shall be placed in the test chamber with a sealed bag containing 10 percent v/v sulfur hexafluoride in nitrogen.

8.8.4.9 All test subjects shall have a medical doctor's certificate that substantiates they are medically and physically suitable to perform these tests without danger to themselves. The medical certificate shall have been issued within 12 months prior to the testing.

8.8.4.10 Test subjects shall be familiar with the use of vapor-protective ensembles and with self-contained breathing apparatus (SCBA). The test subject shall select the appropriate size of the vapor-protective ensemble from available sizes using the manufacturer's sizing chart.

8.8.4.11 For consistency in testing, the SCBA used for all testing with the vapor-protective ensemble shall be certified as compliant with NFPA 1981, *Standard on Open-Circuit Self-Contained Breathing Apparatus for Fire and Emergency Services*, and shall be equipped with a fully charged 60-minute breathing air cylinder.

8.8.5 Procedure.

8.8.5.1 Interior sampling tubes shall be pinned to the test subject as follows:

(1) One tube attached to the middle of the subject's back directly under the shoulder
(2) One tube attached to the sternum
(3) One tube attached to an extremity location on the forearm or calf
(4) One tube attached to the crotch

8.8.5.1.1 Additional sampling locations shall be permitted if the testing apparatus allows such sampling.

8.8.5.2 The test subject shall don the protective ensemble and respirator in accordance with the manufacturer's instructions in an area located away from the test chamber. Donning shall be accomplished without causing the restriction of flow through interior sampling tubes. Adjustment of tube pathways shall be permitted to connect the sample tubes to the interior sampling ports.

8.8.5.3 Exterior sampling tubing and return tubing shall be attached to the exterior sampling ports and return port.

8.8.5.4 After sealing the ensemble, the test subject shall enter the test chamber, and the test chamber shall be sealed.

8.8.5.5 Sample pumps A and B shall be turned on and function at a flow rate of 0.4 L/min. Each pump shall be placed on hold while not actively performing purging or sampling.

8.8.5.6 At least one baseline sample set shall be taken prior to the addition of sulfur hexafluoride to the chamber.

8.8.5.6.1 A baseline sample shall consist of one test chamber air sample and one sample taken from each sampling location within the ensemble after sampling lines have been purged.

8.8.5.6.2 Sampling lines shall be purged for a duration of time that flushes the air volume completely out of the sampling lines twice. The gas sample return line to the ensemble shall be disconnected during this purge cycle. Ensemble air sampling shall be taken between purge cycles of each air sampling line. Purge cycles shall be employed for all inward leakage sampling.

8.8.5.6.3 Each air test sample shall be collected from the exhaust port of the sample pumps at a rate of 0.4 L/min, ±0.005 L/min for 1 minute, ±1 second.

8.8.5.6.4 Test chamber and ensemble baseline air samples shall be permitted to be taken simultaneously.

8.8.5.7 At the end of the baseline test chamber and ensemble air sampling periods, the sampling bags shall be removed from the pump, sealed, and stored. The gas sample return line shall be reconnected to the exhaust port of pump A. The removal of the gas sample return line from the exhaust port of pump A shall be permitted during sample acquisition.

8.8.5.8 The test subject shall add sufficient sulfur hexafluoride to achieve a concentration of 1000 ppm, ±100 ppm on a volume basis. The air inside the chamber shall be allowed to reach equilibrium for a period of 1 minute, ±1 second prior to performing inward leakage testing.

8.8.5.9 At least three full sets of air samples from each sampling location shall be taken, and at least three sets of two test chamber samples shall be taken for inward leakage detection testing.

8.8.5.10 At the conclusion of the challenge agent equilibrium period, the test subject shall perform one series of stationary exercises for each of the three air test sample sets. The stationary exercise shall be as specified in Procedure A of ASTM F 1154, *Standard Practice for Qualitatively Evaluating the Comfort, Fit, Function, and Integrity of Chemical Protective Suit Ensembles*, as modified by 8.8.5.11.

8.8.5.11 The stationary exercises specified in Procedure A of ASTM F 1154, *Standard Practice for Qualitatively Evaluating the*

--`,,,````-`-`,,`,,`,`,,`---

Copyright National Fire Protection Association
Provided by IHS under license with NFPA
No reproduction or networking permitted without license from IHS
Not for Resale

Comfort, Fit, Function, and Integrity of Chemical Protective Suit Ensembles, shall be performed with the following modifications:

(1) At the conclusion of the "duck squat" exercise specified in 8.8.2 of ASTM F 1154, test subjects shall remain in a squatting position and exhaust as much of the internal volume of the suit as possible by placing their hands on top of their heads, tucking their arms in toward their bodies, and gathering as much of the excess ensemble material to the body as possible.
(2) The test subject shall then resume the exercise protocol as specified in Procedure A of ASTM F 1154.

8.8.5.12 For each exercise protocol, at least two test chamber air samples shall be collected while the test subject is performing the exercise protocol.

8.8.5.13 At least one sample from each ensemble sampling location shall be taken after the completion of each exercise protocol. The test subject shall be allowed to rest while the ensemble samples are acquired.

8.8.5.14 At the conclusion of the three exercise series and collection of chamber and ensemble air samples, the test subject exits the chamber and doffs the vapor-protective ensemble in an area well away from the chamber.

8.8.5.15* All samples collected shall be analyzed using an appropriate analytical technique within 8 hours of collection. The sensitivity of the analytic technique chosen shall provide for a minimum detection limit of at least 0.2 ppm in order to determine compliance with 7.6.4.

8.8.5.16 Alternate plumbing of gastight sample tubing streams directly into analytical equipment shall be permitted if the device meets the criteria required in 8.8.5.15 and each required measurement is able to be individually acquired.

8.8.6 Report. The percent inward leakage of sulfur hexafluoride into the ensemble shall be calculated, recorded, and reported based on the measured concentration inside the ensemble versus the average measured concentration in the test chamber for each sampling location using the following equation:

$$\text{percent} = \frac{(\text{concentration inside ensemble}) - (\text{baseline inside ensemble})}{\text{inward leakage} \times \left[(\text{concentration in test chamber}) - (\text{baseline in test chamber})\right]} \times 100$$

8.8.7 Interpretation. Failure at any sampling location shall constitute failure of the test.

8.9 Exhaust Valve Mounting Strength Test.

8.9.1 Application. This test method shall apply to exhaust valves mounted in vapor-protective ensembles.

8.9.2 Sample Preparation.

8.9.2.1 Samples shall be an exhaust valve mounted into a piece of garment material having a minimum diameter of 200 mm (8 in.). The means of mounting the exhaust valve shall be representative of the construction practices used in the vapor-protective ensemble.

8.9.2.2 Samples shall be conditioned as specified in 8.1.2.

8.9.3 Specimens.

8.9.3.1 Specimens shall be complete exhaust valve assemblies mounted into a piece of vapor-protective ensembles material.

8.9.3.2 At least three specimens shall be tested.

8.9.4 Apparatus.

8.9.4.1 A specimen mounting ring shall be used for clamping the sample.

8.9.4.1.1 The mounting ring shall have an inner diameter of 150 mm (6 in.).

8.9.4.1.2 The mounting ring shall have a means for tightly clamping the specimen along the circumference of the ring and shall hold the specimen perpendicular to the motion of the pushing force.

8.9.4.1.3 The mounting ring shall be designed such that a means is provided for affixing it to the fixed (bottom) arm of a tensile testing machine and that a minimum 50 mm (2 in.) unobstructed space is provided under the specimen.

8.9.4.2 A flat plate pushing device shall be 50 mm (2 in.) in diameter and shall have a means for being attached to the movable (upper) arm of a tensile testing machine. The flat plate shall be oriented perpendicular to the motion of the pushing force.

8.9.4.3 The tensile testing machine shall meet the following criteria:

(1) It shall be capable of holding the specimen mounting ring securely in the fixed lower arm.
(2) It shall be capable of holding the flat plate pushing device securely in the movable upper arm.
(3) It shall have a calibrated dial, scale, or chart to indicate the applied load and elongation.
(4) The error of the machine shall not exceed 2 percent of any reading within its loading range.
(5) It shall be outfitted with a compression cell. The testing machine shall be configured with the compression cell on either the lower or upper arm.

8.9.5 Procedure.

8.9.5.1 Specimens shall be clamped into the specimen mounting ring and attached to the fixed arm of a tensile testing machine.

8.9.5.2 The flat plate pushing device shall be attached to the movable arm of a tensile testing machine.

8.9.5.3 The tensile testing machine shall be set in operation but stopped when the exhaust valve either breaks through the material or when the material breaks along the specimen mounting ring. The flat plate pushing device shall have a velocity of 305 mm/min (12 in./min) under load conditions and shall be uniform at all times.

8.9.5.4 The maximum force registered by the indicating device of the tensile testing machine shall be recorded for each determination.

8.9.6 Report.

8.9.6.1 The mounting strength of each specimen shall be recorded and reported to the nearest 1 N (¼ lbf).

8.9.6.2 The average mounting strength shall be calculated, recorded, and reported to the nearest 1 N (¼ lbf).

8.9.7 Interpretation. The average mounting strength shall be used to determine pass or fail performance.

Copyright National Fire Protection Association
Provided by IHS under license with NFPA
No reproduction or networking permitted without license from IHS
Not for Resale

8.10 Burst Strength Test.

8.10.1 Application.

8.10.1.1 This test shall apply to vapor-protective suit elements and visor materials.

8.10.1.2 Where vapor-protective suits are constructed of several separable layers, then all layers, assembled in the order in which they appear in the suit, shall be tested as a composite.

8.10.2 Sample Preparation.

8.10.2.1 Samples shall be at least 1 m (1 yd) squares of material.

8.10.2.2 Samples shall be conditioned as specified in 8.1.2.

8.10.3 Specimens.

8.10.3.1 Specimens shall be the size specified in ASTM D 751, *Standard Methods of Testing Coated Fabrics*.

8.10.3.2 At least 10 specimens shall be tested.

8.10.4 Procedure. Material burst strength shall be measured in accordance with ASTM D 751, *Standard Methods of Testing Coated Fabrics*, using the tension testing machine with ring clamp.

8.10.5 Report. The burst strength of each specimen shall be recorded and reported to the nearest 1 N (¼ lbf). The average burst strength of all specimens shall be calculated, recorded, and reported.

8.10.6 Interpretation. The average burst strength shall be used to determine pass or fail performance.

8.11 Puncture Propagation Tear Resistance Test.

8.11.1 Application.

8.11.1.1 This test shall apply to vapor-protective suit elements and visor materials.

8.11.1.2 Where the suit element is constructed of several layers, then all layers, assembled in the order in which they appear in the suit, shall be tested as a composite.

8.11.2 Sample Preparation.

8.11.2.1 Samples shall be at least 1 m (1 yd) squares of material.

8.11.2.2 Samples shall be conditioned as specified in 8.1.2.

8.11.3 Specimens.

8.11.3.1 Specimens shall be the size specified in ASTM D 2582, *Standard Test Method for Puncture Propagation Tear Resistance of Plastic Film and Thin Sheeting*.

8.11.3.2 A minimum of five specimens in each of the warp, machine or coarse, and the filling, cross-machine or wale, directions shall be tested.

8.11.3.3 If the material is isotropic, then 10 specimens shall be tested.

8.11.4 Procedure. Specimens shall be tested in accordance with ASTM D 2582, *Standard Test Method for Puncture Propagation Tear Resistance of Plastic Film and Thin Sheeting*.

8.11.5 Report.

8.11.5.1 The puncture propagation tear resistance of each specimen shall be recorded and reported to the nearest 1 N (¼ lbf).

8.11.5.2 An average puncture propagation tear resistance shall be calculated, recorded, and reported for the warp and filling directions.

8.11.6 Interpretation.

8.11.6.1 Pass or fail performance shall be based on the average puncture propagation tear resistance in the warp and filling directions.

8.11.6.2 Failure in any one direction constitutes failure for the material.

8.12 Cold Temperature Performance Test One.

8.12.1 Application. This test method shall apply to vapor-protective suit element and glove element materials.

8.12.2 Sample Preparation.

8.12.2.1 Samples for conditioning shall be at least 1 m (1 yd) squares of material.

8.12.2.2 Samples shall be conditioned as specified in 8.1.2.

8.12.3 Specimens.

8.12.3.1 Specimens shall be the size specified in ASTM D 747, *Standard Test Method for Apparent Bending Modulus of Plastics by Means of a Cantilever Beam*.

8.12.3.2 A minimum of five specimens consisting of all layers in each of the warp, machine or coarse, and filling, cross-machine or wale, directions shall be tested.

8.12.3.3 If the material is isotropic, then 10 specimens shall be tested.

8.12.4 Procedure. Specimens shall be tested in accordance with ASTM D 747, *Standard Test Method for Apparent Bending Modulus of Plastics by Means of a Cantilever Beam*, with the following modifications:

(1) The test temperature shall be –25°C (–13°F).
(2) The bending moment shall be that applied when the specimen is bent to a 60 degree angular deflection and shall be calculated in inch-pounds as follows:

$$\text{Bending moment} = \frac{\text{load scale reading} \times \text{moment weight}}{100}$$

8.12.5 Report. Cold temperature performance results shall be recorded and reported as the average for each material direction.

8.12.6 Interpretation. Failure of the material in any direction shall constitute failing performance.

8.13 Fitting Pull Out Strength Test.

8.13.1 Application. This test method shall apply to each type of external fitting used in vapor-protective ensembles.

8.13.2 Sample Preparation.

8.13.2.1 Samples shall be an external fitting and the suit element material assembly representative of the construction practices used to fabricate the vapor-protective suit.

8.13.2.2 Samples shall be conditioned as specified in 8.1.2.

8.13.3 Specimens.

8.13.3.1 Specimens shall be an external fitting and suit material assembly representative of the construction practices used to fabricate the vapor-protective suit.

--`,,```-`-`,,`,,`,`,,`---
Copyright National Fire Protection Association
Provided by IHS under license with NFPA
No reproduction or networking permitted without license from IHS
Not for Resale

8.13.3.2 At least three specimens shall be tested.

8.13.4 Apparatus.

8.13.4.1 A specimen mounting ring shall be used for clamping the sample.

8.13.4.1.1 The mounting ring shall have an inner diameter of 150 mm (6 in.).

8.13.4.1.2 The mounting ring shall have a means for tightly clamping the specimen along the circumference of the ring and shall hold the specimen perpendicular to the motion of the pushing force.

8.13.4.1.3 The mounting ring shall be designed such that a means is provided for affixing it to the fixed (bottom) arm of a tensile testing machine.

8.13.4.2 A set of tensile machine jaws shall be used to pull the external fitting perpendicular to the surface of the suit material in which the external fitting is mounted.

8.13.4.3 The tensile testing machine shall meet the following criteria:

(1) It shall be capable of holding the specimen mounting ring securely in the fixed lower arm.
(2) It shall be capable of holding the flat plate pushing device securely in the movable upper arm.
(3) It shall have a calibrated dial, scale, or chart to indicate the applied load and elongation.
(4) The error of the machine shall not exceed 2 percent of any reading within its loading range.
(5) It shall be outfitted with a load cell. The testing machine shall be configured with the compression cell on either the lower or upper arm.

8.13.5 Procedure.

8.13.5.1 Specimens shall be clamped into the specimen mounting ring and attached to the fixed arm of a tensile testing machine.

8.13.5.2 The jaws of the movable arm of a tensile testing machine shall be clamped onto the body of the external fitting.

8.13.5.3 The tensile testing machine shall be set in operation but shall stop when the external fitting has pulled from the material or when the material breaks along the specimen mounting ring. The tensile testing machine jaws shall have a velocity of 500 mm/min (20 in./min) under load conditions and shall be uniform at all times.

8.13.5.4 The maximum force registered by the indicating device of the tensile testing machine shall be recorded for each determination.

8.13.6 Report.

8.13.6.1 The pull out strength of each specimen shall be recorded and reported to the nearest 1 N (¼ lbf).

8.13.6.2 The average pull out strength shall be calculated, recorded, and reported to the nearest 1 N (¼ lbf).

8.13.7 Interpretation. The average pull out strength shall be used to determine pass or fail performance.

8.14 Cold Temperature Performance Test Two.

8.14.1 Application. This test method shall apply to visor component materials.

8.14.2 Sample Preparation.

8.14.2.1 Samples shall be at least 1 m (1 yd) squares of material consisting of all layers.

8.14.2.2 Samples shall be conditioned as specified in 8.1.2.

8.14.3 Specimens.

8.14.3.1 Specimens shall be the size specified in ASTM D 2136, *Standard Test Method for Coated Fabrics — Low Temperature Bend Test.*

8.14.3.2 At least five specimens consisting of all layers shall be tested.

8.14.4 Procedure.

8.14.4.1 Specimens shall be tested in accordance with ASTM D 2136, *Standard Test Method for Coated Fabrics — Low Temperature Bend Test*, at a test temperature of –25°C (–13°F).

8.14.4.2 Following this testing, specimens shall be examined for evidence of damage. Damage shall include any breakage, cracks, tears, or separation, but shall not include discoloration along the folded area.

8.14.5 Report. Observations of visible damage shall be recorded and reported for each specimen.

8.14.6 Interpretation.

8.14.6.1 Damage of any one specimen shall constitute failing performance.

8.14.6.2 Rigid visors that do not bend but show no evidence of damage shall still be considered to have passed the test.

8.15 Cut Resistance Test.

8.15.1 Application.

8.15.1.1 This test method shall apply to vapor-protective glove element materials and to vapor-protective footwear element upper materials.

8.15.1.2 Modifications to this test method for evaluation of glove materials shall be as specified in 8.15.7.

8.15.1.3 Modifications to this test method for evaluation of footwear upper materials shall be as specified in 8.15.8.

8.15.2 Sample Preparation.

8.15.2.1 Samples shall be whole gloves or footwear uppers.

8.15.2.2 Samples shall be conditioned as specified in 8.1.2.

8.15.3 Specimens.

8.15.3.1 Specimens shall be the size specified in ASTM F 1790, *Standard Test Methods for Measuring Cut Resistance of Materials Used in Protective Clothing.*

8.15.3.2 At least three specimens, consisting of all layers, shall be tested.

8.15.4 Procedure. Specimens shall be evaluated in accordance with ASTM F 1790, *Standard Test Methods for Measuring Cut Resistance of Materials Used in Protective Clothing*, with the modification that the specimens shall be tested to a specific load with the measurement of distance of blade travel.

8.15.5 Report.

8.15.5.1 The distance of blade travel shall be recorded and reported to the nearest 1 mm (3⁄64 in.) for each sample specimen.

Copyright National Fire Protection Association
Provided by IHS under license with NFPA
No reproduction or networking permitted without license from IHS
Not for Resale

8.15.5.2 The average distance of blade travel in millimeters (inches) shall be recorded and reported for all specimens tested.

8.15.6 Interpretation. The average distance of blade travel shall be used to determine pass/fail performance.

8.15.7 Specific Requirements for Testing Glove Materials.

8.15.7.1 Specimens shall be taken from the back and palm of the glove and shall not include seams.

8.15.7.2 Cut resistance testing shall be performed under a load of 200 g (7 oz).

8.15.8 Specific Requirements for Testing Footwear Upper Materials.

8.15.8.1 Specimens shall be taken from the parts of the footwear upper that provide uniform thickness and shall not include seams.

8.15.8.2 Cut resistance testing shall be performed under a load of 400 g (14 oz).

8.16 Puncture Resistance Test One.

8.16.1 Application.

8.16.1.1 This test shall be applied to vapor-protective glove element materials and to vapor-protective footwear element upper materials.

8.16.1.2 Modifications to this test method for testing glove materials shall be as specified in 8.16.7.

8.16.1.3 Modifications to this test method for testing footwear upper materials shall be as specified in 8.16.8.

8.16.2 Sample Preparation.

8.16.2.1 Samples shall be complete gloves or footwear upper sections.

8.16.2.2 Samples shall be conditioned as specified in 8.1.2.

8.16.3 Specimens.

8.16.3.1 Specimens shall be at least 150 mm (6 in.) square.

8.16.3.2 At least three specimens shall be tested.

8.16.4 Procedure. Specimens shall be tested in accordance with ASTM F 1342, *Standard Test Method for Resistance of Protective Clothing Materials to Puncture*.

8.16.5 Report.

8.16.5.1 The puncture force shall be recorded and reported for each specimen to the nearest 1 N (¼ lbf).

8.16.5.2 The average puncture force shall be recorded and reported for all specimens tested.

8.16.6 Interpretation. The average puncture force shall be used to determine pass or fail performance.

8.16.7 Specific Requirements for Testing Glove Materials.

8.16.7.1 Specimens shall consist of each composite of the palm, palm side of the fingers, and back of the glove used in actual suit glove configuration, with layers arranged in the proper order.

8.16.7.2 Where the specimen composites of the palm, palm side of the fingers, and back of the glove are identical, only one representative composite shall be required to be tested.

8.16.8 Specific Requirements for Testing Footwear Upper Materials.

8.16.8.1 Specimens shall consist of each composite of the footwear item used in the actual suit footwear configuration, with layers arranged in proper order.

8.16.8.2 Specimens shall be taken from the thinnest portion of the footwear upper.

8.17 Glove Hand Function Test.

8.17.1 Application. This test shall apply to vapor-protective glove elements.

8.17.2 Sample Preparation.

8.17.2.1 Samples shall be whole glove pairs.

8.17.2.2 Samples shall be conditioned as specified in 8.1.2.

8.17.2.3 Samples shall be in new, as distributed, condition.

8.17.2.4 Samples shall not receive special softening or flexing treatments prior to testing.

8.17.3 Specimens.

8.17.3.1 Specimens shall be whole glove pairs.

8.17.3.2 At least one specimen shall be tested for each glove size.

8.17.4 Procedures. Testing shall be conducted in accordance with ASTM F 2010, *Standard Test Method for Evaluation of Glove Effects on Wearer Hand Dexterity Using a Modified Pegboard Test*, using the following modifications:

(1) Each available size of gloves shall be evaluated with at least one separate test subject with the same pair of gloves.
(2) A minimum of three different glove pairs shall be evaluated.
(3) Test subjects shall be selected such that their hand dimensions are as close as possible.

8.17.5 Report. The average percent of barehanded control for all tests shall be calculated, recorded, and reported.

8.17.6 Interpretation. The average percent of barehanded control for all tests shall be used to determine pass or fail performance.

8.18 Thermal Protective Performance (TPP) Test.

8.18.1 Application. This test method shall apply to suit, glove, and footwear element materials.

8.18.2 Sample Preparation.

8.18.2.1 Samples shall be 150 × 150 mm ±5 mm (6 × 6 in. ±¼ in.) and shall consist of all layers representative of the element materials to be tested, excluding any areas with special reinforcements or seams.

8.18.2.2 Samples shall be conditioned as specified in 8.1.2.

8.18.3 Specimens.

8.18.3.1 Samples shall be 150 × 150 mm ±5 mm (6 × 6 in. ±¼ in.) and shall consist of all layers representative of the element materials to be tested, excluding any areas with special reinforcements or seams.

8.18.3.2 At least three specimens shall be tested.

8.18.3.3 Specimens shall not be stitched to hold individual layers together.

--`,,```-`-`,,`,,`,`,,`---
Copyright National Fire Protection Association
Provided by IHS under license with NFPA
No reproduction or networking permitted without license from IHS
Not for Resale

8.18.4 Apparatus. The test apparatus specified in ISO 17492, *Clothing for protection against heat and flame — Determination of heat transmission on exposure to both flame and radiant heat.*

8.18.5 Procedure. TPP testing shall be performed in accordance with ISO 17492, *Clothing for protection against heat and flame — Determination of heat transmission on exposure to both flame and radiant heat*, shall be used with the following modifications:

(1) An exposure heat flux of 84 kW/m^2 (2.0 cal/cm^{2}s) shall be used.
(2) The contact configuration shall be used for testing of all material specimens.
(3) The thermal threshold index analysis method shall be used with calculations made using the heat flux in calories per square centimeter per second and reported as the TPP rating.
(4) T-150 quartz tubes shall be used.

8.18.6 Report.

8.18.6.1 The individual test TPP rating of each specimen shall be recorded and reported.

8.18.6.2 The average TPP rating shall be calculated, recorded, and reported.

8.18.6.3 Where a TPP rating is greater than 60, then the TPP rating shall be reported as ">60."

8.18.7 Interpretation.

8.18.7.1 Pass or fail determinations shall be based on the average reported TPP rating of all specimens tested.

8.18.7.2 If an individual result from any test set varies more than ±8 percent from the average result, the results from the test set shall be discarded and another set of specimens shall be tested.

8.19 Puncture Resistance Test Two.

8.19.1 Application. This test method shall apply to vapor-protective footwear element soles.

8.19.2 Sample Preparation.

8.19.2.1 Samples shall be footwear sole sections.

8.19.2.2 Samples shall be conditioned as specified in 8.1.2.

8.19.3 Specimens.

8.19.3.1 Specimens shall be footwear sole sections.

8.19.3.2 At least three specimens shall be tested.

8.19.4 Procedure. Puncture resistance shall be performed in accordance with Section 5 of ANSI Z41, *Standard for Personal Protection — Protective Footwear.*

8.19.5 Report. The force required to puncture the sole reinforcement device of each specimen shall be recorded and reported.

8.19.6 Interpretation. One or more footwear specimens failing this test shall constitute failing performance.

8.20 Abrasion Resistance Test.

8.20.1 Application. This test method shall apply to vapor-protective footwear element soles.

8.20.2 Sample Preparation.

8.20.2.1 Samples shall be footwear soles.

8.20.2.2 Samples shall be conditioned as specified in 8.1.2.

8.20.3 Specimens.

8.20.3.1 Specimens shall be footwear soles.

8.20.3.2 At least three specimens shall be tested.

8.20.4 Procedure. Abrasion resistance shall be performed in accordance with ASTM D 1630, *Standard Test Method for Rubber Property — Abrasion Resistance (NBS Abrader).*

8.20.5 Report. The abrasion resistance rating of each specimen shall be recorded and reported.

8.20.6 Interpretation. One or more footwear specimens failing this test shall constitute failing performance.

8.21 Impact and Compression Test.

8.21.1 Application. This test method shall apply to the toe section of vapor-protective footwear elements.

8.21.2 Sample Preparation.

8.21.2.1 Samples shall be complete footwear toes.

8.21.2.2 Samples shall be conditioned as specified in 8.1.2.

8.21.3 Specimens.

8.21.3.1 Specimens shall be complete footwear toes.

8.21.3.2 At least three specimens shall be tested.

8.21.4 Procedure. Footwear specimens shall be tested in accordance with Section 1.4 of ANSI Z41, *Standard for Personal Protection — Protective Footwear.*

8.21.5 Report. The impact and compression forces for each specimen shall be recorded and reported.

8.21.6 Interpretation. One or more footwear specimens failing this test shall constitute failing performance.

8.22 Ladder Shank Bend Resistance Test.

8.22.1 Application. This test method shall apply to vapor-protective footwear element ladder shanks.

8.22.2 Sample Preparation.

8.22.2.1 Samples shall be footwear ladder shanks.

8.22.2.2 Samples shall be conditioned as specified in 8.1.2.

8.22.3 Specimens.

8.22.3.1 Specimens shall be footwear ladder shanks.

8.22.3.2 At least three specimens shall be tested.

8.22.4 Apparatus.

8.22.4.1 The apparatus shall consist of a tensile testing machine, such as an Instron® or equivalent, that challenges a specimen with a simulated ladder rung.

8.22.4.2 A 32 mm diameter × 50 mm long (1¼ in. diameter × 2 in. long) noncompressible probe shall be mounted on the movable arm.

8.22.4.3 The specimen support assembly shall consist of two 50 mm × 25 mm × 25 mm (2 in. × 1 in. × 1 in.) noncompressible blocks placed 50 mm (2 in.) apart as shown in Figure 8.22.4.3.

8.22.5 Procedure. The ladder shank shall be placed on mounting blocks as it would be oriented toward the ladder when affixed into the protective footwear and subjected to force on its center with the test probe operated at 50 mm/min (2 in./min).

Copyright National Fire Protection Association
Provided by IHS under license with NFPA
No reproduction or networking permitted without license from IHS
Not for Resale

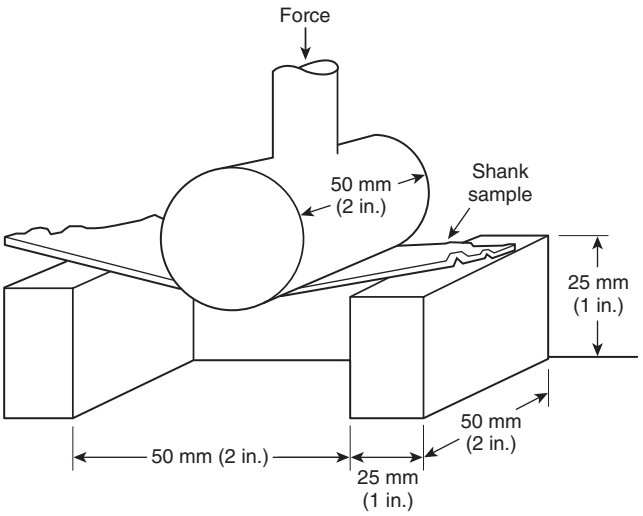

FIGURE 8.22.4.3 Ladder Shank Bend Test Set-Up.

8.22.6 Report.

8.22.6.1 Deflection at 1779 N (400 lbf) shall be recorded and reported to the nearest 1 mm (1/32 in.).

8.22.6.2 The average deflection shall be calculated, recorded, and reported to the nearest 1 mm (1/32 in.).

8.22.7 Interpretation. Pass or fail performance shall be determined using the average deflection for all specimens tested.

8.23 Slip Resistance Test.

8.23.1 Application. This test method shall apply to vapor-protective footwear element soles.

8.23.2 Sample Preparation.

8.23.2.1 Samples shall be complete footwear.

8.23.2.2 Samples shall be conditioned as specified in 8.1.2.

8.23.3 Specimens.

8.23.3.1 Specimens shall be footwear heels and ball of soles.

8.23.3.2 At least three specimens of footwear heels and at least three specimens of ball of soles shall be tested.

8.23.4 Procedure. Slip resistance shall be performed in accordance with ASTM F 489, *Standard Test Method for Static Coefficient of Friction of Shoe Sole and Heel Materials as Measured by the James Machine,* for a dry condition.

8.23.5 Report. The static coefficient of friction average of four readings obtained from each heel and each ball of sole shall be recorded and reported as the average of a total footwear sole.

8.23.6 Interpretation. One or more footwear specimens failing this test shall constitute failing performance.

8.24 Seam/Closure Breaking Strength Test.

8.24.1 Application.

8.24.1.1 This test shall be applied to vapor-protective suit element seams and closure assembly used in the construction of the vapor-protective suit, including at least suit and suit–visor seams. Where the suit element consists of multiple separable layers, the test shall be applied to the seams and closure assemblies of each separable layer.

8.24.1.2 Modifications to this test method for testing seams shall be as specified in 8.24.7.

8.24.1.3 Modifications to this test method for testing closure assemblies shall be as specified in 8.24.8.

8.24.2 Sample Preparation.

8.24.2.1 Samples shall be 0.5 m (18 in.) lengths of material seam or closure assembly representative of each seam or closure assembly type used in the suit.

8.24.2.2 A straight seam shall be permitted to be cut from the finished suit or shall be permitted to be prepared by joining two pieces of the suit material in a manner representing the actual seam construction in the finished vapor-protective ensemble.

8.24.2.3 Samples shall be conditioned as specified in 8.1.2.

8.24.3 Specimens.

8.24.3.1 Specimens shall be the size specified in ASTM D 751, *Standard Methods of Testing Coated Fabric.*

8.24.3.2 At least five specimens of each seam or closure assembly type shall be tested.

8.24.4 Procedure. All seams and closure assemblies shall be tested in accordance with ASTM D 751, *Standard Methods of Testing Coated Fabrics.* The test machine shall be operated at a rate of 305 mm/min (12 in./min).

8.24.5 Report.

8.24.5.1 The breaking strength for each seam or closure assembly specimen shall be recorded and reported.

8.24.5.2 The average breaking strength for each seam or closure assembly type shall be recorded and reported.

8.24.5.3 The type of seams and closure assemblies tested and whether the specimens were cut from the finished suit or prepared from fabric samples shall be recorded and reported.

8.24.6 Interpretation. The average seam breaking strength for each seam type shall be used to determine pass or fail performance.

8.24.7 Specific Procedures for Testing Seams. Samples for conditioning shall include 150 mm (6 in.) of material on either side of the seam.

8.24.8 Specific Procedures for Testing Closure Assemblies. Samples for conditioning shall include 150 mm (6 in.) of material on either side of the closure.

8.25 Closure Penetration Resistance Test.

8.25.1 Application. This test method shall apply to vapor-protective ensemble closure assemblies.

8.25.2 Sample Preparation.

8.25.2.1 Samples shall be complete vapor-protective ensembles.

8.25.2.2 Samples shall be conditioned as specified in 8.1.7.

8.25.3 Specimens.

8.25.3.1 Specimens shall be the suit closure assembly consisting of the closure in combination with the seam attaching the closure to the suit.

Copyright National Fire Protection Association
Provided by IHS under license with NFPA
No reproduction or networking permitted without license from IHS
Not for Resale

8.25.3.2 At least three specimens shall be tested.

8.25.4 Procedure. Penetration resistance testing of suit closure assemblies shall be conducted in accordance with ASTM F 903, *Standard Test Method for Resistance of Protective Clothing Materials to Penetration by Liquids*, Procedure C, using the following modifications:

(1) All tests shall be conducted at 25°C, ±3°C (77°F, ±5°F).
(2) The test cell shall be modified to accommodate the shape of the suit closure assembly without affecting other parts of the test procedure. The Plexiglas® shield shall be omitted from the test cell.
(3) Use of blotting paper at the end of the test shall be permitted to assist in the visual observation of liquid penetration. Visually observed chemical on the blotting paper shall constitute failure of this test.
(4) An observation to determine specimen penetration shall be made at the end of the chemical contact period.

8.25.5 Report.

8.25.5.1 The pass or fail results for each chemical tested shall be recorded and reported.

8.25.5.2 The identification of the locations where penetration occurs, if discernible, shall be recorded and reported.

8.25.6 Interpretation. Observed liquid penetration at the end of the test for any specimen shall constitute failure of this test.

8.26 Exhaust Valve Inward Leakage Test.

8.26.1 Application. This test method shall apply to vapor-protective suit exhaust valves.

8.26.2 Sample Preparation.

8.26.2.1 Samples shall be individual vapor-protective suit exhaust valves including mounting means.

8.26.2.2 Samples shall be conditioned as specified in 8.1.2.

8.26.3 Specimens.

8.26.3.1 Specimens shall be individual vapor-protective suit exhaust valves including mounting means.

8.26.3.2 At least 10 specimens shall be tested.

8.26.4 Apparatus. The test fixture used to measure exhaust valve inward leakage shall have the following characteristics:

(1) The fixture shall allow mounting of an exhaust valve such that an airtight seal is achieved between the valve body and the fixture.
(2) The fixture shall provide for the application of suction from a vacuum pump capable of sustaining a −25 mm (−1 in.) water column gauge vacuum.
(3) The fixture shall include a pressure gauge or manometer capable of measuring pressures ranging from −25 mm to 76 mm, ±6 mm (−1 in. to 3 in., ±¼ in.) water column gauge.
(4) The fixture shall allow for the measurement of flow into the valve (valve exterior to valve interior sides) with a flow-measuring device capable of measuring flow rates from at least 0 ml/min to 100 ml/min, ±1 ml/min (0 $in.^3$/min to 6.1 $in.^3$/min, ±0.6 $in.^3$/min).

8.26.5 Procedure. The exhaust valve shall be mounted in the test fixture and a suction of −25 mm (−1 in.) water column gauge vacuum shall be applied to the side of the valve representing the suit interior for 30 seconds while the flow rate into the valve is measured.

8.26.6 Report.

8.26.6.1 The inward leakage flow rate shall be recorded and reported for each specimen.

8.26.6.2 The average inward leakage of all specimens shall be calculated, recorded, and reported.

8.26.7 Interpretation. The average inward leakage shall be used to determine pass or fail performance.

8.27 Overall Ensemble Flash Test.

8.27.1 Application. This test method shall apply to vapor-protective ensembles.

8.27.2 Sample Preparation.

8.27.2.1 Samples shall be complete vapor-protective ensembles.

8.27.2.2 Samples shall include any additional protective clothing components and equipment that are necessary to provide full-body flash protection to the wearer and shall be tested in conjunction with the vapor-protective ensemble.

8.27.2.3 Samples shall be conditioned as specified in 8.1.2.

8.27.3 Specimens.

8.27.3.1 Specimens shall be complete vapor-protective ensembles.

8.27.3.2 Specimens shall include any additional protective clothing components and equipment that are necessary to provide full-body flash protection to the wearer and shall be tested in conjunction with the vapor-protective ensemble.

8.27.3.3 At least one specimen shall be tested.

8.27.4 Apparatus.

8.27.4.1 A human form mannequin shall be used to support the protective suit during chemical flash fire testing. The mannequin shall be coated with a suitable flame-retardant coating.

8.27.4.2 A one-piece flame-retardant coverall shall be placed over the mannequin.

8.27.4.3 The protective ensemble to be tested shall be placed on the mannequin, over the flame-resistant clothing, in accordance with the manufacturer's instructions.

8.27.4.4 A flash chamber shall be constructed as illustrated in Figure 8.27.4.4 and shall include the following:

(1) It shall have an internal width and depth of 2 m, ±100 mm (6½ ft, ±4 in.) and a height of 2.5 m, ±200 mm (8 ft, ±8 in.).
(2) It shall be constructed of 50 mm × 100 mm (2 in. × 4 in.) framing lumber or other suitable structural material. Fire wall, 20 mm (¾ in.), or other suitable flame-resistant paneling, shall be used on the opposite two walls of the chamber. A piece of 13 mm (½ in.) heat-tempered safety glass shall be used on the remaining walls for multiple viewing points during testing. At least one of the glass walls shall be attached by a means that allows for easy removal of the mannequin. Both glass walls shall be configured to achieve gastight seals with the chamber.
(3) All fire wall seams shall be taped and the interior walls of the chamber coated with a suitable flame-retardant material.

Copyright National Fire Protection Association
Provided by IHS under license with NFPA
No reproduction or networking permitted without license from IHS
Not for Resale

(4) It shall have a port for filling the chamber with propane gas located as shown in Figure 8.27.4.4. The port shall allow isolation of the propane source through a valve. The port shall be leakfree with respect to the outside environment.
(5) It shall have two ports for electric ignitors located as in Figure 8.27.4.4. The port shall be leakfree with respect to the outside environment.
(6) It shall have a top that allows containment of propane gas within the chamber during filling and venting of flash pressure after ignition.
(7) A suitable stand that allows the mannequin to be positioned 305 mm, ±25 mm (1 ft, ±1 in.) above the chamber floor shall be constructed.

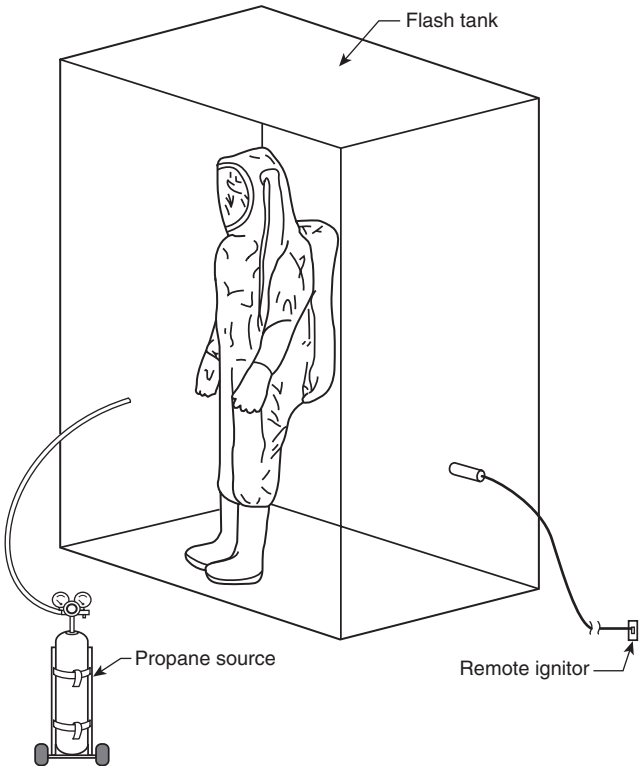

FIGURE 8.27.4.4 Overall Ensemble Chemical Flash Chamber.

8.27.5 Procedure.

8.27.5.1 Each protective ensemble selected shall be tested for gastight integrity in accordance with ASTM F 1052, *Standard Test Method for Pressure Testing of Vapor-Protective Ensembles.*

8.27.5.2 The suited mannequin shall be placed on the stand in the center of the flash chamber in an upright stationary position.

8.27.5.3 Propane gas, at 99 percent purity or better, shall be metered into the chamber at a delivery pressure of 172.3 kPa, ±13.8 kPa (25 psi, ±2 psi) and rate of 0.16 m^3/min, ±0.01 m^3/min (5½ ft^3/min, ±½ ft^3/min). The concentration of propane within the chamber shall be sufficient to produce a visible chemical flash fire lasting 7 seconds, ±1 second. The concentration of the propane shall be permitted to be checked by a combustible gas meter or similar detector.

8.27.5.4 The flash chamber shall be viewed at both vantage points, front and back, throughout the test. Video documentation shall also be conducted from the front vantage point.

8.27.5.5 The chamber atmosphere shall be remotely ignited at 30 seconds, ±5 seconds after the chamber has been filled with propane gas.

8.27.5.6 The suited mannequin shall not be removed until all surfaces have cooled to ambient temperature.

8.27.5.7 The protective ensemble shall be removed from the mannequin and examined visually for physical signs of damage from thermal exposure.

8.27.5.8 A gastight integrity test shall be performed on the ensemble in accordance with Section 8.2, Gastight Integrity Test, following the chemical flash fire exposure.

8.27.5.9 Following gastight integrity testing, the ensemble shall be donned by a test subject and evaluated for visual acuity.

8.27.5.9.1 The test subject shall have a minimum visual acuity of 20/20 in each eye, uncorrected or corrected with contact lenses, as determined in a visual acuity test or doctor's examination.

8.27.5.9.2 Visual acuity testing from within the ensemble shall be conducted using a standard 6.1 m (20 ft) eye chart with a normal lighting range of 100 to 150 ft-candles at the chart and with the test subject positioned at a distance of 6.1 m (20 ft) from the chart.

8.27.5.9.3 The test subject shall then read the standard eye chart through the lens of the SCBA facepiece and ensemble visor(s) to determine his or her visual acuity.

8.27.5.10 All testing shall be performed at a temperature of 24°C, ±11°C (75°F, ±20°F) and a relative humidity of 70 percent, ±25 percent. Tests shall not be conducted outdoors during precipitation.

8.27.6 Report.

8.27.6.1 The before and after gastight integrity test results, afterflame time, and visor clarity shall be recorded and reported for each test specimen.

8.27.6.2 An illustration of the protective ensemble, as shown in Figure 8.27.6.2, shall be prepared, and the location of any damage shall be recorded and reported. Damage shall include but not be limited to charring, blistering, evidence of material melting, delamination, or destruction of any ensemble components.

8.27.6.3 Separate illustrations shall be prepared for over covers if tested with the protective ensemble.

8.27.7 Interpretation.

8.27.7.1 The maximum of afterflame time among all specimens shall be used to determine compliance with the afterflame requirement.

8.27.7.2 The lowest ending inflation test pressure shall be used to determine compliance to the post flash fire simulation inflation test requirements.

8.27.7.3 The visual acuity of the test subject inside the ensemble shall be used for determining pass or fail compliance with the post flash fire simulation visual acuity requirements.

Copyright National Fire Protection Association
Provided by IHS under license with NFPA
No reproduction or networking permitted without license from IHS
Not for Resale

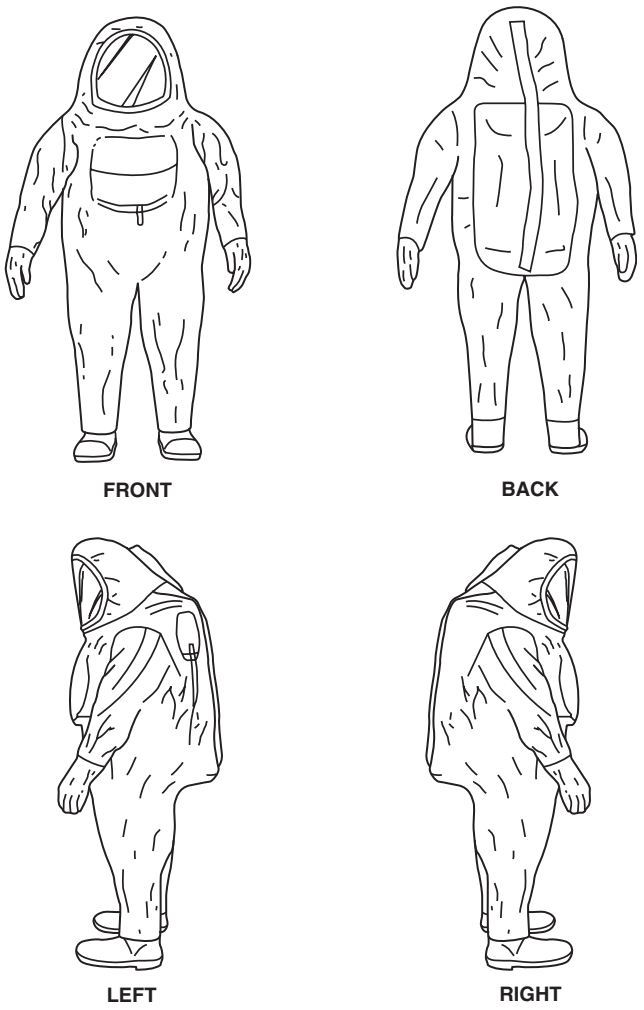

FIGURE 8.27.6.2 Suit Diagram (for noting damage locations).

Annex A Explanatory Material

Annex A is not a part of the requirements of this NFPA document but is included for informational purposes only. This annex contains explanatory material, numbered to correspond with the applicable text paragraphs.

A.1.1 No single personal protective ensemble can currently protect the wearer from exposure to all hazards. OSHA/EPA Levels A, B, and C describe recommended personal protective ensembles. These levels are defined in the Hazardous Waste Operations and Emergency Response Standard (HAZWOPER), 29 CFR 1910.120, Appendix B, as follows:

Level A – To be selected when the greatest level of skin, respiratory and eye protection is required.

Level B – The highest level of respiratory protection is necessary but a lesser level of skin protection is needed.

Level C – The concentration(s) and type(s) of airborne substances is known and the criteria for using air-purifying respirators are met.

While these definitions provide guidelines and a framework for discussing PPE, the descriptive narrative in these levels does not set minimum performance criteria required for specific threats, such as chemical permeation resistance and physical property characteristics. Thus the use of these general "levels" of protection does not accurately describe the protective ability of such ensembles and does not assure that the wearer is adequately protected from any specific hazards. Relying solely on these nomenclatures could result in exposure above acceptable exposure limits, or an unnecessary reduction in operational effectiveness through lack of mobility, decreased dexterity, or reduced operational mission duration. Proper selection of Personal Protective Equipment (PPE) for emergency response should be based upon a careful assessment of two factors: 1) the expected hazards and anticipated exposures to be present at the scene, and 2) the probable impact of those hazards based upon the mission role of the emergency response organization.

Homeland Security Presidential Directive (HSPD) 8 defines personal protective equipment in terms of nationally-recognized standards and NIOSH standards. The NFPA standards require third-party certification of products; product manufacturers may not claim compliance with them unless their product is fully certified, and listed and labeled by an independent third party certification organization in accordance with the standard. The NIOSH standards require government certification and product manufacturers may not claim compliance with them unless their product is certified, listed and labeled by NIOSH. Several of these standards have already been officially adopted by the Department of Homeland Security.

The following information is provided to assist emergency response organizations in transitioning from Levels A, B, and C to compliant protection-based standards terminology. Because the OSHA/EPA Levels are expressed in more general terms than the standards and do not include testing to determine protection capability, it is not possible to "map" the Levels to specific standards. However, it is possible to look at specific configurations and suggest their OSHA/EPA Level based on the definitions provided above. Some examples of ensembles and the approximate corresponding levels are provided in the table below.

Emergency response organizations are cautioned to examine their hazard and mission requirements closely, and select appropriate performance standards. All personal protective equipment should be employed in accordance with federal OSHA standards, including those contained in 29 CFR 1910, Subpart H – Hazardous Materials (including 29 CFR 1910.120 – Hazardous Waste Operations and Emergency Response); 29 CFR 1901, Subpart I – Personal Protective Equipment (including 29 CFR 1901.134 – Respiratory Protection) that include requirements for safety and health plans, medical evaluation, and training.

Types of personal protective equipment and information on related standards, certifications, and products are all available on the DHS-sponsored *Responder Knowledge Base* website (http://www.rkb.mipt.org).

A.1.1.1 This standard does not include any specific design or performance requirements or test methods that demonstrate protection from particulates such as radiological particulates or particulate toxins. Protection from particulates is predicated on the performance provided by the overall ensemble leakage required and tested in 7.6.4 and Section 8.8.

Copyright National Fire Protection Association
Provided by IHS under license with NFPA
No reproduction or networking permitted without license from IHS
Not for Resale

Ensemble Description Using Performance-Based Standard(s)	OSHA/EPA Level
NFPA 1991, 2005 edition [CBR(N) protection now included in mandatory requirements], worn with NIOSH CBRN SCBA	A
NFPA 1991, 2000 edition with C/B optional requirements, worn with NIOSH CBRN SCBA	A
NFPA 1994 Class 1 worn with NIOSH CBRN SCBA	A
NFPA 1994 Class 2 worn with NIOSH CBRN SCBA	B
NFPA 1994 Class 2 worn with NIOSH CBRN APR	C
NFPA 1994 Class 3 worn with NIOSH CBRN SCBA	C
NFPA 1994 Class 3 worn with NIOSH CBRN APR	C

Organizations responsible for specialized hazardous materials response functions including ionizing radiation, cryogenics, or fire fighting applications should use protective clothing and equipment specifically designed for protection for those operations.

A.1.1.3 At the time this standard was prepared, the characteristics of a dust or particulate flash fire had not been defined by this Committee and, therefore, the Committee has chosen not to assume that these exposures are similar to a chemical flash fire nor are the requirements for chemical flash fire protection adequate as minimum requirements for dust or particulate flash fire protection.

A.1.1.7 The appropriate respiratory protection for this ensemble is a self-contained breathing apparatus that is certified to NFPA 1981, *Standard on Open-Circuit Self-Contained Breathing Apparatus for Fire and Emergency Services*, and certified to NIOSH requirements for CBRN SCBA.

A.1.2.1 The requirements of this standard were developed taking into consideration the needs of emergency response personnel for hazardous materials emergencies. This application can entail a variety of chemical, physical, and other hazards. Other protection needs, such as for routine industrial operations, should warrant a thorough review of the requirements in this standard to determine applicability.

There are no requirements in this standard that address reuse or multiple wearings of vapor-protective ensembles. Users are cautioned that exposure of vapor-protective ensembles to chemicals could require disposal, particularly if the effectiveness of decontamination cannot be assessed.

A.1.2.2 The testing requirements in Chapter 8 of this standard are intended to establish material performance, not the limitations of the working environment for technical rescue.

Users should be advised that if unusual conditions prevail, or if there are signs of abuse or mutilation of the protective ensemble or any element or component thereof, or if modifications or replacements are made or accessories are added without authorization of the protective ensemble element manufacturer, the margin of protection could be reduced.

Users should also be advised that the protective properties in new vapor-protective ensembles, as required by this standard, can diminish as the product is worn and ages.

It is strongly recommended that purchasers of vapor-protective ensembles consider the following circumstances:

(1) Emergency response personnel must wear many items of protective clothing and equipment. Any interference by one item of another item's use could result in inefficient operations or unsafe situations.
(2) Different breathing apparatus, communications systems, cooling devices, and other protective equipment might not be equally accommodated by each vapor-protective suit.
(3) Specification of additional reinforcement in high-wear or load-bearing areas, such as the knees, elbows, shoulders, and back, can be necessary. Reinforcing materials should be the same as the suit material. Purchasers are cautioned that additional weight caused by excessive reinforcement could lead to fatigue or injury to the wearer or shorten the life of the suit.

A.1.3.2 Organizations responsible for specialized chemical response functions including radiological, biological, cryogenics, or fire-fighting applications should use protective clothing and equipment specifically designed for those activities.

A.1.3.5 Emergency response organizations are cautioned that accessories are not part of the certified product but could be attached to a certified product by a means not engineered, manufactured, or authorized by the certified product manufacturer.

Emergency response organizations are cautioned that if an accessory or its means of attachment causes the structural integrity of the certified product to be compromised, the certified product might not be compliant with the standard with which it was originally certified as compliant. Additionally, if an accessory or the accessory's means of attachment are not designed and manufactured from suitable materials for the hazardous environments of emergency incidents, the failure of the accessory, or its means of attachment, could cause injury to the emergency responder.

Because the aftermarket for accessories for certified products is so broad, emergency response organizations are advised to contact both the accessory manufacturer and the manufacturer of the certified product and verify that the accessory and its means of attachment are suitable for use in the intended emergency response environment. Emergency response organizations should seek and receive written documentation to validate the following information from the accessory manufacturer:

(1) Accessories for a certified product, and the means of attachment, will not degrade the designed protection or performance of the certified product below the requirements of the standard to which it was designed, manufactured, tested, and certified.
(2) The accessory, when properly attached to the certified product, will not interfere with form, fit, or function of any of the certified product or with the form, fit, and function of any of the certified product's component parts.

Users are also cautioned that the means of attachment for accessories that fail to safely and securely attach the accessory to a certified product can allow the accessory to

Copyright National Fire Protection Association
Provided by IHS under license with NFPA
No reproduction or networking permitted without license from IHS
Not for Resale

become inadvertently dislodged from the certified product, possibly posing a risk to emergency response personnel in the vicinity.

A.1.4 Metric units are used throughout this standard with U.S. approximate values provided in parentheses. The metric units are the requirements.

A.3.2.1 Approved. The National Fire Protection Association does not approve, inspect, or certify any installations, procedures, equipment, or materials; nor does it approve or evaluate testing laboratories. In determining the acceptability of installations, procedures, equipment, or materials, the authority having jurisdiction may base acceptance on compliance with NFPA or other appropriate standards. In the absence of such standards, said authority may require evidence of proper installation, procedure, or use. The authority having jurisdiction may also refer to the listings or labeling practices of an organization that is concerned with product evaluations and is thus in a position to determine compliance with appropriate standards for the current production of listed items.

A.3.2.2 Authority Having Jurisdiction (AHJ). The phrase "authority having jurisdiction," or its acronym AHJ, is used in NFPA documents in a broad manner, since jurisdictions and approval agencies vary, as do their responsibilities. Where public safety is primary, the authority having jurisdiction may be a federal, state, local, or other regional department or individual such as a fire chief; fire marshal; chief of a fire prevention bureau, labor department, or health department; building official; electrical inspector; or others having statutory authority. For insurance purposes, an insurance inspection department, rating bureau, or other insurance company representative may be the authority having jurisdiction. In many circumstances, the property owner or his or her designated agent assumes the role of the authority having jurisdiction; at government installations, the commanding officer or departmental official may be the authority having jurisdiction.

A.3.2.4 Listed. The means for identifying listed equipment may vary for each organization concerned with product evaluation; some organizations do not recognize equipment as listed unless it is also labeled. The authority having jurisdiction should utilize the system employed by the listing organization to identify a listed product.

A.3.3 For the purposes of this standard, the terms defined in this section shall have the meanings stated unless modified by the mandatory requirements of this standard. Terms used in the present tense shall include the past and future tense. Terms used in the masculine gender shall include female and neuter genders, terms used in the singular shall include the plural, and terms used in the plural shall include the singular.

A.3.3.11 Chemical Flash Fire. A policy of wearing protective clothing is needed that recognizes the significant threat to fire fighters who can be exposed to flash fires in either structural fire-fighting or hazardous materials environments. It is hoped that fire fighters utilize awareness training on burn injuries caused by the ignition of the environment. There is a distinct difference between chemical flash fires and flashovers occurring in structural fire-fighting environments.

Flashover is a phenomenon that generates temperatures in the range of 650°C to 815°C (1200°F to 1500°F). A chemical flash fire requires an ignition source and a chemical atmosphere that contains a concentration above the lower explosive limit (LEL) of the chemical. Chemical flash fires generate heat from 540°C to 1040°C (1000°F to 1900°F). As a rule, a structural fire flashover is confined to a designated area with walls as a boundary. The size of a chemical flash fire depends on the size of the gas or vapor cloud and, when ignited, the flame front expands outward in the form of a fireball. The resulting effect of the fireball's energy with respect to radiant heat significantly enlarges the hazard areas around the gas released.

A.3.3.13 Chemical-Protective Layer. The chemical-protective layer is considered as "primary material" and can be configured as a separate layer or as composite with other primary materials. The chemical-protective layer can depend on the other primary material to provide the physical protection.

A.3.3.16 Component(s). Components include items required for the design and construction of the product and are evaluated and tested individually, or are evaluated and tested as a part of the whole product.

A.3.3.20 Cryogenic Liquid. Cryogenic liquids include, but are not limited to, helium, nitrogen, and oxygen.

A.3.3.24 Ensemble Elements. The vapor-protective ensemble elements are the suit (the garment), the gloves, and the footwear.

A.3.3.26 External Fittings. Airline, cooling device, and communications system connections or pass-throughs, and glove and boot interface materials are examples of external fittings.

A.3.3.33 Hazardous Materials. Hazardous materials are any solid, particulate, liquid, gas, aerosol, or mixture thereof that can cause harm to the human body through respiration, ingestion, skin absorption, injection, or contact.

A.3.3.34 Hazardous Materials Emergencies. Hazardous materials emergencies are a special subset of activities during hazardous materials incidents. These emergencies are characterized as activity where significant hazards exist to personnel or the environment. Emergency activity takes place in the hot zone as opposed to support functions, which take place in the warm and cold zones.

A.3.3.37 Liquefied Gas. Examples of liquefied gases include, but are not limited to, ammonia, 1,2-butadiene, chlorine, ethylene oxide, hydrogen chloride, liquefied petroleum gas, and methyl chloride. Testing in this standard is only conducted for a limited number of liquefied gases. Users should consult the technical data package to determine which liquefied gases have been tested with the suit's primary materials.

A.3.3.47 Primary Materials. The primary materials can include, in addition to the materials noted in 3.3.47, the wearer's respiratory protective equipment where designed to be worn outside the vapor-protective ensemble, the umbilical air hose, and all other exposed respiratory protective equipment materials designed to protect the wearer's breathing air and air path.

A.3.3.53 Radioactive Particulate. Ionizing radiation includes alpha particles, beta particles, x-rays, and gamma rays. Ionizing radiation derives its name from its ability to "ionize" atoms and molecules with which it interacts. In other words, ionizing particles and energy waves possess enough energy to literally knock apart the atomic structure of the material and break chemical bonds. This rearrangement of the atomic structure of a material results in a release of a great deal of energy in a very small area. When this occurs in living tissue, the tissue can be severely damaged or destroyed. Additionally, the atomic

Copyright National Fire Protection Association
Provided by IHS under license with NFPA
No reproduction or networking permitted without license from IHS
Not for Resale

particles knocked loose by the radiation can themselves ionize other atoms, propagating the damage.

A.3.3.65 Vapor-Protective Ensemble. The vapor-protective ensemble elements are the suit, gloves, and footwear.

A.3.3.67 Vapor-Protective Ensemble with Optional Chemical Flash Fire Escape Protection. Ensembles meeting these requirements are intended to offer the wearer limited protection for escape only in situations that can result in chemical flash fires. This requirement does not imply any protection for any fire-fighting activities but offers minimum protection from the thermal effects of a chemical flash fire with no loss of suit gastight integrity.

A.3.3.68 Vapor-Protective Ensemble with Optional Liquefied Gas Protection. Ensembles meeting these requirements are intended to offer the wearer limited protection for exposure to liquefied gases for a maximum exposure time of 15 minutes.

A.3.3.69 Vapor-Protective Footwear. Vapor-protective footwear includes boots or outer boots in conjunction with booties.

A.4.1.4 The compliance of vapor-protective ensembles in meeting this standard is determined by the NFPA battery of chemicals. Each vapor-protective suit meeting the requirements of this standard has a list of chemicals or chemical mixtures associated with it.

A.4.1.7 The National Fire Protection Association (NFPA), from time to time, has received complaints that certain items of fire and emergency services protective clothing or protective equipment might be carrying labels falsely identifying them as compliant with an NFPA standard. The requirement for placing the certification organization's mark on the product label is to help ensure that the purchaser can readily determine compliance of the respective product through independent third-party certification.

A.4.2.1 The certification organization should have a sufficient breadth of interest and activity so that the loss or award of a specific business contract would not be a determining factor in the financial well-being of the agency.

A.4.2.5 The contractual provisions covering a certification program should contain clauses advising the manufacturer that if requirements change, the product should be brought into compliance with the new requirements by a stated effective date through a compliance review program involving all currently listed products.

Without such clauses, certifiers would not be able to move quickly to protect their name, marks, or reputation. A product safety certification program would be deficient without these contractual provisions and the administrative means to back them up.

A.4.2.6 Investigative procedures are important elements of an effective and meaningful product safety certification program. A preliminary review should be carried out on products submitted to the agency before any major testing is undertaken.

A.4.2.7.1 For further information and guidance on recall programs, see 21 CFR 7, Subpart C.

A.4.2.9 Such inspections should include, in most instances, witnessing of production tests. With certain products, the certification organization inspectors should select samples from the production line and submit them to the main laboratory for countercheck testing. With other products, it can be desirable to purchase samples in the open market for test purposes.

A.4.3.16 Manufacturers are not limited in their approaches for designing vapor-protective ensembles compliant with this standard. If the suit design uses combinations of materials or garments to meet one part of the standard, then the same combinations must be assessed for all parts of the standard. For example, if a two-part visor is used such that the visor materials meet the chemical resistance requirement, the outer visor cannot be removed to meet the light transmission requirement. The same configuration must be used for all performance requirements.

A.4.6.1 ISO 27, *Guidelines for corrective action to be taken by a certification body in the event of misuse of its mark of conformity,* is a component of accreditation of certification organizations specified in 4.1.3 and 4.2.3 of this standard. Those paragraphs contain a mandatory reference to ISO 65, *General requirements for bodies operating product certification systems,* in which ISO 27 is referenced.

A.4.6.2 By definition, a hazard might involve a condition that can be imminently dangerous to the end user. With this thought in mind, the investigation should be started immediately and completed in as timely a manner as is appropriate considering the particulars of the hazard being investigated.

A.4.6.11 The determination of the appropriate corrective action for the certification organization to initiate should take into consideration the severity of the product hazard and its potential consequences to the safety and health of end users. The scope of testing and evaluation should consider, among other things, testing to the requirements of the standard to which the product was listed as compliant, the age of the product, the type of use and conditions to which the compliant product has been exposed, care and maintenance that has been provided, the use of expertise on technical matters outside the certification organization's area of competence, and product hazards caused by circumstances not anticipated by the requirements of the applicable standard. As a guideline for determining which is more appropriate, a safety alert or a product recall, the following product hazard characteristics are provided, which are based on 42 CFR 84, Subpart E, §84.41:

(1) *Critical:* A product hazard that judgment and experience indicate is likely to result in a condition immediately hazardous to life or health (IHLH) for individuals using or depending on the compliant product. If an IHLH condition occurs, the user will sustain, or will be *likely* to sustain, an injury of a severity that could result in loss of life, significant bodily injury, or loss of bodily function, either immediately or at some point in the future.

(2) *Major A:* A product hazard, other than *Critical*, that is likely to result in failure to the degree that the compliant product does not provide any protection or reduces protection, *and is not detectable to the user.* The phrase *reduces protection* means the failure of specific protective design(s) or feature(s) that results in degradation of protection in advance of reasonable life expectancy to the point that continued use of the product is *likely* to cause physical harm to the user, or where continued degradation could lead to IHLH conditions.

Copyright National Fire Protection Association
Provided by IHS under license with NFPA
No reproduction or networking permitted without license from IHS
Not for Resale

(3) *Major B:* A product hazard, other than *Critical* or *Major A*, that is likely to result in reduced protection and is detectable to the user. The phrase *reduces protection* means the failure of specific protective design(s) or feature(s) that results in degradation of protection in advance of reasonable life expectancy to the point that continued use of the product is *likely* to cause physical harm to the user, or where continued degradation could lead to IHLH conditions.
(4) *Minor:* A product hazard, other than *Critical, Major A*, or *Major B,* that is not likely to materially reduce the usability of the compliant product for its intended purpose or a product hazard that is a departure from the established applicable standard and has little bearing on the effective use or operation of the compliant product for its intended purpose.

Where the facts are conclusive, based on characteristics of the hazard classified as indicated previously, the certification organization should consider initiating the following corrective actions with the authorized and responsible parties:

(1) *Critical* product hazard characteristics: product recall
(2) *Major A* product hazard characteristics: product recall or safety alert, depending on the nature of the specific product hazard
(3) *Major B* product hazard characteristics: safety alert or no action, depending on the nature of the specific product hazard
(4) *Minor* product hazard characteristic: no action

A.4.6.13 Reports, proposals, and proposed TIAs should be addressed to the technical committee that is responsible for the applicable standard and be sent in care of Standards Administration, NFPA, 1 Batterymarch Park, Quincy, MA 02169-7471.

A.5.1.1.9 Examples of other clothing items that can be required to be worn for meeting performance criteria in this standard include, but are not limited to, over garments, over gloves, and over boots. Purchasers should realize that all items specified by the manufacturer and used to determine compliance with this standard must be worn together. Otherwise, the certification of the suit is voided.

A.5.2 Purchasers should consider testing prospective suits by evaluating their comfort, function, fit, and integrity as specified in ASTM F 1154, *Standard Practices for Qualitatively Evaluating the Comfort, Fit, Function, and Integrity of Chemical Protective Suit Ensembles.* These practices entail having a test subject don the suit and wear it during a series of exercises. Two exercise batteries are used. The first includes a number of in-place exercises such as toe touches, deep knee bends, and cross arm reaches that are intended to assess the subject's mobility and create stresses on different parts of the suit. The second involves more realistic activities such as crawling, climbing a ladder, turning a valve, operating a hand truck, and coiling a hose. These tasks attempt to simulate actions that an emergency responder might undertake during a hazardous materials emergency.

Purchasers and users should be aware that no reliable, nondestructive methods exist to determine the level of contamination for exposed vapor-protective ensembles or their materials. Therefore, users will not be able to determine how effective decontamination methods are in removing chemical contamination from the vapor-protective suit. Vapor-protective ensembles that have received a significant exposure to a chemical or chemical mixture in the estimation of the responsible supervisor should be disposed of.

A.5.2.5 Purchasers should follow the instructions provided by the manufacturer for completing the log book for their own means of recording suit use and maintenance and also for documenting levels of contamination when returning suits to the manufacturer.

The manufacturer should prepare the log book so that it provides for at least the following data entries:

(1) Dates of each inspection, inspection findings, and the name of the inspector
(2) Dates of each use, the length of use, and the user's name
(3) Names of chemicals the suit is exposed to including the length and concentration of exposure
(4) Dates of all repairs, including a description of the repairs, and the name of the person making the repairs
(5) Dates and types of decontamination the suit is subjected to, and the name of the person or facility responsible for the decontamination
(6) Date the suit is taken out of service and the reason for action
(7) Date the suit is returned to the manufacturer and the reason for the return

A.5.3.1.1 Purchasers should use the technical data package to compare suit performance data when purchasing vapor-protective ensembles. The purchaser should determine the relative ranking of performance data to aid in this selection process.

A.5.3.1.2 Purchasers should request that all documentation and performance data be provided in a format that allows easy comparison of products to aid selection.

A.5.3.1.4 Manufacturers should determine the size range of their ensembles by matching human dimensions with available suit sizes. These determinations should account for other clothing and equipment to be worn by the wearer as recommended by the manufacturer. Assessment of acceptable fit should be determined by using ASTM F 1154, *Standard Practices for Qualitatively Evaluating the Comfort, Fit, Function, and Integrity of Chemical Protective Suit Ensembles.*

A.6.1.5 Exhaust valves should be examined periodically for evidence of damage. Ideally this examination should take place each time the suit is pressure tested for vaportight integrity. During the examination, exhaust valves should be as follows:

(1) Free of any lint or other particles that can interfere with valve closure
(2) Show no evidence of discoloration or physical degradation
(3) Have intact gaskets for installation into the suit

Care should be taken for properly reinstalling exhaust valves into the suit.

A.7.4.6 The Glove Hand Function Test is intended to evaluate the ability of a user to accomplish a task while wearing the glove system of the vapor-protective ensemble. The test compares the time required for a user, wearing the glove system, to place a series of pegs into a specifically designed pegboard with the time required to accomplish the same task with no gloves on (barehanded). The results of the test are reported as a "percent increase over barehanded control." A value of 100 percent for a glove system would indicate that the user was able to accomplish the task of placing the pegs in the pegboard as quickly as he or she were able to do so while bare-

Copyright National Fire Protection Association
Provided by IHS under license with NFPA
No reproduction or networking permitted without license from IHS
Not for Resale

handed. A value greater than 100 percent indicates that a greater time was required to accomplish the task while wearing the gloves. For example, a value of 400 percent increase over barehanded indicates that a user needed four times longer to accomplish the task while wearing the glove system than he or she required barehanded.

A.8.8.5.15 One example of an appropriate analytical technique is NIOSH Method 6602, which uses a gas chromatograph equipped with an electron capture detector.

Annex B Informational References

B.1 Referenced Publications. The following documents or portions thereof are referenced within this standard for informational purposes only and are thus not part of the requirements of this document unless also listed in Chapter 2.

B.1.1 NFPA Publications. National Fire Protection Association, 1 Batterymarch Park, Quincy, MA 02169-7471.

NFPA 1981, *Standard on Open-Circuit Self-Contained Breathing Apparatus for Fire and Emergency Services*, 2002 edition.

NFPA 1991, *Standard on Vapor-Protective Ensembles for Hazardous Materials Emergencies*, 2000 edition.

NFPA 1994, *Standard on Protective Ensembles for Chemical/Biological Terrorism Incidents*, 2001 edition.

B.1.2 Other Publications.

B.1.2.1 ASTM Publication. American Society for Testing and Materials, 100 Barr Harbor Drive, West Conshohocken, PA 19428-2959.

ASTM F 1154, *Standard Practices for Qualitatively Evaluating the Comfort, Fit, Function, and Integrity of Chemical Protective Suit Ensembles*, 1996.

B.1.2.2 ISO Publications. International Organization for Standardization, 1, rue de Varembé, Case postale 56, CH-1211 Geneva 20, Switzerland.

ISO 27, *Guidelines for corrective action to be taken by a certification body in the event of misuse of its mark of conformity*, 1983.

ISO 65, *General requirements for bodies operating product certification systems*, 1996.

B.1.2.3 U.S. Government Publications. U.S. Government Printing Office, Washington, DC 20402.

Title 21, Code of Federal Regulations, Part 7, Subpart C.

Title 29, Code of Federal Regulations, 1910.120.

Title 29, Code of Federal Regulations, 1901.134.

Title 42, Code of Federal Regulations, Part 84, Subpart E.

B.1.2.4 Other Publications. *Merriam-Webster's Collegiate Dictionary*, 11th edition, Merriam-Webster, Inc., Springfield, MA 2003.

B.2 Informational References. (Reserved)

B.3 References for Extracts. (Reserved)

--`,,```-`-`,,`,,`,`,,`---

Copyright National Fire Protection Association
Provided by IHS under license with NFPA
No reproduction or networking permitted without license from IHS

Not for Resale

Index

© 2005 National Fire Protection Association. All Rights Reserved.

The copyright in this index is separate and distinct from the copyright in the document that it indexes. The licensing provisions set forth for the document are not applicable to this index. This index may not be reproduced in whole or in part by any means without the express written permission of NFPA.

-A-

Abrasion, chemical permeation resistance after
Performance requirements
Footwear 7.5.1
Gloves 7.4.1
Suit closure assemblies 7.2.8
Suit materials 7.2.1
Test ..... 8.6.7 to 8.6.9
Abrasion procedure 8.1.4
Abrasion resistance, footwear
Performance requirements 7.5.7
Test 8.20
Accessories 1.3.5, 4.3.16, 5.3.1.3, A.1.3.5
Afterflame time (definition) 3.3.1
Airflow capacity .....*see* Ventilation rate test, maximum suit
Annual verification of product compliance 4.4
Application of standard 1.3, A.1.3.2, A.1.3.5
Approved (definition) 3.2.1, A.3.2.1
Authority having jurisdiction (definition) 3.2.2, A.3.2.2

-B-

Bending resistance, ladder shanks
Performance requirements 7.5.8
Test 8.22
Biological agents 1.1.1, 1.1.2, 1.2.1, A.1.1.1, A.1.2.1
Definition 3.3.2
Biological warfare agents (definition) 3.3.3
Booties 6.1.2.5, 6.3.3, 6.3.6, 8.3.7.3
Definition 3.3.5
Boots .....*see* Outer boots; Vapor-protective footwear
Breaking strength
Performance requirements
Closure assemblies 7.2.9
Seams 7.2.7, 7.3.7
Test 8.24
Burst strength
Performance requirements
Suit materials 7.2.3
Visor 7.3.3
Test 8.10

-C-

Care
Decontamination ..... 5.2.4(6)
Definition 3.3.6
User information on ..... 5.2.4(6)
Certification/certified ..... Chap. 4; *see also* Labeled
Definition 3.3.7
Ensembles using prior standards ..... 4.1.8 to 4.1.10
Manufacturer's quality assurance program 4.5
Material and component descriptions 5.3.2.1
Modified product, evaluation of 4.2.8
Program 4.2
Recertification
Annual verification of product compliance 4.4
Modified product 4.3.17, A.4.3.17
Sample testing 4.2.6, 4.3, A.4.2.6, A.4.3.17
Certification organization ..... 4.1.3, 4.1.8 to 4.1.10, 4.2
Contract with manufacturers 4.2.5, A.4.2.5
Definition 3.3.8
Hazards involving compliant product .....*see* Hazards involving compliant product
Review of technical data package by 4.3.8
Testing program .....*see* Testing and inspection
Chemical and biological terrorism agents 1.1.1, 1.1.2, 1.2.1, A.1.1.1, A.1.2.1
Definition 3.3.9
Protective ensembles, product label compliance statements 5.1.2, 5.1.3
Chemical and biological vapor-protective ensemble .....*see* Vapor-protective ensemble with additional chemical and biological terrorism protection
Chemical, biological, and radiological terrorism incidents 1.1.2, 1.2.1, A.1.1.1, A.1.2.1
Chemical flash fire (definition) 3.3.11, A.3.3.11
Chemical flash fire protection 1.1.3, 1.2.1.2, A.1.1.3
Performance requirements 7.8, 7.9
Product label compliance statements 5.1.2, 5.1.3
Recertification ..... 4.4.3.2(5), 4.4.3.3
Tests
Flammability resistance test 8.7
Flash test, overall ensemble ..... 4.4.3.2(5), 8.27
Thermal protective performance (TPP) 8.18
Chemical penetration resistance, closure assemblies
Performance requirements 7.2.8
Test 8.25
Chemical permeation resistance
Design requirements 6.1.8, 6.3.5
Performance requirements
Chemical and biological terrorism protection 7.6.1, 7.6.2
Footwear 7.5.1
Gloves 7.4.1
Liquefied gas protection 7.7.2, 7.7.3, 7.9.5, 7.9.6
Seams 7.2.6, 7.3.6
Suit materials 7.2.1
Visors 7.3.1, 7.3.6
Test 8.6
Chemical-protective layer 6.1.7, 6.1.8, 6.2.3, 6.2.4, 6.3.4, 6.3.5
Definition 3.3.13, A.3.3.13
Chemical-protective suit .....*see* Vapor-protective suit
Chemical warfare agents ..... 1.2.1, 8.6.4.2, A.1.2.1; *see also* Chemical and biological terrorism agents
Definition 3.3.14
Protective ensembles, product label compliance statements 5.1.2, 5.1.3
Cleaning .....*see* Care
Closure assemblies .....*see* Suit closure assemblies
Closures .....*see* Suit closures
Cold temperature embrittlement, for chemical permeation resistance test 8.1.8, 8.6.12
Cold temperature performance
Performance requirements
Gloves 7.4.5
Suit materials 7.2.5
Visor 7.3.5
Test One 8.12
Test Two 8.14
Complaints and returns, investigation of 4.7
Compliance/compliant .....*see also* Labeled
Definition 3.3.15
Material and component descriptions 5.3.2.1
Product labels, compliance statements on 5.1.1.7, 5.1.1.9, 5.1.2, 5.1.3

--`,,``-`-`,,`,,`,`,,`---

Copyright National Fire Protection Association
Provided by IHS under license with NFPA
No reproduction or networking permitted without license from IHS

Not for Resale

Recertification of compliant ensembles/elements
Annual verification of product compliance 4.4
Modified product 4.3.17, A.4.3.17
2000 edition, compliance with 4.1.9, 4.1.10
Component parts (definition) 3.3.17
Components
Definition 3.3.16, A.3.3.16
Descriptions 5.3.2
Composite (definition) 3.3.18
Compression resistance .....*see* Impact and compression resistance, footwear toe
Cracking pressure (definition) 3.3.19
Cryogenic liquid A.1.1.1
Definition 3.3.20, A.3.3.20
Hazards 1.1.6
Cut resistance
Performance requirements 7.4.3, 7.5.3
Test 8.15

-D-

Decontamination ..... 5.2.4(6)
Definitions ..... Chap. 3
Design requirements ..... Chap. 6
Ensemble requirements 6.1, A.6.1.5
Footwear 6.3
Gloves 6.2
Inspection 4.3.9, 4.4.1
Donning and doffing procedures ..... 5.2.4(4)
Dry environment conditioning procedure 8.1.8

-E-

Elements (definition) ... 3.3.21, A.3.3.21; *see also* Ensemble elements
Emergency response personnel (definition) 3.3.22
Ensemble .....*see* Vapor-protective ensemble
Ensemble elements
Certification 4.1.1
Definition 3.3.24, A.3.3.24
Performance requirements
Chemical flash fire protection 7.8.1, 7.8.2
Combined chemical flash fire and liquefied gas protection 7.9
Liquefied gas protection 7.7.1
Product label compliance statements 5.1.1.9, 5.1.1.10, 5.1.3
Recertification 4.4.1
Testing 4.3.15, 4.3.16
Exhaust valves
Definition 3.3.25
Design requirements 6.1.5, 6.1.6, A.6.1.5
Inward leakage test 7.1.7, 8.26
Manufacturer description of ..... 5.3.2.2(7), 5.3.2.4(5)
Mounting strength test 7.1.5, 8.9
Explosive atmospheres 1.1.6
Definition 3.3.27
External fittings ..... 5.3.2.2(9), 6.1.10, 6.2.7, 6.3.7
Definition 3.3.26, A.3.3.26
Fitting pull out strength test 7.1.6, 8.13
Gastight integrity and 7.1.4, 8.2
Manufacturer's description ..... 5.3.2.2(8)

-F-

Faceshield .....*see* Visor
Fittings .....*see* External fittings
Flammability resistance
Performance requirements
Chemical flash fire protection 7.8.4, 7.9.4
Footwear 7.5.2
Gloves 7.4.2
Suit materials 7.2.2
Visors 7.3.2
Test 8.7
Flammable or explosive atmospheres 1.1.6
Definition 3.3.27
Flash fire, chemical .....*see* Chemical flash fire
Flexing, chemical permeation resistance after
Performance requirements
Footwear 7.5.1
Gloves 7.4.1
Suit closure assemblies 7.2.8
Suit materials 7.2.1
Test ..... 8.6.7 to 8.6.9
Flexural fatigue procedure 8.1.3, 8.1.5, 8.1.6
Follow-up programs 4.2.9, 4.4.2, A.4.2.9
Definition 3.3.28
Footwear .....*see* Outer boots; Vapor-protective footwear
Footwear soles
Performance requirements ..... 7.5.6 to 7.5.9
Tests 8.19, 8.23
Footwear uppers
Definition 3.3.30
Performance requirements ..... 7.5.1 to 7.5.4
Tests 8.6, 8.7, 8.15, 8.16

-G-

Gastight integrity
Design requirements 6.1.8, 6.3.5
Performance requirements
Ensemble 7.1.3, 7.1.4
For maximum suit ventilation rate test 7.1.3
For recertification ..... 4.4.3.2(1)
Test 8.2
For maximum suit ventilation rate test 8.5.5.1, 8.5.5.6, 8.5.6.2
Glove hand function
Performance requirements 7.4.6, A.7.4.6
Test 8.17
Gloves .....*see* Outer gloves; Vapor-protective gloves

-H-

Hazardous materials (definition) 3.3.33, A.3.3.33
Hazardous materials emergencies 1.2.1, A.1.2.1
Definition 3.3.34, A.3.3.34
Hazards involving compliant product 4.2.10, 4.6, A.4.6
Head protection ..... 5.3.2.2(11); *see also* Visor
Hood ..... 6.1.2, 6.1.7; *see also* Visor

-I-

Impact and compression resistance, footwear toe
Performance requirements 7.5.5
Test 8.21
Instructions 5.2.1
Ionizing radiation 1.1.6
Definition 3.3.35
ISO provisions 4.6.1, A.4.6.1

-L-

Labeled 5.1.1.6
Certification requirements 4.1.2, 4.1.5, 4.1.7, A.4.1.7
Definition 3.2.3
2000 edition of standard, elements labeled to 4.1.9, 4.1.10
Label/labeled 4.2.12
Ladder shanks .....*see* Shanks
Leakage tests, inward
Exhaust valves 7.1.7, 8.26
Overall ensemble 7.6.4, 8.8, A.8.8.5.15
Liquefied gas (definition) 3.3.37, A.3.3.37
Liquefied gas protection 1.2.1.1
Performance requirements 7.7, 7.9
Primary materials, testing for permeation resistance of 8.6.11
Product label compliance statements 5.1.2, 5.1.3

Copyright National Fire Protection Association
Provided by IHS under license with NFPA
No reproduction or networking permitted without license from IHS
Not for Resale

Recertification 4.4.3.3
Liquid agent contamination/vapor penetration .....*see* Chemical permeation resistance
Liquid splash-protective ensemble (definition) 3.3.38, A.3.3.38
Liquidtight integrity
Performance requirements 7.1.1
Test 8.3
Recertification ..... 4.4.3.2(2)
Listing/listed 4.1.5
Definition 3.2.4, A.3.2.4
Logbook 5.2.5, A.5.2.5

-M-

Maintenance
Definition 3.3.39
User information on ..... 5.2.4(6)
Manufacturers 4.1.4, A.4.1.4
Complaints and returns, investigation of 4.7
Contract with certification organization 4.2.5, A.4.2.5
Definition 3.3.40
Hazards involving compliant product 4.2.10
Modified product, evaluation of 4.2.8
Product label, information on 5.1.1.8
Quality assurance program 4.2.7, 4.5, A.4.2.7.1
Recall system .....*see* Recall system
Recertification requirements 4.4.2, 4.4.4
Safety alert system 4.2.7.1, 4.8, A.4.2.7.1
Technical data package provided by ...*see* Technical data package
Testing program requirements 4.2.6, 4.3.3, 4.3.4, 4.3.11, 4.3.18, A.4.2.6
User information provided by 5.2, A.5.2
Measurement, units of 1.4, A.1.4
Model (definition) 3.3.41
Modified product, evaluation of 4.2.8

-N-

Normalized breakthrough detection time ..... 8.6.5.1(3)
Definition 3.3.42

-O-

Outer boots 6.1.2.5
Definition 3.3.43
Design requirements 6.3.3, 6.3.6
Manufacturer description of ..... 5.3.2.2(10)
Product labels 5.1.1.9
Tests 8.3.7.3
Outer garment 6.1.2.3
Definition 3.3.44
Manufacturer description of .... 5.3.2.2(10), 5.3.2.4(6), 5.3.2.5(6)
Product labels 5.1.1.9
Outer gloves 6.1.2.4
Definition 3.3.45
Design requirements 6.2.5
Manufacturer description of ..... 5.3.2.2(10)
Product labels 5.1.1.9
Tests 8.3.7.2

-P-

Particulates ..... A.1.1.1; *see also* Radioactive particulates
Definition 3.3.46
Performance requirements ..... 4.3.10, 4.3.18, 4.4.1, Chap. 7
Chemical, biological, and radiological terrorism protection ... 7.6
Chemical flash fire protection 7.8
Combined chemical flash fire and liquefied gas protection 7.9
Ensemble 7.1
Footwear 7.5
Gloves 7.4, A.7.4.6
Liquefied gas protection 7.7
Suit 7.2
Visor 7.3
Pockets 6.1.9
Primary materials 6.1.7, 6.2.3, 6.3.4
Chemical flash fire protection 7.7.2, 7.7.3, 7.8.3, 7.8.4, 7.9.4, 7.9.5, 7.9.6
Definition 3.3.47
Liquefied gases, testing for permeation resistance to 8.6.11
Thermal protective performance 7.9.3
Product labels 4.1.6, 4.1.7, 5.1, A.4.1.7, A.5.1.1.9
Definition 3.3.48
Inspection ..... 4.3.5 to 4.3.7
2000 edition of standard, elements labeled to 4.1.10
Protective covers 6.1.9
Protective ensemble .....*see* Vapor-protective ensemble
Protective footwear .....*see* Vapor-protective footwear
Protective gloves .....*see* Vapor-protective gloves
Puncture propagation tear resistance
Performance requirements
Suit materials 7.2.4
Visor 7.3.4
Test 8.11
Puncture resistance
Performance requirements
Footwear 7.5.4, 7.5.6
Gloves 7.4.4
Test One 8.16
Test Two 8.19
Purpose of standard 1.2, A.1.2.1, A.1.2.2

-Q-

Quality assurance program 4.2.7, 4.5, A.4.2.7.1

-R-

Radioactive particulates 1.1.2, 1.1.6, 1.2.1, A.1.1.1, A.1.2.1
Definition 3.3.53, A.3.3.53
Recall system 4.2.7.1, 4.8, A.4.2.7.1
Definition 3.3.54
Recertification
Annual verification of product compliance 4.4
Modified product 4.3.17, A.4.3.17
References ..... Chap. 2
Respiratory equipment 1.1.7, 8.8.4.10, 8.8.4.11, 8.8.5.2, A.1.1.7
Definition 3.3.55
Room temperature conditioning procedure 8.1.2

-S-

Safety alert system 4.2.7.1, 4.8, A.4.2.7.1
Sample
Certification, testing for ..... 4.2.6, 4.3, A.4.2.6, A.4.3.17; *see also* Testing and inspection
Definition 3.3.56
Preparation procedures 8.1
Scope of standard 1.1, A.1.1.1
Seams 5.3.2.2
Breaking strength
Performance requirements 7.2.7, 7.3.7
Test 8.24
Chemical permeation resistance
Performance requirements ..... 7.2.6, 7.3.6, 7.6.1 to 7.6.3
Test 8.6
Definition 3.3.57
Self-contained breathing apparatus (SCBA) .....*see* Respiratory equipment
Shall (definition) 3.2.5
Shanks
Bending resistance
Performance requirements 7.5.8
Test 8.22
Definition 3.3.58
Should (definition) 3.2.6

Copyright National Fire Protection Association
Provided by IHS under license with NFPA
No reproduction or networking permitted without license from IHS
Not for Resale

Slip resistance, footwear sole
Performance requirements 7.5.9
Test 8.23
Specimen (definition) ..... 3.3.59; *see also* Testing and inspection
Standard (definition) 3.2.7
Storage life (definition) 3.3.60
Suit closure assemblies
Breaking strength
Performance requirements 7.2.9
Test 8.24
Chemical penetration resistance
Performance requirements 7.2.8
Test 8.25
Definition 3.3.63
Sample fatigue procedure 8.1.7
Suit closures
Definition 3.3.62
Manufacturer description of ..... 5.3.2.2(5), 5.3.2.4(4), 5.3.2.5(5)
Suit materials 5.3.2
Burst strength 7.2.3, 8.10
Chemical permeation resistance 7.2.1, 8.6
Chemical and biological terrorism protection .... 7.6.1 to 7.6.3
Liquefied gas protection 7.7.2, 7.7.3, 7.9.5, 7.9.6
Cold temperature performance 7.2.5, 8.12
Definition 3.3.64
Flammability resistance 7.2.2, 7.8.4, 7.9.4, 8.7
Manufacturer description of ..... 5.1.1.8(7), 5.3.2.2(1), 5.3.2.5
Puncture propagation tear resistance 7.2.4, 8.11
Recertification 4.4.3.3
Sample preparation procedures
Abrasion procedure 8.1.4
Dry environment conditioning procedure 8.1.9
Embrittlement procedure 8.1.8
Flexural fatigue procedure 8.1.3
Thermal protective performance 7.8.3, 7.9.3, 8.18
Suit .....*see* Vapor-protective suit

-T-

Technical data package 4.3.8, 5.1.2.1, 5.1.3.1, 5.3, A.5.3
Testing and inspection ..... 1.2.2, A.1.2.2; *see also specific tests*
Changes in design, construction, or material ..... 4.3.11 to 4.3.14, 4.3.17, A.4.3.17
Follow-up .....*see* Follow-up program
For certification 4.2.6, 4.3, A.4.2.6, A.4.3.17
For recertification
Annual verification of product compliance 4.4
Modified product 4.3.17, A.4.3.17
Methods ..... 4.3.10, Chap. 8
Reconditioned test specimens 4.3.14
Sample preparation procedures 8.1
User information on ..... 5.2.4(3)
Thermal protective performance (TPP)
Performance requirements 7.8.3, 7.9.3
Test 8.18

-U-

Units of measurement 1.4, A.1.4
User information 4.3.6, 4.3.7, 5.2, A.5.2

-V-

Vapor-protective ensemble
Definition 3.3.65, A.3.3.65
Design requirements 6.1, A.6.1.5
Materials and component descriptions 5.3.2
Performance requirements 7.1
Sizes 5.3.1.4, 6.1.4, A.5.3.1.4
Tests
Gastight integrity ..... 8.2.1 to 8.2.7
Overall ensemble flash test ..... 4.4.3.2(5), 8.27
Overall ensemble inward leakage test 7.6.4, 8.8, A.8.8.5.15
Overall suit ensemble function and integrity test ..... 4.4.3.2(3), 7.1.2, 8.4
Vapor-protective ensemble with additional chemical and biological terrorism protection
Performance requirements 7.6
Product label compliance statements 5.1.2, 5.1.3
Vapor-protective ensemble with optional chemical flash fire escape and liquefied gas protection
Definition 3.3.66
Performance requirements 7.9
Tests 8.6, 8.7, 8.27
Vapor-protective ensemble with optional chemical flash fire escape protection (definition) ..... 3.3.67, A.3.3.67; *see also* Chemical flash fire protection
Vapor-protective ensemble with optional liquefied gas protection (definition) ..... 3.3.68, A.3.3.68; *see also* Liquefied gas protection
Vapor-protective footwear .... 6.1.2; *see also* Footwear soles; Footwear uppers; Ladder shanks; Outer boots
Definition 3.3.69, A.3.3.69
Design requirements 6.1.7, 6.3
Labeling and listing 4.1.7, A.4.1.7
Manufacturer description of ..... 5.3.2.2(4), 5.3.2.4(3), 5.3.2.5(4)
Performance requirements ... 7.5, 7.6.1 to 7.6.3, 7.7.2, 7.7.3, 7.8.3, 7.8.4, 7.9.3, 7.9.4, 7.9.5, 7.9.6
Product labels ..... 5.1.1.2, 5.1.1.8(7), (10), 5.1.3
Recertification 4.4.3.3
Sample preparation procedures
Embrittlement procedure 8.1.8
Flexural fatigue procedure 8.1.6
Tests
Chemical permeation resistance 8.6
Cut resistance ..... 8.15.1 to 8.15.6, 8.15.8
Flammability resistance 8.7
Gastight integrity 8.2.1.1, 8.2.1.4, 8.2.3.1, 8.2.9
Impact and compression resistance, toe 8.21
Puncture resistance ..... 8.16.1 to 8.16.6, 8.16.8, 8.19
Thermal protective performance 8.18
Vapor-protective gloves 6.1.2
Definition 3.3.70
Design requirements 6.1.7, 6.2
Manufacturer description of ..... 5.3.2.2(3), 5.3.2.4(2), 5.3.2.5(3)
Performance requirements ... 7.4, 7.6.1 to 7.6.3, 7.7.2, 7.7.3, 7.8.3, 7.8.4, 7.9.3, 7.9.4, 7.9.5, 7.9.6, A.7.4.6
Product labels ..... 5.1.1.2, 5.1.1.8(7), (9), 5.1.3
Recertification 4.4.3.3
Sample preparation procedures
Dry environment conditioning procedure 8.1.9
Embrittlement procedure 8.1.8
Flexural fatigue procedure 8.1.5
Tests
Chemical permeation resistance 8.6
Cold temperature performance 8.12
Cut resistance ..... 8.15.1 to 8.15.7
Flammability resistance 8.7
Gastight integrity 8.2.1.1, 8.2.1.3, 8.2.3.1, 8.2.8
Glove hand function test 8.17
Puncture resistance ..... 8.16.1 to 8.16.7
Thermal protective performance 8.18
Vapor-protective suit .....*see also* Seams; Suit materials; Vapor-protective ensemble; Ventilation rate test, maximum suit
Definition 3.3.71
Ventilation rate test, maximum suit 8.5
Ensemble 7.1.3
Recertification ..... 4.4.3.2(4)
Visor material
Definition 3.3.72
Design requirements 6.1.2.1, 6.1.7
Manufacturer description of ..... 5.3.2.2(2), 5.3.2.4(1), 5.3.2.5(2)
Performance requirements 7.3
Product label ..... 5.1.1.8(8)

Copyright National Fire Protection Association
Provided by IHS under license with NFPA
No reproduction or networking permitted without license from IHS
Not for Resale

Recertification 4.4.3.3
Sample embrittlement procedure 8.1.8
Tests
Burst strength test 8.10
Chemical permeation resistance 8.6
Cold temperature performance 8.14
Flammability resistance 8.7
Puncture propagation tear resistance 8.11

-W-

Water penetration ..... *see* Liquidtight integrity

-Z-

Zippers ..... *see* Suit closures

Copyright National Fire Protection Association
Provided by IHS under license with NFPA
No reproduction or networking permitted without license from IHS
Not for Resale

Sequence of Events Leading to Publication of an NFPA Committee Document

Call goes out for proposals to amend existing document or for recommendations on new document.

▼

Committee meets to act on proposals, to develop its own proposals, and to prepare its report.

▼

Committee votes on proposals by letter ballot. If two-thirds approve, report goes forward. Lacking two-thirds approval, report returns to committee.

▼

Report — *Report on Proposals* (ROP) — is published for public review and comment.

▼

Committee meets to act on each public comment received.

▼

Committee votes on comments by letter ballot. If two-thirds approve, supplementary report goes forward. Lacking two-thirds approval, supplementary report returns to committee.

▼

Supplementary report — *Report on Comments* (ROC) — is published for public review.

▼

NFPA membership meets (Annual or Fall Meeting) and acts on committee report (ROP or ROC).

▼

Committee votes on any amendments to report approved at NFPA Annual or Fall Meeting.

▼

Appeals to Standards Council on Association action must be filed within 20 days of the NFPA Annual or Fall Meeting.

▼

Standards Council decides, based on all evidence, whether or not to issue standard or to take other action, including upholding any appeals.

Committee Membership Classifications

The following classifications apply to Technical Committee members and represent their principal interest in the activity of the committee.

M *Manufacturer:* A representative of a maker or marketer of a product, assembly, or system, or portion thereof, that is affected by the standard.

U *User:* A representative of an entity that is subject to the provisions of the standard or that voluntarily uses the standard.

I/M *Installer/Maintainer:* A representative of an entity that is in the business of installing or maintaining a product, assembly, or system affected by the standard.

L *Labor:* A labor representative or employee concerned with safety in the workplace.

R/T *Applied Research/Testing Laboratory:* A representative of an independent testing laboratory or independent applied research organization that promulgates and/or enforces standards.

E *Enforcing Authority:* A representative of an agency or an organization that promulgates and/or enforces standards.

I *Insurance:* A representative of an insurance company, broker, agent, bureau, or inspection agency.

C *Consumer:* A person who is, or represents, the ultimate purchaser of a product, system, or service affected by the standard, but who is not included in the *User* classification.

SE *Special Expert:* A person not representing any of the previous classifications, but who has a special expertise in the scope of the standard or portion thereof.

NOTES:

1. "Standard" connotes code, standard, recommended practice, or guide.
2. A representative includes an employee.
3. While these classifications will be used by the Standards Council to achieve a balance for Technical Committees, the Standards Council may determine that new classifications of members or unique interests need representation in order to foster the best possible committee deliberations on any project. In this connection, the Standards Council may make such appointments as it seems appropriate in the public interest, such as the classification of "Utilities" in the National Electrical Code Committee.
4. Representatives of subsidiaries of any group are generally considered to have the same classification as the parent organization.

Copyright National Fire Protection Association
Provided by IHS under license with NFPA
No reproduction or networking permitted without license from IHS
Not for Resale

NFPA Technical Committee Document Proposal Form

Note: All proposals must be received by 5:00 p.m. EST/EDST on the published proposal closing date.

For further information on the standards-making process, please contact Codes and Standards Administration at 617-984-7249. For technical assistance, please call NFPA at 617-770-3000.

FOR OFFICE USE ONLY
Log #: _____
Date Rec'd: _____

Please indicate in which format you wish to receive your ROP/ROC: ☐ **CD ROM** ☐ **paper** ☐ **download**
(Note: In choosing the download option you intend to view the ROP/ROC from our Website. No copy will be sent to you.)

Date 12/18/02 **Name** John B. Smith **Telephone** 617-555-1212
Company _____
Address 9 Seattle St. **City** Seattle **State** WA **Zip** 02255
Please indicate organization represented (if any) Fire Marshals Assn. of North America

1. **a) NFPA Document Title** National Fire Alarm Code
   b) NFPA No. & Edition NFPA 72, 2002 ed. **c) Section/Paragraph** 4.4.7.1.1

2. **Proposal Recommends:** *(check one)* ☐ **new text** ☐ **revised text** ☒ **deleted text**

3. **Proposal.** *(Include proposed new or revised wording, or identification of wording to be deleted.)* Note: Proposed text should be in legislative format, that is, use underscore to denote wording to be inserted (inserted wording) and strike-through to denote wording to be deleted (~~deleted wording~~). Delete exception.

4. **Statement of Problem and Substantiation for Proposal.** Note: State the problem that will be resolved by your recommendation. Give the specific reason for your proposal including copies of tests, research papers, fire experience, etc. If more than 200 words, it may be abstracted for publication. A properly installed and maintained system should be free of ground faults. The occurrence of one or more ground faults should be required to cause a "trouble" signal because it indicates a condition that could contribute to future malfunction of the system. Ground fault protection has been widely available on these systems for years and its cost is negligible. Requiring it on all systems will promote better installations, maintenance and reliability.

5. ☒ **This Proposal is Original Material.** Note: Original material is considered to be the submitter's own idea based on or as a result of his/her own experience, thought, or research and, to the best of his/her knowledge, is not copied from another source.

   ☐ **This Proposal is Not Original Material; Its Source** ***(if known)*** **is as Follows:** _____

Sample

I hereby grant the NFPA all and full rights in copyright to this proposal, and I understand that I acquire no rights in any publication of NFPA in which this proposal in this or another similar or analogous form is used.

Signature ***(Required)*** John B. Smith

PLEASE USE SEPARATE FORM FOR EACH PROPOSAL • NFPA FAX (617) 770-3500

Mail to: Secretary, Standards Council • NFPA • 1 Batterymarch Park • PO Box 9101 • Quincy, MA 02269-9101

--`,,```-`-`,,`,,`,`,,`---

Copyright National Fire Protection Association
Provided by IHS under license with NFPA
No reproduction or networking permitted without license from IHS

Not for Resale

NFPA Technical Committee Document Proposal Form

Note: All proposals must be received by 5:00 p.m. EST/EDST on the published proposal closing date.

For further information on the standards-making process, please contact Codes and Standards Administration at 617-984-7249. For technical assistance, please call NFPA at 617-770-3000.

FOR OFFICE USE ONLY
Log #: _____
Date Rec'd: _____

Please indicate in which format you wish to receive your ROP/ROC: ☐ **CD ROM** ☐ **paper** ☐ **download**
(Note: In choosing the download option you intend to view the ROP/ROC from our Website. No copy will be sent to you.)

Date _____ **Name** _____ **Telephone** _____
Company _____
Address _____ **City** _____ **State** _____ **Zip** _____
Please indicate organization represented (if any) _____

1. **a) NFPA Document Title** _____
   b) NFPA No. & Edition _____ **c) Section/Paragraph** _____

2. **Proposal Recommends:** *(check one)* ☐ **new text** ☐ **revised text** ☐ **deleted text**

3. **Proposal.** *(Include proposed new or revised wording, or identification of wording to be deleted.)* Note: Proposed text should be in legislative format, that is, use underscore to denote wording to be inserted (inserted wording) and strike-through to denote wording to be deleted (~~deleted wording~~). _____

4. **Statement of Problem and Substantiation for Proposal.** Note: State the problem that will be resolved by your recommendation. Give the specific reason for your proposal including copies of tests, research papers, fire experience, etc. If more than 200 words, it may be abstracted for publication. _____

5. ☐ **This Proposal is Original Material.** Note: Original material is considered to be the submitter's own idea based on or as a result of his/her own experience, thought, or research and, to the best of his/her knowledge, is not copied from another source.

   ☐ **This Proposal is Not Original Material; Its Source *(if known)* is as Follows:** _____

I hereby grant the NFPA all and full rights in copyright to this proposal, and I understand that I acquire no rights in any publication of NFPA in which this proposal in this or another similar or analogous form is used.

Signature *(Required)* _____

PLEASE USE SEPARATE FORM FOR EACH PROPOSAL • NFPA FAX (617) 770-3500

Mail to: Secretary, Standards Council • NFPA • 1 Batterymarch Park • PO Box 9101 • Quincy, MA 02269-9101

Copyright National Fire Protection Association
Provided by IHS under license with NFPA
No reproduction or networking permitted without license from IHS
Not for Resale