NFPA 1983

Standard on Life Safety Rope and Equipment for Emergency Services

2006 Edition

NFPA, 1 Batterymarch Park, Quincy, MA 02169-7471
An International Codes and Standards Organization

Copyright National Fire Protection Association
Provided by IHS under license with NFPA
No reproduction or networking permitted without license from IHS

Not for Resale

IMPORTANT NOTICES AND DISCLAIMERS CONCERNING NFPA DOCUMENTS

NOTICE AND DISCLAIMER OF LIABILITY CONCERNING THE USE OF NFPA DOCUMENTS

NFPA codes, standards, recommended practices, and guides, of which the document contained herein is one, are developed through a consensus standards development process approved by the American National Standards Institute. This process brings together volunteers representing varied viewpoints and interests to achieve consensus on fire and other safety issues. While the NFPA administers the process and establishes rules to promote fairness in the development of consensus, it does not independently test, evaluate, or verify the accuracy of any information or the soundness of any judgments contained in its codes and standards.

The NFPA disclaims liability for any personal injury, property or other damages of any nature whatsoever, whether special, indirect, consequential or compensatory, directly or indirectly resulting from the publication, use of, or reliance on this document. The NFPA also makes no guaranty or warranty as to the accuracy or completeness of any information published herein.

In issuing and making this document available, the NFPA is not undertaking to render professional or other services for or on behalf of any person or entity. Nor is the NFPA undertaking to perform any duty owed by any person or entity to someone else. Anyone using this document should rely on his or her own independent judgment or, as appropriate, seek the advice of a competent professional in determining the exercise of reasonable care in any given circumstances.

The NFPA has no power, nor does it undertake, to police or enforce compliance with the contents of this document. Nor does the NFPA list, certify, test or inspect products, designs, or installations for compliance with this document. Any certification or other statement of compliance with the requirements of this document shall not be attributable to the NFPA and is solely the responsibility of the certifier or maker of the statement.

--`,,```,,,,````-`-`,,`,,`,`,,`---

Copyright National Fire Protection Association
Provided by IHS under license with NFPA
No reproduction or networking permitted without license from IHS

Not for Resale

ADDITIONAL NOTICES AND DISCLAIMERS

Updating of NFPA Documents

Users of NFPA codes, standards, recommended practices, and guides should be aware that these documents may be superseded at any time by the issuance of new editions or may be amended from time to time through the issuance of Tentative Interim Amendments. An official NFPA document at any point in time consists of the current edition of the document together with any Tentative Interim Amendments and any Errata then in effect. In order to determine whether a given document is the current edition and whether it has been amended through the issuance of Tentative Interim Amendments or corrected through the issuance of Errata, consult appropriate NFPA publications such as the National Fire Codes® Subscription Service, visit the NFPA website at www.nfpa.org, or contact the NFPA at the address listed below.

Interpretations of NFPA Documents

A statement, written or oral, that is not processed in accordance with Section 6 of the Regulations Governing Committee Projects shall not be considered the official position of NFPA or any of its Committees and shall not be considered to be, nor be relied upon as, a Formal Interpretation.

Patents

The NFPA does not take any position with respect to the validity of any patent rights asserted in connection with any items which are mentioned in or are the subject of NFPA codes, standards, recommended practices, and guides, and the NFPA disclaims liability for the infringement of any patent resulting from the use of or reliance on these documents. Users of these documents are expressly advised that determination of the validity of any such patent rights, and the risk of infringement of such rights, is entirely their own responsibility.

NFPA adheres to applicable policies of the American National Standards Institute with respect to patents. For further information contact the NFPA at the address listed below.

Law and Regulations

Users of these documents should consult applicable federal, state, and local laws and regulations. NFPA does not, by the publication of its codes, standards, recommended practices, and guides, intend to urge action that is not in compliance with applicable laws, and these documents may not be construed as doing so.

Copyrights

This document is copyrighted by the NFPA. It is made available for a wide variety of both public and private uses. These include both use, by reference, in laws and regulations, and use in private self-regulation, standardization, and the promotion of safe practices and methods. By making this document available for use and adoption by public authorities and private users, the NFPA does not waive any rights in copyright to this document.

Use of NFPA documents for regulatory purposes should be accomplished through adoption by reference. The term "adoption by reference" means the citing of title, edition, and publishing information only. Any deletions, additions, and changes desired by the adopting authority should be noted separately in the adopting instrument. In order to assist NFPA in following the uses made of its documents, adopting authorities are requested to notify the NFPA (Attention: Secretary, Standards Council) in writing of such use. For technical assistance and questions concerning adoption of NFPA documents, contact NFPA at the address below.

For Further Information

All questions or other communications relating to NFPA codes, standards, recommended practices, and guides and all requests for information on NFPA procedures governing its codes and standards development process, including information on the procedures for requesting Formal Interpretations, for proposing Tentative Interim Amendments, and for proposing revisions to NFPA documents during regular revision cycles, should be sent to NFPA headquarters, addressed to the attention of the Secretary, Standards Council, NFPA, 1 Batterymarch Park, P.O. Box 9101, Quincy, MA 02269-9101.

For more information about NFPA, visit the NFPA website at www.nfpa.org.

Copyright National Fire Protection Association
Provided by IHS under license with NFPA
No reproduction or networking permitted without license from IHS
Not for Resale

Copyright © 2006, National Fire Protection Association, All Rights Reserved

NFPA 1983

Standard on

Life Safety Rope and Equipment for Emergency Services

2006 Edition

This edition of NFPA 1983, *Standard on Life Safety Rope and Equipment for Emergency Services*, was prepared by the Technical Committee on Special Operations Protective Clothing and Equipment and released by the Technical Correlating Committee on Fire and Emergency Services Protective Clothing and Equipment.

It was issued by the Standards Council on January 27, 2006, with an effective date of February 16, 2006, and supersedes all previous editions.

This edition of NFPA 1983 was approved as an American National Standard on February 16, 2006.

Origin and Development of NFPA 1983

The Technical Committee on Protective Equipment for Fire Fighters (then renamed as the Technical Committee on Fire Service Protective Clothing and Equipment) began work on this standard in 1982 in answer to requests from the fire service to establish requirements for rope used by the fire service to perform rescues. During the development of the standard, harnesses and hardware used with the rope in rescue operations were included. The work was completed in the spring of 1984 and submitted to NFPA for official adoption. The first edition was issued on June 6, 1985.

The Subcommittee on Life Safety Ropes began revision of the 1985 edition in late 1987 and turned over its proposals to the Technical Committee in December 1988. The Technical Committee completed its work on the document in April 1989, and it was submitted for the Annual Meeting 1990 cycle. The second edition was issued on July 20, 1990.

During 1993, NFPA restructured the manner in which committees were organized, and all standing subcommittees were eliminated. Within the Technical Committee on Fire Service Protective Clothing and Equipment, the former standing subcommittees were reorganized as task groups to address specific technical issues, and the Technical Committee assumed the entire responsibility for NFPA 1983.

In October 1994, just after the revisions for the third edition were completed, the Standards Council appointed the Technical Correlating Committee on Fire and Emergency Services Protective Clothing and Equipment to oversee all fire and emergency services protective clothing and equipment issues. The existing Technical Committee on Fire Service Protective Clothing and Equipment ceased to exist in May 1995, and seven new technical committees, each responsible for a different segment of the fire and emergency services protective clothing and equipment spectrum, are now in place. The future responsibility for NFPA 1983 now rests with the new Technical Committee on Special Operations Protective Clothing and Equipment, operating under the Technical Correlating Committee on Fire and Emergency Services Protective Clothing and Equipment.

The third edition of NFPA 1983 was a complete revision to the document. The document was reformatted to present the certification requirements, the product labeling and user information requirements, the design requirements, the performance requirements, and the testing requirements each in separate chapters. A different approach was taken to life safety rope and the various items used in conjunction with the rope. While the life safety rope remained as the key subject of the document, other items used in conjunction with the rope were addressed as system components.

New criteria for personal escape rope were included to cover a type of life safety rope that is carried by fire fighters/rescuers and used only for fire fighter/rescuer escape or self-rescue in critical entrapment situations where the rope would provide the only viable means of escape. There were also new criteria, in addition to the harness requirements, for three types of belts: one

Copyright National Fire Protection Association
Provided by IHS under license with NFPA
No reproduction or networking permitted without license from IHS
Not for Resale

intended for use to position a fire fighter on a ladder, a second type for escape/self-rescue using a life safety rope, and a third type for both applications. Definitions were expanded to provide better understanding of terms. The testing requirements were greatly expanded to provide the criteria with which to evaluate performance and determine pass/fail.

The third edition was acted on by the membership of the Association at the Annual Meeting in Denver, CO, on May 24, 1995, and was issued with an effective date of August 11, 1995.

The fourth edition of NFPA 1983 added a new type of rope — a throwline — a floating rope that is intended to be thrown to a person in water, or used as a tether for rescuers during water rescue incidents. New requirements for pulleys and portable anchors were also added to the fourth edition as new items of system components. The former terminology for one- and two-person load classifications was changed to a simpler load classification based on the weight that the rope or system is designed to support.

Testing methods for descent control devices were modified to provide more accurate testing for the three types of descenders. Other testing modifications were made throughout Chapter 6 to clarify testing methods and improve reproducibility of testing results.

New requirements for improved product quality assurance through manufacturer's being registered as compliant with ISO, and certification laboratory accreditation were added. Annual product evaluation, testing, and recertification were also added. All three of these new criteria were directed to raise the bar for product and certification quality and to provide a better level of safety for the end users.

Throughout the document, modifications to existing text were made in the continuing attempt to make the document clearer, less ambiguous, and easier to use by both manufacturers and the certification organizations. This process continues during every revision cycle, and the input received from document users has been very helpful in fixing many of these issues.

The fourth edition was acted on by the Association membership at the Fall Meeting in Orlando, FL, on November 15, 2000, and was issued with an effective date of February 9, 2001.

With this fifth edition of NFPA 1983, the title of the document has changed to *Standard on Life Safety Rope and Equipment for Emergency Services,* to reflect the broader audience for this type of equipment. This edition continues to refine design and performance criteria and test methods. The former approach of system components was changed to all items being independent and tested according to the type of use to which they could be subjected. Labeling requirements are specified for items that can have detachable components to better advise the user to be sure that all components are assembled properly in order to safely use the equipment.

Throughout the document, modifications to existing text were made in the continuing attempt to make the document clearer, less ambiguous, and easier to use by both manufacturers and the certification organizations. This process continues during every revision cycle and the input received from document users has been very helpful in fixing many of these issues.

The fifth edition was issued by the NFPA Standards Council on 27 January 2006, with an effective date of 16 February 2006.

--`,,```,,,,````-`-`,,`,,`,`,,`---

Copyright National Fire Protection Association
Provided by IHS under license with NFPA
No reproduction or networking permitted without license from IHS

Not for Resale

Technical Correlating Committee on Fire and Emergency Services Protective Clothing and Equipment

Richard M. Duffy, *Chair*
International Association of Fire Fighters, DC [L]
Rep. International Association of Fire Fighters

William M. Lambert, *Secretary*
Mine Safety Appliances Company, PA [M]
Rep. Compressed Gas Association

Leslie Anderson, U.S.D.A. Forest Service, MT [E]
Roger L. Barker, North Carolina State University, NC [SE]
Les Boord, U.S. Department of Health & Human Services, PA [E]
Nicholas J. Curtis, Lion Apparel, Inc., OH [M]
Robert A. Freese, Globe Manufacturing Company, NH [M]
Andy Gbur, Intertek, OH [RT]
Bill Grilliot, Morning Pride Manufacturing, LLC, OH [M]
Rep. Fire and Emergency Manufacturers and Services Association Inc.
James S. Johnson, Lawrence Livermore National Laboratory, CA [RT]
Cy Long, Texas Commission on Fire Protection, TX [E]
David G. Matthews, Fire & Industrial (P.P.E) Ltd., United Kingdom [SE]
Rep. International Standards Organization
Jim Minx, Oklahoma State Firefighters Association, OK [C]
Rep. Oklahoma State Firefighters Association
Andrew P. Perrella, E. I. DuPont Company, DE [M]
Stephen R. Sanders, Safety Equipment Institute (SEI), VA [RT]
Denise N. Statham, Southern Mills, Inc., GA [M]
Jeffrey O. Stull, International Personnel Protection, Inc., TX [SE]
David Trivette, Tyco/Scott Health & Safety, NC [M]
Rep. International Safety Equipment Association
Robert D. Tutterow, Jr., Charlotte Fire Department, NC [U]
Rep. Fire Industry Equipment Research Organization
Harry P. Winer, U.S. Department of the Navy, MA [RT]

Alternates

Jason L. Allen, Intertek, NY [RT]
(Alt. to A. Gbur)
Eric J. Beck, Mine Safety Appliances Company, PA [M]
(Alt. to W. M. Lambert)
Janice C. Bradley, International Safety Equipment Association, VA [M]
(Alt. to D. Trivette)
Steven D. Corrado, Underwriters Laboratories Inc., NC [RT]
(Voting Alt. to UL Rep.)
Patricia A. Freeman, Globe Manufacturing Company, Inc., NH [M]
(Alt. to R. A. Freese)
Patricia A. Gleason, Safety Equipment Institute (SEI), VA [RT]
(Alt. to S. R. Sanders)
Mary I. Grilliot, TFG/Morning Pride Manufacturing LLC, OH [M]
(Alt. to B. Grilliot)
William E. Haskell III, U.S. Department of Health & Human Services, MA [E]
(Alt. to L. Boord)
Kimberly M. Henry, Celanese Advanced Materials Inc., NC [M]
(Alt. to A. P. Perrella)
Steven B. Lumry, Oklahoma City Fire Department, OK [C]
(Alt. to J. Minx)
Frank P. Taylor, Lion Apparel, Inc., VA [M]
(Alt. to N. J. Curtis)

Nonvoting

Donna P. Brehm, Virginia Beach Fire Department, VA [U]
Rep. TC on Emergency Medical Services PC&E
Dean W. Cox, Fairfax County Fire & Rescue Department, VA [U]
Rep. TC on Special Operations PC&E
George M. Jackson, U.S. Department of Agriculture, MT [E]
Rep. TC on Wildland Fire Fighting PC&E
Glenn P. Jirka, Miami Township Fire & EMS Division, OH [E]
Rep. TC on Hazardous Materials PC&E
Kirk Owen, Plano Fire Department, TX [U]
Rep. TC on Structural and Proximity Fire Fighting PC&E
Ray F. Reed, Dallas Fire Rescue, TX [U]
Rep. TC on Respiratory Protection Equipment
Bruce H. Varner, Santa Rosa Fire Department, CA [E]
Rep. TC on Electronic Safety Equipment

Bruce W. Teele, NFPA Staff Liaison

This list represents the membership at the time the Committee was balloted on the final text of this edition. Since that time, changes in the membership may have occurred. A key to classifications is found at the back of the document.

NOTE: Membership on a committee shall not in and of itself constitute an endorsement of the Association or any document developed by the committee on which the member serves.

Committee Scope: This Committee shall have primary responsibility for documents on the design, performance, testing, and certification of protective clothing and protective equipment manufactured for fire and emergency services organizations and personnel, to protect against exposures encountered during emergency incident operations. This Committee shall also have the primary responsibility for documents on the selection, care, and maintenance of such protective clothing and protective equipment by fire and emergency services organizations and personnel.

Copyright National Fire Protection Association
Provided by IHS under license with NFPA
No reproduction or networking permitted without license from IHS
Not for Resale

Technical Committee on Special Operations Protective Clothing and Equipment

Dean W. Cox, *Chair*
Fairfax County Fire & Rescue Department, VA [U]

Karen Lehtonen, *Secretary*
Lion Apparel, Inc., OH [M]

Steven D. Corrado, Underwriters Laboratories Inc., NC [RT]
James A. Frank, CMC Rescue, Inc., CA [M]
Hamid M. Ghorashi, E. I. DuPont de Nemours and Co., Inc., VA [M]
Daniel Gohlke, W. L. Gore & Associates, MD [M]
William E. Haskell III, U.S. Department of Health & Human Services, MA [E]
Donald F. Hayde, Fire Department City of New York, NY [U]
Diane B. Hess, Celanese Advanced Materials Inc., NC [M]
Steve Hudson, Pigeon Mountain Industries, Inc., GA [M]
H. Dean Paderick, Special Rescue International, VA [SE]
Jack Reall, Columbus Fire Division, OH [U]
Stephen R. Sanders, Safety Equipment Institute (SEI), VA [RT]
Kelly Sisson, City of La Mesa Fire Department, CA [U]
Michael T. Stanhope, Southern Mills, Inc., GA [M]
Doug Stephenson, Walker County Emergency Services, GA [U]
Jeffrey O. Stull, International Personnel Protection, Inc., TX [SE]
Brian Wackowicz, Intertek, NY [RT]
Harry P. Winer, U.S. Department of the Navy, MA [RT]

Alternates

Jason L. Allen, Intertek, NY [RT]
(Alt. to B. Wackowicz)
Nicholas J. Curtis, Lion Apparel, Inc., OH [M]
(Alt. to K. Lehtonen)
Kimberly M. Henry, Celanese Advanced Materials Inc., NC [M]
(Alt. to D. B. Hess)
Kim Klaren, Fairfax County Fire & Rescue Department, VA [U]
(Alt. to D. W. Cox)
Loui (Clem) McCurley, Pigeon Mountain Industries, Inc., CO [M]
(Alt. to S. Hudson)
Stephen G. Rasweiler, Fire Department City of New York, NY [U]
(Alt. to D. F. Hayde)
Brennan E. Sigmon, Underwriters Laboratories Inc., NC [RT]
(Alt. to S. D. Corrado)
Denise N. Statham, Southern Mills, Inc., GA [M]
(Alt. to M. T. Stanhope)

Bruce W. Teele, NFPA Staff Liaison

This list represents the membership at the time the Committee was balloted on the final text of this edition. Since that time, changes in the membership may have occurred. A key to classifications is found at the back of the document.

NOTE: Membership on a committee shall not in and of itself constitute an endorsement of the Association or any document developed by the committee on which the member serves.

Committee Scope: This Committee shall have primary responsibility for documents on special operations protective clothing and protective equipment, except respiratory equipment, that provides hand, foot, torso, limb, head, and interface protection for fire fighters and other emergency services responders during incidents involving special operations functions including, but not limited to, structural collapse, trench rescue, confined space entry, urban search and rescue, high angle/mountain rescue, vehicular extraction, swift water or flooding rescue, contaminated water diving, and air operations.

This Committee shall also have primary responsibility for documents on station/work uniform garments that are not of themselves primary protective garments but can be combined with a primary protective garment to serve dual or multiple functions.

Additionally, this Committee shall have primary responsibility for documents on the selection, care, and maintenance of special operations protective clothing and equipment by fire and emergency services organizations and personnel.

Copyright National Fire Protection Association
Provided by IHS under license with NFPA
No reproduction or networking permitted without license from IHS
Not for Resale

Contents

Chapter 1 Administration **1983–** 6
1.1 Scope **1983–** 6
1.2 Purpose **1983–** 6
1.3 Application **1983–** 6
1.4 Units **1983–** 6

Chapter 2 Referenced Publications **1983–** 6
2.1 General **1983–** 6
2.2 NFPA Publication **1983–** 7
2.3 Other Publications **1983–** 7
2.4 References for Extracts in Mandatory Sections (Reserved) **1983–** 7

Chapter 3 Definitions **1983–** 7
3.1 General **1983–** 7
3.2 NFPA Official Definitions **1983–** 7
3.3 General Definitions **1983–** 7

Chapter 4 Certification **1983–** 9
4.1 General **1983–** 9
4.2 Certification Program **1983–**10
4.3 Inspection and Testing **1983–**11
4.4 Recertification **1983–**12
4.5 Manufacturer's Quality Assurance Program **1983–**13
4.6 Hazards Involving Compliant Product ... **1983–**13
4.7 Manufacturers' Investigation of Complaints and Returns **1983–**14
4.8 Manufacturers' Safety Alert and Product Recall Systems **1983–**14

Chapter 5 Labeling and Information **1983–**14
5.1 Product Label Requirements **1983–**14
5.2 User Information **1983–**18

Chapter 6 Design and Construction Requirements **1983–**20
6.1 Life Safety Rope **1983–**20
6.2 Escape Rope **1983–**20
6.3 Life Safety Harness **1983–**20
6.4 Belts **1983–**20
6.5 Auxiliary Equipment System Component **1983–**21
6.6 Throwline **1983–**21

Chapter 7 Performance Requirements **1983–**21
7.1 Life Safety Rope Performance Requirements **1983–**21
7.2 Escape Rope Performance Requirements **1983–**21
7.3 Throwline Performance Requirements **1983–**22
7.4 Life Safety Harness Performance Requirements **1983–**22
7.5 Belt Performance Requirements **1983–**22
7.6 Auxiliary Equipment Performance Requirements **1983–**24

Chapter 8 Test Methods **1983–**25
8.1 Sample Preparation Procedures **1983–**25
8.2 Rope Breaking and Elongation Test **1983–**25
8.3 Static Test **1983–**26
8.4 Drop Test **1983–**28
8.5 Carabiner and Snap-Link Tensile Test **1983–**29
8.6 Manner of Function Tensile Test **1983–**29
8.7 Breaking Strength Test **1983–**30
8.8 Corrosion Resistance Test **1983–**32
8.9 Floatability Test **1983–**32
8.10 Product Label Durability Test **1983–**33
8.11 Passive Brake Holding Test **1983–**33

Annex A Explanatory Material **1983–**34

Annex B Informational References **1983–**40

Index **1983–**41

--`,,```,,,,````-`-`,,`,,`,`,,`---

Copyright National Fire Protection Association
Provided by IHS under license with NFPA
No reproduction or networking permitted without license from IHS
Not for Resale

NFPA 1983

Standard on

Life Safety Rope and Equipment for Emergency Services

2006 Edition

IMPORTANT NOTE: This NFPA document is made available for use subject to important notices and legal disclaimers. These notices and disclaimers appear in all publications containing this document and may be found under the heading "Important Notices and Disclaimers Concerning NFPA Documents." They can also be obtained on request from NFPA or viewed at www.nfpa.org/disclaimers.

NOTICE: An asterisk (*) following the number or letter designating a paragraph indicates that explanatory material on the paragraph can be found in Annex A.

Information on referenced publications can be found in Chapter 2 and Annex B.

Chapter 1 Administration

1.1 Scope.

1.1.1 This standard shall specify minimum design, performance, testing, and certifications requirements for life safety rope, escape rope, water rescue throwlines, life safety harnesses, belts, and auxiliary equipment for emergency services personnel.

1.1.2 This standard shall specify requirements for *new* life safety rope, escape rope, water rescue throwlines, life safety harnesses, belts, and auxiliary equipment.

1.1.3 This standard shall not specify requirements for any accessories that could be attached to the certified product, but are not necessary for the certified product to meet the requirements of this standard.

1.1.4 This standard shall not specify requirements for any utility rope.

1.1.5 This standard shall not specify requirements for any rope or associated equipment designed for mountain rescue, cave rescue, lead climbing operations, or where expected hazards and situations dictate other performance requirements.

1.1.6* This standard shall not specify requirements for any rope or equipment for fall protection pertaining to employees of general industry or the construction and demolition industry.

1.1.7 This standard shall not be construed as addressing all of the safety concerns associated with the use of compliant life safety rope or associated equipment. It shall be the responsibility of the persons and organizations that use compliant life safety rope or associated equipment to establish safety and health practices and determine the applicability of regulatory limitations prior to use.

1.1.8 This standard shall not be construed as addressing all of the safety concerns, if any, associated with the use of this standard by testing facilities. It shall be the responsibility of the persons and organizations that use this standard to conduct testing of life safety rope to establish safety and health practices and determine the applicability of regulatory limitations prior to using this standard for any designing, manufacturing, and testing.

1.1.9 Nothing herein shall restrict any jurisdiction or manufacturer from exceeding these minimum requirements.

1.2 Purpose.

1.2.1* The purpose of this standard shall be to establish minimum levels of performance for life safety rope, escape rope, water rescue throwlines, life safety harnesses, belts, and auxiliary equipment for emergency services personnel.

1.2.2 Controlled laboratory tests used to determine compliance with the performance requirements of this standard shall not be deemed as establishing performance for all situations to which this equipment could be exposed.

1.2.3 This standard is not intended to serve as a detailed manufacturing or purchase specification, but shall be permitted to be referenced in purchase specifications as minimum requirements.

1.3 Application.

1.3.1 This standard shall apply to the design, performance, testing, and certification of new emergency services life safety rope, escape rope, water rescue throwlines, life safety harnesses, belts, and auxiliary equipment.

1.3.2 This standard shall not apply to rope or equipment for use where specific situations dictate other performance requirements such as mountain rescue, cave rescue, lead climbing operations, recreational use, and industrial fall protection for general industry and the construction and demolition industry.

1.3.3 This edition of NFPA 1983 shall not apply to any life safety rope or system components manufactured to previous editions of this standard.

1.3.4* This standard shall not apply to rope or equipment for operations where personnel are required to work above anchor points.

1.3.5 This standard shall not apply to use requirements for life safety rope and associated life safety rope equipment as these requirements are specified in NFPA 1500, *Standard on Fire Department Occupational Safety and Health Program*.

1.3.6 The requirements of this standard shall not apply to any accessories that might be attached to any life safety rope or associated life safety rope equipment.

1.4 Units.

1.4.1 In this standard, values for measurement are followed by an equivalent in parentheses, but only the first stated value shall be regarded as the requirement.

1.4.2 Equivalent values in parentheses shall not be considered as the requirement, as these values are approximate.

Chapter 2 Referenced Publications

2.1 General. The documents or portions thereof listed in this chapter are referenced within this standard and shall be considered part of the requirements of this document.

Copyright National Fire Protection Association
Provided by IHS under license with NFPA
No reproduction or networking permitted without license from IHS
Not for Resale

2.2 NFPA Publication. National Fire Protection Association, 1 Batterymarch Park, Quincy, MA 02169-7471.

NFPA 1500, *Standard on Fire Department Occupational Safety and Health Program,* 2002 edition.

2.3 Other Publications.

2.3.1 AATCC Publications. American Association of Textile Chemists and Colorists, P.O. Box 12215, Research Triangle Park, NC 27709.

AATCC Test Method 16, *Colorfastness to Light*, 2004.

AATCC 135, *Dimensional Changes in Automatic Home Laundering of Woven and Knit Fabrics*

2.3.2 ASTM Publications. American Society for Testing and Materials, 100 Barr Harbor Drive, West Conshohocken, PA 19428-2959.

ASTM B 117, *Standard Practice for Operating Salt Spray (Fog) Apparatus*, 2003.

ASTM D 4966, *Standard Test Method for Abrasion Resistance of Textile Fabrics,* (Martindale Abrasion Tester Method), 1998.

ASTM E 794, *Standard Test Method for Melting and Crystallization Temperatures by Thermal Analysis*, 2001.

ASTM F 1772, *Standard Specification for Climbing Harnesses,* 2005.

ASTM F 1956, *Standard Specification for Rescue Carabiners*, 1999.

2.3.3 Cordage Institute Publication. The Cordage Institute, 994 Old Eagle School, Wayne, PA 19087-1866.

CI 1801, *Low Stretch and Static Kernmantle Life Safety Rope*, 1998.

2.3.4 SAE International Publication. SAE International, 400 Commonwealth Dr., Warrendale, PA 15096-0001.

SAE-STD-2175A, *Castings, Classification and Inspection of,* 2003.

2.3.5 ISO Publications. International Standards Organization, 1 rue de Varembé, Case Postal 56, CH-1211 Geneve 20, Switzerland.

ISO Guide 27, *Guidelines for corrective action to be taken by a certification body in the event of misuse of its mark of conformity*, 1983.

ISO Guide 62, *General requirements for bodies operating assessment and certification/registration of quality systems*, 1996.

ISO Guide 65, *General requirements for bodies operating product certification systems*, 1996.

ISO 9001, *Quality management systems — requirements*, 2000.

ISO 17011, *General requirements for accreditation bodies accrediting conformity assessment bodies*, 2004.

ISO 17025, *General requirements for the competence of testing and calibration laboratories*, 1999.

2.3.6 UL Publication. Underwriters Laboratories Inc., 333 Pfingsten Road, Northbrook, IL 60062-2096.

ANSI/UL 913, *Standard for Intrinsically Safe Apparatus and Associated Apparatus for Use in Class I, II, and III, Division 1, Hazardous (Classified) Locations*, 2002 with revisions through December 2003.

2.3.7 Other Publication.

Merriam-Webster's Collegiate Dictionary, 11th edition, Merriam-Webster, Inc., Springfield, MA, 2003.

2.4 References for Extracts in Mandatory Sections. (Reserved)

Chapter 3 Definitions

3.1 General. The definitions contained in this chapter shall apply to the terms used in this standard. Where terms are not defined in this chapter or within another chapter, they shall be defined using their ordinarily accepted meanings within the context in which they are used. *Merriam-Webster's Collegiate Dictionary,* 11th edition, shall be the source for the ordinarily accepted meaning.

3.2 NFPA Official Definitions.

3.2.1* Approved. Acceptable to the authority having jurisdiction.

3.2.2* Authority Having Jurisdiction (AHJ). An organization, office, or individual responsible for enforcing the requirements of a code or standard, or for approving equipment, materials, an installation, or a procedure.

3.2.3 Labeled. Equipment or materials to which has been attached a label, symbol, or other identifying mark of an organization that is acceptable to the authority having jurisdiction and concerned with product evaluation, that maintains periodic inspection of production of labeled equipment or materials, and by whose labeling the manufacturer indicates compliance with appropriate standards or performance in a specified manner

3.2.4* Listed. Equipment, materials, or services included in a list published by an organization that is acceptable to the authority having jurisdiction and concerned with evaluation of products or services, that maintains periodic inspection of production of listed equipment or materials or periodic evaluation of services, and whose listing states that either the equipment, material, or service meets appropriate designated standards or has been tested and found suitable for a specified purpose.

3.2.5 Shall. Indicates a mandatory requirement.

3.2.6 Should. Indicates a recommendation or that which is advised but not required.

3.2.7 Standard. A document, the main text of which contains only mandatory provisions using the word "shall" to indicate requirements and which is in a form generally suitable for mandatory reference by another standard or code or for adoption into law. Nonmandatory provisions shall be located in an appendix or annex, footnote, or fine-print note and are not to be considered a part of the requirements of a standard.

3.3 General Definitions.

3.3.1 Adjusting Device. See 3.3.16.1.

3.3.2 Ascending Device. See 3.3.16.2.

Copyright National Fire Protection Association
Provided by IHS under license with NFPA
No reproduction or networking permitted without license from IHS
Not for Resale

3.3.3 Attachment Point.

3.3.3.1* ***Load Bearing Attachment Point.*** Point on a harness, or escape belt that is used for connection to an anchor system that will provide full support and fall arrest for the designed load.

3.3.3.2* ***Positioning Attachment Point.*** Point on a harness or belt that is used for connection to an anchor system that will support a person's weight for work at height.

3.3.4 Auxiliary Equipment. Equipment items that are load-bearing and designed to be utilized with life safety rope and harness, such as ascending devices, carabiners, descent control devices, rope grab devices, and snap-links.

3.3.5 Belt. An equipment item configured as a device that fastens around the waist only and designated as a ladder belt or an escape belt.

3.3.5.1* ***Escape Belt.*** A compliant equipment item that is intended for use by the wearer only as an emergency self-rescue device.

3.3.5.2 ***Ladder Belt.*** A compliant equipment item that is intended for use as a positioning device for a person on a ladder.

3.3.6 Block Creel Construction. See 3.3.50.1.

3.3.7 Buckle. A load-bearing connector that is an integral part of an auxiliary equipment item and used to connect two pieces of webbing.

3.3.8 Carabiner. An auxiliary equipment system item; load-bearing connector with a self-closing gate used to join other components of life safety rope.

3.3.9 Certification/Certified. A system whereby a certification organization determines that a manufacturer has demonstrated the ability to produce a product that complies with the requirements of this standard, authorizes the manufacturer to use a label on listed products that comply with the requirements of this standard, and establishes a follow-up program conducted by the certification organization as a check on the methods the manufacturer uses to determine compliance with the requirements of this standard.

3.3.10 Certification Organization. An independent, third-party organization that determines product compliance with the requirements of this standard with a labeling/listing/follow-up program.

3.3.11 Compliant. Certified as meeting or exceeding all applicable requirements of this standard.

3.3.12 Continuous Filament Fiber. See 3.3.24.1.

3.3.13 Corrosion. A condition exhibiting any signs of deterioration, including pitting or loss of metal.

3.3.14 Descent Control Device. See 3.3.16.3.

3.3.15 Design Load. See 3.3.35.1.

3.3.16 Device.

3.3.16.1 ***Adjusting Device.*** An auxiliary equipment system component; a connector device that allows adjustment to be made to a piece of equipment.

3.3.16.2* ***Ascending Device.*** A type of rope grab; auxiliary equipment; a friction or mechanical device utilized to allow ascending a fixed line.

3.3.16.3 ***Descent Control Device.*** An auxiliary equipment item; a friction or mechanical device utilized with rope to control descent.

3.3.16.3.1 ***Escape Descent Control Device.*** An auxiliary equipment system component; a friction or mechanical device utilized with escape rope to control descent.

3.3.16.4 ***Rope Grab Device.*** An auxiliary equipment device used to grasp a life safety rope for the purpose of supporting loads; includes ascending devices.

3.3.17 Diameter (Rope). See 3.3.50.2.

3.3.18 Elongation. The increase in length, expressed in a percent of the original gauge length, that occurs in a sample of new rope when tested as specified herein.

3.3.19 Escape. Immediate self-rescue of a single fire or emergency services person from a life-threatening emergency situation, generally above ground, using system components or manufactured systems designed for self-rescue escape.

3.3.20 Escape Belt. See 3.3.5.1.

3.3.21 Escape Descent Control Device. See 3.3.16.3.1.

3.3.22 Escape Rope. See 3.3.50.3.

3.3.23 Fall Factor. A measure of fall severity calculated by dividing the distance fallen by the length of rope used to arrest the fall. *(See A.1.3.4.)*

3.3.24 Fiber.

3.3.24.1 ***Continuous Filament Fiber.*** Fiber of indefinite or unmeasurable length.

3.3.24.2 ***Virgin Fiber.*** Fiber that is new and previously unused.

3.3.25 Follow-Up Program. The sampling, inspections, tests, or other measures conducted by the certification organization on a periodic basis to determine the continued compliance of labeled and listed products that are being produced by the manufacturer to the requirements of this standard.

3.3.26 General Use. One designation of equipment item or manufactured systems designed for general-use loads, light-use loads, and escape based on design loads and performance requirements.

3.3.27 Hardware. Nonfabric components of protective clothing or equipment including, but not limited to, those made of metal or plastic.

3.3.28 Harness. See 3.3.31.

3.3.29 Impact Load. See 3.3.35.2.

3.3.30 Ladder Belt. See 3.3.5.2.

3.3.31 Life Safety Harness. An equipment item; an arrangement of materials secured about the body used to support a person.

3.3.32 Life Safety Rope. See 3.3.50.4.

3.3.33 Light Use. One designation of an equipment item or manufactured systems designed for light-use loads, and escape based on design loads and performance requirements.

3.3.34 Line. See 3.3.50.5.

Copyright National Fire Protection Association
Provided by IHS under license with NFPA
No reproduction or networking permitted without license from IHS
Not for Resale

3.3.35 Load.

3.3.35.1* *Design Load.* The load for which a given piece of equipment or manufactured system was engineered for under normal static conditions.

3.3.35.2* *Impact Load.* Sudden application of a force, which causes kinetic energy and momentum to be converted into other forms of energy.

3.3.35.3* *Proof Load.* The application of force to a material as a nondestructive test to verify the performance of that material.

3.3.36 Load Bearing Attachment Point. See 3.3.3.1.

3.3.37 Load Bearing Connector. An auxiliary equipment system component; a device used to join other system components including but not limited to carabiners, rings, quick links, and snap-links.

3.3.38 Lot.

3.3.38.1 *Manufacturer's Lot.* An identifiable series of products that can be the same as or a subset of a production lot; used by the manufacturer for quality control or identification purposes.

3.3.38.2 *Production Lot.* An identifiable series of products manufactured with identical design specifications and identical materials and produced without any alterations to technique or procedure.

3.3.39 Manufactured System. Preassembled system sold as a unit by the manufacturer and tested as a complete assembly.

3.3.40 Manufacturer. The entity that directs and controls any of the following: compliant product design, compliant product manufacturing, or compliant product quality assurance; or the entity that assumes the liability for the compliant product or provides the warranty for the compliant product.

3.3.41 Manufacturer's Lot. See 3.3.38.1.

3.3.42 Melt. A response to heat by a material resulting in evidence of flowing or dripping.

3.3.43 Minimum Breaking Strength (MBS). The result of subtracting three standard deviations from the mean result of the lot being tested using the formula in 8.2.5.2.

3.3.44* Portable Anchor. A manufactured device with rigid arms, legs or both designed to support human loads.

3.3.45 Positioning Attachment Point. See 3.3.3.2.

3.3.46* Product Label. A label or marking affixed to a product by the manufacturer that provides general information, warnings, instructions for care and maintenance, and other information.

3.3.47 Production Lot. See 3.3.38.2.

3.3.48 Proof Load. See 3.3.35.3.

3.3.49 Ring. An auxiliary equipment system component; an ungated load-bearing connector.

3.3.50 Rope. A compact but flexible, torsionally balanced, continuous structure of fibers produced from strands that are twisted, plaited, or braided together and that serve primarily to support a load or transmit a force from the point of origin to the point of application.

3.3.50.1* *Block Creel Construction.* Rope constructed without knots or splices in the yarns, ply yarns, strands or braids, or rope.

3.3.50.2 *Diameter (Rope).* The length of a straight line through the center of the cross section of the rope.

3.3.50.3 *Escape Rope.* A single-purpose, emergency self-escape (self-rescue) rope; not classified as a life safety rope.

3.3.50.4 *Life Safety Rope.* Rope dedicated solely for the purpose of supporting people during rescue, fire-fighting, other emergency operations, or during training evolutions.

3.3.50.5 *Line.* Rope when in use.

3.3.50.5.1 *Throwline.* A floating rope that is intended to be thrown to a person during water rescues or as a tether for rescuers entering the water.

3.3.51 Rope Grab Device. See 3.3.16.4.

3.3.52 Sample. The element, item, component, or composite that is conditioned for subsequent testing. An amount of the material, product, or assembly to be tested that is representative of the item as a whole *(see also Specimen).*

3.3.53 Self-Destructive Action. Interaction of materials in a manner that leads to deterioration.

3.3.54 Snap-Link. An auxiliary equipment system component; a self-closing, gated, load-bearing connector.

3.3.55 Software. A type of auxiliary equipment that includes but is not limited to anchor straps, pick-off straps, and rigging slings.

3.3.56 Specimen. The conditioned element, item, component, or composite that is tested. Specimens are taken from samples *(see also Sample).*

3.3.57* Standard Deviation. A parameter that indicates the way in which a probability function is centered around its mean.

3.3.58 Throwline. See 3.3.50.5.1.

3.3.59 Virgin Fiber. See 3.3.24.2.

3.3.60 Waist. The area above the hips and below the xiphoid process.

3.3.61 Webbing. Woven material in the form of a long strip; can be of flat or tubular weave.

Chapter 4 Certification

4.1 General.

4.1.1 The process of certification for product as being compliant with NFPA 1983 shall meet the requirements of Section 4.1, General; Section 4.2, Certification Program; Section 4.3, Inspection and Testing; Section 4.4, Recertification; Section 4.5, Manufacturers' Quality Assurance Program; Section 4.6, Hazards Involving Compliant Product; Section 4.7, Manufacturers' Investigation of Complaints and Returns; and Section 4.8, Manufacturers' Safety Alert and Product Recall Systems.

4.1.2 All product labeled as being compliant with this standard shall meet or exceed all applicable requirements specified in this standard and shall be certified.

Copyright National Fire Protection Association
Provided by IHS under license with NFPA
No reproduction or networking permitted without license from IHS
Not for Resale

4.1.3 All certification shall be performed by a certification organization that meets at least the requirements specified in Section 4.2, Certification Program, and that is accredited for personal protective equipment in accordance with ISO 65, *General requirements for bodies operating product certification systems.* The accreditation shall be issued by an accreditation body operating in accordance with ISO 17011, *General requirements for accreditation bodies accrediting conformity assessment bodies.*

4.1.4 Manufacturers shall not claim compliance with portions or segments of the requirements of this standard and shall not use the NFPA name or the name or identification of this standard, NFPA 1983, in any statements about their respective products unless the products are certified as compliant to this standard.

4.1.5 All compliant products shall be labeled and listed.

4.1.6 All compliant products shall also have a product label that meets the requirements specified in Section 5.1, Product Label Requirements.

4.1.7* The certification organization's label, symbol, or identifying mark shall be part of the product label, shall be attached to the product label, or shall be immediately adjacent to the product label.

4.1.8 The certification organization shall not issue any new certifications to the 2001 edition of NFPA 1983, *Standard on Fire Service Life Safety Rope and System Components*, on or after the NFPA effective date for the 2006 edition, which is 16 February 2006.

4.1.9 The certification organization shall not permit any manufacturer to continue to label any products that are certified as compliant with the 2001 edition of NFPA 1983, *Standard on Fire Service Life Safety Rope and System Components*, after 31 August 2006.

4.1.10 The certification organization shall require manufacturers to remove all certification labels and product labels indicating compliance with the 2001 edition of NFPA 1983, *Standard on Fire Service Life Safety Rope and System Components*, from all products that are under the control of the manufacturer on 1 September 2006, and the certification organization shall verify this action is taken.

4.2 Certification Program.

4.2.1* The certification organization shall not be owned or controlled by manufacturers or vendors of the product being certified.

4.2.2 The certification organization shall be primarily engaged in certification work and shall not have a monetary interest in the product's ultimate profitability.

4.2.3 The certification organization shall be accredited for personal protective equipment in accordance with ISO 65, *General requirements for bodies operating product certification systems.* The accreditation shall be issued by an accreditation body operating in accordance with ISO 17011, *General requirements for accreditation bodies accrediting conformity assessment bodies.*

4.2.4 The certification organization shall refuse to certify products to this standard that do not comply with all applicable requirements of this standard.

4.2.5* The contractual provisions between the certification organization and the manufacturer shall specify that certification is contingent on compliance with all applicable requirements of this standard.

4.2.5.1 The certification organization shall not offer or confer any conditional, temporary, or partial certifications.

4.2.5.2 Manufacturers shall not be authorized to use any label or reference to the certification organization on products that are not compliant with all applicable requirements of this standard.

4.2.6* The certification organization shall have laboratory facilities and equipment available for conducting proper tests to determine product compliance.

4.2.6.1 The certification organization laboratory facilities shall have a program in place and functioning for calibration of all instruments, and procedures shall be in use to ensure proper control of all testing.

4.2.6.2 The certification organization laboratory facilities shall follow good practice regarding the use of laboratory manuals, form data sheets, documented calibration and calibration routines, performance verification, proficiency testing, and staff qualification and training programs.

4.2.7 The certification organization shall require the manufacturer to establish and maintain a quality assurance program that meets the requirements of Section 4.5, Manufacturer's Quality Assurance Program.

4.2.7.1* The certification organization shall require the manufacturer to have a product recall system as specified in Section 4.8, Manufacturers' Safety Alert and Product Recall Systems, as part of the manufacturer's quality assurance program.

4.2.7.2 The certification organization shall audit the manufacturer's quality assurance program to ensure that the quality assurance program provides continued product compliance with this standard.

4.2.8 The certification organization and the manufacturer shall evaluate any changes affecting the form, fit, or function of the compliant product to determine its continued certification to this standard.

4.2.9* The certification organization shall have a follow-up inspection program of the manufacturer's facilities of the compliant product with at least two random and unannounced visits per 12-month period to verify the product's continued compliance.

4.2.9.1 As part of the follow-up inspection program, the certification organization shall select sample compliant product at random from the manufacturer's production line, from the manufacturer's in-house stock, or from the open market.

4.2.9.2 Sample product shall be evaluated by the certification organization to verify the product's continued compliance in order to assure that the materials, components, and manufacturing quality assurance systems are consistent with the materials, components, and manufacturing quality assurance that were inspected and tested by the certification organization during initial certification and recertification.

4.2.9.3 The certification organization shall be permitted to conduct specific testing to verify the product's continued compliance.

4.2.9.4 For products, components, and materials where prior testing, judgment, and experience of the certification organi-

Copyright National Fire Protection Association
Provided by IHS under license with NFPA
No reproduction or networking permitted without license from IHS
Not for Resale

zation have shown results to be in jeopardy of not complying with this standard, the certification organization shall conduct more frequent testing of sample product, components, and materials acquired in accordance with 4.2.9.1 against the applicable requirements of this standard.

4.2.10 The certification organization shall have in place a series of procedures, as specified in Section 4.6, Hazards Involving Compliant Product, that address reports of situations in which a compliant product is subsequently found to be hazardous.

4.2.11 The certification organization's operating procedures shall provide a mechanism for the manufacturer to appeal decisions. The procedures shall include the presentation of information from both sides of a controversy to a designated appeals panel.

4.2.12 The certification organization shall be in a position to use legal means to protect the integrity of its name and label. The name and label shall be registered and legally defended.

4.3 Inspection and Testing

4.3.1 For both initial certification and recertification of compliant products, the certification organization shall conduct both inspection and testing as specified in this section.

4.3.2 All inspections, evaluations, conditioning, and testing for certification or for recertification shall be conducted by a certification organization's testing laboratory that is accredited in accordance with the requirements of ISO 17025, *General requirements for the competence of testing and calibration laboratories*.

4.3.2.1 The certification organization's testing laboratory's scope of accreditation to ISO 17025, *General requirements for the competence of testing and calibration laboratories*, shall encompass testing of personal protective equipment.

4.3.2.2 The accreditation of a certification organization's testing laboratory shall be issued by an accreditation body operating in accordance with ISO 17011, *General requirements for accreditation bodies accrediting conformity assessment bodies*.

4.3.3 A certification organization shall be permitted to utilize conditioning and testing results conducted by a product or component manufacturer for certification or recertification provided the manufacturer's testing laboratory meets the requirements specified in 4.3.3.1 through 4.3.3.5.

4.3.3.1 The manufacturer's testing laboratory shall be accredited in accordance with the requirements of ISO 17025, *General requirements for the competence of testing and calibration laboratories*.

4.3.3.2 The manufacturer's testing laboratory's scope of accreditation to ISO 17025, *General requirements for the competence of testing and calibration laboratories*, shall encompass testing of personal protective equipment.

4.3.3.3 The accreditation of a manufacturer's testing laboratory shall be issued by an accreditation body operating in accordance with ISO 17011, *General requirements for accreditation bodies accrediting conformity assessment bodies*.

4.3.3.4 The certification organization shall approve the manufacturer's testing laboratory.

4.3.3.5 The certification organization shall determine the level of supervision and witnessing of the conditioning and testing for certification or recertification conducted at the manufacturer's testing laboratory.

4.3.4 Sampling levels for testing and inspection shall be established by the certification organization and the manufacturer to ensure a reasonable and acceptable reliability at a reasonable and acceptable confidence level that products certified to this standard are compliant, unless such sampling levels are specified herein.

4.3.5 Inspection by the certification organization shall include a review of all product labels to ensure that all required label attachments, compliance statements, certification statements, and other product information are at least as specified for the products identified in Section 5.1, Product Label Requirements.

4.3.6 Inspection by the certification organization shall include an evaluation of any symbols and pictorial graphic representations used on product labels or in user information, as permitted by in 5.1.1.6, 5.1.2.6, 5.1.3.8, 5.1.4.8, 5.1.5.7, and 5.1.6.6, to ensure that the symbols are clearly explained in the product's user information package.

4.3.7 Inspection by the certification organization shall include a review of the user information required by Section 5.2, User Information, to ensure that the information has been developed and is available.

4.3.8 Inspection by the certification organization for determining compliance with the design requirements specified in Chapter 6 shall be performed on whole or complete products.

4.3.9 Testing to determine product compliance with the performance requirements specified in Chapter 7 shall be conducted by the certification organization in accordance with the specified testing requirements of Chapter 8.

4.3.9.1 Testing shall be performed on specimens representative of materials and components used in the actual construction of the compliant product.

4.3.9.2 The certification organization also shall be permitted to use sample materials cut from a representative product.

4.3.10 The certification organization shall accept from the manufacturer, for evaluation and testing for certification, only product or product components that are the same in every respect to the actual final product or product component.

4.3.11 The certification organization shall not allow any modifications, pretreatment, conditioning, or other such special processes of the product or any product component prior to the product's submission for evaluation and testing by the certification organization.

4.3.12 The certification organization shall not allow the substitution, repair, or modification, other than as specifically permitted herein, of any product or any product component during testing.

4.3.13 The certification organization shall not allow test specimens that have been conditioned and tested for one method to be reconditioned and tested for another test method unless specifically permitted in the test method.

4.3.14 The certification organization shall test ensemble elements with the specific ensemble(s) with which they are to be certified.

4.3.15 Any change in the design, construction, or material of a compliant product shall necessitate new inspection and testing to verify compliance to all applicable requirements of this standard that the certification organization determines can be affected by such change. This recertification shall be conducted before labeling the modified product as being compliant with this standard.

Copyright National Fire Protection Association
Provided by IHS under license with NFPA
No reproduction or networking permitted without license from IHS
Not for Resale

4.3.16 The manufacturer shall maintain all design and performance inspection and test data from the certification organization used in the certification of the manufacturer's compliant product. The manufacturer shall provide such data, upon request, to the purchaser or authority having jurisdiction.

4.4 Recertification.

4.4.1 All products that are labeled as being compliant with this standard shall undergo recertification in accordance with Table 4.4.1.

4.4.1.1 This recertification shall include inspection and evaluation to the design requirements and testing to the performance requirements as required by this standard on all manufacturers' compliant product models.

4.4.1.2 Any change that affects the compliant product performance under design or performance requirements of this standard shall constitute a different model.

4.4.1.3 For the purpose of this standard, models shall include each unique pattern, style, or design of the compliant products.

4.4.2 Samples of manufacturer's models and components for recertification shall be acquired from the manufacturer or component supplier during random and unannounced visits as part of the follow-up program specified in 4.2.9.

4.4.2.1 For recertification, the certification organization shall acquire at least one complete compliant product.

4.4.2.2 The certification organization shall also acquire a sufficient quantity of components to be tested for recertification as required by 4.4.3.

4.4.3 Compliant products and components shall be inspected, evaluated, and tested as specified in 4.4.3.1 and 4.4.3.2. Inspection, evaluation, and testing performed as part of the follow-up program shall be permitted to be used for recertification to avoid duplication.

4.4.3.1 One sample of each compliant product shall be inspected and evaluated to the design requirements specified in Chapter 6.

4.4.3.2 One sample of each compliant product and component shall be tested for overall performance as specified in Chapter 7.

Table 4.4.1 Recertification Schedule

Product	Test	Time
All component product	Corrosion testing	Initial cert only
All component product	Product label durability tests	Initial cert only
Life safety rope	Rope breaking and elongation	Every year
Escape rope	Rope breaking and elongation	Every year
Water rescue throwlines	Rope breaking	Every year
Water rescue throwlines	Floatability	Every year
Life safety harness	Static	Alternating years with drop test
Life safety harness	Drop	Alternating years with static test
Belt	Static	Alternating years with drop test
Belt	Drop	Alternating years with static test
Auxiliary equipment carabiners and snap-link	All	Biannual
Auxiliary equipment rope grab devices	All	Biannual
Auxiliary equipment system descent control devices — auto stop	Passive brake holding test	Every year
Auxiliary equipment components descent control devices — auto stop	Manner of function	Every year
Auxiliary equipment descent control descent control devices — non-auto stop	All	Biannual
Auxiliary equipment portable anchor	All	Initial cert only
Auxiliary equipment pulley	All	Biannual
Auxiliary equipment pick-off, anchor and rigging strap	Breaking strength	Every year
Auxiliary equipment manufactured systems	All	Every year

Copyright National Fire Protection Association
Provided by IHS under license with NFPA
No reproduction or networking permitted without license from IHS
Not for Resale

4.4.4 The manufacturer shall maintain all design, inspection, performance, and test data from the certification organization produced during the recertification of the manufacturer's models and components. The manufacturer shall provide such data, upon request, to the purchaser or to the authority having jurisdiction.

4.5 Manufacturer's Quality Assurance Program

4.5.1 The manufacturer shall provide and operate a quality assurance program that meets the requirements of this section and that includes a product recall system as specified in 4.2.7.1, and Section 4.8, Manufacturers' Safety Alert and Product Recall Systems.

4.5.2 The operation of the quality assurance program shall evaluate and test compliant product production to the requirements of this standard to assure production remains in compliance.

4.5.3 The manufacturer shall be registered to ISO 9001, *Quality management systems — requirements*.

4.5.3.1 Registration to the requirements of ISO 9001, *Quality management systems — requirements*, shall be conducted by a registrar that is accredited for personal protective equipment in accordance with ISO Guide 62, *General requirements for bodies operating assessment and certification/registration of quality systems*. The registrar shall affix the accreditation mark on the ISO registration certificate.

4.5.3.2 The scope of the ISO registration shall include at least the design and manufacturing systems management for the type of personal protective equipment being certified.

4.5.4* Any entity that meets the definition of manufacturer specified in Section 3.3, General Definitions, and therefore is considered the "manufacturer," but does not manufacture or assemble the compliant product, shall meet the requirements specified in this Section 4.5.

4.5.5* Where the manufacturer uses subcontractors in the construction or assembly of the compliant product, the locations and names of all subcontractor facilities shall be documented and the documentation shall be provided to the manufacturer's ISO registrar and to the certification organization.

4.6 Hazards Involving Compliant Product.

4.6.1* The certification organization shall establish procedures to be followed where situation(s) are reported in which a compliant product is subsequently found to be hazardous. These procedures shall comply with the provisions of ISO 27, *Guidelines for corrective action to be taken by a certification body in the event of misuse of its mark of conformity*, and as modified herein.

4.6.2* Where a report of a hazard involved with a compliant product is received by the certification organization, the validity of the report shall be investigated.

4.6.3 With respect to a compliant product, a hazard shall be a condition or create a situation that results in exposing life, limb, or property to an imminently dangerous or dangerous condition.

4.6.4 Where a specific hazard is identified, the determination of the appropriate action for the certification organization and the manufacturer to undertake shall take into consideration the severity of the hazard and its consequences to the safety and health of users.

4.6.5 Where it is established that a hazard is involved with a compliant product, the certification organization shall determine the scope of the hazard including products, model numbers, serial numbers, factory production facilities, production runs, and quantities involved.

4.6.6 The certification organization's investigation shall include, but not be limited to, the extent and scope of the problem as it might apply to other compliant products or compliant product components manufactured by other manufacturers or certified by other certification organizations.

4.6.7 The certification organization shall also investigate reports of a hazard where compliant product is gaining widespread use in applications not foreseen when the standard was written, such applications in turn being ones for which the product was not certified, and no specific scope of application has been provided in the standard, and no limiting scope of application was provided by the manufacturer in written material accompanying the compliant product at the point of sale.

4.6.8 The certification organization shall require the manufacturer of the compliant product, or the manufacturer of the compliant product component if applicable, to assist the certification organization in the investigation and to conduct its own investigation as specified in Section 4.7, Manufacturers' Investigation of Complaints and Returns.

4.6.9 Where the facts indicating a need for corrective action are conclusive and the certification organization's appeal procedures referenced in 4.2.11 have been followed, the certification organization shall initiate corrective action immediately, provided there is a manufacturer to be held responsible for such action.

4.6.10 Where the facts are conclusive and corrective action is indicated, but there is no manufacturer to be held responsible, such as when the manufacturer is out of business or the manufacturer is bankrupt, the certification organization shall immediately notify relevant governmental and regulatory agencies and issue a notice to the user community about the hazard.

4.6.11* Where the facts are conclusive and corrective action is indicated, the certification organization shall take one or more of the following corrective actions:

(1) Notification of parties authorized and responsible for issuing a safety alert when, in the opinion of the certification organization, such a notification is necessary to inform the users.
(2) Notification of parties authorized and responsible for issuing a product recall when, in the opinion of the certification organization, such a recall is necessary to protect the users.
(3) Removal of the mark of certification from the product.
(4) Where a hazardous condition exists and it is not practical to implement (1), (2), or (3); or the responsible parties refuse to take corrective action; the certification organization shall notify relevant governmental and regulatory agencies and issue a notice to the user community about the hazard.

4.6.12 The certification organization shall provide a report to the organization or individual identifying the reported hazardous condition and notify that organization or individual of the corrective action indicated, or that no corrective action is indicated.

Copyright National Fire Protection Association
Provided by IHS under license with NFPA
No reproduction or networking permitted without license from IHS
Not for Resale

4.6.13* Where a change to an NFPA standard(s) is felt to be necessary, the certification organization shall also provide a copy of the report and corrective actions indicated to NFPA, and shall also submit either a Public Proposal for a proposed change to the next revision of the applicable standard, or a proposed Temporary Interim Amendment (TIA) to the current edition of the applicable standard.

4.7 Manufacturers' Investigation of Complaints and Returns.

4.7.1 Manufacturers shall provide corrective action in accordance with ISO 9001, *Quality management systems — requirements*, for investigating written complaints and returned products.

4.7.2 Manufacturers' records of returns and complaints related to safety issues shall be retained for at least 5 years.

4.7.3 Where the manufacturer discovers, during the review of specific returns or complaints, that a compliant product or compliant product component can constitute a potential safety risk to end users that is possibly subject to a safety alert or product recall, the manufacturer shall immediately contact the certification organization and provide all information about its review to assist the certification organization with the investigation.

4.8 Manufacturers' Safety Alert and Product Recall Systems.

4.8.1 Manufacturers shall establish a written safety alert system and a written product recall system that describes the procedures to be used in the event that it decides, or is directed by the certification organization, to either issue a safety alert or to conduct a product recall.

4.8.2 The manufacturers' safety alert and product recall system shall provide:

(1) The establishment of a coordinator and responsibilities by the manufacturer for the handling of safety alerts and product recalls
(2) A method of notifying all dealers, distributors, purchasers, users, and NFPA about the safety alert or product recall that can be initiated within a one-week period following the manufacturer's decision to issue a safety alert or to conduct a product recall, or after the manufacturer has been directed by the certification organization to issue a safety alert or conduct a product recall
(3) Techniques for communicating accurately and understandably the nature of the safety alert or product recall and in particular the specific hazard or safety issue found to exist
(4) Procedures for removing product that is recalled and for documenting the effectiveness of the product recall
(5) A plan for either repairing, or replacing, or compensating purchasers for returned product

Chapter 5 Labeling and Information

5.1 Product Label Requirements.

5.1.1 Life Safety Rope.

5.1.1.1 Each life safety rope item shall have a product label.

5.1.1.2 Where life safety rope is an integral and nonseparable piece of a manufactured system and that manufactured system is certified as compliant with this standard, the life safety rope shall be required to have at least the continuous identification tape specified in 5.1.1.13.

5.1.1.3 The life safety rope product label shall be permitted to be a hang tag affixed to each individual life safety rope or shall be permitted to be printed on a sheet that is inserted and sealed in the packaging that immediately contains the life safety rope.

5.1.1.4 All letters shall be at least 2 mm (⅛ in.) high.

5.1.1.5 All worded portions of the required product label shall at least be in English.

5.1.1.6 Symbols and other pictorial graphic representations shall be permitted to be used to supplement worded statements on the product label(s).

5.1.1.7 The certification organization's label, symbol, or identifying mark shall be legibly printed on the product label. All letters shall be at least 2.5 mm (3⁄32 in.) high.

5.1.1.8* Each life safety rope shall have the following compliance statement on the product label.

"THIS ROPE MEETS THE LIFE SAFETY ROPE REQUIREMENTS OF NFPA 1983, STANDARD ON LIFE SAFETY ROPE AND EQUIPMENT FOR EMERGENCY SERVICES, 2006 EDITION.

CLASS: _____-USE ROPE"

5.1.1.9 The class designation of the life safety rope that is required in 5.1.1.8 to be stated on the product label shall be as determined by the certification organization in accordance with Section 7.1.

5.1.1.10 In addition to the compliance statement specified in 5.1.1.8, at least the following information shall be provided on the product label.

"MINIMUM BREAKING STRENGTH: _____ kN
DIAMETER: _____ mm

Type of fiber(s) _____"

5.1.1.11 The minimum breaking strength value of the life safety rope, which is required in 5.1.1.10 to be stated on the product label, shall be permitted to be any value greater than the actual "pass" requirement value determined by the certification testing in accordance with 7.1.1 or 7.1.2, as applicable, but shall not be greater than the calculated minimum breaking strength.

5.1.1.12 The diameter of the life safety rope, which is required in 5.1.1.10 to be stated on the product label, shall be as determined by the certification organization in accordance with 7.1.3 or 7.1.4, as applicable.

5.1.1.13* In addition to the compliance statement specified in 5.1.1.8, each life safety rope shall also be marked for its full length by insertion of a continuous identification tape(s). At least the following statement and information shall be legibly printed on the tape not less than once every meter (39 in.).

"MEETS REQUIREMENTS FOR LIFE SAFETY ROPE OF NFPA 1983"

Certification organization's label, symbol, or identifying mark

Name of manufacturer

Year and quarter of manufacture (not coded)

Copyright National Fire Protection Association
Provided by IHS under license with NFPA
No reproduction or networking permitted without license from IHS
Not for Resale

5.1.1.14 In addition to the compliance and information statements in 5.1.1.8, 5.1.1.10, and 5.1.1.13, at least the following information shall also be printed legibly on the product label(s). All letters shall be at least 2 mm (⅛ in.) high.

(1) Manufacturer's name, identification, or designation
(2) Manufacturer's address
(3) Country of manufacture
(4) Manufacturer's product identification
(5) Model, style, lot, or serial number
(6) Elongation at 1.35 kN (300 lbf)
(7) Elongation at 2.7 kN (600 lbf)
(8) Elongation at 4.4 kN (1000 lbf)

5.1.2 Escape Rope.

5.1.2.1* Each escape rope item shall have a product label.

5.1.2.2* Where escape rope is an integral and nonseparable piece of a manufactured system and that manufactured system is certified as compliant with this standard, the escape rope shall be required to have at least the continuous identification tape specified in 5.1.2.12.

5.1.2.3 The escape rope product label shall be permitted to be a hang tag affixed to each individual escape rope or shall be permitted to be printed on a sheet that is inserted and sealed in the packaging that immediately contains the escape rope.

5.1.2.4 All letters shall be at least 1.6 mm (1/16 in.) high.

5.1.2.5 All worded portions of the required product label shall at least be in English.

5.1.2.6 Symbols and other pictorial graphic representations shall be permitted to be used to supplement worded statements on the product label(s).

5.1.2.7 The certification organization's label, symbol, or identifying mark shall be legibly printed on the product label. All letters shall be at least 2.5 mm (3/32 in.) high.

5.1.2.8 Each escape rope shall have the following compliance statement on the product label.

"THIS ROPE MEETS THE ESCAPE ROPE REQUIREMENTS OF NFPA 1983, STANDARD ON LIFE SAFETY ROPE AND EQUIPMENT FOR EMERGENCY SERVICES, 2006 EDITION."

5.1.2.9* In addition to the compliance statement specified in 5.1.2.8, at least the following information shall be provided on the product label.

"MINIMUM BREAKING STRENGTH: _____ kN
DIAMETER: _____ mm
Type of fiber(s) _____"

5.1.2.10 The minimum breaking strength value of the escape rope, which is required in 5.1.2.9 to be stated on the product label, shall be permitted to be any value greater than the actual "pass" requirement value determined by the certification testing in accordance with 7.2.1, but shall not be greater than the calculated minimum breaking strength.

5.1.2.11 The diameter of the escape rope, which is required in 5.1.2.9 to be stated on the product label, shall be as determined by the certification organization in accordance with 7.2.2.

5.1.2.12* In addition to the compliance statement specified in 5.1.2.8, each escape rope shall also be marked for its full length by insertion of a continuous identification tape(s). At least the following statement and information shall be legibly printed on the tape not less than once every meter (39 in.).

"MEETS REQUIREMENTS FOR ESCAPE ROPE OF NFPA 1983"

Certification organization's label, symbol, or identifying mark

Name of manufacturer

Year and quarter of manufacture (not coded)

5.1.2.13 In addition to the compliance and information statements in 5.1.2.9, 5.1.2.10, and 5.1.2.12 at least the following information shall also be printed legibly on the product label(s). All letters shall be at least 2 mm (⅛ in.) high.

(1) Manufacturer's name, identification, or designation
(2) Manufacturer's address
(3) Country of manufacture
(4) Manufacturer's product identification
(5) Model, style, lot, or serial number
(6) Elongation at 1.35 kN (300 lb)
(7) Elongation at 2.7 kN (600 lb)
(8) Elongation at 4.4 kN (1000 lb)

5.1.3 Life Safety Harness.

5.1.3.1 Each life safety harness item shall have a product label.

5.1.3.2 Harnesses used in manufactured systems shall be required to be individually labeled.

5.1.3.3 Harness product labels shall be embossed, printed, sewn, stapled, riveted, or otherwise permanently attached to the harness.

5.1.3.4 Harness product labels shall be conspicuously located on each belt when the belt is properly assembled with all components in place.

5.1.3.5 All letters shall be at least 2 mm (⅛ in.) high.

5.1.3.6 Multiple label pieces shall be permitted in order to carry all statements and information required to be on the product label; however, all label pieces comprising the entire product label shall be located adjacent to each other.

5.1.3.7 All worded portions of the required product label shall at least be in English.

5.1.3.8 Symbols and other pictorial graphic representations shall be permitted to be used to supplement worded statements on the product label(s).

5.1.3.9 The certification organization's label, symbol, or identifying mark shall be legibly printed on the product label. All letters shall be at least 2.5 mm (3/32 in.) high.

5.1.3.10 Each life safety harness shall have the following compliance statement on the product label.

"THIS HARNESS MEETS THE LIFE SAFETY HARNESS REQUIREMENTS OF NFPA 1983, STANDARD ON LIFE SAFETY ROPE AND EQUIPMENT FOR EMERGENCY SERVICES, 2006 EDITION; CLASS _____."

Copyright National Fire Protection Association
Provided by IHS under license with NFPA
No reproduction or networking permitted without license from IHS
Not for Resale

5.1.3.11* In addition to the compliance statement specified in 5.1.3.10, at least the following information shall be provided on the product label.

(1) For Class I and II harness: **"Fits waist size _____"**
(2) For one-piece Class III harness: **"Fits waist size _____, Fits height _____"**
or: **"Fits chest size _____, Fits height _____"**
(3) For multiple-piece Class III harness: **"Fits waist size _____, Fits height _____"**
or: **"Fits chest size _____, Fits height _____**

This is one part of a multiple-piece harness and must be used in conjunction with component part number _____ in order to fully meet the criteria of Class III harness."

5.1.3.12 The class designation of the life safety harness required to be stated on the product label(s) shall be as determined by the certification organization in accordance with 6.3.1.

5.1.3.13 In addition to the compliance and information statements in 5.1.3.10, 5.1.3.11, and 5.1.3.14, at least the following information shall also be printed legibly on the product label(s). All letters shall be at least 2 mm (⅛ in.) high.

(1) Manufacturer's name, identification, or designation
(2) Manufacturer's address
(3) Country of manufacture
(4) Manufacturer's product identification
(5) Model, style, lot, or serial number

5.1.3.14 Where detachable components must be used with a life safety harness in order for the life safety harness to be compliant with this standard, at least the following statement and information shall also be printed legibly on the product label of the life safety harness. All letters shall be at least 2.5 mm (3⁄32 in.) high. The detachable component(s) shall be listed following the statement by type, identification, and how properly used.

"TO BE COMPLIANT WITH NFPA 1983, THE FOLLOWING ADDITIONAL COMPONENTS MUST BE USED IN CONJUNCTION WITH THIS LIFE SAFETY HARNESS:"
[The detachable component(s) shall be listed here.]

5.1.4 Belts.

5.1.4.1 Each belt item shall have a product label.

5.1.4.2 Belts used in manufactured systems shall be required to be individually labeled.

5.1.4.3 Belt product labels shall be embossed, printed, sewn, stapled, riveted, or otherwise permanently attached to the belt.

5.1.4.4 Belt product labels shall be conspicuously located on each belt when the belt is properly assembled with all components in place.

5.1.4.5 All letters shall be at least 2 mm (⅛ in.) high.

5.1.4.6 Multiple label pieces shall be permitted in order to carry all statements and information required to be on the product label; however, all label pieces comprising the entire product label shall be located adjacent to each other.

5.1.4.7 All worded portions of the required product label shall at least be in English.

5.1.4.8 Symbols and other pictorial graphic representations shall be permitted to be used to supplement worded statements on the product label(s).

5.1.4.9 The certification organization's label, symbol, or identifying mark shall be legibly printed on the product label. All letters shall be at least 2.5 mm (3⁄32 in.) high.

5.1.4.10 Each life safety belt shall have the following compliance statement on the product label.

"THIS BELT MEETS THE BELT REQUIREMENTS OF NFPA 1983, STANDARD ON LIFE SAFETY ROPE AND EQUIPMENT FOR EMERGENCY SERVICES, 2006 EDITION; TYPE _____."

5.1.4.11 In addition to the compliance statement specified in 5.1.4.10, at least the following information shall be provided on the product label.

"Fits waist size _____"

5.1.4.12 The type designation of belt required to be stated on the product label shall be as determined by the certification organization in accordance with 6.4.1.

5.1.4.13 In addition to the compliance and information statements in 5.1.4.10, 5.1.4.11, and 5.1.4.14, at least the following information shall also be printed legibly on the product label(s). All letters shall be at least 2 mm (⅛ in.) high.

(1) Manufacturer's name, identification, or designation
(2) Manufacturer's address
(3) Country of manufacture
(4) Manufacturer's product identification
(5) Model, style, lot, or serial number

5.1.4.14 Where detachable components must be used with the belt in order for the belt to be compliant with this standard, at least the following statement and information shall also be printed legibly on the product label of the belt. All letters shall be at least 2.5 mm (3⁄32 in.) high. The detachable component(s) shall be listed following the statement by type, identification, and how properly used.

"TO BE COMPLIANT WITH NFPA 1983, THE FOLLOWING ADDITIONAL COMPONENTS MUST BE USED IN CONJUNCTION WITH THIS BELT:"
[The detachable component(s) shall be listed here.]

5.1.5 Auxiliary Equipment Compliance and Information Statements.

5.1.5.1 Each auxiliary equipment item shall have a product label.

5.1.5.2 Each load-bearing hardware auxiliary equipment item shall have a product label stamped, engraved, or otherwise permanently marked with the portions of the product label information specified in 5.1.5.2.1 through 5.1.5.2.5.

5.1.5.2.1 Each load-bearing hardware auxiliary equipment shall have the following compliance statement: "MEETS NFPA 1983 (06 ED)"

5.1.5.2.2 Each load-bearing hardware auxiliary equipment shall display the mark or logo of the certification organization, and manufacturer's name or identifying mark.

5.1.5.2.3 Each load-bearing hardware auxiliary equipment shall display at least the minimum rated breaking strength prefaced by the letters "MBS." The minimum breaking strength value stated

Copyright National Fire Protection Association
Provided by IHS under license with NFPA
No reproduction or networking permitted without license from IHS
Not for Resale

on the product label shall be permitted to be any value greater than the actual "pass" requirement value determined by the certification testing, but shall not be greater than the calculated minimum breaking strength.

5.1.5.2.4 Each load-bearing hardware auxiliary equipment shall display a "G" for general use items, an "L" for light use items, or an "E" for escape use items. The designation "G," "L," or "E" shall be designated in accordance with 6.5.2.

5.1.5.2.5 Each auxiliary equipment ascending device, rope grab device, and descent control device shall also display the range of rope diameters with which the device is intended to be used.

5.1.5.3 The product label for the portions of the product label information not specified in 5.1.5.2.1 shall be permitted to be a hang tag affixed to each individual auxiliary equipment item or shall be permitted to be printed on a sheet that is inserted and sealed in the packaging that immediately contains the auxiliary equipment item.

5.1.5.4 All letters shall be at least 2 mm (⅛ in.) high.

5.1.5.5 Multiple label pieces shall be permitted in order to carry all statements and information required to be on the product label; however, all label pieces comprising the entire product label shall be located adjacent to each other.

5.1.5.6 All worded portions of the required product label shall at least be in English.

5.1.5.7 Symbols and other pictorial graphic representations shall be permitted to be used to supplement worded statements on the product label(s).

5.1.5.8 The certification organization's label, symbol, or identifying mark shall be legibly printed on the product label. All letters shall be at least 2.5 mm (3⁄32 in.) high.

5.1.5.9 Each auxiliary equipment item shall have the following compliance statement on the product label.

"THIS (insert name of equipment item here) MEETS THE AUXILIARY EQUIPMENT REQUIREMENTS OF NFPA 1983, STANDARD ON LIFE SAFETY ROPE AND EQUIPMENT FOR EMERGENCY SERVICES, 2006 EDITION."

5.1.5.10 In addition to the compliance statement specified in 5.1.5.9, at least the information required in 5.1.5.2.3 through 5.1.5.2.5 shall also be provided on the printed product label.

5.1.5.11 In addition to the compliance statement specified in 5.1.5.9, portable anchor auxiliary equipment devices shall include the following additional information on the product label.

"MINIMUM BREAKING STRENGTH AND RATING ARE DETERMINED AT THE CONFIGURATION OF LOWEST STRENGTH PER MANUFACTURER'S INSTRUCTIONS."

5.1.5.12 In addition to the compliance statement specified in 5.1.5.9, rigging and anchor straps shall include the following additional statement on the product label.

"MINIMUM BREAKING STRENGTH AND RATING ARE DETERMINED USING A BASKET (U) CONFIGURATION. IN ADDITION, THIS STRAP HAS A MINIMUM BREAKING STRENGTH OF:
_____ kN IN A CHOKER CONFIGURATION
_____ kN WHEN PULLED END TO END."

5.1.5.13 In addition to the compliance and information statements in 5.1.5.9, 5.1.5.10, and 5.1.5.11, at least the following information shall also be printed legibly on the product label(s). All letters shall be at least 2 mm (⅛ in.) high.

(1) Manufacturer's name, identification, or designation
(2) Manufacturer's address
(3) Country of manufacture
(4) Manufacturer's product identification
(5) Model, style, lot, or serial number

5.1.5.14 Where detachable components must be used with the auxiliary equipment item in order for the auxiliary equipment item to be compliant with this standard, at least the following statement and information shall also be printed legibly on the product label of the item. All letters shall be at least 2.5 mm (3⁄32 in.) high. The detachable component(s) shall be listed following the statement by type, identification, and how properly used.

"TO BE COMPLIANT WITH NFPA 1983, THE FOLLOWING ADDITIONAL COMPONENTS MUST BE USED IN CONJUNCTION WITH THIS (insert type of auxiliary equipment here):"
[The detachable component(s) shall be listed here.]

5.1.6 Throwlines.

5.1.6.1* Each throwline item shall have a product label.

5.1.6.2 Where a throwline is an integral and nonseparable piece of a manufactured system and that manufactured system is certified as compliant with this standard, the throwline shall be required to have at least the continuous identification tape specified in 5.1.6.12.

5.1.6.3 The throwline product label shall be permitted to be a hang tag affixed to each individual throwline or shall be permitted to be printed on a sheet that is inserted and sealed in the packaging that immediately contains the throwline.

5.1.6.4 All letters shall be at least 2 mm (⅛ in.) high.

5.1.6.5 All worded portions of the required product label shall at least be in English.

5.1.6.6 Symbols and other pictorial graphic representations shall be permitted to be used to supplement worded statements on the product label(s).

5.1.6.7 The certification organization's label, symbol, or identifying mark shall be legibly printed on the product label. All letters shall be at least 2.5 mm (3⁄32 in.) high.

5.1.6.8* Each throwline shall have the following compliance statement on the product label.

"THIS ROPE MEETS THE THROWLINE REQUIREMENTS OF NFPA 1983, STANDARD ON LIFE SAFETY ROPE AND EQUIPMENT FOR EMERGENCY SERVICES, 2006 EDITION."

5.1.6.9 In addition to the compliance statement specified in 5.1.6.8, at least the following information shall be provided on the product label.

"MINIMUM BREAKING STRENGTH: _____ kN
DIAMETER: _____ mm
Type of fiber(s) _____"

Copyright National Fire Protection Association
Provided by IHS under license with NFPA
No reproduction or networking permitted without license from IHS
Not for Resale

5.1.6.10 The minimum breaking strength value of the throwline, which is required in 5.1.6.9 to be stated on the product label, shall be permitted to be any value greater than the actual "pass" requirement value determined by the certification testing in accordance with 7.3.1, but shall not be greater than the calculated minimum breaking strength.

5.1.6.11 The diameter of the throwline, which is required in 5.1.6.9 to be stated on the product label, shall be as determined by the certification organization in accordance with 7.3.2.

5.1.6.12 In addition to the compliance statement specified in 5.1.6.9, each throwline shall also be marked for its full length by insertion of a continuous identification tape(s). At least the following statement and information shall be legibly printed on the tape not less than once every meter (39 in.).

"MEETS REQUIREMENTS FOR THROWLINE OF NFPA 1983"
Certification organization's label, symbol, or identifying mark
Name of manufacturer
Year and quarter of manufacture (not coded)

5.1.6.13 In addition to the compliance and information statements in 5.1.6.8, 5.1.6.9, and 5.1.6.12, at least the following information shall also be printed legibly on the product label(s). All letters shall be at least 2 mm (⅛ in.) high.

(1) Manufacturer's name, identification, or designation
(2) Manufacturer's address
(3) Country of manufacture
(4) Manufacturer's product identification
(5) Model, style, lot, or serial number

5.2 User Information.

5.2.1 Life Safety Rope User Information.

5.2.1.1 The manufacturer of life safety rope that is certified as being compliant with this standard shall furnish the purchaser with at least use criteria, inspection procedures, maintenance procedures, and retirement criteria for the product.

5.2.1.2 The manufacturer shall provide information for the user to consider prior to reusing life safety rope, including that the rope be considered for reuse only if all of the following conditions are met:

(1) Rope has not been visually damaged.
(2) Rope has not been exposed to heat, direct flame impingement, or abrasion.
(3) Rope has not been subjected to any impact load.
(4) Rope has not been exposed to liquids, solids, gases, mists, or vapors of any chemical or other material that can deteriorate rope.
(5) Rope passes inspection when inspected by a qualified person following the manufacturer's inspection procedures both before and after each use.

5.2.1.3 The manufacturer shall provide information for the user regarding not using the life safety rope and removing the rope from service if the rope does not meet all of the conditions in 5.2.1.2, if the rope does not pass inspection, or if there is any doubt about the safety or serviceability of the rope.

5.2.1.4 The manufacturer shall provide information for the user regarding at least the following issues:

(1) *Inspecting the rope periodically according to the manufacturer's inspection procedure
(2) Removing the rope from service and destroying it if the rope does not pass inspection or if there is any doubt about the safety or serviceability of the rope
(3) Protecting the rope from abrasion
(4) Not exposing the rope to flame or high temperature and carrying the rope where it will be protected as the rope could melt or burn and fail if exposed to flame or high temperature
(5) Keeping the product label and user instructions/information after they are removed/separated from the rope and retaining them in the permanent rope record; copying the product label and user instructions/information and keeping the copies with the rope
(6) Referring to the user instructions/information before and after each use
(7) Cautioning that, if the instructions/information are not followed, the user could suffer serious consequences

5.2.1.5 The manufacturer shall provide information for the user that additional information regarding life safety rope can be found in NFPA 1500, *Standard on Fire Department Occupational Safety and Health Program*, and NFPA 1983, *Standard on Life Safety Rope and Equipment for Emergency Services.*

5.2.1.6 The manufacturer of life safety rope that is certified as being compliant with this standard shall furnish the purchaser with a sample of suggested records to be maintained by the purchaser or user of life safety rope and a list of items that the records need to contain.

5.2.2 Escape Rope User Information.

5.2.2.1 The manufacturer of escape rope that is certified as being compliant with this standard shall furnish the purchaser with at least use criteria, inspection procedures, maintenance procedures, and retirement criteria for the product.

5.2.2.2 The manufacturer shall provide information for the user regarding at least the following issues:

(1) Using the rope only with a life safety harness or escape belt
(2) Inspecting the rope periodically according to the manufacturers' inspection procedure
(3) Removing the rope from service and destroying it if the rope does not pass inspection or if there is any doubt about the safety or serviceability of the rope
(4) Protecting the rope from abrasion
(5) Not exposing the rope to flame or high temperature and carrying the rope where it will be protected as the rope could melt or burn and fail if exposed to flame or high temperature
(6) Keeping the product label and user instructions/information after they are removed/separated from the rope for future reference
(7) Referring to the user instructions/information before and after each use
(8) Cautioning that, if the instructions/information are not followed, the user could suffer serious consequences

5.2.2.3 The manufacturer shall provide information for the user that additional information regarding escape rope can be found in NFPA 1500, *Standard on Fire Department Occupational Safety and Health Program*, and NFPA 1983, *Standard on Life Safety Rope and Equipment for Emergency Services.*

Copyright National Fire Protection Association
Provided by IHS under license with NFPA
No reproduction or networking permitted without license from IHS
Not for Resale

5.2.2.4 The manufacturer of escape rope that is certified as being compliant with this standard shall furnish the purchaser with a sample of suggested records to be maintained by the purchaser or user of escape rope and a list of items that the records need to contain.

5.2.3 Life Safety Harness User Information.

5.2.3.1 The manufacturer of life safety harness that is certified as being compliant with this standard shall furnish the purchaser with at least use criteria, inspection procedures, maintenance procedures, and retirement criteria for the product.

5.2.3.2 The manufacturer shall provide information for the user regarding at least the following issues:

(1) Inspecting the harness periodically according to the manufacturer's inspection procedure
(2) Removing the harness from service and destroying it if the harness does not pass inspection or if there is any doubt about the safety or serviceability of the harness
(3) Not exposing the harness to flame or high temperature and carrying the harness where it will be protected as the harness could melt or burn and fail if exposed to flame or high temperature
(4) Repairing the harness only in accordance with the manufacturer's instructions
(5) Keeping the user instructions/information after it is separated from the harness and retaining it in a permanent record; copying the user instructions/information and keeping the copy with the harness
(6) Referring to the user instructions/information before and after each use
(7) Cautioning that, if the instructions/information are not followed, the user could suffer serious consequences

5.2.3.3 The manufacturer shall provide information for the user that additional information regarding life safety harness can be found in NFPA 1500, *Standard on Fire Department Occupational Safety and Health Program*, and NFPA 1983, *Standard on Life Safety Rope and Equipment for Emergency Services*.

5.2.3.4 The manufacturer of life safety harness that is certified as being compliant with this standard shall furnish the purchaser with a sample of suggested records to be maintained by the purchaser or user of life safety harness and a list of items that the records need to contain.

5.2.4 Belt User Information.

5.2.4.1 The manufacturer of belts that are certified as being compliant with this standard shall furnish the purchaser with at least use criteria, inspection procedures, maintenance procedures, and retirement criteria for the product.

5.2.4.2 The manufacturer shall provide information for the user regarding at least the following issues:

(1) Inspecting the belt periodically according to the manufacturer's inspection procedure
(2) Removing the belt from service and destroying it if the belt does not pass inspection or if there is any doubt about the safety or serviceability of the belt
(3) Not exposing the belt to flame or high temperature and carrying the belt where it will be protected as the belt could melt or burn and fail if exposed to flame or high temperature
(4) Repairing the belt only in accordance with the manufacturer's instructions
(5) Keeping the user instructions/information after it is separated from the belt and retaining it in a permanent record; copying the user instructions/information and keeping the copy with the belt
(6) Referring to the user instructions/information before and after each use
(7) Cautioning that, if the instructions/information are not followed, the user could suffer serious consequences

5.2.4.3 The manufacturer shall provide information for the user that additional information regarding belts can be found in NFPA 1500, *Standard on Fire Department Occupational Safety and Health Program*, and NFPA 1983, *Standard on Life Safety Rope and Equipment for Emergency Services*.

5.2.4.4 The manufacturer of belts that are certified as being compliant with this standard shall furnish the purchaser with a sample of suggested records to be maintained by the purchaser or user of belts and a list of items that the records need to contain.

5.2.5 Auxiliary Equipment User Information.

5.2.5.1 The manufacturer of auxiliary equipment that is certified as being compliant with this standard shall furnish the purchaser with at least use criteria, inspection procedures, maintenance procedures, and retirement criteria for the product.

5.2.5.2 The manufacturer shall provide information for the user regarding at least the following issues:

(1) Inspecting the auxiliary equipment periodically according to the manufacturer's inspection procedure
(2) Removing the auxiliary equipment from service if the equipment does not pass inspection or if there is any doubt about the safety or serviceability of the equipment
(3) Maintaining the auxiliary equipment in accordance with the manufacturer's instructions where metal components are subjected to corrosion or deterioration
(4) Returning auxiliary equipment to the manufacturer or to a qualified inspection person/center if the equipment is dropped or impact-loaded
(5) Not exposing the software auxiliary equipment to flame or high temperature and carrying the equipment where it will be protected as it could melt or burn and fail if exposed to flame or high temperature
(6) Repairing the auxiliary equipment only in accordance with the manufacturer's instructions
(7) Keeping the user instructions/information after it is separated from the auxiliary equipment and retaining it in a permanent record; copying the user instructions/information and keeping the copy with the equipment
(8) Referring to the user instructions/information before and after each use
(9) Cautioning that, if the instructions/information are not followed, the user could suffer serious consequences

5.2.5.3 The manufacturer shall provide information for the user that additional information regarding auxiliary equipment can be found in NFPA 1500, *Standard on Fire Department Occupational Safety and Health Program*, and NFPA 1983, *Standard on Life Safety Rope and Equipment for Emergency Services*.

5.2.5.4 The manufacturer of auxiliary equipment that is certified as being compliant with this standard shall furnish the purchaser with a sample of suggested records to be maintained by the purchaser or user of the auxiliary equipment and a list of items that the records need to contain.

Copyright National Fire Protection Association
Provided by IHS under license with NFPA
No reproduction or networking permitted without license from IHS
Not for Resale

5.2.5.5* In addition to the requirements for auxiliary equipment, the manufacturer of portable anchors shall provide information for the user that indicates the minimum breaking strength at the highest level of adjustment or at the maximum leg extension for which the device is designed to support human loads. This information shall be provided for each attachment point, if they differ, to which human loads can be attached.

5.2.5.6 The manufacturer of manufactured systems auxiliary equipment certified as being compliant with this standard shall furnish the purchaser with a sample of suggested records to be maintained by the purchaser or user of the manufactured system auxiliary equipment.

5.2.6 Water Rescue Throwline User Information. The manufacturer of throwline that is certified as being compliant with this standard shall furnish the purchaser with at least use criteria, inspection procedures, maintenance procedures, and retirement criteria for the product.

Chapter 6 Design and Construction Requirements

6.1 Life Safety Rope.

6.1.1* Life safety rope shall be constructed of virgin fiber.

6.1.2 Life safety rope shall be of block creel construction.

6.1.3 Primary load-bearing elements of life safety rope shall be constructed of continuous filament fiber.

6.1.4 Where life safety rope is a component of equipment with electric-current carrying capabilities, the equipment including the life safety rope shall meet the requirements of ANSI/UL 913, *Standard for Intrinsically Safe Apparatus and Associated Apparatus for Use in Class I, II, and III, Division I, Hazardous (Classified) Locations,* for Class I, Division I, Groups A, B, C, and D and Class II, Division 1, Groups E, F, and G hazardous locations.

6.2 Escape Rope.

6.2.1* Escape rope shall be constructed of virgin fiber.

6.2.2 Escape rope shall be of block creel construction.

6.2.3 Primary load-bearing elements of escape rope shall be constructed of continuous filament fiber.

6.3 Life Safety Harness.

6.3.1 Life safety harness shall be designed and designated in accordance with the requirements for either Class I, Class II, or Class III.

6.3.1.1 Class I. Harness that fastens around waist and around thighs or under buttocks and designed to be used for emergency escape with a design load of 1.33 kN (300 lbf) shall be designated as Class I life safety harness.

6.3.1.2 Class II. Harness that fastens around waist and around thighs or under buttocks and designed for rescue with a design load of 2.67 kN (600 lbf) shall be designated as Class II life safety harness.

6.3.1.3 Class III.

6.3.1.3.1 Harness that fastens around waist, around thighs, or under buttocks, and over shoulders, and designed for rescue with a design load of 2.67 kN (600 lbf) shall be designated as Class III life safety harness.

6.3.1.3.2 Class III life safety harness shall be permitted to consist of one or more parts.

6.3.2* Life safety harness shall be permitted to be adjustable within a range of sizes, provided in a range of sizes, or custom-fitted for individuals.

6.3.3* Load-bearing textile materials used in the construction of life safety harness shall be made from virgin, synthetic, continuous filament fiber.

6.3.4* All webbing ends shall be secured by heat sealing or by another method that prevents unraveling.

6.3.5* All thread utilized in the construction of life safety harness shall allow for ease of inspection by the unaided eye with 20/20 vision, or vision corrected to 20/20, at a nominal distance of 305 mm (12 in.). All stitching breaks or ends shall be backtacked not less than 13 mm (½ in.).

6.3.6 Life safety harness shall have at least one load-bearing attachment point located at the front waist or sternal location of the harness.

6.3.7 Load-bearing hardware components of life safety harnesses shall be constructed of forged, machined, stamped, extruded, or cast metal.

6.3.7.1 Castings shall meet Class I, Grade A requirements of SAE-STD 2175A, *Castings, Classification and Inspection of.*

6.3.8 Where a buckle is an integral part of a Life Safety Harness, the buckle manufacturer shall provide written evidence that all load-bearing buckles have been proof-loaded to at least 11 kN (2473 lbf).

6.4 Belts.

6.4.1 Belts shall be designed and designated in accordance with one of the types in 6.4.1.1 or 6.4.1.2.

6.4.1.1 A belt that fastens only around the waist, includes at least one positioning attachment point, and is a positioning device for a person on a ladder shall be designated as a ladder belt.

6.4.1.2 A belt that fastens only around the waist, includes at least one load-bearing attachment point, and is intended for use by the wearer as an emergency self-rescue device shall be designated as an escape belt.

6.4.2* All belts shall be permitted to be adjustable within a range of sizes, provided in a range of sizes, or custom-fitted for individuals.

6.4.3* Load-bearing textile materials used in the construction of all belts shall be made from virgin, synthetic, continuous filament fiber.

6.4.4* All belts shall have webbing ends secured by heat sealing or by another method that prevents unraveling.

6.4.5* All thread utilized in the construction of all belts shall allow for ease of inspection by the unaided eye with 20/20 vision, or vision corrected to 20/20, at a nominal distance of 305 mm (12 in.). All stitching breaks or ends shall be backtacked not less than 13 mm (½ in.).

6.4.6 Ladder belts shall include a tether or device that connects the wearer to a ladder. The tether or device shall not extend greater than 610 mm (24 in.) in total length including connection hardware on each end when measured from the surface of the belt to the inside of the connector device at the greatest distance from the belt.

Copyright National Fire Protection Association
Provided by IHS under license with NFPA
No reproduction or networking permitted without license from IHS
Not for Resale

6.4.7 Load-bearing hardware components of belts shall be constructed of forged, machined, stamped, extruded, or cast metal.

6.4.7.1 Castings shall meet Class I, Grade A requirements of SAE-STD 2175A, *Castings, Classification and Inspection of.*

6.4.8 Where a buckle is an integral part of a belt, the buckle manufacturer shall provide written evidence that all load-bearing buckles have been proof-loaded to at least 11 kN (2473 lbf).

6.5 Auxiliary Equipment System Component.

6.5.1 Auxiliary equipment shall not be designed or constructed in a manner that allows self-destructive action.

6.5.2 Auxiliary equipment, other than rope grab devices as specified in 6.5.2.4, shall be designated by the manufacturer for its intended use and design load as either escape, light use, or general use.

6.5.2.1 The designation of escape shall apply to auxiliary equipment intended for the sole use of the rescuer for personal escape or self-rescue.

6.5.2.2* The designation of light use shall apply to auxiliary equipment intended for a design load of 1.33 kN (300 lbf).

6.5.2.3* The designation of general use shall apply to auxiliary equipment intended for design loads of 2.67 kN (600 lbf).

6.5.2.4 Rope grab devices shall be designated as being designed for either light use or for general use.

6.5.3 Load-bearing hardware auxiliary equipment shall be constructed of forged, machined, stamped, extruded, or cast metal.

6.5.3.1 Castings shall meet Class I, Grade A requirements of SAE-STD 2175A, *Castings, Classification and Inspection of.*

6.5.4 Where a buckle is an integral part of an auxiliary equipment system component, the buckle manufacturer shall provide written evidence that all load-bearing buckles have been proof-loaded to at least 11 kN (2473 lbf).

6.5.5* Snap-link and carabiner gates shall be self-closing and of a locking design.

6.5.6 Webbing used to construct auxiliary equipment software shall be constructed of virgin, synthetic, continuous filament fiber.

6.5.7* All webbing ends used to construct auxiliary equipment software shall be secured by heat sealing or by another method that prevents unraveling.

6.5.8* All thread utilized to construct auxiliary equipment software shall allow for ease of inspection by the unaided eye with 20/20 vision, or vision corrected to 20/20, at a nominal distance of 305 mm (12 in.). All stitching breaks or ends shall be backtacked not less than 13 mm (½ in.).

6.6 Throwline.

6.6.1* Throwline shall be constructed of virgin fiber.

6.6.2 Throwline shall be of block creel construction.

6.6.3 Throwline load-bearing elements shall be constructed of continuous filament fiber.

Chapter 7 Performance Requirements

7.1* Life Safety Rope Performance Requirements.

7.1.1* Light-use life safety rope shall be tested for breaking strength and elongation as specified in Section 8.2, Rope Breaking and Elongation Test, and shall have a minimum breaking strength of not less than 20 kN (4496 lbf), the minimum elongation shall not be less than 1 percent at 10 percent of breaking strength, and the maximum elongation shall not be more than 10 percent at 10 percent of breaking strength.

7.1.2* General-use life safety rope shall be tested for breaking strength and elongation as specified in Section 8.2, Rope Breaking and Elongation Test, and shall have a minimum breaking strength of not less than 40 kN (8992 lbf), the minimum elongation shall not be less than 1 percent at 10 percent of breaking strength, and the maximum elongation shall not be more than 10 percent at 10 percent of breaking strength.

7.1.3* Light-use life safety rope shall be tested for size as specified in Section 9.1 of Cordage Institute Standard CI 1801, *Low Stretch and Static Kernmantle Life Safety Rope*, and shall have a diameter of 9.5 mm (⅜ in.) or greater but less than 12.5 mm (½ in.). For the purpose of reporting, the calculated diameter of all new life safety rope shall be rounded to the nearest 0.5 mm (1/64 in.).

7.1.4* General-use life safety rope shall be tested for size as specified in Section 9.1 of Cordage Institute Standard CI 1801, *Low Stretch and Static Kernmantle Life Safety Rope,* and shall have a diameter of 11 mm (7/16 in.) or greater but less than or equal to 16 mm (⅝ in.). For the purpose of reporting, the calculated diameter of all new life safety rope shall be rounded to the nearest 0.5 mm (1/64 in.).

7.1.5* Fiber utilized for all life safety rope shall be tested for melting as specified in ASTM E 794, *Standard Test Method for Melting and Crystallization Temperatures by Thermal Analysis*, and shall have a melting point of not less than 204°C (400°F).

7.1.6 Life safety rope product labels and identification tape shall be tested for legibility as specified in Section 8.10, Product Label Durability Test, and shall be legible, shall remain in place, and shall not be torn or otherwise damaged.

7.2* Escape Rope Performance Requirements.

7.2.1* Escape rope shall be tested for breaking strength and elongation as specified in Section 8.2, Rope Breaking and Elongation Test, and shall have a minimum breaking strength of not less than 13.5 kN (3034 lbf), the minimum elongation shall not be less than 1 percent at 10 percent of breaking strength, and the maximum elongation shall not be more than 10 percent at 10 percent of breaking strength.

7.2.2* Escape rope shall be tested for size as specified in Section 9.1 of Cordage Institute Standard CI 1801, *Low Stretch and Static Kernmantle Life Safety Rope,* and shall have a diameter of 7.5 mm (19/64 in.) or greater, but less than 9.5 mm (⅜ in.). For the purpose of reporting, the calculated diameter of all new escape rope shall be rounded to the nearest 0.5 mm (1/64 in.).

7.2.3* Fiber utilized for all escape rope shall be tested for melting in accordance with ASTM E 794, *Standard Test Method for Melting and Crystallization Temperatures by Thermal Analysis,* and shall have a melting point of not less than 204°C (400°F).

Copyright National Fire Protection Association
Provided by IHS under license with NFPA
No reproduction or networking permitted without license from IHS
Not for Resale

7.2.4 Escape rope product labels and identification tape shall be tested for legibility as specified in Section 8.10, Product Label Durability Test, and shall be legible, shall remain in place and shall not be torn or otherwise damaged.

7.3 Throwline Performance Requirements.

7.3.1 Throwline shall be tested for minimum breaking strength as specified in Section 8.2, Rope Breaking and Elongation Test, and shall have a minimum breaking strength of not less than 13 kN (2923 lbf).

7.3.2* Throwline shall be tested for size as specified in Section 9.1 of Cordage Institute Standard CI 1801, *Low Stretch and Static Kernmantle Life Safety Rope*, and shall have a diameter of 7 mm (19⁄64 in.) or greater, but less than 9.5 mm (3⁄8 in.). For the purpose of reporting, the calculated diameter of all new life safety rope shall be rounded to the nearest 0.5 mm (1⁄64 in.).

7.3.3 Throwline shall be tested for the ability to float as specified in Section 8.9, Floatability Test, and shall float.

7.3.4 Throwline product labels and identification tape shall be tested for legibility as specified in Section 8.10, Product Label Durability Test, and shall remain in place and shall be legible.

7.4 Life Safety Harness Performance Requirements.

7.4.1 Class I Life Safety Harness.

7.4.1.1 Class I life safety harness shall be tested for strength as specified in Section 8.3, Static Test, and shall not release from the test torso, the harness buckles and adjusting devices shall not slip more than 25 mm (1 in.), and the harness shall show no visible signs of damage that would affect its function.

7.4.1.2 Class I life safety harness shall be tested for drop as specified in Section 8.4, Drop Test, and the test torso shall not contact the ground during any of the test drops.

7.4.1.3 Where Class I life safety harness include side D-rings and attachment points designated by the manufacturer as positioning attachments only, these attachments shall be tested for strength as specified in Section 8.3, Static Test, and shall show no visible signs of damage that would affect its function.

7.4.2 Class II Life Safety Harness.

7.4.2.1 Class II life safety harness shall be tested for strength as specified in Section 8.3, Static Test, and shall not release from the test torso, the harness buckles and adjusting devices shall not slip more than 25 mm (1 in.), and the harness shall show no visible signs of damage that would affect its function.

7.4.2.2 Class II life safety harness shall be tested for drop as specified in Section 8.4, Drop Test, and the test torso shall not contact the ground during any of the test drops.

7.4.2.3 Where Class II life safety harness include side D-rings and attachment points designated by the manufacturer as positioning attachments only, these attachments shall be tested for strength as specified in Section 8.3, Static Test, and shall show no visible signs of damage that would affect its function.

7.4.3 Class III Life Safety Harness.

7.4.3.1 Class III life safety harness shall be tested for strength as specified in Section 8.3, Static Test, and shall not release from the test torso, the harness buckles and adjusting devices shall not slip more than 25 mm (1 in.), and the harness shall show no visible signs of damage that would affect its function.

7.4.3.2 Class III life safety harness shall be tested for drop as specified in Section 8.4, Drop Test, and the test torso shall not contact the ground during any of the test drops.

7.4.3.3 Where Class III life safety harness include side D-rings and attachment points designated by the manufacturer as positioning attachments only, these attachments shall be tested for strength as specified in Section 8.3, Static Test, and shall show no visible signs of damage that would affect its function.

7.4.4 All life safety harness product labels shall be tested for durability as specified in Section 8.10, Product Label Durability Test, and shall be legible, and shall not be torn or otherwise damaged.

7.4.5 All metal hardware and hardware that includes metal parts shall be tested for corrosion resistance as specified in Section 8.8, Corrosion Resistance Test, and metals inherently resistant to corrosion including but not limited to stainless steel, brass, copper, aluminum, and zinc shall show no more than light surface–type corrosion or oxidation. Ferrous metals shall show no corrosion of the base metal. All hardware shall remain functional as specified in the manufacturers' operating instructions.

7.4.6* All fiber and thread used in load-bearing materials and thread used in the construction of Class I, Class II, and Class III life safety harness shall be tested for melting as specified in ASTM E 794, *Standard Test Method for Melting and Crystallization Temperatures by Thermal Analysis,* and shall have a melting point of not less than 204°C (400°F).

7.5 Belt Performance Requirements.

7.5.1 Ladder belts shall be tested for strength as specified in Section 8.3, Static Test, and shall not release from the test torso, shall not slip more than 25 mm (1 in.), and shall show no visible signs of damage that would affect its function.

7.5.1.1 Where ladder belts include side D-rings and attachment points designated by the manufacturer as positioning attachments only, these attachments shall be tested for strength as specified in Section 8.3, Static Test, and shall show no visible signs of damage that would affect its function.

7.5.2 Escape belts shall be tested for strength as specified in Section 8.3, Static Test, and shall not release from the test torso, shall not slip more than 25 mm (1 in.), and shall show no visible signs of damage that would affect its function.

7.5.2.1 Where escape belts include side D-rings and attachment points designated by the manufacturer as positioning attachments only, these attachments shall be tested for strength as specified in Section 8.3, Static Test, and shall show no visible signs of damage that would affect its function.

7.5.3 Escape belts shall be tested for drop as specified in Section 8.4, Drop Test, and the test torso shall not contact the ground during any of the test drops.

7.5.4 All belt product labels shall be tested for durability as specified in Section 8.10, Product Label Durability Test, and shall be legible, and shall not be torn or otherwise damaged.

7.5.5 Metal hardware and hardware that includes metal parts shall be tested for corrosion resistance as specified in Section 8.8, Corrosion Resistance Test, and metals inherently resistant to corrosion including but not limited to stainless steel, brass, copper, aluminum, and zinc shall show no more than light surface–type corrosion or oxidation. Ferrous metals shall show no corrosion of

Copyright National Fire Protection Association
Provided by IHS under license with NFPA
No reproduction or networking permitted without license from IHS
Not for Resale

the base metal. All hardware shall remain functional as specified in the manufacturers' operating instructions.

7.5.6 Manufactured Systems Performance Requirements.

7.5.6.1 Light-use manufactured systems shall be tested for deformation as specified in Section 8.7, Breaking Strength Test, Procedure A, and shall have no permanent damage to the system or its component parts or visible deformation to the general shape of the system or components.

7.5.6.2 Light-use manufactured systems shall be tested for strength as specified in Section 8.7, Breaking Strength Test, Procedure B, and shall have a minimum tensile strength of at least 22 kN (4946 lbf) without failure.

7.5.6.3 General-use manufactured systems shall be tested for deformation as specified in Section 8.7, Breaking Strength Test, Procedure A, and shall have no permanent damage to the system or its component parts or visible deformation to the general shape of the system or components.

7.5.6.4 General-use manufactured systems shall be tested for strength as specified in Section 8.7, Breaking Strength Test, Procedure B, and shall have a minimum tensile strength of at least 36 kN (8093 lbf) without failure.

7.5.6.5 Permanently attached manufactured system product labels shall be tested for legibility as specified in Section 8.10, Product Label Durability Test, and shall be legible, shall remain in place, and shall not be torn or otherwise damaged.

7.5.6.6 All metal hardware and hardware that includes metal parts shall be tested for corrosion resistance as specified in Section 8.8, Corrosion Resistance Test, and metals inherently resistant to corrosion including but not limited to stainless steel, brass, copper, aluminum, and zinc shall show no more than light surface–type corrosion or oxidation. Ferrous metals shall show no corrosion of the base metal. All hardware shall remain functional as specified in the manufacturers' operating instructions.

7.5.6.7 Where a manufactured system contains a life safety harness subcomponent, the life safety harness shall be individually tested, labeled, and certified to meet the appropriate requirements specified in Section 7.3, Throwline Performance Requirements, in addition to the manufactured system requirements of 7.5.6.1 through 7.5.6.6 as applicable.

7.5.6.8 Escape manufactured systems shall be tested for strength as specified in Section 8.7, Breaking Strength Test, Procedure B, and shall have a minimum tensile strength of at least 13.5 kN (3034 lbf) without failure.

7.5.6.9 Where a manufactured system contains an ascending device, rope grab device, or descent control device, the system shall be tested for deformation as specified in Section 8.6, Manner of Function Tensile Test, Procedure A, and shall not show any permanent damage or visible deformation to the general shape of the device and shall not show any damage to the rope.

7.5.7 Pick-off, Rigging, and Anchor Strap Performance Requirements.

7.5.7.1 Light-use rigging and anchor straps shall be tested for breaking strength as specified in Section 8.7, Breaking Strength Test, and shall have a minimum breaking strength of at least 32 kN (7194 lbf) without failure.

7.5.7.1.1 Where the strap includes an adjustment device the adjustment device shall not slip more than 50 mm (2 in.).

7.5.7.2 General-use rigging and anchor straps shall be tested for breaking strength as specified in Section 8.7, Breaking Strength Test, and shall have a minimum breaking strength of at least 45 kN (10,120 lbf) without failure.

7.5.7.2.1 Where the strap includes an adjustment device the adjustment device shall not slip more than 50 mm (2 in.).

7.5.7.3 Light-use pick-off straps shall be tested for breaking strength as specified in Section 8.7, Breaking Strength Test, and shall have a minimum breaking strength of at least 20 kN (4500 lbf) without failure.

7.5.7.3.1 Where the strap includes an adjustment device the adjustment device shall not slip more than 50 mm (2 in.).

7.5.7.4 General-use pick-off straps shall be tested for breaking strength as specified Section 8.7, Breaking Strength Test, and shall have a minimum breaking strength of at least 27 kN (6070 lbf) without failure.

7.5.7.4.1 Where the strap includes an adjustment device the adjustment device shall not slip more than 50 mm (2 in.).

7.5.7.5 Permanently attached pick-off, rigging, and anchor strap product labels shall be tested for legibility as specified in Section 8.10, Product Label Durability Test, shall be legible, and shall not be torn or otherwise damaged.

7.5.7.6 All metal hardware and hardware that includes metal parts shall be tested for corrosion resistance as specified in Section 8.8, Corrosion Resistance Test, and metals inherently resistant to corrosion including but not limited to stainless steel, brass, copper, aluminum, and zinc shall show no more than light surface–type corrosion or oxidation. Ferrous metals shall show no corrosion of the base metal. All hardware shall remain functional as specified in the manufacturers' operating instructions.

7.5.7.7* All fiber and thread used for pick-off, rigging, and anchor straps shall be tested for melting as specified in ASTM E 794, *Standard Test Method for Melting and Crystallization Temperatures by Thermal Analysis,* and shall have a melting point of not less than 204°C (400°F).

7.5.8 Other Auxiliary Equipment Performance Requirements.

7.5.8.1 Other light-use auxiliary equipment shall be tested for strength as specified in Section 8.7, Breaking Strength Test, Procedure B, and shall have a minimum tensile strength of at least 22 kN (4946 lbf) without failure.

7.5.8.2 Other general-use auxiliary equipment shall be tested for strength as specified in Section 8.7, Breaking Strength Test, Procedure B, and shall have a minimum tensile strength of at least 22 kN (4946 lbf) without failure.

7.5.8.3 All metal hardware and hardware that includes metal parts shall be tested for corrosion resistance as specified in Section 8.8, Corrosion Resistance Test, and metals inherently resistant to corrosion including but not limited to stainless steel, brass, copper, aluminum, and zinc shall show no more than light surface–type corrosion or oxidation. Ferrous metals shall show no corrosion of the base metal. All hardware shall remain functional as specified in the manufacturers' operating instructions.

Copyright National Fire Protection Association
Provided by IHS under license with NFPA
No reproduction or networking permitted without license from IHS
Not for Resale

7.5.8.4* All fiber and thread utilized in the construction of all auxiliary equipment systems and system components shall be tested for melting as specified in ASTM E 794, *Standard Test Method for Melting and Crystallization Temperatures by Thermal Analysis*, and shall have a melting point of not less than 204°C (400°F).

7.5.8.5 All auxiliary equipment systems and system component product labels shall be tested for legibility as specified in Section 8.10, Product Label Durability Test, shall be legible, and shall not be torn or otherwise damaged.

7.5.9* All fiber and thread used in the construction of all belts shall be tested for melting as specified in ASTM E 794, *Standard Test Method for Melting and Crystallization Temperatures by Thermal Analysis*, and shall have a melting point of not less than 204°C (400°F).

7.6 Auxiliary Equipment Performance Requirements.

7.6.1 Carabiners and Snap-Link Performance Requirements.

7.6.1.1 Light-use carabiners and snap-links shall be tested for strength as specified in Section 8.5, Carabiner and Snap-Link Tensile Test, and shall, with the gate closed, have a major axis minimum breaking strength of at least 27 kN (6069 lbf).

7.6.1.2 Light-use carabiners and snap-links shall be tested for strength as specified in Section 8.5, Carabiner and Snap-Link Tensile Test, and shall, with the gate open, have a major axis minimum breaking strength of at least 7 kN (1574 lbf).

7.6.1.3 Light-use carabiners and snap-links shall be tested for strength as specified in Section 8.5, Carabiner and Snap-Link Tensile Test, and shall have a minor axis minimum breaking strength of at least 7 kN (1574 lbf).

7.6.1.4 General-use carabiners and snap-links shall be tested for breaking strength as specified in Section 8.5, Carabiner and Snap-Link Tensile Test, and shall, with the gate closed, have a major axis minimum breaking strength of at least 40 kN (8992 lbf).

7.6.1.5 General-use carabiners and snap-links shall be tested for breaking strength as specified in Section 8.5, Carabiner and Snap-Link Tensile Test, and shall, with the gate open, have a major axis minimum breaking strength of at least 11 kN (2473 lbf).

7.6.1.6 General-use carabiners and snap-links shall be tested for breaking strength as specified in Section 8.5, Carabiner and Snap-Link Tensile Test, and shall have a minor axis minimum breaking strength of at least 11 kN (2473 lbf).

7.6.1.7 Permanently attached carabiner and snap-link product labels shall be tested for legibility as specified in Section 8.10, Product Label Durability Test, and shall be legible, and shall not be torn or otherwise damaged.

7.6.1.8 All metal hardware and hardware that includes metal parts shall be tested for corrosion resistance as specified in Section 8.8, Corrosion Resistance Test, and metals inherently resistant to corrosion including but not limited to stainless steel, brass, copper, aluminum, and zinc shall show no more than light surface–type corrosion or oxidation. Ferrous metals shall show no corrosion of the base metal. All hardware shall remain functional as specified in the manufacturers' operating instructions.

7.6.2 Rope Grab and Ascending Devices Performance Requirements.

7.6.2.1 Light-use rope grab and ascending devices shall be tested for deformation as specified in Section 8.6, Manner of Function Tensile Test, Procedure A, and shall show no permanent damage to the device or damage to the rope.

7.6.2.2 General-use rope grab and ascending devices shall be tested for deformation as specified in Section 8.6, Manner of Function Tensile Test, Procedure A, and shall show no permanent damage to the device or damage to the rope.

7.6.2.3 Permanently attached rope grab and ascending device product labels shall be tested for legibility as specified in Section 8.10, Product Label Durability Test, and shall be legible, and shall not be torn or otherwise damaged.

7.6.2.4 All metal hardware and hardware that includes metal parts shall be tested for corrosion resistance as specified in Section 8.8, Corrosion Resistance Test, and metals inherently resistant to corrosion including but not limited to stainless steel, brass, copper, aluminum, and zinc shall show no more than light surface–type corrosion or oxidation. Ferrous metals shall show no corrosion of the base metal. All hardware shall remain functional as specified in the manufacturers' operating instructions.

7.6.3 Descent Control Device Performance Requirements.

7.6.3.1 Escape descent control devices shall be tested for deformation as specified in Section 8.6, Manner of Function Tensile Test, Procedure A, and shall show no permanent damage or visible deformation to the general shape of the device or damage to the rope.

7.6.3.2 Escape descent control devices shall be tested for breaking strength as specified in Section 8.6, Manner of Function Tensile Test, Procedure B, and shall withstand a minimum test load of at least 13.5 kN (3034 lbf) without failure of the device or failure of the rope.

7.6.3.3 Light-use descent control devices shall be tested for deformation as specified in Section 8.6, Manner of Function Tensile Test, Procedure A, and shall show no permanent damage or visible deformation to the general shape of the device or damage to the rope.

7.6.3.4 Light-use descent control devices shall be tested for breaking strength as specified in Section 8.6, Manner of Function Tensile Test, Procedure B, and shall withstand a minimum test load of at least 13.5 kN (3034 lbf) without failure of the device or failure of the rope.

7.6.3.5 General-use descent control devices shall be tested for deformation as specified in Section 8.6, Manner of Function Tensile Test, Procedure A, and shall show no permanent damage or visible deformation to the general shape of the device or damage to the rope.

7.6.3.6 General-use descent control devices shall be tested for breaking strength as specified in Section 8.6, Manner of Function Tensile Test, Procedure B, and shall withstand a minimum test load of at least 22 kN (4946 lbf) without failure of the device or failure of the rope.

7.6.3.7 Where the descent control device incorporates a passive breaking feature that holds the user in position on the rope, the descent control device shall be tested for passive breaking holding strength as specified in Section 8.11, Passive Brake Holding Test, and shall not slip more than 25 mm (1 in.).

7.6.3.8 Permanently attached descent control device product labels shall be tested for legibility as specified in Section 8.10,

Copyright National Fire Protection Association
Provided by IHS under license with NFPA
No reproduction or networking permitted without license from IHS
Not for Resale

Product Label Durability Test, and shall be legible, and shall not be torn or otherwise damaged.

7.6.3.9 All metal hardware and hardware that includes metal parts shall be tested for corrosion resistance as specified in Section 8.8, Corrosion Resistance Test, and metals inherently resistant to corrosion including but not limited to stainless steel, brass, copper, aluminum, and zinc shall show no more than light surface–type corrosion or oxidation. Ferrous metals shall show no corrosion of the base metal. All hardware shall remain functional as specified in the manufacturers' operating instructions.

7.6.4 Portable Anchor Performance Requirements.

7.6.4.1 Light-use portable anchor devices shall be tested for deformation as specified in Section 8.7, Breaking Strength Test, Procedure A, and all adjustments or moving parts shall remain functional, and shall exhibit no condition that would cause the safety of the user to be compromised.

7.6.4.2 General-use portable anchor devices shall be tested for deformation as specified in Section 8.7, Breaking Strength Test, Procedure A, and all adjustments or moving parts shall remain functional, and shall exhibit no condition that would cause the safety of the user to be compromised.

7.6.4.3 Light-use portable anchor devices shall be tested for strength as specified in Section 8.7, Breaking Strength Test, Procedure B, and shall withstand a minimum load of at least 22 kN (4946 lbf) without failure.

7.6.4.4 General-use portable anchor devices shall be tested for strength as specified in Section 8.7, Breaking Strength Test, Procedure B, and shall withstand a minimum load of at least 36 kN (8093 lbf) without failure.

7.6.4.5 Permanently attached portable anchor product labels shall be tested for legibility as specified in Section 8.10, Product Label Durability Test, and shall be legible, and shall not be torn or otherwise damaged.

7.6.4.6 All metal hardware and hardware that includes metal parts shall be tested for corrosion resistance as specified in Section 8.8, Corrosion Resistance Test, and metals inherently resistant to corrosion including but not limited to stainless steel, brass, copper, aluminum, and zinc shall show no more than light surface–type corrosion or oxidation. Ferrous metals shall show no corrosion of the base metal. All hardware shall remain functional as specified in the manufacturers' operating instructions.

7.6.5 Pulley Performance Requirements.

7.6.5.1 Light-use pulleys shall be tested for deformation as specified in Section 8.7, Breaking Strength Test, Procedure A, and shall show no permanent damage to the device or damage to the rope.

7.6.5.2 Light-use pulleys shall be tested for strength as specified in Section 8.7, Breaking Strength Test, Procedure B, and shall have a minimum tensile strength of at least 22 kN (4946 lbf) without failure.

7.6.5.3 General-use pulleys shall be tested for deformation as specified in Section 8.7, Breaking Strength Test, Procedure A, and shall show no permanent damage to the device or damage to the rope.

7.6.5.4 General-use pulleys shall be tested for strength as specified in Section 8.7, Breaking Strength Test, Procedure B, and shall have a minimum tensile strength of at least 36 kN (8093 lbf) without failure.

7.6.5.5 The becket on light-use pulleys shall be tested for strength as specified in Section 8.7, Breaking Strength Test, Procedure B, and shall have a minimum tensile strength of at least 12 kN (2698 lbf) without failure.

7.6.5.6 The becket on general-use pulleys shall be tested for strength as specified in Section 8.7, Breaking Strength Test, Procedure B, and shall have a minimum tensile strength of at least 19.5 kN (4383 lbf) without failure.

7.6.5.7 Permanently attached pulley product labels shall be tested for legibility as specified in Section 8.10, Product Label Durability Test, and shall be legible, and shall not be torn or otherwise damaged.

7.6.5.8 All metal hardware and hardware that includes metal parts shall be tested for corrosion resistance as specified in Section 8.8, Corrosion Resistance Test, and metals inherently resistant to corrosion including but not limited to stainless steel, brass, copper, aluminum, and zinc shall show no more than light surface–type corrosion or oxidation. Ferrous metals shall show no corrosion of the base metal. All hardware shall remain functional as specified in the manufacturers' operating instructions.

Chapter 8 Test Methods

8.1 Sample Preparation Procedures.

8.1.1 Application.

8.1.1.1 The sample preparation procedures contained in this section shall apply to each test method in this chapter, as specifically referenced in the sample preparation section of each test method.

8.1.1.2 Only the specific sample preparation procedure or procedures referenced in the sample preparation section of each test method shall be applied to that test method.

8.1.2 Room Temperature Conditioning Procedure.

8.1.2.1 Samples shall be conditioned at a temperature of 21°C, ±3°C (70°F, ±5°F) and a relative humidity of 65 percent, ±5 percent for at least 24 hours.

8.1.2.2 Specimens shall be tested within 5 minutes after removal from conditioning.

8.2 Rope Breaking and Elongation Test.

8.2.1 Application.

8.2.1.1 This test shall apply to life safety rope, escape rope, and throwline.

8.2.1.2 Modifications to this test method for testing throwline shall be as specified in 8.2.7.

8.2.2 Sample.

8.2.2.1 Samples for conditioning shall be at least 1 m (1 yd) length of rope for each rope model.

8.2.2.2 Samples shall be conditioned as specified in 8.1.2.

8.2.2.3 All samples for each rope model shall be taken from the same production lot.

Copyright National Fire Protection Association
Provided by IHS under license with NFPA
No reproduction or networking permitted without license from IHS
Not for Resale

8.2.3 Specimens.

8.2.3.1 Specimens shall be as specified in Cordage Institute Standard CI 1801, *Low Stretch and Static Kernmantle Life Safety Rope.*

8.2.3.2 A minimum of five specimens shall be tested.

8.2.4* Procedure. Specimens shall be tested for elongation and minimum breaking strength in accordance with Sections 8 and 9 of Cordage Institute Standard CI 1801, *Low Stretch and Static Kernmantle Life Safety Rope.*

8.2.5 Report.

8.2.5.1 The rope minimum breaking strength shall be determined by subtracting three standard deviations from the mean result of five samples from the same production lot and shall be reported to the nearest 1 N.

8.2.5.2 The standard deviation shall be calculated using the formula:

$$s = \sqrt{\frac{n\left(\sum x^2\right) - \left(\sum x\right)^2}{n(n-1)}}$$

where:
s = standard deviation
n = number of samples
x = breaking strength

8.2.5.3 The elongation at 10 percent of the minimum breaking strength shall be reported to the nearest 0.1 percent.

8.2.5.4 The elongation at 1.35 kN (300 lbf), 2.7 kN (600 lbf), and 4.4 kN (1000 lbf) shall be reported to the nearest 0.1 percent.

8.2.6 Interpretation.

8.2.6.1 Pass/fail performance shall be based on the standard deviation from the mean breaking strength and the elongation at 10 percent of the minimum breaking strength.

8.2.6.1.1 The values obtained in 8.2.5.4 shall not be used to determine pass/fail.

8.2.6.2 One or more specimens failing this test shall constitute failing performance for the rope type.

8.2.7 Specific Requirements for Testing Throwline.

8.2.7.1 For specimens of throwline, only breaking strength testing shall be conducted.

8.2.7.2 Elongation shall not be evaluated.

8.3 Static Test.

8.3.1 Application.

8.3.1.1 This test shall apply to ladder belts, escape belts, and Class 1, Class 2, and Class 3 life safety harness.

8.3.1.2 Each model of belt or life safety harness shall be tested in accordance with Table 8.3.1.2, as appropriate for the product.

8.3.1.3 Modifications to this test method for testing Class I harness shall be as specified in 8.3.8.

8.3.1.4 Modifications to this test method for testing Class II harness shall be as specified in 8.3.9.

8.3.1.5 Modifications to this test method for testing Class III harness shall be as specified in 8.3.10.

8.3.1.6 Modifications to this test method for testing ladder belts shall be as specified in 8.3.11.

8.3.1.7 Modifications to this test method for testing escape belts shall be as specified in 8.3.12.

8.3.1.8 Modifications to this test method for testing positioning attachments shall be as specified in 8.3.13.

8.3.2 Samples.

8.3.2.1 Samples for conditioning shall be whole items.

8.3.2.2 Samples shall be conditioned as specified in 8.1.2.

8.3.2.3 Samples shall be new and in unused condition and shall conform in all respects to the manufacturer's specifications for the model being tested.

8.3.3 Specimens.

8.3.3.1 Specimens shall be whole items.

8.3.3.2* A minimum of three specimens shall be tested for each test.

8.3.4 Apparatus. The rigid test torso specified in Figure 1 of ASTM F 1772, *Standard Specification for Climbing Harnesses*, shall be used with the following modifications, as shown in Figure 8.3.4:

(1) The legs shall be 310 mm, ±30 mm (12 in., ±1 in.) in length.
(2) The distance between the inner thighs at the crotch shall be 50 mm, ±5 mm (2 in., ±¼ in.).

8.3.4.1 The test torso shall weigh 136 kg, ±1 kg (300 lb, ±2¼ lb).

8.3.4.2 The test torso with the sample harness attached shall be identified as the test mass.

8.3.5 Procedure.

8.3.5.1 The test mass shall be attached to the test machine at the load-bearing attachment point, in accordance with the manufacturer's instruction for use, with a suitable locking carabiner.

8.3.5.2 The test mass shall be properly positioned by preloading up to 800 N (181 lbf) with the test torso in the required position.

8.3.5.3 Under the load specified in 8.3.5.2, the load-bearing attachment point(s) shall be placed approximately symmetrically about the vertical axis of the test torso as shown in Figure 8.3.5.3.

8.3.5.4 For the upright position, the test torso shall be oriented in an upright position. For the head-down position, the test torso shall be oriented in a head-down position. For the horizontal position, the test torso shall be oriented in a horizontal position supported by the neck and buttocks rings.

8.3.5.4.1 For the upright position, the force shall be applied to the buttocks ring, increasing to the specified load for the type of device over a period of 2 minutes, +15/−0 seconds.

8.3.5.4.2 For the head-down position, the force shall be applied to the neck ring, increasing to the specified load for the type of device over a period of 2 minutes, +15/−0 seconds.

--`,,```,,,,````-`-`,,`,,`,`,,`---

Copyright National Fire Protection Association
Provided by IHS under license with NFPA
No reproduction or networking permitted without license from IHS
Not for Resale

Table 8.3.1.2 Static Test Matrix

Test	Class I	Class II	Class III	Ladder Belt	Escape Belt
Upright	YES	YES	YES	YES	YES
Head Down	NO	NO	YES	NO	NO
Horizontal	NO	NO	NO	YES	NO

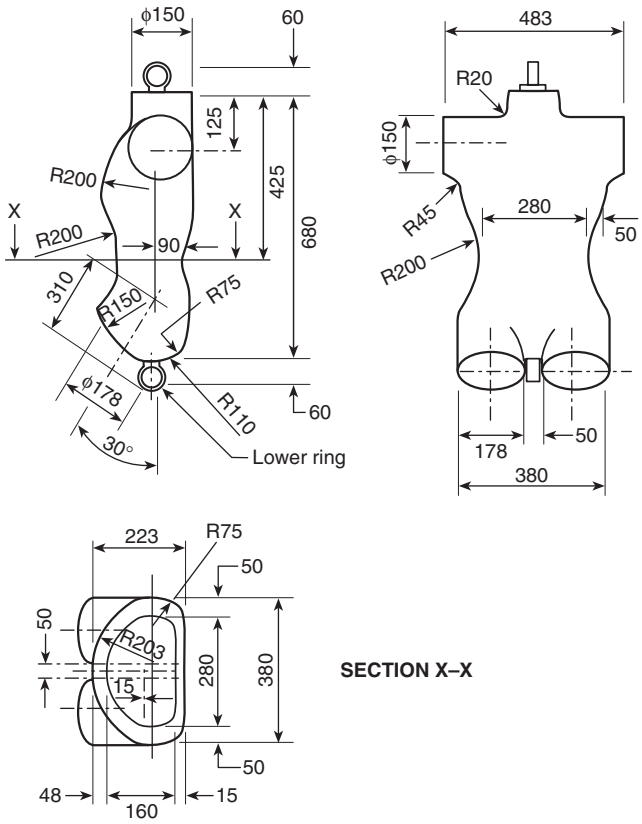

Notes:
Waist circumference at X–X is 750 mm.
All linear dimensions are in millimeters, ±5 mm.
The dimensions are those of a dummy developed by the UIAA for testing harnesses.

FIGURE 8.3.4 Outline of the Test Torso.

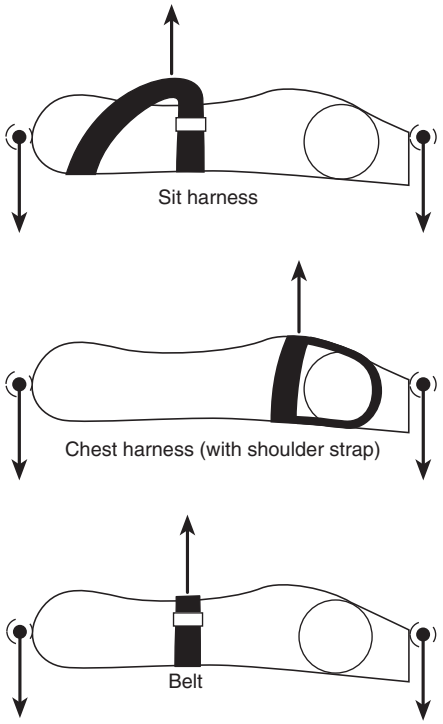

FIGURE 8.3.5.3 Test Torso Orientations for Harness Test and Belt Test.

8.3.5.4.3 For the horizontal position, the force shall be applied to the neck and buttocks rings in the plane of symmetry of the test torso and normal to its axis as shown in Figure 8.3.5.3, increasing to the specified load for the type of device over a period of 2 minutes, +15/−0 seconds.

8.3.5.5 The specified load for the type of device being tested shall be held for 1 minute, +15/−0 seconds and then tension shall be completely released over a maximum of 1 minute.

8.3.5.6 The specified load for the type of device being tested shall be reapplied immediately and held for 5 minutes, +15/−0 seconds before release.

8.3.5.7 The sample shall be evaluated at the conclusion of each static test series.

8.3.6 Report.

8.3.6.1 For each position tested, any release from the test torso shall be reported.

8.3.6.2 For each position tested, the amount of slip of any buckles and adjustment devices shall be reported.

8.3.6.3 For each position tested, any visible signs of damage that would affect the function of the harness shall be reported.

8.3.7 Interpretation.

8.3.7.1 Any release from the test torso shall constitute failing performance.

8.3.7.2 The amount of slip of any buckles and adjustment devices shall be used to determine pass/fail.

8.3.7.3 A harness shall be considered to be damaged to the point of failing this test if any condition that compromises the safety of the user such as but not limited to any load-bearing material being torn or damaged or where a buckle becomes nonfunctional.

8.3.8 Specific Requirements for Testing Class I Harness.

8.3.8.1 Class I harness shall be tested in the upright position only as specified in Table 8.3.1.2.

Copyright National Fire Protection Association
Provided by IHS under license with NFPA
No reproduction or networking permitted without license from IHS
Not for Resale

8.3.8.2* The load applied for the upright position shall be 16 kN (3597 lbf).

8.3.9 Specific Requirements for Testing Class II Harness.

8.3.9.1 Class II harness shall be tested in the upright position, as specified in Table 8.3.1.2.

8.3.9.2* The load applied for the upright position shall be 16 kN (3597 lbf).

8.3.10 Specific Requirements for Testing Class III Harness.

8.3.10.1 Class III harness shall first be tested in the upright position, followed by the head-down position, as specified in Table 8.3.1.2.

8.3.10.2* The load applied for the upright position shall be 16 kN (3597 lbf), and the load applied for the head-down position shall be 10 kN (2248 lbf).

8.3.10.3 Where sample Class III life safety harness include shoulder attachment points, such shoulder attachment points shall only be tested as specified in 8.3.5.4.1 for the upright position as a pair using an appropriate spreader device.

8.3.11 Specific Requirements for Testing Ladder Belt.

8.3.11.1 Ladder belts shall first be tested in the upright position, followed by the horizontal position as specified in Table 8.3.1.2.

8.3.11.2* The load applied for the upright position shall be 13 kN (2923 lbf) and the load applied for the horizontal position shall be 10 kN (2248 lbf).

8.3.12 Specific Requirements for Testing Escape Belt.

8.3.12.1 Escape belts shall first be tested in the upright position, as specified in Table 8.3.1.2.

8.3.12.2* The load applied for the upright position shall be 13 kN (2923 lbf).

8.3.13 Specific Requirements for Testing Positioning Attachments.

8.3.13.1 Where used on ladder belts, side D-rings and attachment points designated by the manufacturer for use as positioning attachments only shall be tested as positioning attachments and shall be tested as specified in 8.3.5.4.1 for the upright position and 8.3.5.4.3 for the horizontal position.

8.3.13.1.1 The load applied for the upright position shall be 13 kN (2923 lbf) and the load applied for the horizontal position shall be 10 kN (2248 lbf).

8.3.13.2 Where used on escape belts and harnesses, side D-rings and attachment points designated by the manufacturer for use as positioning attachments only shall be tested as positioning attachments and shall be tested as specified in 8.3.5.4.1 for the upright position.

8.3.13.2.1 The load applied for the upright position shall be 13 kN (2923 lbf).

8.4 Drop Test.

8.4.1 Application.

8.4.1.1 This test shall apply to life safety harness and escape belts.

8.4.1.2 Each model of escape belt or life safety harness shall be tested in accordance with Table 8.4.1.2, as appropriate for the type of belt and class of harness.

8.4.1.3 Modifications to this test method for testing escape belts shall be as specified in 8.4.8.

8.4.1.4 Modifications to this test method for testing life safety harness shall be as specified in 8.4.9.

8.4.2 Samples.

8.4.2.1 Samples for conditioning shall be whole items.

8.4.2.2 Samples shall be conditioned as specified in 8.1.2.

8.4.2.3 Samples shall be new and in unused condition and shall conform in all respects to the manufacturer's specifications for the model to be tested.

8.4.3 Specimens.

8.4.3.1 Specimens shall be whole items.

8.4.3.2* A total of three specimens shall be tested for each test.

8.4.4 Apparatus.

8.4.4.1 The rigid test torso specified in Figure 1 of ASTM F 1772, *Standard Specification for Climbing Harnesses*, shall be used with the following modifications, as shown in Figure 8.3.4:

(1) The legs shall be 310 mm, ±30 mm (12 in., ±1 in.) in length.
(2) The distance between the inner thighs at the crotch shall be 50 mm, ±5 mm (2 in., ±¼ in. .

8.4.4.1.1 The test torso shall weigh 136 kg, ±1 kg (300 lb, ±2¼ lb).

8.4.4.1.2 The test torso with the sample harness attached shall be identified as the test mass.

8.4.4.2 A drop tower shall be used and shall have an anchorage point that shall not have a deflection greater then 1 mm (0.04 in.) when a force of 10 kN (2250 lbf) is applied.

8.4.4.3 A test lanyard shall be used to connect the load-bearing attachment point(s) to the test mass and shall be fabricated from Type 302 stainless steel, 7 × 19 aircraft cable construction in accordance with MIL-W-83420D.

8.4.4.3.1 The test lanyard shall be 9.5 mm (⅜ in.) in diameter and 1.2 m, ±13 mm (47 in., ±½ in.) in length measured from bearing point to bearing point between snap hooks when the lanyard is under tension of 50 N (1 lbf).

8.4.4.3.2 The lanyard shall be equipped with a snap hook at each end.

8.4.4.3.3 The lanyard shall be connected to the load-bearing attachment point(s) of the test mass.

8.4.4.3.4 The lanyard ends shall be finished with swaged eyes in such a manner as to prevent slippage of the eyes and snap hooks that would change the length of the test lanyard.

8.4.5 Procedure.

8.4.5.1 The sample shall be secured to the test torso, that is, the test mass, and the test torso shall be connected to the drop tower anchorage point.

8.4.5.2 One end of the test lanyard shall be attached to a load-bearing attachment point, and the other end shall be attached to the anchorage.

8.4.5.3 The attachment point of the sample on the test mass shall be raised to and released from a point no more than 305 mm (12 in.) horizontally from the anchorage.

Copyright National Fire Protection Association
Provided by IHS under license with NFPA
No reproduction or networking permitted without license from IHS
Not for Resale

Table 8.4.1.2 Harness Drop Test Matrix

Test	Class I	Class II	Class III	Ladder Belt	Escape Belt
Drop	YES	YES	YES	NO	YES

8.4.5.4 The attachment point of the sample on the test mass shall be in a position that will allow it to fall freely a distance of 1 m (39 in.) to a free-hanging position without interference or obstruction or striking the floor, ground, or any other object during the test.

8.4.6 Report. For each sample tested during the drop test series, the result of each drop test shall be individually reported for each anchorage point.

8.4.7 Interpretation. A specimen shall be considered to have failed the test if, during any one of the required drops for any sample, the test mass impacts the ground.

8.4.8 Specific Requirements for Testing Escape Belt.

8.4.8.1 Each model of belt shall be tested according to Table 8.4.1.2 for the appropriate belt type.

8.4.8.2 A minimum of two drop tests shall be conducted for each specimen.

8.4.8.2.1 The first drop test shall be conducted for each load-bearing attachment point with the test mass in a head-up position.

8.4.8.2.2 The second drop test shall be conducted for each load-bearing attachment point with the test mass in a head-down position.

8.4.9 Specific Requirements for Testing Life Safety Harness.

8.4.9.1 Each model of harness shall be tested according to Table 8.4.1.2 for the appropriate class harness.

8.4.9.2 A minimum of two drop tests shall be conducted for each specimen.

8.4.9.2.1 The first drop test shall be conducted for each load-bearing attachment point with the test mass in a head-up position.

8.4.9.2.2 The second drop test shall first be conducted for each load-bearing attachment point with the test mass in a head-down position.

8.5 Carabiner and Snap-Link Tensile Test.

8.5.1 Application. This test method shall apply to all carabiners and snap links.

8.5.2 Samples.

8.5.2.1 Samples for conditioning shall be whole items.

8.5.2.2 Samples shall be conditioned as specified in 8.1.2.

8.5.2.3 Samples shall be new and in unused condition and shall conform in all respects to the manufacturer's specification for the model being tested.

8.5.2.4 Samples shall be taken from the same production lot for each model tested.

8.5.3 Specimens.

8.5.3.1 Specimens shall be whole items.

8.5.3.2 A total of five specimens shall be tested for each performance requirement.

8.5.3.3 A separate specimen shall be used for each test.

8.5.4 Procedure. Test methods shall be conducted per ASTM F 1956, *Standard Specification for Rescue Carabiners.*

8.5.5 Report.

8.5.5.1 The breaking strength of each specimen shall be reported to the 0.1 kN (23 lb) of force.

8.5.5.2 An average breaking strength shall be calculated for each position tested.

8.5.5.3 The carabiner minimum breaking strength shall be determined by subtracting three standard deviations from the mean results of five samples from the same production lot and shall be reported to the nearest 0.1 kN (23 lbf). The MBS shall be provided on the product label as specified in Section 5.1, Product Label Requirements.

8.5.5.4 The standard deviation shall be calculated using the formula in 8.2.5.2.

8.5.6 Interpretation.

8.5.6.1* Pass/fail performance shall be based on the MBS for each of the individual positions tested.

8.5.6.2 Failure in any position constitutes failure for the carabiner or snap link.

8.6 Manner of Function Tensile Test.

8.6.1 Application.

8.6.1.1 This test shall apply to ascending devices, rope grab devices, and descent control devices.

8.6.1.2 Modifications to this test method for testing ascending devices and rope grab devices shall be as specified in 8.6.7.

8.6.1.3 Modifications to this test method for testing descent control devices shall be as specified in 8.6.8.

8.6.2 Samples.

8.6.2.1 Samples for conditioning shall be whole items.

8.6.2.2 Samples shall be conditioned as specified in 8.1.2.

8.6.2.3 Samples shall be new and in unused condition and shall conform in all respects to the manufacturer's specifications for the model to be tested.

8.6.3 Specimens.

8.6.3.1 Specimens shall be whole items.

8.6.3.2 A total of five specimens shall be tested.

8.6.3.3 Each specimen shall be tested to both Procedure A and Procedure B.

Copyright National Fire Protection Association
Provided by IHS under license with NFPA
No reproduction or networking permitted without license from IHS
Not for Resale

8.6.4 Procedure.

8.6.4.1 Testing shall be conducted in the "manner of function" for the item being tested.

8.6.4.2 Testing shall be conducted using both the smallest and largest diameter life safety rope specified by the device manufacturer for testing.

8.6.4.2.1 Testing shall be conducted using a rope with the same NFPA designation as the device being tested, unless such rope is outside of the range of ropes that the manufacturer specifies for the safe and critical function of the device.

8.6.4.2.2 The rope used for testing shall meet the static rope requirements of Cordage Institute Standard CI 1801, *Low Stretch and Static Kernmantle Life Safety Rope*.

8.6.4.2.3 The device shall be attached to the rope according to the manufacturer's instructions.

8.6.4.3 Procedure A.

8.6.4.3.1 One end of the rope shall be anchored on to a tensile testing machine and the device shall be anchored to the other end of the rope. The specified deformation force shall be applied to the device at the normal attachment point at a rate of 25 mm/min, ±5 mm/min (1 in./min, ±¼ in./min).

8.6.4.3.2 The specified deformation force shall be held for 30 seconds, +1/−0 second, and then the tension shall be completely released over a maximum of 1 minute.

8.6.4.3.3 The device shall then be inspected for damage to the device or to the rope used for testing.

8.6.4.4 Procedure B.

8.6.4.4.1 Using the same item and test set up as in Procedure A, the load shall then be re-applied to the device until the breaking point of the device.

8.6.4.4.2 The force shall be applied at a rate of 25 mm/min, ±5 mm/min (1 in./min, ±¼ in./min).

8.6.4.4.3 In the case of items that are designed to slip under high load, the rope shall be knotted or the device otherwise blocked to prevent slippage once the device has held at least 5 kN (1124 lbf) for light-use and 9 kN (2023 lbf) for general-use items.

8.6.5 Report.

8.6.5.1 The condition of the item and the rope shall be recorded after the deformation load has been applied.

8.6.5.2 The minimum breaking strength shall be determined by subtracting three standard deviations from the mean results of samples from the same production lot and shall be reported to the nearest 1.0 kN (230 lbf). The MBS shall be provided on the product label as specified in Section 5.1, Product Label Requirements.

8.6.5.3 The standard deviation shall be calculated using the formula in 8.2.5.2.

8.6.5.3.1 Where the minimum breaking strength exceeds 111 kN (25,000 lbf) without failure, the average breaking strength shall be reported as >111 kN (>25,000 lbf). The product label required in 5.1.6 shall also indicate the minimum breaking strength as >111 kN (>25,000 lbf).

8.6.6 Interpretation. One or more specimens failing this test shall constitute failing performance for the item being tested.

8.6.7 Specific Requirements for Testing Ascent Devices, Rope Grab Devices, and Escape Manufactured Systems.

8.6.7.1 Light-use ascent devices, rope grab devices, and escape manufactured systems shall be tested at a load of 5 kN (1124 lbf) for Procedure A.

8.6.7.2 General-use ascending devices and rope grab devices shall be tested at a load of 11 kN (2500 lbf) for Procedure A.

8.6.8 Specific Requirements for Testing Descent Control Devices.

8.6.8.1 Escape, light-use, and general-use descent control devices shall be tested at a load of 5 kN (1124 lbf) for Procedure A.

8.6.8.2 The device shall be attached to the rope according to the manufacturer's instructions in the locked-off mode of attachment.

8.7 Breaking Strength Test.

8.7.1 Application.

8.7.1.1 This test shall apply to portable anchor devices, other auxiliary equipment, manufactured systems, pick-off straps, anchor straps, and rigging straps.

8.7.1.2 Specific requirements for testing portable anchors shall be as specified in 8.7.8.

8.7.1.3 Specific requirements for testing pulleys shall be as specified in 8.7.9.

8.7.1.4 Specific requirements for testing auxiliary equipment systems, system components, and manufactured systems shall be as specified in 8.7.10.

8.7.1.5 Specific requirements for testing pick-off, anchor, and rigging straps shall be as specified in 8.7.11.

8.7.2 Samples.

8.7.2.1 Samples for conditioning shall be whole items or systems.

8.7.2.2 Samples shall be conditioned as specified in 8.1.2.

8.7.2.3 Samples shall be new and in unused condition and shall conform in all respects to the manufacturer's specifications for the model being tested.

8.7.3 Specimens.

8.7.3.1 Specimens shall be whole items or systems.

8.7.3.2 A total of five specimens shall be tested.

8.7.4 Procedure A.

8.7.4.1* The device shall be positioned as required for the type of device being tested in the lowest strength configuration of the device as specified by the manufacturer.

8.7.4.2 A force shall be applied to the device, increasing to the load specified at a rate of 25 mm/min, ±5 mm/min (1 in./min, ±¼ in./min).

8.7.4.3 The force shall be held for 30 seconds, ±1.0 second, and then the tension shall be completely released over a maximum of 1 minute.

8.7.4.4 The force shall be reapplied immediately and shall be increased to the same maximum force as previously exerted and held for 1 minute, +15/−0 seconds before release.

--`,,```,,,,````-`-`,,`,,`,`,,`---

Copyright National Fire Protection Association
Provided by IHS under license with NFPA
No reproduction or networking permitted without license from IHS
Not for Resale

8.7.4.5 At the conclusion of Procedure A, the specimen device shall be inspected for deformation.

8.7.5 Procedure B.

8.7.5.1* Using a new specimen and the test set up as in Procedure A, the load shall be re-applied to the lowest strength configuration of the device as specified by the manufacturer until the breaking point of the device.

8.7.5.2 The force shall be applied at a rate of 25 mm/min, ±5 mm/min (1 in./min, ±¼ in./min).

8.7.5.3 During testing, where the rope breaks before the device and that breaking strength exceeds the designated use rating required for escape, light use, or general use, then pins shall be permitted to be used to determine MBS.

8.7.6 Report.

8.7.6.1 The minimum breaking strength shall be determined by subtracting three standard deviations from the mean results of five samples from the same production lot and shall be reported to the nearest 0.1 kN (23 lbf). The MBS shall be provided on the product label as specified in Section 5.1.

8.7.6.2 The standard deviation shall be calculated using the formula in 8.2.5.2.

8.7.6.3 The deflection of the load-bearing members from their original position shall be recorded.

8.7.6.4 The functionality of adjustment and moving parts shall be recorded.

8.7.6.5 Where applicable, the movement of all base contact points from their original positions shall be recorded.

8.7.6.6 Any condition that would cause the safety of the user to be compromised shall be recorded.

8.7.6.7 Any fracture of the load-bearing members, collapse, or other condition that would cause the user to be dropped shall be reported.

8.7.6.8* The configuration of the attachment of the device to the testing machine shall be recorded and reported.

8.7.7 Interpretation. One or more specimens failing this test shall constitute failing performance for the item being tested.

8.7.8 Specific Requirements for Testing Portable Anchors.

8.7.8.1 Two specimens shall be tested.

8.7.8.2 Where there are multiple load-bearing attachment points, Procedure A and Procedure B shall be repeated for each combination of load-bearing attachment points specified in the manufacturer's instructions.

8.7.8.3 The device shall be attached to the test machine at the load-bearing attachment point, in accordance with the manufacturer's instructions for use, with a suitable locking carabiner.

8.7.8.4 Before testing, the device shall be positioned with all surface contact points securely seated on a flat, unfinished concrete surface in the manner described by the manufacturer's instructions.

8.7.8.5* Where portable anchor devices are designed to be affixed to a base that is not part of the device, the manufacturer shall provide a test base that most closely resembles the structural element to which the device is designed to be affixed.

8.7.8.5.1 The test base shall be completely stable and shall be permitted to be bolted down to prevent movement during the test.

8.7.8.6 The portable anchor device shall be accompanied by all adjuncts required for use as described by the manufacturer's instructions for use.

8.7.8.6.1 Devices shall not be bolted to, tied off, or affixed to the test base in any way unless required to be by the manufacturer for normal use.

8.7.8.6.2 All adjuncts designed by the manufacturer to be used in conjunction with the device, including but not limited to ropes, chains, webbing, rope grabs, and bolts, shall be in place during the test.

8.7.8.7 For Procedure B, each point of contact with the test surface shall be marked in some manner to allow the ability to assess movement of the base during the test.

8.7.8.8 The test load used for Procedure A shall be 5 kN (1124 lbf) for light-use portable anchors and 13 kN (2923 lbf) for general-use portable anchors.

8.7.9 Specific Requirements for Testing Pulleys.

8.7.9.1 Pulleys shall be tested using a wire rope with a diameter equal to or less than the maximum size of rope specified for the pulley and of sufficient strength. The wire rope shall include a swaged loop that fits the pulley being tested.

8.7.9.2 Tension shall be applied between the wire rope loop and a 12.5 mm (½ in.) pin through the pulley carabiner hole as specified in Figure 8.7.9.2 until failure.

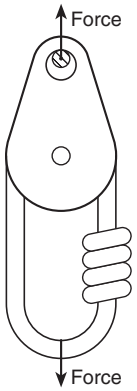

FIGURE 8.7.9.2 Pulley Tensile Test.

8.7.9.3 Fixture design and device placement in fixture shall not allow the fixture to interfere with the pulley during the test.

8.7.9.4 Pulleys with two or more sheaves shall have a single rope looped around all sheaves and the load applied to each loop.

8.7.9.5 Pulleys that include a becket at the bottom of the pulley shall have the becket tested by applying a load longitudinally between the carabiner hole and the becket.

8.7.9.6 The test load used for Procedure A shall be 5 kN (1124 lbf) for light-use pulleys and 22 kN (4946 lbf) for general-use pulleys.

Copyright National Fire Protection Association
Provided by IHS under license with NFPA
No reproduction or networking permitted without license from IHS
Not for Resale

8.7.10 Specific Requirements for Auxiliary Equipment Systems, System Components, and Manufactured Systems.

8.7.10.1 Only Procedure B shall be conducted on auxiliary equipment systems, system components, and manufactured systems.

8.7.10.2 Auxiliary equipment and manufactured systems shall be tested using a rope with a diameter of the smallest and largest size specified by the auxiliary equipment manufacturer.

8.7.10.3 Where there are multiple load-bearing attachment points, Procedure B shall be repeated for each combination of load-bearing attachment points specified in the manufacturer's instructions.

8.7.10.4 The device shall be attached to the test machine at the load-bearing connecting point, in accordance with the manufacturer's instructions for use.

8.7.10.5 For all tests, the device shall be accompanied by all equipment required for use as described by the manufacturer's instructions for use.

8.7.10.6 Only the requirements specified in 8.7.6.1 shall be reported.

8.7.11 Specific Requirements for Testing Pick-off, Anchor and Rigging Straps.

8.7.11.1 Only Procedure B shall be conducted on pick-off, anchor, and rigging straps.

8.7.11.2* Testing shall be conducted using 13 mm, ±1 mm (½ in., ±⅛ in.) pins, bolts, or shackles. The test fixture shall be designed such that the strap is free to locate itself on the test pins when the force is applied.

8.7.11.3 Test pin cross-section shall be permitted to be other than round. Any cross-section necessary to prevent test pin failure or any design to prevent test pin rotation shall be permitted as long as the contact point between the test pin and strap attachment point has the specified radius, material type, hardness, and surface roughness.

8.7.11.4 The test fixture shall be designed to prevent the test pins from rotating such that the strap is free to locate itself on the test pins when force is applied.

8.7.11.5 Where the strap is adjustable in length, the strap shall be tested in the shortest length that places the adjustment device free of any interference of the test fixture.

8.7.11.6 Light-use and general-use rigging straps and anchor straps shall be individually tested in the basket (U) configuration, the end-to-end configuration, and the choker configuration.

8.7.11.7 For light-use and general-use rigging straps and anchor straps, all configuration values shall be reported on the product label. Only the basket (U) configuration value shall be utilized to determine pass/fail.

8.7.11.8 Light-use and general-use pick-off straps shall be individually tested in the end-to-end configuration.

8.7.11.9 Where the strap is adjustable in length, the slippage of the adjustment device shall be measured and reported upon completion of the test.

8.8 Corrosion Resistance Test.

8.8.1 Application. This test shall apply to all metal hardware and hardware that includes metal parts.

8.8.2 Samples.

8.8.2.1 Samples for conditioning shall be metal hardware or hardware that includes metal parts.

8.8.2.2 Samples shall be conditioned as specified in 8.1.2.

8.8.3 Specimens.

8.8.3.1 Specimens shall be metal hardware or hardware that includes metal parts.

8.8.3.2 Five specimens of each hardware type shall be tested.

8.8.4 Procedure.

8.8.4.1 Specimens shall be tested in accordance with ASTM B 117, *Standard Practice for Operating Salt Spray (Fog) Apparatus.* Salt spray shall be 5 percent saline solution, and test exposure shall be for 50 hours.

8.8.4.2 Immediately following the test exposure and prior to examination, specimens shall be rinsed under warm, running tap water and dried with compressed air.

8.8.4.3 Specimens shall then be examined visually by the unaided eye to determine pass/fail.

8.8.4.4 The functionality of each specimen shall be evaluated.

8.8.5 Report. The presence of corrosion and the functionality of each specimen shall be reported.

8.8.6 Interpretation. One or more hardware specimens failing this test shall constitute failing performance for the hardware type.

8.9 Floatability Test.

8.9.1 Application. This test shall apply to throwline.

8.9.2 Samples.

8.9.2.1 Samples for conditioning shall be at least 1 m (1 yd) in length.

8.9.2.2 Samples shall be conditioned as specified in 8.1.2.

8.9.3 Specimens.

8.9.3.1 Specimens shall be 1 m (1 yd) in length.

8.9.3.2 A minimum of three specimens shall be tested.

8.9.3.3 The ends of the specimen shall be heat-sealed.

8.9.4 Procedure.

8.9.4.1 Specimens shall be completely immersed in a sufficiently sized vessel of fresh water at a temperature of 21°C, ±3°C (70°F, ±5°F) for a period of 24 hours, +1/–0 hour.

8.9.4.2 The throwline shall then be allowed, over a maximum of 1 minute, to float to the surface.

8.9.5 Report. Observation of each specimen's ability to float within 1 minute shall be reported.

8.9.6 Interpretation. The entire length of the throwline shall float to constitute passing performance.

Copyright National Fire Protection Association
Provided by IHS under license with NFPA
No reproduction or networking permitted without license from IHS
Not for Resale

8.10 Product Label Durability Test.

8.10.1 Application.

8.10.1.1 This test method shall apply to permanently attached product labels and identification tapes, excluding metal stamped or engraved labels.

8.10.1.2 Specific requirements for testing rope and throwline identification tapes shall be specified in 8.10.7.

8.10.1.3 Specific requirements for testing all other labels shall be specified in 8.10.8.

8.10.2 Samples.

8.10.2.1 Samples for conditioning shall be individual labels or, in the case of rope or throwline, at least 1 m (1 yd) in length.

8.10.2.2 Samples shall be conditioned as specified in 8.1.2.

8.10.3 Specimens.

8.10.3.1 Specimens shall be individual labels or, in the case of rope or throwline, 1 m (1 yd) in length.

8.10.3.2 A minimum of four of each type of label shall be tested.

8.10.3.3 Where labels have "write-in" information, two additional specimens shall be tested that include those areas with sample information written in.

8.10.4 Procedures.

8.10.4.1 Abrasion Durability Test.

8.10.4.1.1 Product label specimens shall be subjected to abrasion in accordance with ASTM D 4966, *Standard Test Method for Abrasion Resistance of Textile Fabrics*, with the following modifications:

(1) The standard abrasive fabric and the felt-backing fabric shall be soaked for 24 hours or agitated in distilled water so that they are thoroughly wet.
(2) The standard abrasive fabric shall be rewetted after each set of cycles by applying 20 ml (0.68 oz) of distilled water from a squeeze bottle by squirting on the center of the abrasive pad.
(3) At least two specimens shall be subjected to 10 dry cycles, 160 revolutions, of the test apparatus.
(4) At least two specimens shall be subjected to 5 wet cycles, 80 revolutions, of the test apparatus.
(5) At least one dry and one wet test specimen shall be edge specimens.
(6) Where labels include "write-in" information at least one sample shall be tested in the dry condition and one specimen shall be tested in the wet condition.

8.10.4.1.2 Specimens shall be examined for legibility to the unaided eye by a person with 20/20 vision, or vision corrected to 20/20, at a nominal distance of 305 mm (12 in.) in a well-illuminated area.

8.10.4.2 Laundering Durability Test.

8.10.4.2.1 Specimens shall be subjected to five cycles of laundering using Machine Cycle 1 and Wash Temperature V of AATCC 135, *Dimensional Changes in Automatic Home Laundering of Woven and Knit Fabrics*.

8.10.4.2.2 A 1.8 kg ±0.1 kg (4.0 lb ±¼ lb) load shall be used. A laundry bag shall not be used.

8.10.4.2.3 Specimens shall be examined for legibility to the unaided eye by a person with 20/20 vision, or vision corrected to 20/20, at a nominal distance of 305 mm (12 in.) in a well-illuminated area.

8.10.4.2.4 Specimens shall be examined to determine if the label remained in place.

8.10.5 Report.

8.10.5.1 The legibility for each specimen shall be recorded and reported as acceptable or unacceptable.

8.10.5.2 For rope and throwline, the ability of the label to remain in place shall be reported.

8.10.6 Interpretation. One or more label specimens failing this test shall constitute failing performance.

8.10.7 Specific Requirements for Testing Rope and Throwline Labels. All rope and throwline inserted identification tapes shall be tested for laundering durability as specified in 8.10.4.2.

8.10.8 Specific Requirements for Testing All Other Labels. All harness and belt product labels shall only be tested for abrasion durability as specified in 8.10.4.1.

8.11 Passive Brake Holding Test.

8.11.1 Application. This test shall apply to all descent devices containing a passive brake device.

8.11.2 Samples.

8.11.2.1 Samples for conditioning shall be whole items.

8.11.2.2 Samples shall be conditioned as specified in 8.1.2.

8.11.2.3 Samples shall be new and in unused condition and shall conform in all respects to the manufacturer's specifications for the model being tested.

8.11.3 Specimens.

8.11.3.1 Specimens shall be whole items.

8.11.3.2 Three specimens shall be tested.

8.11.4 Procedure.

8.11.4.1 Testing shall be conducted using both the smallest and largest diameter life safety rope specified by the descent control device manufacturer for testing.

8.11.4.2 The rope used for testing shall meet the static rope requirements of Cordage Institute Standard CI 1801, *Low Stretch and Static Kernmantle Life Safety Rope*.

8.11.4.3 The descent control device shall be attached to the rope according to the manufacturer's instructions.

8.11.4.4 One end of the rope shall be anchored on to a tensile testing machine and the descent control device with passive brake deployed shall be anchored to the other end of the rope. A force shall be applied to the device at the normal attachment point at a rate of 25 mm/min, ±5 mm/min (1 in./min, ±¼ in./min).

8.11.4.4.1 The force for escape and light-use descent control devices shall be 1.35 kN (300 lbf) and for general-use descent control devices shall be 2.7 kN (600 lbf).

8.11.4.5 The specified deformation force shall be held for 30 seconds, +1/–0 second, and then the tension shall be completely released over a maximum of 1 minute.

Copyright National Fire Protection Association
Provided by IHS under license with NFPA
No reproduction or networking permitted without license from IHS
Not for Resale

8.11.4.5.1 Any slippage of the descent control device on the rope shall then be measured.

8.11.5 Report. The slip of the descent device at the specified load shall be reported.

8.11.6* Interpretation. One or more specimens failing this test shall constitute failing performance for the item being tested.

Annex A Explanatory Material

Annex A is not a part of the requirements of this NFPA document but is included for informational purposes only. This annex contains explanatory material, numbered to correspond with the applicable text paragraphs.

A.1.1.6 This standard includes requirements for fall prevention rope and equipment for emergency services during rescue, fire fighting, and other emergency operations, or during training. It does not include requirements for fall protection for employees working at height in general industry or the construction and demolition industry.

A.1.2.1 Rescue operations are hazardous activities. It is the responsibility of the fire department to obtain expert instruction and to take adequate safety precautions based upon manufacturers' recommendations. Training should include use techniques and maintenance procedures — including properties of life safety rope, escape rope, water rescue throwline, life safety harnesses, belts, and auxiliary equipment — and deployment techniques of this equipment.

A.1.3.4 Fall factors *(as illustrated in Figure A.1.3.4)* are calculated by dividing the distance the person attached to the rope will fall by the length of the rope between him and the rope anchor or belay. Thus, a 305 mm (1 ft) fall on a 150 mm (½ ft) rope would be a fall factor of 2.0; a 305 mm (1 ft) fall on a 305 mm (1 ft) rope would be a 1.0 fall factor; a 305 mm (1 ft) fall on a 1.12 m (4 ft) rope would be a 0.25 fall factor; and a 305 mm (1 ft) fall on a 12.2 m (40 ft) rope would be a 0.025 fall factor. Note as well that a 7.6 m (25 ft) fall on a 30.5 m (100 ft) rope is also a 0.25 fall factor. This formula assumes the fall takes place in free air without rope drag across building edges or through intermediate equipment.

When fall factors of greater than 0.25 are anticipated, such as are possible in lead climbing, dynamic ropes specifically designed for climbing should be considered. Only ropes certified to an appropriate climbing rope standard (i.e., UIAA, CE, etc.) are appropriate for this use. Dynamic climbing ropes should be stored, maintained, inspected, and use-logged in a manner similar to that required for static/low-stretch rope. Such operations are outside the scope of this document. A fall factor of 0.25 is the maximum considered for NFPA 1983.

Recent testing indicates that the formula for calculating fall factors may not translate perfectly from dynamic ropes to the more static design ropes used for fire service operations.

A.3.2.1 Approved. The National Fire Protection Association does not approve, inspect, or certify any installations, procedures, equipment, or materials; nor does it approve or evaluate testing laboratories. In determining the acceptability of installations, procedures, equipment, or materials, the authority having jurisdiction may base acceptance on compliance with NFPA or other appropriate standards. In the absence of such standards, said authority may require evidence of proper installation, procedure, or use. The authority having jurisdiction may also refer to the listings or labeling practices of an organization that is concerned with product evaluations and is thus in a position to determine compliance with appropriate standards for the current production of listed items.

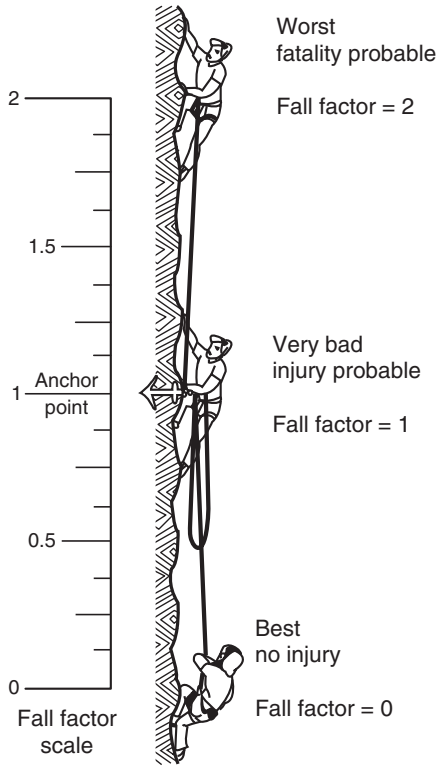

FIGURE A.1.3.4 Fall Factor.

A.3.2.2 Authority Having Jurisdiction (AHJ). The phrase "authority having jurisdiction," or its acronym AHJ, is used in NFPA documents in a broad manner, since jurisdictions and approval agencies vary, as do their responsibilities. Where public safety is primary, the authority having jurisdiction may be a federal, state, local, or other regional department or individual such as a fire chief; fire marshal; chief of a fire prevention bureau, labor department, or health department; building official; electrical inspector; or others having statutory authority. For insurance purposes, an insurance inspection department, rating bureau, or other insurance company representative may be the authority having jurisdiction. In many circumstances, the property owner or his or her designated agent assumes the role of the authority having jurisdiction; at government installations, the commanding officer or departmental official may be the authority having jurisdiction.

A.3.2.4 Listed. The means for identifying listed equipment may vary for each organization concerned with product evaluation; some organizations do not recognize equipment as listed unless it is also labeled. The authority having jurisdiction should utilize the system employed by the listing organization to identify a listed product.

A.3.3.3.1 Load Bearing Attachment Point. Load bearing attachment points are D-rings, loops, or other connection points on a life safety harness and escape belts that are designated for use as the connection point to suspend the full weight of the wearer and equipment such as when ascending

Copyright National Fire Protection Association
Provided by IHS under license with NFPA
No reproduction or networking permitted without license from IHS
Not for Resale

or descending rope and for fall arrest when the wearer may fall and shock load the connection point. These attachment points are designed to withstand the forces generated in a fall arrest situation.

A.3.3.3.2 Positioning Attachment Point. Positioning attachment points are D-rings, loops, or other connection points on a life safety harness or belt that are designated for use solely to support the wearer's weight when connected to an anchor system. Attachment to positioning points can expose the wearer to a fall such as when using a strap connected to side D-rings when connected to a pole or tower. In other situations such as working on rappel, a fall can be much less likely. These attachment points are typically not designed to withstand the forces generated in a fall arrest situation, but can be designed for a much lower-impact fall. If the situation requires the use of fall arrest equipment, the anchor system should be attached to the main attachment point. Manufacturers should clearly identify and the user should be familiar with any attachment points that are only rated as positioning points.

A.3.3.5.1 Escape Belt. The intended use of the escape belt is to provide emergency escape capability to a fire fighter from an immediate life-threatening emergency above the ground floor of a structure. Escape belts do not have leg loops to prevent the belt from rising up the torso of the user. The fire fighter using an escape belt should always be able to maintain foot contact with the surface of the structure during descent or use a life safety harness.

A.3.3.16.2 Ascending Device. Ascent devices for ascending a fixed line are often also referred to as ascenders. These devices are considered part of the larger family group of rope grab devices. Ascenders are most often used in light-use ascent systems although most rope grabs including general use ones can also be used as an ascender.

A.3.3.35.1 Design Load. The design load used in developing the minimum performance requirement of a component to this standard is only applicable when the forces are applied to the component in a direct linear fashion. The loads placed on a component through rigging and creation of a system can be increased due to the vectors used in the rigging. Loads can be amplified substantially when forces are applied in differing directions. Users should develop processes to identify loads placed on each component when creating systems and to determine whether or not they are acceptable. For example, a rope used in a highline system as the main line could be loaded (tensioned) with more than 10 times the actual load being carried across on the highline system depending on the angles involved in the rigging of the highline system.

A.3.3.35.2 Impact Load. For the purposes of this document, fall factors greater than 0.25 generate unacceptable impact loads.

A.3.3.35.3 Proof Load. The applied proof load is usually well above the allowable service load, but low enough so as not to damage the product being tested.

A.3.3.44 Portable Anchor. Examples include but are not limited to davits, A-frames, tripods, quadpods, and cantilever devices.

A.3.3.46 Product Label. This product label is not a certification organization's label, symbol, or identifying mark; however, the certification organization's label, symbol, or identifying mark can be attached to it or be part of it.

A.3.3.50.1 Block Creel Construction. Unavoidable knots could be present in individual fibers as received from the fiber producer.

A.3.3.57 Standard Deviation. In this standard, standard deviation is calculated using the formulas in 8.2.5.2.

A.4.1.7 From time to time the NFPA has received complaints that certain items of fire and emergency services protective clothing or protective equipment could be carrying labels falsely identifying them as compliant with an NFPA standard. The requirement for placing the certification organization's mark on or next to the product label is to help ensure that the purchaser can readily determine compliance of the respective product through independent third-party certification.

NFPA advises those purchasing life safety rope or equipment to be aware that for life safety rope or equipment items to meet the requirements of NFPA 1983, *Standard on Life Safety Rope and Equipment for Emergency Services*, they must be certified by an independent third-party certification organization. *In addition, the item must carry the label, symbol, or other identifying mark of that certification organization.*

A life safety rope or equipment item that does not bear the mark of an independent third-party certification organization is NOT COMPLIANT with NFPA 1983, even if the product label states that the item is compliant!

For further information about certification and product labeling, see Chapters 4 and 5 of NFPA 1983. Also, the definitions for "certification/certified," "labeled," and "listed" in Chapter 3 of this standard should be reviewed.

Third-party certification is an important means of ensuring the quality of emergency services protective clothing and equipment. To be certain that an item is properly certified, labeled, and listed, NFPA recommends that prospective purchasers require appropriate evidence of certification for the specific product and model from the manufacturer before purchasing. Prospective purchasers should also contact the certification organizations and request copies of the certification organization's "list" of products certified to the appropriate NFPA standard. This "listing" is a requirement of third-party certification by this standard and is a service performed by the certification organization.

All NFPA standards on fire and emergency services protective clothing and equipment require that the item be certified by an independent third-party certification organization and, as with NFPA 1983, all items of fire and emergency services protective clothing and equipment must carry the label, symbol, or other identifying mark of that certification organization.

Any item of protective clothing or protective equipment covered by an NFPA standard that does not bear the mark of an independent third-party certification organization is NOT COMPLIANT with the appropriate NFPA standard, even if the product label states that the item is compliant!

A.4.2.1 The certification organization should have sufficient breadth of interest and activity so that the loss or award of a specific business contract would not be a determining factor in the financial well-being of the agency.

A.4.2.5 The contractual provisions covering certification programs should contain clauses advising the manufacturer that if requirements change the product should be brought into compliance with the new requirements by a stated effective date through a compliance review program involving all currently listed products.

Copyright National Fire Protection Association
Provided by IHS under license with NFPA
No reproduction or networking permitted without license from IHS
Not for Resale

Without these clauses, certifiers would not be able to move quickly to protect their name, marks, or reputation. A product safety certification program would be deficient without these contractual provisions and the administrative means to back them up.

A.4.2.6 Investigative procedures are important elements of an effective and meaningful product safety certification program. A preliminary review should be carried out on products submitted to the agency before any major testing is undertaken.

A.4.2.7.1 For further information and guidance on recall programs, see 21 CFR 7, Subpart C.

A.4.2.9 Such inspections should include, in most instances, witnessing of production tests. With certain products, the certification organization inspectors should select samples from the production line and submit them to the main laboratory for countercheck testing. With other products, it could be desirable to purchase samples in the open market for test purposes.

A.4.5.4 For example, this situation exists when the product is wholly manufactured and assembled by another entity, or entities, for a separate entity that puts their own name and label on the product, frequently called "private labeling," and markets and sells the product as their product.

A.4.5.5 Subcontractors should be considered to be, but not be limited to, a person or persons, or a company, firm, corporation, partnership, or other organization having an agreement with or under contract with the compliant product manufacturer to supply or assemble the compliant product or portions of the compliant product.

A.4.6.1 ISO 27, *Guidelines for corrective action to be taken by a certification body in the event of misuse of its mark of conformity,* is a component of accreditation of certification organizations specified in 4.1.4 and 4.2.3 of this standard. Those paragraphs contain a mandatory reference to ISO 65, *General requirements for bodies operating product certification systems,* in which ISO 27 is referenced.

A.4.6.2 By definition, a hazard might involve a condition that can be imminently dangerous to the end user. With this thought in mind, the investigation should be started immediately and completed in as timely a manner as is appropriate considering the particulars of the hazard being investigated.

A.4.6.11 The determination of the appropriate corrective action for the certification organization to initiate should take into consideration the severity of the product hazard and its potential consequences to the safety and health of end users. The scope of testing and evaluation should consider, among other things, testing to the requirements of the standard to which the product was listed as compliant, the age of the product, the type of use and conditions to which the compliant product has been exposed, care and maintenance that has been provided, the use of expertise on technical matters outside the certification organization's area of competence, and product hazards caused by circumstances not anticipated by the requirements of the applicable standard. As a guideline for determining which is more appropriate, a safety alert or a product recall, the following product hazard characteristics, based on 42 CFR 84, Subpart E, §84.41, are provided.

(1) Critical: A product hazard that judgment and experience indicate is likely to result in a condition immediately hazardous to life or health (IHLH) for individuals using or depending on the compliant product. If an IHLH condition occurs, the user will sustain, or will be likely to sustain, an injury of a severity that could result in loss of life, significant bodily injury, or loss of bodily function, either immediately or at some point in the future.
(2) Major A: A product hazard, other than Critical, that is likely to result in failure to the degree that the compliant product does not provide any protection or reduces protection, and is not detectable to the user. The phrase "reduces protection" means the failure of specific protective design(s) or feature(s) that results in degradation of protection in advance of reasonable life expectancy to the point that continued use of the product is likely to cause physical harm to the user, or where continued degradation could lead to IHLH conditions.
(3) Major B: A product hazard, other than Critical or Major A, that is likely to result in reduced protection and is detectable to the user. The phrase "reduces protection" means the failure of specific protective design(s) or feature(s) that results in degradation of protection in advance of reasonable life expectancy to the point that continued use of the product is likely to cause physical harm to the user, or where continued degradation could lead to IHLH conditions.
(4) Minor: A product hazard, other than Critical, Major A, or Major B, that is not likely to materially reduce the usability of the compliant product for its intended purpose or a product hazard that is a departure from the established applicable standard and has little bearing on the effective use or operation of the compliant product for its intended purpose.

Where the facts are conclusive, based on characteristics of the hazard classified as indicated previously, the certification organization should consider initiating the following corrective actions with the authorized and responsible parties:

(1) Critical product hazard characteristics: product recall
(2) Major A product hazard characteristics: product recall or safety alert, depending on the nature of the specific product hazard
(3) Major B product hazard characteristics: safety alert or no action, depending on the nature of the specific product hazard
(4) Minor product hazard characteristic: no action

A.4.6.13 Reports, proposals, and proposed TIAs should be addressed to the technical committee that is responsible for the applicable standard and be sent in care of Standards Administration, NFPA, 1 Batterymarch Park, Quincy, MA 02169-7471.

A.5.1.1.8 When life safety rope is purchased, the authority having jurisdiction should ensure that the product label(s) with the information as specified in 5.1.1 and 5.2.1 is attached and remains with the rope until placed in service. When the product label is removed from the rope, the label should be retained in the authority's permanent rope records.

It is very important that the information on the product label(s) and the information required in 5.2.1 to be supplied by the manufacturer reach the persons who will actually be using the rope. It is useless for the supply personnel or equipment officer to remove the product label and other pertinent information and simply retain them in the rope record file. The persons who potentially will be using the rope need to be provided with all the information available. Copies of the product label(s) and other pertinent information should be maintained with the rope wherever the rope is in-service awaiting use so that the potential users can consult the information.

Copyright National Fire Protection Association
Provided by IHS under license with NFPA
No reproduction or networking permitted without license from IHS
Not for Resale

Where life safety or escape rope is purchased in long lengths and then cut by the end user agency to make several life safety ropes or escape ropes, the product label(s) should be photocopied or otherwise reproduced and attached to each life safety rope when it is sent into service. The end user(s) (in a fire department it probably would be a fire company) should keep the copy of the product label(s) and any other pertinent information for reference and have the product label and other information readily available so that they can be reviewed by all potential users whenever necessary.

Ropes can be damaged in use by high stresses, impact loading situations, abrasion, kinking, heat, and exposure to chemicals and other products.

Ropes should be inspected by a qualified person before and after every operation and carefully stored between each use. Records should provide a history of each rope and should call for regular inspection and replacement as necessary. Any rope that fails to pass inspection or has been impact-loaded should be destroyed immediately.

It is recommended that departments establish an inspection program and shelf-life criteria for their ropes based on the conditions and environments encountered in their respective operations.

The destruction of rope means that it should be removed from service and altered in such a manner that it could not mistakenly be used as a life safety rope. This could include disposal or removal of the label and cutting the rope into short lengths to be used for utility purposes.

A.5.1.1.13 Information could be added to the tape that applies to a particular rope, such as date of manufacture or any pertinent information useful to the purchaser.

A.5.1.2.1 When escape rope is purchased, the purchaser or the authority having jurisdiction should ensure that a product label with the information as specified in 5.1.2 and 5.2.2 is attached and remains with the rope until placed in service. This label should be retained either in the authority's rope records or with the user of the rope for reference.

Escape rope is intended *only for emergency self-rescue situations* and cannot be used for other rope rescue situations. Escape rope is designed for one use only and destroyed after any use.

Escape rope is intended to be carried by a fire fighter or other emergency services personnel, so that it will be available in unanticipated situations from which self-rescue using the rope is the only option. Therefore, the escape rope should be carefully stored and periodically inspected by a qualified person to ensure status and condition of the rope. During inspection, if there is any doubt as to the suitability of the escape rope for use, it should be destroyed immediately and replaced.

A.5.1.2.2 Information useful to the purchaser that applies to a particular rope could be added to the tape.

A.5.1.2.9 See A.5.1.1.8.

A.5.1.2.12 Information useful to the purchaser that applies to a particular rope could be added to the tape.

A.5.1.3.11 For calculating the "fit height," it will be assumed the wearer has a 1015 mm (40 in.) chest.

A.5.1.6.1 Throwlines that are provided to the potential user in water rescue throwbags should include proper instructions of use for the throwbag in accordance with ASTM F 1730, *Guide for Throwing a Water Rescue Throwbag*.

A.5.1.6.8 See A.5.1.1.8.

A.5.2.1.4(1) To avoid possible damage, and possible reduction and loss of strength of the life safety rope or harness, the manufacturer should be contacted prior to disinfecting or cleaning by a method not prescribed in the maintenance procedures and retirement criteria.

Generic inspection information for some types of life safety ropes can be found in ASTM F 1740, *Guide for Inspection of Nylon, Polyester and/or Nylon/Polyester Blend Kernmantle Rope*.

A.5.2.5.5 Many portable anchor auxiliary equipment devices (such as tripods) can be set up at several height or length adjustments. The strength rating of such devices can be different at each setting. As a minimum, the lowest strength set-up configuration of the device, as recommended by the manufacturer in the user instructions, should be tested and labeled on each device.

A.6.1.1 If a finish is applied to rope fiber during production, it should not interfere with safe usage of the rope due to excessive slipperiness; this characteristic should be evaluated by the purchasing organization before the rope is purchased.

A.6.2.1 See A.6.1.1.

A.6.3.2 The purchaser should ensure that proper sizes are available to accommodate on-duty personnel.

A.6.3.3 Many life safety harness and system components that meet the requirements of this standard might not interface effectively with all systems of use and all types of life safety rope. Evaluation should be done before purchase to ensure compatibility.

Load-bearing textile materials should have strength, aging, ultraviolet resistance, abrasion resistance, and heat and cold resistance characteristics equivalent or superior to polyamides.

A.6.3.4 Alternative methods for finishing and securing webbing ends can be hardware capping, tucking and sewing, and coating the webbing ends with an air-drying solvent base sealant.

A.6.3.5 To aid the visual inspection of thread, it is recommended that the manufacturer use a thread that is of contrasting color to the webbing.

A.6.4.2 See A.6.3.2.

A.6.4.3 See A.6.3.3.

A.6.4.4 See A.6.3.4.

A.6.4.5 See A.6.3.5.

A.6.5.2.2 It is recommended that rescue personnel use general use instead of light-use auxiliary equipment in any situations where unusual or extreme forces could be placed on the system.

A.6.5.2.3 See A.6.5.2.2.

A.6.5.5 Locking designs can include screw and spring collars that are designed to prevent gates from opening accidentally during use.

A.6.5.7 Alternative methods for finishing and securing webbing ends can be hardware capping, tucking and sewing, and coating the webbing ends with an air-drying solvent base sealant.

A.6.5.8 See A.6.3.5.

A.6.6.1 See A.6.1.1.

Copyright National Fire Protection Association
Provided by IHS under license with NFPA
No reproduction or networking permitted without license from IHS
Not for Resale

A.7.1 Even properly stored rope can lose strength over a period of time. Life safety ropes should be stored in a manner to avoid degradation from the environment. Examples of potentially damaging environmental factors include but are not limited to sunlight, fluorescent light, heat, exhaust fumes, battery acid, and fumes.

Any rope can be severely damaged and can fail when cut by a sharp edge or when subjected to abrasion over rough surfaces. Rope should be protected from such hazards with appropriate abrasion protection. Many constructions of rope that meet the requirements of this standard could pose difficulties with knotting or splicing easily or interfacing effectively with all systems of use and all types of life safety harness and associated equipment. Evaluation should be done by the fire department before purchase to ensure compatibility. Rope end terminations such as knots and splices should be made in accordance with the manufacturer's instructions.

A.7.1.1 Rope elongation is related to the amount of energy a rope can safely absorb when used to arrest a fall. For all ropes, and especially when impact loading of greater than a fall factor of 0.25, manufacturers should be consulted to ensure that rope with appropriate elongation and energy absorption is selected for each application.

A.7.1.2 See A.7.1.1.

A.7.1.3 Table A.7.1.3 shows comparisons of rope diameters to circumference in both millimeters and inches.

When selecting the size of rope to purchase, a systems approach should be considered. Evaluation should be done while wearing gloves with the selected ascender and descender auxiliary equipment before purchase to ensure the rope size works.

Table A.7.1.3 Comparison of Rope Diameter/ Circumference

Diameter in Decimal (mm) Nearest 0.5 mm	Diameter in Decimal (in.)	Diameter in Fraction (in.) nearest 1/64	Equivalent Circumference (in.)
7.5	0.295	19/64	0.93
8.0	0.313	5/16	0.98
8.5	0.335	11/32	1.05
9.0	0.354	23/64	1.11
9.5	0.376	3/8	1.18
10.0	0.394	25/64	1.24
10.5	0.413	13/32	1.30
11.0	0.433	7/16	1.36
11.5	0.453	29/64	1.42
12.0	0.472	15/32	1.48
12.5	0.492	1/2	1.55
13.0	0.513	33/64	1.61
13.5	0.531	17/32	1.67
14.0	0.551	35/64	1.73
14.5	0.570	18/32	1.79
15.0	0.590	19/32	1.85
15.5	0.610	39/64	1.92
16.0	0.630	5/8	1.98

A.7.1.4 See A.7.1.3.

A.7.1.5 The thermal requirement is intended to limit melting of rope, harness, and certain other system components due to friction caused by activities such as rappelling. The thermal requirement is NOT intended to qualify these items for use during fire-fighting operations or other operations where high temperature exposures are encountered.

Many life safety ropes have thermoplastic materials as all or part of their construction because of the material's excellent stretch and resilient properties. However, thermoplastic materials are not highly resistant to elevated temperatures and can lose strength at temperatures common during fire-fighting operations. If life safety rope is carried by fire fighters during fire-fighting operations, it should be shielded or protected from flame or high temperature exposures. Repeat exposures of the life safety rope to flame or high temperatures can cause degradation of the rope over time and could result in failure during use. Exposure of the life safety rope to flame or high temperatures during use can cause melting of thermoplastic materials of the rope and result in failure.

A.7.2 See A.7.1.

A.7.2.1 See A.7.1.1.

A.7.2.2 See A.7.1.3.

A.7.2.3 The thermal requirement is intended to limit melting of rope, harness, and certain other system components due to friction caused by activities such as rappelling. The thermal requirement is NOT intended to qualify these items for use during fire-fighting operations or other operations where high temperature exposures are encountered.

Many escape ropes have thermoplastic materials as all or part of their construction because of the material's excellent stretch and resilient properties. However, thermoplastic materials are not highly resistant to elevated temperatures and can lose strength at temperatures common during fire-fighting operations. If escape rope is carried by fire fighters during fire-fighting operations, it should be shielded or protected from flame or high temperature exposures and falling hot debris. The rope can be carried in the pocket of the protective coat or inside a thermally protective pouch or storage bag. Repeat exposures of the escape rope to flame or high temperatures can cause degradation of the rope over time and could result in failure during use. Exposure of the escape rope to flame or high temperatures during use can cause melting of thermoplastic materials of the rope and result in failure.

A.7.3.2 See A.7.1.3.

A.7.4.6 The thermal requirement is intended to limit melting of rope, harness, and certain other system components due to friction caused by activities such as rappelling. The thermal requirement is NOT intended to qualify these items for use during fire-fighting operations or other operations where high temperature exposures are encountered.

Many life safety harness have thermoplastic materials as all or part of their construction because of the material's excellent strength and resilient properties. However, thermoplastic materials are not highly resistant to elevated temperatures and can lose strength at temperatures common during fire-fighting operations. If life safety harness is carried or used by fire fighters during fire-fighting operations, it should be shielded or protected from flame or high temperature exposures. Repeat exposures of the life safety harness to flame or high temperatures can cause degradation

Copyright National Fire Protection Association
Provided by IHS under license with NFPA
No reproduction or networking permitted without license from IHS
Not for Resale

of the harness over time and could result in failure during use. Exposure of the life safety harness to flame or high temperatures during use can cause melting of thermoplastic materials of the harness and result in failure.

A.7.5.7.7 The thermal requirement is intended to limit melting of rope, harness, and certain other system components due to friction caused by activities such as rappelling. The thermal requirement is NOT intended to qualify these items for use during fire fighting operations or other operations where high temperature exposures are encountered.

Many auxiliary equipment software items have thermoplastic materials as all or part of the construction because of the materials' excellent strength and resilient properties. However, thermoplastic materials are not highly resistant to elevated temperatures and can lose strength at temperatures common during fire fighting operations. If auxiliary equipment software items are carried by fire fighters during fire fighting operations, they should be shielded or protected from flame or high temperature exposures. Repeat exposures of the auxiliary equipment software to flame or high temperatures can cause degradation of the item(s) over time and could result in failure during use. Exposure of the auxiliary equipment software to flame or high temperatures during use can cause melting of thermoplastic materials of the item(s) and result in failure.

A.7.5.8.4 See A.7.5.7.7

A.7.5.9 The thermal requirement is intended to limit melting of rope, harness, and certain other system components due to friction caused by activities such as rappelling. The thermal requirement is NOT intended to qualify these items for use during fire-fighting operations or other operations where high temperature exposures are encountered.

Many belts have thermoplastic materials as all or part of the construction because of the materials' excellent strength and resilient properties. However, thermoplastic materials are not highly resistant to elevated temperatures and can lose strength at temperatures common during fire-fighting operations. If belts are carried or used by fire fighters during fire-fighting operations, they should be shielded or protected from flame or high temperature exposures. Repeat exposures of belts to flame or high temperatures can cause degradation of the belt over time and could result in failure during use. Exposure of the belt to flame or high temperatures during use can cause melting of thermoplastic materials of the belt and result in failure.

A.8.2.4 NFPA 1983 does not preclude a variety of rope construction so long as the construction types meet the performance requirements of the standard. The title of CI 1801, *Low Stretch and Static Kernmantle Life Safety Rope*, indicates a particular type of rope construction; however, the elongation and breaking strength test methods contained in CI 1801 can be utilized for other types of rope construction.

The reference is not intended to limit the rope construction to the construction type mentioned in the title of CI 1801 or to any other single type of rope construction. The reference is only intended to refer to the testing methods for elongation and breaking strength specified in Sections 8 and 9 of CI 1801 for evaluating any rope construction type for compliance with NFPA 1983.

A.8.3.3.2 The intent is to test three samples of each model per test. At the manufacturer's discretion, a new, unused sample from one test series can be used for one or more of the other test series. For example, a sample used in harness test 8.3 can be used to conduct harness test 8.4, or a new unused sample can be used.

A.8.3.8.2 The 16 kN (3600 lbf) test value selected for this static test, which employs a rigid test torso, equates to having a dynamic force exerted on the body greatly exceeding that which is considered reasonable to survive.

A.8.3.9.2 See A.8.3.8.2.

A.8.3.10.2 The 16 kN (3600 lbf) test value selected for this static test, which employs a rigid test torso, equates to having a dynamic force exerted on the body greatly exceeding that which is considered reasonable to survive. The force selected for the head-down position is less than that selected for the upright position test because, in realistic emergency operations, a person falling head-first will impact the harness with less force in the head-down position, and then be inverted and arrested, thus producing the maximum force in the upright position.

A.8.3.11.2 A lesser force is used in this test than in the rescue harness test due to the personal protective application of belts. The indicated test force of 13 kN (2923 lbf) is compliant with the requirements for escape rope.

A.8.3.12.2 See 8.3.11.2.

A.8.4.3.2 See A.8.3.3.2.

A.8.5.6.1 The pin dimensions are specified within the referenced ASTM test method (F 1956).

A.8.7.4.1 In most cases, the portable anchor device will be weakest at its greatest (or highest) extension. However, many devices have multiple ways they can be used. Different rigging configurations may be stronger or weaker than others. It is intended that the testing be done in the configuration specified in the manufacturer's instructions to the user that would yield the lowest strength results. For example, anchor slings can be rigged in a basket, end to end or choker configuration. Each will likely yield different results. The MBS reported is for the weakest configuration allowed by the manufacturer's instructions.

A.8.7.5.1 See A.8.7.4.1.

A.8.7.6.8 Test pins are used to simulate the function of carabiners to connect various products together. The radius of the test pin, where it contacts the product being tested, should match a common size carabiner used in the fire service. The pin does not have to be round as it could be necessary to have a stronger pin than is available in round stock. Regardless, the face of the pin in contact with the product being tested should have the radius referenced in the test procedure. Wire rope can be used to simulate the function of rope as it applies to the function of the device. The diameter of the wire rope should be as close as possible to the largest diameter of rope with which the device is designed to work.

A.8.7.8.5 For example, portable anchors designed to be attached to flanged rims of vessel openings would require a test base to simulate the flanged portal to which the device is designed to be affixed.

A.8.7.11.2 AISI SAE Type 01 tool steel is commonly purchased as 01 Drill Rod.

A.8.11.6 The 16 kN (3600 lbf) test value selected for this static test, which employs a rigid test torso, equates to having a dynamic force exerted on the body greatly exceeding that which is considered reasonable to survive.

Copyright National Fire Protection Association
Provided by IHS under license with NFPA
No reproduction or networking permitted without license from IHS
Not for Resale

Annex B Informational References

B.1 Referenced Publications. The documents or portions thereof listed in this annex are referenced within the informational sections of this standard and are not part of the requirements of this document unless also listed in Chapter 2 for other reasons.

B.1.1 NFPA Publications. (Reserved)

B.1.2 Other Publications.

B.1.2.1 ASTM Publications. American Society for Testing and Materials, 100 Barr Harbor Drive, West Conshohocken, PA 19428-2959.

ASTM F 1730, *Guide for Throwing a Water Rescue Throwbag*, 1996.

ASTM F 1740, *Guide for Inspection of Nylon, Polyester and/or Nylon/Polyester Blend Kernmantle Rope*, 1996.

ASTM F 1956, *Standard Specification for Rescue Carabiners*, 1999.

B.1.2.2 Cordage Institute Publication. The Cordage Institute, 994 Old Eagle School, Wayne, PA 19087-1866.

CI 1801, *Low Stretch and Static Kernmantle Life Safety Rope*, 1998.

B.1.2.3 ISO Publications. International Standards Organization, 1 rue de Varembé, Case Postal 56, CH-1211 Geneve 20, Switzerland.

ISO Guide 27, *Guidelines for corrective action to be taken by a certification body in the event of misuse of its mark of conformity*, 1983.

ISO Guide 65, *General requirements for bodies operating product certification systems*, 1996.

B.1.2.4 U.S. Government Publications. U.S. Government Printing Office, Washington, DC 20402.

Title 21, Code of Federal Regulations, Subpart C.

Title 42, Code of Federal Regulations, Part 84.

B.2 Informational References. (Reserved)

B.3 References for Extracts in Informational Sections. (Reserved)

--`,,```,,,,````-`-`,,`,,`,`,,`---

Copyright National Fire Protection Association
Provided by IHS under license with NFPA
No reproduction or networking permitted without license from IHS

Not for Resale

Index

© 2006 National Fire Protection Association. All Rights Reserved.

The copyright in this index is separate and distinct from the copyright in the document that it indexes. The licensing provisions set forth for the document are not applicable to this index. This index may not be reproduced in whole or in part by any means without the express written permission of NFPA.

-A-

Adjusting devices
Definition 3.3.16.1
Life safety harnesses 7.4.1.1, 7.4.2.1, 7.4.3.1
Anchorage point, drop test 8.4.4.2, 8.4.6
Anchor straps ..... 5.1.5.12, 7.5.7, 8.7, 8.7.11, A.7.5.7.7, A.7.5.8.4, A.8.7.8.5 to A.8.7.11.2, A.8.7.11.2
Application of standard 1.3, A.1.3.4
Approved (definition) 3.2.1, A.3.2.1
Ascending devices
Definition 3.3.16.2, A.3.3.16.2
Manner of function tensile test 8.6
Manufactured systems 7.5.6.9
Performance requirements 7.6.2
Product label, specific requirements 5.1.5.2.5, 7.6.2.3
Attachment points .....*see also* Anchorage point; Load-bearing attachment point; Positioning attachment point
Performance requirements
Belts 7.5.1.1, 7.5.2.1
Life safety harnesses 7.4.1.3, 7.4.2.3, 7.4.3.3
Tests 8.3.10.3, 8.6.4.3.1, 8.11.4.4
Authority having jurisdiction (definition) 3.2.2, A.3.2.2
Auxiliary equipment .....*see also* Ascending devices; Carabiners; Descent control devices; Portable anchors; Rope grab devices; Snap-links
Compliance and information statements ..... 5.1.5.9 to 5.1.5.14
Definition 3.3.4
Design and construction requirements .... 6.5, A.6.5.2.2 to A.6.5.9
Melting point, of thread/fibers 7.5.8.4, A.7.5.8.4
Minimum breaking strength .....*see* Minimum breaking strength (MBS)
Performance requirements 7.6
Product labels 5.1.5, 7.5.7.5, 7.6.1.7, 7.6.2.3, 7.6.3.8, 7.6.4.5, 7.6.5.7, 8.7.11.7, 8.10
Tests
Breaking strength ..... 8.7, A.8.7.8.5 to A.8.7.11.2
Carabiner and snap-link tensile test 8.5, A.8.5.6.1
Manner of function tensile test 8.6
Product label durability 8.10
Use designation 6.5.2, A.6.5.2.2, A.6.5.2.3
Escape .....*see* Escape use auxiliary equipment
General use .....*see* General use
Light use .....*see* Light use
User information 5.2.5, A.5.2.5.5

-B-

Belts
Compliance and information statements 5.1.4.10, 5.1.4.11, 5.1.4.13, 5.1.4.14
Definition 3.3.5
Design and construction requirements ..... 6.4, A.6.4.2 to A.6.4.5
Escape belt 6.4.1.2
Definition 3.3.5.1, A.3.3.5.1
Tests ..... 8.3, 8.4, A.8.3.2.4 to A.8.3.12.2, A.8.3.3.1, A.8.4.3.2
Ladder belt 6.4.1.1, 6.4.6
Definition 3.3.5.2
Tests ..... 8.3, A.8.3.2.4 to A.8.3.12.2
Melting point 7.5.9, A.7.5.9
Performance requirements ..... 7.5, A.7.5.7.7 to A.7.5.9
Product labels 5.1.4, 7.5.4
Tests ..... 8.3, 8.4, 8.10, A.8.3.2.4 to A.8.3.12.2, A.8.3.3.1, A.8.4.3.2
User information 5.2.4
Block creel construction (rope) 6.1.2, 6.2.2, 6.6.2
Definition 3.3.50.1, A.3.3.50.1
Breaking and elongation testing 8.2
Breaking strength .....*see* Minimum breaking strength (MBS)
Buckles
Auxiliary equipment 6.5.4, 6.5.5
Belts 6.4.8, 6.4.9, 8.3.6.2, 8.3.7.2, 8.3.7.3
Definition 3.3.7
Life safety harnesses 6.3.8, 6.3.9, 7.4.1.1, 7.4.2.1, 7.4.3.1, 8.3.6.2, 8.3.7.2, 8.3.7.3

-C-

Carabiners
Definition 3.3.8
Design and construction requirements 6.5.6, A.6.5.6
Performance requirements 7.6.1
Tests 8.3.5.1, 8.7.8.3, A.8.5, A.8.5.6.1
Certification/certified ..... Chap. 4
Definition 3.3.9
Follow-up program 4.2.9, A.4.2.9
Manufacturer's quality assurance program 4.2.7, A.4.2.7.1
Recertification 4.3.3, 4.4
Testing program ..... 4.2.6, 4.2.9.2 to 4.2.9.4, 4.3, A.4.2.6
Certification organization ..... 4.1.3, 4.1.7 to 4.1.10, 4.2, A.4.1.7, A.4.1.8, A.4.2.1 to A.4.2.9
Contract with manufacturers 4.2.5, A.4.2.5
Definition 3.3.10
Hazards involving compliant product ..... 4.2.10, 4.6, A.4.6.1 to A.4.6.13
Compliant (definition) 3.3.11
Construction requirements .....*see* Design and construction requirements
Continuous filament fibers 6.1.3, 6.2.3, 6.3.3, 6.4.3, 6.6.3, A.6.3.3, A.6.4.3
Definition 3.3.24.1
Corrosion (definition) 3.3.13
Corrosion resistance
Performance requirements
Auxiliary equipment 7.5.5.8, 7.5.6.6, 7.5.7.6, 7.5.8.3, 7.6.1.8, 7.6.2.4, 7.6.3.9, 7.6.4.6
Belt 7.5.5
Life safety harness 7.4.5
Test 8.8

-D-

Definitions ..... Chap. 3
Descent control devices
Definition 3.3.16.3
Escape descent control devices 7.6.3.1, 7.6.3.2, 8.6.8.1
Definition 3.3.16.3.1
Manufactured systems 7.5.6.9
Performance requirements 7.6.3
Product label, specific requirements 5.1.5.2.5, 7.6.3.8
Tests
Manner of function tensile test 8.6
Passive brake holding test 8.11
Design and construction requirements ..... Chap. 6
Auxiliary components ..... 6.5, A.6.5.2.2 to A.6.5.9
Belts ..... 6.4, A.6.4.2 to A.6.4.5
Escape rope 6.2, A.6.1.1, A.6.2.1
Inspection 4.3.8, 4.3.15, 4.3.16

Copyright National Fire Protection Association
Provided by IHS under license with NFPA
No reproduction or networking permitted without license from IHS
Not for Resale

Life safety harness ..... 6.3, A.6.3.2 to A.6.3.5
Life safety rope 6.1, A.6.1.1
Throwlines 6.6, A.6.1.1, A.6.6.1
Design load
Auxiliary equipment 6.5.2.2, 6.5.2.3, A.6.5.2.2, A.6.5.2.3
Definition 3.3.35.1, A.3.3.35.1
Devices .....*see* Adjusting devices; Ascending devices; Descent control devices; Rope grab devices
Diameter (rope) 8.7.10.2
Auxiliary equipment 5.1.5.2.5
Definition 3.3.50.2
Escape rope 5.1.2.11, 7.2.2, A.7.1.3, A.7.2.2
Life safety rope 5.1.1.12, 7.1.3, 7.1.4, A.7.1.3, A.7.1.4
Throwlines 5.1.6.11
Drop tests 8.4, A.8.3.3.1, A.8.4.3.2

-E-

Electric current carrying capabilities 6.1.4
Elongation
Definition 3.3.18
Escape rope 7.2.1, 8.2, A.7.1.1, A.7.2.1
Life safety rope 7.1.1, 7.1.2, 8.2, A.7.1.1, A.7.1.2
Throwline ..... 8.2.
Escape (definition) 3.3.19
Escape belt .....*see* Belts
Escape descent control devices .....*see* Descent control devices
Escape rope .....*see also* Life safety rope
Compliance and information statements 5.1.2.8, 5.1.2.9, 5.1.2.12, 5.1.2.13, A.5.1.1.8, A.5.1.2.9, A.5.1.2.12
Definition 3.3.50.3
Design and construction requirements 6.2, A.6.1.1, A.6.2.1
Diameter 5.1.2.11, 7.2.2, A.7.1.3, A.7.2.2
Melting point 7.2.3, A.7.2.3
Minimum breaking strength .....*see* Minimum breaking strength (MBS)
Performance requirements 7.2, A.7.1, A.7.2
Product labels ..... 5.1.2, 7.2.4, 8.10, A.5.1.2.1 to A.5.1.2.12
Tests
Product label durability 8.10
Rope breaking and elongation 8.2
User information 5.2.2
Escape use auxiliary equipment 5.1.5.2.4, 6.5.2, A.6.5.2.2, A.6.5.2.3
Descent control devices .....*see* Descent control devices

-F-

Fall factors (definition) 3.3.23, A.1.3.4, A.3.3.23
Fibers .....*see* Continuous filament fibers; Virgin fiber
Follow-up program 4.2.9, 4.4.2, A.4.2.9
Definition 3.3.25

-G-

Gates .....*see* Carabiners; Snap-links
General use
Auxiliary equipment ... 5.1.5.2.4, 6.5.2, 7.5.8.2, A.6.5.2.2, A.6.5.2.3
Anchor, rigging and pick-off straps ..... 8.7.11.6 to 8.7.11.8
Ascending devices 7.6.2.2, 8.6.7.2
Carabiners and snap-links ..... 7.6.1.4 to 7.6.1.6
Descent control devices 7.6.3.5, 7.6.3.6, 8.6.8.1
Rope grab devices 6.5.2.4, 7.6.2.2, 8.6.7.2
Definition 3.3.26
Life safety rope 7.1.2, 7.1.4, A.7.1.1, A.7.1.2, A.7.1.3, A.7.1.4

-H-

Hardware 6.5.3
Corrosion resistance .....*see* Corrosion
Definition 3.3.27
Product labels 5.1.5.2
Harness .....*see* Life safety harnesses
Hazards involving compliant product ..... 4.2.10, 4.6, A.4.6.1 to A.4.6.13

-I-

Identification tape .....*see* Product labels
Impact load (definition) 3.3.35.2, A.3.3.35.2
Inspection
For certification 4.3
Follow-up program 4.2.9, 4.4.2, A.4.2.9
Definition 3.3.25
Recertification 4.4.1.1, 4.4.3, 4.4.4
Use information
Auxiliary equipment ..... 5.2.5.2(1)
Belt ..... 5.2.4.2(1)
Escape rope ..... 5.2.2.1, 5.2.2.2(2)
Life safety harness ..... 5.2.3.2(1)
Life safety rope ..... 5.2.1.1, 5.2.1.2(5), 5.2.1.4(1), A.5.2.1.4(1)

-L-

Labeled (definition) 3.2.3
Ladder belt .....*see* Belts
Life safety harnesses
Compliance and information statements 5.1.3.10, 5.1.3.11, 5.1.3.13, 5.1.3.14, A.5.1.3.11
Definition 3.3.31
Design and construction requirements ..... 6.3, A.6.3.2 to A.6.3.5
Manufactured systems 7.5.6.7
Melting point 7.4.6, A.7.4.6
Performance requirements 7.4, A.7.4.6
Product labels 5.1.3, 7.4.4, A.5.1.3.11
Tests
Drop test 8.4
Product label durability 8.10
Static test ..... 8.3, A.8.3.2.4 to A.8.3.12.2
User information 5.2.3
Life safety rope .....*see also* Escape rope
Compliance and information statements 5.1.1.8, 5.1.1.10, 5.1.1.13, 5.1.1.14, A.5.1.1.8, A.5.1.1.13
Definition 3.3.50.4
Design and construction requirements 6.1, A.6.1.1
Diameter 5.1.1.12, 7.1.3, 7.1.4, A.7.1.3, A.7.1.4
Melting point 7.1.5, A.7.1.5
Minimum breaking strength .....*see* Minimum breaking strength (MBS)
Performance requirements 7.1, A.7.1
Product labels 5.1.1, 7.1.6, A.5.1.1.8, A.5.1.1.13, A.7.1.6
Tests
Manner of function tensile test 8.6.4.2, 8.6.4.3.1, 8.6.4.3.3, 8.6.4.4.3, 8.6.8.2
Passive brake holding test, descent control devices ..... 8.11.4.1 to 8.11.4.4, 8.11.4.5.1
Rope breaking and elongation test 8.2
User information ..... 5.2.1, A.5.2.1.4(1)
Light use
Auxiliary equipment ... 5.1.5.2.4, 6.5.2, 7.5.8.1, A.6.5.2.2, A.6.5.2.3
Anchor, rigging and pick-off straps ..... 8.7.11.6 to 8.7.11.8
Ascending devices 7.6.2.1, 8.6.7.1
Carabiners and snap-links ..... 7.6.1.1 to 7.6.1.3
Descent control devices 7.6.3.3, 7.6.3.4, 8.6.8.1
Rope grab devices 7.6.2.1, 8.6.7.1
Definition 3.3.33
Life safety rope 7.1.1, 7.1.3, A.7.1.1, A.7.1.3
Line (definition) 3.3.50.5
Listed (definition) 3.2.4, A.3.2.4
Load
Design load .....*see* Design load
Impact load (definition) 3.3.35.2
Proof load (definition) 3.3.35.3, A.3.3.35.3
Load-bearing attachment point
Definition 3.3.3.1, A.3.3.3.1

Copyright National Fire Protection Association
Provided by IHS under license with NFPA
No reproduction or networking permitted without license from IHS
Not for Resale

Drop tests .... 8.4.4.3, 8.4.5.2 to 8.4.5.4, 8.4.8.3, 8.4.9.3.1, 8.4.9.3.2
Minimum breaking strength test
Auxiliary equipment systems, components, and manufactured systems 8.7.10.3, 8.7.10.4
Portable anchors 8.7.8.2, 8.7.8.3
Static tests 8.3.5.1, 8.3.5.3
Load-bearing connectors (definition) ..... 3.3.37; *see also* Carabiners; Rings; Snap-links

-M-

Manufactured systems
Definition 3.3.39
Performance requirements 7.5.6
Product labels 7.5.6.5
Tests ..... 8.6.7, 8.7, A.8.7.8.5 to A.8.7.11.2
Manufacturers .....*see also* Follow-up program
Certification organization, role in 4.2.1, A.4.2.1
Compliance with standard 4.1.4, 4.2.5
Contract with certification organization 4.2.5, A.4.2.5
Definition 3.3.40
Investigation of complaints and returns 4.6.8, 4.7
Product recall 4.2.7.1, 4.8, A.4.2.7.1
Quality assurance program 4.2.7, A.4.2.7.1
Recertification 4.3.3, 4.4
Safety alert system 4.8
Testing program requirements 4.3.3, 4.3.10
User information provided by ..... 5.2, A.5.2.1.4(1), A.5.2.5.5
Manufacturer's lot (definition) 3.3.38.1
Manufacturer's Quality Assurance Program 4.5, A.4.5.5, A.5.5.4
Measurement, units of 1.4
Melt (definition) 3.3.42
Melting point, of threads/fibers
Auxiliary equipment 7.5.7.7, 7.5.8.4, A.7.5.7.7, A.7.5.8.4
Belts 7.5.9, A.7.5.9
Escape rope 7.2.3, A.7.2.3
Life safety harness 7.4.6, A.7.4.6
Life safety rope 7.1.5, A.7.1.5
Minimum breaking strength (MBS)
Auxiliary equipment 5.1.5.2.3, 7.5.8.1, 7.5.8.2
Ascending, rope grab, and descent control devices 8.6.5.2, 8.6.5.3.1
Carabiners and snap-links .... 7.6.1.1 to 7.6.1.6, A.8.5, A.8.5.6.1
Descent control devices 7.6.3.2, 7.6.3.4, 7.6.3.6
Manufactured systems and other equipment ..... 8.7, A.8.7.8.5 to A.8.7.11.2
Pick-off, anchor, and rigging straps ..... 5.1.5.12, 8.7, A.8.7.8.5 to A.8.7.11.2
Portable anchors ..... 5.1.5.11, 5.2.5.5, 7.6.4.3, 7.6.4.4, 8.7, A.5.2.5.5, A.8.7.8.5 to A.8.7.11.2
Pulleys ..... 7.6.5.1 to 7.6.5.6
Definition 3.3.43
Manufactured systems ..... 7.5.6.1 to 7.5.6.4, 7.5.6.8
Rope
Escape rope 5.1.2.10, 7.2.1, 8.2, A.7.1.1, A.7.2.1
Life safety rope 5.1.1.11, 7.1.1, 7.1.2, 8.2, A.7.1.1, A.7.1.2
Throwlines 5.1.6.10, 8.2.7.1
Straps, pick-off, rigging, and anchor ..... 7.5.7.1 to 7.5.7.4
Tests
Breaking strength ..... 8.7, A.8.7.8.5 to A.8.7.11.2
Manner of function tensile test 8.6.5.2, 8.6.5.3
Rope breaking and elongation test ..... 8.2.4, 8.2.5.1 to 8.2.5.3, 8.2.6, 8.2.7, A.8.2.4

-P-

Passive brake
Holding test 8.11
Performance requirements 7.6.3.7
Performance requirements ..... Chap. 7
Auxiliary equipment 7.6
Belt systems ..... 7.5, A.7.5.7.7 to A.7.5.9
Escape rope 7.2, A.7.1, A.7.2
Life safety harnesses 7.4, A.7.4.6
Life safety rope 7.1, A.7.1
Manufactured systems 7.5.6
Manufacturer's Quality Assurance Program ... 4.5, A.4.5.5, A.5.5.4
Pulley system components 7.6.5
Throwlines 7.3, A.7.1.3, A.7.3.2
Personal escape use auxiliary equipment .....*see* Escape use auxiliary equipment
Pick-off straps ..... 7.5.7, 8.7, 8.7.11, A.7.5.7.7, A.7.5.8.4, A.8.7.8.5 to A.8.7.11.2, A.8.7.11.2
Portable anchors
Definition 3.3.44, A.3.3.44
Performance requirements 7.6.4
Product label, specific requirements 5.1.5.2.5, 7.6.4.5
Tests ..... 8.7, 8.7.8, A.8.7.8.5, A.8.7.8.5 to A.8.7.11.2
User information 5.2.5.5, A.5.2.5.5
Positioning attachment point
Definition 3.3.3.2, A.3.3.3.2
Static test 8.3.13.1, 8.3.13.2
Production lot (definition) 3.3.38.2
Product labels ..... 5.1, A.5.1.1.8 to A.5.1.6.8
Auxiliary equipment 5.1.5, 7.5.7.5, 7.5.8.5, 7.6.1.7, 7.6.2.3, 7.6.3.8, 7.6.4.5, 7.6.5.7, 8.7.11.7
Belts 5.1.4, 7.5.4
Certification requirements ..... 4.1.2, 4.1.5 to 4.1.7, 4.1.9, 4.1.10, 4.2.12, A.4.1.7
Definition 3.3.46, A.3.3.46
Inspection 4.3.5, 4.3.6
Life safety harnesses 5.1.3, 7.4.4, A.5.1.3.11
Manufactured systems 7.5.6.5
Performance requirements 7.1.6, 7.2.4, 7.4.4, 7.5.4
Retention by user ..... 5.2.1.4(5), 5.2.2.2(6)
Rope
Escape rope ..... 5.1.2, 7.2.4, 8.10, A.5.1.2.1 to A.5.1.2.12
Life safety rope 5.1.1, 7.1.6, A.5.1.1.8, A.5.1.1.13
Throwlines 5.1.6, 7.3.4, A.5.1.1.8, A.5.1.6.1.1, A.5.1.6.8
Test, durability 8.10
Abrasion durability test 8.10.4.1, 8.10.8
Laundering durability test 8.10.4.2, 8.10.7
Product recall 4.2.7.1, 4.8, A.4.2.7.1
Proof load (definition) 3.3.35.3, A.3.3.35.3
Pulleys
Breaking strength test 8.7.1.3, 8.7.9
Performance requirements 7.6.5
Purpose of standard 1.2, A.1.2.1

-R-

Recertification 4.3.3, 4.4
References ..... Chap. 2, Annex B
Rigging straps ..... 5.1.5.12, 7.5.7, 8.7, 8.7.11, A.7.5.7.7, A.7.5.8.4, A.8.7.8.5 to A.8.7.11.2, A.8.7.11.2
Rings
Definition 3.3.49
Performance requirements
Belts 7.5.1.1, 7.5.2.1
Life safety harnesses 7.4.1.3, 7.4.2.3, 7.4.3.3
Tests
Static test 8.3.5.4, 8.3.13.1, 8.3.13.2
Rope .....*see also* Escape rope; Life safety rope
Definition 3.3.50
Tests 8.7.8.6.2, 8.7.10.2, 8.10, 8.10.7
Rope grab devices
Definition 3.3.16.4
General-use 6.5.2.4, 7.6.2.2, 8.6.7.2
Light-use 6.5.2.4, 7.6.2.1, 8.6.7.1
Manufactured systems 7.5.6.9
Performance requirements 7.6.2
Product label, specific requirements 5.1.5.2.5, 7.6.2.3
Tests 8.6, 8.7.8.6.2

Copyright National Fire Protection Association
Provided by IHS under license with NFPA
No reproduction or networking permitted without license from IHS
Not for Resale

-S-

Safety alert system 4.8
Samples .....*see also* Test methods
Definition 3.3.52
Representative product, cut from 4.3.9.2
Test preparation methods 8.1
Breaking strength test 8.7.2
Carabiner and snap-link tensile test 8.5.2
Corrosion resistance test 8.8.2
Drop test 8.4.2
Floatability test 8.9.2
Manner of function tensile test 8.6.2
Passive brake holding test 8.11.2
Product label durability 8.10.2
Rope breaking and elongation test 8.2.2
Static test 8.3.2, A.8.3.2.4
Scope of standard 1.1, A.1.1.6
Self-destructive action (definition) 3.3.53
Self-rescue equipment .....*see* Escape use auxiliary equipment
Shall (definition) 3.2.5
Should (definition) 3.2.6
Snap-links
Definition 3.3.54
Design and construction requirements 6.5.6, A.6.5.6
Performance requirements 7.6.1
Tests A.8.5, A.8.5.6.1
Software (definition) 3.3.55
Specimens ..... 4.3.9.1, 4.3.13, 8.1.2.2; *see also* Test methods
Breaking strength test 8.7.3
Carabiner and snap-link tensile test 8.5.3
Corrosion resistance test 8.8.3
Definition 3.3.56
Drop test 8.4.3
Floatability test 8.9.3
Manner of function tensile test 8.6.3
Passive braking test 8.11.3
Product label durability 8.10.3
Rope breaking and elongation test 8.2.3, 8.2.4, 8.2.6.2, A.8.2.4
Static test 8.3.3, A.8.3.3.2
Standard (definition) 3.2.7
Standard deviation (definition) 3.3.57, A.3.3.57
Static tests ..... 8.3, A.8.3.2.4 to A.8.3.12.2
Straps .....*see* Anchor straps; Pick-off straps; Rigging straps

-T-

Test, for certification ..... 4.2.6, 4.3, A.4.2.6; *see also* Test methods
Follow-up program ..... 4.2.9.2 to 4.2.9.4
Recertification 4.4.3, 4.4.4
Test lanyards 8.4.4.3, 8.4.5.2
Test methods ..... 8.2, Chap. 8; *see also* Performance requirements
Breaking and elongation testing 8.2
Breaking strength test ..... 8.7, A.8.7.8.5 to A.8.7.11.2
Carabiner and snap-link tensile test A.8.5, A.8.5.6.1
Corrosion resistance 8.8
Drop tests 8.4
Floatability test 8.9
Manner of function tensile test 8.6
Passive brake holding test, descent control devices 8.11
Product label durability 8.10
Abrasion durability test 8.10.4.1, 8.10.8
Laundering durability test 8.10.4.2, 8.10.7
Room temperature sample conditioning procedure 8.1.2
Rope breaking and elongation test 8.2
Sample preparation procedures .....*see* Samples
Static test ..... 8.3, A.8.3.2.4 to A.8.3.12.2
Throwlines
Compliance and information statements 5.1.6.8, 5.1.6.9, 5.1.6.12, 5.1.6.13, A.5.1.1.8, A.5.1.6.8
Definition 3.3.50.5.1
Design and construction requirements 6.6, A.6.1.1, A.6.6.1
Performance requirements 7.3, A.7.1.3, A.7.3.2
Product labels ... 5.1.6, 7.3.4, 8.10, A.5.1.1.8, A.5.1.6.1.1, A.5.1.6.8
Tests
Floatability 8.9
Product label durability 8.10, 8.10.1.2, 8.10.3.1, 8.10.7
Rope breaking and elongation test 8.2
User information 5.2.6

-U-

Units of measurement 1.4
User information ... 4.3.7, 5.2, A.5.2.1.4(1), A.5.2.5.5; *see also* Product labels

-V-

Virgin fiber 6.1.1, 6.2.1, 6.3.3, 6.4.3, 6.6.1, A.6.1.1, A.6.2.1, A.6.3.3, A.6.4.3, A.6.6.1
Definition 3.3.24.2

-W-

Waist (definition) 3.3.60
Webbing
Auxiliary equipment 6.5.7, 6.5.8
Belt systems 6.4.4, A.6.3.4, A.6.4.4
Definition 3.3.61
Life safety harnesses 6.3.4, A.6.3.4
Portable anchors 8.7.8.6.2

Copyright National Fire Protection Association
Provided by IHS under license with NFPA
No reproduction or networking permitted without license from IHS
Not for Resale

Sequence of Events Leading to Issuance of an NFPA Committee Document

Step 1: Call for Proposals

- Proposed new Document or new edition of an existing Document is entered into one of two yearly revision cycles, and a Call for Proposals is published.

Step 2: Report on Proposals (ROP)

- Committee meets to act on Proposals, to develop its own Proposals, and to prepare its Report.
- Committee votes by written ballot on Proposals. If two-thirds approve, Report goes forward. Lacking two-thirds approval, Report returns to Committee.
- Report on Proposals (ROP) is published for public review and comment.

Step 3: Report on Comments (ROC)

- Committee meets to act on Public Comments to develop its own Comments, and to prepare its report.
- Committee votes by written ballot on Comments. If two-thirds approve, Report goes forward. Lacking two-thirds approval, Report returns to Committee.
- Report on Comments (ROC) is published for public review.

Step 4: Technical Report Session

- "*Notices of intent to make a motion"* are filed, are reviewed, and valid motions are certified for presentation at the Technical Report Session. ("Consent Documents" that have no certified motions bypass the Technical Report Session and proceed to the Standards Council for issuance.)
- NFPA membership meets each June at the Annual Meeting Technical Report Session and acts on Technical Committee Reports (ROP and ROC) for Documents with "certified amending motions."
- Committee(s) vote on any amendments to Report approved at NFPA Annual Membership Meeting.

Step 5: Standards Council Issuance

- Notification of intent to file an appeal to the Standards Council on Association action must be filed within 20 days of the NFPA Annual Membership Meeting.
- Standards Council decides, based on all evidence, whether or not to issue Document or to take other action, including hearing any appeals.

Committee Membership Classifications

The following classifications apply to Technical Committee members and represent their principal interest in the activity of the committee.

M *Manufacturer:* A representative of a maker or marketer of a product, assembly, or system, or portion thereof, that is affected by the standard.

U *User:* A representative of an entity that is subject to the provisions of the standard or that voluntarily uses the standard.

I/M *Installer/Maintainer:* A representative of an entity that is in the business of installing or maintaining a product, assembly, or system affected by the standard.

L *Labor:* A labor representative or employee concerned with safety in the workplace.

R/T *Applied Research/Testing Laboratory:* A representative of an independent testing laboratory or independent applied research organization that promulgates and/or enforces standards.

E *Enforcing Authority:* A representative of an agency or an organization that promulgates and/or enforces standards.

I *Insurance:* A representative of an insurance company, broker, agent, bureau, or inspection agency.

C *Consumer:* A person who is, or represents, the ultimate purchaser of a product, system, or service affected by the standard, but who is not included in the *User* classification.

SE *Special Expert:* A person not representing any of the previous classifications, but who has a special expertise in the scope of the standard or portion thereof.

NOTES;
1. "Standard" connotes code, standard, recommended practice, or guide.
2. A representative includes an employee.
3. While these classifications will be used by the Standards Council to achieve a balance for Technical Committees, the Standards Council may determine that new classifications of members or unique interests need representation in order to foster the best possible committee deliberations on any project. In this connection, the Standards Council may make appointments as it deems appropriate in the public interest, such as the classification of "Utilities" in the National Electrical Code Committee.
4. Representatives of subsidiaries of any group are generally considered to have the same classification as the parent organization.

--`,,```,,,,````-`-`,,`,,`,`,,`---

Copyright National Fire Protection Association
Provided by IHS under license with NFPA
No reproduction or networking permitted without license from IHS
Not for Resale

NFPA Technical Committee Document Proposal Form

Note: All proposals must be received by 5:00 p.m. EST/EDST on the published proposal closing date.

For further information on the standards-making process, please contact Codes and Standards Administration at 617-984-7249. For technical assistance, please call NFPA at 617-770-3000.

FOR OFFICE USE ONLY
Log #: _____
Date Rec'd: _____

Please indicate in which format you wish to receive your ROP/ROC: ☐ **CD ROM** ☐ **paper** ☐ **download**
(Note: In choosing the download option you intend to view the ROP/ROC from our Website. No copy will be sent to you.)

Date 12/18/02 **Name** John B. Smith **Telephone** 617-555-1212
Company _____
Address 9 Seattle St. **City** Seattle **State** WA **Zip** 02255
Please indicate organization represented (if any) Fire Marshals Assn. of North America

1. **a) NFPA Document Title** National Fire Alarm Code
   b) NFPA No. & Edition NFPA 72, 2002 ed. **c) Section/Paragraph** 4.4.7.1.1

2. **Proposal Recommends:** *(check one)* ☐ **new text** ☐ **revised text** ☒ **deleted text**

3. **Proposal.** *(Include proposed new or revised wording, or identification of wording to be deleted.)* Note: Proposed text should be in legislative format, that is, use underscore to denote wording to be inserted (inserted wording) and strike-through to denote wording to be deleted (~~deleted wording~~). Delete exception.

4. **Statement of Problem and Substantiation for Proposal.** Note: State the problem that will be resolved by your recommendation. Give the specific reason for your proposal including copies of tests, research papers, fire experience, etc. If more than 200 words, it may be abstracted for publication. A properly installed and maintained system should be free of ground faults. The occurrence of one or more ground faults should be required to cause a "trouble" signal because it indicates a condition that could contribute to future malfunction of the system. Ground fault protection has been widely available on these systems for years and its cost is negligible. Requiring it on all systems will promote better installations, maintenance and reliability.

5. ☒ **This Proposal is Original Material.** Note: Original material is considered to be the submitter's own idea based on or as a result of his/her own experience, thought, or research and, to the best of his/her knowledge, is not copied from another source.

   ☐ **This Proposal is Not Original Material; Its Source** ***(if known)*** **is as Follows:** _____

Sample

I hereby grant the NFPA all and full rights in copyright to this proposal, and I understand that I acquire no rights in any publication of NFPA in which this proposal in this or another similar or analogous form is used.

Signature ***(Required)*** John B. Smith

PLEASE USE SEPARATE FORM FOR EACH PROPOSAL • NFPA FAX (617) 770-3500

Mail to: Secretary, Standards Council • NFPA • 1 Batterymarch Park • PO Box 9101 • Quincy, MA 02269-9101

Copyright National Fire Protection Association
Provided by IHS under license with NFPA
No reproduction or networking permitted without license from IHS
Not for Resale

NFPA Technical Committee Document Proposal Form

Note: All proposals must be received by 5:00 p.m. EST/EDST on the published proposal closing date.

For further information on the standards-making process, please contact Codes and Standards Administration at 617-984-7249. For technical assistance, please call NFPA at 617-770-3000.

FOR OFFICE USE ONLY
Log #: _____
Date Rec'd: _____

Please indicate in which format you wish to receive your ROP/ROC: ☐ **CD ROM** ☐ **paper** ☐ **download**
(Note: In choosing the download option you intend to view the ROP/ROC from our Website. No copy will be sent to you.)

Date _____ **Name** _____ **Telephone** _____
Company _____
Address _____ **City** _____ **State** _____ **Zip** _____
Please indicate organization represented (if any) _____

1. **a) NFPA Document Title** _____
   b) NFPA No. & Edition _____ **c) Section/Paragraph** _____

2. **Proposal Recommends:** *(check one)* ☐ **new text** ☐ **revised text** ☐ **deleted text**

3. **Proposal.** *(Include proposed new or revised wording, or identification of wording to be deleted.)* Note: Proposed text should be in legislative format, that is, use underscore to denote wording to be inserted (inserted wording) and strike-through to denote wording to be deleted (~~deleted wording~~). _____

4. **Statement of Problem and Substantiation for Proposal.** Note: State the problem that will be resolved by your recommendation. Give the specific reason for your proposal including copies of tests, research papers, fire experience, etc. If more than 200 words, it may be abstracted for publication. _____

5. ☐ **This Proposal is Original Material.** Note: Original material is considered to be the submitter's own idea based on or as a result of his/her own experience, thought, or research and, to the best of his/her knowledge, is not copied from another source.

   ☐ **This Proposal is Not Original Material; Its Source *(if known)* is as Follows:** _____

I hereby grant the NFPA all and full rights in copyright to this proposal, and I understand that I acquire no rights in any publication of NFPA in which this proposal in this or another similar or analogous form is used.

Signature *(Required)* _____

PLEASE USE SEPARATE FORM FOR EACH PROPOSAL • NFPA FAX (617) 770-3500

Mail to: Secretary, Standards Council • NFPA • 1 Batterymarch Park • PO Box 9101 • Quincy, MA 02269-9101

Copyright National Fire Protection Association
Provided by IHS under license with NFPA
No reproduction or networking permitted without license from IHS
Not for Resale