NFPA 1982

Standard on Personal Alert Safety Systems (PASS)

2007 Edition

NFPA, 1 Batterymarch Park, Quincy, MA 02169-7471
An International Codes and Standards Organization

Copyright National Fire Protection Association
Provided by IHS under license with NFPA
No reproduction or networking permitted without license from IHS

Not for Resale

IMPORTANT NOTICES AND DISCLAIMERS CONCERNING NFPA DOCUMENTS

NOTICE AND DISCLAIMER OF LIABILITY CONCERNING THE USE OF NFPA DOCUMENTS

NFPA codes, standards, recommended practices, and guides, of which the document contained herein is one, are developed through a consensus standards development process approved by the American National Standards Institute. This process brings together volunteers representing varied viewpoints and interests to achieve consensus on fire and other safety issues. While the NFPA administers the process and establishes rules to promote fairness in the development of consensus, it does not independently test, evaluate, or verify the accuracy of any information or the soundness of any judgments contained in its codes and standards.

The NFPA disclaims liability for any personal injury, property or other damages of any nature whatsoever, whether special, indirect, consequential or compensatory, directly or indirectly resulting from the publication, use of, or reliance on this document. The NFPA also makes no guaranty or warranty as to the accuracy or completeness of any information published herein.

In issuing and making this document available, the NFPA is not undertaking to render professional or other services for or on behalf of any person or entity. Nor is the NFPA undertaking to perform any duty owed by any person or entity to someone else. Anyone using this document should rely on his or her own independent judgment or, as appropriate, seek the advice of a competent professional in determining the exercise of reasonable care in any given circumstances.

The NFPA has no power, nor does it undertake, to police or enforce compliance with the contents of this document. Nor does the NFPA list, certify, test or inspect products, designs, or installations for compliance with this document. Any certification or other statement of compliance with the requirements of this document shall not be attributable to the NFPA and is solely the responsibility of the certifier or maker of the statement.

Copyright National Fire Protection Association
Provided by IHS under license with NFPA
No reproduction or networking permitted without license from IHS
Not for Resale

ADDITIONAL NOTICES AND DISCLAIMERS

Updating of NFPA Documents

Users of NFPA codes, standards, recommended practices, and guides should be aware that these documents may be superseded at any time by the issuance of new editions or may be amended from time to time through the issuance of Tentative Interim Amendments. An official NFPA document at any point in time consists of the current edition of the document together with any Tentative Interim Amendments and any Errata then in effect. In order to determine whether a given document is the current edition and whether it has been amended through the issuance of Tentative Interim Amendments or corrected through the issuance of Errata, consult appropriate NFPA publications such as the National Fire Codes® Subscription Service, visit the NFPA website at www.nfpa.org, or contact the NFPA at the address listed below.

Interpretations of NFPA Documents

A statement, written or oral, that is not processed in accordance with Section 6 of the Regulations Governing Committee Projects shall not be considered the official position of NFPA or any of its Committees and shall not be considered to be, nor be relied upon as, a Formal Interpretation.

Patents

The NFPA does not take any position with respect to the validity of any patent rights asserted in connection with any items which are mentioned in or are the subject of NFPA codes, standards, recommended practices, and guides, and the NFPA disclaims liability for the infringement of any patent resulting from the use of or reliance on these documents. Users of these documents are expressly advised that determination of the validity of any such patent rights, and the risk of infringement of such rights, is entirely their own responsibility.

NFPA adheres to applicable policies of the American National Standards Institute with respect to patents. For further information contact the NFPA at the address listed below.

Law and Regulations

Users of these documents should consult applicable federal, state, and local laws and regulations. NFPA does not, by the publication of its codes, standards, recommended practices, and guides, intend to urge action that is not in compliance with applicable laws, and these documents may not be construed as doing so.

Copyrights

This document is copyrighted by the NFPA. It is made available for a wide variety of both public and private uses. These include both use, by reference, in laws and regulations, and use in private self-regulation, standardization, and the promotion of safe practices and methods. By making this document available for use and adoption by public authorities and private users, the NFPA does not waive any rights in copyright to this document.

Use of NFPA documents for regulatory purposes should be accomplished through adoption by reference. The term “adoption by reference” means the citing of title, edition, and publishing information only. Any deletions, additions, and changes desired by the adopting authority should be noted separately in the adopting instrument. In order to assist NFPA in following the uses made of its documents, adopting authorities are requested to notify the NFPA (Attention: Secretary, Standards Council) in writing of such use. For technical assistance and questions concerning adoption of NFPA documents, contact NFPA at the address below.

For Further Information

All questions or other communications relating to NFPA codes, standards, recommended practices, and guides and all requests for information on NFPA procedures governing its codes and standards development process, including information on the procedures for requesting Formal Interpretations, for proposing Tentative Interim Amendments, and for proposing revisions to NFPA documents during regular revision cycles, should be sent to NFPA headquarters, addressed to the attention of the Secretary, Standards Council, NFPA, 1 Batterymarch Park, P.O. Box 9101, Quincy, MA 02269-9101.

For more information about NFPA, visit the NFPA website at www.nfpa.org.

Copyright National Fire Protection Association
Provided by IHS under license with NFPA
No reproduction or networking permitted without license from IHS
Not for Resale

Copyright © 2007 National Fire Protection Association. All Rights Reserved.

NFPA 1982

Standard on

Personal Alert Safety Systems (PASS)

2007 Edition

This edition of NFPA 1982, *Standard on Personal Alert Safety Systems (PASS)*, was prepared by the Technical Committee on Electronic Safety Equipment and released by the Technical Correlating Committee on Fire and Emergency Services Protective Clothing and Equipment. It was issued by the Standards Council on December 1, 2006, with an effective date of December 20, 2006, and supersedes all previous editions.

This edition of NFPA 1982 was approved as an American National Standard on December 20, 2006.

Origin and Development of NFPA 1982

The Technical Committee on Protective Equipment for Fire Fighters began work on this standard in 1980 in answer to requests from the fire service to establish requirements for a device that would sound an audible signal for aid if a fire fighter became incapacitated while operating at an emergency. The International Association of Fire Fighters (IAFF) was instrumental in the developmental work that resulted in this standard. Developmental work was completed in the spring of 1982 and submitted to the NFPA for official adoption. The first edition was presented at the Annual Meeting in Kansas City, MO, and released on 9 June 1983.

Between the first and second editions, the name of the technical committee was changed to the Technical Committee on Fire Service Protective Clothing and Equipment, and the Subcommittee on Personal Alert Safety System (PASS) was organized to manage this document. The second edition was presented to the membership of the Association at the 1988 Annual Meeting in Los Angeles, CA, and had an effective date of 28 June 1988.

For the third edition, the Subcommittee on PASS undertook a complete revision of their work, which was completed in December 1991. The document was passed onto the Technical Committee on Fire Service Protective Clothing and Equipment and was presented to the membership of the Association at the 1993 Annual Meeting in Orlando, FL, and was issued with an effective date of 20 August 1993.

In January 1995, the Standards Council reorganized the entire project for fire service protective clothing and equipment. The new project has a Technical Correlating Committee on Fire and Emergency Services Protective Clothing and Equipment and seven technical committees operating within the Project. The former standing Subcommittee on PASS was combined with the Subcommittee on SCBA to form the new Technical Committee on Respiratory Protection and Personal Alarm Equipment, which took over the responsibility for NFPA 1982.

The fourth edition represented a complete revision of the third edition and included PASS that are integrated with SCBA and automatic activation of all PASS. It was presented to the membership of the Association at the 1998 Annual Meeting in Cincinnati, OH, and had an effective date of 5 August 1998.

In October 2002, the NFPA Standards Council established a new committee, the Technical Committee on Electronic Safety Equipment, within the Project structure. This new committee was given the responsibility for addressing all electronics in equipment used by emergency responders and was assigned responsibility for NFPA 1982.

--`,,```,,,,````-`-`,,`,,`,`,,`---

Copyright National Fire Protection Association
Provided by IHS under license with NFPA
No reproduction or networking permitted without license from IHS
Not for Resale

The fifth edition of NFPA 1982 represents a complete revision of the fourth edition. During this revision cycle, the Committee received reports from the National Institute for Occupational Safety and Health (NIOSH), Division of Safety Research, regarding their investigations of fire fighter fatalities where there was evidence the PASS alarm signal failed to function or was not heard by other personnel in the area, and in some instances that there was water ingress to the electronic components that diminished or canceled the alarm signal. The National Institute for Standards and Technology (NIST), Building and Fire Research Laboratory, partnered with NIOSH to characterize the performance of PASS devices in the fire-fighting environment. NIST determined that exposure to high temperature environments caused the loudness of the alarm signal to be reduced. This reduction in loudness can cause the alarm signal to become indistinguishable from background noise at an emergency scene. Initial laboratory testing by NIST highlighted that this sound reduction may begin to occur at temperatures as low as 300°F. All PASS devices that were evaluated experienced significant alarm signal degradation at temperatures between 300°F and 500°F. As the PASS cooled, the alarm signal on most of the units returned to pre-exposure sound levels.

NIOSH and others also noted that water ingress did occur or could have occurred in several cases, causing the alarm signal to cease to function with any effectiveness, but that after the PASS electronics dried, the alarm signal would again function.

The Committee addressed these issues and others and developed changes to the requirements for this fifth edition. The more significant changes are the following:

(1) New water immersion requirements and testing where PASS is exposed to 350°F for 15 minutes and then to water submersion in 1.5 m (4.9 ft) also for 15 minutes for each of six cycles. PASS is examined to determine no water ingress, that all PASS signals must function properly, and that electronic data logging functions operate properly. PASS is then re-immersed in the test water for an additional 5 minutes with the power source compartment(s) open; following those 5 minutes, the PASS is removed from water and wiped dry, and the electronics compartment is opened and examined to determine no water ingress.
(2) Revised high temperature resistance requirements and added new high temperature functionality requirements and testing procedures where PASS is exposed to 500°F for 5 minutes while mounted in a circulating hot air oven. The PASS alarm signal must function at or above the required 95 dBA sound level for the required duration of the signal, electronic data logging functions must operate properly, and no part of the PASS can show evidence of melting, dripping, or igniting.
(3) New tumble–vibration requirements and testing in which PASS is "tumbled" in a rotating drum for 3 hours. The PASS alarm signal must function at the required 95 dBA sound level, and electronic data logging functions must operate properly.
(4) New requirements to prevent muffling of the alarm signal where PASS is mounted on a test subject and evaluated in five positions (face down with arms extended, supine left, supine right, fetal right with knees drawn to chest, fetal left with knees drawn to chest), and the alarm signal must function at or above the required 95 dBA sound level in each of the positions.

In Memoriam, 11 September 2001

We pay tribute to the 343 members of FDNY who gave their lives to save civilian victims on 11 September 2001, at the World Trade Center. They are true American heroes in death, but they were also American heroes in life. We will keep them in our memory and in our hearts. They are the embodiment of courage, bravery, and dedication. May they rest in peace.

For additional information regarding PASS, go to:
www.nfpa.org/pass

Copyright National Fire Protection Association
Provided by IHS under license with NFPA
No reproduction or networking permitted without license from IHS
Not for Resale

Technical Correlating Committee on Fire and Emergency Services Protective Clothing and Equipment (FAE-AAC)

Richard M. Duffy, *Chair*
International Association of Fire Fighters, DC [L]

William M. Lambert, *Secretary*
Mine Safety Appliances Company, PA [M]
Rep. Compressed Gas Association

Leslie Anderson, U.S. Department of Agriculture, MT [E]
Roger L. Barker, North Carolina State University, NC [SE]
Les Boord, U.S. Department of Health and Human Services, PA [E]
Steven D. Corrado, Underwriters Laboratories Incorporated, NC [RT]
Nicholas J. Curtis, Lion Apparel, Incorporated, OH [M]
Robert A. Freese, Globe Manufacturing Company, NH [M]
Andy Gbur, Intertek, OH [RT]
Bill Grilliot, TFG/Morning Pride Manufacturing LLC, OH [M]
Rep. Fire and Emergency Manufacturers and Services Association Incorporated
Kimberly M. Henry, PBI Performance Products, Incorporated, NC [M]
James S. Johnson, Lawrence Livermore National Laboratory, CA [RT]
Cy Long, Texas Commission on Fire Protection, TX [E]
David G. Matthews, Fire & Industrial (P.P.E.) Limited, United Kingdom [SE]
Rep. International Standards Organization
Jim Minx, Oklahoma State Firefighters Association, OK [C]
Gary L. Neilson, Reno Fire Department, NV [U]
Stephen R. Sanders, Safety Equipment Institute (SEI), VA [RT]
Denise N. Statham, Southern Mills, Incorporated, GA [M]
Jeffrey O. Stull, International Personnel Protection, Incorporated, TX [SE]
David Trivette, Tyco/Scott Health & Safety, NC [M]
Rep. International Safety Equipment Association
Robert D. Tutterow, Jr., Charlotte Fire Department, NC [U]
Rep. Fire Industry Equipment Research Organization
Harry P. Winer, U.S. Department of the Navy, MA [RT]

Alternates

Jason L. Allen, Intertek, NY [RT]
(Alt. to A. Gbur)
Eric J. Beck, Mine Safety Appliances Company, PA [M]
(Alt. to W. M. Lambert)
Janice C. Bradley, International Safety Equipment Association, VA [M]
(Alt. to D. Trivette)
Patricia A. Freeman, Globe Manufacturing Company, Incorporated, NH [M]
(Alt. to R. A. Freese)
Patricia A. Gleason, Safety Equipment Institute (SEI), VA [RT]
(Alt. to S. R. Sanders)
Mary I. Grilliot, TFG/Morning Pride Manufacturing LLC, OH [M]
(Alt. to B. Grilliot)
William E. Haskell III, U.S. Department of Health and Human Services, MA [E]
(Alt. to L. Boord)
Steven B. Lumry, Oklahoma City Fire Department, OK [C]
(Alt. to J. Minx)
Andrew P. Perrella, E. I. DuPont Company, DE [M]
(Alt. to K. M. Henry)
Frank P. Taylor, Lion Apparel, Incorporated, VA [M]
(Alt. to N. J. Curtis)

Nonvoting

Donna P. Brehm, Virginia Beach Fire Department, VA [U]
Rep. TC on Emergency Medical Services Protective Clothing and Equipment
Dean W. Cox, Fairfax County Fire and Rescue Department, VA [U]
Rep. TC on Special Operations Protective Clothing and Equipment
Glenn P. Jirka, Miami Township Fire and EMS Division, OH [E]
Rep. TC on Hazardous Materials Protective Clothing and Equipment
Kirk Owen, Plano Fire Department, TX [U]
Rep. TC on Structural and Proximity Fire Fighting Protective Clothing and Equipment
Ray F. Reed, Dallas Fire Rescue, TX [U]
Rep. TC on Respiratory Protection Equipment
Bruce H. Varner, Santa Rosa Fire Department, CA [E]
Rep. TC on Electronic Safety Equipment

Bruce W. Teele, NFPA Staff Liaison

This list represents the membership at the time the Committee was balloted on the final text of this edition. Since that time, changes in the membership may have occurred. A key to classifications is found at the back of the document.

NOTE: Membership on a committee shall not in and of itself constitute an endorsement of the Association or any document developed by the committee on which the member serves.

Committee Scope: This Committee shall have primary responsibility for documents on the design, performance, testing, and certification of protective clothing and protective equipment manufactured for fire and emergency services organizations and personnel, to protect against exposures encountered during emergency incident operations. This Committee shall also have the primary responsibility for documents on the selection, care, and maintenance of such protective clothing and protective equipment by fire and emergency services organizations and personnel.

Copyright National Fire Protection Association
Provided by IHS under license with NFPA
No reproduction or networking permitted without license from IHS
Not for Resale

Technical Committee on Electronic Safety Equipment (FAE-ELS)

Bruce H. Varner, *Chair*
Santa Rosa Fire Department, CA [E]

Steven B. Lumry, *Secretary*
Oklahoma City Fire Department, OK [C]
Rep. Oklahoma State Firefighters Association

Jason L. Allen, Intertek, NY [RT]
Robert J. Athanas, SAFE-IR, Incorporated/FDNY, NY [U]
Robert J. Bonahoom, Mine Safety Appliances Company, PA [M]
Nelson P. Bryner, U.S. National Institute of Standards and Technology, MD [RT]
A. Paul Bull, Fairfax County Fire and Rescue Department, VA [U]
John P. Campman, Grace Industries, Incorporated, PA [M]
John G. Casali, Virginia Tech University, VA [SE]
Richard W. Duncanson, City of Middletown Fire Department, NY [E]
Rep. NFPA Fire Service Section
Michael G. Feely, Boston Fire Department, MA [U]
Wayne C. Haase, Summit Safety, Incorporated, MA [M]
Roy R. Hari, Marion County Fire District #1, OR [E]
William E. Haskell III, NIOSH NPPTL, MA [E]
Karen Lehtonen, Lion Apparel, Incorporated, OH [M]
Michael F. McKenna, Sacramento Metropolitan Fire District, CA [U]
David E. Mills, Underwriters Laboratories Incorporated, IL [RT]
Lawrence M. Nyberg, Motorola, Incorporated, IL [M]
Craig Parkulo, Tyco/Scott Health & Safety, NC [M]
Fred H. Rascoe, International Safety Instruments, Incorporated, GA [M]
Rep. International Safety Equipment Association
Stephen R. Sanders, Safety Equipment Institute (SEI), VA [RT]
Christina Spoons, Westmont Fire Department, IL [C]
Donald H. J. Turno, Washington Savannah River Company, SC [U]
Timothy W. Wolf, Scottsdale Fire Department, AZ [C]

Alternates

Donald Aldridge, Lion Apparel, Incorporated, OH [M]
(Alt. to K. Lehtonen)
Francine K. Amon, U.S. National Institute of Standards and Technology, MD [RT]
(Alt. to N. P. Bryner)
Janice C. Bradley, International Safety Equipment Association, VA [M]
(Alt. to F. H. Rascoe)
Patricia A. Gleason, Safety Equipment Institute (SEI), VA [RT]
(Alt. to S. R. Sanders)
John Jarboe, Grace Industries, Incorporated, MD [M]
(Alt. to J. P. Campman)
Richard Katz, Mine Safety Appliances Company, PA [M]
(Alt. to R. J. Bonahoom)
Robert M. Knabbe, SAFE-IR, Incorporated/FDNY, NY [U]
(Alt. to R. J. Athanas)
Jeff A. Lancaster, Virginia Tech University, VA [SE]
(Alt. to J. G. Casali)
Jeffrey L. Landis, Tyco/Scott Health & Safety, NC [M]
(Alt. to C. Parkulo)
Steven D. Townsend, City of Carrollton Fire Department, TX [E]
(Alt. to B. H. Varner)

Bruce W. Teele, NFPA Staff Liaison

This list represents the membership at the time the Committee was balloted on the final text of this edition. Since that time, changes in the membership may have occurred. A key to classifications is found at the back of the document.

NOTE: Membership on a committee shall not in and of itself constitute an endorsement of the Association or any document developed by the committee on which the member serves.

Committee Scope: This Committee shall have primary responsibility for documents on the design, performance, testing, and certification of electronic safety equipment used by fire and emergency services personnel during emergency incident operations and shall also have primary responsibility for documents on the selection, care, and maintenance of electronic safety equipment.

Copyright National Fire Protection Association
Provided by IHS under license with NFPA
No reproduction or networking permitted without license from IHS
Not for Resale

Contents

Chapter 1 Administration **1982–** 6
1.1 Scope **1982–** 6
1.2 Purpose **1982–** 6
1.3 Application **1982–** 6
1.4 Units **1982–** 6

Chapter 2 Referenced Publications **1982–** 6
2.1 General **1982–** 6
2.2 NFPA Publications **1982–** 6
2.3 Other Publications **1982–** 6
2.4 References for Extracts in Mandatory Sections. (Reserved) **1982–** 7

Chapter 3 Definitions **1982–** 7
3.1 General **1982–** 7
3.2 NFPA Official Definitions **1982–** 7
3.3 General Definitions **1982–** 7

Chapter 4 Certification **1982–** 8
4.1 General **1982–** 8
4.2 Certification Program **1982–** 8
4.3 Inspection and Testing **1982–** 9
4.4 Recertification **1982–**11
4.5 Manufacturers' Quality Assurance Program **1982–**12
4.6 Hazards Involving Compliant Product ... **1982–**12
4.7 Manufacturers' Investigation of Complaints and Returns **1982–**13
4.8 Manufacturers' Safety Alert and Product Recall Systems **1982–**13

Chapter 5 Labeling and Information **1982–**13
5.1 Product Labeling Requirements **1982–**13
5.2 User Information **1982–**14

Chapter 6 Design Requirements **1982–**14
6.1 General Design Requirements for PASS **1982–**14
6.2 Mode Selection Design Requirements for PASS **1982–**14
6.3 Motion Sensing Design Requirements for PASS **1982–**15
6.4 Signal Design Requirements for PASS **1982–**15

Chapter 7 Performance Requirements **1982–**16
7.1 Sound Pressure Levels **1982–**16
7.2 Electronic Temperature Stress **1982–**16
7.3 Corrosion Resistance **1982–**16
7.4 Immersion Leakage Resistance **1982–**16
7.5 Case Integrity **1982–**16
7.6 Intrinsic Safety **1982–**16
7.7 Shock Sensitivity **1982–**16
7.8 Impact and Vibration Resistance **1982–**16
7.9 Retention System **1982–**17
7.10 Water Drainage **1982–**17
7.11 Heat Resistance **1982–**17
7.12 Heat and Flame Resistance **1982–**17
7.13 Product Label Durability **1982–**17
7.14 Alarm Signal Muffle Test **1982–**17

Chapter 8 Test Methods **1982–**17
8.1 Sample Preparation **1982–**17
8.2 Sound Pressure Level Tests **1982–**18
8.3 Electronic Temperature Stress Test **1982–**19
8.4 Corrosion Resistance Test **1982–**20
8.5 Heat and Immersion Leakage Test **1982–**20
8.6 Case Integrity Test **1982–**21
8.7 Shock Sensitivity Test **1982–**21
8.8 Impact Acceleration Resistance Test **1982–**22
8.9 Vibration Resistance Test **1982–**23
8.10 Retention System Test **1982–**23
8.11 Water Drainage Test **1982–**24
8.12 High Temperature Functionality Test **1982–**24
8.13 Heat and Flame Test **1982–**25
8.14 Signal Frequency Test **1982–**29
8.15 Product Label Durability Test **1982–**30
8.16 Tumble–Vibration Test **1982–**31
8.17 PASS *Alarm Signal* Muffle Test **1982–**31

Annex A Explanatory Material **1982–**33

Annex B Informational References **1982–**37

Index **1982–**39

Copyright National Fire Protection Association
Provided by IHS under license with NFPA
No reproduction or networking permitted without license from IHS
Not for Resale

NFPA 1982

Standard on

Personal Alert Safety Systems (PASS)

2007 Edition

IMPORTANT NOTE: This NFPA document is made available for use subject to important notices and legal disclaimers. These notices and disclaimers appear in all publications containing this document and may be found under the heading "Important Notices and Disclaimers Concerning NFPA Documents." They can also be obtained on request from NFPA or viewed at www.nfpa.org/disclaimers.

NOTICE: An asterisk (*) following the number or letter designating a paragraph indicates that explanatory material on the paragraph can be found in Annex A.

Information on referenced publications can be found in Chapter 2 and Annex B.

Chapter 1 Administration

1.1 Scope.

1.1.1* This standard shall specify minimum requirements for the design, performance, testing, and certification for all Personal Alert Safety Systems (PASS) for emergency services personnel.

1.1.2 This standard shall specify the requirements for all new PASS, including but not limited to stand-alone PASS and integrated PASS.

1.1.3 This standard shall not specify requirements for any PASS manufactured to previous editions of this standard.

1.1.4* This standard shall not specify requirements for any accessories that could be attached to the certified product but that are not necessary for the certified product to meet the requirements of this standard.

1.1.5 This standard shall not be construed as addressing all the safety concerns associated with the use of compliant PASS. It shall be the responsibility of the persons and organizations that use compliant PASS to establish safety and health practices and to determine the applicability of regulatory limitations prior to use.

1.1.6 This standard shall not be construed as addressing all the safety concerns, if any, associated with the use of this standard by testing facilities. It shall be the responsibility of the persons and organizations that use this standard to conduct testing of PASS to establish safety and health practices and to determine the applicability of regulatory limitations prior to using this standard for any designing, manufacturing, and testing.

1.1.7 Nothing herein is intended to restrict any jurisdiction or manufacturer from exceeding these minimum requirements.

1.2 Purpose.

1.2.1 The purpose of this standard shall be to establish minimum requirements for PASS that are intended for use by emergency services personnel during emergency operations and that emit a signal to summon aid in the event the user becomes incapacitated or needs assistance.

1.2.2* Controlled laboratory tests used to determine compliance with the performance requirements of this standard shall not be deemed as establishing PASS performance levels for all situations to which fire-fighting or emergency services personnel can be exposed.

1.2.3 This standard shall not be interpreted or used as a detailed manufacturing or purchase specification but shall be permitted to be referenced in purchase specifications as minimum requirements.

1.3 Application.

1.3.1 This standard shall not apply to any PASS manufactured to previous editions of this standard.

1.3.2* This standard shall not apply to any accessories that could be attached to the certified product before or after purchase but that are not necessary for the certified product to meet the requirements of this standard.

1.3.3 This standard shall not apply to the use of PASS, the requirements for which are specified in NFPA 1500, *Standard on Fire Department Occupational Safety and Health Program.*

1.4 Units.

1.4.1 In this standard, values for measurement are followed by an equivalent in parentheses, but only the first value stated shall be regarded as the requirement.

1.4.2 Because the equivalent values in parentheses are approximate, they shall not be considered as the requirement.

Chapter 2 Referenced Publications

2.1 General. The documents or portions thereof listed in this chapter are referenced within this standard and shall be considered part of the requirements of this document.

2.2 NFPA Publications. National Fire Protection Association, 1 Batterymarch Park, Quincy, MA 02169-7471.

NFPA 1971, *Standard on Protective Ensembles for Structural Fire Fighting and Proximity Fire Fighting,* 2007 edition.

NFPA 1981, *Standard on Open-Circuit Self-Contained Breathing Apparatus (SCBA) for Emergency Services,* 2007 edition.

2.3 Other Publications.

2.3.1 ANSI Publications. American National Standards Institute, Inc., 25 West 43rd Street, 4th Floor, New York, NY 10036.

ANSI/UL 913, *Standard for Intrinsically Safe Apparatus and Associated Apparatus for Use in Class I, II, III, Division 1, Hazardous (Classified) Locations,* 2006.

ANSI B46.1, *Surface Texture,* 1978

ANSI S1.13, *Methods for Measurement of Sound Pressure Level®,* 2005.

ANSI Y1.1, *Abbreviations for Use on Drawings and Text,* 1972.

ANSI Y14.SM, *Dimensioning and Tolerancing,* 1982.

2.3.2 ASTM Publication. ASTM International, 100 Barr Harbor Drive, P.O. Box C700, West Conshohocken, PA 19428-2959.

ASTM B 117, *Standard Practice for Operating Salt Spray (Fog) Apparatus,* 2003.

Copyright National Fire Protection Association
Provided by IHS under license with NFPA
No reproduction or networking permitted without license from IHS
Not for Resale

2.3.3 ISO Publications. International Organization for Standardization, 1, rue de Varembé, Case postale 56, CH-1211 Geneve 20, Switzerland.

ISO 9001, *Quality management systems — Requirements,* 2000.

ISO/IEC 17011, *Conformity assessment — General requirements for accreditation bodies accrediting conformity assessment bodies*, 2004.

ISO/IEC 17021, *Conformity assessment — Requirements for bodies providing audit and certification of management systems*, 2006.

ISO/IEC 17025, *General requirements for the competence of testing and calibration laboratories*, 2005.

ISO 17493, *Clothing and equipment for protection against heat — Test method for convective heat resistance using a hot air circulating oven*, 2000.

ISO Guide 27, *Guidelines for corrective action to be taken by a certification body in the event of misuse of its mark of conformity*, 1983.

ISO Guide 62, *General requirements for bodies operating assessment and certification/registration of quality systems*, 1996.

ISO/IEC Guide 65, *General requirements for bodies operating product certification systems*, 1996.

2.3.4 Other Publications.

Merriam-Webster's Collegiate Dictionary, 11th edition, Merriam-Webster, Inc., Springfield, MA, 2003.

2.4 References for Extracts in Mandatory Sections. (Reserved)

Chapter 3 Definitions

3.1 General. The definitions contained in this chapter shall apply to the terms used in this standard. Where terms are not defined in this chapter or within another chapter, they shall be defined using their ordinarily accepted meanings within the context in which they are used. *Merriam-Webster's Collegiate Dictionary,* 11th edition, shall be the source for the ordinarily accepted meaning.

3.2 NFPA Official Definitions.

3.2.1* Approved. Acceptable to the authority having jurisdiction.

3.2.2* Authority Having Jurisdiction (AHJ). An organization, office, or individual responsible for enforcing the requirements of a code or standard, or for approving equipment, materials, an installation, or a procedure.

3.2.3 Labeled. Equipment or materials to which has been attached a label, symbol, or other identifying mark of an organization that is acceptable to the authority having jurisdiction and concerned with product evaluation, that maintains periodic inspection of production of labeled equipment or materials, and by whose labeling the manufacturer indicates compliance with appropriate standards or performance in a specified manner.

3.2.4* Listed. Equipment, materials, or services included in a list published by an organization that is acceptable to the authority having jurisdiction and concerned with evaluation of products or services, that maintains periodic inspection of production of listed equipment or materials or periodic evaluation of services, and whose listing states that either the equipment, material, or service meets appropriate designated standards or has been tested and found suitable for a specified purpose.

3.2.5 Shall. Indicates a mandatory requirement.

3.2.6 Should. Indicates a recommendation or that which is advised but not required.

3.2.7 Standard. A document, the main text of which contains only mandatory provisions using the word "shall" to indicate requirements and which is in a form generally suitable for mandatory reference by another standard or code or for adoption into law. Nonmandatory provisions shall be located in an appendix or annex, footnote, or fine-print note and are not to be considered a part of the requirements of a standard.

3.3 General Definitions.

3.3.1 Alarm Signal. An audible warning that is identifiable as an indication that an emergency services person is in need of assistance.

3.3.2 Annunciator. The component designed to emit audible signals.

3.3.3 Certification Organization. An independent, third-party organization that determines product compliance with the requirements of this standard with a labeling/listing/follow-up program.

3.3.4 Certification/Certified. A system whereby a certification organization determines that a manufacturer has demonstrated the ability to produce a product that complies with the requirements of this standard, authorizes the manufacturer to use a label on listed products that comply with the requirements of this standard, and establishes a follow-up program conducted by the certification organization as a check on the methods the manufacturer uses to determine continued compliance of labeled and listed products with the requirements of this standard.

3.3.5 Compliance/Compliant. Meeting or exceeding all applicable requirements of this standard.

3.3.6 Compliant Product(s). Clothing or equipment that is certified to the applicable NFPA standard.

3.3.7* Component. Any material, part, or subassembly used in the construction of the compliant product.

3.3.8 Drip. To run or fall in drops or blobs.

3.3.9 Follow-Up Program. The sampling, inspections, tests, or other measures conducted by the certification organization on a periodic basis to determine the continued compliance of labeled and listed products that are being produced by the manufacturer to the requirements of this standard.

3.3.10 Manufacturer. The entity that directs and controls any of the following: compliant product design, compliant product manufacturing, or compliant product quality assurance; or the entity that assumes the liability for the compliant product or provides the warranty for the compliant product.

3.3.11 Melt. A response to heat by a material resulting in evidence of flowing or dripping.

3.3.12 Model. The collective term used to identify a group of elements or items of the same basic design and components from a single manufacturer produced by the same manufacturing and quality assurance procedures that are covered by the same certification.

Copyright National Fire Protection Association
Provided by IHS under license with NFPA
No reproduction or networking permitted without license from IHS
Not for Resale

3.3.13 PASS. Acronym for Personal Alert Safety Systems. See also 3.3.14, Personal Alert Safety Systems (PASS).

3.3.14 Personal Alert Safety Systems (PASS). A device that continually senses for lack of movement of the wearer to automatically activate the alarm signal indicating the wearer is in need of assistance. The device can also be manually activated to trigger the alarm signal.

3.3.14.1 ***Integrated PASS.*** A removable or nonremovable PASS that is an integral part of another item or items of protective clothing, protective equipment, or both.

3.3.14.1.1 ***Nonremovable.*** An integrated PASS that is not removable and cannot be used independently of the item or items with which it is integrated.

3.3.14.1.2 ***Removable.*** An integrated PASS that is removable so that it can be used independently of the item or items with which it is integrated.

3.3.14.2 ***Stand-Alone PASS.*** A PASS that is not an integral part of any other item of protective clothing or protective equipment.

3.3.15 Pre-Alarm Signal. An audible warning that is identifiable as an indication that a PASS is about to sound the *alarm signal*.

3.3.16 Product Label. A marking provided by the manufacturer for each compliant product containing compliant statements, certification statements, manufacturer and model information, or similar data. The product label is not the certification organization's label, symbol, or identifying mark; however, the certification organization's label, symbol, or identifying mark is attached to or is part of the product label.

3.3.17 Safety Alert. The procedure by which a manufacturer notifies users, the marketplace, and distributors of potential safety concerns regarding a product.

3.3.18 Sample. (1) The ensemble, element, component, or composite that is conditioned for testing. *(See also 3.3.19, Specimen.)* (2) Ensembles, elements, items, or components that are randomly selected from the manufacturer's production line, from the manufacturer's inventory, or from the open market.

3.3.19 Specimen. The conditioned ensemble, element, item, or component that is tested. Specimens are taken from samples. *(See also 3.3.18, Sample.)*

3.3.20 Surrogate Cylinder. A breathing air cylinder for testing only in which the mass of the breathing air is replaced by a substitute mass.

Chapter 4 Certification

4.1 General.

4.1.1 The certification process for PASS, as being compliant with NFPA 1982, shall include the requirements of Section 4.1, General; Section 4.2, Certification Program; Section 4.3, Inspection and Testing; Section 4.4, Recertification; Section 4.5, Manufacturers' Quality Assurance Program; Section 4.6, Hazards Involving Compliant Product; Section 4.7, Manufacturers' Investigation of Complaints and Returns; and Section 4.8, Manufacturers' Safety Alert and Product Recall Systems.

4.1.2 All PASS that are labeled as being compliant with this standard shall meet or exceed all applicable requirements specified in this standard and shall be certified. Manufacturers shall not claim compliance with a portion(s) or segment(s) of the requirements of this standard and shall not use the name or identification of this standard, NFPA 1982, in any statements about their respective products unless the product is certified to this standard.

4.1.3 All certification shall be performed by a certification organization that meets at least the requirements specified in Section 4.2, Certification Program, and that is accredited for personal protective equipment in accordance with ISO/IEC Guide 65, *General requirements for bodies operating product certification systems.* The accreditation shall be issued by an accreditation body operating in accordance with ISO/IEC 17011, *Conformity assessment — General requirements for accreditation bodies accrediting conformity assessment bodies.*

4.1.4 All individual compliant PASS shall be labeled. All individual compliant PASS shall also have a product label or labels that meet the requirements specified in Section 5.1.

4.1.5 All compliant PASS shall be listed by the certification organization. The listing shall uniquely identify the certified product, for example, by style, model number, or part number.

4.1.6* The certification organization's label, symbol, or identifying mark shall be attached to the product label or shall be part of the product label.

4.1.7 The certification organization shall not certify any PASS to the 1998 edition of this standard on or after the NFPA effective date for the 2007 edition, which is 20 December 2006.

4.1.8 The certification organization shall not permit any manufacturer to label any PASS as compliant with the 1998 edition of this standard on or after 31 August 2007.

4.1.9 The certification organization shall require manufacturers to remove all certification labels and product labels indicating compliance with the 1998 edition of this standard from all PASS that are under the control of the manufacturer on 31 August 2007. The certification organization shall verify this action is taken.

4.2 Certification Program.

4.2.1* The certification organization shall not be owned or controlled by manufacturers or vendors of the product being certified.

4.2.2 The certification organization shall be primarily engaged in certification work and shall not have a monetary interest in the product's ultimate profitability.

4.2.3 The certification organization shall be accredited for personal protective equipment in accordance with ISO/IEC Guide 65, *General requirements for bodies operating product certification systems.* The accreditation shall be issued by an accreditation body operating in accordance with ISO/IEC 17011, *Conformity assessment — General requirements for accreditation bodies accrediting conformity assessment bodies.*

4.2.4 The certification organization shall refuse to certify products to this standard that do not comply with all applicable requirements of this standard.

4.2.5* The contractual provisions between the certification organization and the manufacturer shall specify that certification is contingent on compliance with all applicable requirements of this standard.

4.2.5.1 The certification organization shall not offer or confer any conditional, temporary, or partial certifications.

Copyright National Fire Protection Association
Provided by IHS under license with NFPA
No reproduction or networking permitted without license from IHS
Not for Resale

4.2.5.2 Manufacturers shall not be authorized to use any label or reference to the certification organization on products that are not compliant with all applicable requirements of this standard.

4.2.6* The certification organization shall have laboratory facilities and equipment available for conducting proper tests to determine product compliance.

4.2.6.1 The certification organization laboratory facilities shall have in place a program and functioning for calibration of all instruments, and procedures shall be in use to ensure proper control of all testing.

4.2.6.2 The certification organization laboratory facilities shall follow good practice regarding the use of laboratory manuals, form data sheets, documented calibration and calibration routines, performance verification, proficiency testing, and staff qualification and training programs.

4.2.7 The certification organization shall require the manufacturer to establish and maintain a quality assurance program that meets the requirements of Section 4.5, Manufacturers' Quality Assurance Program.

4.2.7.1* The certification organization shall require the manufacturer to have a product recall system as specified in Section 4.8, Manufacturers' Safety Alert and Product Recall Systems, as part of the manufacturer's quality assurance program.

4.2.7.2 The certification organization shall audit the manufacturer's quality assurance program to ensure that the quality assurance program provides continued product compliance with this standard.

4.2.8 The certification organization and the manufacturer shall evaluate any changes affecting the form, fit, or function of the compliant product to determine its continued certification to this standard.

4.2.9* The certification organization shall have a follow-up inspection program of the manufacturer's facilities of the compliant product with at least two random and unannounced visits per 12-month period to verify the product's continued compliance.

4.2.9.1 As part of the follow-up inspection program, the certification organization shall select sample compliant product at random from the manufacturer's production line, from the manufacturer's in-house stock, or from the open market.

4.2.9.2 Sample product shall be evaluated by the certification organization to verify the product's continued compliance in order to assure that the materials, components, and manufacturing quality assurance systems are consistent with the materials, components, and manufacturing quality assurance that were inspected and tested by the certification organization during initial certification and recertification.

4.2.9.3 The certification organization shall be permitted to conduct specific testing to verify the product's continued compliance.

4.2.9.4 For products, components, and materials where prior testing, judgment, and experience of the certification organization have shown results to be in jeopardy of not complying with this standard, the certification organization shall conduct more frequent testing of sample product, components, and materials acquired in accordance with 4.2.9.1 against the applicable requirements of this standard.

4.2.10 The certification organization shall have in place a series of procedures, as specified in Section 4.6, Hazards Involving Compliant Product, that address reports of situations in which a compliant product is subsequently found to be hazardous.

4.2.11 The certification organization's operating procedures shall provide a mechanism for the manufacturer to appeal decisions. The procedures shall include the presentation of information from both sides of a controversy to a designated appeals panel.

4.2.12 The certification organization shall be in a position to use legal means to protect the integrity of its name and label. The name and label shall be registered and legally defended.

4.3 Inspection and Testing.

4.3.1 For both initial certification and recertification of compliant products, the certification organization shall conduct both inspection and testing as specified in this section.

4.3.2 All inspections, evaluations, conditioning, and testing for certification or for recertification shall be conducted by a certification organization's testing laboratory that is accredited in accordance with the requirements of ISO/IEC 17025, *General requirements for the competence of testing and calibration laboratories*.

4.3.2.1 The certification organization's testing laboratory's scope of accreditation to ISO/IEC 17025, *General requirements for the competence of testing and calibration laboratories*, shall encompass testing of personal protective equipment.

4.3.2.2 The accreditation of a certification organization's testing laboratory shall be issued by an accreditation body operating in accordance with ISO/IEC 17011, *Conformity assessment — General requirements for accreditation bodies accrediting conformity assessment bodies*.

4.3.3 A certification organization shall be permitted to utilize conditioning and testing results conducted by a product or component manufacturer for certification or recertification provided the manufacturer's testing laboratory meets the requirements specified in 4.3.3.1 through 4.3.3.5.

4.3.3.1 The manufacturer's testing laboratory shall be accredited in accordance with the requirements of ISO/IEC 17025, *General requirements for the competence of testing and calibration laboratories*.

4.3.3.2 The manufacturer's testing laboratory's scope of accreditation to ISO/IEC 17025, *General requirements for the competence of testing and calibration laboratories*, shall encompass testing of personal protective equipment.

4.3.3.3 The accreditation of a manufacturer's testing laboratory shall be issued by an accreditation body operating in accordance with ISO/IEC 17011, *Conformity assessment — General requirements for accreditation bodies accrediting conformity assessment bodies*.

4.3.3.4 The certification organization shall approve the manufacturer's testing laboratory.

4.3.3.5 The certification organization shall determine the level of supervision and witnessing of the conditioning and testing for certification or recertification conducted at the manufacturer's testing laboratory.

4.3.4 Sampling levels for inspection to determine compliance with this standard shall be established by the certification organization and the manufacturer to ensure a reasonable

Copyright National Fire Protection Association
Provided by IHS under license with NFPA
No reproduction or networking permitted without license from IHS
Not for Resale

and acceptable reliability at a reasonable and acceptable confidence level that products certified as being compliant with the standard are compliant.

4.3.5 Inspection by the certification organization shall include a review of all product labels to ensure that all required label attachments, compliance statements, certification statements, and other product information are at least as specified in Section 5.1, Product Labeling Requirements.

4.3.6 Inspection by the certification organization shall include an evaluation of any symbols and pictorial graphic representations used on product labels or in user information, as permitted in 5.1.4, to ensure that the symbols are clearly explained in the product's user information package.

4.3.7 Inspection by the certification organization shall include a review of the user information required by Section 5.2, User Information, to ensure that the information has been developed and is available.

4.3.8 Inspection by the certification organization for determining compliance with the design requirements specified in Chapter 6 shall be performed on whole and complete PASS.

4.3.9* Testing conducted by the certification organization in accordance with the testing requirements of Chapter 8, for determining product compliance with the applicable performance requirements specified in Chapter 7, shall be performed on whole and complete PASS. Where the PASS is an integral part of another item of protective clothing or protective equipment, that item with the PASS incorporated shall be tested as a whole, unless otherwise specified herein.

4.3.10 PASS shall be tested for initial certification to this edition of NFPA 1982, *Standard on Personal Alert Safety Systems (PASS),* and shall meet the performance requirements of the test series specified in the test matrix in Table 4.3.10(a) and Table 4.3.10(b) as applicable for the type of PASS being certified.

Table 4.3.10(a) Test Matrix for Stand-Alone PASS and Removable Integrated PASS

Test Order	Specimens 1–3	Specimens 4–6	Specimens 7–9	Specimens 10–12	Specimens 13–15	Specimens 16–18	Specimens 19–21
1	Sound pressure (Section 8.2), specimens 1–3	Shock sensitivity (Section 8.7), specimens 4–6	Electronic temperature stress — elevated (8.3.5), specimens 7–9	Water drainage (Section 8.11), specimens 10–12	Case integrity (Section 8.6), specimens 13–15	Vibration test (Section 8.9), specimens 16–18	Tumble vibration (Section 8.16), specimens 19–21
2	Alarm signal muffle (Section 8.17), specimens 1–3	Impact acceleration — ambient (Section 8.8), specimen 4	Electronic temperature stress — low (8.3.6), specimens 7–9	Corrosion (Section 8.4), specimens 10–12	Retention system (Section 8.10), specimens 13–15		
3	Signal frequencies (Section 8.14), specimens 1–3	Impact acceleration — cold (Section 8.8), specimen 5	Electronic temperature stress — shock (8.3.7), specimens 7–9	Product label durability (Section 8.15), specimens 10–12	High temperature functionality (Section 8.12), specimens 13–15		
4	Heat/flame Test 1 (8.13.5.9), specimen 1	Impact acceleration — elevated (Section 8.8), specimen 6	Product label durability (Section 8.15), specimens 7–9				
5	Heat/flame Test 1 (8.13.5.10), specimen 1		Heat and immersion leakage (Section 8.5), specimens 7–9				
6	Heat/flame Test 1 (8.13.5.11), specimen 1		Product label durability (Section 8.15), specimens 7–9				

--`,,```,,,,````-`-`,,`,,`,`,,`---

Copyright National Fire Protection Association
Provided by IHS under license with NFPA
No reproduction or networking permitted without license from IHS
Not for Resale

Table 4.3.10(b) Test Matrix for Nonremovable Integrated PASS

Test Order	Specimens 1–3	Specimens 4–6	Specimens 7–9	Specimens 10–12	Specimens 13–15	Specimens 16–18
1	Sound pressure (Section 8.2), specimens 1–3	Shock sensitivity (Section 8.7), specimens 4–6	Electronic temperature stress — elevated (8.3.5), specimens 7–9	Water drainage (Section 8.11), specimens 10–12	Case integrity (Section 8.6), specimens 13–15	Tumble vibration (Section 8.16), specimens 16–18
2	Alarm signal muffle (Section 8.17), specimens 1–3	Vibration test (Section 8.9), specimens 4–6	Electronic temperature stress — low (8.3.6), specimens 7–9	Corrosion (Section 8.4), specimens 10–12	High temperature functionality (Section 8.12), specimens 13–15	
3	Signal frequencies (Section 8.14), specimens 1–3		Electronic temperature stress — shock (8.3.7, specimens 7–9	Product label durability (Section 8.15), specimens 10–12		
4	Heat/flame test 1 (8.13.5.9), specimen 1		Product label durability (Section 8.15), specimens 7–9			
5	Heat/flame test 1 (8.13.5.10), specimen 1		Heat and immersion leakage (Section 8.5), specimens 7–9			
6	Heat/flame test 1 (8.13.5.11), specimen 1		Product label durability (Section 8.15), specimens 7–9			

4.3.10.1 Where there is more than one test for a single test specimen required by Table 4.3.10(a) or Table 4.3.10(b), the order of testing shall be from top to bottom of the test specimen column as shown in the table.

4.3.10.2 When testing removable integrated PASS, test specimens 1, 2, and 3, as identified in Table 4.3.10(a), shall be in the integrated PASS configuration.

4.3.10.3 When testing specimen PASS in accordance with Section 8.3, Electronic Temperature Stress Test; Section 8.4, Corrosion Resistance Test; Section 8.5, Heat Immersion/ Leakage Resistance Test; Section 8.6, Case Integrity Test; Section 8.8, Impact Acceleration Resistance Test; and Section 8.13, Heat and Flame Test, one specimen PASS, instead of all three specimens tested in each test series, shall be selected to be used for evaluation of the requirements of 7.1.2, Pass Alarm Signal. The one specimen PASS that is selected shall be chosen at random from each of the respective series of three specimens for each test.

4.3.11 Any change in the design, construction, or material of a compliant PASS shall necessitate new inspection and testing to verify compliance to all applicable requirements of this standard that the certification organization determines can be affected by such change. This recertification shall be conducted before labeling the modified PASS as being compliant with this standard.

4.3.12 The certification organization shall not allow any modifications, pretreatment, conditioning, or other such special processes of the PASS or any PASS component, prior to the product's submission for evaluation and testing by the certification organization. The certification organization shall accept, from the manufacturer for evaluation and testing for certification, only PASS or PASS components that are the same in every respect to the actual final product or component. Other than as specifically permitted herein, the certification organization shall not allow the substitution, repair, or modification of any PASS or any PASS component during testing.

4.3.13* All testing and inspection shall be performed utilizing the power source(s) specified on the PASS in accordance with 5.1.7(6).

4.4 Recertification.

4.4.1 After initial certification to this edition of NFPA 1982, compliant PASS shall be tested annually for recertification within 12 months from the previous certification or recertification.

4.4.2 Recertification shall occur each year of the 4 years following initial certification. If there is no revision to this edition

Copyright National Fire Protection Association
Provided by IHS under license with NFPA
No reproduction or networking permitted without license from IHS
Not for Resale

of NFPA 1982 by the fifth year following initial certification, compliant PASS shall be required to undergo full certification testing as specified in 4.3.10 in the fifth year.

4.4.3 Unless otherwise indicated, only one test specimen shall be required for each test specified in Table 4.3.10(a) or Table 4.3.10(b), as applicable for the type of PASS being recertified.

4.4.4 Where there is more than one test for a single test specimen PASS required by Table 4.3.10(a) or Table 4.3.10(b), the order of testing shall be from top to bottom of the test specimen column as shown in the tables.

4.5 Manufacturers' Quality Assurance Program.

4.5.1 The manufacturer shall provide and operate a quality assurance program that meets the requirements of this section and that includes a product recall system as specified in 4.2.7.1, and Section 4.8, Manufacturers' Safety Alert and Product Recall Systems.

4.5.2 The operation of the quality assurance program shall evaluate and test compliant product production to the requirements of this standard to assure production remains in compliance.

4.5.3 The manufacturer shall be registered to ISO 9001, *Quality management systems — Requirements.*

4.5.3.1 Registration to the requirements of ISO 9001, *Quality management systems — Requirements,* shall be conducted by a registrar that is accredited for personal protective equipment.

4.5.3.2 Where the registrar specified in 4.5.3.1 is currently accredited for personal protective equipment in accordance with the 1996 edition of ISO Guide 62, *General requirements for bodies operating assessment and certification/registration of quality systems,* that accreditation shall be permitted until 14 September 2008.

4.5.3.3 Not later than 14 September 2008, registrars specified in 4.5.3.1 shall be accredited for personal protective equipment in accordance with the 2006 edition of ISO/IEC 17021, *Conformity assessment — Requirements for bodies providing audit and certification of management systems.*

4.5.3.4 Any new accreditations for registrars specified in 4.5.3.1 for personal protective equipment shall only be in accordance with the 2006 edition of ISO/IEC 17021, *Conformity assessment — Requirements for bodies providing audit and certification of management systems.*

4.5.4* Any entity that meets the definition of *manufacturer* specified in Section 3.3, General Definitions, and therefore is considered to be the "manufacturer" but does not manufacture or assemble the compliant product, shall meet the requirements specified in this Section 4.5.

4.5.5* Where the manufacturer uses subcontractors in the construction or assembly of the compliant product, the locations and names of all subcontractor facilities shall be documented, and the documentation shall be provided to the manufacturer's ISO registrar and to the certification organization.

4.6 Hazards Involving Compliant Product.

4.6.1* The certification organization shall establish procedures to be followed where situation(s) are reported in which a compliant product is subsequently found to be hazardous. These procedures shall comply with the provisions of ISO Guide 27, *Guidelines for corrective action to be taken by a certification body in the event of misuse of its mark of conformity,* and as modified herein.

4.6.2* Where a report of a hazard involved with a compliant product is received by the certification organization, the validity of the report shall be investigated.

4.6.3 With respect to a compliant product, a hazard shall be a condition or create a situation that results in exposing life, limb, or property to an imminently dangerous or dangerous condition.

4.6.4 Where a specific hazard is identified, the determination of the appropriate action for the certification organization and the manufacturer to undertake shall take into consideration the severity of the hazard and its consequences to the safety and health of users.

4.6.5 Where it is established that a hazard is involved with a compliant product, the certification organization shall determine the scope of the hazard including products, model numbers, serial numbers, factory production facilities, production runs, and quantities involved.

4.6.6 The certification organization's investigation shall include, but not be limited to, the extent and scope of the problem as it might apply to other compliant product or compliant product components manufactured by other manufacturers or certified by other certification organizations.

4.6.7 The certification organization shall also investigate reports of a hazard where compliant product is gaining widespread use in applications not foreseen when the standard was written, such applications in turn being ones for which the product was not certified, and no specific scope of application has been provided in the standard, and no limiting scope of application was provided by the manufacturer in written material accompanying the compliant product at the point of sale.

4.6.8 The certification organization shall require the manufacturer of the compliant product, or the manufacturer of the compliant product component if applicable, to assist the certification organization in the investigation and to conduct its own investigation as specified in Section 4.7, Manufacturers' Investigation of Complaints and Returns.

4.6.9 Where the facts indicating a need for corrective action are conclusive and the certification organization's appeal procedures referenced in 4.2.11 have been followed, the certification organization shall initiate corrective action immediately, provided there is a manufacturer to be held responsible for such action.

4.6.10 Where the facts are conclusive and corrective action is indicated, but there is no manufacturer to be held responsible, such as when the manufacturer is out of business or the manufacturer is bankrupt, the certification organization shall immediately notify relevant governmental and regulatory agencies and issue a notice to the user community about the hazard.

4.6.11* Where the facts are conclusive and corrective action is indicated, the certification organization shall take one or more of the following corrective actions:

(1) Notification of parties authorized and responsible for issuing a safety alert when, in the opinion of the certification organization, such a notification is necessary to inform the users.

Copyright National Fire Protection Association
Provided by IHS under license with NFPA
No reproduction or networking permitted without license from IHS
Not for Resale

(2) Notification of parties authorized and responsible for issuing a product recall when, in the opinion of the certification organization, such a recall is necessary to protect the users.
(3) Removing the mark of certification from the product.
(4) Where a hazardous condition exists and it is not practical to implement 4.6.11(1), 4.6.11(2), or 4.6.11(3); or the responsible parties refuse to take corrective action, the certification organization shall notify relevant governmental and regulatory agencies and issue a notice to the user community about the hazard.

4.6.12 The certification organization shall provide a report to the organization or individual identifying the reported hazardous condition and notify them of the corrective action indicated, or that no corrective action is indicated.

4.6.13* Where a change to an NFPA standard(s) is felt to be necessary, the certification organization shall also provide a copy of the report and corrective actions indicated to the NFPA, and shall also submit either a Public Proposal for a proposed change to the next revision of the applicable standard, or a proposed Temporary Interim Amendment (TIA) to the current edition of the applicable standard.

4.7 Manufacturers' Investigation of Complaints and Returns.

4.7.1 Manufacturers shall provide corrective action in accordance with ISO 9001, *Quality management systems — Requirements*, for investigating written complaints and returned products.

4.7.2 Manufacturers' records of returns and complaints related to safety issues shall be retained for at least 5 years.

4.7.3 Where the manufacturer discovers, during the review of specific returns or complaints, that a compliant product or compliant product component can constitute a potential safety risk to end users that is possibly subject to a safety alert or product recall, the manufacturer shall immediately contact the certification organization and provide all information about their review to assist the certification organization with their investigation.

4.8 Manufacturers' Safety Alert and Product Recall Systems.

4.8.1 Manufacturers shall establish a written safety alert system and a written product recall system that describes the procedures to be used in the event that it decides, or is directed by the certification organization, to either issue a safety alert or to conduct a product recall.

4.8.2 The manufacturers' safety alert and product recall system shall provide:

(1) The establishment of a coordinator and responsibilities by the manufacturer for the handling of safety alerts and product recalls
(2) A method of notifying all dealers, distributors, purchasers, users, and the NFPA about the safety alert or product recall that can be initiated within a one week period following the manufacturer's decision to issue a safety alert or to conduct a product recall, or after the manufacturer has been directed by the certification organization to issue a safety alert or conduct a product recall
(3) Techniques for communicating accurately and understandably the nature of the safety alert or product recall and in particular the specific hazard or safety issue found to exist
(4) Procedures for removing product that is recalled and for documenting the effectiveness of the product recall
(5) A plan for either repairing, or replacing, or compensating purchasers for returned product

Chapter 5 Labeling and Information

5.1 Product Labeling Requirements.

5.1.1 Each PASS shall have a product label(s) permanently and conspicuously attached. In all cases, the PASS shall bear at least one product label with the marking requirements specified in 5.1.5 through 5.1.8.

5.1.1.1 Where various components of PASS are not mounted or contained in a single location, case, or enclosure, additional product labels shall be permanently and conspicuously attached to major dispersed components.

5.1.1.2 The text of the product labels for dispersed PASS components shall be permitted to be limited to the marking requirements specified in 5.1.5 and 5.1.6.

5.1.2 Multiple label pieces shall be permitted in order to carry all statements and information required to be on the product label.

5.1.3 All worded portions of the required product label(s) shall be printed at least in English.

5.1.4 Symbols and other pictorial graphic representations shall be permitted to be used to supplement worded statements on the product label(s).

5.1.5* The certification organization's label, symbol, or identifying mark shall be attached to the product label or shall be part of the product label. The label, symbol, or identifying mark shall be at least 6 mm (¼ in.) in height and shall be placed in a conspicuous location.

5.1.6 The following statement shall be legibly printed on the product label(s) and placed in a conspicuous location. All letters shall be at least 2 mm (1⁄16 in.) in height.

"THIS PASS MEETS THE REQUIREMENTS OF NFPA 1982, STANDARD ON PERSONAL ALERT SAFETY SYSTEMS (PASS), 2007 EDITION

DO NOT REMOVE THIS LABEL"

5.1.7 At least the following information shall also be legibly printed on the product label(s) and placed on each PASS in a user-accessible location, and all letters shall be at least 2 mm (1⁄16 in.) in height:

(1) Manufacturer name, identification, or designation
(2) Country of manufacture
(3) Model name, number, or design
(4) Identification/lot/serial number
(5) Month and year of manufacture, not coded
(6) Recommended power source type and size if user replaceable

5.1.8 PASS also shall be labeled as certified at least to the requirements for Class I, Groups C and D; and Class II, Groups E, F, and G; Division 1 hazardous locations specified in ANSI/UL 913, *Standard for Intrinsically Safe Apparatus and Associated Apparatus for Use in Class I, II, and III, Division 1 Hazardous (Classified) Locations.*

Copyright National Fire Protection Association
Provided by IHS under license with NFPA
No reproduction or networking permitted without license from IHS
Not for Resale

5.1.9 All product labels also shall meet the requirements specified in Section 7.13, Product Label Durability.

5.2 User Information.

5.2.1 The PASS manufacturer shall provide with each PASS at least the user information that is specified in 5.2.4.

5.2.2 The PASS manufacturer shall attach the required user information or packaging containing the user information to the PASS in such a manner that it is not possible to initially use the PASS without being aware of the information.

5.2.3 The required user information or packaging containing the user information shall be attached to the PASS so that a deliberate action is necessary to remove it. The PASS manufacturer shall provide notice that the user information is to be removed ONLY by the end user.

5.2.4 The PASS manufacturer shall provide at least the following instructions and information with each PASS:

(1) Pre-use information as follows:
   (a) Safety considerations
   (b) Limitations of PASS
   (c) Marking recommendations and restrictions
   (d) Warranty information
(2) Preparation for use as follows:
   (a) Preferred mounting position and orientation for optimal performance
   (b) Training instructions
   (c) Recommended storage practices
(3) Inspection frequency and details
(4) Proper use
(5) Maintenance and cleaning as follows:
   (a) Cleaning instructions and precautions
   (b) Power source testing and replacement
   (c) Adjustments, if applicable
   (d) Maintenance criteria
   (e) Painting
   (f) Decontamination procedures
(6) Retirement criteria and considerations
(7) Procedure for reporting PASS problems to the manufacturer and to the certification organization

Chapter 6 Design Requirements

6.1 General Design Requirements for PASS.

6.1.1 PASS shall have at least the applicable design requirements specified in this section where inspected and evaluated by the certification organization as specified in Section 4.3, Inspection and Testing.

6.1.2 In all instances, the design of PASS shall provide for the safety and security of the functioning of the PASS.

6.1.2.1 PASS that is designed as a self-contained, independent device contained in a single case, housing, or enclosure and that is not an integral part or parts of any item or multiple items of protective clothing, protective equipment, or both shall be designated as *stand-alone PASS*.

6.1.2.2 PASS that is designed with dispersed components as part or parts of any item or multiple items of protective clothing, protective equipment, or both and the dispersed components are not mounted, grouped, or contained in a single location nor in a single case, housing, or enclosure but with multiple cases, housings, or enclosures shall be designated as *integrated PASS*.

6.1.2.3 Where *integrated PASS* is designed and intended to be readily removed from the item or multiple items of protective clothing, protective equipment, or both so that it can also be used independently, such *integrated PASS* shall be designated as *removable integrated PASS*.

6.1.2.4 Where *integrated PASS* is not designed and not intended to be readily removed from the item or multiple items of protective clothing, protective equipment, or both so that it so that it cannot be used independently, such *integrated PASS* shall be designated as *nonremovable integrated PASS*.

6.1.3* PASS shall incorporate data logging in nonvolatile memory and, at a minimum, the following events shall be identified and recorded with the data log and shall also have a date and time stamp for each event in the data log:

(1) When the PASS is turned on
(2) When the PASS activates any alarm or pre-alarm
(3) When the PASS alarm is activated by the user
(4) When the PASS alarm was reset
(5) When the PASS was turned off
(6) When the PASS low power source warning signal activates

6.1.3.1 The data logging information shall be downloadable by the emergency services organization.

6.1.3.2 The data logging shall have a minimum capacity of logging 2000 events.

6.1.4* Where PASS designated as *stand-alone PASS* or as *integrated PASS* are secured by a retention system in a wearing position, in accordance with the manufacturer's instructions, the retention system shall not affect the proper function of the mode selection device or devices specified in Section 6.2, Mode Selection Design Requirements for PASS, and shall not affect the performance of the PASS when tested to the performance requirements specified in Chapter 7.

6.1.5* PASS power source(s) shall be isolated from the operating components to prevent damage to the components.

6.1.6 All PASS hardware finishes shall be free of all rough spots, burrs, and sharp edges.

6.1.7 All sewing thread used in the construction of PASS shall be made of inherently flame-resistant fiber.

6.2 Mode Selection Design Requirements for PASS.

6.2.1 PASS shall incorporate a mode selection device or devices to allow for operation in at least three modes: (1) *off*, (2) *alarm*, and (3) *sensing*.

6.2.2* The mode selection device(s) shall be designed to provide automatic activation from the *off* mode to the *sensing* mode without the user setting the mode selection device.

6.2.2.1 Such automatic activation shall include, but not be limited to, being linked to activation of SCBA, being linked to removal from storage or transportation positions, by pull-away tether to a fixed position, or by remote activation.

6.2.2.2 Such automatic activation shall be designed so that when PASS is automatically activated it shall be able to be manually switched from the *sensing* mode to the *alarm* mode with the mode selection device but shall not be able to be

--`,,```,,,,````-`-`,,`,,`,`,,`---

Copyright National Fire Protection Association
Provided by IHS under license with NFPA
No reproduction or networking permitted without license from IHS
Not for Resale

switched to remain in the *off* mode until the automatic activation means is also intentionally deactivated.

6.2.3 All mode selection devices shall be protected against accidental change of operation and impact damage.

6.2.4 All mode selection devices shall be rated for a service life of not fewer than 50,000 cycles.

6.2.5 All mode selection devices shall be capable of being switched to the *alarm* or *sensing* mode by a single gloved hand. The fingers of gloves utilized for this function test shall have a thickness of 2.5 mm to 4 mm (3⁄32 in. to 5⁄32 in.).

6.2.6 Only one action shall be required to switch the mode selection device(s) from any mode to *alarm*.

6.2.7 When PASS is sounding the *alarm signal*, it shall require at least two separate and distinct manual actions to silence the *alarm signal*.

6.2.7.1 Any action to silence the *alarm signal* and the actual silencing of the *alarm signal* shall not permit PASS to remain in the *off* mode.

6.2.7.2 The silencing of the *alarm signal* shall automatically reset PASS to the *sensing* mode.

6.2.8 PASS shall be provided with a light source capable of providing a visual indication of mode status as well as an audible source capable of providing an aural indication of a change in the mode selection when switching from *off* to *sensing*, *off* to *alarm*, and *alarm* to *sensing*.

6.3 Motion Sensing Design Requirements for PASS.

6.3.1 PASS shall incorporate motion sensing that shall detect motion and lack of motion of the person on whom the PASS is deployed and cause the activation of the sequence that leads to the sounding of the *alarm signal* when lack of motion is detected for the specified time.

6.3.2 PASS shall sound the *alarm signal* specified in 6.4.3 when the PASS does not sense movement for 30 seconds, +5/–0 seconds.

6.3.3 The *alarm signal* shall be preceded by a *pre-alarm signal* as specified in 6.4.2 that shall sound 10 seconds, +3/–0 seconds before the sounding of the *alarm signal*.

6.3.4 PASS motion sensing shall function regardless of the angle of deployment of the PASS.

6.3.5 PASS shall be designed so that any failure of the motion sensing function shall cause the PASS to sound the *alarm signal* as specified in 6.4.3 within 30 seconds, +5/–0 seconds of such failure. The PASS manufacturer shall submit a failure modes and effects analysis (FMEA) to the certification organization for verification of this requirement.

6.4 Signal Design Requirements for PASS.

6.4.1 *Operational* Signal.

6.4.1.1 PASS shall emit an audible *operational signal* within 1 second of completing the required action to set PASS to the *sensing* mode, indicating to the user that the device is functioning properly.

6.4.1.2 When PASS is in the *off* mode and the power source is at or below the level specified in 6.4.4.1, the *operational signal* shall not sound when PASS is switched to the *sensing* mode.

6.4.2 *Pre-Alarm Signal.*

6.4.2.1 The PASS shall have at least an audible primary *pre-alarm signal*. The primary *pre-alarm signal* shall be a distinct and different sound from the *alarm signal*.

6.4.2.2 In addition to the primary *pre-alarm signal*, other tones shall be permitted.

6.4.2.3 PASS shall be permitted to incorporate a supplementary *pre-alarm signal* or signals in addition to the audible primary pre-alarm signal to enhance the ability of the user to detect and identify the pre-alarm status. Supplementary *pre-alarm signals* shall be variable in a continuous pattern or shall be recurrent.

6.4.2.3.1 The supplementary *pre-alarm signal* shall alert senses other than hearing.

6.4.2.3.2 When activated, the supplementary *pre-alarm signal* shall not diminish the performance of the primary *pre-alarm signal* below the requirements of this standard.

6.4.2.3.3 The design of the supplementary *pre-alarm signal* shall be such that failure of the supplementary *pre-alarm signal* shall not affect the activation or operation of the primary *pre-alarm signal*.

6.4.2.4 PASS shall sound the *pre-alarm signal(s)* 10 seconds, +3/–0 seconds prior to the sounding of the alarm signal.

6.4.2.5 During the *pre-alarm signal(s)* sounding, all other audible PASS signals, other than the alarm signal, shall be rendered inactive.

6.4.2.6 PASS shall be designed to have at least a motion-induced cancellation of functioning of the *pre-alarm signal(s)* prior to the sounding of the *alarm signal*.

6.4.2.7 Cancellation of the sounding of the primary *pre-alarm signal* and cancellation of functioning of the supplementary *pre-alarm signal(s)* shall not require the use of the user's hand(s).

6.4.2.8 PASS shall reset to the sensing mode upon cancellation of the *pre-alarm signal*.

6.4.3 Alarm Signal.

6.4.3.1 PASS shall sound the *alarm signal* when switched to the *alarm* mode.

6.4.3.2 While in the *sensing* mode, PASS shall sound the *alarm signal* when activated by the motion sensing component when motion is not detected for 30 seconds, +5/–0 seconds.

6.4.3.3 When activated by the motion sensor, the *alarm signal* shall be preceded by the *pre-alarm signal*, which shall sound 10 seconds, +3/–0 seconds before the sounding of the *alarm signal*.

6.4.3.4 During the *alarm signal* sounding, all other audible PASS signals shall be rendered inactive.

6.4.3.5 The *alarm signal* shall have a duration of at least 1 hour at a sound pressure level of not less than 95 dBA.

6.4.3.6 The *alarm signal* shall be audible in a variable or non-continuous tone.

6.4.3.7 The *alarm signal*, once activated, shall not be deactivated by the motion detector.

Copyright National Fire Protection Association
Provided by IHS under license with NFPA
No reproduction or networking permitted without license from IHS
Not for Resale

6.4.3.8 Any action to silence the *alarm signal* and the actual silencing of the *alarm signal* shall not permit the PASS to remain in the *off* mode.

6.4.3.9 The silencing of the *alarm signal* shall automatically reset the PASS to the *sensing* mode.

6.4.4 ***Low Power Source Warning Signal.***

6.4.4.1 While in the *sensing mode*, PASS shall emit a recurrent audible *low power source warning signal* when the power source voltage is depleted to the level that will maintain the *alarm signal* level of at least 95 dBA for at least 1 hour.

6.4.4.2 The power source shall be discharged at a rate that is equal to the average current draw, ±10 percent of the same model PASS, while in the *alarm* mode. The rate shall be determined by measurement by the certification organization.

6.4.4.3 The *low power source warning signal* sound shall be distinct and different from the *pre-alarm signal(s)* and the *alarm signal*.

6.4.4.4 The *low power source warning signal* shall have an interval of not greater than 30 seconds.

6.4.4.5 While in the *off* mode and with the power voltage at or below the level specified in 6.4.4.1, the system that causes the activation of the *low power source warning signal* shall cancel the *operational signal* so that it shall not sound when the PASS is switched to the *sensing* mode.

Chapter 7 Performance Requirements

7.1 Sound Pressure Levels.

7.1.1 ***PASS Pre-Alarm Signal.***

7.1.1.1 PASS shall be tested for the sound pressure level of the primary *pre-alarm signal* as specified in Section 8.2, Sound Pressure Level Tests, and the primary *pre-alarm signal* shall have an initial sound pressure level of 80 dBA to 95 dBA, shall have the sound pressure level increase in at least two distinct sound pressure level increments within 6 to 10 seconds to at least 100 dBA but not exceed 110 dBA, shall have the sound pressure level remain for an additional 3 to 5 seconds at or above 100 dBA but not exceed 110 dBA, shall have the entire primary *pre-alarm signal* not sound for more than 13 seconds, and shall have PASS function properly as specified in 6.4.2.

7.1.1.2* PASS shall be tested for primary *pre-alarm signal* frequency as specified in Section 8.14, Signal Frequency Test, and shall have at least an audible signal, shall have the primary *pre-alarm signal* consist of a minimum of two primary frequencies, shall have each primary frequency not be less than 1000 Hz nor more than 2000 Hz, and shall have these frequencies sounded either sequentially or simultaneously.

7.1.2 ***PASS Alarm Signal.***

7.1.2.1 PASS shall be tested for the sound pressure level of the *alarm signal* as specified in Section 8.2, Sound Pressure Level Tests, and shall not have the *alarm signal*, once activated, be deactivated by the motion detector; shall have the *alarm signal* sound pressure level not be less than 95 dBA for an uninterrupted duration of not less than 1 hour, and shall have PASS function properly as specified in 6.4.3.

7.1.2.2 PASS shall be tested for signal frequency as specified in Section 8.14, Signal Frequency Test, and shall have the *alarm signal* consist of a minimum of three primary frequencies, at least one of which shall be 500 Hz, ±20 Hz, and at least two other frequencies shall not be less than 1000 Hz nor more than 4000 Hz; and shall have these frequencies sounded either sequentially or simultaneously.

7.1.3 PASS ***Low Power Source Warning Signal.*** PASS shall be tested for the sound pressure level of the *low power source warning signal* as specified in Section 8.2, Sound Pressure Level Tests, and shall have a sound pressure level between 70 and 100 dBA, shall have the *low power source warning signal* continue to sound for not less than 1 hour, and shall have the PASS function properly as specified in 6.4.4.

7.2 Electronic Temperature Stress. PASS shall be tested for resistance to electronic temperature stress as specified in Section 8.3, Electronic Temperature Stress Test, and shall be evaluated for proper functioning of signals as specified in 6.4.2.4 and 6.4.3.2, shall meet the proper alarm signal sound pressure level as specified in 7.1.2.1, and shall have the data logging functions specified in 6.1.3(1) through 6.1.3(6) operating properly.

7.3 Corrosion Resistance. PASS shall be tested for resistance to corrosion as specified in Section 8.4, Corrosion Test, and shall be evaluated for proper functioning of signals as specified in 6.4.2.4 and 6.4.3.2, shall meet the proper alarm signal sound pressure level as specified in 7.1.2.1, and shall have the data logging functions specified in 6.1.3(1) through 6.1.3(6) operating properly.

7.4 Immersion Leakage Resistance.

7.4.1 PASS shall be tested for resistance to leakage as specified in Section 8.5, Heat and Immersion Leakage Test, and for 8.5.5, Test Procedure 1, PASS shall be evaluated for proper functioning of signals as specified in 6.4.2.4 and 6.4.3.2, shall meet the proper *alarm signal* sound pressure level as specified in 7.1.2.1, shall have no water in its power source compartment(s), and shall have the data logging functions specified in 6.1.3(1) through 6.1.3(6) operating properly.

7.4.2 PASS shall be tested for resistance to leakage as specified in Section 8.5, Heat and Immersion Leakage Test; and for 8.5.6, Test Procedure 2, PASS shall have no water in the electronics compartment(s).

7.5 Case Integrity. PASS cases, housings, or enclosures shall be tested for integrity as specified in Section 8.6, Case Integrity Test; shall be evaluated for proper functioning of signals as specified in 6.4.2.4 and 6.4.3.2; shall meet the proper *alarm signal* sound pressure level as specified in 7.1.2.1; shall support the test weight without affecting case integrity or causing visible damage; and shall have the data logging functions specified in 6.1.3(1) through 6.1.3(6) operating properly.

7.6 Intrinsic Safety. PASS shall be tested for intrinsic safety as specified in ANSI/UL 913, *Standard for Intrinsically Safe Apparatus and Associated Apparatus for Use in Class I, II, and III, Division 1 Hazardous (Classified) Locations*, and shall meet the requirements for Class I, Groups C and D, and Class II, Groups E, F, and G, Division 1 hazardous locations.

7.7 Shock Sensitivity. PASS shall be tested for signal cancellation sensitivity as specified in Section 8.7, Shock Sensitivity Test, and the *pre-alarm signal* shall not cancel.

7.8 Impact and Vibration Resistance.

7.8.1 PASS shall be tested for resistance to impact as specified in Section 8.8, Impact Acceleration Resistance Test, and shall

Copyright National Fire Protection Association
Provided by IHS under license with NFPA
No reproduction or networking permitted without license from IHS
Not for Resale

be evaluated for proper functioning of signals as specified in 6.4.2.4 and 6.4.3.2; shall meet the proper alarm signal sound pressure level as specified in 7.1.2.1; and shall have the data logging functions specified in 6.1.3(1) through 6.1.3(6) operating properly.

7.8.2 PASS shall be tested for resistance to vibration as specified in Section 8.9, Vibration Test, and shall be evaluated for proper functioning of signals as specified in 6.4.2.4 and 6.4.3.2; shall meet the proper alarm signal sound pressure level as specified in 7.1.2.1; and shall have the data logging functions specified in 6.1.3(1) through 6.1.3(6) operating properly.

7.8.3 PASS shall be tested for resistance to vibration as specified in Section 8.16, Tumble–Vibration Test, and shall be evaluated for proper functioning of signals as specified in 6.4.2.4 and 6.4.3.2; shall meet the proper alarm signal sound pressure level as specified in 7.1.2.1; and shall have the data logging functions specified in 6.1.3(1) through 6.1.3(6) operating properly.

7.9 Retention System. PASS shall be tested for durability of the retention system as specified in Section 8.10, Retention System Test, and the retention system shall withstand the applied force without separating.

7.10 Water Drainage. PASS shall be tested for water drainage as specified in Section 8.11, Water Drainage Test, and the alarm signal sound pressure level shall be at least 95 dBA.

7.11 Heat Resistance. PASS shall be tested for resistance to heat as specified in Section 8.12, High Temperature Functionality Test, and shall be evaluated for proper functioning of signals as specified in 6.4.2.4 and 6.4.3.2, shall have the sound pressure level not be less than 95 dBa, shall have the data logging functions specified in 6.1.3(1) through 6.1.3(5) operating properly, and shall not melt, drip, or ignite.

7.12 Heat and Flame Resistance.

7.12.1 PASS shall be tested for resistance to heat and flame as specified in Section 8.13, Heat and Flame Test, Test Procedure 1, and shall not have the afterflame exceed 2.2 seconds; shall have nothing fall off the PASS; shall not have the PASS fall from its mounted position; and the PASS shall function as follows:

(1) The *alarm signal* shall sound and continue to sound as specified in 6.4.3.
(2) The *alarm signal* shall meet the sound pressure levels as specified 7.1.2.1.
(3) At least two separate and distinct manual actions shall be required to change the mode selection device from *alarm* to *sensing* in order to silence the alarm as specified in 6.2.7.
(4) The data logging functions specified in 6.1.3(1) through 6.1.3(6) shall operate properly.

7.12.2 PASS shall be tested for resistance to heat and flame as specified in Section 8.13, Heat and Flame Test, Test Procedure 2, and shall not have the afterflame exceed 2.2 seconds; shall have nothing fall off the PASS; shall not have the PASS fall from its mounted position; and the PASS shall function as follows:

(1) PASS shall emit the *operational signal* as specified in 6.4.1.
(2) PASS shall cycle from *sensing* to *pre-alarm* as specified in Section 6.3, Motion Sensing Design Requirements for PASS.
(3) The primary *pre-alarm signal* shall sound as specified in 6.4.2.
(4) PASS shall cycle from *pre-alarm* to *alarm* as specified in Section 6.3, Motion Sensing Design Requirements for PASS.
(5) The *alarm signal* shall sound as specified in 6.4.3.
(6) At least two separate and distinct manual actions shall be required to change the mode selection device from *alarm* to *sensing* in order to silence the alarm as specified in 6.2.7.
(7) The primary *pre-alarm signal* sound pressure level shall be as specified in 7.1.1.1, and supplementary *pre-alarm signals* shall function as designed.
(8) The *alarm signal* sound pressure level shall be as specified in 7.1.2.1.
(9) The data logging functions specified in 6.1.3(1) through 6.1.3(6) shall operate properly.

7.12.3 PASS shall be tested for resistance to heat and flame as specified in Section 8.13, Heat and Flame Test, Test Procedure 3, and shall not have the afterflame exceed 2.2 seconds, shall have nothing fall off the PASS; shall not have the PASS fall from its mounted position; and the PASS shall function as follows:

(1) PASS shall emit the *operational signal* as specified in 6.4.1.
(2) The mode selection device shall be capable of being switched from *sensing* to *alarm* as specified in 6.2.5 and 6.2.6.
(3) The *alarm signal* shall sound as specified in 6.4.3.
(4) At least two separate and distinct manual actions shall be required to change the mode selection device from *alarm* to *sensing* in order to silence the alarm as specified in 6.2.7.
(5) The primary *pre-alarm signal* sound pressure level shall be as specified in 7.1.1.1, and supplementary *pre-alarm signals* shall function as designed.
(6) The *alarm signal* sound pressure level shall be as specified in 7.1.2.1.
(7) The data logging functions specified in 6.1.3(1) through 6.1.3(6) shall operate properly.

7.13 Product Label Durability. PASS with product labels attached shall be tested for durability and legibility as specified in Section 8.15, Product Label Durability Test, and the product labels shall remain attached to the PASS and shall be legible to the unaided eye.

7.14 Alarm Signal Muffle Test. PASS shall be tested for resistance to sound pressure level deadening or muffling as specified in Section 8.17, PASS Alarm Signal Muffle Test, and shall have the sound pressure level not be less than 95 dBA.

Chapter 8 Test Methods

8.1 Sample Preparation.

8.1.1 Application.

8.1.1.1 The sample preparation procedures contained in this section shall apply to each test method in this chapter, as specifically referenced in the sample preparation section of each test method.

8.1.1.2 Only the specific sample preparation procedure or procedures referenced in the sample preparation section of each test method shall be applied to that test method.

8.1.2 Room Temperature Conditioning Procedure.

8.1.2.1 Samples shall be conditioned at a temperature of 22°C, ±3°C (72°F, ±5°F) and relative humidity (RH) of 50 percent, ±25 percent for at least 4 hours.

Copyright National Fire Protection Association
Provided by IHS under license with NFPA
No reproduction or networking permitted without license from IHS
Not for Resale

8.1.2.2 Samples shall be tested within 5 minutes after removal from conditioning.

8.1.3 Cold Temperature Conditioning Procedure.

8.1.3.1 Specimens shall be exposed to a temperature of −20°C, +0/−3°C (−4°F, +0/−5°F) for at least 4 hours.

8.1.3.2 Testing shall begin within 30 seconds of the specimens being removed from the conditioning.

8.1.4 Elevated Temperature Conditioning Procedure.

8.1.4.1 Specimens shall be exposed to a temperature of 71°C, +1/−0°C (160°F, +2/−0°F) for at least 4 hours.

8.1.4.2 Testing shall begin within 30 seconds of the specimens being removed from the conditioning.

8.2 Sound Pressure Level Tests.

8.2.1 Application.

8.2.1.1 This test method shall apply to all PASS.

8.2.1.2 Modifications to this test method for testing *pre-alarm signals* shall be as specified in 8.2.9.

8.2.1.3 Modifications to this test method for testing *alarm signals* shall be as specified in 8.2.8.

8.2.1.4 Modifications to this test method for testing *low power source warning signals* shall be as specified in 8.2.10.

8.2.2 Samples.

8.2.2.1 Samples shall be complete PASS.

8.2.2.2 Samples shall be conditioned as specified in 8.1.2.

8.2.3 Specimens.

8.2.3.1 Specimens for testing shall be complete PASS.

8.2.3.2 A minimum of three specimens shall be tested.

8.2.4 Apparatus.

8.2.4.1 Where the audio test mannequin is specified, the test mannequin shall be a Central Display, Inc., Model MA32 medium-size mannequin or equivalent.

8.2.4.2 The audio test mannequin shall have the sound level meter microphone mounted at the left ear, as shown in Figure 8.2.4.2.

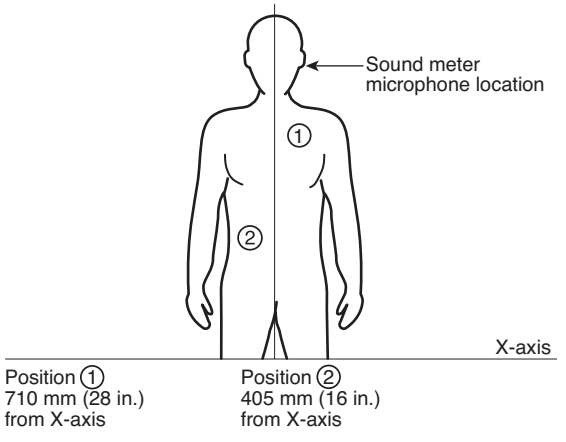

FIGURE 8.2.4.2 Audio Test Mannequin.

8.2.4.3 The test chamber shall be as specified in ANSI S1.13, *Methods for Measurement of Sound Pressure Level.*

8.2.5 Procedure.

8.2.5.1 Specimens shall be tested for sound pressure levels of the signals in accordance with ANSI S1.13, *Methods for Measurement of Sound Pressure Level.*

8.2.5.2 The laboratory measurement defined in ANSI S1.13, *Methods for Measurement of Sound Pressure Level,* shall be used for these tests.

8.2.5.3 All sound pressure level measurements shall be made with the sound level meter ballistics set to the peak response setting.

8.2.6 Report.

8.2.6.1 The alarm signal sound pressure level after testing as specified in 8.2.8 shall be measured, recorded, and reported.

8.2.6.2 The pre-alarm signal sound pressure level after testing as specified in 8.2.9 shall be measured, recorded, and reported.

8.2.6.3 The low power source warning signal sound pressure level after testing as specified in 8.2.10 shall be measured, recorded, and reported.

8.2.7 Interpretation.

8.2.7.1 Pass or fail performance shall be determined for each specimen.

8.2.7.2 One or more specimens failing any portion of this test shall constitute failing performance.

8.2.8 Specific Requirements for Testing *Alarm Signals*.

8.2.8.1 The sound pressure level for the *alarm signal* shall be measured in a spherical radius at a distance of 3 m (9.9 ft) in from the specimen's annunciator.

8.2.8.2 Before starting the test, the specimen's power source voltage shall be discharged to the level at which the PASS first emits the *low power source warning signal* specified in 6.4.4.

8.2.8.3 The power source voltage shall be discharged at a rate that is equal to the average current draw, ±10 percent, of the same model PASS while in the operational condition that uses maximum current. The rate shall be determined by measurement by the certification organization.

8.2.8.4 The sound pressure level for the *alarm signal* shall be measured for 60 minutes, +5/−0 minutes.

8.2.8.5 The *alarm signal* sound pressure level shall be recorded, evaluated, and reported for the entire duration to determine pass or fail performance.

8.2.9 Specific Requirements for Testing *Pre-Alarm Signals*.

8.2.9.1 The specimen shall be mounted on the audio test mannequin in the preferred mounting position and orientation for optimal performance as specified by the manufacturer.

8.2.9.2 Before the test is started, the specimen's power source voltage shall be discharged to the level at which the PASS first emits the low power source warning signal specified in Section 6.4.4.

8.2.9.3 Power sources shall be discharged at a rate that is equal to the average current draw, ±10 percent, of the same model PASS while in the operating condition that uses

Copyright National Fire Protection Association
Provided by IHS under license with NFPA
No reproduction or networking permitted without license from IHS
Not for Resale

maximum current. The rate shall be determined by measurement by the certification organization.

8.2.9.4 The sound pressure level for the *pre-alarm signal* shall be measured at the left ear of the mannequin for the duration of the pre-alarm.

8.2.9.5 The *pre-alarm signal* sound pressure level shall be recorded, evaluated, and reported for the entire duration to determine pass or fail performance.

8.2.10 Specific Requirements for Testing *Low Power Source Warning Signal*.

8.2.10.1 Specimens shall be mounted on the audio test mannequin in the preferred mounting position and orientation for optimal performance as specified by the PASS manufacturer.

8.2.10.2 Before the test is started, the specimen's power supply voltage shall be discharged to the level at which the specimen first emits the *low power source warning signal* specified in 6.4.4.

8.2.10.3 The power source shall be discharged at a rate that is equal to the average current draw, ±10 percent of the same model PASS, while in the operational condition that uses maximum current. The rate shall be determined by measurement by the certification organization.

8.2.10.4 The sound pressure level for the *low power source warning signal* shall be measured at the left ear of the mannequin for 60 minutes, +5/−0 minutes.

8.2.10.5 The *low power source warning signal* sound pressure level shall be recorded, evaluated, and reported for the entire duration to determine pass or fail performance.

8.3 Electronic Temperature Stress Test.

8.3.1 Application. This test method shall apply to all PASS.

8.3.2 Samples.

8.3.2.1 Samples shall be complete PASS.

8.3.2.2 Samples shall be conditioned as specified in 8.1.2.

8.3.3 Specimens.

8.3.3.1 Specimens for testing shall be complete PASS.

8.3.3.2 A minimum of three specimens shall be tested.

8.3.4 Procedure.

8.3.4.1 Each specimen shall be subjected to a series of three temperature stress tests identified as 8.3.5, Test Procedure 1, for elevated temperature, 8.3.6, Test Procedure 2, for low operating temperature, and 8.3.7, Test Procedure 3, for temperature shock.

8.3.4.2 The same three specimens shall be used for all three test series. Each specimen tested shall be complete with power source.

8.3.4.3 The test chamber or cabinet shall be capable of maintaining the required conditions specified in 8.3.5, 8.3.6, and 8.3.7 throughout the envelope of air surrounding the specimen being tested, and these conditions shall be continuously monitored.

8.3.4.4 Following each test procedure, the specimen shall be allowed to stabilize at ambient conditions prior to proceeding to the next test procedure.

8.3.5 Test Procedure 1.

8.3.5.1 Specimens shall be placed in the test apparatus that has been stabilized at 49°C, +3/−0°C (120°F, +5/−0°F).

8.3.5.2 After 6 hours, the temperature shall be raised within 1 hour to 71°C, +3/−0°C (160°F, +5/−0°F) and maintained for 4 hours.

8.3.5.3 The temperature shall then be decreased within 1 hour to 49°C, +3/−0°C (120°F, +5/−0°F).

8.3.5.4 This cycle shall be repeated twice.

8.3.5.5 After the second cycle, the temperature shall be raised to 71°C, +3/−0°C (160°F, +5/−0°F) for 4 hours.

8.3.5.6 Specimens shall be removed following the specified conditioning, and testing shall begin within 30 seconds of removal from conditioning.

8.3.5.7 Specimens shall be operated according to the manufacturer's instructions to determine the proper functioning as specified in 6.4.2.4 and 6.4.3.2.

8.3.5.8 The *alarm signal* sound pressure level shall be measured as specified in 7.1.2 to determine pass or fail performance.

8.3.5.9 Specimens shall be operated according to the manufacturer's instructions to determine the proper functioning for data logging as specified in 6.1.3 to determine pass or fail performance.

8.3.6 Test Procedure 2.

8.3.6.1 Specimens shall be placed in the test apparatus that has been stabilized at −20°C, +0/−3°C (−4°F, +0/−5°F) and maintained for a minimum of 4 hours.

8.3.6.2 Specimens shall be removed following the specified conditioning, and testing shall begin within 30 seconds of removal from conditioning.

8.3.6.3 Specimens shall be operated according to the manufacturer's instructions to determine the proper functioning as specified in 6.4.2.4 and 6.4.3.2.

8.3.6.4 The *alarm signal* sound pressure level shall be measured as specified in 7.1.2 to determine pass or fail performance.

8.3.6.5 Specimens shall be operated according to the manufacturer's instructions to determine the proper functioning for data logging as specified in 6.1.3 to determine pass or fail performance.

8.3.7 Test Procedure 3.

8.3.7.1 Specimens shall be placed in the test apparatus that has been stabilized at −20°C, +0/−3°C (−4°F, +0/−5°F) cold condition for 4 hours.

8.3.7.2 Specimens shall be removed from the cold condition and shall be placed within 5 minutes into another test apparatus that has been stabilized at 71°C, +3/−0°C (160°F, +5/−0°F) hot condition for 4 hours.

8.3.7.3 The cold-to-hot cycle shall be repeated twice.

8.3.7.4 Specimens shall be removed following the specified conditioning, and testing shall begin within 30 seconds of removal from conditioning.

8.3.7.5 Specimens shall be operated according to the manufacturer's instructions to determine the proper functioning as specified in 6.4.2.4 and 6.4.3.2.

Copyright National Fire Protection Association
Provided by IHS under license with NFPA
No reproduction or networking permitted without license from IHS
Not for Resale

8.3.7.6 The *alarm signal* sound pressure level shall be measured as specified in 7.1.2 to determine pass or fail performance.

8.3.7.7 Specimens shall be operated according to the manufacturer's instructions to determine the proper functioning for data logging as specified in 6.1.3 to determine pass or fail performance.

8.3.8 Report.

8.3.8.1 The specimen *alarm signal* sound pressure level shall be measured, recorded, and reported.

8.3.8.2 The functioning of the specimens shall be recorded and reported.

8.3.9 Interpretation.

8.3.9.1 Pass or fail performance shall be determined for each specimen.

8.3.9.2 One or more specimens failing this test shall constitute failing performance.

8.4 Corrosion Resistance Test.

8.4.1 Application. This test method shall apply to all PASS.

8.4.2 Samples.

8.4.2.1 Samples shall be complete PASS.

8.4.2.2 Samples shall be conditioned as specified in 8.1.2.

8.4.3 Specimens.

8.4.3.1 Specimens for testing shall be complete PASS.

8.4.3.2 A minimum of three specimens shall be tested.

8.4.4 Procedure.

8.4.4.1 Specimens shall be tested in accordance with ASTM B 117, *Standard Practice for Operating Salt Spray (Fog) Apparatus*; the salt spray shall be 5 percent saline solution; and the test exposure shall be for 48 hours, +30/−0 minutes.

8.4.4.2 The chamber shall be stabilized at a temperature of 35°C, +3/−0°C (95°F, +5/−0°F).

8.4.4.3 Specimens shall be placed in the chamber as if worn by a user, in a wearing position specified by the manufacturer.

8.4.4.4 At the conclusion of the salt spray period, the specimen shall be stored in an environment of 22°C, ±3°C (72°F, ±5°F) at 50 percent, ±5 percent RH for a minimum of 48 hours.

8.4.4.5 Following the conditioning period, specimens shall be tested within 30 seconds of removal from conditioning.

8.4.4.6 Specimens shall be operated according to the manufacturer's instructions to determine the proper functioning as specified in 6.4.2.4 and 6.4.3.2.

8.4.4.7 The *alarm signal* sound pressure level shall be measured as specified in 7.1.2 to determine pass or fail performance.

8.4.4.8 Specimens shall be operated according to the manufacturer's instructions to determine the proper functioning for data logging as specified in 6.1.3 to determine pass or fail performance.

8.4.5 Report.

8.4.5.1 The specimen *alarm signal* sound pressure level shall be measured, recorded, and reported.

8.4.5.2 The functioning of the specimens shall be recorded and reported.

8.4.6 Interpretation.

8.4.6.1 Pass or fail performance shall be determined for each specimen.

8.4.6.2 One or more specimens failing this test shall constitute failing performance.

8.5 Heat and Immersion Leakage Test.

8.5.1 Application. This test method shall apply to all PASS.

8.5.2 Samples.

8.5.2.1 Samples shall be complete PASS.

8.5.2.2 Samples shall be conditioned as specified in 8.1.2.

8.5.3 Specimens.

8.5.3.1 Specimens for testing shall be complete PASS.

8.5.3.2 A minimum of three specimens shall be tested.

8.5.4 Apparatus.

8.5.4.1 A test oven having minimum dimensions of 915 mm depth × 915 mm width × 1220 mm height (36 in. depth × 36 in. width × 48 in. height) shall be provided.

8.5.4.1.1 The test oven shall have an airflow rate of 38 m/min to 76 m/min (125 ft/min to 250 ft/min) at the standard temperature and pressure of 21°C (70°F) at 1 atmosphere measured at the center point of the oven.

8.5.4.1.2 A test thermocouple shall be positioned so that it is level with the horizontal centerline of a mounted specimen.

8.5.4.2 A test water container capable of covering the uppermost point of the specimen with a depth of 1.5 m (4.9 ft) of water shall be provided.

8.5.4.2.1 The water container shall maintain the PASS at that depth.

8.5.4.2.2 The water temperature shall be 18°C, ±10°C (64°F, ±18°F).

8.5.5 Test Procedure 1.

8.5.5.1 Specimens shall be placed in the test oven that has been preheated to 177°C, +5/−0°C (350°F, +10/−0°F). Test exposure time of 15 minutes shall begin.

8.5.5.2 After the test exposure time of 15 minutes, the specimens shall be removed from the oven and within 30 seconds shall be immersed in the test water container for 15 minutes. After 15 minutes, the specimens shall be removed from the test water container and shall be wiped dry.

8.5.5.3 Specimens shall be subject to 8.5.5.1 and 8.5.5.2 for six complete cycles.

8.5.5.4 After the sixth cycle, the power source compartment of the specimens shall be opened and shall be inspected for water leakage to determine pass or fail performance. Where the PASS does not fail this portion of the test, the power source shall be replaced.

8.5.5.5 After the sixth cycle, the specimens shall be operated according to the manufacturer's instructions to determine the proper functioning as specified in Section 6.4, Signal Design Requirements for PASS.

--`,,```,,,,````-`-`,,`,,`,`,,`---

Copyright National Fire Protection Association
Provided by IHS under license with NFPA
No reproduction or networking permitted without license from IHS
Not for Resale

8.5.5.6 After the sixth cycle, the specimens' *alarm signal* sound pressure level shall be measured as specified in 7.1.2.1 to determine pass or fail performance.

8.5.5.7 Specimens shall be operated according to the manufacturer's instructions to determine the proper functioning for data logging as specified in 6.1.3 to determine pass or fail performance.

8.5.6 Test Procedure 2.

8.5.6.1 Following Test Procedure 1, the specimens shall be reimmersed in the test water container for an additional 5 minutes, +30/–0 seconds. The power source compartment(s) shall be open, and the power source shall not be installed.

8.5.6.2 After the 5-minute immersion, the specimens shall be removed from the test water container and shall be wiped dry.

8.5.6.3 The electronic compartment(s) of the specimens shall be opened and inspected for water leakage to determine pass or fail performance.

8.5.7 Report.

8.5.7.1 For Test Procedure 1, the specimen alarm signal sound pressure level shall be measured, recorded, and reported.

8.5.7.2 For test procedure 1, the functioning of the specimens shall be recorded and reported.

8.5.7.3 Following each test procedure, any water leakage shall be reported and recorded.

8.5.8 Interpretation.

8.5.8.1 Pass or fail performance shall be determined for each specimen.

8.5.8.2 One or more specimens failing any portion of this test shall constitute failing performance.

8.6 Case Integrity Test.

8.6.1 Application. This test method shall apply to all PASS.

8.6.2 Samples.

8.6.2.1 Samples shall be complete PASS.

8.6.2.2 Samples shall be conditioned as specified in 8.1.2.

8.6.3 Specimens.

8.6.3.1 Specimens for testing shall be complete PASS.

8.6.3.2 A minimum of three specimens for PASS that meet the criteria specified in 6.1.2.1 shall be tested.

8.6.3.3 A minimum of three specimens shall be tested for each containment case, housing, and enclosure for PASS that meet the criteria specified in 6.1.2.2, 6.1.2.3, or 6.1.2.4.

8.6.4 Procedure.

8.6.4.1 Specimens shall be subjected to a test weight of 200 kg, +2/–0 kg (442 lb, +4.4/–0 lb).

8.6.4.2 The test weight shall be placed on each surface of the specimen case, housing, or enclosure.

8.6.4.3 The test weight shall be placed so as to avoid impact loading.

8.6.4.4 The test weight shall remain on each surface of the specimen case for 1 minute, +15/–0 seconds.

8.6.4.5 After removal of the test weight, each surface of the specimen case, housing, and enclosure shall be examined for damage.

8.6.4.6 Signal testing shall begin within 30 seconds following the final inspection of the case, housing, and enclosure.

8.6.4.7 Specimens shall be operated according to the manufacturer's instructions to determine the proper functioning as specified in 6.4.2.4 and 6.4.3.2.

8.6.4.8 The specimens' *alarm signal* sound pressure level shall be measured as specified in 7.1.2 to determine pass or fail performance.

8.6.4.9 Specimens shall be operated according to the manufacturer's instructions to determine the proper functioning for data logging as specified in 6.1.3 to determine pass or fail performance.

8.6.5 Report.

8.6.5.1 The specimen *alarm signal* sound pressure level shall be measured, recorded, and reported.

8.6.5.2 The functioning of the specimens shall be recorded and reported.

8.6.5.3 Any visible damage to the specimen case shall be recorded and reported.

8.6.6 Interpretation.

8.6.6.1 Pass or fail performance shall be determined for each specimen.

8.6.6.2 One or more specimens failing this test shall constitute failing performance.

8.7 Shock Sensitivity Test.

8.7.1 Application. This test method shall apply to all PASS.

8.7.2 Samples.

8.7.2.1 Samples shall be complete PASS.

8.7.2.2 Samples shall be conditioned as specified in 8.1.2.

8.7.3 Specimens.

8.7.3.1 Specimens for testing shall be complete PASS.

8.7.3.2 A minimum of three specimens shall be tested.

8.7.4 Apparatus.

8.7.4.1 A granite surface place with minimum dimensions of 305 mm width × 305 mm length × 75 mm thickness (12 in. × 12 in. × 3 in.) shall be used as the test surface.

8.7.4.2 A 10 mm (⅜ in.) I.D. × 150 mm (6 in.) long tube shall be used as a guide for the ball drop.

8.7.4.3 A stainless steel test ball measuring 8 mm (5⁄16 in.) O.D. shall be used.

8.7.5 Procedure.

8.7.5.1 Specimens shall be subjected to one test series conducted on each test orientation as specified in Figure 8.7.5.1. A single test series shall consist of the test ball being dropped three times.

8.7.5.2 Specimens shall be placed in direct contact on the granite test surface and secured in such a manner to prevent movement of the specimen during the test. The method of securing the specimen shall not interfere with the surface being tested.

--`,,```,,,,````-`-`,,`,,`,`,,`---

Copyright National Fire Protection Association
Provided by IHS under license with NFPA
No reproduction or networking permitted without license from IHS
Not for Resale

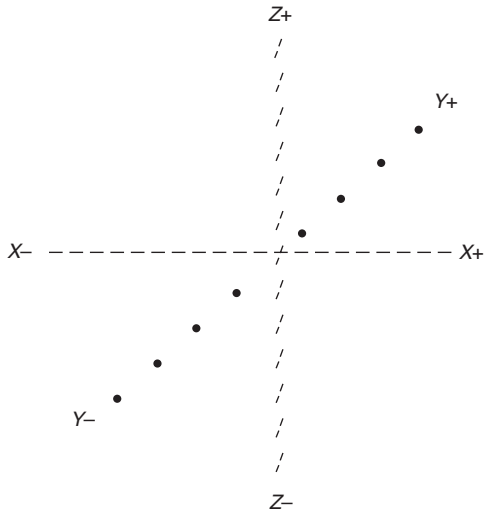

FIGURE 8.7.5.1 Test Orientation.

8.7.5.3 Specimens shall be placed in the sensing mode. The testing shall be conducted during the sounding of the *pre-alarm signal*.

8.7.5.4 The guide tube shall be positioned in a vertical orientation over the center of the surface of the specimen, with the long axis perpendicular within ±2 degrees. The bottom of the tube shall be within 3 mm (⅛ in) of the surface of the specimen but shall not touch the specimen.

8.7.5.5 The stainless steel test ball shall be held at the top of the tube, then dropped through the tube and allowed to fall on the surface of the specimen.

8.7.5.6 The sounding of the specimen *pre-alarm signal* shall be monitored to determine pass or fail performance.

8.7.6 Report.

8.7.6.1 The sounding of the *pre-alarm signal* during testing shall be recorded and reported.

8.7.6.2 Any cancellation of the *pre-alarm signal* during testing shall be recorded and reported.

8.7.7 Interpretation.

8.7.7.1 Pass or fail performance shall be determined for each specimen.

8.7.7.2 Cancellation of the *pre-alarm signal* as a result of the ball drop shall constitute failure.

8.7.7.3 One or more specimens failing any portion of this test shall constitute failing performance.

8.8 Impact Acceleration Resistance Test.

8.8.1 Application.

8.8.1.1 This test method shall apply to stand-alone and removable integrated PASS.

8.8.1.2 This test method shall not apply to nonremovable integrated PASS.

8.8.2 Samples.

8.8.2.1 Samples shall be complete PASS.

8.8.2.2 Samples shall be conditioned as specified in 8.1.2.

8.8.3 Specimens.

8.8.3.1 Specimens for testing shall be complete PASS.

8.8.3.2 A minimum of three specimens shall be tested.

8.8.3.3 Specimens of removable integrated PASS shall have the PASS removed from the integrated attachment so that the PASS alone is tested.

8.8.4 Procedure.

8.8.4.1 Three specimens shall be subjected to a series of impact–acceleration tests.

8.8.4.1.1 One specimen shall be conditioned as specified in 8.1.2.

8.8.4.1.2 One specimen shall be conditioned as specified in 8.1.3.

8.8.4.1.3 One specimen shall be conditioned as specified in 8.1.4.

8.8.4.2 Each specimen tested shall be complete with power supply.

8.8.4.3 After conditioning, specimens shall be turned to the *on* position. Testing shall begin within 30 seconds of removal from conditioning.

8.8.4.4 For each conditioning, the specimens shall be dropped a total of eight times from a distance of 3 m, +0.1/–0 m (118 in., +4/–0 in.) onto a concrete surface so that impact is on each face, on one corner, and one edge of the specimen. The specimens shall not be permitted to bounce a second time.

8.8.4.5 Following each drop, the specimen shall remain motionless and shall sound the *pre-alarm signal* and the *alarm signal* from the *sensing mode* to evaluate proper functioning as specified in Section 6.3, Motion Sensing Design Requirements for PASS, for determining pass or fail performance, after which the *alarm signal* shall be stopped and the specimen reset to *sensing mode* for the next drop.

8.8.4.6 The entire single series of drops shall be completed within 10 minutes of removal from conditioning.

8.8.4.7 Following the entire single series of drops, the specimen's *alarm signal* testing shall begin within 30 seconds.

8.8.4.8 Specimens shall be operated according to the manufacturer's instructions to determine the proper functioning as specified in 6.4.2.4 and 6.4.3.2.

8.8.4.9 The *alarm signal* sound pressure level shall be measured as specified in 7.1.2 to determine pass or fail performance.

8.8.4.10 Specimens shall be operated according to the manufacturer's instructions to determine the proper functioning for data logging as specified in 6.1.3 to determine pass or fail performance.

8.8.5 Report.

8.8.5.1 The specimen *alarm signal* sound pressure level shall be measured, recorded, and reported.

8.8.5.2 The functioning of the specimens shall be recorded and reported.

Copyright National Fire Protection Association
Provided by IHS under license with NFPA
No reproduction or networking permitted without license from IHS
Not for Resale

8.8.6 Interpretation.

8.8.6.1 Pass or fail performance shall be determined for each specimen.

8.8.6.2 One or more specimens failing this test shall constitute failing performance.

8.9 Vibration Resistance Test.

8.9.1 Application. This test method shall apply to all PASS.

8.9.2 Samples.

8.9.2.1 Samples shall be complete PASS.

8.9.2.2 Samples shall be conditioned as specified in 8.1.2.

8.9.3 Specimens.

8.9.3.1 Specimens for testing shall be complete PASS.

8.9.3.2 A minimum of three specimens shall be tested.

8.9.3.3 Integrated PASS shall be tested with the PASS in the integrated configuration.

8.9.4 Apparatus.

8.9.4.1 Specimens shall be tested on a typical package tester within the compartments specified in 8.9.4.2.

8.9.4.2 Compartments shall be configured as specified in Figure 8.9.4.2(a) and Figure 8.9.4.2(b).

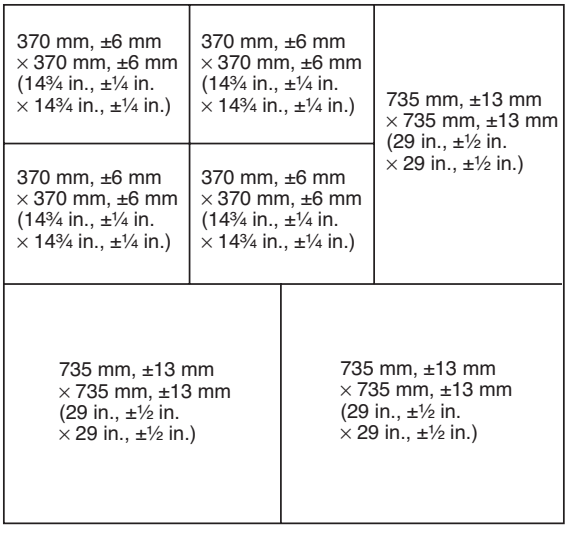

FIGURE 8.9.4.2(a) Vibration Table Compartments: Top View (Not to Scale).

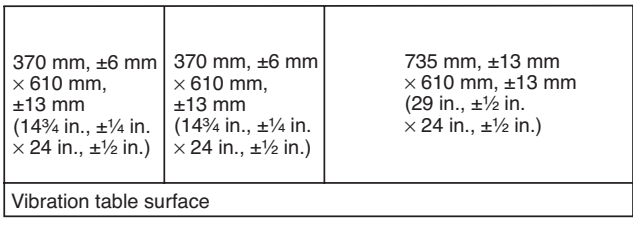

FIGURE 8.9.4.2(b) Vibration Table Compartments: Side View (Not to Scale).

8.9.4.3 The sides and the base of the compartments shall be constructed of nominal 6 mm (¼ in.) stainless steel, and the top of the compartments shall remain open.

8.9.4.4 There shall be no burrs, sharp edges, surface discontinuities, or fasteners on the internal surfaces of the holding boxes.

8.9.4.5 The large compartments shall be utilized for integrated PASS.

8.9.4.6 The small compartments shall be utilized for stand-alone PASS.

8.9.5 Procedure.

8.9.5.1 The integrated PASS or the stand-alone PASS shall be placed unrestrained in the compartments specified in 8.9.4.5 or 8.9.4.6 as applicable, and all adjustments, where present, shall be fully extended.

8.9.5.2 No tie-downs shall be allowed to be made to the specimens.

8.9.5.3 The basic movement of the bed of the test table shall be a 25 mm (1 in.) orbital path, such as can be obtained on a standard package tester operating in synchronous mode at 250 rpm, ±5 rpm.

8.9.5.4 The test duration shall be 3 hours, +5/−0 minutes.

8.9.5.5 Specimens shall be operated according to the manufacturer's instructions to determine the proper functioning as specified in 6.4.2.4 and 6.4.3.2.

8.9.5.6 The *alarm signal* sound pressure level shall be measured as specified in 7.1.2 to determine pass or fail performance.

8.9.5.7 Specimens shall be operated according to the manufacturer's instructions to determine the proper functioning for data logging as specified in 6.1.3 to determine pass or fail performance.

8.9.6 Report.

8.9.6.1 The specimen *alarm signal* sound pressure level shall be measured, recorded, and reported.

8.9.6.2 The functioning of the specimens shall be recorded and reported.

8.9.7 Interpretation.

8.9.7.1 Pass or fail performance shall be determined for each specimen.

8.9.7.2 One or more specimens failing this test shall constitute failing performance.

8.10 Retention System Test.

8.10.1 Application.

8.10.1.1 This test method shall apply to stand-alone and removable integrated PASS with a retention system.

8.10.1.2 This test method shall not apply to nonremovable integrated PASS.

8.10.2 Samples.

8.10.2.1 Samples shall be complete PASS.

8.10.2.2 Samples shall be conditioned as specified in 8.1.2.

Copyright National Fire Protection Association
Provided by IHS under license with NFPA
No reproduction or networking permitted without license from IHS
Not for Resale

8.10.3 Specimens.

8.10.3.1 Specimens for testing shall be complete PASS.

8.10.3.2 A minimum of three specimens shall be tested.

8.10.4 Procedure.

8.10.4.1* Prior to testing, specimens shall have the retention system attachment method cycled 500 times.

8.10.4.2 Specimens shall be placed in a test stand capable of applying a load to the retention system.

8.10.4.3 A base load of 45 N, +3/−0 N (10 lbf, +0.7/−0 lbf) shall be applied to the retention system.

8.10.4.4 A force shall then be steadily applied from the base load of 45 N (10 lbf) at a rate between 9 N/sec (2 lbf/sec) and 45 N/sec (10 lbf/sec). The force shall be applied perpendicular to the plane of the specimen as it is intended to be worn, in accordance with the manufacturer's instructions.

8.10.4.5 The force shall be applied until 445 N, +9/−0 N (100 lbf, +2/−0 lbf) is attained, and then the force shall be released.

8.10.4.6 Specimens shall then be inspected for retention system separation.

8.10.5 Report. Any separation of the retention system shall be recorded and reported.

8.10.6 Interpretation.

8.10.6.1 Pass or fail performance shall be determined for each specimen.

8.10.6.2 One or more specimens failing this test shall constitute failing performance.

8.11 Water Drainage Test.

8.11.1 Application. This test method shall apply to all PASS.

8.11.2 Samples.

8.11.2.1 Samples shall be complete PASS.

8.11.2.2 Samples shall be conditioned as specified in 8.1.2.

8.11.3 Specimens.

8.11.3.1 Specimens for testing shall be complete PASS.

8.11.3.2 A minimum of three specimens shall be tested.

8.11.4 Procedure.

8.11.4.1 Specimens shall be subjected to two water drainage tests.

8.11.4.1.1 The first test shall have the specimens positioned with the annunciator oriented in the position it is intended to be worn, in accordance with the manufacturer's instructions.

8.11.4.1.2 The second test shall have the specimens positioned with the annunciator oriented horizontally and facing up.

8.11.4.2 Water shall be introduced into all openings, indentations, and grilles of the specimens until water overflows from each such opening, indentation, and grille.

8.11.4.3 The filling method shall ensure that no air bubbles remain in any of the openings, indentations, and grilles.

8.11.4.4 Specimens shall then be placed in the *alarm* mode and allowed to sound the *alarm signal* for at least 65 seconds without the specimen being moved.

8.11.4.5 The *alarm signal* sound pressure level shall be measured as specified in 7.1.2 for the duration of the test.

8.11.4.6 The *alarm signal* sound pressure level shall be measured and recorded at the 60 second, +5/−0 seconds, mark to determine pass or fail performance.

8.11.5 Report. The specimen *alarm signal* sound pressure level shall be measured, recorded, and reported.

8.11.6 Interpretation.

8.11.6.1 Pass or fail performance shall be determined for each specimen.

8.11.6.2 One or more specimens failing this test shall constitute failing performance.

8.12 High Temperature Functionality Test.

8.12.1 Application. This test method shall apply to all PASS.

8.12.2 Samples.

8.12.2.1 Samples shall be complete PASS.

8.12.2.2 Samples shall be conditioned as specified in 8.1.2.

8.12.3 Specimens.

8.12.3.1 Specimens for testing shall be complete PASS.

8.12.3.2 A minimum of three specimens shall be tested.

8.12.3.3 Integrated PASS shall be tested with the PASS in the integrated configuration.

8.12.4 Apparatus.

8.12.4.1 The thermal exposure test oven shall be as specified in ISO 17493, *Clothing and equipment for protection against heat — Test method for convective heat resistance using a hot air circulating oven.* The test oven shall be capable of maintaining temperatures up to 260°C, +6/−0°C (500°F, +10/−0°F) and shall be capable of maintaining the required conditions specified in 8.12.5.1, and these conditions shall be continuously monitored.

8.12.4.2 A test fixture shall be constructed using an aramid belt that is at least 50 mm (2 in.) wide and fastened to mounting posts spaced 305 mm, +25/−0 mm (12 in., +1/−0 in.) apart. The test fixture shall be designed to allow the specimens to be attached to the belt by the retention system according to the PASS manufacturer's instructions.

8.12.4.3 An alternative text fixture shall be designed to allow an integrated PASS to be attached in the same configuration as a PASS integrated with SCBA mounting assembly attaches to the PASS.

8.12.4.4 Integrated PASS, other than SCBA integrated PASS, shall be tested in the "as designed" configuration and shall not be altered, separated, or cut apart from what it is integrated with.

8.12.4.5 The test fixtures shall be designed such that with the specimen attached, no portion of the specimen shall touch any oven surface. The test fixtures shall also not degrade the oven recovery time.

8.12.4.6 The sound test chamber shall be as specified in ANSI S1.13, *Methods for Measurement of Sound Pressure Level.*

8.12.5 Procedure.

8.12.5.1 The thermal exposure test temperature shall be set to 260°C, +6/−0°C (500°F, +10/−0°F). The oven shall be

Copyright National Fire Protection Association
Provided by IHS under license with NFPA
No reproduction or networking permitted without license from IHS
Not for Resale

allowed to stabilize at the test temperature for a minimum of 30 minutes.

8.12.5.2 Specimens shall be attached to a test fixture in the "as worn" position.

8.12.5.3 Specimens shall be set to the sensing mode.

8.12.5.4 The test fixture with the specimen attached shall be placed in the test oven perpendicular to the airflow of the oven.

8.12.5.5 There shall be no obstructions between the specimen and the airflow. The test fixture shall position the specimen equidistant from all interior oven surfaces.

8.12.5.6 The test oven door shall not remain open more than 15 seconds. The air circulation shall be shut off while the door is open and turned on when the door is closed.

8.12.5.7 The total test oven recovery time shall not exceed 60 seconds. The thermocouple reading shall remain at 260°C, +5/−0°C (500°F, +10/−0°F) for the duration of the test.

8.12.5.8 Specimens, mounted as specified, shall be exposed in the test oven for 5 minutes, +15/−0 seconds. The test exposure time shall begin when the test thermocouple recovers to 260°C, +5/−0°C (500°F, +10/−0°F).

8.12.5.9 Provisions shall be made to prevent the PASS device from going from sensing mode to alarm mode for the duration of the thermal exposure.

8.12.5.10 After the specified thermal exposure period, the specimen shall be removed from the thermal exposure test oven and within 30 seconds placed in the sound test chamber specified in 8.12.4.6.

8.12.5.11 The specimen shall remain motionless and be allowed to cycle from *sensing mode* to *alarm mode*. When the PASS cycles into the alarm mode, within 30 seconds the sound pressure level for the *alarm signal* shall be measured in a spherical radius at a distance of 3 m, +1/−0 m (9.9 ft, +3.3/−0 ft) from the specimen's annunciator.

8.12.5.12 Following the sound pressure level measurement, the specimen shall be operated according to the manufacturer's instructions to determine the proper functioning as specified in 6.4.2.4 and 6.4.3.2 to determine pass or fail performance.

8.12.5.13 Specimens shall be operated according to the manufacturer's instructions to determine the proper functioning for data logging as specified in 6.1.3 to determine pass or fail performance.

8.12.5.14 Specimens shall be examined for melting, dripping, or ignition to determine pass or fail performance.

8.12.6 Report.

8.12.6.1 The alarm signal sound pressure level measured after exposure to high temperature environment shall be recorded and reported.

8.12.6.2 The functioning of the specimens shall be recorded and reported.

8.12.7 Interpretation.

8.12.7.1 Pass or fail performance shall be determined for each specimen.

8.12.7.2 Failing performance of one or more specimens shall constitute failing performance for this test.

8.13 Heat and Flame Test.

8.13.1 Application. This test method shall apply to all PASS.

8.13.2 Samples.

8.13.2.1 Samples shall be complete PASS.

8.13.2.2 Samples shall be conditioned as specified in 8.1.2.

8.13.3 Specimens.

8.13.3.1 Specimens for testing shall be complete PASS.

8.13.3.2 A minimum of three specimens shall be tested.

8.13.4 Apparatus.

8.13.4.1 A calibration mannequin meeting the requirements specified in Figure 8.13.4.1 shall be provided.

8.13.4.2 A heat and flame test mannequin meeting the requirements specified in Figure 8.13.4.2 shall be provided.

8.13.4.3* Both the calibration mannequin specified in 8.13.4.1 and the heat and flame test mannequin specified in 8.13.4.2 shall have a protective covering.

8.13.4.3.1 The protective covering shall be a weld blanket made of fireproof silica cloth of a minimum weight of 18 oz/sq yd.

8.13.4.3.2 The protective covering shall be designed and constructed to provide coverage over the surface of the mannequin.

8.13.4.3.3 Where additional insulation is needed to protect the mannequin electronics, an additional thermal liner underlayer shall be permitted.

8.13.4.4 The complete protective covering shall be discarded and shall not be used where the damage to any portion indicates the covering can no longer provide thermal protection for the test mannequin.

8.13.4.5 The test headform shall be covered with an undyed aramid hood for protection of the headform during testing. The protective hood shall meet the structural fire-fighting protective hood requirements specified in NFPA 1971, *Standard on Protective Ensembles for Structural Fire Fighting and Proximity Fire Fighting*.

8.13.4.6 The heat and flame test apparatus shall be as specified in Figure 8.13.4.6(a) and Figure 8.13.4.6(b).

8.13.4.7 The test oven shall be a horizontal forced circulating air oven with an internal velocity of 61 m/min, ±15 m/min (200 linear ft/min, ±49 linear ft/min). The test oven shall have minimum dimensions of 915 mm depth × 915 mm width × 1220 mm height (36 in. depth × 36 in. width × 48 in. height).

8.13.5 Procedure.

8.13.5.1 For calibration prior to the heat and flame test, the calibration mannequin specified in Figure 8.13.4.1 shall be exposed to direct flame contact for 10 seconds using the heat and flame test apparatus.

8.13.5.1.1 All peak temperature readings shall be within a temperature range of 815°C to 1150°C (1500°F to 2102°F).

8.13.5.1.2 The average mean of all peak temperature readings shall be no higher than 950°C (1742°F).

8.13.5.2 The test oven recovery time, after the door is closed, shall not exceed 1.0 minute.

8.13.5.3 Specimens shall be attached to the front or rear of the test mannequin by the retention system, in accordance

Copyright National Fire Protection Association
Provided by IHS under license with NFPA
No reproduction or networking permitted without license from IHS
Not for Resale

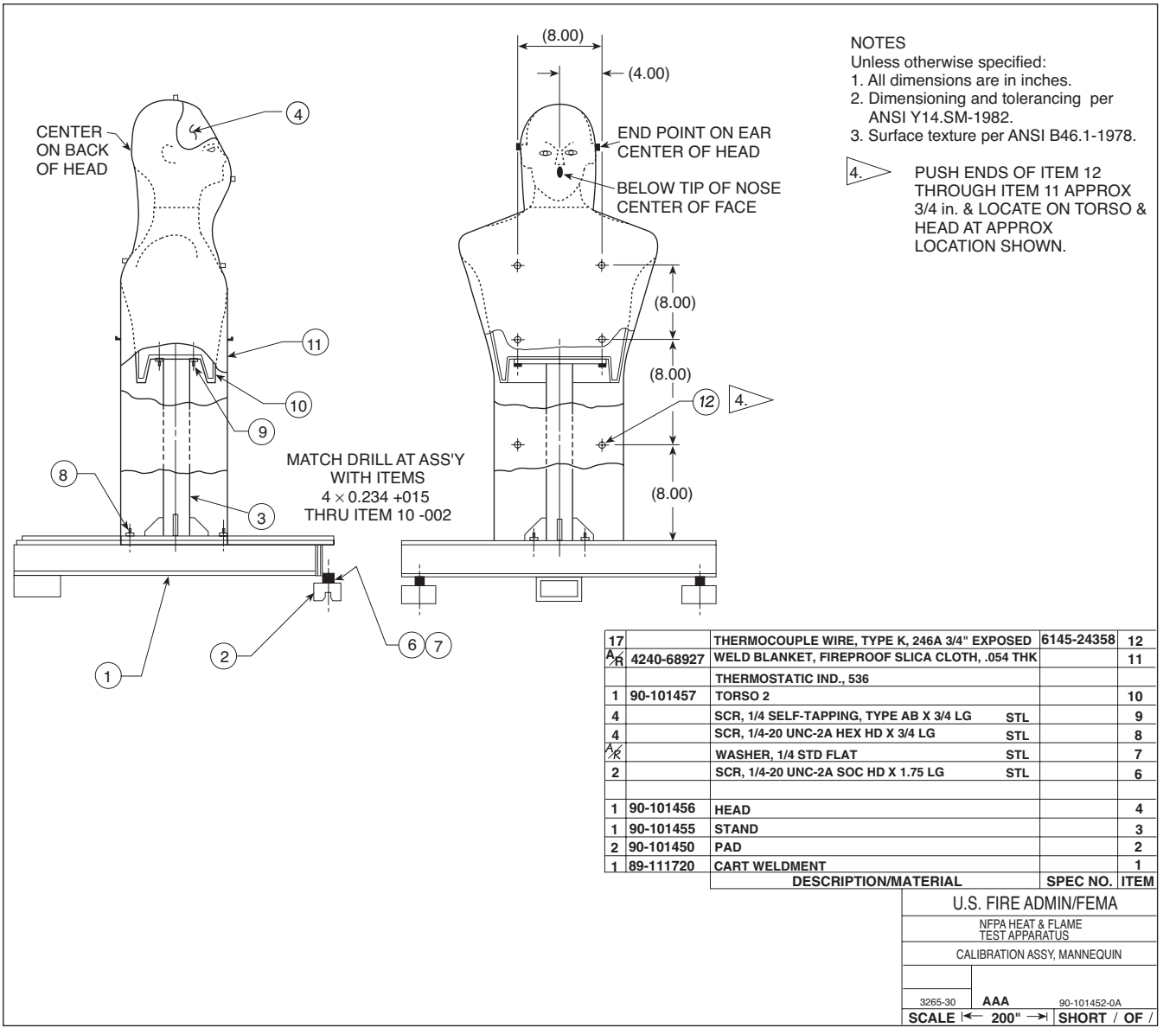

ITEM	SPEC NO.	DESCRIPTION/MATERIAL	
12	6145-24358	THERMOCOUPLE WIRE, TYPE K, 246A 3/4" EXPOSED	17
11		WELD BLANKET, FIREPROOF SLICA CLOTH, .054 THK	AR 4240-68927
		THERMOSTATIC IND., 536	
10		TORSO 2	1 90-101457
9		SCR, 1/4 SELF-TAPPING, TYPE AB X 3/4 LG STL	4
8		SCR, 1/4-20 UNC-2A HEX HD X 3/4 LG STL	4
7		WASHER, 1/4 STD FLAT STL	AR
6		SCR, 1/4-20 UNC-2A SOC HD X 1.75 LG STL	2
4		HEAD	1 90-101456
3		STAND	1 90-101455
2		PAD	2 90-101450
1		CART WELDMENT	1 89-111720

FIGURE 8.13.4.1 Calibration Mannequin.

with the manufacturer's instructions, by means of a loop, belt, SCBA strap, or other means, on the outside or over the mannequin protective clothing.

8.13.5.3.1 Specimens shall be attached to the mannequin in accordance with the PASS manufacturer's instructions.

8.13.5.3.2 For integrated PASS, the specimens shall be mounted on the test mannequin in accordance with the PASS manufacturer's instructions to simulate the correct wearing position.

8.13.5.4 Specimens shall be subjected to three different series of the heat and flame test identified in this section as Test Procedure 1, Test Procedure 2, and Test Procedure 3. Different specimens shall be used for each of the three test series.

8.13.5.5 For all three test procedures, specimens mounted on the test mannequin shall first be placed in the test oven, which has been preheated to 95°C, ±2°C (203°F, ±4°F) for 15 minutes, +15/–0 seconds. The test exposure time of 15 minutes shall begin after the door is closed and the oven temperature recovers to 95°C (203°F).

8.13.5.6 At the completion of the 15-minute, +15/–0 seconds, exposure, the oven door shall be opened, and the specimens, mounted on the test mannequin, shall be moved out of the oven and into the center of the burner array.

8.13.5.7 The specimens shall then be exposed to direct flame contact for 10 seconds, +0.25 /–0 seconds. This exposure shall begin within 20 seconds of removal of the specimen from the test oven.

Copyright National Fire Protection Association
Provided by IHS under license with NFPA
No reproduction or networking permitted without license from IHS
Not for Resale

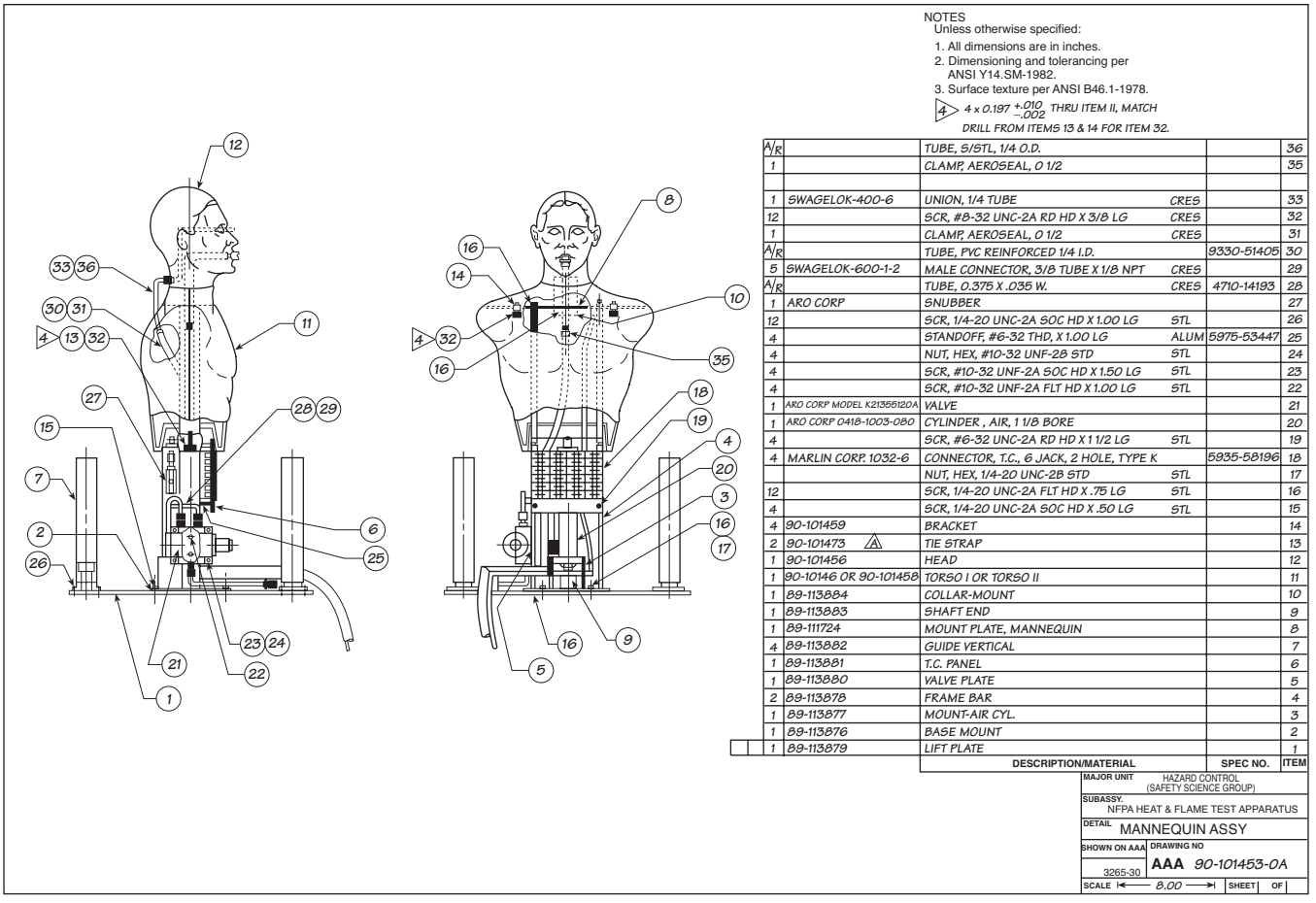

FIGURE 8.13.4.2 Heat and Flame Test Mannequin.

8.13.5.8 For Test Procedure 1, the specimen mode selection device shall be set in the *alarm* mode and then exposed to the flame and drop sequences. Specimens shall be observed for the sounding of the *alarm signal* to determine pass or fail performance as specified in 7.12.1(1).

8.13.5.9 For Test Procedure 2, the specimen mode selection device shall be set in the *sensing* mode and then exposed to the flame and drop sequences. Specimens shall be observed for the sounding of the *operational signal* to determine pass or fail performance as specified in 7.12.2(1).

8.13.5.10 For Test Procedure 3, the specimen mode selection device shall be set in the *sensing* mode and then exposed to the flame and drop sequences. Specimens shall be observed for the sounding of the *operational signal* to determine pass or fail performance as specified in 7.12.3(1).

8.13.5.11 After the mode selection device has been set to the applicable setting for Test Procedure 1, Test Procedure 2, or Test Procedure 3, as indicated in 8.13.5.8, 8.13.5.9, or 8.13.5.10, respectively, the specimens in all three test procedures shall then be exposed to direct flame contact for 10 seconds, +0.25 /–0 seconds. The exposure shall begin within 20 seconds of removal of the specimens from the test oven.

8.13.5.12 For all three test procedures, specimens shall be observed for any afterflame, and the afterflame duration shall be recorded to determine pass or fail performance as specified in 7.12.1, 7.12.2, and 7.12.3.

8.13.5.13 For Test Procedure 1, specimens shall be observed for the continued sounding of the *alarm signal* to determine pass or fail performance as specified in 7.12.1(1).

8.13.5.14 For all three test procedures, within 20 seconds of completion of the direct flame exposure, specimens mounted on the test mannequin shall be raised 150 mm, +6/–0 mm (6 in., +0.25/–0 in.) and dropped freely.

8.13.5.15 For all three test procedures, specimens shall be observed to determine pass or fail performance and that nothing has fallen off the PASS and that the PASS has not fallen from its mounted position.

8.13.5.16 Specimens shall be operated according to the manufacturer's instructions to determine the proper functioning for data logging as specified in 6.1.3 to determine pass or fail performance as specified in 7.12.1(4), 7.12.2(9), and 7.12.3(7).

8.13.5.17 For Test Procedure 1, following the drop sequence, specimens shall be observed for the continued sounding of the *alarm signal* to determine pass or fail performance as specified in 7.12.1(1).

Copyright National Fire Protection Association
Provided by IHS under license with NFPA
No reproduction or networking permitted without license from IHS
Not for Resale

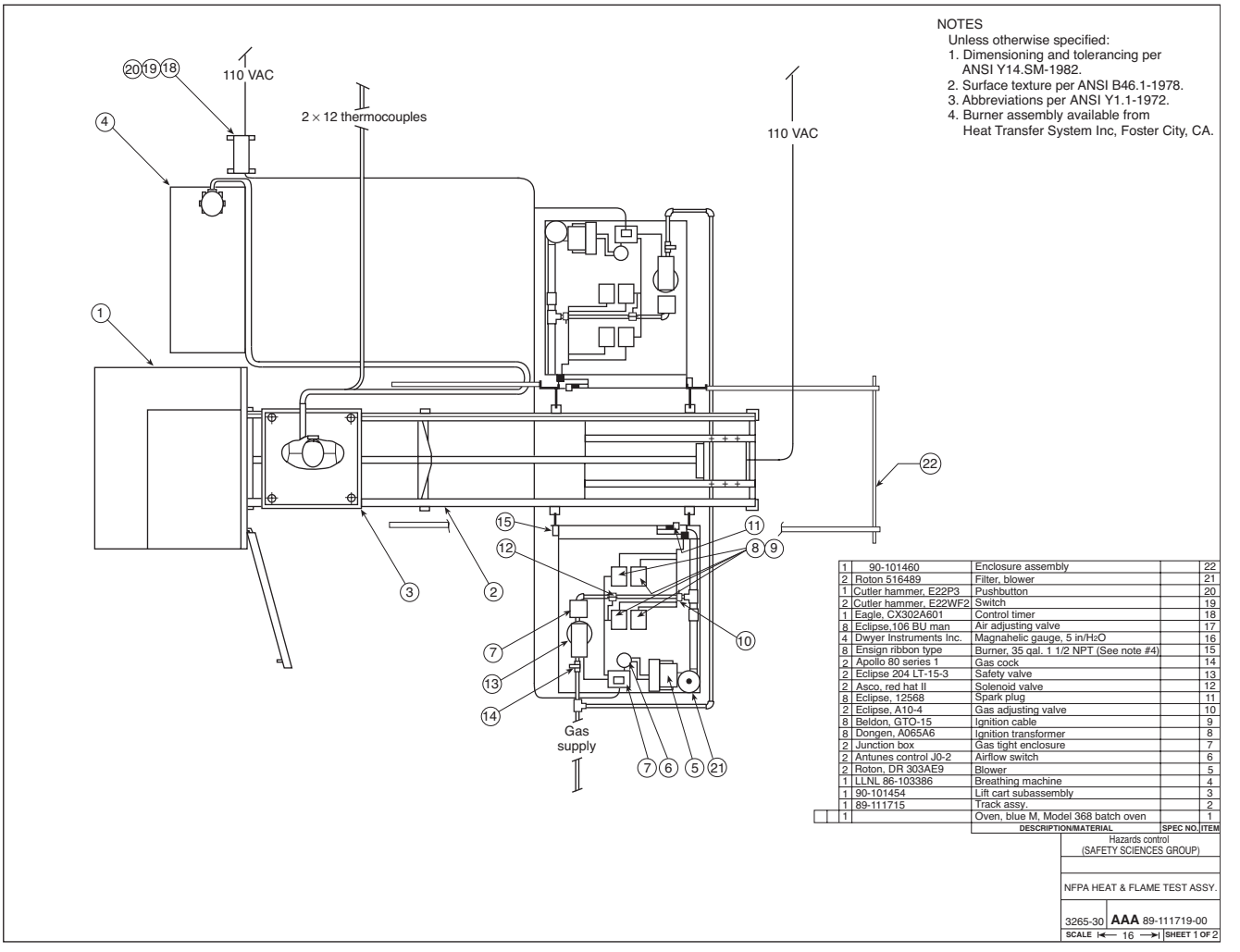

FIGURE 8.13.4.6(a) Heat and Flame Test Apparatus: Top View.

8.13.5.17.1 The specimen mode selection device then shall be set to *off*.

8.13.5.17.2 Specimens shall be observed for the proper functioning of the mode selection device to determine pass or fail performance as specified in 7.12.1(3).

8.13.5.18 For Test Procedure 2, following the flame and drop sequences, specimens shall remain motionless and allowed to cycle to the *pre-alarm signal* and then to the *alarm signal*.

8.13.5.18.1 Following the sounding of the *alarm signal*, the mode selection device shall be set to *off*.

8.13.5.18.2 Specimens shall be observed for the proper cycling to determine pass or fail performance as specified in 7.12.2(2) and 7.12.2(4).

8.13.5.18.3 Specimens shall be observed for the activation and operation of the primary *pre-alarm signal* and the *alarm signal* to determine pass or fail performance as specified in 7.12.2(3) and 7.12.2(8).

8.13.5.18.4 Supplementary *pre-alarm signal(s)*, where provided, shall be evaluated for proper operation.

8.13.5.18.5 Specimens shall be observed for the proper functioning of the mode selection device to determine pass or fail performance as specified in 7.12.2(6).

8.13.5.19 For Test Procedure 3, following the flame and drop sequences, the specimen mode selection device shall be set to *alarm*.

8.13.5.19.1 Where specimens begin to operate the *pre-alarm signal(s)* prior to being set to *alarm*, the specimen shall be jarred to cancel the *pre-alarm signal(s)* before setting to *alarm*.

8.13.5.19.2 Following the sounding of the *alarm signal*, the mode selection device shall be set to *off*.

8.13.5.19.3 Specimens shall be observed for the proper functioning of the mode selection device while switching to *alarm* to determine pass or fail performance as specified in 7.12.3(2).

8.13.5.19.4 Specimens shall be observed for the sounding of the *alarm signal* to determine pass or fail performance as specified in 7.12.3(3).

Copyright National Fire Protection Association
Provided by IHS under license with NFPA
No reproduction or networking permitted without license from IHS
Not for Resale

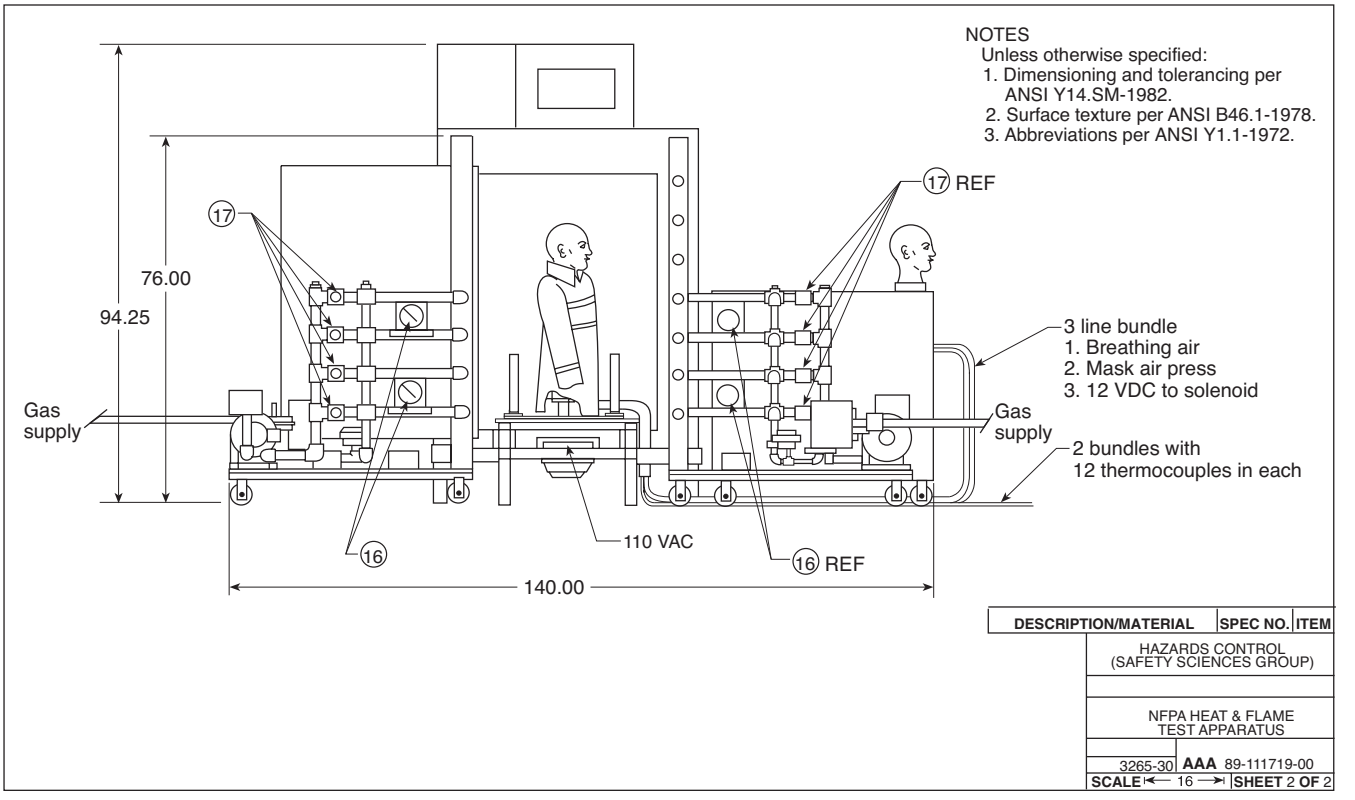

FIGURE 8.13.4.6(b) Heat and Flame Test Apparatus: Side View.

8.13.5.19.5 Specimens shall be observed to determine the proper functioning of the mode selection device while switching to *off* to determine pass or fail performance as specified in 7.12.3(4).

8.13.5.20 For all three test procedures, specimens shall be operated according to the manufacturer's instructions to determine the proper functioning as specified in 6.4.2.4 and 6.4.3.2.

8.13.5.21 The alarm signal sound pressure level shall be measured as specified in 7.1.2.1 to determine pass or fail performance.

8.13.6 Report.

8.13.6.1 Observations of any afterflame shall be recorded and reported for each specimen.

8.13.6.2 Observations of the functioning of the mode selection while the specimen is being activated shall be evaluated, recorded, and reported for each specimen.

8.13.6.3 Observations of the sounding of the *operational signal* shall be evaluated, recorded, and reported for each specimen.

8.13.6.4 Observations of the functioning of the mode selection device while being switched to the sensing mode shall be evaluated, recorded, and reported for each specimen.

8.13.6.5 Observations of the activation and sounding of the primary *pre-alarm signal* shall be evaluated, recorded, and reported for each specimen.

8.13.6.6 Observations of the activation and sounding of any supplementary *pre-alarm signal(s)*, where provided, shall be evaluated, recorded, and reported for each specimen.

8.13.6.7 Observations of the functioning of the mode selection device while switching to *alarm* shall be evaluated, recorded, and reported for each specimen.

8.13.6.8 Observations of the sounding of the *alarm signal* and the continued sounding of the *alarm signal* shall be evaluated, recorded, and reported for each specimen.

8.13.6.9 Observations of the functioning of the mode selection device while switching to *off* shall be evaluated, recorded, and reported for each specimen.

8.13.6.10 Observations of the functioning of the data logging shall be evaluated, recorded, and reported for each specimen.

8.13.6.11 The specimen alarm signal sound pressure level shall be measured, recorded, and reported.

8.13.7 Interpretation.

8.13.7.1 Pass or fail performance shall be determined for each specimen.

8.13.7.2 One or more specimens failing this test or a portion of this test shall constitute failing performance.

8.14 Signal Frequency Test.

8.14.1 Application. This test shall apply to the pre-alarm and alarm signals of all PASS.

Copyright National Fire Protection Association
Provided by IHS under license with NFPA
No reproduction or networking permitted without license from IHS
Not for Resale

8.14.2 Samples.

8.14.2.1 Samples shall be complete PASS.

8.14.2.2 Samples shall be conditioned as specified in 8.1.2.

8.14.3 Specimens.

8.14.3.1 Specimens for testing shall be complete PASS.

8.14.3.2 A minimum of three specimens shall be tested.

8.14.4 Apparatus.

8.14.4.1 All testing shall be conducted in a laboratory grade semi-anechoic room.

8.14.4.2 A frequency analyzer set to measure in either 1/12 octave or narrow band connected to a microphone shall be used to measure the frequencies.

8.14.5 Procedure.

8.14.5.1 Specimens shall be oriented in the wearing position with the annunciator positioned 1 m, ±25 mm (39 in., ±1 in.) from the microphone in the semi-anechoic room.

8.14.5.2 The *pre-alarm* or *alarm signal* shall be activated, and the signal frequency shall be measured.

8.14.5.3 A primary frequency shall be at least 6 dB greater than the lowest detectable intensity between 1000 and 2000 Hz.

8.14.5.4 A new primary frequency shall have a valley of at least 3 dB between the two frequencies being measured.

8.14.5.5 The two primary *pre-alarm signal* frequencies and the three primary *alarm signal* frequencies shall be measured using the frequency analyzer.

8.14.6 Report.

8.14.6.1 The two pre-alarm signal primary signal frequencies shall be recorded and reported.

8.14.6.2 The three alarm signal primary signal frequencies shall be recorded and reported.

8.14.7 Interpretation.

8.14.7.1 Pass or fail performance shall be determined for each specimen for both the pre-alarm and the alarm signals.

8.14.7.2 One or more specimens failing this test shall constitute failing performance.

8.15 Product Label Durability Test.

8.15.1 Application. This test method shall apply to all PASS product labels.

8.15.2 Samples.

8.15.2.1 Samples shall be complete PASS with all product labels attached.

8.15.2.2 Samples shall be conditioned as specified in 8.1.2.

8.15.3 Specimens.

8.15.3.1 Specimens for testing shall be complete PASS with all product labels attached.

8.15.3.2 A minimum of three specimens shall be tested.

8.15.3.3 At least three specimens shall be subjected to all three test procedures.

8.15.4 Apparatus.

8.15.4.1 A test chamber or cabinet shall be provided and shall be capable of maintaining the required conditions specified in 8.15.5, 8.15.6, and 8.15.7 throughout the envelope of air surrounding the specimen being tested.

8.15.4.2 The conditions in the chamber or cabinet shall be continuously monitored.

8.15.5 Test Procedure 1.

8.15.5.1 Specimens shall be subjected to the elevated temperature environmental conditioning specified in 8.3.5.1 through 8.3.5.5, excluding 8.3.5.6 through 8.3.5.9.

8.15.5.2 Specimens shall be removed following the specified conditioning, and evaluation shall begin within 30 seconds of removal from conditioning.

8.15.5.3 The product labels shall be permitted to be wiped clean with an untreated cloth prior to being examined.

8.15.5.4 Specimen product labels shall be examined at a distance of 305 mm, +25/–0 mm (12 in., +1/–0 in.) by the unaided eye with 20/20 vision or with vision corrected to 20/20.

8.15.6 Test Procedure 2.

8.15.6.1 Specimens shall be subjected to the low-temperature environmental conditioning specified in 8.3.6.1, excluding 8.3.6.2 through 8.3.6.5.

8.15.6.2 Specimens shall be removed following the specified conditioning, and evaluation shall begin within 30 seconds of removal from conditioning.

8.15.6.3 The product labels shall be permitted to be wiped clean with an untreated cloth prior to being examined.

8.15.6.4 Specimen product labels shall be examined at a distance of 305 mm, +25/–0 mm (12 in., +1/–0 in.) by the unaided eye with 20/20 vision or with vision corrected to 20/20.

8.15.7 Test Procedure 3.

8.15.7.1 Specimens shall be subjected to the temperature shock environmental conditioning specified in 8.3.7.1 through 8.3.7.4 and excluding 8.3.7.5 through 8.3.7.7.

8.15.7.2 Specimens shall be removed following the specified conditioning, and evaluation shall begin within 30 seconds of removal from conditioning.

8.15.7.3 The product labels shall be permitted to be wiped clean with an untreated cloth prior to being examined.

8.15.7.4 Specimen product labels shall be examined at a distance of 305 mm, +25/–0 mm (12 in., +1/–0 in.) by the unaided eye with 20/20 vision or with vision corrected to 20/20.

8.15.8 Report. The legibility of each specimen product label shall be recorded and reported.

8.15.9 Interpretation.

8.15.9.1 Pass or fail performance shall be determined for each specimen.

8.15.9.2 Any one specimen failing the test shall constitute failing performance.

Copyright National Fire Protection Association
Provided by IHS under license with NFPA
No reproduction or networking permitted without license from IHS
Not for Resale

8.16 Tumble–Vibration Test.

8.16.1 Application. This test method shall apply to all PASS.

8.16.2 Samples.

8.16.2.1 Samples shall be complete PASS.

8.16.2.2 Samples shall be conditioned as specified in 8.1.2.

8.16.2.3 Integrated PASS, other then SCBA integrated PASS, shall be tested in the "as designed" configuration and shall not be altered, separated, or cut apart from what it is integrated with.

8.16.3 Specimens.

8.16.3.1 Specimens for testing shall be complete PASS.

8.16.3.2 A minimum of three specimens shall be tested.

8.16.4 Apparatus. The tumble test apparatus shall be as specified in Figure 8.16.4.

8.16.5 Procedure.

8.16.5.1 The test specimens shall be placed unrestrained in the tumbling apparatus. Only one specimen shall be tested at a time.

8.16.5.2 The tumbling apparatus shall be run at a speed of 15 rpm, ±1 rpm.

8.16.5.3 The test shall be run for a duration of 3 hours, +5/−0 minutes.

8.16.5.4 Specimens shall be operated according to the manufacturer's instruction to determine the proper functioning as specified in 7.1.3 to determine pass or fail performance.

8.16.5.5 Upon completion of the test duration, specimens shall be operated according to the manufacturer's instructions to determine the proper functioning for data logging as specified in 6.1.3 to determine pass or fail performance.

8.16.5.6 The alarm signal sound pressure level shall be measured as specified in 7.1.3 to determine pass or fail performance.

8.16.6 Report.

8.16.6.1 The specimen *alarm signal* sound pressure level shall be measured, recorded, and reported.

8.16.6.2 The functioning of the specimens shall be recorded and reported.

8.16.7 Interpretation.

8.16.7.1 Pass or fail performance shall be determined for each specimen.

8.16.7.2 Any one specimen failing the test shall constitute failing performance.

8.17 PASS *Alarm Signal* Muffle Test.

8.17.1 Application. This test method shall apply to all PASS.

8.17.2 Samples.

8.17.2.1 Samples for testing shall be complete PASS.

8.17.2.2 Samples shall be conditioned as specified in 8.1.2.

8.17.3 Specimens.

8.17.3.1 Specimens for testing shall be complete PASS.

8.17.3.2 At least three specimens shall be tested.

8.17.4 Apparatus.

8.17.4.1 The test chamber shall be as specified in ANSI S1.13, *Methods for Measurement of Sound Pressure Level.*

8.17.4.2 Testing shall be conducted in a test chamber that absorbs a minimum of 90 percent of all sound from 500 Hz to 5000 Hz.

8.17.4.3 Test subjects shall wear a structural fire-fighting protective ensemble that includes the coat, trousers, helmet, hood, gloves, and footwear that are certified as compliant with NFPA 1971, *Standard on Protective Ensembles for Structural Fire Fighting and Proximity Fire Fighting.*

8.17.4.4 Test subjects shall also wear a SCBA that is certified as compliant with NFPA 1981, *Standard on Open-Circuit Self-Contained Breathing Apparatus (SCBA) for Emergency Services.*

8.17.5 Procedure.

8.17.5.1 Specimens shall be tested at an ambient temperature of 22°C, ±3°C (72°F, ±5°F) and RH of 50 percent, ±25 percent.

8.17.5.2 Specimens shall be tested for sound pressure levels of the primary alarm signals in accordance with ANSI S1.13, *Methods for Measurement of Sound Pressure Level.*

8.17.5.3 All sound pressure level measurements shall be made with the sound level meter ballistics set to the peak response setting, and the test subject shall don the following:

(1) The protective ensemble specified in 8.17.4.3
(2) The specimen PASS per the manufacturers' instructions

8.17.5.4 The test subject shall assume each of the following five testing positions, shall place the specimen PASS into the alarm mode, and shall remain in each position, unmoving, until the sound pressure levels have been measured and recorded:

(1) Face down with arms fully extended out to the sides
(2) Supine left as far as possible, arms down along sides
(3) Supine right as far as possible, arms down along sides
(4) Fetal, knees drawn to chest as far as possible, arms around legs, and lying on right side
(5) Fetal, knees drawn to chest as far as possible, arms around legs, and lying on left side

8.17.5.5 The sound pressure level for the *alarm signal* shall be measured in a spherical radius at a distance of 3 m, +1/−0 m (9.9 ft, +3.3/−0 ft) in from the waist of the test subject.

8.17.6 Report. The *alarm signal* sound pressure levels shall be measured, recorded, and reported.

8.17.7 Interpretation.

8.17.7.1 Pass or fail performance shall be determined for each specimen.

8.17.7.2 One or more specimens failing any portion of this test shall constitute failing performance.

Copyright National Fire Protection Association
Provided by IHS under license with NFPA
No reproduction or networking permitted without license from IHS
Not for Resale

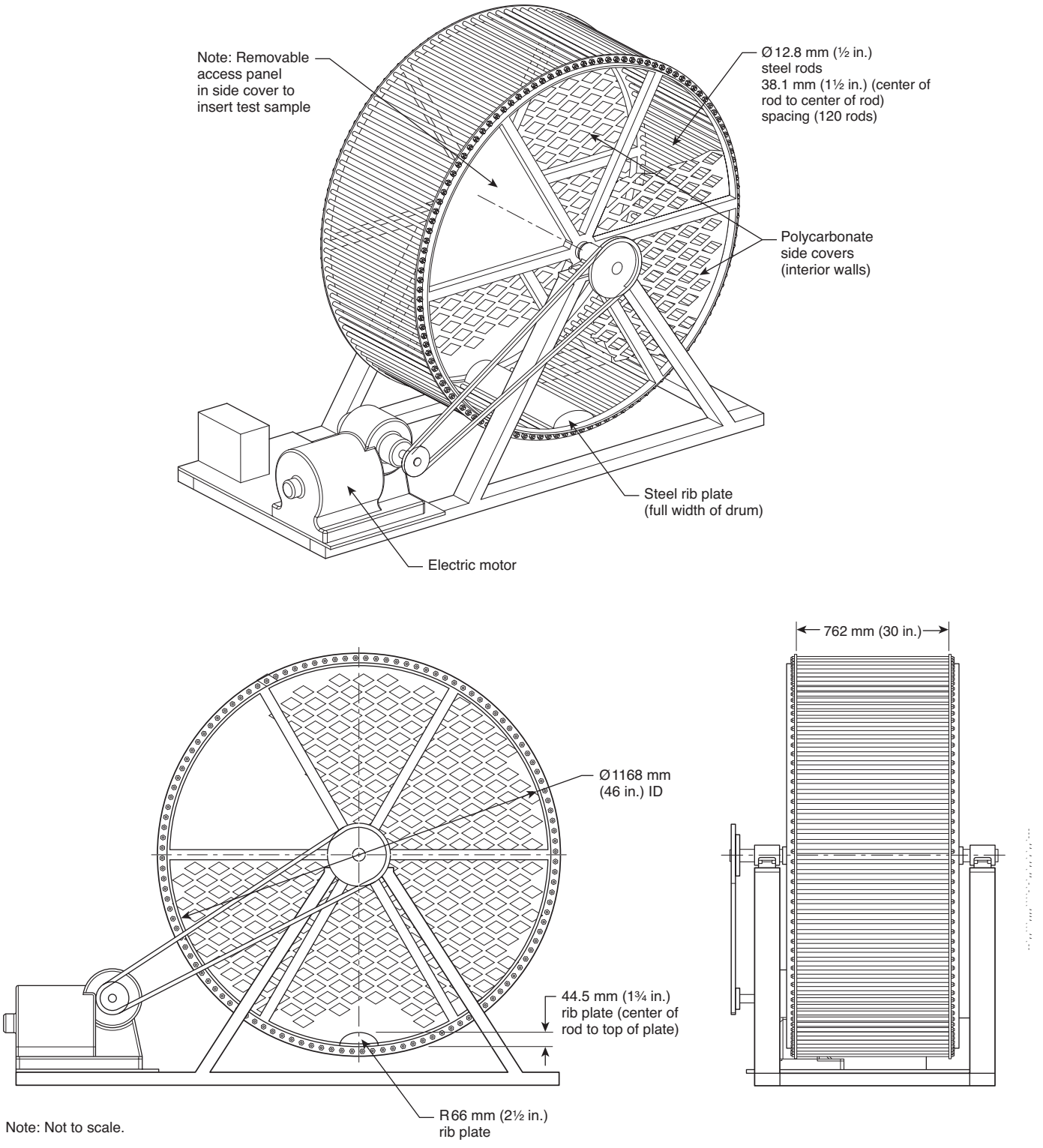

FIGURE 8.16.4 Tumble Test Apparatus.

Copyright National Fire Protection Association
Provided by IHS under license with NFPA
No reproduction or networking permitted without license from IHS
Not for Resale

Annex A Explanatory Material

Annex A is not a part of the requirements of this NFPA document but is included for informational purposes only. This annex contains explanatory material, numbered to correspond with the applicable text paragraphs.

A.1.1.1 NFPA 1500, *Standard on Fire Department Occupational Safety and Health Program*, requires that each person involved in rescue, fire fighting, or other hazardous duties be provided with and use a PASS.

PASS should be worn on protective clothing or protective equipment, or as an integrated part of another item of protective clothing or protective equipment and used whenever the member is involved in fire suppression or similar activities, regardless of whether SCBA is worn. This might require the PASS to be moved from one protective clothing item to another or the department to purchase additional PASS for use where structural protective clothing is not worn, as in, for example, wildland fire fighting, technical rescue, and high-angle rescue.

PASS are designed to assist in locating fire fighters or other emergency services personnel who become incapacitated or are in need of assistance.

Section 5.3 of NFPA 1561, *Standard on Emergency Services Incident Management System*, and Section 8.4 of NFPA 1500, *Standard on Fire Department Occupational Safety and Health Program*, require every fire department to establish a system of fire fighter accountability that provides for the tracking and inventory of all members during emergency operations.

A.1.1.4 After exhaustive searches of systems and testing applications, the Committee could not develop criteria to determine that the performance of such enhancements would be achieved with any degree of certainty and could not develop the appropriate test methods to determine that such features would perform *reliably and consistently* for the safety of the emergency services personnel.

Until such time that sound performance requirements and testing methods are developed that can verify the repeated reliability of the performance, within necessary operational and safety parameters, and that give a high degree of confidence of the performance of the enhancements, the Committee will not address such requirements in the standard. The Committee's opinion is that the inclusion at this time of requirements for such enhancements could potentially increase the risk to the emergency services personnel who might use PASS with such enhancements believing the enhancements would function in all situations to increase their margin of safety.

Purchasers and manufacturers of PASS should understand that NFPA 1982 addresses the minimum requirements for PASS. New technologies and capabilities are available for PASS for the tracking and accountability of emergency services personnel, and emergency services organizations might want to consider specifying such additional features and capabilities that are not included within the minimum standard.

PASS enhancements (accessories) could include the following:

(1) One-way distress notification
(2) Two-way distress/evacuation and mass/team evacuation notification
(3) Electronic personnel accountability
(4) Person-to-person local distress notification
(5) Person locator systems
(6) Additional systems information (data logging features such as cylinder pressure, temperature, breathing rates, elapsed time, etc.)

Where purchasers are interested in enhanced PASS capabilities, they should consider the benefits and limitations of the additional capabilities before making a purchase. Emergency services organizations vary greatly in size, response types, and capabilities. Fire departments on the West Coast, for example, are more likely to encounter multiple-alarm wildland fires than New York City, Boston, or Chicago, which are more likely to experience multiple-alarm tenement or row house building fires than wildfires. Flood-prone regions are less likely to have underground garages, sub-basements, or subway systems. All these examples provide different challenges for the utilization of current versions of enhanced PASS.

Many, but not all, enhancements to current PASS utilize radio signal technology. Radio signals react differently in variable and different environments. Different environments present different challenges to radio communications and radio signals. Transmission of radio signals is affected by topography, weather conditions, building layout and design, and construction material, as well as other obstructions that may be in a given area.

In the testing lab environment, alarm systems, monitoring devices, and even personal alert devices, such as PASS, cannot be "tested" in the total environment in which they could be used. Prospective end users, however, can conduct field testing of such devices in the total environment in which they could be used. Devices such as antennas or repeaters are incorporated into radio frequency (RF) systems used in large industrial and commercial facilities. Realistic and rigorous onsite testing of systems and components will help ensure satisfactory coverage and help the user develop reasonable expectations. Physical testing of personnel safety systems utilizing any form of RF technology should be conducted in an actual or realistic environment. Current RF laboratory testing methods cannot take into account the variety of construction and obstructions commonly found, such as building layout and design, construction materials, topography, and environmental factors. Users must take local factors into consideration in their immediate response areas and consider such things as local topography, weather conditions, and local forms of construction for the system to meet their expectations.

Based on actual jurisdictional performance testing, appropriate public safety or government officials can make informed decisions regarding the purchase, use, and development of operational procedures to be used in providing the maximum level of personal protection for fire and rescue personnel in their jurisdiction.

Purchasers must be aware that a PASS and a PASS with enhanced features are only one component of an overall accountability system or program. Purchasers must develop operational procedures to ensure that the system will function as expected.

Recommendations. Considering the factors noted in the preceding paragraphs, the purchaser should develop a testing and performance criteria similar to the following:

(1) Prior to using or purchasing a product or system, the local emergency services organization should select several different typical target hazard test locations in their normal response area for field testing of the product or system.
(2) Consideration should also be given that these target hazard test locations should provide rigorous testing scenarios and should include radio transmission dead spots, unusual topography, unusual building complexes, aboveground and belowground configurations, and construction.

--`,,```,,,,````-`-`,,`,,`,`,,`---

Copyright National Fire Protection Association
Provided by IHS under license with NFPA
No reproduction or networking permitted without license from IHS
Not for Resale

(3) A person(s) designated by the local head of the emergency services organization(s) should participate in site selection and field testing.
(4) Testing should be conducted by simulation of actual emergency operations and conditions.
   (a) The emergency services official should designate an area (i.e., base station) where receiving components of the PASS could be located if the incident were real.
   (b) Emergency responders should wear or carry the devices just as they would during an actual emergency and travel to all areas of the simulated emergency scene test area.
   (c) Alarm and distress signals must be activated from many areas within the test site while the receiving devices are monitored to ensure reception or acknowledgment of each alarm or distress signal.
   (d) Attempts should be made to make the test scenarios for RF testing as difficult and challenging as possible so problem areas where an RF signal could have difficulty penetrating a building or structure can be isolated and addressed.
   (e) Testing results should be recorded, with environmental factors such as the type of occupancy (residential, commercial, industrial, etc.), construction features, weather conditions, and location noted.
(5) Enhancement devices (leaky coaxial feeders, repeaters, enhanced radio receivers) can be used, as necessary, with placement and effectiveness recorded.
(6) Fire or emergency responders who would routinely have multiple receiving components on the scene of an actual emergency should place multiple receiving devices in service during field-testing scenarios in accordance with their standard operating procedures.
(7) *NFPA 5000, Building Construction and Safety Code*, outlines the eight basic types of construction that should be considered as part of the field-test criteria.
(8) Users should evaluate the effectiveness of the device as it relates to the developed operational procedures.

By conducting these recommended field tests, the end user can witness the performance of the product in the environment in which it is intended to be used, determine, with reasonable accuracy, whether the product does or does not meet their expectations, and then make an appropriate decision.

The committee clearly understands the consequences of not being able to provide an incident commander with immediate notification of fire fighters in distress as well as a method to evacuate fire fighters in the event of an imminent building collapse or other emergency. Therefore, it is our intention to take a proactive approach to encourage government, educational institutions, and third-party compliance agencies to work in concert to develop appropriate test criteria that will validate the performance of distress and evacuation signaling.

A.1.2.2 Although PASS that are in compliance with this standard have been tested to stringent requirements, there is no inherent guarantee against PASS failure or fire fighter injury. Even the best-designed PASS cannot compensate for abuse or lack of a PASS training and maintenance program. The severity of these tests should not encourage or condone abuse of PASS in the field.

By themselves, the environmental and physical tests utilized in this standard might not simulate actual field conditions, but they are devised to put extreme stress loads on PASS in a manner that is accurate and reproducible by test laboratories. However, the selection of the environmental tests was based on summary values derived from studies of conditions that relate to field use.

A.1.3.2 Emergency response organizations are cautioned that accessories are not part of the certified product but could be attached to a certified product by means not engineered, manufactured, or authorized by the certified product manufacturer.

Emergency response organizations are cautioned that if an accessory or its means of attachment causes the structural integrity of the certified product to be compromised, the certified product might not be compliant with the standard with which it was originally certified as compliant. Additionally, if an accessory or the accessory's means of attachment are not designed and manufactured from suitable materials for the hazardous environments of emergency incidents, the failure of the accessory or means of attachment could cause injury to the emergency responder.

Because the aftermarket for accessories for certified products is so broad, emergency response organizations are advised to contact both the accessory manufacturer and the manufacturer of the certified product and verify that the accessory and its means of attachment are suitable for use in the intended emergency response environment. Emergency response organizations should seek and receive written documentation from the accessory manufacturer to validate the following assurances:

(1) Accessories for a certified product and the means of attachment will not degrade the designed protection or performance of the certified product below the requirements of the standard to which it was designed, manufactured, tested, and certified.
(2) The accessory, when properly attached to the certified product, will not interfere with form, fit, or function of any of the certified product or with the form, fit, and function of any of the certified product or with the form, fit, and function of any of the certified product's component parts.

Users are also cautioned that the means of attachment for accessories that fail to safely and securely attach the accessory to a certified product could allow the accessory to become inadvertently dislodged from the certified product, possibly posing a risk to emergency response personnel in the vicinity.

A.3.2.1 Approved. The National Fire Protection Association does not approve, inspect, or certify any installations, procedures, equipment, or materials; nor does it approve or evaluate testing laboratories. In determining the acceptability of installations, procedures, equipment, or materials, the authority having jurisdiction may base acceptance on compliance with NFPA or other appropriate standards. In the absence of such standards, said authority may require evidence of proper installation, procedure, or use. The authority having jurisdiction may also refer to the listings or labeling practices of an organization that is concerned with product evaluations and is thus in a position to determine compliance with appropriate standards for the current production of listed items.

A.3.2.2 Authority Having Jurisdiction (AHJ). The phrase "authority having jurisdiction," or its acronym AHJ, is used in NFPA documents in a broad manner, since jurisdictions and approval agencies vary, as do their responsibilities. Where public safety is primary, the authority having jurisdiction may be a federal, state, local, or other regional department or individual such as a fire chief; fire marshal; chief of a fire prevention bureau, labor department, or health department; building official; electrical inspector; or others having statutory

Copyright National Fire Protection Association
Provided by IHS under license with NFPA
No reproduction or networking permitted without license from IHS
Not for Resale

authority. For insurance purposes, an insurance inspection department, rating bureau, or other insurance company representative may be the authority having jurisdiction. In many circumstances, the property owner or his or her designated agent assumes the role of the authority having jurisdiction; at government installations, the commanding officer or departmental official may be the authority having jurisdiction.

A.3.2.4 Listed. The means for identifying listed equipment may vary for each organization concerned with product evaluation; some organizations do not recognize equipment as listed unless it is also labeled. The authority having jurisdiction should utilize the system employed by the listing organization to identify a listed product.

A.3.3.7 Component. Components include items required for the design and construction of the product and are evaluated and tested individually or are evaluated and tested as part of the whole product.

A.4.1.6 The National Fire Protection Association (NFPA), from time to time, has received complaints that certain items of fire and emergency services protective clothing or protective equipment might be carrying labels falsely identifying them as complying with an NFPA standard. The purpose of the requirement for placing the certification organization's mark on or next to the product label is to help ensure that the purchaser can readily determine compliance of the respective product through independent third-party certification.

NFPA advises those purchasing PASS devices to be aware of the following information.

For PASS to meet the requirements of NFPA 1982, *Standard on Personal Alert Safety Systems (PASS)*, they must be certified by an independent third-party certification organization. In addition, the item must carry the label, symbol, or other identifying mark of that certification organization.

Any PASS that does not bear the mark of an independent third-party certification organization is NOT COMPLIANT with NFPA 1982, *Standard on Personal Alert Safety Systems (PASS)*, even if the product label states that the PASS is compliant.

For further information about certification and product labeling, Chapters 4 and 5 of NFPA 1982 should be referenced. Also, the definitions for *certification/certified*, *labeled*, and *listed* in Chapter 3 should be reviewed.

Third-party certification is an important means of ensuring the quality of fire and emergency services protective clothing and equipment. To be certain that an item is properly certified, labeled, and listed, NFPA recommends that prospective purchasers require appropriate evidence of certification for the specific product and model from the manufacturer. Prospective purchasers should also contact the certification organizations and request copies of the certification organization's list of certified products to the appropriate NFPA standard. This listing is a requirement of third-party certification by this standard and is a service performed by the certification organization.

All NFPA standards on fire and emergency services protective clothing and equipment require that the item be certified by an independent third-party certification organization, and, as with PASS devices that are certified as compliant with NFPA 1982, all items of fire and emergency services protective clothing and equipment must carry the label, symbol, or other identifying mark of that certification organization.

Any item of protective clothing or protective equipment covered by an NFPA standard that does not bear the mark of an independent third-party certification organization is NOT COMPLIANT with the appropriate NFPA standard, even if the product label states that the item is compliant.

A.4.2.1 The certification organization should have a sufficient breadth of interest and activity so that the loss or award of a specific business contract would not be a determining factor in the financial well-being of the agency.

A.4.2.5 The contractual provisions covering certification programs should contain clauses advising the manufacturer that if requirements change, the product should be brought into compliance with the new requirements by a stated effective date through a compliance review program involving all currently listed products.

Without these clauses, certifiers would not be able to move quickly to protect their names, marks, or reputations. A product safety certification program would be deficient without these contractual provisions and the administrative means to back them up.

A.4.2.6 Investigative procedures are important elements of an effective and meaningful product safety certification program. A preliminary review should be carried out on products submitted to the agency before any major testing is undertaken.

A.4.2.7.1 For further information and guidance on recall programs, see 21 CFR 7, "Enforcement Policy," Subpart C.

A.4.2.9 Such factory inspections should include, in most instances, the witnessing of production tests. With certain products, the certification organization inspectors should select samples from the production line and submit them to the main laboratory for countercheck testing. With other products, it might be desirable to purchase samples in the open market for test purposes.

A.4.3.9 Some manufacturers of PASS offer devices that incorporate temperature sensing, radio transmission of distress signals, or other features that this document does not address. This document requires that the PASS, including all additional features installed on or in the PASS, comply with all requirements of this standard.

Users can investigate these features with the individual manufacturers to determine whether they want to specify such additional features.

Certification of the PASS to NFPA 1982 applies to the basic device only and not for any additional features not required by the standard.

A.4.3.13 Users should be aware that power sources vary in structural integrity, current capacity, shelf life, and ability to function under differing peak loads, duty cycles, and temperature extremes. Substitution of power supplies beyond those recommended by the PASS manufacturer can cause unsatisfactory PASS performance during testing or in actual use.

A.4.5.4 For example, this situation exists when the product is wholly manufactured and assembled by another entity or entities for a separate entity that puts its own name and label on the product, frequently called "private labeling," and markets and sells the product as its product.

A.4.5.5 Subcontractors should be considered to be, but not be limited to, a person or persons, company, firm, corporation, partnership, or other organization having an agreement with or under contract with the compliant product manufacturer to supply or assemble the compliant product or portions of the compliant product.

Copyright National Fire Protection Association
Provided by IHS under license with NFPA
No reproduction or networking permitted without license from IHS
Not for Resale

A.4.6.1 ISO Guide 27, *Guidelines for corrective action to be taken by a certification body in the event of misuse of its mark of conformity,* is a component of accreditation of certification organizations specified in 4.1.3 and 4.2.3 of this standard. Those paragraphs contain a mandatory reference to ISO/IEC Guide 65, *General requirements for bodies operating product certification systems,* in which ISO Guide 27 is referenced.

A.4.6.2 By definition, a hazard might involve a condition that can be imminently dangerous to the end user. Therefore, the investigation should be started immediately and completed in as timely a manner as is appropriate considering the particulars of the hazard being investigated.

A.4.6.11 The determination of the appropriate corrective action for the certification organization to initiate should take into consideration the severity of the product hazard and its potential consequences to the safety and health of end users. The scope of testing and evaluation should consider, among other things, testing to the requirements of the standard to which the product was listed as compliant, the age of the product, the type of use and conditions to which the compliant product has been exposed, care and maintenance that has been provided, the use of expertise on technical matters outside the certification organization's area of competence, and product hazards caused by circumstances not anticipated by the requirements of the applicable standard. As a guideline for determining which is more appropriate, a safety alert or a product recall, the following product hazard characteristics, based on 42 CFR 84, "Respiratory Protective Devices," Subpart E, §84.41, are provided:

(1) *Critical:* A product hazard that judgment and experience indicate is likely to result in a condition immediately hazardous to life or health (IHLH) for individuals using or depending on the compliant product. If an IHLH condition occurs, the user will sustain or will be *likely* to sustain an injury of a severity that could result in loss of life, significant bodily injury, or loss of bodily function, either immediately or at some point in the future.
(2) *Major A:* A product hazard other than *Critical* that is likely to result in failure to the degree that the compliant product does not provide any protection or reduces protection *and is not detectable to the user.* The phrase *reduces protection* means the failure of specific protective design(s) or feature(s) that results in degradation of protection in advance of reasonable life expectancy to the point that continued use of the product is *likely* to cause physical harm to the user or that continued degradation could lead to IHLH conditions.
(3) *Major B:* A product hazard other than *Critical* or *Major A* that is likely to result in reduced protection and is detectable to the user. The phrase *reduces protection* means the failure of specific protective design(s) or feature(s) that results in degradation of protection in advance of reasonable life expectancy to the point that continued use of the product is *likely* to cause physical harm to the user or that continued degradation could lead to IHLH conditions.
(4) *Minor:* A product hazard other than *Critical, Major A,* or *Major B* that is not likely to materially reduce the usability of the compliant product for its intended purpose or a product hazard that is a departure from the established applicable standard and has little bearing on the effective use or operation of the compliant product for its intended purpose.

Where the facts are conclusive, based on characteristics of the hazard classified as indicated previously, the certification organization should consider initiating the following corrective actions with the authorized and responsible parties:

(1) *Critical* product hazard characteristics: Product recall
(2) *Major A* product hazard characteristics: Product recall or safety alert, depending on the nature of the specific product hazard
(3) *Major B* product hazard characteristics: Safety alert or no action, depending on the nature of the specific product hazard
(4) *Minor* product hazard characteristic: No action

A.4.6.13 Reports, proposals, and proposed TIAs should be addressed to the technical committee that is responsible for the applicable standard and be sent in care of Standards Administration, NFPA, 1 Batterymarch Park, Quincy, MA 02169-7471.

A.5.1.5 See A.4.1.6.

A.6.1.3 Although NFPA 1982 requires the recording of specific events through the PASS data log function, manufacturers have developed and should continue to develop additional recordable events that may affect fire fighter safety or detect PASS failure modes. These functions go beyond the minimum requirements set by this standard and are intended to detect the potential for PASS malfunction during operation. The potential for malfunction arises from hostile fire environments (e.g., high temperature stress, water ingress, vibration, interference from other electromagnetic sources) and normal wear and tear. The potential for malfunction also arises due to fluctuations of current from the power source (e.g., weakening of power source). For their part, fire departments should determine what important fireground events affect fire fighter safety and encourage PASS manufacturers to display and record real-time data in their devices for future download.

Studies conducted by the National Institute of Standards and Technology (NIST) and the National Institute for Occupational Safety and Health (NIOSH) reveal that electronic components of PASS can be adversely affected by high temperatures. Manufacturers of PASS can choose to design in a diagnostic monitor that measures the internal temperature of the electronics and alerts the wearer that a critical point or failure has been reached. The method of alerting the wearer can be visual, auditory, or both.

Other examples include adding diagnostic functions that detect the following:

(1) Loss of alarm signal frequency due to elevated temperatures
(2) Timing delays in execution of electronic logic
(3) Incorrect mode priority
(4) Scrambling of PASS device control instruction memory

Manufacturers currently choose from a range of options for diagnostic functions to meet the requirements of NFPA 1982. When additional diagnostic functions beyond the minimum requirements are added to a PASS, the design (FMEA) submitted for verification to the certification laboratory must demonstrate that the additional diagnostic functions do not compromise the required functionality *(see 6.3.5).*

A.6.1.4 The retention system should not cause protective clothing and protective equipment to become degraded, such as would occur if the outer shell of protective coats or trousers, helmets, belts, and so forth, were pierced.

Copyright National Fire Protection Association
Provided by IHS under license with NFPA
No reproduction or networking permitted without license from IHS
Not for Resale

A.6.1.5 Removing the power source cover and power source for inspection for water and performing the extended immersion test with the power source cover removed provide a test for the isolation requirement between the power source compartment and the electronics compartment stated in 6.1.5. The extended test is also meant to verify that the electronics compartment maintains a watertight seal when the power source cover is removed.

A.6.2.2 Over the years, several incidents have resulted in fire fighter deaths in situations where other fire fighters were in the vicinity. The common thread in far too many of these incidents was that the fire fighters were wearing PASS *but did not have the PASS activated.* While no one can definitely say that the fire fighters would have survived if their PASS had been activated, investigations have shown that other fire fighters were operating in the vicinity but were unaware that fire fighters were in trouble. Most of these fires were not fully involved conditions where no other fire fighters were operating in the interior when the victim fire fighters went down. In some of these incidents, other fire fighters walked or crawled over the downed fire fighters without realizing that they were there. In another incident, fire fighters heard the alarm signal from a PASS and were searching for the victim only to find the PASS lying on the floor and not attached to a fire fighter. The rescuers were unable to locate the victim fire fighter until the fire was extinguished. The fire fighter was found dead.

Fire fighters who have died without a PASS or wearing a non-activated PASS certainly would have had a significantly better chance of being rescued and surviving if their PASS had been activated.

An informal survey conducted by the Technical Committee to try to determine PASS problems that this standard could attempt to correct revealed some important and disturbing data. Nearly one thousand fire fighters from across the United States and Canada responded to the survey. To the question, "Do you activate your PASS at *every* fire?" over 60 percent answered, "No." To the question, "Why don't you activate your PASS at every fire?" 344 answered, "I forgot," and 206 answered that the operations were "routine, not thought to be dangerous."

The Phoenix Arizona Fire Department recognized the problem of its own fire fighters' not activating their PASS at emergency incidents and pioneered the SCBA-integrated PASS. The Phoenix Fire Department deserves considerable credit for taking a proactive position and working with manufacturers to develop PASS integrated with SCBA rather than just complaining that there were problems with existing PASS. The Phoenix Fire Department also participated in the standards development process and supplied the Committee with information and ideas to assist the Committee during the revision process. While the Committee recognizes that PASS integrated with SCBA helps with getting PASS activated, it depends on use of SCBA. There are still fire departments where all fire fighters do not routinely use and *breathe from* SCBA. There also are several types of operations where SCBA might not be used and stand-alone PASS is required by NFPA 1500, *Standard on Fire Department Occupational Safety and Health Program.*

Although all the requirements for PASS in NFPA 1982 are considered safety issues, the issue of fire fighters' not activating their PASS is one that has an actual body count attached to it. Fire fighters are dying while wearing PASS that is not activated. The Committee has addressed this issue with the design requirement for automatic activation for all PASS. This new requirement recognizes the advances made by PASS integrated with SCBA but is not limited to this single method. Because design requirement has been written without specifying the method for activation to reduce design restriction to the extent possible, manufacturers can be creative in designing automatic activation systems for their product. The Committee fully realizes the danger and consequences of non-activated PASS and is committed to correcting the problem.

Emergency services organizations that use PASS should make the commitment to provide PASS, educate personnel in the use of PASS, ensure that PASS are worn and used by all personnel participating in emergency operations, ensure that PASS are activated for every emergency operation, frequently review their PASS program, and revise the program as necessary. Fire fighters and others using PASS should accept personal responsibility to use and activate PASS before engaging in emergency operations and not shut off PASS until the operation is finished or until they are clear of the danger area.

The function of the *pre-alarm signal* is not to annoy the PASS wearer but to ask, in effect, "I'm not sensing any motion — are you OK?" Physical movement or shaking of the PASS will reset it and let it continue to function to perhaps help save the wearer's life. It cannot help if it is not activated or if it is turned off after the wearer is involved in an emergency operation.

A.7.1.1.2 The following methods are suggested for achieving the requirements of 7.1.2, regarding the pre-alarm signal frequency:

(1) *Warble Tone.* A percentage of modulation on both sides of the selected frequency so that if a 5 percent modulation and a 1500 Hz center frequency were chosen, the warble would range from 1425 Hz to 1575 Hz.
(2) *Alternating Ascending/Descending Chirps.* The ascension of the frequency over a determined range within 1 second and the descent over the same frequency range within 1 second. The chirps should have a 70/30 on/off ratio.
(3) *Pulsing Noise.* A pulsing noise band with a width from ⅓ to 1 octave wide. The noise band plateau duration should be between 200 m/sec and 500 m/sec, and the on time should equal the off time. The rise and fall should be between 20 m/sec and 50 m/sec.

A.8.10.4.1 The cycling of the retention system in 8.10.4.1 is intended to ensure that the PASS will remain attached to the wearer after it has been attached and removed repeatedly during its service life.

A.8.13.4.3 The requirement for the protective covering for the test mannequins is not a specification for a garment that is suitable for use as protection during fire-fighting operations and must not be construed as such. The protective covering has been selected solely for the purpose of protecting the test mannequin and providing a reproducible exterior configuration to support the PASS being tested. The intention of this standard is to test the PASS and not the protective covering.

Annex B Informational References

B.1 Referenced Publications. The documents or portions thereof listed in this annex are referenced within the informational sections of this standard and are not part of the requirements of this document unless also listed in Chapter 2 for other reasons.

Copyright National Fire Protection Association
Provided by IHS under license with NFPA
No reproduction or networking permitted without license from IHS
Not for Resale

B.1.1 NFPA Publications. National Fire Protection Association, 1 Batterymarch Park, Quincy, MA 02169-7471.

NFPA 1500, *Standard on Fire Department Occupational Safety and Health Program*, 2007 edition.

NFPA 1561, *Standard on Emergency Services Incident Management System*, 2005 edition.

NFPA 5000®, *Building Construction and Safety Code®*, 2006 edition.

B.1.2 Other Publications.

B.1.2.1 ISO Publications. International Organization for Standardization, 1, rue de Varembé, Case postale 56, GH-1211 Genève 20, Switzerland.

ISO Guide 27, *Guidelines for corrective action to be taken by a certification body in the event of misuse of its mark of conformity*, 1983.

ISO/IEC Guide 65, *General requirements for bodies operating product certification systems*, 1996.

B.1.2.2 U.S. Government Publications. U.S. Government Printing Office, Washington, DC 20402.

Title 21, Code of Federal Regulations, Part 7, Subpart C, "Enforcement Policy," April 1, 1995.

Title 42, Code of Federal Regulations, Part 84, "Respiratory Protective Devices," 1995.

B.2 Informational References. (Reserved)

B.3 References for Extracts in Informational Sections. (Reserved)

Copyright National Fire Protection Association
Provided by IHS under license with NFPA
No reproduction or networking permitted without license from IHS
Not for Resale

Index

Copyright © 2007 National Fire Protection Association. All Rights Reserved.

The copyright in this index is separate and distinct from the copyright in the document that it indexes. The licensing provisions set forth for the document are not applicable to this index. This index may not be reproduced in whole or in part by any means without the express written permission of NFPA.

-A-

Alarm signal ..... 4.3.10.3; *see also* Pre-alarm signal
- Definition 3.3.1
- Design requirements 6.4
- Frequency
  - Performance requirements 7.1.2.2
  - Test 8.14
- Mode selection devices 6.2, 7.12, A.6.2.2
- Motion detector 6.3, 7.6
- Muffle
  - Performance requirements 7.14
  - Test 8.17
- Sound pressure levels
  - Other tests, specifications met in 7.2, 7.3, 7.4.1, 7.5, 7.8, 7.11, 7.12.1
  - Performance requirements 7.1, A.7.1.1.2
  - Test 8.2
- Tests, evaluation of functioning in 7.2, 7.3, 7.4.1, 7.5, 7.8, 7.11, 7.12

Annunciator (definition) 3.3.2
Application of standard 1.3, A.1.3.2
Approved (definition) 3.2.1, A.3.2.1
Authority having jurisdiction (definition) 3.2.2, A.3.2.2

-C-

Case integrity
- Performance requirements 7.5
- Test 8.6

Certification organization ..... 4.1.3; *see also* Certification program
- Contract with manufacturers 4.2.5, A.4.2.5
- Decisions, appeal of 4.2.11
- Definition 3.3.3
- Hazards involving compliant product ..... 4.6, A.4.6.1 to A.4.6.13

Certification program ..... 4.2, A.4.2.1 to A.4.2.9
Certification/certified ..... Chap. 4
- Appeals of decisions on 4.2.11
- Definition 3.3.4
- Inspection and testing ..... 4.3, A.4.3.9 to A.4.3.13
- Of modified products 4.2.8
- Recertification 4.4
- Temporary, conditional, or partial 4.2.5.1

Cleaning 5.2.4
Complaints and returns, manufacturers' investigation of 4.7
Compliance/compliant (definition) 3.3.5
Compliant product(s)
- Definition 3.3.6
- Hazards involving 4.2.10

Components (definition) 3.3.7, A.3.3.7
Corrosion resistance
- Performance requirements 7.3
- Test 8.4

-D-

Data logging, incorporated 6.1.3, A.6.1.3
- Specifications, meeting 7.2, 7.3, 7.4.1, 7.5, 7.8, 7.11, 7.12.1

Definitions ..... Chap. 3
Design requirements ..... 4.3.8, Chap. 6
Drip 7.11
- Definition 3.3.8

-E-

Electronic temperature stress
- Performance requirements 7.2
- Test 8.3

-F-

Flame resistance ..... *see* Heat and flame resistance
Follow-up program 4.2.9, A.4.2.9
- Definition 3.3.9

-H-

Hardware finishes 6.1.6
Hazards involving compliant product ..... 4.6, A.4.6.1 to A.4.6.13
Heat and flame resistance 7.12
- Heat and Flame Test 8.13, A.8.13.4.3

Heat and immersion leakage resistance
- Performance requirements 7.4
- Test 8.5

Heat resistance
- High temperature functionality test 8.12
- Performance requirements 7.11

High temperature functionality test 8.12

-I-

Impact acceleration resistance test 8.8, A.8.8.4.4.1
Impact resistance 7.8.1
Inspection
- Certification ..... 4.3, A.4.3.9 to A.4.3.13
- Follow-up program 4.2.9, A.4.2.9
- Instructions for 5.2.4

Integrated PASS ..... *see* Personal alert safety system (PASS)
Intrinsic safety performance requirements 7.6
ISO registration, manufacturer 4.5.3

-L-

Labeled (definition) 3.2.3
Labeled PASS 4.1.2, 4.1.4, 4.1.6, 4.1.8, 4.1.9, 4.2.5.2, 5.1.5, A.4.1.6
- Integrity of label, protecting 4.2.12
- Removal from product 4.6.11, A.4.6.11

Labeling ..... Chap. 5
Listed (definition) 3.2.4, A.3.2.4
Listed PASS 4.1.5, 4.6.11, A.4.6.11
Low power source warning signal 6.4.4, 7.1.3, 8.2.10

-M-

Maintenance 5.2.4
Manufacturer 4.1.2
- Appeal of certification decisions 4.2.11
- Certification organization, role in 4.2.1, A.4.2.1
- Complaints and returns, investigation of 4.7
- Contract with certification organization 4.2.5, A.4.2.5
- Definition 3.3.10
- ISO registration 4.5.3
- Labeled products ..... *see* Labeled PASS
- Quality assurance program 4.2.7, 4.5, A.4.2.7.1, A.4.5.4, A.4.5.5
- Safety alert and product recall system 4.2.7.1, 4.5.1, 4.7.3, 4.8, A.4.2.7.1
  - Definition 3.3.17
- User information provided by 5.2

--`,,```,,,,````-`-`,,`,,`,`,,`---

Copyright National Fire Protection Association
Provided by IHS under license with NFPA
No reproduction or networking permitted without license from IHS

Not for Resale

Measurement, units of 1.4
Melt 7.11
Definition 3.3.11
Mode selection devices 6.2, 7.12, A.6.2.2
Model (definition) 3.3.12
Modified products 4.3.11, 4.3.12
Motion detectors 6.3, 7.6

-P-

PASS (definition) ... 3.3.13; *see also* Personal alert safety system (PASS)
Performance requirements ..... 4.3.9, 7.4, Chap. 7, A.4.3.9
Personal alert safety system (PASS)
Definition 3.3.14
Integrated PASS ..... 6.1.2.2 to 6.1.2.4, 6.1.4, A.6.1.4
Definition 3.3.14.1
Nonremoveable 6.1.2.4
Definition 3.3.14.1.1
Removable 4.3.10.2, 6.1.2.3
Definition 3.3.14.1.2
Stand-alone PASS 6.1.4, A.6.1.4
Definition 3.3.14.2
Test series 4.3.10
Power source 4.3.13, 6.1.5, A.4.3.13, A.6.1.5
Low power source warning signal 6.4.4, 7.1.3, 8.2.10
Pre-alarm signal 6.3.3, 6.4.2
Definition 3.3.15
Performance requirements 7.1.1, A.7.1.1.2
Tests, evaluation of functioning in 7.2, 7.3, 7.4.1, 7.5, 7.8, 7.11, 7.12
Pre-use information 5.2.4
Product labels 4.1.4, 4.1.6, 4.1.9, 5.1, A.4.6.1.6
Definition 3.3.16
Durability
Performance requirements 5.1.9, 7.13
Test 8.15
Inspection of 4.3.5, 4.3.6
Product recall system 4.2.7.1, 4.5.1, 4.7.3, 4.8, A.4.2.7.1
Purpose of standard 1.2, A.1.2.2

-Q-

Quality assurance program ..... *see* Manufacturer

-R-

Recertification 4.4
References ..... Chap. 2, Annex B
Replacement/retirement of PASS 5.2.4
Retention system
Design requirements 6.1.4, A.6.1.4
Performance requirements 7.9
Test 8.10, A.8.10.4.1

-S-

Safety alert 4.2.7.1, 4.5.1, 4.7.3, 4.8, A.4.2.7.1
Definition 3.3.17
Sample (definition) 3.3.18
Sample preparation 8.1
Scope of standard 1.1, A.1.1.1, A.1.1.4
Shall (definition) 3.2.5
Shock sensitivity 7.7
Test 8.7
Should (definition) 3.2.6
Signal frequency test 8.14
Sound pressure level test 8.2
Specimen (definition) 3.3.19
Stand-alone PASS ..... *see* Personal alert safety system (PASS)
Standard (definition) 3.2.7
Surrogate cylinder (definition) 3.3.20

-T-

Tests ..... 4.2.6, 4.3, Chap. 8, A.4.2.6, A.4.3.9 to A.4.3.13
Thread, flame-resistant 6.1.7
Tumble–vibration test 8.16

-U-

Units of measurement 1.4
User information 4.3.6, 4.3.7, 5.2

-V-

Vibration resistance 7.8.2, 7.8.3
Vibration test 8.9
Visual mode status indicator 6.2.8

-W-

Water drainage
Performance requirements 7.10
Test 8.11

Copyright National Fire Protection Association
Provided by IHS under license with NFPA
No reproduction or networking permitted without license from IHS
Not for Resale

Sequence of Events Leading to Issuance of an NFPA Committee Document

Step 1: Call for Proposals

- Proposed new Document or new edition of an existing Document is entered into one of two yearly revision cycles, and a Call for Proposals is published.

Step 2: Report on Proposals (ROP)

- Committee meets to act on Proposals, to develop its own Proposals, and to prepare its Report.
- Committee votes by written ballot on Proposals. If two-thirds approve, Report goes forward. Lacking two-thirds approval, Report returns to Committee.
- Report on Proposals (ROP) is published for public review and comment.

Step 3: Report on Comments (ROC)

- Committee meets to act on Public Comments to develop its own Comments, and to prepare its report.
- Committee votes by written ballot on Comments. If two-thirds approve, Report goes forward. Lacking two-thirds approval, Report returns to Committee.
- Report on Comments (ROC) is published for public review.

Step 4: Technical Report Session

- "*Notices of intent to make a motion"* are filed, are reviewed, and valid motions are certified for presentation at the Technical Report Session. ("Consent Documents" that have no certified motions bypass the Technical Report Session and proceed to the Standards Council for issuance.)
- NFPA membership meets each June at the Annual Meeting Technical Report Session and acts on Technical Committee Reports (ROP and ROC) for Documents with "certified amending motions."
- Committee(s) vote on any amendments to Report approved at NFPA Annual Membership Meeting.

Step 5: Standards Council Issuance

- Notification of intent to file an appeal to the Standards Council on Association action must be filed within 20 days of the NFPA Annual Membership Meeting.
- Standards Council decides, based on all evidence, whether or not to issue Document or to take other action, including hearing any appeals.

Committee Membership Classifications

The following classifications apply to Technical Committee members and represent their principal interest in the activity of the committee.

M *Manufacturer:* A representative of a maker or marketer of a product, assembly, or system, or portion thereof, that is affected by the standard.

U *User:* A representative of an entity that is subject to the provisions of the standard or that voluntarily uses the standard.

I/M *Installer/Maintainer:* A representative of an entity that is in the business of installing or maintaining a product, assembly, or system affected by the standard.

L *Labor:* A labor representative or employee concerned with safety in the workplace.

R/T *Applied Research/Testing Laboratory:* A representative of an independent testing laboratory or independent applied research organization that promulgates and/or enforces standards.

E *Enforcing Authority:* A representative of an agency or an organization that promulgates and/or enforces standards.

I *Insurance:* A representative of an insurance company, broker, agent, bureau, or inspection agency.

C *Consumer:* A person who is, or represents, the ultimate purchaser of a product, system, or service affected by the standard, but who is not included in the *User* classification.

SE *Special Expert:* A person not representing any of the previous classifications, but who has a special expertise in the scope of the standard or portion thereof.

NOTES;
1. "Standard" connotes code, standard, recommended practice, or guide.
2. A representative includes an employee.
3. While these classifications will be used by the Standards Council to achieve a balance for Technical Committees, the Standards Council may determine that new classifications of members or unique interests need representation in order to foster the best possible committee deliberations on any project. In this connection, the Standards Council may make appointments as it deems appropriate in the public interest, such as the classification of "Utilities" in the National Electrical Code Committee.
4. Representatives of subsidiaries of any group are generally considered to have the same classification as the parent organization.

Copyright National Fire Protection Association
Provided by IHS under license with NFPA
No reproduction or networking permitted without license from IHS
Not for Resale

NFPA Technical Committee Document Proposal Form

NOTE: All Proposals must be received by 5:00 pm EST/EDST on the published Proposal Closing Date.

For further information on the standards-making process, please contact the Codes and Standards Administration at 617-984-7249 or visit www.nfpa.org/codes.

For technical assistance, please call NFPA at 1-888-344-3555.

FOR OFFICE USE ONLY

Log #:

Date Rec'd:

Please indicate in which format you wish to receive your ROP/ROC ☐ **electronic** ☐ **paper** ☒ **download**
(Note: If choosing the download option, you must view the ROP/ROC from our website; no copy will be sent to you.)

Date April 1, 200X **Name** John J. Doe **Tel. No.** 716-555-1234

Company Air Canada Pilot's Association

Street Address 123 Summer Street Lane **City** Lewiston **State** NY **Zip** 14092

Please indicate organization represented (if any)

1. (a) NFPA Document Title National Fuel Gas Code **NFPA No. & Year** 54, 200X Edition

(b) Section/Paragraph 3.3

2. Proposal Recommends (check one): ☐ new text ☒ revised text ☐ deleted text

3. Proposal (include proposed new or revised wording, or identification of wording to be deleted): [Note: Proposed text should be in legislative format; i.e., use underscore to denote wording to be inserted (inserted wording) and strike-through to denote wording to be deleted (~~deleted wording~~).]

Revise definition of effective ground-fault current path to read:

3.3.78 Effective Ground-Fault Current Path. An intentionally constructed, permanent, low impedance electrically conductive path designed and intended to carry ~~underground~~ electric fault current ~~conditions~~ from the point of a ground fault on a wiring system to the electrical supply source.

4. Statement of Problem and Substantiation for Proposal: (Note: State the problem that would be resolved by your recommendation; give the specific reason for your Proposal, including copies of tests, research papers, fire experience, etc. If more than 200 words, it may be abstracted for publication.)

Change uses proper electrical terms.

5. Copyright Assignment

(a) ☐ **I am the author of the text or other material (such as illustrations, graphs) proposed in this Proposal.**

(b) ☒ **Some or all of the text or other material proposed in this Proposal was not authored by me. Its source is as follows** (please identify which material and provide complete information on its source)**:**

ABC Co.

I agree that any material that I author, either individually or with others, in connection with work performed by an NFPA Technical Committee shall be considered to be works made for hire for the NFPA. To the extent that I retain any rights in copyright as to such material, or as to any other material authored by me that I submit for the use of an NFPA Technical Committee in the drafting of an NFPA code, standard, or other NFPA document, I hereby grant and assign all and full rights in copyright to the NFPA. I further agree and acknowledge that I acquire no rights in any publication of the NFPA and that copyright and all rights in materials produced by NFPA Technical Committees are owned by the NFPA and that the NFPA may register copyright in its own name.

Signature (Required)

PLEASE USE SEPARATE FORM FOR EACH PROPOSAL • NFPA Fax: (617) 770-3500

Mail to: Secretary, Standards Council, National Fire Protection Association, 1 Batterymarch Park, Quincy, MA 02169-7471

2/5/2007

SAMPLE

--`,,```,,,,````-`-`,,`,,`,`,,`---

Copyright National Fire Protection Association
Provided by IHS under license with NFPA
No reproduction or networking permitted without license from IHS

Not for Resale

NFPA Technical Committee Document Proposal Form

NOTE: All Proposals must be received by 5:00 pm EST/EDST on the published Proposal Closing Date.

For further information on the standards-making process, please contact the Codes and Standards Administration at 617-984-7249 or visit www.nfpa.org/codes.

For technical assistance, please call NFPA at 1-888-344-3555.

FOR OFFICE USE ONLY

Log #: _____

Date Rec'd: _____

Please indicate in which format you wish to receive your ROP/ROC ☐ electronic ☐ paper ☐ download
(Note: If choosing the download option, you must view the ROP/ROC from our website; no copy will be sent to you.)

Date _____ **Name** _____ **Tel. No.** _____

Company _____

Street Address _____ **City** _____ **State** _____ **Zip** _____

Please indicate organization represented (if any) _____

1. (a) NFPA Document Title _____ **NFPA No. & Year** _____

(b) Section/Paragraph _____

2. Proposal Recommends (check one): ☐ new text ☐ revised text ☐ deleted text

3. Proposal (include proposed new or revised wording, or identification of wording to be deleted): [Note: Proposed text should be in legislative format; i.e., use underscore to denote wording to be inserted (inserted wording) and strike-through to denote wording to be deleted (~~deleted wording~~).]

4. Statement of Problem and Substantiation for Proposal: (Note: State the problem that would be resolved by your recommendation; give the specific reason for your Proposal, including copies of tests, research papers, fire experience, etc. If more than 200 words, it may be abstracted for publication.)

5. Copyright Assignment

(a) ☐ I am the author of the text or other material (such as illustrations, graphs) proposed in this Proposal.

(b) ☐ Some or all of the text or other material proposed in this Proposal was not authored by me. Its source is as follows (please identify which material and provide complete information on its source)**:**

_____

I agree that any material that I author, either individually or with others, in connection with work performed by an NFPA Technical Committee shall be considered to be works made for hire for the NFPA. To the extent that I retain any rights in copyright as to such material, or as to any other material authored by me that I submit for the use of an NFPA Technical Committee in the drafting of an NFPA code, standard, or other NFPA document, I hereby grant and assign all and full rights in copyright to the NFPA. I further agree and acknowledge that I acquire no rights in any publication of the NFPA and that copyright and all rights in materials produced by NFPA Technical Committees are owned by the NFPA and that the NFPA may register copyright in its own name.

Signature (Required) _____

PLEASE USE SEPARATE FORM FOR EACH PROPOSAL • NFPA Fax: (617) 770-3500

Mail to: Secretary, Standards Council, National Fire Protection Association, 1 Batterymarch Park, Quincy, MA 02169-7471

2/5/2007

Copyright National Fire Protection Association
Provided by IHS under license with NFPA
No reproduction or networking permitted without license from IHS
Not for Resale