NFPA 1977

Standard on Protective Clothing and Equipment for Wildland Fire Fighting

2005 Edition



NFPA, 1 Batterymarch Park, Quincy, MA 02169-7471
An International Codes and Standards Organization

--`,,,```-`-`,,`,,`,`,,`---

Copyright National Fire Protection Association
Provided by IHS under license with NFPA
No reproduction or networking permitted without license from IHS

Not for Resale

IMPORTANT NOTICES AND DISCLAIMERS CONCERNING NFPA DOCUMENTS

NOTICE AND DISCLAIMER OF LIABILITY CONCERNING THE USE OF NFPA DOCUMENTS

NFPA codes, standards, recommended practices, and guides, of which the document contained herein is one, are developed through a consensus standards development process approved by the American National Standards Institute. This process brings together volunteers representing varied viewpoints and interests to achieve consensus on fire and other safety issues. While the NFPA administers the process and establishes rules to promote fairness in the development of consensus, it does not independently test, evaluate, or verify the accuracy of any information or the soundness of any judgments contained in its codes and standards.

The NFPA disclaims liability for any personal injury, property or other damages of any nature whatsoever, whether special, indirect, consequential or compensatory, directly or indirectly resulting from the publication, use of, or reliance on this document. The NFPA also makes no guaranty or warranty as to the accuracy or completeness of any information published herein.

In issuing and making this document available, the NFPA is not undertaking to render professional or other services for or on behalf of any person or entity. Nor is the NFPA undertaking to perform any duty owed by any person or entity to someone else. Anyone using this document should rely on his or her own independent judgment or, as appropriate, seek the advice of a competent professional in determining the exercise of reasonable care in any given circumstances.

The NFPA has no power, nor does it undertake, to police or enforce compliance with the contents of this document. Nor does the NFPA list, certify, test or inspect products, designs, or installations for compliance with this document. Any certification or other statement of compliance with the requirements of this document shall not be attributable to the NFPA and is solely the responsibility of the certifier or maker of the statement.

Copyright National Fire Protection Association
Provided by IHS under license with NFPA
No reproduction or networking permitted without license from IHS
Not for Resale

ADDITIONAL NOTICES AND DISCLAIMERS

Updating of NFPA Documents

Users of NFPA codes, standards, recommended practices, and guides should be aware that these documents may be superseded at any time by the issuance of new editions or may be amended from time to time through the issuance of Tentative Interim Amendments. An official NFPA document at any point in time consists of the current edition of the document together with any Tentative Interim Amendments and any Errata then in effect. In order to determine whether a given document is the current edition and whether it has been amended through the issuance of Tentative Interim Amendments or corrected through the issuance of Errata, consult appropriate NFPA publications such as the National Fire Codes® Subscription Service, visit the NFPA website at www.nfpa.org, or contact the NFPA at the address listed below.

Interpretations of NFPA Documents

A statement, written or oral, that is not processed in accordance with Section 6 of the Regulations Governing Committee Projects shall not be considered the official position of NFPA or any of its Committees and shall not be considered to be, nor be relied upon as, a Formal Interpretation.

Patents

The NFPA does not take any position with respect to the validity of any patent rights asserted in connection with any items which are mentioned in or are the subject of NFPA codes, standards, recommended practices, and guides, and the NFPA disclaims liability for the infringement of any patent resulting from the use of or reliance on these documents. Users of these documents are expressly advised that determination of the validity of any such patent rights, and the risk of infringement of such rights, is entirely their own responsibility.

NFPA adheres to applicable policies of the American National Standards Institute with respect to patents. For further information contact the NFPA at the address listed below.

Law and Regulations

Users of these documents should consult applicable federal, state, and local laws and regulations. NFPA does not, by the publication of its codes, standards, recommended practices, and guides, intend to urge action that is not in compliance with applicable laws, and these documents may not be construed as doing so.

Copyrights

This document is copyrighted by the NFPA. It is made available for a wide variety of both public and private uses. These include both use, by reference, in laws and regulations, and use in private self-regulation, standardization, and the promotion of safe practices and methods. By making this document available for use and adoption by public authorities and private users, the NFPA does not waive any rights in copyright to this document.

Use of NFPA documents for regulatory purposes should be accomplished through adoption by reference. The term "adoption by reference" means the citing of title, edition, and publishing information only. Any deletions, additions, and changes desired by the adopting authority should be noted separately in the adopting instrument. In order to assist NFPA in following the uses made of its documents, adopting authorities are requested to notify the NFPA (Attention: Secretary, Standards Council) in writing of such use. For technical assistance and questions concerning adoption of NFPA documents, contact NFPA at the address below.

For Further Information

All questions or other communications relating to NFPA codes, standards, recommended practices, and guides and all requests for information on NFPA procedures governing its codes and standards development process, including information on the procedures for requesting Formal Interpretations, for proposing Tentative Interim Amendments, and for proposing revisions to NFPA documents during regular revision cycles, should be sent to NFPA headquarters, addressed to the attention of the Secretary, Standards Council, NFPA, 1 Batterymarch Park, P.O. Box 9101, Quincy, MA 02269-9101.

For more information about NFPA, visit the NFPA website at www.nfpa.org.

Copyright National Fire Protection Association
Provided by IHS under license with NFPA
No reproduction or networking permitted without license from IHS
Not for Resale

Copyright © 2005, National Fire Protection Association, All Rights Reserved

NFPA 1977

Standard on

Protective Clothing and Equipment for Wildland Fire Fighting

2005 Edition

This edition of NFPA 1977, *Standard on Protective Clothing and Equipment for Wildland Fire Fighting*, was prepared by the Technical Committee on Wildland Fire Fighting Protective Clothing and Equipment, released by the Technical Correlating Committee on Fire and Emergency Services Protective Clothing and Equipment, and acted on by NFPA at its November Association Technical Meeting held November 13–17, 2004, in Miami Beach, FL. It was issued by the Standards Council on January 14, 2005, with an effective date of February 7, 2005, and supersedes all previous editions.

This edition of NFPA 1977 was approved as an American National Standard on February 7, 2005.

Origin and Development of NFPA 1977

The Technical Committee on Fire Service Protective Clothing and Equipment began work on this standard in April 1989 in answer to requests from the wildland fire service to establish a standard covering the protective clothing and equipment used by fire fighters during wildland fire-fighting operations. The Subcommittee on Wildland Fire Fighting Protective Clothing and Equipment was formed to develop the document. Based on information studied by this subcommittee, the majority of documented injuries to wildland fire fighters are related to heat stress. The goal of this standard was to provide thermal protection for the wildland fire fighter against external heat sources with flame-resistant clothing and equipment while not inducing an extraordinary internal heat stress load.

The protection package encompassed by this standard consists of protective clothing and equipment for normal exposure limits and an emergency fire shelter for severe exposure situations in which serious injury or death can result.

The developmental work for the first edition was completed by the subcommittee in the spring of 1992 and presented to the Technical Committee for their action. The first edition was presented at the Annual Meeting in Orlando, FL, and issued with an effective date of August 20, 1993.

The entire project for fire service protective clothing and equipment was reorganized by the Standards Council in January 1995. The new project had a Technical Correlating Committee on Fire and Emergency Services Protective Clothing and Equipment and seven technical committees operating within the project. The former standing Subcommittee on Wildland Fire Fighting Protective Clothing and Equipment was changed into the new Technical Committee on Wildland Fire Fighting Protective Clothing and Equipment and had the responsibility for the 1998 edition of NFPA 1977.

The second edition of NFPA 1977 was presented to the NFPA membership at the 1998 Annual Meeting in Cincinnati, OH, on May 20, 1998, and was issued by the Standards Council with an effective date of August 5, 1998.

The 2005 edition (third edition) is a complete revision of NFPA 1977 and is reformatted according to the new style for all NFPA codes and standards. Because of the new style, most of the chapter numbering and paragraph numbering has changed; therefore, the chapter titles and numbering, as well as paragraph numbering, have changed. While this edition's content is in a different order than in previous editions, all the material is here, and the table of contents will quickly direct users of the document to the appropriate chapters and sections. The Committee has included in Chapter 4 new requirements for manufacturers' quality assurance programs and for situations in which hazards involving compliant products are believed to exist, including the appropriate actions in addressing such situations if there is a previously unknown threat to the users. These new requirements apply to all fire and emergency services product standards that are the responsibility of this project. This edition includes additional items of wildland fire fighting protective clothing and equipment that were

Copyright National Fire Protection Association
Provided by IHS under license with NFPA
No reproduction or networking permitted without license from IHS
Not for Resale

not addressed in previous editions, including cold weather outerwear, chain saw protectors, load carrying equipment, and goggles. Visibility enhancement for items of wildland fire fighting protective clothing and equipment has been added to the third edition of NFPA 1977 as a nonmandatory option should purchasers choose to specify such enhancements in the purchase specifications. The requirements for face protection accessories, for all other accessories, and for fire shelters have been deleted from this edition. All labeling, design, performance, and testing requirements have been reviewed and refined as necessary.

In Memoriam, 11 September 2001

We pay tribute to the 343 members of FDNY who gave their lives to save civilian victims on September 11, 2001, at the World Trade Center. They are true American heroes in death, but they were also American heroes in life. We will keep them in our memory and in our hearts. They are the embodiment of courage, bravery, and dedication. May they rest in peace.

--`,,`-`-`,,`,,`,`,,`---

Copyright National Fire Protection Association
Provided by IHS under license with NFPA
No reproduction or networking permitted without license from IHS
Not for Resale

Technical Correlating Committee on Fire and Emergency Services Protective Clothing and Equipment

Richard M. Duffy, *Chair*
International Association of Fire Fighters, DC [L]
Rep. International Association of Fire Fighters

William M. Lambert, *Secretary*
Mine Safety Appliances Company, PA [M]
Rep. Compressed Gas Association

Leslie Anderson, USDA Forest Service, MT [E]
Roger L. Barker, North Carolina State University, NC [SE]
Nicholas J. Curtis, Lion Apparel, Inc., OH [M]
Robert A. Freese, Globe Manufacturing Company, NH [M]
Andy Gbur, Intertek, OH [RT]
Bill Grilliot, TFG/Morning Pride Manufacturing LLC, OH [M]
Rep. Fire and Emergency Manufacturers and Services Association Inc.
William E. Haskell, III, Battelle Memorial Institute, MA [RT]
Virgil Hathaway, San Diego Fire Department, CA [U]
Rep. Southern Area Fire Equipment Research
Kimberly M. Henry, Celanese Advanced Materials Inc., NC [M]
James S. Johnson, Lawrence Livermore National Laboratory, CA [RT]
Cy Long, Texas Commission on Fire Protection, TX [E]
David G. Matthews, Fire & Industrial (P.P.E.) Ltd., England [SE]
Richard W. Metzler, U.S. Department of Health and Human Services, PA [RT]
Jim Minx, Oklahoma State Firefighters Association, OK [C]
Rep. Oklahoma State Firefighters Association
Stephen R. Sanders, Safety Equipment Institute (SEI), VA [RT]
Denise N. Statham, Southern Mills, Inc., GA [M]
Jeffrey O. Stull, International Personnel Protection, Inc., TX [SE]
David Trivette, Tyco/Scott Health and Safety, NC [M]
Rep. International Safety Equipment Association
Robert D. Tutterow, Jr., Charlotte Fire Department, NC [U]
Rep. Fire Industry Equipment Research Organization
Harry P. Winer, U.S. Department of the Navy, MA [RT]
Thomas L. Wollan, Underwriters Laboratories Inc., NC [RT]

Alternates

Richard W. Blocker, Jr., The DuPont Company, VA [M]
(Alt. to K. M. Henry)
Leslie F. Boord, U.S. Department of Health and Human Services, PA [RT]
(Alt. to R. W. Metzler)
Janice C. Bradley, International Safety Equipment Association, VA [M]
(Alt. to D. Trivette)
Steven D. Corrado, Underwriters Laboratories Inc., NC [RT]
(Alt. to T. L. Wollan)
Patricia A. Freeman, Globe Manufacturing Company, NH [M]
(Alt. to R. A. Freese)
Patricia A. Gleason, Safety Equipment Institute (SEI), VA [RT]
(Alt. to S. R. Sanders)
Mary I. Grilliot, TFG/Morning Pride Manufacturing LLC, OH [M]
(Alt. to B. Grilliot)
Steven B. Lumry, Oklahoma City Fire Department, OK [C]
(Alt. to J. Minx)
Frank P. Taylor, Lion Apparel, Inc., VA [M]
(Alt. to N. J. Curtis)

Nonvoting

Donna P. Brehm, Virginia Beach Fire Department, VA [U]
Rep. TC on Emergency Medical Services PC&E
Don R. Forrest, United Firefighters of Los Angeles City, CA [L]
Rep. TC on Special Operations PC&E
George M. Jackson, USDA Forest Service, MT [E]
Rep. TC on Wildland Fire Fighting PC&E
Glenn P. Jirka, Miami Township Fire and EMS Division, OH [E]
Rep. TC on Hazardous Materials PC&E
Kirk Owen, Plano Fire Department, TX [U]
Rep. TC on Structural and Proximity Fire Fighting PC&E
Ray F. Reed, Dallas Fire Department, TX [U]
Rep. TC on Respiratory Protection Equipment
Bruce H. Varner, Santa Rosa Fire Department, CA [E]
Rep. TC on Electronic Safety Equipment

Bruce W. Teele, NFPA Staff Liaison

This list represents the membership at the time the Committee was balloted on the final text of this edition. Since that time, changes in the membership may have occurred. A key to classifications is found at the back of the document.

NOTE: Membership on a committee shall not in and of itself constitute an endorsement of the Association or any document developed by the committee on which the member serves.

Committee Scope: This Committee shall have primary responsibility for documents on the design, performance, testing, and certification of protective clothing and protective equipment manufactured for fire and emergency services organizations and personnel, to protect against exposures encountered during emergency incident operations. This Committee shall also have the primary responsibility for documents on the selection, care, and maintenance of such protective clothing and protective equipment by fire and emergency services organizations and personnel.

--`,,`,,`-`-`,,`,,`,`,,`---
Copyright National Fire Protection Association
Provided by IHS under license with NFPA
No reproduction or networking permitted without license from IHS
Not for Resale

Technical Committee on Wildland Fire Fighting Protective Clothing and Equipment

George M. Jackson, *Chair*
USDA Forest Service, MT [E]
Rep. USDA Forest Service

Dennis K. Davis, *Secretary*
USDA Forest Service, MT [RT]
(Alt. to L. Anderson)

Mark Y. Ackerman, University of Alberta, Canada [SE]
Jason L. Allen, Intertek, NY [RT]
Leslie Anderson, USDA Forest Service, MT [E]
Rep. USDA Forest Service
James K. Byrnes, MSA/Mine Safety Appliances Company, PA [M]
Christopher G. F. Corner, Southern Mills, Inc., GA [M]
Steven D. Corrado, Underwriters Laboratories Inc., NC [RT]
Tony W. Craven, USDA Forest Service, WA [L]
Rep. NFFE/IAMAW Forest Service Council
Vincent Diaz, Atlantic Thread and Supply Company Inc., MD [M]
William A. Hicks, U.S. General Services Administration, TX [U]
Galen McCray, State of California, CA [E]
Richard A. Oleson, E. D. Bullard Company, KY [M]
James S. Olson, U.S. Department of the Interior, MT [E]
Louis V. Ott, Gentex Corporation, PA [M]
Ruthalene Payne, Artech Footwear Testing Laboratory, VA [RT]
Serge Poulin, Canadian Interagency Forest Fire Centre (CIFFC), Canada [U]
Jeffrey O. Stull, International Personnel Protection, Inc., TX [SE]
Rick L. Swan, IAFF Local 2881/CDF Fire Fighters, CA [L]
Rep. International Association of Fire Fighters
Gary C. Wood, North Carolina Division of Forest Resources, NC [C]
George A. Yarns, Pennsylvania Bureau of Forestry, PA [C]

Alternates

Stephen L. Derynck, Underwriters Laboratories Inc., NC [RT]
(Alt. to S. D. Corrado)
Andy Gbur, Intertek, OH [RT]
(Alt. to J. L. Allen)
Peggy S. Holcomb, Southern Mills, Inc., GA [M]
(Alt. to C. G. F. Corner)
Robert A. Sallavanti, Gentex Corporation, PA [M]
(Alt. to L. V. Ott)

Bruce W. Teele, NFPA Staff Liaison

This list represents the membership at the time the Committee was balloted on the final text of this edition. Since that time, changes in the membership may have occurred. A key to classifications is found at the back of the document.

NOTE: Membership on a committee shall not in and of itself constitute an endorsement of the Association or any document developed by the committee on which the member serves.

Committee Scope: This Committee shall have primary responsibility for documents on protective clothing and protective equipment, except respiratory protective equipment, that provides hand, foot, torso, limb, and head protection, as well as interface protection for fire fighters or other emergency services responders during incidents involving wildland fire fighting operations. These operations include the activities of fire suppression and property conservation in forest, brush, grass, ground cover, and other such vegetation that is not within structures but that is involved in fire.

Additionally, this committee shall have primary responsibility for documents on the selection, care, and maintenance of wildland fire fighting protective clothing and protective equipment by fire and emergency services organizations and personnel.

Copyright National Fire Protection Association
Provided by IHS under license with NFPA
No reproduction or networking permitted without license from IHS
Not for Resale

Contents

Chapter 1 Administration **1977–** 7
1.1 Scope **1977–** 7
1.2 Purpose **1977–** 7
1.3 Application **1977–** 7
1.4 Units **1977–** 7

Chapter 2 Referenced Publications **1977–** 8
2.1 General **1977–** 8
2.2 NFPA Publication **1977–** 8
2.3 Other Publications **1977–** 8

Chapter 3 Definitions **1977–** 9
3.1 General **1977–** 9
3.2 NFPA Official Definitions **1977–** 9
3.3 General Definitions **1977–** 9

Chapter 4 Certification **1977–**12
4.1 General **1977–**12
4.2 Certification Program **1977–**12
4.3 Inspection and Testing **1977–**13
4.4 Annual Verification of Product Compliance **1977–**14
4.5 Manufacturers' Quality Assurance Program **1977–**14
4.6 Hazards Involving Compliant Product ... **1977–**15
4.7 Manufacturers' Investigation of Complaints and Returns **1977–**15
4.8 Manufacturers' Safety Alert and Product Recall Systems **1977–**15

Chapter 5 Labeling and Information **1977–**16
5.1 Protective Garments **1977–**16
5.2 Protective Helmet **1977–**16
5.3 Protective Gloves **1977–**17
5.4 Protective Footwear **1977–**18
5.5 Protective Face/Neck Shroud **1977–**19
5.6 Protective Goggles **1977–**20
5.7 Chain Saw Protectors **1977–**21
5.8 Load Carrying Protective Equipment **1977–**21

Chapter 6 Design Requirements **1977–**22
6.1 Protective Garment Item Design Requirements **1977–**22
6.2 Protective Helmet Item Design Requirements **1977–**24
6.3 Protective Glove Item Design Requirements **1977–**26
6.4 Protective Footwear Item Design Requirements **1977–**26
6.5 Protective Face/Neck Shroud Item Design Requirements **1977–**27
6.6 Protective Goggle Item Design Requirements **1977–**28
6.7 Chain Saw Protector Item Design Requirements **1977–**28
6.8 Load Carrying Protective Equipment Item Design Requirements **1977–**28

Chapter 7 Performance Requirements **1977–**28
7.1 Protective Garment Item Performance Requirements **1977–**28
7.2 Protective Helmet Item Performance Requirements **1977–**29
7.3 Protective Glove Item Performance Requirements **1977–**29
7.4 Protective Footwear Item Performance Requirements **1977–**30
7.5 Protective Face/Neck Shroud Item Performance Requirements **1977–**30
7.6 Protective Goggle Item Performance Requirements **1977–**31
7.7 Chain Saw Protector Item Performance Requirements **1977–**31
7.8 Load Carrying Protective Equipment Item Performance Requirements **1977–**31

Chapter 8 Test Methods **1977–**31
8.1 Preconditioning **1977–**31
8.2 Radiant Protective Performance (RPP) Test **1977–**33
8.3 Flame Resistance Test **1977–**33
8.4 Heat and Thermal Shrinkage Resistance Test **1977–**35
8.5 Total Heat Loss Test **1977–**38
8.6 Tear Resistance Test **1977–**38
8.7 Cleaning Shrinkage Resistance Test **1977–**38
8.8 Seam Breaking Strength Test **1977–**39
8.9 Thread Heat Resistance Test **1977–**40
8.10 Burst Strength Test **1977–**40
8.11 Top Impact Resistance Test (Force) After Radiant Conditioning **1977–**41
8.12 Helmet Physical Penetration Resistance Test After Radiant Conditioning **1977–**41
8.13 Helmet Antiglare Flammability Test **1977–**41
8.14 Flame Resistance Test for Protective Footwear **1977–**42
8.15 Suspension System Retention Test **1977–**42
8.16 Retroreflectivity and Fluorescence Test **1977–**43
8.17 Retention System Test **1977–**44
8.18 Protective Footwear Abrasion Test **1977–**45
8.19 Goggle and Headlamp Clip Attachment Test **1977–**45
8.20 Protective Glove Flame Resistance Test **1977–**46
8.21 Conductive Heat Resistance Test **1977–**47
8.22 Thermal Protective Performance Test **1977–**48
8.23 Cut Resistance Test **1977–**48
8.24 Puncture Resistance Test **1977–**49

Copyright National Fire Protection Association
Provided by IHS under license with NFPA
No reproduction or networking permitted without license from IHS
Not for Resale

8.25 Dexterity Test **1977**–49
8.26 Grip Test **1977**–49
8.27 Corrosion Resistance Test **1977**–50
8.28 Footwear Conductive Heat Resistance Test **1977**–50
8.29 Eyelet and Stud Post Attachment Test **1977**–50
8.30 Chain Saw Cut Resistance Test **1977**–51
8.31 Label Durability and Legibility Test 1 ..... **1977**–51
8.32 Label Durability and Legibility Test 2 ..... **1977**–52

Annex A Explanatory Material **1977**–53

Annex B Informational References **1977**–56

Index **1977**–57

Copyright National Fire Protection Association
Provided by IHS under license with NFPA
No reproduction or networking permitted without license from IHS
Not for Resale

NFPA 1977

Standard on

Protective Clothing and Equipment for Wildland Fire Fighting

2005 Edition

IMPORTANT NOTE: This NFPA document is made available for use subject to important notices and legal disclaimers. These notices and disclaimers appear in all publications containing this document and may be found under the heading "Important Notices and Disclaimers Concerning NFPA Documents." They can also be obtained on request from NFPA or viewed at www.nfpa.org/disclaimers.

NOTICE: An asterisk (*) following the number or letter designating a paragraph indicates that explanatory material on the paragraph can be found in Annex A.

Information on referenced publications can be found in Chapter 2 and Annex B.

Chapter 1 Administration

1.1 Scope.

1.1.1 This standard shall specify the minimum design, performance, testing, and certification requirements for items of wildland fire fighting protective clothing and equipment, including protective garments, helmets, gloves, footwear, goggles, chain saw protectors, and load carrying equipment.

1.1.2 This standard shall not be interpreted as providing criteria for respiratory protection for wildland fire fighting operations.

1.1.3* This standard alone shall not be interpreted as providing criteria for protective clothing or equipment for structural fire fighting operations.

1.1.4 This standard shall not be interpreted as providing criteria for fire shelters for wildland fire entrapment situations.

1.1.5 Certification of wildland fire fighting protective clothing and equipment to the requirements of this standard shall not preclude certification to additional appropriate standards where the protective clothing or equipment meet all applicable requirements of each standard.

1.1.6 This standard shall not be construed as addressing all safety concerns, if any, associated with its use. It shall be the responsibility of the persons and organizations that use this standard to establish safety and health practices and to determine the applicability of regulatory limitations prior to use of this standard.

1.1.7 Nothing herein shall be construed to restrict any jurisdiction or manufacturer from exceeding these minimum requirements.

1.2 Purpose.

1.2.1* The purpose of this standard shall be to establish a minimum level of protection against the adverse environmental effects encountered by personnel performing wildland fire fighting operations.

1.2.2 To achieve this purpose, this standard shall establish minimum requirements for wildland fire fighting protective garments, helmets, gloves, footwear, goggles, chain saw protectors, and load carrying equipment used by fire fighters during wildland fire fighting operations.

1.2.3* Controlled laboratory tests used to determine compliance with the performance requirements of this standard shall not be deemed as establishing performance levels for all situations to which wildland fire fighting personnel can be exposed.

1.2.4 This standard shall not be interpreted or used as a detailed manufacturing or purchase specification but shall be permitted to be referenced in purchase specifications as minimum requirements.

1.3 Application.

1.3.1 This standard shall apply to the design, manufacturing, and certification of new wildland fire fighting protective clothing and equipment.

1.3.2 This edition of NFPA 1977 shall not apply to wildland fire fighting protective clothing and equipment manufactured to previous editions of this standard.

1.3.3 This standard shall not apply to any wildland protective clothing and equipment manufactured to the requirements of any other organization's standards.

1.3.4* This standard shall not apply to respiratory protection for personnel during wildland fire fighting operations.

1.3.5 This standard shall not apply to fire shelters for use by fire fighters during wildland fire entrapment situations.

1.3.6 This standard alone shall not apply to protection for structural fire fighting operations performed during wildland fire incidents.

1.3.7 This standard alone shall not apply to protection from hazards and adverse environmental effects of EMS, hazardous materials, and USAR operations.

1.3.8 This standard alone shall not apply to protection for terrorism incidents from chemical, biological, radiological, and nuclear (CBRN) agents.

1.3.9 This standard shall not apply to the use of wildland fire fighting protective clothing and equipment; such use requirements are specified in NFPA 1500, *Standard on Fire Department Occupational Safety and Health Program.*

1.3.10 The requirements of this standard shall not apply to accessories that might be attached to wildland fire fighting protective clothing or equipment unless specifically addressed herein.

1.3.11* The requirements of this standard shall not apply to any accessories that could be attached to the product but that are not necessary for the product to meet the requirements of this standard.

1.4 Units.

1.4.1 In this standard, values for measurement are followed by an equivalent in parentheses, but only the first stated value shall be regarded as the requirement.

1.4.2 Equivalent values in parentheses shall not be considered as the requirement, because these values are approximate.

Copyright National Fire Protection Association
Provided by IHS under license with NFPA
No reproduction or networking permitted without license from IHS
Not for Resale

Chapter 2 Referenced Publications

2.1 General. The documents or portions thereof listed in this chapter are referenced within this standard and shall be considered part of the requirements of this document.

2.2 NFPA Publication. National Fire Protection Association, 1 Batterymarch Park, Quincy, MA 02169-7471.

NFPA 1500, *Standard on Fire Department Occupational Safety and Health Program*, 2002 edition.

2.3 Other Publications.

2.3.1 AATCC Publication. American Association of Textile Chemists and Colorists, P.O. Box 12215, Research Triangle Park, NC 27709.

AATCC 135, *Dimensional Changes in Automatic Home Laundering of Woven and Knit Fabrics*, 2001.

2.3.2 ANSI Publications. American National Standards Institute, 25 West 43rd Street, 4th Floor, New York, NY 10036.

ANSI Z87.1, *Occupational and Educational Eye and Face Protection*, 2003.

ANSI Z89.1, *Protective Headwear for Industrial Workers*, 2003.

2.3.3 ASTM Publications. American Society for Testing and Materials, 100 Barr Harbor Drive, West Conshohocken, PA 19428-2959.

ASTM B 117, *Standard Practice for Operating Salt Spray (Fog) Apparatus*, 2002.

ASTM B 152, *Standard Specification for Copper Sheet, Strip, Plate, and Rolled Bar*, 2000.

ASTM D 1424, *Standard Test Method for the Tear Resistance of Woven Fabrics by Falling Pendulum (Elmendorf) Apparatus*, 1983.

ASTM D 1630, *Standard Test Method for Rubber Property —Abrasion Resistance (Footwear Abrader)*, 2000.

ASTM D 1683, *Standard Test Method for Failure in Sewn Seams of Woven Fabrics*, 1990.

ASTM D 1776, *Standard Practice for Conditioning Textiles for Testing*, 1996.

ASTM D 3787, *Standard Test Method for Bursting Strength of Textiles — Constant-Rate-of-Traverse (CRT) Ball Burst Test*, 2001.

ASTM D 3940, *Standard Test Method for Bursting Strength (Load) and Elongation of Sewn Seams of Knit or Woven Stretch Textile Fabrics*, 1983.

ASTM D 4966, *Standard Test Method for Abrasion Resistance of Textile Fabrics*, 1998.

ASTM D 6413, *Standard Test Method for Flame Resistance of Textiles (Vertical Test)*, 1999.

ASTM E 809, *Standard Test Method for Measuring Photometric Characteristics of Retroreflectors*, 2002.

ASTM E 810, *Standard Test Method for Coefficient of Retroreflection of Retroreflective Sheeting Utilizing the Coplanar Method*, 2003.

ASTM E 991, *Standard Practice for Color Measurement of Fluorescent Specimens*, 1998.

ASTM E 2152, *Standard Practice for Computing the Colors of Fluorescent Objects from Bispectral Photometric Data*, 2001.

ASTM E 2153, *Standard Practice for Obtaining Bispectral Photometric Data for Evaluation of Fluorescent Color*, 2001.

ASTM F 489, *Standard Test Method for Using a James Machine*, 1996.

ASTM F 1060, *Standard Test Method for Thermal Protective Performance of Materials for Protective Clothing for Hot Surface Contact*, 2001.

ASTM F 1342, *Standard Test Method for Protective Clothing Material Resistance to Puncture*, 1996.

ASTM F 1414, *Standard Test Method for Measurement of Cut Resistance to Chain Saw in Lower Body (Legs) Protective Clothing*, 1999.

ASTM F 1790, *Standard Test Method for Measuring Cut Resistance of Materials Used in Protective Clothing*, 1997.

ASTM F 1868, *Standard Test Method for Thermal and Evaporative Resistance of Clothing Materials Using a Sweating Hot Plate*, 2002.

ASTM F 1897, *Standard Specification for Leg Protection for Chain Saw Users*, 1998.

ASTM F 1939, *Standard Test Method for Radiant Protective Performance of Flame Resistant Clothing Materials*, 1999a.

ASTM F 2010, *Standard Test Method for Evaluation of Glove Effects on Wearer Hand Dexterity Using Modified Pegboard Test*, 2000.

2.3.4 EN Publication. European Standard, BSI, Customer Services, 389 Chiswick High Road, London, W4 4AL, U.K.

EN 471, *High Visibility Warning Clothing for Professional Use. Test Methods and Requirements*, 2003.

2.3.5 ISO Publications. International Organization for Standardization, 1, rue de Varembé, Case postale 56, CH 1211 Genève 20, Switzerland.

ISO 27, *Guidelines for corrective action to be taken by a certification body in the event of misuse of its mark of conformity*, 1983.

ISO 65, *General requirements for bodies operating product certification systems*, 1996.

ISO 9001, *Quality management systems — requirements*, 2000.

ISO 17011, *General requirements for accreditation bodies accrediting conformity assessment bodies*, 2004.

ISO 17025, *General requirements for the competence of testing and calibration laboratories*, 1999.

ISO 17492, *Clothing for protection against heat and flame — determination of heat transmission on exposure to both flame and radiant heat*, 2004.

2.3.6 Military Specifications. Department of Defense Single Stock Point (DODSSP), Document Automation and Production Service, Building 4/D, 700 Robbins Avenue, Philadelphia, PA 19111-5094.

Federal Specifications V-F-106F, *Fasteners, Slide, Interlocking*, June 23, 1987.

Military Specification MS 27980F, *Fasteners, Snap, Style 2, of Fasteners, Snap*, MIL-F-10884G, November 30, 1984.

Military Specification A-A-55126, *Fastener Tapes, Hook and Pile, Synthetic*, December 16, 1987.

2.3.7 U.S. Government Publication. U.S. Government Printing Office, Washington, DC 20402.

Title 29, Code of Federal Regulations, Part 1910.132, "Personal Protective Equipment," 1994.

Copyright National Fire Protection Association
Provided by IHS under license with NFPA
No reproduction or networking permitted without license from IHS
Not for Resale

Chapter 3 Definitions

3.1 General. The definitions contained in this chapter shall apply to the terms used in this standard. Where terms are not defined in this chapter or within another chapter, they shall be defined using their ordinarily accepted meanings within the context in which they are used. *Merriam-Webster's Collegiate Dictionary,* 11th edition, shall be the source for the ordinarily accepted meaning.

3.2 NFPA Official Definitions.

3.2.1* Approved. Acceptable to the authority having jurisdiction.

3.2.2* Authority Having Jurisdiction (AHJ). An organization, office, or individual responsible for enforcing the requirements of a code or standard, or for approving equipment, materials, an installation, or a procedure.

3.2.3 Labeled. Equipment or materials to which has been attached a label, symbol, or other identifying mark of an organization that is acceptable to the authority having jurisdiction and concerned with product evaluation, that maintains periodic inspection of production of labeled equipment or materials, and by whose labeling the manufacturer indicates compliance with appropriate standards or performance in a specified manner.

3.2.4* Listed. Equipment, materials, or services included in a list published by an organization that is acceptable to the authority having jurisdiction and concerned with evaluation of products or services, that maintains periodic inspection of production of listed equipment or materials or periodic evaluation of services, and whose listing states that either the equipment, material, or service meets appropriate designated standards or has been tested and found suitable for a specified purpose.

3.2.5 Shall. Indicates a mandatory requirement.

3.2.6 Should. Indicates a recommendation or that which is advised but not required.

3.2.7 Standard. A document, the main text of which contains only mandatory provisions using the word "shall" to indicate requirements and which is in a form generally suitable for mandatory reference by another standard or code or for adoption into law. Nonmandatory provisions shall be located in an appendix or annex, footnote, or fine-print note and are not to be considered a part of the requirements of a standard.

3.3* General Definitions.

3.3.1 Back Length. Upper torso garment measurement at center back from bottom of collar to bottom edge of garment.

3.3.2 Back Rise. Lower torso garment measurement from crotch seam to top of waistband at back center.

3.3.3 Bottom Circumference. Measurement of upper or lower torso garment along bottom edge of the garment from folded edge to folded edge, and multiplied by 2 to obtain circumference.

3.3.4 Brim. A part of the shell of the helmet extending outward around the entire circumference of the helmet.

3.3.5 Certification/Certified. A system whereby a certification organization determines that a manufacturer has demonstrated the ability to produce a product that complies with the requirements of this standard, authorizes the manufacturer to use a label on listed products that comply with the requirements of this standard, and establishes a follow-up program conducted by the certification organization as a check of the methods the manufacturer uses to determine continued compliance of labeled and listed products with the requirements of this standard.

3.3.6 Certification Organization. An independent, third-party organization that determines product compliance with the requirements of this standard with a labeling/ listing/follow-up program.

3.3.7 Chain Saw Protectors. See 3.3.99, Wildland Fire Fighting Chain Saw Protection.

3.3.8 Char. The formation of a brittle residue where the material is exposed to thermal energy.

3.3.9 Chest Circumference. Measurement of upper torso garment from folded edge to folded edge, at base of armholes, and multiplied by 2 to obtain circumference.

3.3.10 Chin Strap. An adjustable strap for the helmet that fits under the chin to secure the helmet to the head.

3.3.11 Cold Weather Outerwear. See 3.3.101, Wildland Fire Fighting Protective Cold Weather Outerwear.

3.3.12 Collar Length. Upper torso garment measurement along top of collar from point-to-point.

3.3.13 Collar Width. Upper torso garment measurement at center back from top edge of unfolded collar to the bottom collar seam.

3.3.14 Compliance/Compliant. Meeting or exceeding all applicable requirements of this standard.

3.3.15* Component(s). Any material, part, or subassembly used in the construction of the compliant product.

3.3.16 Composite. The layer or layers of materials or components.

3.3.17 Crown. The portion of the helmet that covers the head above the reference plane.

3.3.18 Crown Straps. The part of the helmet suspension that passes over the head.

3.3.19 Cuff. Finished edge of sleeve openings of protective garments.

3.3.20 Cuff Circumference. Measurement of torso garment cuff along bottom of opening from folded edge to folded edge, and multiplied by 2 to obtain circumference.

3.3.21 Drip. To run or fall in drops or blobs.

3.3.22 Ease. The size requirements and tolerance of garments that allow good fit and do not inhibit the natural body movements or the performance of job-related tasks.

3.3.23 Eyelets. Reinforced holes placed in the footwear upper throat through which laces are threaded to secure the footwear to the wearer.

3.3.24 Eyerow. The row of eyelets.

3.3.25 Face/Neck Shroud. See 3.3.102, Wildland Fire Fighting Protective Face/Neck Shroud.

3.3.26 Flame Resistance. The property of a material whereby combustion is prevented, terminated, or inhibited following the application of a flaming or nonflaming source of ignition, with or without subsequent removal of the ignition source.

Copyright National Fire Protection Association
Provided by IHS under license with NFPA
No reproduction or networking permitted without license from IHS
Not for Resale

Flame resistance can be an inherent property of a material, or it can be imparted by specific treatment. *(See also 3.3.43, Inherent Flame Resistance.)*

3.3.27 Fluorescence. A process by which radiant flux of certain wavelengths is absorbed and reradiated nonthermally in other, usually longer wavelengths.

3.3.28 Follow-Up Program. The sampling, inspections, test, or other measures conducted by a certification organization on a periodic basis to determine the continued compliance of labeled and listed products that are being produced by the manufacturer to the requirements of the standard.

3.3.29 Footwear. See 3.3.103, Wildland Fire Fighting Protective Footwear.

3.3.30 Footwear Upper. That portion of the footwear element above the sole, heel, and insole.

3.3.31 Front Length. Upper torso garment measurement from bottom collar seam to the bottom edge of the garment at front edge.

3.3.32 Front Rise. Lower torso garment measurement from crotch seam to top of waistband at front center.

3.3.33 Front Waist Pocket(s). Slanted or side seam opening pockets that open to the exterior, located at or near the front waist of a garment.

3.3.34 Garment. See 3.3.104, Wildland Fire Fighting Protective Garments.

3.3.35 Gloves. See 3.3.105, Wildland Fire Fighting Protective Gloves.

3.3.36 Goggle Clip. The component of the helmet that retains the strap of the goggles or headlamp.

3.3.37 Goggles. See 3.3.106, Wildland Fire Fighting Protective Goggles.

3.3.38 Hardware. Nonfabric components of the protective clothing and equipment including, but not limited to, those made of metal or plastic.

3.3.39 Headform. A device that simulates the configuration of the human head.

3.3.40 Heel Breast. The forward face of the footwear heel.

3.3.41 Helmet. See 3.3.107, Wildland Fire Fighting Protective Helmet.

3.3.42 Helmet Shell. A helmet without the suspension system, accessories, and fittings.

3.3.43 Inherent Flame Resistance. Flame resistance that is derived from the essential characteristics of the fiber or polymer.

3.3.44 Inseam Length. Lower torso garment measurement along inseam from crotch seam to bottom edge of cuff.

3.3.45 Insole. The inner component of the footwear upon which the foot rests.

3.3.46 Interlining. Any textile that is incorporated into any garment as a layer between the outer and inner layers.

3.3.47 Jacket. See 3.3.108, Wildland Fire Fighting Protective Jacket.

3.3.48 Knee Circumference. Lower torso garment measurement 355 mm (14 in.) below crotch seam, from folded edge to folded edge, and multiplied by 2 to obtain circumference.

3.3.49 Liner. An inner component of a helmet or garment designed to provide warmth.

3.3.50 Lining. Any material that is permanently attached and used to cover or partially cover the inside surface area of a protective garment.

3.3.51 Load Carrying Protective Equipment. See 3.3.109, Wildland Fire Fighting Protective Load Carrying Equipment.

3.3.52 Lower Torso. The area of the body trunk below the waist, excluding the legs, ankles, and feet.

3.3.53 Manufacturer. The entity that assumes the liability, provides the warranty for the compliant product, or obtains the product certification.

3.3.54 Melt. A response to heat causing a change from solid to liquid, or become consumed.

3.3.55 Nape Device. A component located below the Bitragion Inion Arc used to aid in helmet retention.

3.3.56 Neck Circumference. Upper torso measurement from folded edge to folded edge at the midpoint of the collar width with the garment front closure closed at the top and the top edges of the collar in horizontal alignment, and multiplied by 2 to obtain the circumference.

3.3.57 Neck Shroud. See 3.3.102, Wildland Fire Fighting Protective Face/Neck Shroud.

3.3.58 One-Piece Garment. See 3.3.110, Wildland Fire Fighting Protective One-Piece Garment.

3.3.59 Product Label. A marking provided by the manufacturer of each compliant product containing compliance statements, certification statements, manufacturer and model information, or similar data. The product label is not the certification organization's label, symbol, or identifying mark; however, the certification organization's label, symbol, or identifying mark is attached to or part of the product label.

3.3.60 Protective Clothing and Equipment. See 3.3.100, Wildland Fire Fighting Protective Clothing and Equipment.

3.3.61 Protective Cold Weather Outerwear. See 3.3.101, Wildland Fire Fighting Protective Cold Weather Outerwear.

3.3.62 Protective Face/Neck Shroud. See 3.3.102, Wildland Fire Fighting Protective Face/Neck Shroud.

3.3.63 Protective Footwear. See 3.3.103, Wildland Fire Fighting Protective Footwear.

3.3.64 Protective Garment. See 3.3.104, Wildland Fire Fighting Protective Garments.

3.3.65 Protective Gloves. See 3.3.105, Wildland Fire Fighting Protective Gloves.

3.3.66 Protective Goggles. See 3.3.106, Wildland Fire Fighting Protective Goggles.

3.3.67 Protective Helmet. See 3.3.107, Wildland Fire Fighting Protective Helmet.

3.3.68 Protective Jacket. See 3.3.108, Wildland Fire Fighting Protective Jacket.

3.3.69 Protective One-Piece Garment. See 3.3.110, Wildland Fire Fighting Protective One-Piece Garment.

3.3.70 Protective Shirt. See 3.3.111, Wildland Fire Fighting Protective Shirt.

Copyright National Fire Protection Association
Provided by IHS under license with NFPA
No reproduction or networking permitted without license from IHS
Not for Resale

3.3.71 Protective Trousers. See 3.3.112, Wildland Fire Fighting Protective Trousers.

3.3.72 Proximity Fire Fighting. Specialized fire-fighting operations that can include the activities of rescue, fire suppression, and property conservation at incidents involving fires producing very high levels of radiant heat as well as conductive and convective heat.

3.3.73 Radiant Protective Performance (RPP). The resistance of a material to radiant heat, measured in seconds, when exposed to a vertically oriented radiant heat source, positioned at a specific horizontal distance from the vertical placement of the protective material, sufficient to cause a second-degree burn to human tissue.

3.3.74 Retroreflection. The reflection of light in which the reflected rays are preferentially returned in the direction close to the opposite of the direction of the incident rays, with this property being maintained over wide variations of the direction of the incident rays.

3.3.75 Sample. (1) The ensemble, element, item, or component that is conditioned for testing. (2) Ensembles, elements, items, or components that are randomly selected from the manufacturer's production line, from the manufacturer's inventory, or from the open market.

3.3.76 Seams.

3.3.76.1 ***Seam Assembly.*** The structure obtained when fabrics are joined by means of a seam.

3.3.76.2* ***Seams (Major).*** Those seam assemblies where rupture exposes the wearer to immediate danger.

3.3.76.3* ***Seams (Minor).*** Those seam assembly constructions where rupture does not expose the wearer to immediate danger.

3.3.77 Seat Circumference. Lower torso garment measurement from 25 mm (1 in.) above bottom of fly curve from folded edge to folded edge, multiplied by 2 to obtain circumference.

3.3.78 Separate. A material response evidenced by splitting or delaminating.

3.3.79 Sewn Seam Strength. The maximum resistance to rupture of the junction formed by stitching together two or more planar structures, such as textile fabrics.

3.3.80 Shank. The component of footwear that provides additional support to the instep.

3.3.81 Shell. A helmet without the suspension system, accessories, and fittings.

3.3.82 Shirt. See 3.3.111, Wildland Fire Fighting Protective Shirt.

3.3.83 Shroud. See 3.3.102, Wildland Fire Fighting Protective Face/Neck Shroud.

3.3.84 Sleeve Length. Upper torso garment measurement from center back at bottom of collar seam diagonally across back and down sleeve to bottom edge of cuff. In other specified instances, it is a measurement from center sleeve setting seam at shoulder to bottom edge of sleeve.

3.3.85 Specimen. The conditioned ensemble, element, item, or component that is tested. Specimens are taken from samples.

3.3.86 Structural Fire Fighting. The activities of rescue, fire suppression, and property conservation in buildings, enclosed structures, vehicles, marine vessels, or like properties that are involved in a fire or emergency situation.

3.3.87 Textile Fabric. A planar structure consisting of yarns or fibers.

3.3.88 Thermal Protective Performance (TPP). A numerical value indicating the resistance of materials to convective and radiant heat exposure.

3.3.89 Thigh Circumference. Lower torso garment measurement at crotch line from folded edge to folded edge, and multiplied by 2 to obtain circumference.

3.3.90 Throat. The center of the footwear entrance area behind the gusset, from its top line to the lowest point where it attaches to the vamp.

3.3.91 Top Line. The top edge of the protective footwear that includes the tongue, gusset, quarter, collar, and shaft.

3.3.92 Trim. Material attached to the exterior surface of protective clothing or equipment to enhance visibility. Retroreflective materials enhance night time visibility, and fluorescent materials enhance daytime visibility.

3.3.93 Trousers. See 3.3.112, Wildland Fire Fighting Protective Trousers.

3.3.94 Upper Torso. The area of the body trunk above the waist and extending to the shoulder, excluding the arms, wrists, and hands.

3.3.95 Vertical Circumference. One-piece garment measurement from junction of shoulder/collar seam down to the bottom of the crotch, and multiplied by 2 to obtain circumference.

3.3.96 Waist Circumference. A garment measurement from top edge of waistband from folded edge to folded edge, and multiplied by 2 to obtain circumference.

3.3.97 Wear Surface. The bottom of the footwear sole, including the heel.

3.3.98 Wildland Fire Fighting. The activities of fire suppression and property conservation in woodlands, forests, grasslands, brush, prairies, and other such vegetation, or any combination of vegetation, that is involved in a fire situation but is not within buildings or structures.

3.3.99 Wildland Fire Fighting Chain Saw Protection. Items of protective equipment that provides protection to the legs, or to the lower torso and legs, excluding the ankles and feet.

3.3.100* Wildland Fire Fighting Protective Clothing and Equipment. Items of compliant protective clothing and equipment products that provide protection from some risks, but not all risks, of emergency incident operations.

3.3.101 Wildland Fire Fighting Protective Cold Weather Outerwear. Items of protective clothing that provides protection to the upper or lower torso, arms, and legs to provide insulation for warmth of the wearer during cold weather.

3.3.102 Wildland Fire Fighting Protective Face/Neck Shroud. Items of protective clothing that provides protection to the face and neck area.

3.3.103 Wildland Fire Fighting Protective Footwear. Items of protective clothing that provides protection to the foot, ankle, and lower leg.

--`,,,```-`-`,,`,,`,`,,`---

Copyright National Fire Protection Association
Provided by IHS under license with NFPA
No reproduction or networking permitted without license from IHS
Not for Resale

3.3.104* Wildland Fire Fighting Protective Garments. Items of protective clothing that provide protection to the wearer's upper or lower torso, excluding the hands, face, and feet.

3.3.105 Wildland Fire Fighting Protective Gloves. Items of protective clothing that provides protection to the hands and wrists.

3.3.106 Wildland Fire Fighting Protective Goggles. Items of protective equipment that provides protection to the eyes and a portion of the face.

3.3.107 Wildland Fire Fighting Protective Helmet. Items of protective equipment that provides protection to the head.

3.3.108 Wildland Fire Fighting Protective Jacket. The protective outer garment item that provides protection to the upper torso and arms, excluding the hands and head.

3.3.109 Wildland Fire Fighting Protective Load Carrying Equipment. Items of protective equipment that are worn by the wildland fire fighter to facilitate the carrying of gear.

3.3.110 Wildland Fire Fighting Protective One-Piece Garment. The single-piece protective garment item that provides protection to the upper and lower torso, arms, and legs, excluding the head, hands, and feet.

3.3.111 Wildland Fire Fighting Protective Shirt. A protective garment item that provides protection to the upper torso and arms, excluding the head and hands.

3.3.112 Wildland Fire Fighting Protective Trousers. A protective garment item that provides protection to the lower torso and legs, excluding the feet.

Chapter 4 Certification

4.1 General.

4.1.1 The process of certification for protective clothing and equipment as being compliant with NFPA 1977 shall meet the requirements of Section 4.1, General; Section 4.2, Certification Program; Section 4.3, Inspection and Testing; Section 4.4, Annual Verification of Product Compliance; Section 4.5, Manufacturers' Quality Assurance Program; Section 4.6, Hazards Involving Compliant Product; Section 4.7, Manufacturers' Investigation of Complaints and Returns; and Section 4.8, Manufacturers' Safety Alert and Product Recall Systems.

4.1.2 All compliant protective clothing and equipment that are labeled as being compliant with this standard shall meet or exceed all applicable requirements specified in this standard and shall be certified.

4.1.2.1 The wildland fire fighting protective face/neck shroud shall be certified to the requirements specified in Sections 6.5 and 7.5 with a specific compliant wildland fire fighting protective helmet or helmets.

4.1.3 All certification shall be performed by a certification organization that meets at least the requirements specified in Section 4.2, Certification Program and that is accredited for personal protective equipment in accordance with ISO 65, *General requirements for bodies operating product certification systems.* The accreditation shall be issued by an accreditation body operating in accordance with ISO 17011, *General requirements for accreditation bodies accrediting conformity assessment bodies.*

4.1.4 Manufacturers shall not claim compliance with portions or segments of the requirements of this standard and shall not use the NFPA name or the name or identification of this standard, NFPA 1977, in any statements about their respective product(s) unless the product(s) is certified as compliant to this standard.

4.1.5 All compliant protective clothing and equipment shall be labeled and listed.

4.1.6 All compliant protective clothing and equipment shall also have a product label that meets the requirements specified in 5.1.1, 5.2.1, 5.3.1, 5.4.1, 5.5.1, 5.6.1, 5.7.1, and 5.8.1.

4.1.7* The certification organization's label, symbol, or identifying mark shall be attached to the product label, or shall be part of the product label, or shall be immediately adjacent to the product label.

4.1.8 The certification organization shall not issue any new certifications to the 1998 edition of this standard on or after the NFPA effective date for the 2005 edition, which is February 7, 2005.

4.1.9 The certification organization shall not permit any manufacturer to continue to label any protective clothing and equipment that are certified as compliant with the 1998 edition of this standard on or after September 1, 2005.

4.1.10 The certification organization shall require manufacturers to remove all certification labels and product labels indicating compliance with the 1998 edition of this standard from all protective clothing and equipment that are under the control of the manufacturer on September 1, 2005, and the certification organization shall verify that this action is taken.

4.2 Certification Program.

4.2.1* The certification organization shall not be owned or controlled by manufacturers or vendors of the product being certified.

4.2.2 The certification organization shall be primarily engaged in certification work and shall not have a monetary interest in the product's ultimate profitability.

4.2.3 The certification organization shall be accredited for personal protective equipment in accordance with ISO 65, *General requirements for bodies operating product certification systems.* The accreditation shall be issued by an accreditation body operating in accordance with ISO 17011, *General requirements for accreditation bodies accrediting conformity assessment bodies.*

4.2.4 The certification organization shall refuse to certify products to this standard that do not comply with all applicable requirements of this standard.

4.2.5* The contractual provisions between the certification organization and the manufacturer shall specify that certification is contingent on compliance with all applicable requirements of this standard.

4.2.5.1 The certification organization shall not offer or confer any conditional, temporary, or partial certifications.

4.2.5.2 Manufacturers shall not be authorized to use any label or reference to the certification organization on products that are not compliant with all applicable requirements of this standard.

4.2.6* The certification organization shall have laboratory facilities and equipment available for conducting proper tests to determine product compliance.

Copyright National Fire Protection Association
Provided by IHS under license with NFPA
No reproduction or networking permitted without license from IHS
Not for Resale

4.2.6.1 The certification organization laboratory facilities shall have a program in place and functioning for calibration of all instruments, and procedures shall be in use to ensure proper control of all testing.

4.2.6.2 The certification organization laboratory facilities shall follow good practice regarding the use of laboratory manuals, form data sheets, documented calibration and calibration routines, performance verification, proficiency testing, and staff qualification and training programs.

4.2.7 The certification organization shall require the manufacturer to establish and maintain a quality assurance program that meets the requirements of Section 4.5, Manufacturers' Quality Assurance Program.

4.2.7.1* The certification organization shall require the manufacturer to have a product recall system specified in Section 4.8, Manufacturers' Safety Alert and Product Recall Systems, as part of the manufacturer's quality assurance program.

4.2.7.2 The certification organization shall audit the manufacturer's quality assurance program to ensure that the quality assurance program provides continued product compliance with this standard.

4.2.8 The certification organization and the manufacturer shall evaluate any changes affecting the form, fit, or function of the compliant product to determine its continued certification to this standard.

4.2.9* The certification organization shall have a follow-up inspection program of the manufacturer's facilities of the compliant product with at least two random and unannounced visits per 12-month period to verify the product's continued compliance.

4.2.9.1 As part of the follow-up inspection program, the certification organization shall select sample compliant product at random from the manufacturer's production line, from the manufacturer's in-house stock, or from the open market.

4.2.9.2 Sample product shall be evaluated by the certification organization to verify the product's continued compliance in order to assure that the materials, components, and manufacturing quality assurance systems are consistent with the materials, components, and manufacturing quality assurance that were inspected and tested by the certification organization during initial certification and recertification.

4.2.9.3 The certification organization shall be permitted to conduct specific testing to verify the product's continued compliance.

4.2.9.4 For products, components, and materials where prior testing, judgment, and experience of the certification organization have shown results to be in jeopardy of not complying with this standard, the certification organization shall conduct more frequent testing of sample product, components, and materials acquired in accordance with 4.2.9.1 against the applicable requirements of this standard.

4.2.10 The certification organization shall have in place a series of procedures, as specified in Section 4.6, Hazards Involving Compliant Product, that address report(s) of situation(s) in which a compliant product is subsequently found to be hazardous.

4.2.11 The certification organization's operating procedures shall provide a mechanism for the manufacturer to appeal decisions. The procedures shall include the presentation of information from both sides of a controversy to a designated appeals panel.

4.2.12 The certification organization shall be in a position to use legal means to protect the integrity of its name and label. The name and label shall be registered and legally defended.

4.3 Inspection and Testing.

4.3.1 For both initial certification and recertification of protective clothing and equipment, the certification organization shall conduct both inspection and testing as specified in this section.

4.3.2 All inspections, evaluations, conditioning, and testing for certification or for recertification shall be conducted by a certification organization's testing laboratory that is accredited in accordance with the requirements of ISO 17025, *General requirements for the competence of testing and calibration laboratories*.

4.3.2.1 The certification organization's testing laboratory's scope of accreditation to ISO 17025, *General requirements for the competence of testing and calibration laboratories*, shall encompass testing of personal protective equipment.

4.3.2.2 The accreditation of a certification organization's testing laboratory shall be issued by an accreditation body operating in accordance with ISO 17011, *General requirements for accreditation bodies accrediting conformity assessment bodies*.

4.3.3 A certification organization shall be permitted to utilize conditioning and testing results conducted by a product or component manufacturer for certification or recertification provided the manufacturer's testing laboratory meets the requirements specified in 4.3.3.1 through 4.3.3.5.

4.3.3.1 The manufacturer's testing laboratory shall be accredited in accordance with the requirements of ISO 17025, *General requirements for the competence of testing and calibration laboratories*.

4.3.3.2 The manufacturer's testing laboratory's scope of accreditation to ISO 17025, *General requirements for the competence of testing and calibration laboratories*, shall encompass testing of personal protective equipment.

4.3.3.3 The accreditation of a manufacturer's testing laboratory shall be issued by an accreditation body operating in accordance with ISO 17011, *General requirements for accreditation bodies accrediting conformity assessment bodies*.

4.3.3.4 The certification organization shall approve the manufacturer's testing laboratory.

4.3.3.5 The certification organization shall determine the level of supervision and witnessing of the conditioning and testing for certification or recertification conducted at the manufacturer's testing laboratory.

4.3.4 Sampling levels for testing and inspection shall be established by the certification organization and the manufacturer to ensure a reasonable and acceptable reliability at a reasonable and acceptable confidence level that products certified to this standard are compliant, unless such sampling levels are specified herein.

4.3.5 Inspection by the certification organization shall include a review of all product labels to ensure that all required label attachments, compliance statements, certification statements, and other product information are at least as specified for the protective clothing and equipment in 5.1.1, 5.2.1, 5.3.1, 5.4.1, 5.5.1, 5.6.1, 5.7.1, and 5.8.1.

Copyright National Fire Protection Association
Provided by IHS under license with NFPA
No reproduction or networking permitted without license from IHS
Not for Resale

4.3.6 Inspection by the certification organization shall include an evaluation of any symbols and pictorial graphic representations used on product labels or in user information, as permitted in 5.1.1.6, 5.2.1.6, 5.3.1.6, 5.4.1.6, 5.5.1.6, 5.6.1.6, 5.7.1.6, and 5.8.1.6 to ensure that the symbols are clearly explained in the product's user information package.

4.3.7 Inspection by the certification organization shall include a review of the user information required by 5.1.2, 5.2.2, 5.3.2, 5.4.2, 5.5.2, 5.6.2, 5.7.2, and 5.8.2 to ensure that the information has been developed and is available.

4.3.8 Inspection and evaluation by the certification organization for determining compliance with the design requirements specified in Chapter 6 shall be performed on whole or complete products.

4.3.9 Testing to determine product compliance with the performance requirements specified in Chapter 7 shall be conducted by the certification organization in accordance with the specified testing requirements of Chapter 8.

4.3.9.1 Testing shall be performed on specimens representative of materials and components used in the actual construction of the protective clothing and equipment.

4.3.9.2 The certification organization also shall be permitted to use sample materials cut from a representative product.

4.3.10 The certification organization shall accept from the manufacturer, for evaluation and testing for certification, only product or product components that are the same in every respect to the actual final product or product component.

4.3.11 The certification organization shall not allow any modifications, pretreatment, conditioning, or other such special processes of the product or any product component prior to the product's submission for evaluation and testing by the certification organization.

4.3.12 The certification organization shall not allow the substitution, repair, or modification, other than as specifically permitted herein, of any product or any product component during testing.

4.3.13 The certification organization shall not allow test specimens that have been conditioned and tested for one method to be reconditioned and tested for another test method unless specifically permitted in the test method.

4.3.14 Any change in the design, construction, or material of a compliant product shall necessitate new inspection and testing to verify compliance to all applicable requirements of this standard that the certification organization determines can be affected by such change. This recertification shall be conducted before labeling the modified product as being compliant with this standard.

4.3.15 The manufacturer shall maintain all design and performance inspection and test data from the certification organization used in the certification of the manufacturer's compliant product. The manufacturer shall provide such data, upon request, to the purchaser or authority having jurisdiction.

4.4 Annual Verification of Product Compliance.

4.4.1 All protective clothing and equipment that are labeled as being compliant with this standard shall undergo recertification on an annual basis. This recertification shall include the following:

(1) Inspection and evaluation to all design requirements as required by this standard on all manufacturer models and components
(2) Testing to all performance requirements as required by this standard on all manufacturer models and components with the following protocol:
   (a) Where a test method incorporates testing both before and after the laundering preconditioning specified in 8.1.2 and the test generates quantitative results, recertification testing shall be limited to the conditioning that yielded the worst-case test result during the initial certification for the model or component.
   (b) Where a test method incorporates testing both before and after laundering preconditioning specified in 8.1.2 and the test generates nonquantitive results (e.g., pass/fail for melt/drip), recertification shall be limited to a single conditioning procedure in any given year. Subsequent annual recertifications shall cycle through the remaining conditioning procedures to ensure that all required conditionings are included over time.
   (c) Where a test method requires the testing of three specimens, a minimum of one specimen shall be tested for annual recertification.
   (d) Where a test method requires the testing of five or more specimens, a minimum of two specimens shall be tested for annual recertification.

4.4.2 Samples of manufacturer models and components for recertification acquired from the manufacturer or component supplier during random and unannounced visits as part of the follow-up inspection program in accordance with 4.2.9 shall be permitted to be used toward annual recertification.

4.4.2.1 For recertification, the certification organization shall acquire at least one complete item of protective clothing or equipment.

4.4.2.2 The certification organization shall also acquire a sufficient quantity of components to be tested for recertification as required by 4.4.3.

4.4.3 Protective clothing, equipment, and components shall be inspected, evaluated, and tested as specified in 4.4.3.1 and 4.4.3.2.

4.4.3.1 One sample of each protective clothing and equipment item shall be inspected and evaluated to each of the design requirements specified in Chapter 6.

4.4.3.2 One sample of each protective clothing and equipment item and components shall be tested for overall performance as specified in Chapter 7.

4.4.4 The manufacturer shall maintain all design, inspection, performance, and test data from the certification organization produced during the recertification of manufacturers' models and components. The manufacturer shall provide such data, upon request, to the purchaser or to the authority having jurisdiction.

4.5 Manufacturers' Quality Assurance Program.

4.5.1 The manufacturer shall provide and operate a quality assurance program that meets the requirements of this section and that includes a product recall system as specified in 4.2.7.1 and Section 4.8, Manufacturers' Safety Alert and Product Recall Systems.

Copyright National Fire Protection Association
Provided by IHS under license with NFPA
No reproduction or networking permitted without license from IHS
Not for Resale

4.5.2 The manufacturer shall be registered to ISO 9001, *Quality management systems — requirements*.

4.5.3 The operation of the quality assurance program shall evaluate and test compliant product production against this standard to ensure that production remains in compliance.

4.6 Hazards Involving Compliant Product.

4.6.1* The certification organization shall establish procedures to be followed where situation(s) are reported in which a compliant product is subsequently found to be hazardous. These procedures shall comply with the provisions of ISO 27, *Guidelines for corrective action to be taken by a certification body in the event of misuse of its mark of conformity*, and as modified herein.

4.6.2* Where a report of a hazard involved with a compliant product is received by the certification organization, the validity of the report shall be investigated.

4.6.3 With respect to a compliant product, a hazard shall be a condition, or create a situation, which results in exposing life, limb, or property to an imminently dangerous or dangerous condition.

4.6.4 Where a specific hazard is identified, the determination of the appropriate action for the certification organization and the manufacturer to undertake shall take into consideration the severity of the hazard and its consequences to the safety and health of users.

4.6.5 Where it is established that a hazard is involved with a compliant product, the certification organization shall determine the scope of the hazard including products, model numbers, serial numbers, factory production facilities, production runs, and quantities involved.

4.6.6 The certification organization's investigation shall include, but not be limited to, the extent and scope of the problem as it might apply to other compliant product or compliant product components manufactured by other manufacturers or certified by other certification organizations.

4.6.7 The certification organization shall also investigate reports of a hazard where compliant product is gaining widespread use in applications not foreseen when the standard was written, such applications in turn being ones for which the product was not certified, and no specific scope of application has been provided in the standard, and no limiting scope of application was provided by the manufacturer in written material accompanying the compliant product at the point of sale.

4.6.8 The certification organization shall require the manufacturer of the compliant product or the manufacturer of the compliant product component, if applicable, to assist the certification organization in the investigation and to conduct its own investigation as specified in Section 4.7, Manufacturers' Investigation of Complaints and Returns.

4.6.9 Where the facts indicating a need for corrective action are conclusive and the certification organization's appeal procedures referenced in 4.2.11 have been followed, the certification organization shall initiate corrective action immediately, provided there is a manufacturer to be held responsible for such action.

4.6.10 Where the facts are conclusive and corrective action is indicated, but there is no manufacturer to be held responsible, such as when the manufacturer is out of business or the manufacturer is bankrupt, the certification organization shall immediately notify relevant governmental and regulatory agencies and issue a notice to the user community about the hazard.

4.6.11* Where the facts are conclusive and corrective action is indicated, the certification organization shall take one or more of the following corrective actions:

(1) Notification of parties authorized and responsible for issuing a safety alert when, in the opinion of the certification organization, such a notification is necessary to inform the users.
(2) Notification of parties authorized and responsible for issuing a product recall when, in the opinion of the certification organization, such a recall is necessary to protect the users.
(3) Removing the mark of certification from the product.
(4) Where a hazardous condition exists and it is not practical to implement 4.6.11(1), 4.6.11(2), or 4.6.11(3), or the responsible parties refuse to take corrective action, the certification organization shall notify relevant governmental and regulatory agencies and issue a notice to the user community about the hazard.

4.6.12 The certification organization shall provide a report to the organization or individual identifying the reported hazardous condition and notify them of the corrective action indicated, or that no corrective action is indicated.

4.6.13* Where a change to an NFPA standard(s) is felt to be necessary, the certification organization shall also provide a copy of the report and corrective actions indicated to the NFPA, and shall also submit either a Public Proposal for a proposed change to the next revision of the applicable standard, or a proposed Temporary Interim Amendment (TIA) to the current edition of the applicable standard.

4.7 Manufacturers' Investigation of Complaints and Returns.

4.7.1 Manufacturers shall provide corrective action in accordance with ISO 9001, *Quality management systems — requirements*, for investigating written complaints and returned products.

4.7.2 Manufacturers' records of returns and complaints related to safety issues shall be retained for at least 5 years.

4.7.3 Where the manufacturer discovers, during the review of specific returns or complaints, that a compliant product or compliant product component can constitute a potential safety risk to end users that is possibly subject to a safety alert or product recall, the manufacturer shall immediately contact the certification organization and provide all information about their review to assist the certification organization with their investigation.

4.8 Manufacturers' Safety Alert and Product Recall Systems.

4.8.1 Manufacturers shall establish a written safety alert system and a written product recall system that describes the procedures to be used in the event that it decides, or is directed by the certification organization, to either issue a safety alert or to conduct a product recall.

4.8.2 The manufacturers' safety alert and product recall system shall provide the following:

(1) The establishment of a coordinator and responsibilities by the manufacturer for the handling of safety alerts and product recalls

Copyright National Fire Protection Association
Provided by IHS under license with NFPA
No reproduction or networking permitted without license from IHS
Not for Resale

(2) A method of notifying all dealers, distributors, purchasers, users, and the NFPA about the safety alert or product recall that can be initiated within a 1-week period following the manufacturer's decision to issue a safety alert or to conduct a product recall, or after the manufacturer has been directed by the certification organization to issue a safety alert or conduct a product recall
(3) Techniques for communicating accurately and understandably the nature of the safety alert or product recall and in particular the specific hazard or safety issue found to exist
(4) Procedures for removing product that is recalled and for documenting the effectiveness of the product recall
(5) A plan for repairing, replacing, or compensating purchasers for returned product

Chapter 5 Labeling and Information

5.1 Protective Garments.

5.1.1 Product Label Requirements.

5.1.1.1 Each garment shall have a product label or labels permanently and conspicuously attached. At least one product label shall be conspicuously located inside each garment when the garment is properly assembled with all layers and components in place.

5.1.1.2 Configuration of the product label and attachment of the product label shall not interfere with the legibility of any printed portion of the product label.

5.1.1.3 Multiple label pieces shall be permitted in order to carry all statements and information required to be on the product label.

5.1.1.4* The certification organization's label, symbol, or identifying mark shall be permanently attached to the product label or shall be part of the product label.

5.1.1.5 All worded portions of the required product label shall be printed at least in English.

5.1.1.6 Symbols and other pictorial graphic representations shall be permitted to be used to supplement or in place of worded statements on the product label(s) where explanations for symbols and pictorial graphic representations are explained in the user information.

5.1.1.7 The following statement shall be printed legibly on the product label, and all letters shall be at least 2.5 mm (3⁄32 in.) high:

"THIS WILDLAND FIRE FIGHTING PROTECTIVE GARMENT MEETS THE REQUIREMENTS OF NFPA 1977, STANDARD ON PROTECTIVE CLOTHING AND EQUIPMENT FOR WILDLAND FIRE FIGHTING, 2005 EDITION.

DO NOT REMOVE THIS LABEL."

5.1.1.8 At least the following information shall also be printed legibly on the product label, with all letters at least 2 mm (1⁄16 in.) high:

(1) Manufacturer's name, identification, or designation
(2) Manufacturer's address
(3) Country of manufacture
(4) Manufacturer's garment identification number, lot number, or serial number
(5) Month and year of manufacture (not coded)
(6) Model or style name, number, or design
(7) Size
(8) Garment materials and percent content
(9) Cleaning precautions

5.1.2 User Information.

5.1.2.1 The garment manufacturer shall provide at least the user information that is specified in 5.1.2.5 with each garment.

5.1.2.2 The garment manufacturer shall attach the required user information or packaging containing the user information to the garment in such a manner that it is not possible to use the garment without being aware of the availability of the information.

5.1.2.3 The required user information or packaging containing the user information shall be attached to the garment so that a deliberate action is necessary to remove it. The garment manufacturer shall provide notice that the user information is to be removed ONLY by the end user.

5.1.2.4 Symbols and other pictorial graphic representations shall be permitted to be used to supplement or in place of worded statements where explanations for symbols and pictorial graphic representations are explained in the user information.

5.1.2.5 The garment manufacturer shall provide at least the following instructions and information with each garment:

(1) Pre-use information
  (a) Safety considerations
  (b) Limitations of use
  (c) Garment marking recommendations and restrictions
  (d) A statement that most performance properties of the garment cannot be tested by the user in the field
  (e) Warranty information
(2) Preparation for use
  (a) Sizing/adjustment
  (b) Recommended storage practices
(3) Inspection frequency and details
(4) Donning/doffing
  (a) Donning and doffing procedures
  (b) Sizing and adjustment procedures
  (c) Interface issues
(5) Proper use consistent with NFPA 1500, *Standard on Fire Department Occupational Safety and Health Program*, and 29 CFR 1910.132, "Personal Protective Equipment"
(6) Maintenance and cleaning
  (a) Cleaning instructions and precautions with a statement advising users not to use garments that are not thoroughly cleaned and dried
  (b) Maintenance criteria and methods of repair where applicable
  (c) Decontamination procedures
(7) Retirement and disposal criteria and considerations

5.2 Protective Helmet.

5.2.1 Product Label Requirements.

5.2.1.1 Each helmet shall have a product label or labels permanently and conspicuously attached. At least one product label shall be conspicuously located on or inside each helmet when the helmet is properly assembled with all components in place.

Copyright National Fire Protection Association
Provided by IHS under license with NFPA
No reproduction or networking permitted without license from IHS
Not for Resale

5.2.1.2 Configuration of the product label and attachment of the product label shall not interfere with the legibility of any printed portion of the product label.

5.2.1.3 Multiple label pieces shall be permitted in order to carry all the statements and information required to be on the product label.

5.2.1.4* The certification organization's label, symbol, or identifying mark shall be permanently attached to the product label or shall be part of the product label.

5.2.1.5 All worded portions of the required product label shall be printed at least in English.

5.2.1.6 Symbols and other pictorial graphic representations shall be permitted to be used to supplement or in place of worded statements on the product label(s) where explanations for symbols and pictorial graphic representations are explained in the user information.

5.2.1.7 The following statement shall be printed legibly on the product label, and all letters shall be at least 2.5 mm (3⁄32 in.) high:

"THIS WILDLAND FIRE FIGHTING PROTECTIVE HELMET MEETS THE REQUIREMENTS OF NFPA 1977, STANDARD ON PROTECTIVE CLOTHING AND EQUIPMENT FOR WILDLAND FIRE FIGHTING, 2005 EDITION.

DO NOT REMOVE THIS LABEL."

5.2.1.8 At least the following information shall also be printed legibly on the product label, with all letters at least 2 mm (1⁄16 in.) high:

(1) Manufacturer's name, identification, or designation
(2) Manufacturer's address
(3) Country of manufacture
(4) Manufacturer's helmet identification number, lot number, or serial number
(5) Month and year of manufacture (not coded)
(6) Model or style name, number, or design
(7) Helmet size or size range
(8) Nominal weight of helmet
(9) Cleaning precautions

5.2.2 User Information.

5.2.2.1 The helmet manufacturer shall provide at least the user information that is specified in 5.2.2.5 with each helmet.

5.2.2.2 The helmet manufacturer shall attach the required user information or packaging containing the user information to the helmet in such a manner that it is not possible to use the helmet without being aware of the availability of the information.

5.2.2.3 The required user information or packaging containing the user information shall be attached to the helmet so that a deliberate action is necessary to remove it. The helmet manufacturer shall provide notice that the user information is to be removed ONLY by the end user.

5.2.2.4 Symbols and other pictorial graphic representations shall be permitted to be used to supplement or in place of worded statements where explanations for symbols and pictorial graphic representations are explained in the user information.

5.2.2.5 The helmet manufacturer shall provide at least the following instructions and information with each helmet:

(1) Pre-use information
  (a) Safety considerations
  (b) Limitations of use
  (c) Helmet marking recommendations and restrictions
  (d) A statement that most performance properties of the helmet cannot be tested by the user in the field
  (e) Warranty information
(2) Preparation for use
  (a) Sizing/adjustment
  (b) Recommended storage practices
(3) Inspection frequency and details
(4) Donning/doffing
  (a) Donning and doffing procedures
  (b) Sizing and adjustment procedures
  (c) Interface issues
(5) Proper use consistent with NFPA 1500, *Standard on Fire Department Occupational Safety and Health Program*, and 29 CFR 1910.132, "Personal Protective Equipment"
(6) Maintenance and cleaning
  (a) Cleaning instructions and precautions with a statement advising users not to use helmets that are not thoroughly cleaned and dried
  (b) Maintenance criteria and methods of repair where applicable
  (c) Decontamination procedures
(7) Retirement and disposal criteria and considerations

5.3 Protective Gloves.

5.3.1 Product Label Requirements.

5.3.1.1 Each glove shall have a product label or labels permanently and conspicuously attached. At least one product label shall be conspicuously located on or inside each glove when the glove is properly assembled with all components in place.

5.3.1.2 Configuration of the product label and attachment of the product label shall not interfere with the legibility of any printed portion of the product label.

5.3.1.3 Multiple label pieces shall be permitted in order to carry all the statements and information required to be on the product label.

5.3.1.4* The certification organization's label, symbol, or identifying mark shall be permanently attached to the product label or shall be part of the product label.

5.3.1.5 All worded portions of the required product label shall be printed at least in English.

5.3.1.6 Symbols and other pictorial graphic representations shall be permitted to be used to supplement or in place of worded statements on the product label(s) where explanations for symbols and pictorial graphic representations are explained in the user information.

5.3.1.7 The following statement shall be printed legibly on the product label, and all letters shall be at least 2.5 mm (3⁄32 in.) high:

"THIS WILDLAND FIRE FIGHTING PROTECTIVE GLOVE MEETS THE REQUIREMENTS OF NFPA 1977, STANDARD ON PROTECTIVE CLOTHING AND EQUIPMENT FOR WILDLAND FIRE FIGHTING, 2005 EDITION.

DO NOT REMOVE THIS LABEL."

Copyright National Fire Protection Association
Provided by IHS under license with NFPA
No reproduction or networking permitted without license from IHS
Not for Resale

5.3.1.8 At least the following information shall also be printed legibly on the product label, with all letters at least 2 mm (1/16 in.) high:

(1) Manufacturer's name, identification, or designation
(2) Manufacturer's address
(3) Country of manufacture
(4) Manufacturer's glove identification number, lot number, or serial number
(5) Month and year of manufacture (not coded)
(6) Model or style name, number, or design
(7) Glove size or size range
(8) Cleaning precautions

5.3.2 User Information.

5.3.2.1 The glove manufacturer shall provide at least the user information that is specified in 5.3.2.5 with each glove.

5.3.2.2 The glove manufacturer shall attach the required user information or packaging containing the user information to the glove pair in such a manner that it is not possible to use the gloves without being aware of the availability of the information.

5.3.2.3 The required user information or packaging containing the user information shall be attached to the glove pair so that a deliberate action is necessary to remove it. The glove manufacturer shall provide notice that the user information is to be removed ONLY by the end user.

5.3.2.4 Symbols and other pictorial graphic representations shall be permitted to be used to supplement or in place of worded statements where explanations for symbols and pictorial graphic representations are explained in the user information.

5.3.2.5 The glove manufacturer shall provide at least the following instructions and information with each glove:

(1) Pre-use information
  (a) Safety considerations
  (b) Limitations of use
  (c) Glove marking recommendations and restrictions
  (d) A statement that most performance properties of the glove cannot be tested by the user in the field
  (e) Warranty information
(2) Preparation for use
  (a) Sizing/adjustment
  (b) Recommended storage practices
(3) Inspection frequency and details
(4) Donning/doffing
  (a) Donning and doffing procedures
  (b) Sizing and adjustment procedures
  (c) Interface issues
(5) Proper use consistent with NFPA 1500, *Standard on Fire Department Occupational Safety and Health Program*, and 29 CFR 1910.132, "Personal Protective Equipment"
(6) Maintenance and cleaning
  (a) Cleaning instructions and precautions with a statement advising users not to use gloves that are not thoroughly cleaned and dried
  (b) Maintenance criteria and methods of repair where applicable
  (c) Decontamination procedures
  (d) Instructions for frequency and method of user testing for water resistance
(7) Retirement and disposal criteria and considerations

5.3.2.6 The manufacturer shall make available to prospective purchasers and the purchaser a chart illustrating the hand dimension ranges specified in 6.3.4.4.

5.4 Protective Footwear.

5.4.1 Product Label Requirements.

5.4.1.1 Each footwear pair shall have a product label or labels permanently and conspicuously attached to each boot half pair. At least one product label shall be conspicuously located on or inside each boot when the boot is properly assembled with all components in place.

5.4.1.2 Configuration of the product label and attachment of the product label shall not interfere with the legibility of any printed portion of the product label.

5.4.1.3 Multiple label pieces shall be permitted in order to carry all the statements and information required to be on the product label.

5.4.1.4* The certification organization's label, symbol, or identifying mark shall be permanently attached to the product label or shall be part of the product label.

5.4.1.5 All worded portions of the required product label shall be printed at least in English.

5.4.1.6 Symbols and other pictorial graphic representations shall be permitted to be used to supplement or in place of worded statements on the product label(s) where explanations for symbols and pictorial graphic representations are explained in the user information.

5.4.1.7 The following statement shall be printed legibly on the product label, and all letters shall be at least 2.5 mm (3/32 in.) high:

"THIS WILDLAND FIRE FIGHTING PROTECTIVE FOOTWEAR MEETS THE REQUIREMENTS OF NFPA 1977, STANDARD ON PROTECTIVE CLOTHING AND EQUIPMENT FOR WILDLAND FIRE FIGHTING, 2005 EDITION.

DO NOT REMOVE THIS LABEL."

5.4.1.8 At least the following information shall also be printed legibly on the product label, with all letters at least 2 mm (1/16 in.) high:

(1) Manufacturer's name, identification, or designation
(2) Manufacturer's address
(3) Country of manufacture
(4) Manufacturer's footwear identification number, lot number, or serial number
(5) Month and year of manufacture (not coded)
(6) Model or style name, number, or design
(7) Footwear size and width
(8) Cleaning precautions

5.4.2 User Information.

5.4.2.1 The footwear manufacturer shall provide at least the user information that is specified in 5.4.2.5 with each footwear pair.

5.4.2.2 The footwear manufacturer shall attach the required user information or packaging containing the user information to the boot pair in such a manner that it is not possible to use the boots without being aware of the availability of the information.

--`,,,```-`-`,,`,,`,`,,`---

Copyright National Fire Protection Association
Provided by IHS under license with NFPA
No reproduction or networking permitted without license from IHS
Not for Resale

5.4.2.3 The required user information or packaging containing the user information shall be attached to the boot pair so that a deliberate action is necessary to remove it. The footwear manufacturer shall provide notice that the user information is to be removed ONLY by the end user.

5.4.2.4 Symbols and other pictorial graphic representations shall be permitted to be used to supplement or in place of worded statements where explanations for symbols and pictorial graphic representations are explained in the user information.

5.4.2.5 The footwear manufacturer shall provide at least the following instructions and information with each footwear pair:

(1) Pre-use information
   (a) Safety considerations
   (b) Limitations of use
   (c) Boot marking recommendations and restrictions
   (d) A statement that most performance properties of the boots cannot be tested by the user in the field
   (e) Warranty information
(2) Preparation for use
   (a) Sizing/adjustment
   (b) Recommended storage practices
(3) Inspection frequency and details
(4) Donning/doffing
   (a) Donning and doffing procedures
   (b) Sizing and adjustment procedures
   (c) Interface issues
(5) Proper use consistent with NFPA 1500, *Standard on Fire Department Occupational Safety and Health Program*, and 29 CFR 1910.132, "Personal Protective Equipment"
(6) Maintenance and cleaning
   (a) Cleaning instructions and precautions with a statement advising users not to use boots that are not thoroughly cleaned and dried
   (b) Maintenance criteria and methods of repair where applicable
   (c) Decontamination procedures
(7) Retirement and disposal criteria and considerations

5.4.2.6 Manufacturers shall be required to establish and provide, upon request, a size conversion chart for each model or style of protective footwear based on toe length, arch length, and foot width as measured on the Brannock Scientific Foot Measuring Device.

5.5 Protective Face/Neck Shroud.

5.5.1 Product Label Requirements.

5.5.1.1 Each face/neck shroud shall have a product label or labels permanently and conspicuously attached.

5.5.1.2 Configuration of the product label and attachment of the product label shall not interfere with the legibility of any printed portion of the product label.

5.5.1.3 Multiple label pieces shall be permitted in order to carry all statements and information required to be on the product label.

5.5.1.4* The certification organization's label, symbol, or identifying mark shall be permanently attached to the product label or shall be part of the product label.

5.5.1.5 All worded portions of the required product label shall be printed at least in English.

5.5.1.6 Symbols and other pictorial graphic representations shall be permitted to be used to supplement or in place of worded statements on the product label(s) where explanations for symbols and pictorial graphic representations are explained in the user information.

5.5.1.7 The following statement shall be printed legibly on the product label, and all letters shall be at least 2.5 mm (3⁄32 in.) high:

"THIS WILDLAND FIRE FIGHTING PROTECTIVE FACE/NECK SHROUD MEETS THE REQUIREMENTS OF NFPA 1977, STANDARD ON PROTECTIVE CLOTHING AND EQUIPMENT FOR WILDLAND FIRE FIGHTING, 2005 EDITION.

DO NOT REMOVE THIS LABEL."

5.5.1.8 At least the following information shall also be printed legibly on the product label, with all letters at least 2 mm (1⁄16 in.) high:

(1) Manufacturer's name
(2) Manufacturer's address
(3) Manufacturer's number, lot, or serial number
(4) Date of manufacture (not coded)
(5) Identification of the compliant helmet or helmets with which the face/neck shroud was certified

5.5.2 User Information.

5.5.2.1 The face/neck shroud manufacturer shall provide at least the user information that is specified in 5.5.2.5 with each shroud.

5.5.2.2 The shroud manufacturer shall attach the required user information or packaging containing the user information to the shroud in such a manner that it is not possible to use the shroud without being aware of the availability of the information.

5.5.2.3 The required user information or packaging containing the user information shall be attached to the shroud so that a deliberate action is necessary to remove it. The garment manufacturer shall provide notice that the user information is to be removed ONLY by the end user.

5.5.2.4 Symbols and other pictorial graphic representations shall be permitted to be used to supplement or in place of worded statements user information where explanations for symbols and pictorial graphic representations are explained in the user information.

5.5.2.5 The face/neck shroud manufacturer shall provide at least the following instructions and information with each face/neck shroud.

(1) Pre-use information
   (a) Safety considerations
   (b) Limitations of use
   (c) Shroud marking recommendations and restrictions
   (d) A statement that most performance properties of the shroud cannot be tested by the user in the field
   (e) Warranty information
(2) Preparation for use
   (a) Sizing/adjustment
   (b) Recommended storage practices

Copyright National Fire Protection Association
Provided by IHS under license with NFPA
No reproduction or networking permitted without license from IHS
Not for Resale

(3) Inspection frequency and details
(4) Donning/doffing
  (a) Donning and doffing procedures
  (b) Sizing and adjustment procedures
  (c) Interface issues
(5) Proper use consistent with NFPA 1500, *Standard on Fire Department Occupational Safety and Health Program*, and 29 CFR 1910.132, "Personal Protective Equipment"
(6) Maintenance and cleaning
  (a) Cleaning instructions and precautions with a statement advising users not to use shrouds that are not thoroughly cleaned and dried
  (b) Maintenance criteria and methods of repair where applicable
  (c) Decontamination procedures
(7) Retirement and disposal criteria and considerations

5.5.2.6 The manufacturer shall identify by manufacturer name and model number the helmet or helmets with which the face/neck shroud has been certified and include instructions in the user information for how the face/neck shroud is worn with each helmet with which the face/neck shroud is certified.

5.6 Protective Goggles.

5.6.1 Product Label Requirements.

5.6.1.1 Each pair of goggles shall have a product label configured and attached to the goggles so that the product label shall not interfere with the legibility of any printed portion of the label.

5.6.1.2 Product labels shall be permitted to be configured as labels attached to the goggles, tags attached to the goggles, and package labels printed on or attached to the package containing the smallest number of goggles from which the user withdraws a pair of goggles for use.

5.6.1.3 Multiple label pieces shall be permitted in order to carry all statements and information required to be on the product label.

5.6.1.4* The certification organization's label, symbol, or identifying mark shall be permanently attached to the product label or shall be part of the product label.

5.6.1.5 All worded portions of the required product labels shall be printed at least in English.

5.6.1.6 Symbols and other pictorial graphic representations shall be permitted to be used to supplement or in place of worded statements on the product label(s) where explanations for symbols and pictorial graphic representations are explained in the user information.

5.6.1.7 The following statement shall be printed legibly on the product label, and all letters shall be at least 2.5 mm (3⁄32 in.) high:

"THIS WILDLAND FIRE FIGHTING PROTECTIVE GOGGLE MEETS THE REQUIREMENTS OF NFPA 1977, STANDARD ON PROTECTIVE CLOTHING AND EQUIPMENT FOR WILDLAND FIRE FIGHTING, 2005 EDITION."

5.6.1.8 At least the following information shall also be printed legibly on the product label, with all letters at least 2 mm (1⁄16 in.) high:

(1) Manufacturer's name, identification, or designation
(2) Manufacturer's address
(3) Date of manufacture (not coded)
(4) Cleaning instructions and precautions

5.6.1.9 In addition to the goggles product label, each goggles lens shall bear the following:

(1) The manufacturer's identifying mark or symbol
(2) The certification organization's label, symbol, or identifying mark
(3) The statement "NFPA 1977, 2005 Ed." in letters at least 2 mm (1⁄16 in.) high

5.6.1.10 All markings on the goggles lens shall be permanent, legible, and placed so that they do not interfere with the vision of the wearer.

5.6.2 User Information.

5.6.2.1 The goggles manufacturer shall provide at least the user information that is specified in 5.6.2.5 with each pair of goggles.

5.6.2.2 The goggles manufacturer shall attach the required user information or packaging containing the user information to the goggles in such a manner that it is not possible to use the goggles without being aware of the availability of the information.

5.6.2.3 The required user information or packaging containing the user information shall be attached to the goggles so that a deliberate action is necessary to remove it. The goggles manufacturer shall provide notice that the user information is to be removed ONLY by the end user.

5.6.2.4 Symbols and other pictorial graphic representations shall be permitted to be used to supplement or in place of worded statements user information where explanations for symbols and pictorial graphic representations are explained in the user information.

5.6.2.5 The goggles manufacturer shall provide at least the following instructions and information with each garment.

(1) Pre-use information
  (a) Safety considerations
  (b) Limitations of use
  (c) Recommendations and restrictions
  (d) Warranty information
  (e) A statement that most performance properties of the goggles cannot be tested by the user in the field
(2) Preparation for use
  (a) Sizing/adjustment
  (b) Recommended storage practices
(3) Inspection frequency and details
(4) Donning/doffing
  (a) Donning and doffing procedures
  (b) Sizing and adjustment procedures
  (c) Helmet/goggles interface issues
(5) Proper use consistent with NFPA 1500, *Standard on Fire Department Occupational Safety and Health Program*, and 29 CFR 1910.132, "Personal Protective Equipment"
(6) Maintenance and cleaning
  (a) Cleaning instructions and precautions
  (b) Care and storage instructions
  (c) Maintenance criteria and methods of repair where applicable
  (d) Decontamination procedures
(7) Retirement and disposal criteria and considerations

--`,,,```-`-`,,`,,`,`,,`---
Copyright National Fire Protection Association
Provided by IHS under license with NFPA
No reproduction or networking permitted without license from IHS
Not for Resale

5.7 Chain Saw Protectors.

5.7.1 Product Label Requirements.

5.7.1.1 Each chain saw protector shall have a product label or labels permanently and conspicuously attached.

5.7.1.2 Configuration of the product label and attachment of the product label shall not interfere with the legibility of any printed portion of the product label.

5.7.1.3 Multiple label pieces shall be permitted in order to carry all statements and information required.

5.7.1.4* The certification organization's label, symbol, or identifying mark shall be permanently attached to the product label or shall be part of the product label.

5.7.1.5 All worded portions of the required product label shall be printed at least in English.

5.7.1.6 Symbols and other pictorial graphic representations shall be permitted to be used to supplement or in place of worded statements on the product label(s) where explanations for symbols and pictorial graphic representations are explained in the user information.

5.7.1.7 The following statement shall be printed legibly on the product label, and all letters shall be at least 2.5 mm (3⁄32 in.) high:

"THIS WILDLAND FIRE FIGHTING CHAIN SAW PROTECTOR MEETS THE REQUIREMENTS OF NFPA 1977, STANDARD ON PROTECTIVE CLOTHING AND EQUIPMENT FOR WILDLAND FIRE FIGHTING, 2005 EDITION.

DO NOT REMOVE THIS LABEL."

5.7.1.8 At least the following information shall also be printed legibly on the product label, with all letters at least 2 mm (1⁄16 in.) high:

(1) Manufacturer's name, identification, or designation
(2) Manufacturer's address
(3) Country of manufacture
(4) Manufacturer's lot number, or serial number
(5) Month and year of manufacture (not coded)
(6) Model or style name, number, or design
(7) Size
(8) Cleaning precautions

5.7.2 User Information.

5.7.2.1 The chain saw protector manufacturer shall provide at least the user information that is specified in 5.7.2.5 with each chain saw protector.

5.7.2.2 The chain saw protector manufacturer shall attach the required user information or packaging containing the user information to the chain saw protector in such a manner that it is not possible to use it without being aware of the availability of the information.

5.7.2.3 The required user information or packaging containing the user information shall be attached to the chain saw protector so that a deliberate action is necessary to remove it. The chain saw protector manufacturer shall provide notice that the user information is to be removed ONLY by the end user.

5.7.2.4 Symbols and other pictorial graphic representations shall be permitted to be used to supplement or in place of worded statements where explanations for symbols and pictorial graphic representations are explained in the user information.

5.7.2.5 The chain saw protector manufacturer shall provide at least the following instructions and information with each pair of chain saw protectors.

(1) Pre-use information
  (a) Safety considerations
  (b) Limitations of use
  (c) A statement that most performance properties of the chain saw protective device cannot be tested by the user in the field
  (d) Warranty information
(2) Preparation for use
  (a) Sizing/adjustment
  (b) Recommended storage practices
(3) Inspection frequency and details
(4) Donning/doffing
  (a) Donning and doffing procedures
  (b) Sizing and adjustment procedures
  (c) Interface issues
  (d) Maintenance and cleaning
  (e) Cleaning instructions and precautions
(5) Retirement and disposal criteria and considerations

5.8 Load Carrying Protective Equipment.

5.8.1 Product Label Requirements.

5.8.1.1 The load carrying assembly and each detachable load carrying item shall have a product label or labels permanently and conspicuously attached.

5.8.1.2 Configuration of the product label and attachment of the product label shall not interfere with the legibility of any printed portion of the product label.

5.8.1.3 Multiple label pieces shall be permitted in order to carry all statements and information required.

5.8.1.4* The certification organization's label, symbol, or identifying mark shall be permanently attached to the product label or shall be part of the product label.

5.8.1.5 All worded portions of the required product label shall be printed at least in English.

5.8.1.6 Symbols and other pictorial graphic representations shall be permitted to be used to supplement or in place of worded statements on the product label(s) where explanations for symbols and pictorial graphic representations are explained in the user information.

5.8.1.7 The following statement shall be printed legibly on the product label, and all letters shall be at least 2.5 mm (3⁄32 in.) high:

"THIS WILDLAND FIRE FIGHTING LOAD CARRYING EQUIPMENT MEETS THE REQUIREMENTS OF NFPA 1977, STANDARD ON PROTECTIVE CLOTHING AND EQUIPMENT FOR WILDLAND FIRE FIGHTING, 2005 EDITION.

DO NOT REMOVE THIS LABEL."

Copyright National Fire Protection Association
Provided by IHS under license with NFPA
No reproduction or networking permitted without license from IHS
Not for Resale

5.8.1.8 At least the following information shall also be printed legibly on the product label, with all letters at least 2 mm (1/16 in.) high:

(1) Manufacturer's name, identification, or designation
(2) Manufacturer's address
(3) Country of manufacture
(4) Manufacturer's identification number, lot number, or serial number
(5) Month and year of manufacture (not coded)
(6) Model or style name, number, or design
(7) Size
(8) Cleaning precautions

5.8.2 User Information.

5.8.2.1 The load carrying equipment manufacturer shall provide at least the user information that is specified in 5.8.2.5 with each load carrying equipment item.

5.8.2.2 The load carrying equipment manufacturer shall attach the required user information or packaging containing the user information to the load carrying equipment in such a manner that it is not possible to use the load carrying equipment without being aware of the availability of the information.

5.8.2.3 The required user information or packaging containing the user information shall be attached to the load carrying equipment so that a deliberate action is necessary to remove it. The load carrying equipment manufacturer shall provide notice that the user information is to be removed ONLY by the end user.

5.8.2.4 Symbols and other pictorial graphic representations shall be permitted to be used to supplement or in place of worded statements user information where explanations for symbols and pictorial graphic representations are explained in the user information.

5.8.2.5 The load carrying equipment manufacturer shall provide at least the following instructions and information with each item:

(1) Pre-use information
  (a) Safety considerations
  (b) Limitations of use
  (c) Recommendations and restrictions
  (d) Warranty information
(2) Preparation for use
  (a) Sizing/adjustment
  (b) Recommended storage practices
(3) Inspection frequency and details
(4) Donning/doffing
  (a) Donning and doffing procedures
  (b) Sizing and adjustment procedures
  (c) Interface issues
(5) Proper use consistent with NFPA 1500, *Standard on Fire Department Occupational Safety and Health Program*, and 29 CFR 1910.132, "Personal Protective Equipment"
(6) Maintenance and cleaning
  (a) Cleaning instructions and precautions
  (b) Maintenance criteria and methods of repair where applicable
  (c) Decontamination procedures
(7) Retirement and disposal criteria and considerations

Chapter 6 Design Requirements

6.1 Protective Garment Item Design Requirements.

6.1.1 Garment items shall have at least the applicable design requirements specified in this section where inspected by the certification organization as specified in Section 4.3.

6.1.2 All collars on jackets, shirts, and one-piece garments shall remain upright after extension into a vertical position.

6.1.3 Jackets, shirts, and one-piece garments shall not have turn-up cuffs. Sleeve cuffs shall have a closure system that can be adjusted to provide a snug and secure fit around the wrist while wearing a glove that is compliant with the glove requirements of this standard.

6.1.4 Where provided, all pockets that open to the exterior of garments, other than front waist pockets, shall have a cover or closure system.

6.1.5 Any pass-through openings in garments shall have a means of fastening them in a closed position.

6.1.6 Bottoms of upper torso garments, other than cold weather outerwear, shall be designed so that the bottom edge conforms to the respective front and back lengths specified in Table 6.1.17.3(a). No portion of the bottom garment edge shall be less than the respective minimum front and back length measurement. This requirement shall not apply to cold weather outerwear.

6.1.6.1 With an upper torso garment, other than cold weather outerwear, prepared as specified in 6.1.17.7, a line shall be formed between the two lowest points on the garment bottom edge. Minimum front and back lengths shall extend to that line as a minimum.

6.1.7 All snaps shall meet the requirements of MS 27980F, *Fasteners, Snap, Style 2, of Fasteners, Snap*, MIL-F-10884G.

6.1.8 Fastener tape shall meet the requirements of A-A-55126, *Fastener Tapes, Hook and Pile, Synthetic.*

6.1.9 Zippers shall meet the requirements of V-F-106F, *Fasteners, Slide, Interlocking.*

6.1.10 All thread used to manufacture garments shall be made of inherently flame-resistant fiber.

6.1.11 All garments that encompass the neck area shall have a closure system at the neckline.

6.1.12 All closure systems shall not come into direct contact with the body.

6.1.13 Hardware of any garment shall not come into direct contact with the wearer's body.

6.1.14 All garment hardware finish shall be free of rough spots, burrs, or sharp edges.

6.1.15 One-piece garment torso closure systems shall extend from the top of crotch area to top of garment at the neck.

6.1.16 Where trim and retroreflective materials other than trim are used on garments, the trim or other retroreflective materials shall be distributed over the exterior of the garment to provide 360-degree visibility of the wearer.

6.1.17 Size Requirements.

6.1.17.1 The requirements of 6.1.17.3 through 6.1.17.8 shall not apply to cold weather outerwear.

Copyright National Fire Protection Association
Provided by IHS under license with NFPA
No reproduction or networking permitted without license from IHS
Not for Resale

6.1.17.2 Cold weather outerwear shall be provided in a minimum of five distinct sizes ranging from chest size 39 through 59 and sleeve length of 775 mm (30 in.) to 900 mm (35 in.).

6.1.17.3 Manufacturers shall produce garments in accordance with the minimum sizing requirements indicated in Table 6.1.17.3(a), Table 6.1.17.3(b), Table 6.1.17.3(c), and Table 6.1.17.3(d).

Table 6.1.17.3(a) Minimum Sizing Requirements for Protective Upper Torso Garments (in.)

Dimension Measured*	Garment Size						Amount of Change†
	XS	S	M	L	XL	2XL	
Neck size	13–13½	14–14½	15–15½	16–16½	17–17½	18–18½	1
Collar length (A)	14¾	15¾	16¾	17¾	18¾	19¾	1
Collar width (B)	3	3	3	3	3	3	0
Front length (C)	26	27	28	29	30	31	1
Back length (D)	28	29	30	31	32	33	1
Sleeve length (E)	30½	31½	32½	33½	34½	35½	1
Cuff (F)	12½	13	13½	14	14½	15	½
Chest (G)	39	43	47	51	55	59	4
Waist (H)	33	37	41	45	49	53	4
Bottom (I)	39	43	47	51	55	59	4

Note: To convert measurements to millimeters, multiply by 25.
*Letters in parentheses refer to Figure 6.1.17.7(a).
†The amount of change between two consecutive garment sizes for the dimension measured.

Table 6.1.17.3(b) Minimum Sizing Requirements for Men's Lower Torso Protective Garments (in.)

Dimension Measured*	Garment Size								Amount of Change†
	26	28	30	32	34	36	38	40	
Waist (A)	26	28	30	32	34	36	38	40	2
Seat (B)	37	39	41	43	45	47	49	51	2
Thigh (C)	25	26	27	28	29	30	31	32	1
Knee (D)	17½	18¼	19	19¾	20½	21¼	22	22¾	¾
Cuff (E)	17	18	18½	19	19½	20	20½	21	½
Front rise (F)	11⅛	11 7/16	11¾	12 1/16	12⅜	12 11/16	13	13¼	5/16
Back rise (G)	16⅝	16 15/16	17¼	17 9/16	17⅞	18 3/16	18½	18 13/16	5/16
Inseam (H)	Cut to order or provided in 1 in. increments between 28 and 36 in.								

Note: To convert measurements to millimeters, multiply by 25.
*Letters in parentheses refer to Figure 6.1.17.7(b).
†The amount of change between two consecutive garment sizes for the dimension measured.

Table 6.1.17.3(c) Minimum Sizing Requirements for Women's Lower Torso Protective Garments (in.)

Dimension Measured*	Garment Size								Amount of Change†
	23	25	27	29	31	33	35	37	
Waist (A)	23	25	27	29	31	33	35	37	2
Seat (B)	37	39	41	43	45	47	49	51	2
Thigh (C)	25	26	27	28	29	30	31	32	1
Knee (D)	17½	18¼	19	19¾	20½	21¼	22	22¾	¾
Bottom (E)	17½	18	18½	19	19½	20	20½	21	½
Front rise (F)	11⅛	11 7/16	11¾	12 1/16	12⅜	12 11/16	13	13 5/16	5/16
Back (G)	16 11/16	17	17 5/16	17⅝	17 15/16	18¼	18 9/16	18⅞	5/16
Inseam (H)	Cut to order or provided in 1 in. increments between 28 and 36 in.								

Note: To convert measurements to millimeters, multiply by 25.
*Letters in parentheses refer to Figure 6.1.17.7(b).
†The amount of change between two consecutive garment sizes for the dimension measured.

Copyright National Fire Protection Association
Provided by IHS under license with NFPA
No reproduction or networking permitted without license from IHS
Not for Resale

Table 6.1.17.3(d) Minimum Sizing Requirements for Protective One-Piece Garments (in.)

Dimension Measured*	Garment Size					Amount of Change†
	XS	S	M	L	XL	
Neck size (A)	7	7½	8	8½	9	½
Collar length (B)	14¾	15¾	16¾	17¾	18¾	1
Collar width (C)	3	3	3	3	3	0
Sleeve length (D)	30½	31½	32½	33½	34½	1
Cuff, sleeve (E)	12½	13	13½	14	14½	½
Chest (F)	32	36	40	44	48	4
Seat (G)	37	41	45	49	53	4
Thigh (H)	25	27	29	31	33	2
Knee (I)	17½	19	20½	22	23½	1½
Bottom (J)	17½	18½	19½	20½	21½	1
Vertical circumference (K)						
S (short size)	—	—	69	71½	74	—
R (regular size)	63½	63½	71	73½	76	—
T (tall size)	65½	65½	73	75½	78	—
Height range						
S (short size)	—	—	64–67	—	—	—
R (regular size)	63–66	—	67½–72	—	—	—
T (tall size)	66½–69	—	72½–75	—	—	—

Note: To convert measurements to millimeters, multiply by 25.
*Letters in parentheses refer to Figure 6.1.17.7(c).
†The amount of change between two consecutive garment sizes for the dimension measured.

6.1.17.4 Size requirements for tall sizes for upper torso measurements as specified in Table 6.1.17.3(a) and Table 6.1.17.3(d) shall have an additional 25 mm (1 in.) added to the sleeve length dimension and an additional 38 mm (1½ in.) added to the front and back length dimensions.

6.1.17.5 Garments shall be permitted for sizes midway between those specified, provided that they meet dimensional requirements that are midway between the respective values for corresponding even sizes specified in Table 6.1.17.3(a), Table 6.1.17.3(b), Table 6.1.17.3(c), and Table 6.1.17.3(d).

6.1.17.6 Garments shall be permitted to be custom made, provided that the individual is measured for all dimensions cited in the sizing tables and that the garment provides the minimum ease specified in Table 6.1.17.6.

6.1.17.7 Garments shall be closed, laid flat, smoothed, and gently stretched when measured as defined in Section 3.3 and as specified in Section 6.1 and in Figure 6.1.17.7(a), Figure 6.1.17.7(b), and Figure 6.1.17.7(c).

6.1.17.8 The minimum seam allowance for all major seams shall be at least 10 mm (⅜ in.), and all minor seams shall be at least 6 mm (¼ in.).

6.2 Protective Helmet Item Design Requirements.

6.2.1 Helmet items shall have at least the applicable design requirements specified in this section where inspected by the certification organization as specified in Section 4.3.

6.2.2 Helmets shall meet as a minimum the requirements for Type 1, Class G helmets as specified in ANSI Z89.1, *Protective Headwear for Industrial Workers*.

6.2.3 Helmets shall be designed to consist of at least a shell with a brim or peak, a means of absorbing energy, suspension system with sweatband, chin strap, nape device, goggle clips, and retroreflective markings.

6.2.3.1 The brim shall be an integral part of the helmet shell that extends outward around the entire circumference of the shell.

6.2.3.2 The peak shall be the part of the helmet shell and shall extend forward over the forehead.

6.2.4 Provisions shall be made for ventilation between the head and the helmet shell.

6.2.5 All materials used in the helmet construction that are designed to come in contact with the wearer's head or skin shall be known to be nonirritating to normal skin.

6.2.6 The helmet complete with energy-absorbing system, suspension system with sweatband, chin strap, nape device, goggle clips, and retroreflective markings shall not weigh more than 570 g (20 oz).

6.2.7 The area under the peak or the front of the brim shall be permitted to be covered only with a nonconducting, nonflammable, antiglare material.

6.2.8 Clips for headlamps or goggles shall be permanently attached with at least one clip at the rear of the helmet and one clip on each side of the helmet. Clips shall be suitably located to retain straps and shall not be attached more than 55 mm (2³⁄₁₆ in.) above the lowest point of the helmet dome, excluding the brim.

6.2.9 Suspension shall contain a nape device that shall be removable and replaceable.

6.2.9.1 The suspension shall be adjustable in ⅛ hat size or smaller increments.

Copyright National Fire Protection Association
Provided by IHS under license with NFPA
No reproduction or networking permitted without license from IHS
Not for Resale

Table 6.1.17.6 Ease

Dimension	Amount of Ease (in.) Men's Garments	Women's Garments
Upper torso garment		
Neck circumference	+1	+1
Chest circumference	+6	+6
Hip circumference	+6	+6
Bottom circumference	+6	+6
Cuff circumference	+6	+6
Amount of front and back length extending below top of hip line	+6	+6
Lower torso garment		
Waist circumference	+1	+1
Seat circumference	+6	+7
Thigh circumference	+6	+6
Knee circumference	+6	+6
Bottom circumference	+11	+11
Rise (front and back)	+6	+11
One-piece garment		
Neck circumference	+1	+1
Chest circumference	+6	+6
Cuff circumference	+6	+6
Seat circumference	+6	+7
Thigh circumference	+6	+6
Knee circumference	+6	+6
Bottom circumference	+11	+11
Vertical circumference	+10	+10

Note: To convert measurements to millimeters, multiply by 25.

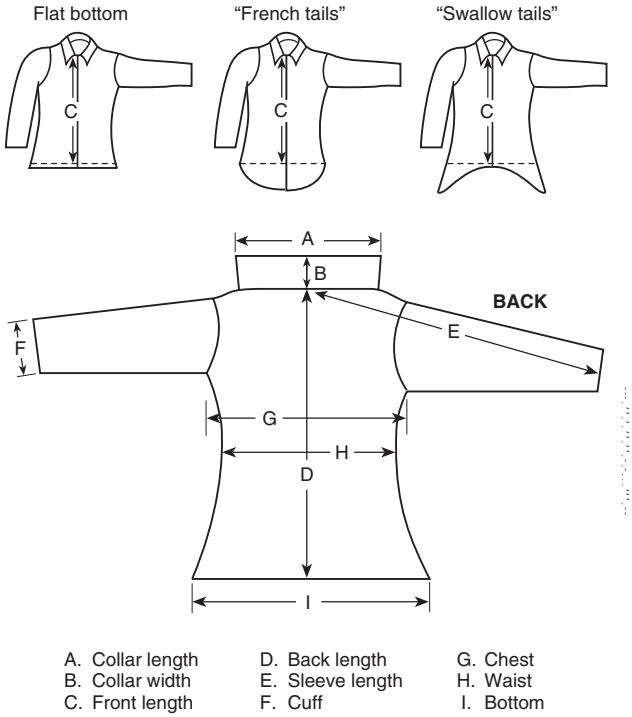

FIGURE 6.1.17.7(a) Upper Torso Measurements [to be used with Table 6.1.17.3(a)].

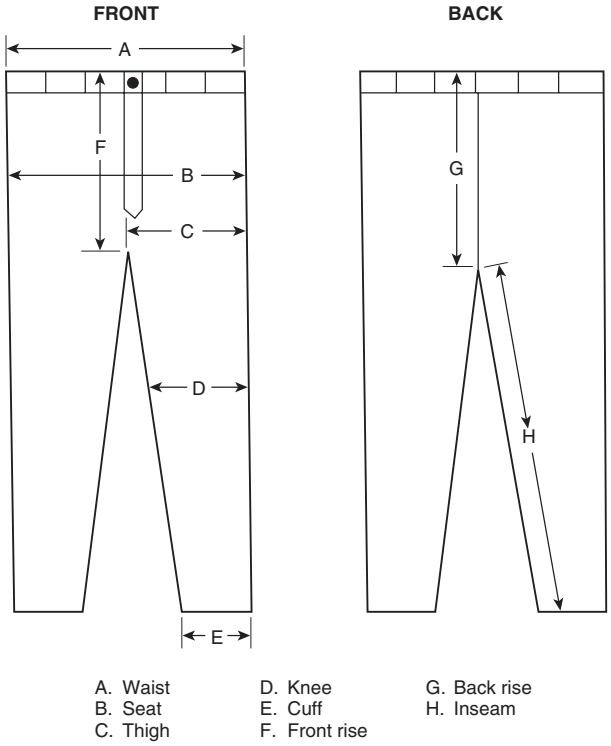

FIGURE 6.1.17.7(b) Lower Torso Measurements [to be used with Table 6.1.17.3(b) and Table 6.1.17.3(c)].

6.2.9.2 There shall be sufficient clearance between the shell and the suspension to provide ventilation with the suspension adjusted to the maximum designated size.

6.2.10 A sweatband shall be provided that shall cover at least the forehead portion of the suspension system. Sweatbands shall be either removable and replaceable or shall be integral with the suspension.

6.2.11 The helmet shall be designed so that the distance between the top of the head and the underside of the shell cannot be adjusted to less clearance than the manufacturer's requirements for that specific helmet.

6.2.12 Chin straps shall be provided that attach to the helmet. Both chin and nape straps shall not be less than 13 mm (½ in.) in width.

6.2.13 All thread used to manufacture helmets shall be made of inherently flame-resistant fiber.

6.2.14 Helmets shall not have any metal hardware permanently mounted to the outer surface of the helmet shell.

6.2.15 All helmets shall have retroreflective markings on the exterior of the shell.

6.2.15.1 A minimum of 2580 mm^2 (4 $in.^2$) of retroreflective markings shall be visible when the helmet is viewed from the sides, front, and rear.

Copyright National Fire Protection Association
Provided by IHS under license with NFPA
No reproduction or networking permitted without license from IHS
Not for Resale

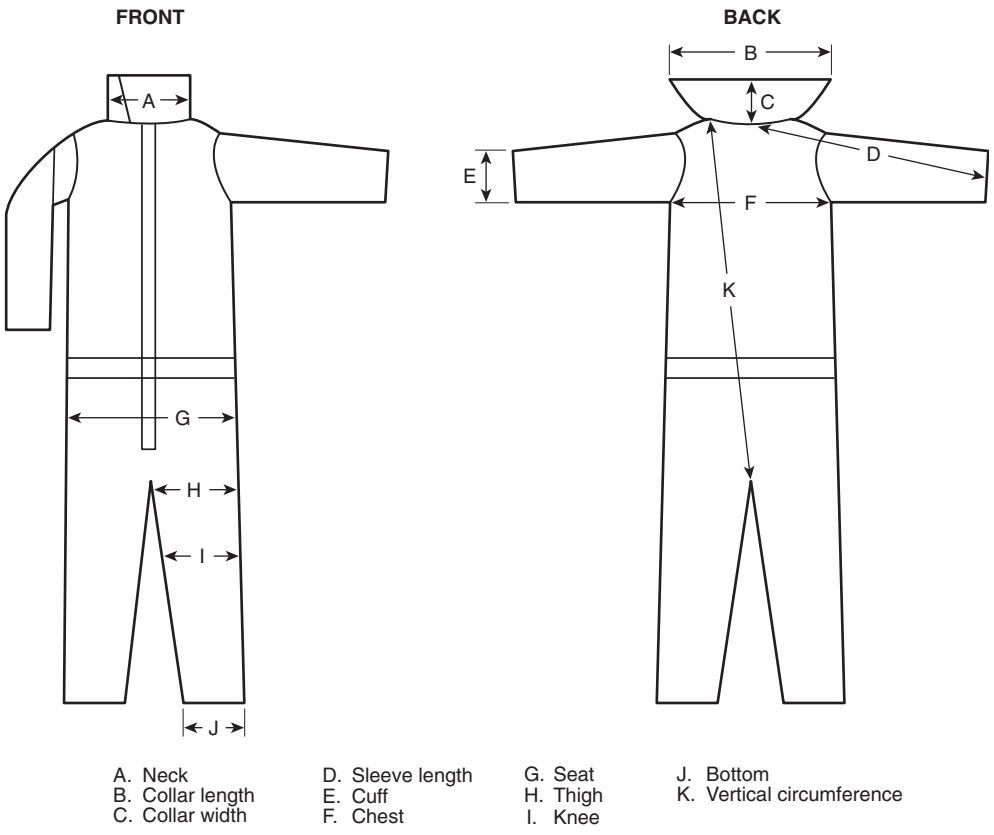

FIGURE 6.1.17.7(c) One-Piece Garment Torso Measurements [to be used with Table 6.1.17.3(d)].

6.2.15.2 The retroreflective markings shall be placed above the goggle or headlamp clips so as not to be obscured by any clip or by the strap retained by the clips.

6.3 Protective Glove Item Design Requirements.

6.3.1 Glove items shall have at least the applicable design requirements specified in this section where inspected by the certification organization as specified in Section 4.3.

6.3.2 Glove bodies shall be designed such that they closely conform to the wrist or are adjustable at the wrist and shall extend a minimum of 25 mm (1 in.) past the wrist crease. The location of the wrist crease shall be as shown in Figure 6.3.2.

6.3.3 All thread used to manufacture gloves shall be made of inherently flame-resistant fiber.

6.3.4 Sizing.

6.3.4.1 In order to label or otherwise indicate that a glove complies with the requirements of this standard, the manufacturer shall provide gloves in not less than five separate and distinct sizes.

6.3.4.2 The manufacturer shall provide the purchaser with the hand dimension ranges specified in 6.3.4.4.

6.3.4.3 Custom-sized gloves outside the ranges specified in this section shall be permitted in addition to the required five sizes.

6.3.4.4 The glove size indicated on the product label shall be determined by the hand dimensions given in Table 6.3.4.4.

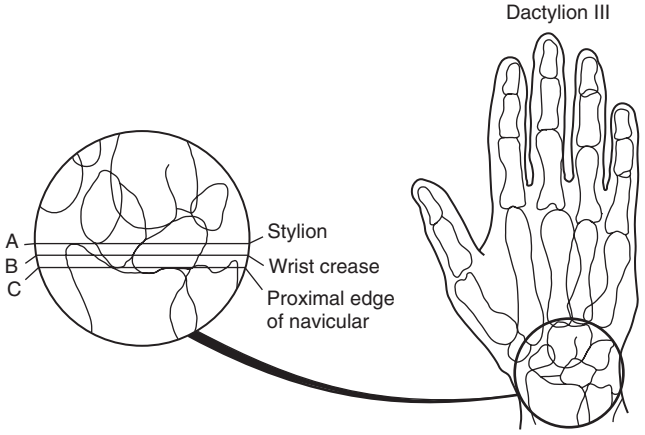

FIGURE 6.3.2 Anatomical Landmarks at Base of Hand.

6.4 Protective Footwear Item Design Requirements.

6.4.1 Footwear items shall have at least the applicable design requirements specified in this section where inspected by the certification organization as specified in Section 4.3.

6.4.2 Footwear items shall consist of a sole with heel, upper, insole, and shank. The quarter section of the boot shall be designed to provide an adjustable, snug fit for support around the ankle and lower leg.

Copyright National Fire Protection Association
Provided by IHS under license with NFPA
No reproduction or networking permitted without license from IHS
Not for Resale

Table 6.3.4.4 Ranges of Hand Dimensions to be Accommodated by Glove Sizes

	Hand Length		Hand Circumference	
Size	**mm**	**(in.)**	**mm**	**(in.)**
Extra small (XS)	165–175	(6.40–6.79)	165–205	(6.40–7.97)
Small (S)	175–185	(6.79–7.19)	175–215	(6.79–8.37)
Medium (M)	185–195	(7.19–7.58)	185–225	(7.19–8.76)
Large (L)	195–205	(7.58–7.97)	195–235	(7.58–9.15)
Extra large (XL)	205–215	(7.97–8.37)	205–245	(7.97–9.55)

6.4.3 The heel breast shall not be less than 13 mm (½ in.). The heel breasting angle shall not be less than 90 degrees nor more than 135 degrees relative to the sole and as shown in Figure 6.4.3.

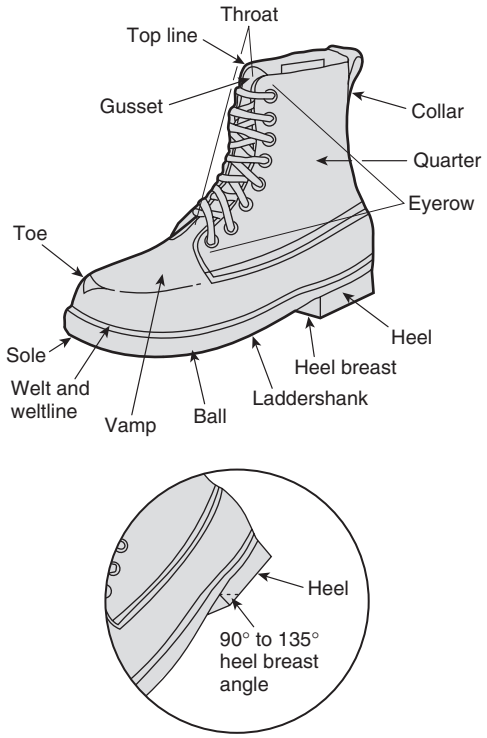

FIGURE 6.4.3 Footwear Terms.

6.4.4 Footwear height shall be a minimum of 200 mm (8 in.).

6.4.4.1 The height shall be determined by measuring inside the boot from the center of the insole at the heel up to a perpendicular reference line extending across the width of the boot at the lowest point of the top line.

6.4.4.2 Removable insole inserts shall not be removed prior to measurement.

6.4.5 Metal parts shall not penetrate from the outside into the inside at any point, unless covered.

6.4.6 Where used, there shall be a minimum of four metal stud hooks on each side of the eyerow, and they shall meet the requirements of 7.4.2 and 7.4.8.

6.4.7 Eyelets shall be constructed of coated steel, solid brass, brass-coated nickel, or nickel.

6.4.8 All thread used to manufacture footwear shall be made of inherently flame-resistant fiber.

6.4.9 Sizing.

6.4.9.1 Protective footwear shall be available in all of the following sizes:

(1) Men's: 7–13, including half sizes and a minimum of three widths
(2) Women's: 5–10, including half sizes and a minimum of three widths

6.4.9.2 Manufacturers shall be required to establish and provide, upon request, a size conversion chart for each model or style of protective footwear based on toe length, arch length, and foot width as measured on the Brannock Foot Measuring Device.

6.4.9.3 Full and half sizes in each of the three required widths shall be accomplished by individual and unique lasts to provide proper fit.

6.5 Protective Face/Neck Shroud Item Design Requirements.

6.5.1 Face/neck shroud items shall have at least the applicable design requirements specified in this section where inspected by the certification organization as specified in Section 4.3.

6.5.2 Face/neck shrouds shall be designed to cover and provide limited protection to the face and neck areas, as specified within this section, that do not receive primary protection from the helmet.

6.5.3 The shroud shall be designed to attach to an NFPA 1977–compliant helmet.

6.5.4 Face/neck shrouds shall be measured to determine the areas of coverage.

6.5.4.1 The shroud shall be donned properly on the helmet in the position that it is intended to be worn, as specified by the manufacturer, on a compliant wildland fire fighting helmet as identified in 5.5.1.8(5).

6.5.4.2 The helmet shall be placed on an ISO size J headform.

6.5.4.3 In this position, the shroud shall provide a minimum coverage on each side, measured downward from the reference plane at the coronal plane, of 200 mm (8 in.).

6.5.4.4 The shroud shall provide a minimum coverage in the back, measured downward from the reference plane at the rear midsagittal plane, of 210 mm (8⅜ in.) and shall provide a minimum coverage in the front, measured downward from the reference plane at the front midsagittal plane, of 200 mm (8 in.).

Copyright National Fire Protection Association
Provided by IHS under license with NFPA
No reproduction or networking permitted without license from IHS
Not for Resale

6.5.4.5 The face opening shall not be considered as a gap in coverage.

6.5.5 The shroud shall be designed with a face opening.

6.5.5.1 The shroud face opening shall not exceed 170 mm (6¾ in.) when measured along the reference plane.

6.5.5.2 The bottom of the shroud face opening shall not exceed 40 mm (1½ in.) when measured downward from the reference plane at the front midsagittal plane.

6.5.6 Shrouds shall have a closure system. The closure system shall not come in contact with the face or neck when the shroud is positioned as specified in 6.6.4.

6.5.7 All snaps shall meet the requirements of MS 27980F, *Fasteners, Snap, Style 2, of Fasteners, Snap,* MIL-F-10884G.

6.5.8 Fastener tape shall meet the requirements of A-A-55126, *Fastener Tapes, Hook and Pile, Synthetic.*

6.5.9 Zippers shall meet the requirements of V-F-106F, *Fasteners, Slide, Interlocking.*

6.5.10 All thread used to manufacturer face/neck shrouds or face/neck shroud components shall be made of inherently flame-resistant fiber.

6.6 Protective Goggle Item Design Requirements.

6.6.1 Goggle items shall have at least the applicable design requirements specified in this section where inspected by the certification organization as specified in Section 4.3.

6.6.2 Goggles shall meet the requirements for high impact protection of ANSI Z87.1, *Occupational and Educational Eye and Face Protection.*

6.6.3 Goggles shall be designed to consist of at least a frame, a lens or lenses, and a retention strap or means of attachment to a NFPA 1977–compliant helmet.

6.6.4 All materials in the goggle construction that are designed to come in contact with the wearer's head or skin shall be known to be nonirritating to normal skin.

6.6.5 All hardware shall be free of rough spots, burrs, or sharp edges.

6.6.6 Where positioned on the helmet, the goggles shall not interfere with the function of the helmet or its component parts and shall not degrade the helmet's performance below the requirements of this standard.

6.7 Chain Saw Protector Item Design Requirements.

6.7.1 Chain saw protector items shall have at least the applicable design requirements specified in this section where inspected by the certification organization as specified in Section 4.3.

6.7.2 Chain saw protectors shall be designed as leg protectors.

6.7.3 Chain saw protectors that are designed to protect the legs shall meet the requirements of Sections 4 and 5 of ASTM F 1897, *Standard Specification for Leg Protection for Chain Saw Users.*

6.7.3.1 Chain saw protectors that are designed to protect the legs and that are configured as pants or trousers shall meet the requirements of 5.2.1 of ASTM F 1897, *Standard Specification for Leg Protection for Chain Saw Users.*

6.7.3.2 Chain saw protectors that are designed to protect the legs and that are configured as chaps or leggings shall meet the requirements of 5.2.2 of ASTM F 1897, *Standard Specification for Leg Protection for Chain Saw Users.*

6.7.4 All thread used to manufacture chain saw protectors shall be made of inherently flame-resistant fiber.

6.7.5 All hardware, brackets, and snaps, or other fasteners shall be free of rough spots, burrs, or sharp edges.

6.8 Load Carrying Protective Equipment Item Design Requirements.

6.8.1 Load carrying protective equipment items shall have at least the applicable design requirements specified in this section where inspected by the certification organization as specified in Section 4.3.

6.8.2 The design of the load carrying protective equipment items shall allow the mounting of the fire shelter carrier on the outside as to be readily available to the user and able to be opened with one gloved hand.

6.8.3 The design of the load carrying protective equipment items shall allow the carrying of the fire fighters' personal water supply in the form of canteens, water bottles, or bladders.

6.8.4 All hardware, brackets, and snaps or other fasteners of any accessories shall be free of rough spots, burrs, or sharp edges.

Chapter 7 Performance Requirements

7.1 Protective Garment Item Performance Requirements.

7.1.1 Garment textile fabrics shall be tested for radiant protective performance as specified in Section 8.2, Radiant Protective Performance (RPP) Test, and shall have an average RPP value of not less than 7.

7.1.2 Garment textile fabrics, collar linings, winter liners where provided, trim, lettering, and other materials used in garment construction — including but not limited to labels, linings, padding, reinforcements, bindings, hanger loops, emblems, and patches, but excluding hook and pile fasteners, elastic, and interlinings where not in direct contact with the skin — shall be individually tested for resistance to flame as specified in Section 8.3, Flame Resistance Test, and shall not have a char length of more than 100 mm (4 in.) average, shall not have an afterflame of more than 2 seconds average, and shall not melt or drip.

7.1.2.1 Small specimens such as labels, hanger loops, emblems, and patches that are not large enough to meet the specimen size requirements in 8.3.2.1 shall be tested for resistance to flame as specified in Section 8.3, Flame Resistance Test, and shall not be totally consumed, shall not have an afterflame of more than 2 seconds average, and shall not melt or drip.

7.1.3 Garment textile fabrics and interlinings, winter liners where provided, and collar linings shall be individually tested for resistance to heat as specified in Section 8.4, Heat and Thermal Shrinkage Resistance Test, and shall not shrink more than 10 percent in any direction.

7.1.4 Garment textile fabrics and interlinings, winter liners where provided, trim, lettering, and other materials used in garment construction — including but not limited to padding, reinforcements, labels, wristlets, collars, closures, fasteners, bindings, hanger loops, emblems, and patches, but ex-

Copyright National Fire Protection Association
Provided by IHS under license with NFPA
No reproduction or networking permitted without license from IHS
Not for Resale

cluding hook and pile fasteners and elastic where not in direct contact with the skin — shall be individually tested for resistance to heat as specified in Section 8.4, Heat and Thermal Shrinkage Resistance Test, and shall not melt, drip, separate, or ignite. In addition, garment textile fabrics shall not char.

7.1.5 All garment hardware shall be individually tested for resistance to heat as specified in Section 8.4, Heat and Thermal Shrinkage Resistance Test, and shall not ignite and shall remain functional.

7.1.6 Garment composite, excluding cold weather outerwear garments and excluding winter liners where provided, shall be tested for evaporative heat transfer as specified in Section 8.5, Total Heat Loss Test, and shall have a total heat loss of not less than 450 W/m^2.

7.1.7 Woven garment textile fabrics, collar linings, and winter liners where provided shall be individually tested for resistance to tearing as specified in Section 8.6, Tear Resistance Test, and shall have a tear strength of not less than 22 N (5 lbf).

7.1.7.1 Where garment textile fabrics, collar linings, and cold weather liners are knit materials, these materials shall instead be individually tested for burst strength as specified in Section 8.10, Burst Strength Test, and shall have a burst strength of not less than 225 N (50 lbf).

7.1.8 Garment textile fabrics, winter liners where provided, and collar linings shall be individually tested for resistance to shrinkage as specified in Section 8.7, Cleaning Shrinkage Resistance Test, and shall not shrink more than 5 percent in any direction.

7.1.9 All garment seam assemblies shall be tested for strength as specified in Section 8.8, Seam Breaking Strength Test.

7.1.9.1 Woven garment seam assemblies and seam assemblies that contain at least one woven material shall demonstrate a sewn seam strength equal to or greater than 315 N (70 lbf) force for major seams and 225 N (50 lbf) force for minor seams.

7.1.9.2 All knit garment seam assemblies shall demonstrate a sewn seam strength equal to or greater than 180 N (40 lbf).

7.1.9.3 Where the fabric strength is less than the required seam strength specified in 7.1.9.1, providing the fabric fails without failure of the seam below the applicable forces specified in 7.1.9.1, the seam breaking strength shall be considered acceptable.

7.1.10 All sewing thread utilized in the construction of garments shall be tested for resistance to melting as specified in Section 8.9, Thread Heat Resistance Test, and shall not ignite, melt, or char.

7.1.11 Garment product labels shall be tested for legibility as specified in Section 8.31, Label Durability and Legibility Test 1, and shall not be torn, shall remain in place, and shall be legible to the unaided eye.

7.1.12 Where trim is used on garments, trim shall be tested for retroreflectivity as specified in Section 8.16, Retroreflectivity and Fluorescence Test, and shall have a coefficient of retroreflection (R_A) of not less than 100 cd/lux/m^2 (100 cd/fc/ft^2).

7.1.13 Where trim is used on garments and includes both retroreflective and fluorescent materials, samples of the trim shall be tested for both retroreflectivity and fluorescence as specified in Section 8.16, Retroreflectivity and Fluorescence Test, and shall have a total coefficient of retroreflection (R_A) of not less than 100 cd/lux/m^2 (100 cd/fc/ft^2), and shall be designated as fluorescent.

7.2 Protective Helmet Item Performance Requirements.

7.2.1 All sewing thread utilized in the construction of helmets, excluding that used on the crown straps, shall be tested for resistance to melting as specified in Section 8.9, Thread Heat Resistance Test, and shall not ignite, melt, or char.

7.2.2 Specimen helmets shall be tested for resistance to top impact as specified in Section 8.11, Top Impact Resistance Test (Force) After Radiant Conditioning, and shall have no specimen transmit an average force of more than 3780 N (850 lbf). No individual specimen shall transmit a force of more than 4450 N (1000 lbf). Disengagement of, deformation of, or damage to the helmet shell or component parts shall not in itself constitute failure.

7.2.3 Helmets shall be tested for penetration resistance as specified in Section 8.12, Helmet Physical Penetration Resistance Test After Radiant Conditioning, and the penetration striker shall not make contact with the headform as indicated by the contact indicator.

7.2.4 Antiglare material on helmets, where provided as permitted in 6.2.7, shall be tested for flame resistance as specified in Section 8.13, Helmet Antiglare Flammability Test, and shall not show any visible afterflame time greater than 5 seconds.

7.2.5 Helmets shall be tested for heat resistance as specified in Section 8.4, Heat and Thermal Shrinkage Resistance Test, and shall not have any deformation of the brim or peak exceed 25 percent of its length.

7.2.6 Helmets shall be tested for suspension system separation as specified in Section 8.15, Suspension System Retention Test. The force required to separate any individual attachment point of the suspension assembly from the helmet shell and each adjusting mechanism of the suspension system assembly shall not be less than 22 N (5 lbf). There shall not be any failure of any adjusting mechanism to function properly.

7.2.7 Helmet trim shall be tested for retroreflectivity as specified in Section 8.16, Retroreflectivity and Fluorescence Test, and shall have a coefficient of retroreflection (R_A) of not less than 100 cd/lux/m^2 (100 cd/fc/ft^2).

7.2.8 Helmet chin straps shall be tested for retention system separation as specified in Section 8.17, Retention System Test, and shall have no failure of any mechanism to function properly, and the chin strap shall not exhibit any breakage and shall not stretch or slip more than 38 mm (1½ in.).

7.2.9 Helmets with goggle or headlamp clips shall be tested for attachment strength as specified in Section 8.19, Goggle and Headlamp Clip Attachment Test, and shall not release from the shell and shall not deflect more than 6 mm (¼ in.) from their original position.

7.2.10 Helmet product labels shall be tested for legibility as specified in Section 8.32, Label Durability and Legibility Test 2, and shall not be torn, shall remain in place, and shall be legible to the unaided eye.

7.3 Protective Glove Item Performance Requirements.

7.3.1 Gloves shall be tested for heat resistance as specified in Section 8.4, Heat and Thermal Shrinkage Resistance Test, and

Copyright National Fire Protection Association
Provided by IHS under license with NFPA
No reproduction or networking permitted without license from IHS
Not for Resale

shall not separate, melt, ignite, or drip, shall not shrink more than 10 percent in either direction after testing, shall be donnable, and shall be flexible.

7.3.2 Gloves shall be tested for flame resistance as specified in Section 8.20, Protective Glove Flame Resistance Test, and shall not melt or drip, shall not have any afterflame of more than 2 seconds, shall not have any char length in excess of 100 mm (4 in.), and the consumed materials shall not exceed 50 percent of the specimen's original weight.

7.3.3 Gloves shall be tested for resistance to conductive heat as specified in Section 8.21, Conductive Heat Resistance Test, and shall have a second-degree burn time of not less than 7 seconds, and the pain time shall not be less than 4 seconds.

7.3.4 Gloves shall be tested for thermal protective performance (TPP) as specified in Section 8.22, Thermal Protective Performance Test, and shall have an average TPP of not less than 20.

7.3.5 Gloves shall be tested for resistance to cutting as specified in Section 8.23, Cut Resistance Test, and shall have a distance of blade travel greater than 25 mm (1 in.).

7.3.6 Gloves shall be tested for resistance to puncture as specified in Section 8.24, Puncture Resistance Test, and shall have a puncture force of not less than 40 N (8.8 lbf).

7.3.7 Gloves shall be tested for dexterity as specified in Section 8.25, Dexterity Test, and shall have an average percent of bare-handed control not exceeding 200 percent.

7.3.8 Gloves shall be tested for grip as specified in Section 8.26, Grip Test, and shall demonstrate a weight-pulling capacity of not less than 90 percent of the bare-handed control values.

7.3.9 Glove product labels shall be tested for legibility as specified in Section 8.31, Label Durability and Legibility Test 1, and shall not be torn, shall remain in place, and shall be legible to the unaided eye.

7.3.10 All sewing thread utilized in the construction of gloves shall be tested for resistance to melting as specified in Section 8.9, Thread Heat Resistance Test, and shall not ignite, melt, or char.

7.4 Protective Footwear Item Performance Requirements.

7.4.1 Footwear shall be tested for resistance to heat as specified in Section 8.4, Heat and Thermal Shrinkage Resistance Test, and, excluding laces, shall have no part of the footwear melt, shall have no delamination of any part of the footwear, and shall have all hardware remain functional.

7.4.2 Footwear metal parts shall be tested for resistance to corrosion as specified in Section 8.27, Corrosion Resistance Test. Metals inherently resistant to corrosion — including but not limited to stainless steel, brass, copper, aluminum, and zinc — shall show no more than light surface-type corrosion or oxidation. Ferrous metals shall show no corrosion of the base metals. Hardware shall remain functional.

7.4.3 Footwear shall be tested for resistance to cut as specified in Section 8.23, Cut Resistance Test, and shall have a distance of blade travel greater than 25 mm (1 in.).

7.4.4 Footwear shall be tested for resistance to puncture as specified in Section 8.24, Puncture Resistance Test, and shall have a puncture force of not less than 59 N (13 lbf).

7.4.5 Footwear sole and heel composites, excluding the sole and heel composites of caulked boots, shall be tested for resistance to abrasion as specified in Section 8.18, Protective Footwear Abrasion Test, and shall have an abrasion resistance rating of not less than 100 NBS index.

7.4.6 Footwear shall be tested for resistance to conductive heat as specified in Section 8.28, Footwear Conductive Heat Resistance Test, and the footwear inside sole surface temperature shall not exceed 44°C (111°F).

7.4.7 Footwear sole composites shall be tested for slip resistance as specified in ASTM F 489, *Standard Test Method for Using a James Machine*, and shall have a minimum static coefficient of friction value of 0.5.

7.4.8 Footwear eyelets and stud hooks shall be tested for attachment strength as specified in Section 8.29, Eyelet and Stud Post Attachment Test, and shall have a minimum detachment strength of 294 N (66 lbf).

7.4.9 Footwear, without laces in place, shall be tested for resistance to flame as specified in Section 8.14, Flame Resistance Test for Protective Footwear, and shall not have an afterflame greater than 2 seconds and shall not melt, drip, or ignite.

7.4.10 Footwear product labels shall be tested for legibility as specified in Section 8.31, Label Durability and Legibility Test 1, and shall not be torn, shall remain in place, and shall be legible to the unaided eye.

7.4.11 All sewing thread utilized in the construction of footwear shall be tested for resistance to melting as specified in Section 8.9, Thread Heat Resistance Test, and shall not ignite, melt, or char.

7.5 Protective Face/Neck Shroud Item Performance Requirements.

7.5.1 Face/neck shroud textile fabrics shall be tested for radiant protective performance as specified in Section 8.2, Radiant Protective Performance (RPP) Test, and shall have an average RPP value of not less than 7.

7.5.2 Face/neck shroud textile fabrics and other materials used in garment construction — including but not limited to labels, linings, padding, reinforcements, bindings, but excluding hook and pile fasteners, elastic, and interlinings where not in direct contact with the skin — shall be individually tested for resistance to flame as specified in Section 8.3, Flame Resistance Test, and shall not have a char length of more than 100 mm (4 in.) average, shall not have an afterflame of more than 2 seconds average, and shall not melt or drip.

7.5.3 Face/neck shroud textile fabrics and interlinings shall be individually tested for resistance to heat as specified in Section 8.4, Heat and Thermal Shrinkage Resistance Test, and shall not shrink more than 10 percent in any direction.

7.5.4 Face/neck shroud textile fabrics and interlinings and other materials used in face/neck shroud construction — including but not limited to padding, reinforcements, labels, closures, fasteners, and bindings, but excluding hook and pile fasteners and elastic where not in direct contact with the skin — shall be individually tested for resistance to heat as specified in Section 8.4, Heat and Thermal Shrinkage Resistance Test, and shall not melt, drip, separate, or ignite. In addition, face/neck shroud outer-shell textile fabrics shall not char.

7.5.5 All face/neck shroud hardware shall be individually tested for resistance to heat as specified in Section 8.4, Heat and Thermal Shrinkage Resistance Test, and shall not ignite and shall remain functional.

Copyright National Fire Protection Association
Provided by IHS under license with NFPA
No reproduction or networking permitted without license from IHS
Not for Resale

7.5.6 Face/neck shroud textile fabrics shall be individually tested for resistance to tearing as specified in Section 8.6, Tear Resistance Test, and shall have a tear strength of not less than 23 N (5 lbf).

7.5.6.1 Where face/neck shroud fabrics are knit materials, these materials shall instead be individually tested for burst strength as specified in Section 8.10, Burst Strength Test, and shall have a burst strength of not less than 113 N (25 lbf).

7.5.7 Face/neck shroud textile fabrics shall be individually tested for resistance to shrinkage as specified in Section 8.7, Cleaning Shrinkage Resistance Test, and shall not shrink more than 5 percent in any direction.

7.5.8 All face/neck shroud seam assemblies shall be tested for strength as specified in Section 8.8, Seam Breaking Strength Test.

7.5.8.1 Woven face/neck shroud seam assemblies and seam assemblies that contain at least one woven material shall demonstrate a sewn seam strength equal to or greater than 225 N (50 lbf).

7.5.8.2 Where the fabric strength is less than the required seam strength specified in 7.5.8.1, providing the fabric fails without failure of the seam below the force specified in 7.5.8.1, the seam breaking strength shall be considered acceptable.

7.5.9 All sewing thread utilized in the construction of face/neck shrouds shall be tested for resistance to melting as specified in Section 8.9, Thread Heat Resistance Test, and shall not ignite, melt, or char.

7.5.10 Face/neck shroud product labels shall be tested for legibility as specified in Section 8.31, Label Durability and Legibility Test 1, and shall not be torn, shall remain in place, and shall be legible to the unaided eye.

7.6 Protective Goggle Item Performance Requirements.

7.6.1 Goggles shall be tested for heat resistance as specified in Section 8.4, Heat and Thermal Shrinkage Resistance Test, and the goggles shall show no evidence of dripping, melting, or ignition; the lens shall not separate from the frame; the goggles shall remain above the brim of the helmet; the retention strap shall not dislodge from the goggles; and the retention strap shall be capable of securing the goggles to the headform in the area surrounding the eyes. The test subject shall be able to read 20/100 on the standard eye chart with each eye.

7.6.2 All sewing thread utilized in the construction of goggles shall be tested for resistance to melting as specified in Section 8.9, Thread Heat Resistance Test, and shall not ignite, melt, or char.

7.7 Chain Saw Protector Item Performance Requirements.

7.7.1 Chain saw protectors shall be tested for cut resistance as specified in Section 8.30, Chain Saw Cut Resistance Test, and shall not cut through.

7.7.2 Fabrics used for chain saw protectors shall be tested for heat resistance as specified in Section 8.4, Heat and Thermal Shrinkage Resistance Test, and shall not melt, drip, separate, or ignite.

7.7.3 All hardware used with chain saw protectors shall be tested for heat resistance as specified in Section 8.4, Heat and Thermal Shrinkage Resistance Test, and shall not melt, drip, separate, or ignite and shall remain functional.

7.7.4 All sewing thread utilized in the construction of chain saw protectors shall be tested for resistance to melting as specified in Section 8.9, Thread Heat Resistance Test, and shall not ignite, melt, or char.

7.8 Load Carrying Protective Equipment Item Performance Requirements.

7.8.1 Load carrying equipment shall be tested for resistance to heat as specified in Section 8.4, Heat and Thermal Shrinkage Resistance Test, and shall not melt, drip, separate, or ignite.

7.8.2 Load carrying equipment hardware and closure systems shall be tested for resistance to heat as specified in Section 8.4, Heat and Thermal Shrinkage Resistance Test, and shall not melt, drip, separate, or ignite and shall have hardware and closure systems that release the item from the "as worn" position remain functional.

7.8.3 All sewing thread utilized in the construction of load carrying equipment shall be tested for resistance to melting as specified in Section 8.9, Thread Heat Resistance Test, and shall not ignite, melt, or char.

7.8.4 Where trim is used on load carrying equipment, trim shall be tested for retroreflectivity as specified in Section 8.16, Retroreflectivity and Fluorescence Test, and shall have a total coefficient of retroreflection (R_A) of not less than 100 cd/lux/m^2 (cd/fc/ft^2).

7.8.5 Where trim is used on load carrying equipment and includes both retroreflective and fluorescent materials, trim shall be tested for both retroreflectivity and fluorescence as specified in Section 8.16, Retroreflectivity and Fluorescence Test, and shall have a total coefficient of retroreflection (R_A) of not less than 100 cd/lux/m^2 (cd/fc/ft^2) and shall be designated as fluorescent.

Chapter 8 Test Methods

8.1 Preconditioning.

8.1.1 Room Temperature Conditioning Procedure for Protective Garments, Trim, Helmets, Load Carrying Equipment, Gloves, Footwear, Goggles, and Chain Saw Protection.

8.1.1.1 Garment, helmet, load carrying equipment, glove, footwear, goggles, and chain saw leg protection specimens shall be conditioned at a temperature of 21°C, ±3°C (70°F, ±5°F), and a relative humidity of 65 percent, ±5 percent, until equilibrium is reached, as determined in accordance with ASTM D 1776, *Standard Practice for Conditioning Textiles for Testing*, or for at least 24 hours, whichever is shorter. Specimens shall be tested within 5 minutes after removal from conditioning.

8.1.2 Laundering Preconditioning.

8.1.2.1 Textile fabrics specified to be laundered shall be laundered and dried for testing in accordance with the procedures specified in Machine Cycle 3, Wash Temperature II, and Drying Procedure Aiii of AATCC 135, *Dimensional Changes in Automatic Home Laundering of Woven and Knit Fabrics.*

8.1.2.2 A 1.8 kg ± 0.1 kg (4 lb ± 0.2 lb) load shall be used. A laundry bag shall not be used.

Copyright National Fire Protection Association
Provided by IHS under license with NFPA
No reproduction or networking permitted without license from IHS
Not for Resale

8.1.3 Convective Heat Conditioning Procedure for Trim.

8.1.3.1 Samples shall be conditioned by exposing them to the procedure specified in 8.4.5 with the following modifications:

(1) The oven test temperature in 8.4.5.4 shall be stabilized at 140°C, +6°/–0°C (285°F, +10°/–0°F), and the test exposure shall be 10 minutes, +15/–0 seconds.
(2) The test exposure time shall begin when the test thermocouple reading has stabilized at the required test exposure temperature.
(3) The requirements of 8.4.5.5 and 8.4.5.6 shall be disregarded.

8.1.4 Radiant Heat Environmental Conditioning Procedure for Protective Helmets.

8.1.4.1 Sample helmets shall be conditioned by exposing the area to be impacted/penetrated to a radiant heat source. The test area to be impacted/penetrated shall be as specified in Figure 8.1.4.1.

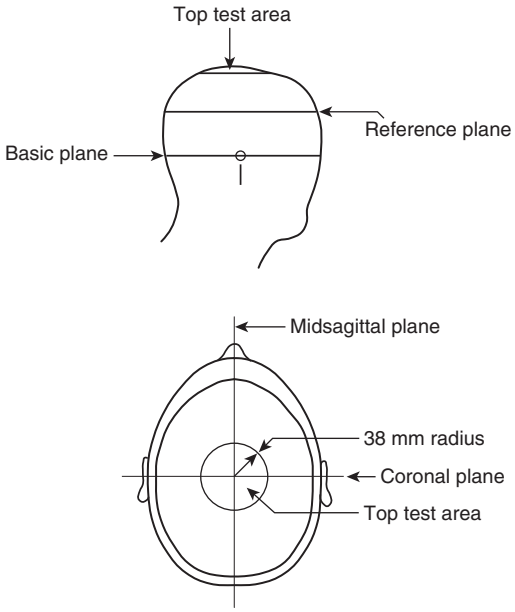

FIGURE 8.1.4.1 Helmet Test Area and Landmarks.

8.1.4.2 The area to be impacted/penetrated shall be exposed to an irradiance of 1.0 W/cm^2, ±0.1 W/cm^2, for a length of time determined by exposure of a radiant heat transducer.

8.1.4.3 The heat source shall be removed and the helmet shall be tested. The helmet shall be impacted/penetrated in 15 seconds, ±5 seconds, after removal from the conditioning environment, or the helmet shall be cooled to room temperature and reconditioned before testing.

8.1.4.4 The radiometer shall have a spectral response flat within ±3 percent over a range of at least 1.0 μm to 10.1 μm (0.00004 in. to 0.0004 in.) and an overall accuracy of at least ±5 percent of the reading.

8.1.4.5 The radiant panel shall have an effective radiating surface at least 150 mm, ±6 mm (6 in., ±¼ in.) square. The spectral radiant emittance curve of the radiant panel shall be that of a blackbody at a temperature of 1000 K, ±200 K (1340°F, ±360°F).

8.1.4.6 The radiant heat transducer shown in Figure 8.1.4.6 shall be constructed from sheet copper as specified in ASTM B 152, *Standard Specification for Copper Sheet, Strip, Plate, and Rolled Bar*, Type 110 ETP, half hard, 0.64 mm, ±0.05 mm (0.025 in., ±0.002 in.) thick and 508 mm, ±0.5 mm (2 in., ±0.02 in.) square.

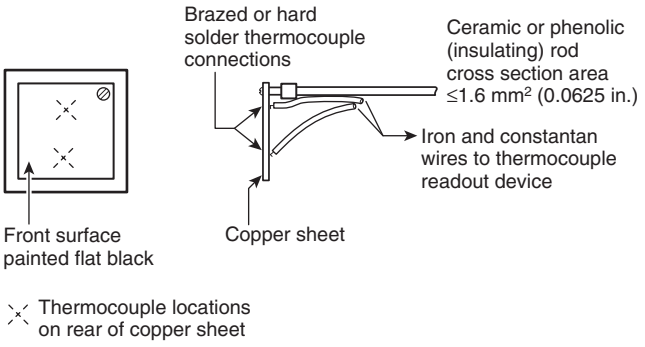

FIGURE 8.1.4.6 Radiant Heat Transducer.

8.1.4.6.1 A constantan wire 0.81 mm, ±0.05 mm (0.032 in., ±0.002 in.) in diameter and an iron wire of the same diameter shall be silver soldered near the edges of the copper sheet on the same side, as shown in Figure 8.1.4.6.

8.1.4.6.2 The side of the copper sheet opposite that with the wires attached shall be painted flat black.

8.1.4.6.3 The resulting transducer is a Type J thermocouple that shall be used in conjunction with appropriate instrumentation to monitor the heat exposure to which the helmet is to be subjected.

8.1.4.7 Sample helmets shall be mounted in the position to be conditioned. The point of impact or penetration on the helmet shell shall be determined in accordance with the specific test to be performed.

8.1.4.8 The helmet shall be removed temporarily, and a radiometer shall be located at that point perpendicular to and facing away from the helmet surface.

8.1.4.9 The radiant panel shall be introduced in front of the radiometer with its effective radiating surface parallel to the plane tangent to the helmet surface at the center of the impact/penetration site on the helmet.

8.1.4.9.1 The radiant panel shall be adjusted to obtain a stable uniform irradiance of 1.0 W/cm^2, ±0.1 W/cm^2, over a minimum 75 mm (3 in.) diameter circle located on the above plane and centered at the center of impact or penetration.

8.1.4.9.2 Stability shall be achieved when the irradiance changes by less than 10 percent during a 3-minute period.

8.1.4.10* The radiometer shall be replaced with the radiant heat transducer. The center of the transducer shall be positioned with its center coincident with the center of the impact/penetration site on the helmet and parallel to the plane tangent to the helmet surface at that point.

8.1.4.10.1 The flat-black surface of the transducer shall face the radiant panel.

Copyright National Fire Protection Association
Provided by IHS under license with NFPA
No reproduction or networking permitted without license from IHS
Not for Resale

8.1.4.10.2 The time required for the transducer to reach a temperature of 177°C (350°F) shall be 1 minute, +5/–0 seconds, and the exact time shall be recorded.

8.1.4.10.3 A closed insulated chamber shall be required to achieve this exposure time.

8.1.4.11 The chamber and helmet shall be stabilized at 25°C, ±5°C (77°F, ±9°F).

8.1.4.12 The helmet shall be positioned in the chamber in the same position specified in 8.1.4.7.

8.1.4.12.1 The helmet shall be subjected to the exposure conditions specified in 8.1.4.2 for the time recorded in 8.1.4.10.2.

8.1.4.12.2 The exposure time shall be not less than the time recorded in 8.1.4.10.2 nor more than 5 seconds longer than that time.

8.2 Radiant Protective Performance (RPP) Test.

8.2.1 Application.

8.2.1.1 This test method shall apply to protective garment and face/neck shroud materials.

8.2.1.2 Modifications to this test method for testing garment materials shall be as specified in 8.2.8.

8.2.1.3 Modifications to this test method for testing face/neck shroud materials shall be as specified in 8.2.9.

8.2.2 Specimens.

8.2.2.1 Radiant protective performance testing shall be conducted on three specimens.

8.2.2.2 Specimens shall measure 100 mm × 200 mm, ±6 mm (4 in. × 8 in., ±¼ in.) with the long dimension in the warp or wale direction and shall consist of all layers representative of the clothing item to be tested.

8.2.3 Sample Preparation. Specimens shall be tested before and after five laundering cycles as specified in 8.1.2 and then preconditioning as specified in 8.1.1.

8.2.4 Apparatus.

8.2.4.1 The test apparatus specified in ASTM F 1939, *Standard Test Method for Radiant Protective Performance of Flame Resistant Clothing Materials*, shall be used with the following modifications:

(1) The vertically oriented radiant heat source shall consist of a bank of five 500 W infrared, tubular, quartz lamps having a 125 mm (5 in.) lighted length and a mean overall length of 225 mm (8¾ in.).
(2) The control of the radiant heat source shall be permitted to be a variable transformer.
(3) The means for affixing the sample holder shall be permitted to be by any means that achieve the required specimen positioning in the test apparatus.
(4) No additional materials (e.g., a protective screen) shall be placed between the radiant lamps and the sample.

8.2.5 Procedure.

8.2.5.1 Radiant protective performance (RPP) testing shall be performed in accordance with ASTM F 1939, *Standard Test Method for Radiant Protective Performance of Flame Resistant Clothing Materials*, at a radiant heat exposure level of 21 kW/m^2 (0.5 cal/cm^{2}s).

8.2.5.2 A modification for the warm-up period for the radiant lamp to 60 seconds, +5/–0 seconds shall be used.

8.2.6 Report.

8.2.6.1 The individual test RPP rating of each specimen shall be recorded and reported.

8.2.6.2 The average RPP rating shall be calculated, recorded, and reported.

8.2.6.3 If a RPP rating is greater than 60, then the RPP rating shall be recorded and reported as ">60."

8.2.7 Interpretation.

8.2.7.1 Pass or fail determinations shall be based on the average reported RPP rating of all specimens tested.

8.2.7.2 If an individual result from any test set varies more than ±8 percent from the average result, the results from that test set shall be discarded and another set of specimens shall be tested.

8.2.8 Specific Requirements for Testing Garment Materials.

8.2.8.1 Specimens shall consist of all layers used in the construction of the garment, excluding any areas with special reinforcements. Specimens shall not include seams. Specimens shall not be stitched to hold individual layers together.

8.2.8.2 Samples for conditioning shall be at least 1 m (1 yd) square of each material.

8.2.8.3 Testing shall be performed as described in 8.2.2 through 8.2.7.

8.2.9 Specific Requirements for Testing Protective Face/Neck Shroud Materials.

8.2.9.1 Specimens shall consist of materials from the portion of the face/neck shroud that covers the neck and facial area.

8.2.9.2 Specimens shall not include seams.

8.2.9.3 Specimens shall not be stitched to hold individual layers together.

8.2.9.4 Samples for conditioning shall include face/neck shroud material that is a minimum of 100 mm × 200 mm, ±6 mm (4 in. × 8 in., ±¼ in.) with the long dimension in the warp or wale direction.

8.2.9.5 Testing shall be performed as described in 8.2.2 through 8.2.7.

8.3 Flame Resistance Test.

8.3.1 Application.

8.3.1.1 This test method shall apply to protective garment and face/neck shroud textiles.

8.3.1.2 Modifications to this test method for testing woven textile materials shall be as specified in 8.3.8.

8.3.1.3 Modifications to this test method for testing knit textile materials shall be as specified in 8.3.9.

8.3.1.4 Modifications to this test method for testing nonwoven textile materials shall be as specified in 8.3.10.

8.3.1.5 Modifications to this test method for testing trim materials shall be as specified in 8.3.11.

8.3.1.6 Modifications to this test method for testing lettering, including transfer film, shall be as specified in 8.3.12.

Copyright National Fire Protection Association
Provided by IHS under license with NFPA
No reproduction or networking permitted without license from IHS
Not for Resale

8.3.1.7 Modifications to this test method for testing small specimens not meeting the specimen size requirements of 8.3.2.1 shall be as specified in 8.3.13.

8.3.2 Specimens.

8.3.2.1 Specimens shall consist of a 75 mm × 300 mm (3 in. × 12 in.) rectangle with the long dimension parallel to the warp or filling direction, the wale or coarse direction, or the machine or cross machine direction of the material.

8.3.2.2 Each individual layer of multilayer material systems or composites shall be separately tested.

8.3.3 Sample Preparation.

8.3.3.1 Specimens of garment textile fabrics and face/neck shroud textile fabrics shall be tested both before and after being subjected to 100 laundering cycles as specified in 8.1.2.

8.3.3.2 Specimens of trim and lettering shall be tested both before and after being subjected to five laundering cycles as specified in 8.1.2.

8.3.3.3 All specimens to be tested shall be conditioned as specified in 8.1.1.

8.3.4 Apparatus.

8.3.4.1 The test apparatus specified in ASTM D 6413, *Standard Test Method for Flame Resistance of Textiles (Vertical Test)*, shall be used.

8.3.5 Procedure.

8.3.5.1 Flame resistance testing shall be performed in accordance with ASTM D 6413, *Standard Test Method for Flame Resistance of Textiles (Vertical Test)*.

8.3.5.2 Each specimen shall be examined for evidence of melting or dripping.

8.3.6 Report.

8.3.6.1 The afterflame time and char length shall be recorded and reported for each specimen.

8.3.6.2 The average afterflame time and char length for each material shall be calculated, recorded, and reported.

8.3.6.3 The afterflame time shall be recorded and reported to the nearest 0.2 second, and the char length shall be recorded and reported to the nearest 3 mm (⅛ in.).

8.3.6.4 Observations of melting or dripping for each specimen shall be recorded and reported.

8.3.7 Interpretation.

8.3.7.1 Pass or fail performance shall be based on any observed melting or dripping, the average afterflame time, and the average char length.

8.3.7.2 Failure in any direction shall constitute failure of the material.

8.3.8 Specific Requirements for Testing Woven Textile Materials.

8.3.8.1 Five specimens from the warp direction and five specimens from the filling direction shall be tested. No two warp specimens shall contain the same warp yarns, and no two filling specimens shall contain the same filling yarns.

8.3.8.2 Samples for conditioning shall be at least 1 m (1 yd) square of each material.

8.3.8.3 Testing shall be performed as described in 8.3.2 through 8.3.7.

8.3.9 Specific Requirements for Testing Knit Textile Materials.

8.3.9.1 Five specimens from each of the two directions shall be tested.

8.3.9.2 Samples for conditioning shall include material that is a minimum of 75 mm × 305 mm (3 in. × 12 in.).

8.3.9.3 Testing shall be performed as described in 8.3.2 through 8.3.7.

8.3.10 Specific Requirements for Testing Nonwoven Textile Materials.

8.3.10.1 Five specimens from the machine direction and five specimens from the cross machine direction shall be tested.

8.3.10.2 Samples for conditioning shall be at least 1 m (1 yd) square of each material.

8.3.10.3 Testing shall be performed as described in 8.3.2 through 8.3.7.

8.3.11 Specific Requirements for Testing Trim Materials.

8.3.11.1 Five trim specimens for flammability testing shall be at least 50 mm (2 in.) wide but no more than 75 mm (3 in.) wide.

8.3.11.2 Where trim material specimens are not wide enough to fit into the test frame, a narrower test frame of sufficient width to accommodate the available trim width shall be constructed.

8.3.11.3 The cut edge of the trim specimen shall be oriented such that it is exposed directly to the burner flame.

8.3.11.4 Samples for conditioning shall include material sewn onto a 1 m (1 yd) square ballast material no closer than 50 mm (2 in.) apart in parallel strips.

8.3.11.5 The ballast material shall be as specified in AATCC 135, *Dimensional Changes in Automatic Home Laundering of Woven and Knit Fabrics*. Specimens shall be removed from the ballast material prior to testing.

8.3.11.6 Testing shall be performed as described in 8.3.2 through 8.3.7.

8.3.12 Specific Requirements for Testing Lettering, Including Transfer Film.

8.3.12.1 Lettering, including transfer film, shall be applied to outer shell material meeting the requirements of this standard for testing as specified in 8.3.13.2.

8.3.12.2 Letter specimens for flammability testing shall be at least 50 mm (2 in.) wide and no more than 75 mm (3 in.) in width. Samples shall be selected where lettering is most dense.

8.3.12.3 Samples for conditioning shall be outer-shell material 1 m (1 yd) square.

8.3.12.4 Testing shall be performed as described in 8.3.2 through 8.3.7, but the char length shall not be measured.

8.3.13 Specific Requirements for Testing Small Materials.

8.3.13.1 Five specimens attached to the textile layer as used in the protective garments shall be tested. The specimens shall be attached to the textile layer such that the bottom (exposure) edge of the item coincides with the bottom (exposure) edge of the textile support layer.

Copyright National Fire Protection Association
Provided by IHS under license with NFPA
No reproduction or networking permitted without license from IHS
Not for Resale

8.3.13.2 Samples for conditioning shall be 1 m (1 yd) square of the textile layer on which the small specimens are attached.

8.3.13.3 Testing shall be performed as described in 8.3.2 through 8.3.7, but the char length shall not be measured.

8.4 Heat and Thermal Shrinkage Resistance Test.

8.4.1 Application.

8.4.1.1 This test method shall apply to garment textiles, trim, label materials, and hardware; helmets; gloves; footwear; face/neck shroud textiles; load carrying equipment; goggles and goggle straps; and chain saw protectors.

8.4.1.2 Modifications to this test method for testing garment and face/neck shroud textiles shall be as specified in 8.4.8.

8.4.1.3 Modifications to this test method for testing small specimens not meeting the size requirements of 8.4.8 for face/neck shroud materials and for trim and label materials shall be as specified in 8.4.9.

8.4.1.4 Modifications to this test method for testing helmets shall be specified in 8.4.11.

8.4.1.5 Modifications to this test method for testing gloves shall be as specified in 8.4.12.

8.4.1.6 Modifications to this test method for testing footwear shall be as specified in 8.4.13.

8.4.1.7 Modifications to this test method for testing load carrying equipment shall be as specified in 8.4.14.

8.4.1.8 Modifications to this test method for testing goggles shall be as specified in 8.4.15.

8.4.1.9 Modifications to this test method for testing chain saw protectors shall be as specified in 8.4.16.

8.4.2 Specimens.

8.4.2.1 Both heat and thermal shrinkage resistance testing shall be conducted on a minimum of three specimens for each garment textile and face/neck shroud textile and whole gloves.

8.4.2.2 Each separable layer of multilayer material systems or composites shall be tested as an individual layer.

8.4.2.3 Only heat resistance testing shall be conducted on a minimum of three specimens for each hardware item, helmet, footwear, load carrying equipment, goggle straps, and chain saw leg protectors.

8.4.3 Sample Preparation. All specimens to be tested shall be conditioned as specified in 8.1.1.

8.4.4 Apparatus.

8.4.4.1 The test oven shall be a horizontal-flow circulating oven with minimum interior dimensions so that the specimens can be suspended and are at least 50 mm (2 in.) from any interior oven surface and other test specimens.

8.4.4.2 The test oven shall have an airflow rate of 38 m/min to 76 m/min (125 ft/min to 250 ft/min) at the standard temperature and pressure of 21°C (70°F) at 1 atmosphere, measured at the center point of the oven.

8.4.4.3 A test thermocouple shall be positioned so that it is level with the horizontal centerline of a mounted sample specimen.

8.4.4.4 The thermocouple shall be equidistant between the vertical centerline of a mounted specimen placed in the middle of the oven and the oven wall where the airflow enters the test chamber.

8.4.4.5 The thermocouple shall be an exposed bead, Type J or Type K, No. 30 AWG thermocouple.

8.4.4.6 Unless otherwise specified for the specific item, the test oven shall be heated and the test thermocouple stabilized at 260°C, +6°/–0°C (500°F, +10°/–0°F) for a period of not less than 30 minutes.

8.4.5 Procedure.

8.4.5.1 Specimen marking and measurements shall be conducted in accordance with the procedure specified in AATCC 135, *Dimensional Changes in Automatic Home Laundering of Woven and Knit Fabrics*.

8.4.5.2 The specimen shall be suspended at the top and centered in the oven so that the entire specimen is not less than 50 mm (2 in.) from any oven surface or other specimen, and airflow is parallel to the plane of the material.

8.4.5.3 The oven door shall not remain open more than 15 seconds. The air circulation shall be shut off while the door is open and turned on when the door is closed. The total oven recovery time after the door is closed shall not exceed 30 seconds.

8.4.5.4 The specimen, mounted as specified, shall be exposed in the test oven for 5 minutes, +15/–0.0 seconds. The test exposure time shall begin when the test thermocouple recovers to a temperature of 260°C, +6°/–0°C (500°F, +10°/–0°F) or other temperature specific to the item as specified.

8.4.5.5 Immediately after the specified exposure, the specimen shall be removed and examined for evidence of ignition, melting, dripping, or separation.

8.4.5.6 After the specified exposure, the specimen also shall be measured to determine pass/fail. Knit fabric shall be pulled to its original dimensions and shall be allowed to relax for 1 minute prior to measurement to determine pass/fail.

8.4.6 Report.

8.4.6.1 Observations of ignition, melting, dripping, or separation shall be recorded and reported for each specimen.

8.4.6.2 The percent change in the width and length dimensions of each specimen shall be calculated, recorded, and reported.

8.4.6.3 Results shall be recorded and reported as the average of all three specimens in each dimension.

8.4.7 Interpretation.

8.4.7.1 Any evidence of ignition, melting, dripping, or separation on any specimen shall constitute failing performance.

8.4.7.2 The average percent change in both dimensions shall be used to determine pass or fail performance.

8.4.7.3 Failure in any one dimension constitutes failure for the entire sample.

8.4.8 Specific Requirements for Testing Protective Garments and Protective Face/Neck Shroud Textiles.

8.4.8.1 Samples for conditioning shall be at least 1 m (1 yd) square of each material.

Copyright National Fire Protection Association
Provided by IHS under license with NFPA
No reproduction or networking permitted without license from IHS
Not for Resale

8.4.8.2 Each specimen shall be 380 mm square, ±13 mm (15 in. square, ±½ in.) and shall be cut from the fabric to be utilized in the construction of the item.

8.4.8.3 Specimens shall be tested both before and after five cycles of washing and drying as specified in 8.1.2.

8.4.8.4 Testing shall be performed as specified in 8.4.2 through 8.4.7.

8.4.8.5 Any evidence of charring on any specimen of garment or face/neck shroud textiles shall also constitute failing performance in addition to the provisions of 8.4.7.1.

8.4.9 Specific Requirement for Testing Other Garments and Protective Face/Neck Shroud Materials, Trim, and Label Materials of Protective Garments.

8.4.9.1 Specimen length shall be 150 mm (6 in.), other than for textiles utilized in the clothing item in lengths less than 150 mm (6 in.), where length shall be the same as utilized in the clothing item.

8.4.9.2 Specimen width shall be 150 mm (6 in.), other than for textiles utilized in the clothing item in widths less than 150 mm (6 in.), where widths shall be the same as utilized in the clothing item.

8.4.9.3 Samples for conditioning shall include material sewn onto a 1 m (1 yd) square ballast material no closer than 50 mm (2 in.) apart in parallel strips. The ballast material shall be as specified in AATCC 135, *Dimensional Changes in Automatic Home Laundering of Woven and Knit Fabrics*. Specimens shall be removed from the ballast material prior to testing.

8.4.9.4 Testing shall be performed as described in 8.4.2 through 8.4.7.

8.4.9.5 Thermal shrinkage shall not be measured.

8.4.10 Specific Requirements for Testing Hardware.

8.4.10.1 A minimum of three complete hardware items shall be tested.

8.4.10.2 Observations of hardware condition following heat exposure shall be limited to ignition.

8.4.10.3 Hardware shall be evaluated for functionality within 10 minutes following removal from the oven.

8.4.10.4 The functionality of each hardware item shall be reported as pass or fail. Failure of any one item shall constitute failure for the entire sample.

8.4.10.5 Testing shall be performed as specified in 8.4.2 through 8.4.7. Thermal shrinkage shall not be measured.

8.4.11 Specific Testing Requirements for Protective Helmets.

8.4.11.1 A minimum of three helmets of each different style or model shall be tested.

8.4.11.2 Specimen helmets shall be securely mounted on a room-temperature nonmetallic headform in the "as worn" position.

8.4.11.3 A liner, ear flaps, or similar device shall be deployed to protect the suspension, if necessary.

8.4.11.4 Specimens shall be conditioned as specified in 8.1.1.

8.4.11.5 A series of points shall be marked 75 mm (3 in.) apart on the outer edge of the peak or brim of the sample helmets, allowing at least three points on the peak and eight or more points on the full brim. The vertical distance from a known horizontal base plane to the marked points on the peak or brim shall be measured and recorded.

8.4.11.6 The test oven shall be a horizontal-flow circulating air oven with minimum internal dimensions of 460 mm × 460 mm × 460 mm (18 in. × 18 in. × 18 in.).

8.4.11.7 The oven shall be heated and stabilized to a temperature of 177°C, +6°/–0°C (350°F, +10°/–0°F) for a minimum of 30 minutes.

8.4.11.8 The sample helmet mounted on the headform shall be placed in the center of the oven. If the sample helmet contains a peak only, the sample helmet shall face into the airflow.

8.4.11.9 After 5 minutes, +15/–0 seconds, oven exposure at 177°C, +6°/–0°C (350°F, +10°/–0°F), the sample helmet mounted on the headform shall be removed and allowed to cool for a minimum of 2 minutes.

8.4.11.10 The vertical distance from the marked points to the base plane shall be measured, recorded, and compared with the measurements recorded in 8.4.11.5 to determine pass/fail.

8.4.12 Specific Requirements for Testing Protective Gloves.

8.4.12.1 Specimens shall include complete gloves with labels.

8.4.12.2 Specimen gloves shall be preconditioned as specified in 8.1.1. Specimen gloves shall then be placed in a circulating air oven for not less than 4 hours at 49°C, +2°/–0°C (120°F, +5°/–0°F).

8.4.12.3 The glove body shall be filled with 4 mm (3⁄16 in.) perforated soda-lime glass beads, with care taken to tightly pack the glass beads into the fingers of the glove and glove body.

8.4.12.4 The opening of the glove shall be clamped together, and the specimen shall be suspended by the clamp in the oven so that the entire glove is not less than 50 mm (2 in.) from any oven surface or other specimen and airflow is parallel to the plane of the material.

8.4.12.5 The test oven shall be heated and the test thermocouple stabilized at 204°C, +6°/–0°C (400°F, +10°/–0°F) for a minimum of 30 seconds.

8.4.12.6 After 5 minutes, +15/–0 seconds, oven exposure at 204°C, +6°/–0°C (400°F, +10°/–0°F), the sample gloves shall be removed and allowed to cool for a minimum of 2 minutes.

8.4.12.7 An assessment of the glove donnability and flexibility shall be made after the heat exposure by having a test subject whose hand dimensions are appropriate for wearing the glove put the glove on and attempt to clutch the hands into a fist five times.

8.4.12.8 The dimensions of the glove specimen shall also be measured to determine pass or fail.

8.4.12.8.1 Glove measurements shall be made following preconditioning and after the oven heat exposure specified in 8.4.12.5.

8.4.12.8.2 The length measurement of the glove specimen shall be from the tip of the middle finger to the end of the glove body on the palm side.

Copyright National Fire Protection Association
Provided by IHS under license with NFPA
No reproduction or networking permitted without license from IHS
Not for Resale

8.4.12.8.3 The width measurement of the glove specimen shall be the width measurement on the palm side 25 mm (1 in.) below the base of the fingers.

8.4.12.9 The percent change in the width and length dimensions of each specimen shall be calculated. Results shall be reported as the average of all three specimens in each dimension.

8.4.12.10 Testing shall be performed as described in 8.4.2 through 8.4.7.

8.4.13 Specific Testing Requirement for Protective Footwear.

8.4.13.1 Samples for conditioning shall be whole boots. Footwear specimens shall include sole, heel, and upper.

8.4.13.2 Conditioning shall be performed as specified in 8.1.1.

8.4.13.3 The footwear specimen shall be size 9.

8.4.13.4 Footwear specimens shall be filled with 4 mm (3⁄16 in.) perforated soda-line glass beads. Any closures shall be fastened.

8.4.13.5 The test thermocouple shall be positioned so that it is level with the horizontal centerline of a footwear test specimen. The thermocouple shall be equidistant between the vertical centerline of a footwear test specimen placed in the middle of the oven and the oven wall where the airflow enters the test chamber.

8.4.13.6 The minimum dimensions for the test oven specified in 8.4.4.1 shall be 610 mm × 610 mm × 610 mm (24 in. × 24 in. × 24 in.).

8.4.13.7 The protective footwear test specimen shall be placed in the center of the test oven with the centerline of the front of the specimen facing the airflow.

8.4.13.8 Following removal from the oven, the specimen shall be allowed to cool at room temperature for not less than 5 minutes, +15/–0 seconds.

8.4.13.9 Each tested specimen shall be reconditioned as specified in 8.1.1 and then re-examined inside and outside for separation and functionality of hardware on the footwear. The functionality of each part of the footwear shall be reported as pass or fail. Failure of any one part shall constitute failure for the entire sample.

8.4.13.10 Testing shall be performed as specified in 8.4.2 through 8.4.7. Thermal shrinkage shall not be measured.

8.4.14 Specific Testing Requirements for Load Carrying Protective Equipment.

8.4.14.1 A minimum of three complete load carrying equipment items shall be tested. The load carrying equipment items shall have all hardware secured that is used for the wearer to put on and take off the item in its normal wearing position.

8.4.14.2 Conditioning shall be performed as specified in 8.1.1.

8.4.14.3 The specimen shall be suspended at the top and centered in the oven so that the entire specimen is not less than 50 mm (2 in.) from any oven surface or other specimen, and airflow is parallel to the plane of the long axis of the load carrying equipment item.

8.4.14.4 The test oven shall be heated and the test thermocouple stabilized at 232°C, +6°/–0°C (450°F, +10°/–0°F) for a minimum of 30 minutes.

8.4.14.5 Specimens shall be exposed for 5 minutes, +15/–0 seconds, to 232°C, +6°/–0°C (450°F, +10°/–0°F).

8.4.14.6 Immediately after the specified exposure, specimens shall be removed and examined for evidence of ignition, melting, dripping, or separation.

8.4.14.7 Within 30 seconds of removing specimens from the oven, the function of any hardware that is used for removal of the load carrying equipment item from the wearer's body shall be tested for complete release. Within 5 minutes of removing specimens from the oven, all hardware shall be tested for functionality.

8.4.14.8 The functionality of hardware shall be reported as pass or fail. Failure of any one hardware item shall constitute failure for the entire sample.

8.4.14.9 Testing shall be performed as specified in 8.4.2 through 8.4.7. Thermal shrinkage shall not be measured.

8.4.15 Specific Testing Requirements for Protective Goggles.

8.4.15.1 Three separate goggles per model shall be tested.

8.4.15.2 Conditioning shall be performed as specified in 8.1.1.

8.4.15.3 Each test shall be performed on a new cap-style NFPA 1977–compliant helmet. The goggles shall be mounted above the brim of the helmet with the goggles to the front and the retention strap around the crown of the helmet. The helmet shall be securely mounted on a room-temperature nonmetallic headform in the "as worn" position.

8.4.15.4 The goggles mounted on the helmet and on the headform shall be placed in the center of the oven. The goggles shall face the airflow.

8.4.15.5 The test oven shall have minimum internal dimensions of 455 mm × 455 mm × 455 mm (18 in. × 18 in. × 18 in.).

8.4.15.6 The test oven shall be heated and the test thermocouple stabilized at 177°C, +6°/–0°C (350°F, +10°/–0°F) for a minimum of 30 minutes.

8.4.15.7 Immediately after the oven exposure at 177°C, +6°/–0°C (350°F, +10°/–0°F) for 5 minutes, +15/–0 seconds, the goggles mounted on the helmet shall be removed from the oven and examined for melting, ignition, or dripping and their position on the helmet.

8.4.15.8 The specimens shall then be allowed to cool for a minimum of 5 minutes following removal from the oven and examined for separation of the lens from the frame. Any separation of the lens from the frame shall be reported as a failure and shall constitute failure for the sample.

8.4.15.9 The cooled goggles and helmet shall then be placed on a CSA Adult or Alderson 50 percentile headform.

8.4.15.10 The goggles shall be positioned on the headform in the "as worn" position over the eyes. The retention strap of the goggles shall be tightened to secure the goggles to the headform per the adjustment instructions provided by the manufacturer. After an additional 5 minutes, the goggles shall be examined to determine if they remain in the original "as worn" position over the eyes of the headform.

8.4.15.11 A test subject with 20/20 vision or vision corrected to 20/20 vision shall then don the helmet with goggles. The test subject shall place the goggles in the "as worn" position to test for optical distortion. In a room illuminated to 100 to 150 foot-candles, the test subject shall read a standard eye chart at a distance of 6.1 m (20 ft), with each eye and through the center viewing area of each lens, to determine optical clarity.

Copyright National Fire Protection Association
Provided by IHS under license with NFPA
No reproduction or networking permitted without license from IHS
Not for Resale

The inability of the test subject to read the eye chart to a visual acuity level of 20/100 with each eye shall constitute failure of the sample.

8.4.15.12 Testing shall be performed as specified in 8.4.2 through 8.4.7. Thermal shrinkage shall not be measured.

8.4.15.13 For goggles, observations of ignition, melting, dripping, or separation shall be recorded and reported for each specimen.

8.4.16 Specific Testing Requirements for Chain Saw Protectors.

8.4.16.1 Each material and hardware item used in the construction of chain saw protectors shall be tested.

8.4.16.2 Conditioning shall be performed as specified in 8.1.1.

8.4.16.3 The test oven shall be heated and the test thermocouple stabilized at 232°C , +6°/–0°C (450°F, +10°/–0°F) for a minimum of 30 minutes.

8.4.16.4 Immediately after the oven exposure at 232°C, +6°/–0°C (450°F, +10°/–0°F) for 5 minutes, +15/–0 seconds, specimens shall be removed and examined for evidence of ignition, melting, dripping, or separation.

8.4.16.5 Within 5 minutes of removing specimens from the oven, all hardware shall be tested for functionality.

8.4.16.6 The functionality of hardware shall be reported as pass or fail. Failure of any one hardware item shall constitute failure for the entire sample.

8.4.16.7 Testing shall be performed as specified in 8.4.2 through 8.4.7. Thermal shrinkage shall not be measured.

8.5 Total Heat Loss Test.

8.5.1 Application.

8.5.1.1 This test method shall apply to protective garment composites but shall not apply to cold weather outerwear composites.

8.5.2 Specimens.

8.5.2.1 Total heat loss testing shall be conducted on at least three specimens. Specimens shall consist of all the layers of the protective garment composite, with the exception of winter liner, arranged in the order and orientation they are worn.

8.5.3 Sample Preparation.

8.5.3.1 Specimens to be tested shall be conditioned for five laundering cycles as specified in 8.1.2.

8.5.3.2 After conditioning according to 8.5.3.1, samples shall be conditioned at a temperature of 25°C ±7°C (77°F ±12.6°F) and a relative humidity of 65 percent ±5 percent for at least 4 hours.

8.5.4 Apparatus.

8.5.4.1 The test apparatus shall be as specified in ASTM F 1868, *Standard Test Method for Thermal and Evaporative Resistance of Clothing Materials Using a Sweating Hot Plate.*

8.5.5 Procedure.

8.5.5.1 Testing shall be conducted in accordance with ASTM F 1868, *Standard Test Method for Thermal and Evaporative Resistance of Clothing Materials Using a Sweating Hot Plate*, using Part C.

8.5.6 Report.

8.5.6.1 The average intrinsic thermal resistance (R_{ef}) of the sample shall be calculated, recorded, and reported.

8.5.6.2 The average apparent intrinsic evaporative resistance (AR_{ef}) of the sample shall be calculated, recorded, and reported.

8.5.6.3 The average total heat loss (Q_t) of the sample shall be calculated, recorded, and reported.

8.5.7 Interpretation.

8.5.7.1 Pass or fail determination shall be based on the average reported total heat loss measurement of all specimens tested.

8.6 Tear Resistance Test.

8.6.1 Application.

8.6.1.1 This test shall apply to protective garment and face/neck shroud materials. If the protective garment or face/neck shroud is constructed of several separable layers, then all layers, including any supplemental liners, shall be individually tested.

8.6.2 Specimens.

8.6.2.1 A minimum of five specimens in each of the warp, machine, or coarse direction and the filling, cross-machine, or wale direction shall be tested.

8.6.2.2 If the material is non-anisotropic, then 10 specimens shall be tested.

8.6.3 Sample Preparation.

8.6.3.1 Specimens shall be conditioned as specified in 8.1.1.

8.6.3.2 Samples for conditioning shall be at least 1 m (1 yd) square of material.

8.6.4 Procedure.

8.6.4.1 Specimens shall be tested in accordance with ASTM D 1424, *Standard Test Method for the Tear Resistance of Woven Fabrics by Falling Pendulum (Elmendorf) Apparatus.*

8.6.5 Report.

8.6.5.1 The tear resistance of each specimen shall be recorded and reported to the nearest 0.45 N (0.1 lbf) of force.

8.6.5.2 The tear resistance for each direction shall be calculated, recorded, and reported.

8.6.6 Interpretation.

8.6.6.1 Pass or fail performance shall be based on the tear resistance in each direction.

8.6.6.2 Failure in any one direction shall constitute failure for the material.

8.7 Cleaning Shrinkage Resistance Test.

8.7.1 Application.

8.7.1.1 This test method shall apply to protective garment and protective face/neck shroud textiles.

8.7.1.2 Modifications to this test method for testing woven textile materials shall be as specified in 8.7.7.

8.7.1.3 Modifications to this test method for testing knit and stretch woven materials shall be as specified in 8.7.8.

8.7.2 Specimens.

8.7.2.1 Cleaning shrinkage resistance testing shall be conducted on three specimens of each material, and each separable layer of composite material shall be tested separately.

Copyright National Fire Protection Association
Provided by IHS under license with NFPA
No reproduction or networking permitted without license from IHS
Not for Resale

8.7.3 Sample Preparation.

8.7.3.1 Specimens to be tested shall be conditioned as specified in 8.1.1.

8.7.4 Procedure.

8.7.4.1 Specimens shall be tested using five cycles of Machine Cycle I, Wash Temperature IV, and Drying Procedure Aiii of AATCC 135, *Dimensional Changes in Automatic Home Laundering of Woven and Knit Fabrics*.

8.7.4.2 A 1.8 kg, ±0.1 kg (4.0 lb, ±0.2 lb) load shall be used. A laundry bag shall not be used.

8.7.4.3 Specimen marking and measurements shall be conducted in accordance with the procedure specified in AATCC 135, *Dimensional Changes in Automatic Home Laundering of Woven and Knit Fabrics*.

8.7.4.4 Knit fabric specimens shall be pulled to original dimensions and shall be allowed to relax for 1 minute prior to measurement.

8.7.5 Report.

8.7.5.1 The percent change in the width and length dimensions of each specimen shall be calculated, recorded, and reported.

8.7.5.2 Results shall be recorded and reported as the average of all three specimens in each dimension.

8.7.6 Interpretation.

8.7.6.1 The average percent change in both dimensions shall be used to determine pass or fail performance.

8.7.6.2 Failure of either dimension shall constitute failure for the entire sample.

8.7.7 Specific Requirements for Testing Woven Textile Materials.

8.7.7.1 Each specimen shall be 380 mm, ±13 mm (15 in., ±½ in.) square and shall be cut from the fabric to be utilized in the construction of the item.

8.7.7.2 Samples for conditioning shall be at least 1 m (1 yd) square of each material.

8.7.7.3 Testing shall be performed as specified in 8.7.2 through 8.7.6.

8.7.8 Specific Requirements for Testing Knit and Stretch Woven Textile Materials.

8.7.8.1 Other than for wristlets, the dimensions of each specimen shall be 380 mm, ±13 mm (15 in., ±½ in.) square and shall be cut from the fabric to be utilized in the construction of the item.

8.7.8.2 The dimensions of wristlet specimens shall be 115 mm, ±13 mm (4½ in., ±½ in.) square and shall be cut from the wristlet fabric to be utilized in the construction of the clothing item.

8.7.8.3 Samples for conditioning shall include material that is at least 50 mm (2 in.) larger in each of the two required specimen dimensions.

8.7.8.4 Testing shall be performed as specified in 8.7.2 through 8.7.6.

8.8 Seam Breaking Strength Test.

8.8.1 Application.

8.8.1.1 This test shall apply to seams used in protective garments and protective face/neck shrouds.

8.8.2 Specimens.

8.8.2.1 A minimum of five seam specimens representative of the garment shall be tested for each seam type.

8.8.2.2 The five seam specimens shall be straight seams. Seam specimens shall be permitted to be cut from the finished garment or shall be permitted to be prepared by joining two pieces of the garment fabric.

8.8.2.2.1 Where two pieces of woven garment fabric are joined, the woven fabric seam specimen shall be prepared as specified in 8.2.1.2 of ASTM D 1683, *Standard Test Method for Failure in Sewn Seams of Woven Fabrics*, and shall use the same thread, seam type, and stitch type as used in the finished garment.

8.8.2.2.2 Where two pieces of knit or stretch woven garment fabric are joined, the knit fabric seam specimen shall be prepared as specified in 7.2.2 of ASTM D 3940, *Standard Test Method for Bursting Strength (Load) and Elongation of Sewn Seams of Knit or Woven Stretch Textile Fabrics*, using the same thread, seam type, and stitch type as used in the finished garment.

8.8.2.2.3 Specimens of garment seam assemblies constructed from other than woven or knit textiles shall be prepared as specified in 8.8.2.2.1.

8.8.2.2.4 Where a piece of woven garment fabric and a knit or stretch woven fabric are joined, the seam specimen shall be prepared as specified in 8.2.1.2 of ASTM D 1683, *Standard Test Method for Failure in Sewn Seams of Woven Fabrics*, and shall use the same thread, seam type, and stitch type as used in the finished garment.

8.8.3 Sample Preparation.

8.8.3.1 Samples for conditioning shall be full clothing items or 305 mm (12 in.) or greater lengths of seam with at least 150 mm (6 in.) of material on either side of the seam centerline.

8.8.3.2 Specimens shall be conditioned as specified in 8.1.1.

8.8.4 Procedure.

8.8.4.1 All woven seam assemblies shall be tested in accordance with ASTM D 1683, *Standard Test Method for Failure in Sewn Seams of Woven Fabrics*. The test machine shall be operated at a rate of 305 mm/min (12 in./min).

8.8.4.2 All knit seam assemblies and all stretch woven seam assemblies shall be tested in accordance with ASTM D 3940, *Standard Test Method for Bursting Strength (Load) and Elongation of Sewn Seams of Knit or Woven Stretch Textile Fabrics*.

8.8.4.3 Combination woven and knit or stretch woven seam assemblies shall be tested in accordance with ASTM D 1683, *Standard Test Method for Failure in Sewn Seams of Woven Fabrics*. The test machine shall be operated at a rate of 305 mm/min (12 in./min).

8.8.5 Report.

8.8.5.1 The seam breaking strength for each seam specimen shall be recorded and reported.

8.8.5.2 The average seam breaking strength for each seam type shall be calculated, recorded, and reported.

8.8.5.3 The type of seams tested shall be recorded and reported as to whether the specimens were cut from the finished garment or prepared from fabric samples.

Copyright National Fire Protection Association
Provided by IHS under license with NFPA
No reproduction or networking permitted without license from IHS
Not for Resale

8.8.6 Interpretation.

8.8.6.1 The average seam breaking strength for each seam type shall be used to determine pass or fail performance.

8.9 Thread Heat Resistance Test.

8.9.1 Application.

8.9.1.1 This test method shall apply to each type of thread used in the construction of garments, helmets, gloves, footwear, face/neck shrouds, goggles, chain saw protectors, and load carrying equipment.

8.9.1.2 Modifications to this test method for testing thread for use on goggles, chain saw protectors, and load carrying equipment shall be as specified in 8.9.5.4.

8.9.2 Specimens. A total of three different specimens of each thread type shall be tested.

8.9.3 Sample Preparation.

8.9.3.1 Samples for conditioning shall be 150 mm (6 in.) or greater in length.

8.9.3.2 All samples shall be conditioned as specified in 8.1.1 prior to testing.

8.9.4 Apparatus.

8.9.4.1* An electrically heated stage, having a circular depression large enough to insert a micro cover glass shall be used. The stage shall have a variable transformer controlling the rate of heat input into the stage.

8.9.4.2 The following equipment shall also be used:

(1) Armored stem thermometer with a range of 150°C to 300°C, accurate to 1°C
(2) A low-powered magnifying glass
(3) Two micro cover glasses
(4) Spatula, pick needle, or other instrument for applying pressure to the cover glasses.
(5) Soxhlet extraction apparatus

8.9.4.3 The following reagents and reference materials shall be used:

(1) Chloroform, USP
(2)*U.S. Pharmacopeia reference standards for melting point calibration of the apparatus

8.9.5 Procedure.

8.9.5.1 The sample shall be extracted with chloroform for a minimum of 20 extractions in a Soxhlet extractor and dried. The specimen shall then be cut into lengths of 2 mm (1⁄16 in.) or less to serve as the specimens for testing.

8.9.5.2 The apparatus shall be calibrated by determining the melting point of a pure material of known melting point. The melting point of the pure material shall be 500°C, ±20°C (932°F, ±68°F). The value obtained shall agree within 1°C of the known value of the reference material.

8.9.5.3 The specific requirements of 8.9.5.3.1 through 8.9.5.3.3 shall apply to testing thread for use on garments, helmets, gloves, footwear, and face/neck shrouds.

8.9.5.3.1 Following each successive determination of melting temperature for the reference material and for the test specimens, the stage in each case shall be cooled to at least 232°C (450°F) before a new specimen is placed for testing.

8.9.5.3.2 The specimen shall be placed in a small mound on the cover glass and covered with another cover glass. The two cover glasses shall be pressed together and placed in the circular depression on the stage. The temperature of the stage shall be raised to within 250°C (485°F) and thereafter raised at a rate of 2°C to 3°C (3°F to 4°F) per minute. At this rate of temperature rise, a slight pressure shall be applied on the upper glass cover by pressing with a spatula, pick needle, or other instrument, so that the complete fiber is in contact with the cover plate.

8.9.5.3.3 When the temperature of the stage reaches 260°C, +3°/–0°C (500°F, +5°/–0°F), the specimen shall be observed with the aid of the magnifying glass for ignition, melting, or charring.

8.9.5.4 The specific requirements of 8.9.5.4.1 through 8.9.5.4.3 shall apply to testing thread for use on goggles, chain saw protectors, and load carrying equipment.

8.9.5.4.1 Following each successive determination of melting temperature for the reference material and for the test specimens, the stage in each case shall be cooled to at least 204°C (400°F) before a new specimen is placed for testing.

8.9.5.4.2 The specimen shall be placed in a small mound on the cover glass and covered with another cover glass. The two cover glasses shall be pressed together and placed in the circular depression on the stage. The temperature of the stage shall be raised to within 225°C (435°F) and thereafter raised at a rate of 2°C to 3°C (3°F to 4°F) per minute. At this rate of temperature rise, a slight pressure shall be applied on the upper glass cover by pressing with a spatula, pick needle, or other instrument, so that the complete fiber is in contact with the cover plate.

8.9.5.4.3 When the temperature of the stage reaches 232°C, +3°/–0°C (450°F, ±0°F), the specimen shall be observed with the aid of the magnifying glass for ignition, melting, or charring.

8.9.6 Report. Observations of ignition, melting, and charring shall be recorded and reported for each specimen.

8.9.7 Interpretation. Any specimen showing ignition, melting, or charring shall constitute failure of the sample.

8.10 Burst Strength Test.

8.10.1 Application. This test shall apply to knit materials used in protective garments and face/neck shrouds.

8.10.2 Specimens. A total of 10 specimens shall be tested.

8.10.3 Sample Preparation.

8.10.3.1 Specimens shall be conditioned as specified in 8.1.1.

8.10.3.2 Samples for conditioning shall be 1 m (1 yd) square of material.

8.10.4 Procedure. Specimens shall be tested as specified in ASTM D 3787, *Standard Test Method for Bursting Strength of Textiles — Constant Rate-of-Traverse (CRT) Ball Burst Test.*

8.10.5 Report.

8.10.5.1 The burst strength of each specimen shall be recorded and reported.

8.10.5.2 The average burst strength of all specimens shall be calculated, recorded, and reported.

8.10.6 Interpretation. The average burst strength shall be used to determine pass or fail performance.

--`,,,```-`-`,,`,,`,`,,`---
Copyright National Fire Protection Association
Provided by IHS under license with NFPA
No reproduction or networking permitted without license from IHS
Not for Resale

8.11 Top Impact Resistance Test (Force) After Radiant Conditioning.

8.11.1 Application.

8.11.1.1 This test shall apply to complete protective helmets.

8.11.2 Specimens.

8.11.2.1 Specimens shall be five helmets of each different style or model.

8.11.3 Sample Preparation.

8.11.3.1 Samples for conditioning shall be complete helmets.

8.11.3.2 Specimens shall be conditioned for the environmental condition specified in 8.1.4 prior to each impact.

8.11.4 Apparatus.

8.11.4.1 The apparatus shall be as specified in ANSI Z89.1, *Protective Headwear for Industrial Workers*.

8.11.5 Procedure. Testing shall be conducted in accordance with ANSI Z89.1, *Protective Headwear for Industrial Workers*.

8.11.6 Report.

8.11.6.1 The results of each system verification shall be recorded and reported and shall be made part of the test results for specimens being tested.

8.11.6.2 The peak force and impact velocity shall be recorded and reported for each test.

8.11.7 Interpretation.

8.11.7.1 Pass or fail performance shall be determined for each specimen.

8.11.7.2 Disengagement of, deformation of, or damage to the helmet shell or component parts shall not in itself constitute a failure.

8.11.7.3 One or more helmet specimens failing this test shall constitute failing performance.

8.12 Helmet Physical Penetration Resistance Test After Radiant Conditioning.

8.12.1 Application.

8.12.1.1 This test method shall apply to protective helmets.

8.12.2 Specimens.

8.12.2.1 Specimens shall be five helmets of each different style or model.

8.12.3 Sample Preparation.

8.12.3.1 Samples for conditioning shall be complete helmets.

8.12.3.2 Specimens shall be conditioned for the environmental condition specified in 8.1.4 prior to each physical penetration.

8.12.4 Apparatus. The apparatus shall be as specified in ANSI Z89.1, *Protective Headwear for Industrial Workers*.

8.12.5 Procedure. Testing shall be conducted in accordance with ANSI Z89.1, *Protective Headwear for Industrial Workers*.

8.12.6 Report.

8.12.6.1 The pass or fail result for each helmet shall be recorded and reported.

8.12.7 Criteria.

8.12.7.1 One or more helmet specimens failing this test shall constitute failing performance.

8.13 Helmet Antiglare Flammability Test.

8.13.1 Application.

8.13.1.1 This test method shall apply to protective helmets and antiglare material on helmets, where provided as permitted in 6.2.7.

8.13.2 Specimens.

8.13.2.1 A minimum of three complete helmets shall be tested.

8.13.3 Sample Preparation.

8.13.3.1 Specimens shall be conditioned as specified in 8.1.1.

8.13.4 Apparatus.

8.13.4.1 A standard Bunsen burner shall be used.

8.13.4.1.1 The Bunsen burner shall be fueled by a bottled methane gas, lab grade or better, of 3.72×10^7 J/m^3, $\pm 1.8 \times 10^6$ J/m^3 (1000 Btu/ft^3, ±50 Btu/ft^3).

8.13.4.1.2 A control valve system with a delivery rate designed to furnish gas to the burner under a pressure of 3.5 kPa, +0.7/−0 kPa (0.5 psi, +0.1/−0.0 psi) at the burner shall be utilized.

8.13.4.1.3 The barrel of the Bunsen burner shall be 13 mm, ±3 mm (½ in., ±⅛ in.) in diameter. A flame spreader shall not be used.

8.13.4.1.4 The Bunsen burner shall be adjusted to produce a 50 mm (2 in.) blue flame with a 25 mm (1 in.) inner cone.

8.13.4.2 Other apparatus equipment shall include a laboratory test stand, fume hood, and stopwatch.

8.13.5 Procedure.

8.13.5.1 The specimen shall be attached to the laboratory test stand so that it is held in the "as worn" position.

8.13.5.2 The stand and specimen shall be placed in a draft-free fume hood.

8.13.5.3 The flame of the Bunsen burner shall be applied so that the tip of the inner cone is at the helmet surface, ±5 mm (±3⁄16 in.) at any point under the peak or front of the brim, and 13 mm, ±3 mm (½ in., ±⅛ in.) from the edge of the peak or brim.

8.13.5.4 The flame shall be applied to the test surface for 5 seconds, +1/−0 second.

8.13.5.5 After removal of the flame, any afterflame shall be measured.

8.13.6 Report.

8.13.6.1 Afterflame times shall be recorded and reported for each specimen at each flame impingement location.

8.13.6.2 The afterflame times shall be recorded and reported to the nearest 0.5 second.

8.13.7 Interpretation.

8.13.7.1 Pass or fail performance shall be based on the longest measured afterflame time for each procedure.

Copyright National Fire Protection Association
Provided by IHS under license with NFPA
No reproduction or networking permitted without license from IHS
Not for Resale

8.14 Flame Resistance Test for Protective Footwear.

8.14.1 Application. This test method shall apply to protective footwear.

8.14.2 Specimens. Three complete footwear items shall be tested.

8.14.3 Sample Preparation.

8.14.3.1 Samples for conditioning shall be whole boots.

8.14.3.2 Specimens shall be conditioned as specified in 8.1.1.

8.14.4 Apparatus.

8.14.4.1 The test apparatus shall consist of a burner, crucible tongs, support stand, utility clamp, stopwatch, butane gas, gas regulator valve system, and measuring scale.

(1) The burner shall be a high-temperature, liquefied-type Fisher burner.
(2) The stopwatch or other timing device shall measure the burning time to the nearest 0.1 second.
(3) The butane shall be of commercial grade, 99.0 percent pure or better.
(4) The gas regulator system shall consist of a control valve system with a delivery rate designed to furnish gas to the burner under a pressure of 17.3 kPa, ±1.7 kPa (2.5 psi, ±0.25 psi) at the reducing valve. The flame height shall be adjusted at the reducing valve to produce a pressure of 0.7 kPa, ±0.07 kPa (0.1 psi, ±0.01 psi).

8.14.4.2 A freestanding flame height indicator shall be used to assist in adjusting the burner flame height. The indicator shall mark a flame height of 75 mm (3 in.) above the top of the burner.

8.14.4.3 A specimen support assembly shall be used to support the footwear specimen above the burner flame.

8.14.5 Procedure.

8.14.5.1 The burner shall be ignited, and the test flame shall be adjusted to a height of 75 mm (3 in.) with the gas on/off valve fully open and the air supply completely and permanently off, so that the flame height is closely controlled.

8.14.5.2 The 75 mm (3 in.) flame height shall be obtained by adjusting the orifice in the bottom of the burner so that the top of the flame is level with the marked flame height indicator.

8.14.5.3 With the specimen mounted in the support assembly, the burner shall be moved so that the flame contacts the specimen at a distance of 38 mm (1½ in.) at the angles in the areas shown in Figure 8.14.5.3.

8.14.5.4 The burner flame shall be applied to the specimen for 12 seconds. After 12 seconds, the burner shall be removed.

8.14.5.5 The afterflame time shall be measured as the time, in seconds to the nearest 0.2 second, that the specimen continues to flame after the burner is removed from the flame.

8.14.5.6 Following the flame exposure, the specimen shall be removed and examined for burn-through.

8.14.5.7 Each layer of the specimen shall be examined for melting or dripping.

8.14.6 Report.

8.14.6.1 The afterflame time shall be recorded and reported for each specimen.

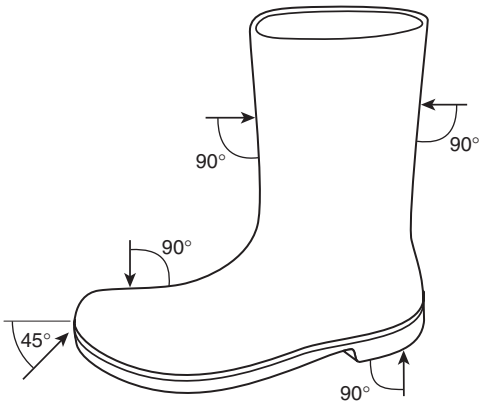

FIGURE 8.14.5.3 Test Areas.

8.14.6.2 The afterflame time shall be reported to the nearest 0.2 second.

8.14.6.3 Observations of burn-through, melting, or dripping for each specimen shall be reported.

8.14.7 Interpretation. Pass or fail performance shall be based on afterflame time and any observed burn-through, melting, or dripping.

8.15 Suspension System Retention Test.

8.15.1 Application. This test shall apply to protective helmets.

8.15.2 Specimens. Specimens shall be three helmets of each different style or model.

8.15.3 Sample Preparation.

8.15.3.1 Specimens shall be conditioned as specified in 8.1.1.

8.15.3.2 Samples for conditioning shall be whole helmets.

8.15.4 Apparatus.

8.15.4.1 The suspension system retention test fixtures shall consist of rigid material of sufficient thickness to facilitate firm attachment of the inverted helmet to the tensile test machine, as shown in Figure 8.15.4.1.

8.15.4.2 The calibrated tensile test machine shall be capable of measuring the force applied to the retention system within 2 percent at the specified forces.

8.15.5 Procedure.

8.15.5.1 Each helmet suspension strap shall be cut such that sufficient length of strap remains to be gripped by the movable jaw of the testing machine.

8.15.5.2 Specimens shall be positioned and secured in the tensile testing machine so that the helmet's reference plane is horizontal.

8.15.5.3 Each attachment point of the crown strap shall be tested by applying a pull force along the centerline of the suspension strap, perpendicular to the reference plane to a maximum load of 23 N, +1/–0 N (5 lbf, +0.25/–0 lbf). The force shall be increased from 0 N to 23 N, ±5 N (0 lbf to 5 lbf, ±0.25 lbf) at a load rate of 25 mm/min, ±5 mm/min (1 in. ±3⁄16 in./min).

Copyright National Fire Protection Association
Provided by IHS under license with NFPA
No reproduction or networking permitted without license from IHS
Not for Resale

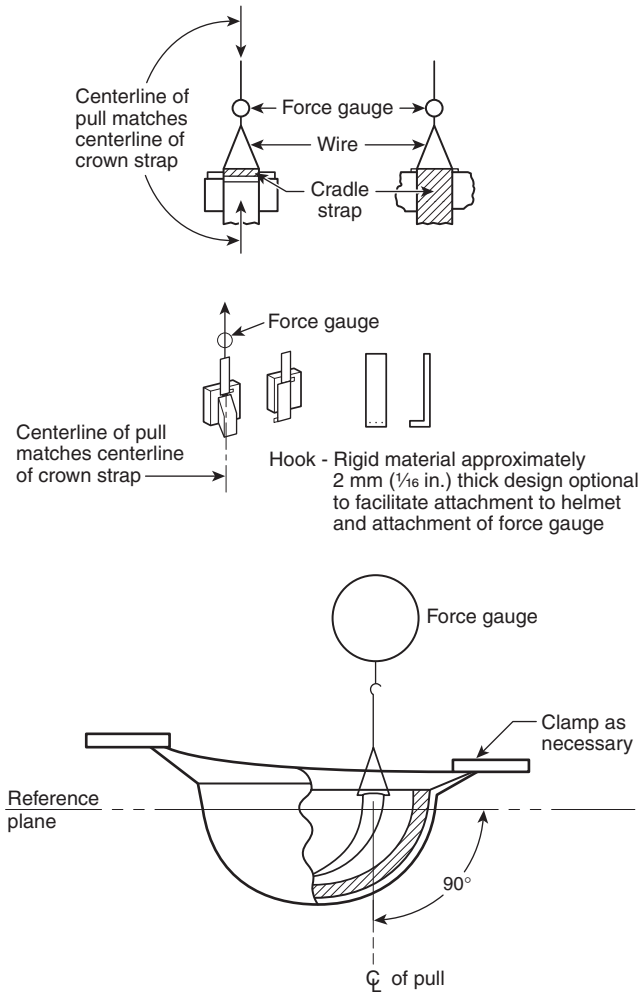

FIGURE 8.15.4.1 Suspension System Retention Test Setup.

8.15.5.4 After application of the force is complete, the load shall be released and the suspension system shall be inspected for any separation from the helmet shell.

8.15.5.5 Each adjusting mechanism of the helmet suspension system assembly shall be secured and unsecured, as applicable, for 20 repetitions.

8.15.6 Report.

8.15.6.1 The individual pass or fail results for each attachment point shall be recorded and reported.

8.15.6.2 Each adjusting mechanism of the helmet suspension system shall be observed for proper functioning to determine pass or fail.

8.15.7 Interpretation.

8.15.7.1 Separation of the helmet suspension from the helmet shall constitute failing performance.

8.15.7.2 One or more helmet specimens failing this test shall constitute failing performance.

8.16 Retroreflectivity and Fluorescence Test.

8.16.1 Application.

8.16.1.1 This test method shall apply to all garment, load carrying equipment, and helmet trim materials.

8.16.2 Specimens.

8.16.2.1 A minimum of three trim test specimens shall be tested.

8.16.2.2 Each trim test specimen shall consist of a 100 mm (4 in.) square composite made up of multiple strips of the finished trim product. Where retroreflective and nonretroreflective surface areas are combined to form a trim, the complete finished product consisting of the retroreflective and nonretroreflective portions shall be used to form the composite test specimen.

8.16.3 Sample Preparation.

8.16.3.1 Specimens shall be conditioned as specified in 8.1.1.

8.16.3.2 Samples for conditioning shall include 305 mm (12 in.) long sections of trim that are sewn onto ballast material that meets the requirements of AATCC 135, *Dimensional Changes in Automatic Home Laundering of Woven and Knit Fabrics*.

8.16.4 Procedures.

8.16.4.1 Measurement of Coefficient of Retroreflection.

8.16.4.1.1 The coefficient of retroreflection (R_A) shall be determined in accordance with ASTM E 810, *Standard Test Method for Coefficient of Retroreflection of Retroreflective Sheeting Utilizing the Coplanar Method*, using the following modifications:

(1) Test distance = 15.2 m (50 ft).
(2) Observation angle = 0.2 degree.
(3) Entrance angle = +5.0 degree.
(4) The receiver shall be provided with an entrance aperture of 25 mm (1.024 in.), ±5%, in diameter, which is equivalent to 0.1 degree angular aperture.
(5) The exit aperture of the source shall be circular and 26 mm (1.024 in.), ±5%, in diameter, which corresponds to 0.1 degree angular aperture.
(6) Retroreflector reference angle = 90 degrees.
(7) Datum mark shall be placed as specified by the trim manufacturer.

8.16.4.1.2 Portable and bench retroreflection measuring equipment shall be permitted to be used to determine R_A values, provided the appropriate substitutional standard reference panels, measured in accordance with ASTM E 810, *Standard Test Method for Coefficient of Retroreflection of Retroreflective Sheeting Utilizing the Coplanar Method*, are used. In this case, the methods of Procedure B in ASTM E 809, *Standard Test Method for Measuring Photometric Characteristics of Retroreflectors*, shall apply.

8.16.4.1.3 The coefficient of retroreflection (R_A) shall be calculated by the following equation:

$$R_A = \frac{R_I}{A_r}$$

where:
R_I = coefficient of luminous intensity, measured as specified in 8.16.4.1.1.
A_r = retroreflective surface area of the trim test specimen's surface area. A_r shall be calculated by subtracting the nonretroreflective surface area from the test specimen's total surface area.

8.16.4.2 Evaluation of Fluorescence.

8.16.4.2.1 Specimens of trim used on garments and load carrying equipment shall be evaluated for fluorescence.

Copyright National Fire Protection Association
Provided by IHS under license with NFPA
No reproduction or networking permitted without license from IHS
Not for Resale

8.16.4.2.2 Trim fluorescence shall be determined by measuring the color in accordance with ASTM E 991, *Standard Practice for Color Measurement of Fluorescent Specimens*, ASTM E 2152, *Standard Practice for Computing the Colors of Fluorescent Objects from Bispectral Photometric Data*, and ASTM E 2153, *Standard Practice for Obtaining Bispectral Photometric Data for Evaluation of Fluorescent Color*, using the following test specifications:

(1) A polychromatic illumination of D65
(2) A 45/0 (or 0/45) geometry
(3) A 2° observer
(4) A black underlay with reflectance (luminance) of less than 0.04

8.16.4.2.3 The chromaticity of the trim material shall lie within one of the areas defined in Table 8.16.4.2.3, and the luminance factor shall exceed the corresponding minimum in Table 8.16.4.2.3 in order for the material to be designated fluorescent.

Table 8.16.4.2.3 Color Requirements for Trim

Color	Chromaticity Coordinates		Minimum Luminance Factor, Y
	x	*y*	
Fluorescent yellow-green	0.387	0.610	70
	0.356	0.494	
	0.398	0.452	
	0.460	0.540	
Fluorescent orange-red	0.610	0.390	40
	0.535	0.375	
	0.570	0.340	
	0.655	0.344	
Fluorescent red	0.655	0.344	25
	0.570	0.340	
	0.595	0.315	
	0.690	0.310	

8.16.4.2.4 Specimens that do not meet the chromaticity and luminance factor requirements shall be designated as nonfluorescent.

8.16.4.3 Rainfall Test.

8.16.4.3.1 Specimens of trim shall be tested for retroreflectivity when wet as specified in Annex A of EN 471, *High Visibility Warning Clothing for Professional Use. Test Methods and Requirements*, at a rate of 109 mm/hr (4.3 in./hr).

8.16.4.3.2 The coefficient of retroreflection (R_A) shall be measured as specified in 8.16.4.1, 2 minutes, ±15 seconds, after the rainfall has started.

8.16.4.4 Convective Heat Exposure Test.

8.16.4.4.1 Specimens of trim used on garments and load carrying equipment shall be tested for retroreflectivity and fluorescence after convective heat exposure as specified in 8.1.3.

8.16.4.4.2 Specimens of trim used on helmets shall be tested for retroreflectivity only after the convective heat exposure as specified in 8.4.11.

8.16.4.4.3 The coefficient of retroreflection (R_A) shall be measured as specified in 8.16.4.1.

8.16.5 Report.

8.16.5.1 The coefficient of retroreflection (R_A) shall be recorded and reported for each specimen.

8.16.5.2 The average coefficient of retroreflection (R_A) of all specimens shall be calculated, recorded, and reported separately for each of the test procedures specified in 8.16.4.1, 8.16.4.3, and 8.16.4.4.

8.16.5.3 The number of fluorescent and nonfluorescent specimens shall be recorded and reported separately for each of the test procedures in 8.16.4.2, as applicable.

8.16.6 Interpretation.

8.16.6.1 For trim retroreflectivity, pass or fail performance shall be determined using the average coefficient of retroreflection (R_A) reported for each group of specimens for each of the procedures specified in 8.16.4.1, 8.16.4.3, and 8.16.4.4.

8.16.6.2 For trim fluorescence, any nonfluorescent specimens in any test procedure shall constitute failing performance.

8.17 Retention System Test.

8.17.1 Application. This test shall apply to protective helmets.

8.17.2 Specimens. Specimens shall be three helmets of each different style or model.

8.17.3 Sample Preparation.

8.17.3.1 Samples for conditioning shall be whole helmets.

8.17.3.2 Specimens shall be conditioned as specified in 8.1.1.

8.17.4 Apparatus.

8.17.4.1 An ISO size J headform shall be used.

8.17.4.2 A mechanical chin structure shall be designed for use with a calibrated tensile test machine. The mechanical chin structure shall consist of two rollers 13 mm (½ in.) in diameter with centers that are 75 mm (3 in.) apart. The mechanical chin structure shall conform to Figure 8.17.4.2.

8.17.4.3 The calibrated tensile test machine shall be capable of measuring the force applied to the retention system within 2 percent at the specified forces.

8.17.5 Procedure.

8.17.5.1 The test shall be conducted at an ambient temperature of 20°C to 28°C (68°F to 82°F), and the relative humidity shall be 30 percent to 70 percent.

8.17.5.2 Prior to testing, the test machine shall be allowed to warm up until stability is achieved.

8.17.5.3 The headform and mechanical chin structure shall be positioned so that the vertical straight line distance between the bottom of the rollers and the crown of the headform is 200 mm, ± 10 mm (8 in., ±⅜ in.). The chin strap shall be passed around the rollers, and the helmet shall be secured to the headform. The chin strap shall be adjusted and preloaded to 45 N, ± 5 N (10 lbf, ±1 lbf). The distance between the top of the helmet and the bottom of the rollers shall be measured and recorded to the nearest 0.5 mm (1/64 in.).

8.17.5.4 The load rate shall be 25 mm/min (1 in./min) to a limit of 225 N (50 lbf).

Copyright National Fire Protection Association
Provided by IHS under license with NFPA
No reproduction or networking permitted without license from IHS
Not for Resale

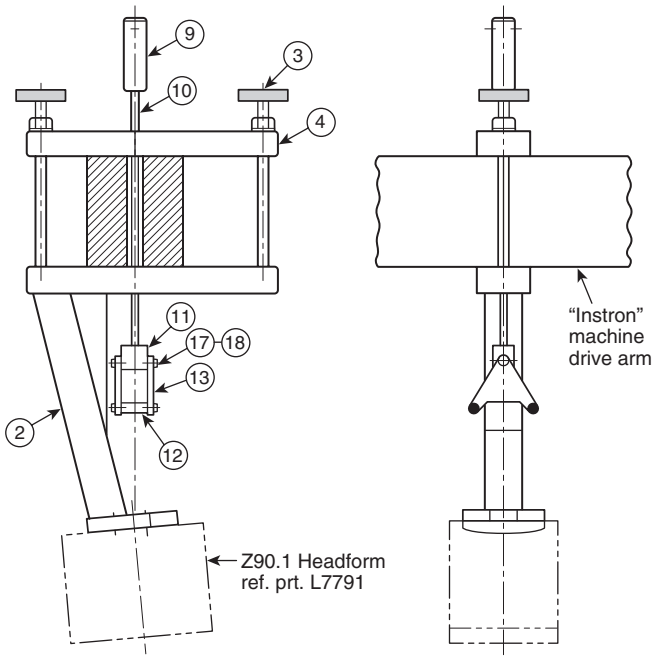

ITEM NO.	PART NO.	SHT. NO.	DESCRIPTION	MAT'L.	VEND. OR STR. SIZE	QTY.
1	L8539	1	Retention Test Fixt. Assy.	—	—	1
2		2	Main Support Assy.	—	—	1
3		2	Knurled Knob Assy.	—	—	2
4		2	Rect. Alum. Bar	6061-T6	1 1/2 x 3 x 14 Lg.	1
5		2	Rect. Alum. Bar	6061-T6	1 1/2 x 3 x 14 Lg.	1
6		2	Alum. Bar	6061-T6	2 x 2 x 7 1/2 Lg.	1
7		2	Alum. Bar	6061-T6	2 x 2 x 12.96 Lg.	1
8		2	Alum. Flat	6061-T6	3/4 x 4 1/2 x 5 Lg.	1
9		2	C.F. Steel Rod	Stl.	1 1/4 Dia. x 4 Lg.	1
10		2	C.F. Steel Rod	Stl.	3/8 Dia. x 22 Lg.	1
11		2	C.F. Steel Flat	Stl.	1 x 1 1/4 x 1 1/2 Lg.	1
12		2	Hollow Steel Tube	Stl.	.500 O.D. .384 I.D. x 1 1/2	2
13		2	C.F. Steel Flat	Stl.	1/4 x 3 1/4 x 3 3/4 Lg.	2
14		2	C.F. Steel Flat	Stl.	39 x 3/4 Thk.	2
15		2	C.F. Steel Rod	Stl.	3/4 ∅ x 10 1/2 Lg.	2
16		2	Hex Nut	Stl.	3/4 - 10 Unc.	2
17		1	Hex Hd. Bolt	Stl.	3/8 - 24 Unf. x 2 1/2 Lg.	3
18		1	Hex Nut	Stl.	3/8 - 24 Unf.	3

Notes:
1. Remove burrs and break sharp edges.
2. All steel parts are to be solvent cleaned and zinc plated 0.0003 to 0.0010 in. thick.
3. Headform is to be bolted in place using a No. 3 socket head cap screws ½–13 UNC × 1½ Lg.

FIGURE 8.17.4.2 Retention System Test Setup.

8.17.5.5 The distance between the top of the helmet and the bottom of the rollers shall be measured and recorded again after the force has been maintained at 225 N (50 lbf) for 60 seconds, +15/–0 seconds. The difference between the second measurement and the first shall be the retention system elongation.

8.17.5.6 In addition, each adjusting mechanism of the helmet chin strap assembly shall be secured and unsecured, as applicable, for 20 repetitions.

8.17.6 Report.

8.17.6.1 The retention system elongation shall be measured, recorded, and reported for each helmet specimen.

8.17.6.2 Each mechanism shall be observed for proper functioning to determine pass or fail.

8.17.7 Interpretation. One or more helmet specimens failing this test shall constitute failing performance.

8.18 Protective Footwear Abrasion Test.

8.18.1 This test shall apply to protective footwear.

8.18.2 Specimens. A minimum of three footwear soles with heels shall be tested.

8.18.3 Sample Preparation.

8.18.3.1 Samples for conditioning shall be complete footwear soles with heel.

8.18.3.2 Specimens shall be conditioned as specified in 8.1.1.

8.18.4 Procedure. Abrasion resistance tests of the footwear soles and heels shall be performed in accordance with ASTM D 1630, *Standard Test Method for Rubber Property — Abrasion Resistance (Footwear Abrader)*.

8.18.5 Report. The abrasion resistance rating of each specimen shall be recorded and reported.

8.18.6 Interpretation. One or more footwear specimens failing this test shall constitute failing performance.

8.19 Goggle and Headlamp Clip Attachment Test.

8.19.1 Application.

8.19.1.1 This test method shall apply to goggle and headlamp clips on protective helmets.

8.19.2 Specimens.

8.19.2.1 A minimum of three helmets with goggle and headlamp clips shall be tested for each test.

8.19.3 Sample Preparation.

8.19.3.1 Specimens shall be conditioned as specified in 8.1.1.

8.19.3.2 Samples for conditioning shall be complete helmets with goggle and headlamp clips in place.

8.19.4 Apparatus.

8.19.4.1 The test fixture shall consist of a 1.4 kg (3 lb) weight attached to a 1 mm (1/32 in.) diameter wire loop.

8.19.5 Procedure.

8.19.5.1 The helmet shall be turned on edge with the clip to be tested facing directly down and supported on the brim except directly beneath the clip, as shown in Figure 8.19.5.1.

8.19.5.2 The wire shall be looped under the clip, and, without allowing any vertical drop, the weight shall be suspended from the clip.

8.19.5.3 After 5 seconds, +2/–0 seconds, with the weight still in place, the clip shall be inspected to determine if it has pulled away from the helmet or deformed more than 6 mm (¼ in.) from its original position, either of which constitutes a failure.

Copyright National Fire Protection Association
Provided by IHS under license with NFPA
No reproduction or networking permitted without license from IHS
Not for Resale

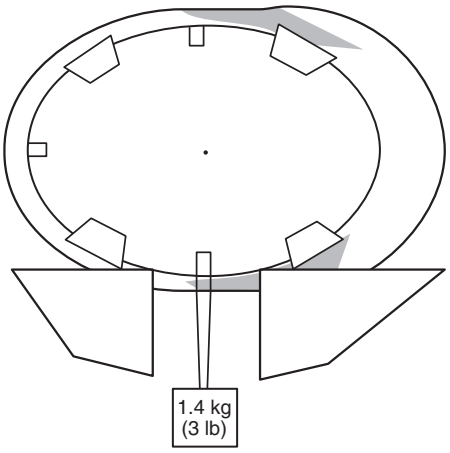

FIGURE 8.19.5.1 Test Setup (side view of top of helmet).

8.19.6 Report. The individual pass or fail results for each specimen and clip shall be recorded and reported.

8.19.7 Interpretation. One or more helmet specimens failing this test shall constitute failing performance.

8.20 Protective Glove Flame Resistance Test.

8.20.1 Application. This test method shall be applied to glove materials.

8.20.2 Specimens.

8.20.2.1 Each specimen to be tested shall be a rectangle at least 50 mm (2 in.) wide by 150 mm (6 in.) long. Specimens shall be the composite used in actual glove construction consisting of each single layer, with all layers arranged in proper order. In each test, the specimen's normal outer surface shall be exposed to the flame.

8.20.2.2 Three specimens shall be tested for each material.

8.20.2.3 If a proposed glove construction has stitched-through seams, three additional specimens containing these seams shall be tested. The seam shall be in the direction of the 150 mm (6 in.) dimension.

8.20.3 Sample Preparation.

8.20.3.1 Specimens shall be tested both before and after being subjected to five laundering cycles as specified in 8.1.2.

8.20.3.2 All specimens to be tested shall be conditioned as specified in 8.1.1.

8.20.3.3 Samples to be conditioned shall be the composite used in actual glove construction consisting of each single layer, with all layers arranged in proper order and stitched along the edges using the same thread as used in the construction of the glove.

8.20.4 Apparatus.

8.20.4.1 The test apparatus shall consist of a burner, crucible tongs, support stand, utility clamp, stopwatch, butane gas, gas regulator valve system, and measuring scale.

8.20.4.1.1 The burner shall be a high-temperature, liquefied-type Fisher burner.

8.20.4.1.2 The stopwatch or other timing device shall measure the burning time to the nearest 0.1 second.

8.20.4.1.3 The butane shall be commercial grade, 99.0 percent pure or better.

8.20.4.1.4 The gas regulator system shall consist of a control valve system with a delivery rate designed to furnish gas to the burner under a pressure of 17.3 kPa, ±1.7 kPa (2.5 psi, ±0.25 psi) at the reducing valve. The flame height shall be adjusted at the reducing valve to produce a pressure of 0.7 kPa, ±0.07 kPa (0.1 psi, ±0.01 psi).

8.20.4.2 A freestanding flame height indicator shall be used to assist in adjustment of the burner flame height. The indicator shall mark a flame height of 75 mm (3 in.) above the top of the burner.

8.20.4.3 A specimen support assembly shall be used that consists of a frame and steel rod of 2 mm (1⁄16 in.) diameter to support the specimen in an L-shaped position, as shown in Figure 8.20.4.3.

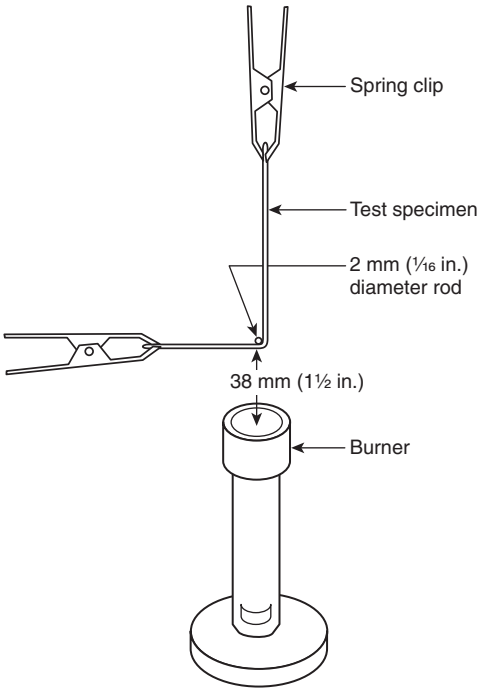

FIGURE 8.20.4.3 Specimen Support Assembly.

8.20.4.4 The horizontal portion of the specimen shall be not less than 50 mm (2 in.), and the vertical portion shall be not less than 150 mm (6 in.). The specimen shall be held at each end by spring clips under light tension, as shown in Figure 8.20.4.3.

8.20.5 Procedure.

8.20.5.1 The burner shall be ignited, and the test flame shall be adjusted to a height of 75 mm (3 in.) with the gas on/off valve fully open and the air supply completely and permanently off, so that the flame height is closely controlled. The 75 mm (3 in.) height shall be obtained by adjusting the orifice in the bottom of the burner so that the top of the flame is level with the marked flame height indicator.

--`,,`,,`-`-`,,`,,`,`,,`---

Copyright National Fire Protection Association
Provided by IHS under license with NFPA
No reproduction or networking permitted without license from IHS
Not for Resale

8.20.5.2 With the specimen mounted in the support assembly, the burner shall be moved such that the middle of the folded corner contacts the flame, as shown in Figure 8.20.4.3.

8.20.5.3 The burner flame shall be applied to the specimen for 12 seconds. After 12 seconds, the burner shall be removed.

8.20.5.4 The afterflame time shall be measured as the time, in seconds, to the nearest 0.2 second, that the specimen continues to flame after the burner is removed from the flame.

8.20.5.5 Each layer of the specimen shall be examined for melting or dripping.

8.20.5.6 The specimen shall then be further examined for char length. The char length shall be determined by measuring the length of the tear through the center of the charred area as specified in 8.20.5.6.1 through 8.20.5.6.4.

8.20.5.6.1 The specimen shall be folded lengthwise and creased, by hand, along a line through the highest peak of the charred area.

8.20.5.6.2 A hook shall be inserted in the specimen or a hole that is 6 mm (¼ in.) in diameter or less that is punched out for the hook, at one side of the charred area 6 mm (¼ in.) from the adjacent outside edge at the point where the specimen contacted the steel rod, and 6 mm (¼ in.) in from the lower end.

8.20.5.6.3 A weight of sufficient size such that the weight and hook together shall equal the total tearing load required in Table 8.20.5.6.3 shall be attached to the hook. The specific load for determining char length applicable to the weight of the composite specimen shall be as listed in Table 8.20.5.6.3.

Table 8.20.5.6.3 Tearing Weights for Determining Charred Lengths

Specified Weight of Material Before Any Fire-Retardant Treatment or Coating		Total Tearing Weight for Determining Charred Length	
g/m^2	oz/yd^2	kg	lb
68–203	2.0–6.0	0.1	0.25
Over 203–508	Over 6.0–15.0	0.2	0.5
Over 508–780	Over 15.0–23.0	0.3	0.75
Over 780	Over 23.0	0.45	1.0

8.20.5.6.4 A tearing force shall be applied gently to the specimen by grasping the side of the material at the edge of the char opposite from the load and raising the specimen and weight clear of the supporting surface. The end of the tear shall be marked off on the edge, and the char length measurement shall be made along the undamaged edge.

8.20.6 Report.

8.20.6.1 The afterflame time and char length shall be recorded and reported for each specimen.

8.20.6.2 The average afterflame time and char length shall be calculated, recorded, and reported.

8.20.6.3 The afterflame time shall be recorded and reported to the nearest 0.2 second, and the char length shall be recorded and reported to the nearest 2.5 mm (1/10 in.).

8.20.6.4 Observations of melting or dripping for each specimen shall be recorded and reported.

8.20.7 Interpretation. Pass or fail performance shall be based on any observed hole formation, melting or dripping, the average afterflame time, and the average char length.

8.21 Conductive Heat Resistance Test.

8.21.1 Application.

8.21.1.1 This test method shall apply to protective glove materials.

8.21.2 Specimens.

8.21.2.1 A total of three specimens shall be tested.

8.21.2.2 Specimens shall be representative of glove body composite construction at the palm of the hand and at the palm side of the fingers.

8.21.2.3 Specimens shall be stitched around the perimeter using the same thread used in glove construction.

8.21.3 Sample Preparation.

8.21.3.1 Specimens shall be tested both before and after being subjected to laundering cycles as specified in 8.1.2.

8.21.4 Procedure.

8.21.4.1 Specimens shall be tested in accordance with ASTM F 1060, *Standard Test Method for Thermal Protective Performance of Materials for Protective Clothing for Hot Surface Contact*, with the following modifications:

(1) Specimens shall be tested using an exposure temperature of 280°C (536°F). The pressure applied during the test shall be 3 kPa (0.5 psi).
(2) The time in seconds to pain and to second-degree burn (blister) as predicted by the Stoll Human Tissue Burn Tolerance Criteria shall be recorded and reported.
(3) The time to thermal end point shall be determined graphically from the recorder chart of the sensor response and the criterion overlay prepared according to paragraph 10.5 of ASTM F 1060, *Standard Test Method for Thermal Protective Performance of Materials for Protective Clothing for Hot Surface Contact.*
    (a) The overlay shall be positioned on the recorder chart, matching the zero of the overlay with the point on the recorder chart corresponding to the time at which the sensor and specimen were placed in direct contact with the hot plate.
    (b) The horizontal (time) axis shall be placed in line with the initial trace of the pen.
    (c) The overlay shall be kept square with the recorder chart.
    (d) Exposure time shall be read to the nearest 0.1 second from the overlay chart at the point where the sensor response and the tissue tolerance curves cross.

8.21.5 Report.

8.21.5.1 The time to pain and time to second-degree burn for each specimen shall be recorded and reported.

8.21.5.2 The average time to pain and time to second-degree burn shall be calculated, recorded, and reported.

Copyright National Fire Protection Association
Provided by IHS under license with NFPA
No reproduction or networking permitted without license from IHS
Not for Resale

8.21.5.3 If the time to pain or time to second-degree burn is greater than 30 seconds, then the time to pain or time to second-degree burn shall be recorded and reported as ">30 seconds" for the time to pain and ">30 seconds" for time to second-degree burn.

8.21.6 Interpretation.

8.21.6.1 Pass or fail determinations shall be based on the time to pain and time to second-degree burn of all specimens tested.

8.21.6.2 If an individual result from any test set varies more than ±8 percent from the other individual results of that test series, the results from the test series shall be discarded and another set of specimens shall be tested.

8.22 Thermal Protective Performance Test.

8.22.1 Application. This test method shall apply to protective glove materials.

8.22.2 Specimens.

8.22.2.1 Thermal protective performance (TPP) testing shall be conducted on three specimens.

8.22.2.2 Specimens for testing shall consist of the composite used in the actual glove construction, with the layers arranged in proper order. Specimens shall not include seams where multiple layers are involved. Specimens shall not be stitched to hold individual layers together during testing.

8.22.2.3 Samples for conditioning shall include glove material that is a minimum of 150 mm, ±6 mm (6 in., ±¼ in.) square with the long dimension in the warp or wale direction, consisting of the composite used in the actual glove construction, with the layers arranged in proper order and stitched using the same thread used in the construction of the glove.

8.22.3 Sample Preparation. Specimens shall be tested after being subjected to five laundering cycles as specified in 8.1.2 followed by conditioning as specified in 8.1.1.

8.22.4 Apparatus. The test apparatus specified in ISO 17492, *Clothing for protection against heat and flame — determination of heat transmission on exposure to both flame and radiant heat.*

8.22.5 Procedure. Thermal protective performance testing shall be performed in accordance with ISO 17492, *Clothing for protection against heat and flame — determination of heat transmission on exposure to both flame and radiant heat*, and shall be used with the following modifications:

(1) An exposure heat flux of 84 kW/m^2 (2.0 cal/cm^2s) shall be used.
(2) The contact configuration shall be used for testing of all material specimens.
(3) The thermal threshold index analysis method shall be used with calculations made using the heat flux in calories per square centimeter per second and reported as the TPP rating.
(4) T-150 quartz tubes shall be used.

8.22.6 Report.

8.22.6.1 The individual test TPP rating of each specimen shall be recorded and reported.

8.22.6.2 The average TPP rating shall be calculated, recorded, and reported.

8.22.6.3 Where a TPP rating is greater than 60, then the TPP rating shall be recorded and reported as ">60."

8.22.7 Interpretation.

8.22.7.1 Pass or fail determinations shall be separately based on the average reported TPP rating of all specimens.

8.22.7.2 If an individual result from any test set varies more than ±10 percent from the average result, the results from the test set shall be discarded and another set of specimens shall be tested.

8.23 Cut Resistance Test.

8.23.1 Application.

8.23.1.1 This test method shall apply to protective gloves and footwear uppers.

8.23.1.2 Modifications to this test method for evaluation of protective gloves shall be as specified in 8.23.7.

8.23.1.3 Modifications to this test method for evaluation of protective footwear upper materials shall be as specified in 8.23.8.

8.23.2 Specimens.

8.23.2.1 A minimum of three specimens shall be tested.

8.23.3 Sample Preparation.

8.23.3.1 Samples for conditioning shall be whole gloves or footwear uppers.

8.23.3.2 Specimens shall be tested after conditioning as specified in 8.1.1.

8.23.4 Procedure.

8.23.4.1 Specimens shall be evaluated in accordance with ASTM F 1790, *Standard Test Method for Measuring Cut Resistance of Materials Used in Protective Clothing*, as modified by 8.23.7 and 8.23.8.

8.23.5 Report.

8.23.5.1 The distance of blade travel shall be recorded and reported to the nearest 1 mm (1/32 in.) for each sample specimen.

8.23.5.2 The average distance of blade travel in millimeters (inches) shall be calculated, recorded, and reported for all specimens tested.

8.23.6 Interpretation.

8.23.6.1 The average cut force shall be used to determine pass or fail performance.

8.23.7 Specific Requirements for Testing Gloves.

8.23.7.1 Samples for conditioning shall be whole gloves.

8.23.7.2 Specimens shall be taken from the back and palm of the glove and shall not include seams.

8.23.7.3 Cut resistance shall be performed under a load of 200 g (7 oz).

8.23.8 Specific Requirements for Testing Footwear Uppers.

8.23.8.1 Samples for conditioning shall be whole footwear items.

Copyright National Fire Protection Association
Provided by IHS under license with NFPA
No reproduction or networking permitted without license from IHS
Not for Resale

8.23.8.2 Specimens shall be taken from the parts of the footwear upper that provides uniform thickness, and shall not include seams.

8.23.8.3 Cut resistance shall be performed under a load of 400 g (14 oz).

8.24 Puncture Resistance Test.

8.24.1 Application.

8.24.1.1 This test method shall apply to protective gloves and footwear uppers.

8.24.1.2 Modifications to this test method for testing protective gloves shall be as specified in 8.24.7.

8.24.1.3 Modifications to this test method for testing footwear uppers shall be as specified in 8.24.8.

8.24.2 Specimens.

8.24.2.1 A minimum of three specimens measuring at least 150 mm (6 in.) square shall be tested.

8.24.3 Specimen Preparation.

8.24.3.1 Specimens shall be tested after conditioning as specified in 8.1.1.

8.24.4 Procedure.

8.24.4.1 All specimens shall be tested in accordance with ASTM F 1342, *Standard Test Method for Protective Clothing Material Resistance to Puncture.*

8.24.5 Report. The puncture force in newtons (poundforce) shall be recorded and reported for each specimen.

8.24.6 Interpretation.

8.24.6.1 The puncture force of each specimen shall be evaluated to determine pass or fail.

8.24.6.2 Any one puncture failing this test shall constitute failing performance.

8.24.7 Specific Requirements for Testing Gloves.

8.24.7.1 Specimens shall consist of each composite of the palm, palm side of the fingers, and back of the glove used in the actual glove construction, with the layers arranged in proper order. Where the specimen composites of the palm, palm side of the fingers, and back of the glove are identical, only one representative composite shall be required to be tested.

8.24.7.2 Testing shall be performed as specified in 8.24.2 through 8.24.6.

8.24.8 Specific Requirements for Testing Footwear Uppers.

8.24.8.1 Specimens shall consist of each composite of footwear item used in the actual footwear construction, with the layers arranged in proper order. Specimens shall be taken from the thinnest portion of the footwear upper.

8.24.8.2 Testing shall be performed as specified in 8.24.2 through 8.24.6.

8.25 Dexterity Test.

8.25.1 Application. This test shall apply to gloves.

8.25.2 Specimens.

8.25.2.1 A minimum of three glove pairs each for size small and size large shall be used for testing.

8.25.2.2 Each glove pair shall be tested as a complete set of gloves in new, "as distributed" condition.

8.25.2.3 Glove pair specimens shall not receive special softening treatments prior to tests.

8.25.3 Sample Preparation.

8.25.3.1 Glove pair specimens shall be preconditioned for five laundering cycles as specified in 8.1.2.

8.25.3.2 Samples for conditioning shall be whole glove pairs.

8.25.4 Apparatus. The test apparatus shall be as specified in ASTM F 2010, *Standard Test Method for Evaluation of Glove Effects on Wearer Hand Dexterity Using Modified Pegboard Test.*

8.25.5 Procedures. Testing shall be conducted in accordance with ASTM F 2010, *Standard Test Method for Evaluation of Glove Effects on Wearer Hand Dexterity Using Modified Pegboard Test.*

8.25.6 Report.

8.25.6.1 The average percent of bare-handed control shall be recorded and reported for each test subject.

8.25.6.2 The average percent of bare-handed control for all test subjects shall be calculated, recorded, and reported.

8.25.7 Interpretation. The average percent of bare-handed control shall be used to determine pass or fail performance.

8.26 Grip Test.

8.26.1 Application. This test method shall apply to protective gloves.

8.26.2 Specimens.

8.26.2.1 A minimum of three glove pairs each for size small and size large shall be used for testing.

8.26.2.2 Each sample glove pair shall be tested as a complete set of gloves in new, "as distributed" condition.

8.26.2.3 Sample glove pairs shall not receive special softening treatments prior to tests.

8.26.2.4 Sample glove pairs shall be tested for each material and construction combination.

8.26.3 Sample Preparation.

8.26.3.1 Samples for conditioning shall be whole gloves.

8.26.3.2 Specimen glove pairs shall be preconditioned for five laundering cycles as specified in 8.1.2.

8.26.3.3 Specimen glove pairs shall be tested after being conditioned as specified in 8.1.1.

8.26.4 Apparatus. Grip testing shall be evaluated with the use of a 10 mm (⅜ in.) diameter, three-strand, prestretched polyester rope attached to a calibrated force measuring device.

8.26.5 Procedure.

8.26.5.1 Test subjects shall be selected such that their hand dimensions are as close as possible to those specified in Table 6.3.4.4.

8.26.5.2 Each test subject shall make three successive attempts to lift as much weight using the halyard as possible, using both hands and keeping both feet firmly planted on the ground. The average weight hoisted over the three trials shall be the bare-handed weight-lift capability.

Copyright National Fire Protection Association
Provided by IHS under license with NFPA
No reproduction or networking permitted without license from IHS
Not for Resale

8.26.5.3 Conditioned sample gloves shall be tested on a dry rope and then on a wet rope.

8.26.5.4 Each test subject shall test a minimum of three pairs of sample gloves. Test subjects shall attempt one trial with each pair of gloves for a minimum of six grip tests for each set of conditions, with at least three grip tests with size small gloves and three grip tests with size large gloves.

8.26.5.5 Weight-pulling capacity with gloves shall be compared with bare-handed weight-lift capability. The percentage of weight-pulling capacity with gloves to bare-handed weight-lift capability shall be calculated as follows:

$$\frac{WPC_g}{WLC_b}(100) = \text{Percentage of bare-handed control}$$

where:
WPC_g = weight-pulling capacity with gloves
WLC_b = bare-handed weight-lift capability

8.26.6 Report. The percentage of bare-handed control shall be recorded and reported for each sample glove pair, condition, and test subject tested.

8.26.7 Interpretation. One or more glove pairs failing this test shall constitute failing performance.

8.27 Corrosion Resistance Test.

8.27.1 Application. This test method shall apply to hardware items on protective footwear.

8.27.2 Specimens. A total of five different items of each hardware type shall be tested.

8.27.3 Sample Preparation. Specimens shall be conditioned as specified in 8.1.1.

8.27.4 Procedure.

8.27.4.1 Specimens shall be tested in accordance with ASTM B 117, *Standard Practice for Operating Salt Spray (Fog) Apparatus*. Salt spray shall be 5 percent saline solution, and test exposure shall be for 20 hours, +30/−0 minutes.

8.27.4.2 Immediately following the test exposure and prior to examination, specimens shall be rinsed under warm, running tap water and dried with compressed air.

8.27.4.3 Specimens shall then be examined visually with the unaided eye to determine whether they pass or fail.

8.27.4.4 The functionality of each specimen shall be evaluated.

8.27.5 Report. The presence of corrosion and the functionality of each specimen shall be recorded and reported.

8.27.6 Interpretation. One or more hardware specimens failing this test shall constitute failing performance for the hardware type.

8.28 Footwear Conductive Heat Resistance Test.

8.28.1 Specimens.

8.28.1.1 A minimum of three complete footwear items shall be tested.

8.28.2 Sample Preparation.

8.28.2.1 Samples for conditioning shall be whole footwear.

8.28.2.2 Specimens shall be preconditioned as specified in 8.1.1.

8.28.3 Apparatus.

8.28.3.1 The apparatus shall consist of an iron plate measuring 25 mm × 150 mm × 460 mm (1 in. × 6 in. × 18 in.) and an oven capable of heating the plate to a temperature of 500°C (932°F), a Type J or Type K thermocouple, and a meter to read the thermocouple temperature.

8.28.4 Procedure.

8.28.4.1 The thermocouple shall be affixed to the insole surface of the specimen next to the foot, directly above the ball of the foot. The thermocouple shall be taped to the surface with electrical tape to hold it onto the insole surface.

8.28.4.2 The plate shall be heated to a temperature of 500°C, ±10°C (932°F, ±18°F) and shall maintain this temperature throughout the test period.

8.28.4.3 The specimen shall be filled with 4.55 kg (10 lb) of 10 mm (⅜ in.) steel balls. The weight of the steel balls shall be evenly distributed inside the boot. The specimen shall be placed on the plate in the upright position for 30 seconds.

8.28.4.4 The thermocouple temperature shall be recorded 30 seconds, +2/−0 seconds, after the specimen is placed on the heated metal plate.

8.28.5 Report.

8.28.5.1 The temperature at 30 seconds of exposure shall be recorded and reported for each specimen.

8.28.5.2 The average temperature at 30 seconds of exposure for all specimens shall also be calculated, recorded, and reported.

8.28.6 Interpretation.

8.28.6.1 The average temperature at 30 seconds of exposure for all specimens shall be used to determine pass or fail performance.

8.29 Eyelet and Stud Post Attachment Test.

8.29.1 Application.

8.29.1.1 This test method shall apply to protective footwear eyelets and stud posts.

8.29.2 Specimens.

8.29.2.1 Specimens shall total two eyelets and two stud posts on three separate footwear items.

8.29.2.2 Specimens shall be removed from the footwear and shall be 25 mm × 50 mm (1 in. × 2 in.).

8.29.3 Sample Preparation.

8.29.3.1 Samples for conditioning shall be whole footwear.

8.29.3.2 The eyelets or stud post specimens shall be conditioned as specified in 8.1.1.

8.29.4 Apparatus.

8.29.4.1 A tensile testing machine shall be used with a traverse rate of 50 mm/min (2 in./min). Clamps measuring 25 mm × 38 mm (1 in. × 1½ in.) shall have gripping surfaces that are parallel, flat, and capable of preventing slippage of the specimen during the test.

Copyright National Fire Protection Association
Provided by IHS under license with NFPA
No reproduction or networking permitted without license from IHS
Not for Resale

8.29.5 Procedure.

8.29.5.1 The stud post or eyelet puller shall be inserted or attached to the upper position of the tensile machine.

8.29.5.2 The traverse rate shall be set at 50 mm/min (2 in./min).

8.29.5.3 The test eyelet or stud post shall be attached using the appropriate puller fixture.

8.29.5.4 The eyelet stay shall be clamped, but clamping the metal portion of the eyelets of stud hooks in the lower clamps shall not be permitted.

8.29.5.5 The distance between the clamps and the stud hooks or eyelets shall be 2 mm to 3 mm (5⁄64 in. to 1⁄8 in.).

8.29.5.6 The test shall then be started.

8.29.6 Report.

8.29.6.1 The force will reach a peak, decline slightly, and then increase to complete failure; however, the value at which the force first declines shall be recorded and reported as the detachment strength, because this is the initial failure point where separation of the material around the eyelet or the stud post occurs.

8.29.6.2 Each detachment strength force shall be calculated, recorded, and reported.

8.29.7 Interpretation.

8.29.7.1 Each detachment strength force shall be evaluated to determine pass or fail performance.

8.29.7.2 Any single detachment strength force less than 294 N (66 lbf) shall constitute failing performance.

8.30 Chain Saw Cut Resistance Test.

8.30.1 Application. This test method shall apply to chain saw protectors.

8.30.2 Specimens. The number of specimens for testing shall be as specified in ASTM F 1414, *Standard Test Method for Measurement of Cut Resistance to Chain Saw in Lower Body (Legs) Protective Clothing*.

8.30.3 Sample Preparation.

8.30.3.1 Samples for conditioning shall be whole chain saw protectors.

8.30.3.2 The chain saw protectors shall be conditioned as specified in 8.1.1.

8.30.4 Procedure.

8.30.4.1 The chain saw protectors shall be tested in accordance with ASTM F 1414, *Standard Test Method for Measurement of Cut Resistance to Chain Saw in Lower Body (Legs) Protective Clothing*.

8.30.4.1.1 The test shall be conducted at a chain speed 50 (CS50) 15.25 m/sec (3000 fpm) when tested at both 45 degrees and 90 degrees to the longitudinal direction of test specimen.

8.30.5 Interpretation. Failure of any single test specimen shall constitute failing performance.

8.31 Label Durability and Legibility Test 1.

8.31.1 Application.

8.31.1.1 This test method shall apply to labels on protective garments, gloves, boots, and face/neck shrouds.

8.31.1.2 Modifications to this test method for testing garment labels shall be as specified in 8.31.7.

8.31.1.3 Modifications to this test method for testing glove labels shall be as specified in 8.31.8.

8.31.1.4 Modifications to this test method for testing footwear labels shall be as specified in 8.31.9.

8.31.1.5 Modifications to this test method for testing face/neck shroud labels shall be as specified in 8.31.10.

8.31.2 Specimens.

8.31.2.1 A minimum of three of each label type for each item shall be tested in each test.

8.31.2.2 Where labels have areas of "write-in" information, two additional specimens shall be tested that include those areas, with sample information written in.

8.31.3 Sample Preparation.

8.31.3.1 Samples shall be conditioned as specified in 8.1.1.

8.31.4 Procedures.

8.31.4.1 Laundering Durability Test.

8.31.4.1.1 Specimens shall be subjected to 10 cycles of laundering and drying using Machine Cycle 1, Wash Temperature V, and Drying Procedure Ai of AATCC 135, *Dimensional Changes in Automatic Home Laundering of Woven and Knit Fabrics*.

8.31.4.1.2 A 1.8 kg, ±0.1 kg (4 lb, ±0.2 lb) load shall be used. A laundry bag shall not be used.

8.31.4.1.3 Specimens shall be examined for legibility to the unaided eye by a person with 20/20 vision or vision corrected to 20/20 and at a nominal distance of 300 mm (12 in.) in a well-illuminated area.

8.31.4.2 Abrasion Durability Test.

8.31.4.2.1 Specimens shall be subjected to abrasion in accordance with ASTM D 4966, *Standard Test Method for Abrasion Resistance of Textile Fabrics*, with the following modifications:

(1) The standard abrasive fabric and the felt-backing fabric shall be soaked for 25 hours in distilled water or agitated in distilled water until they are thoroughly wet.
(2) The standard abrasive fabric shall be rewetted after each set of cycles by applying 20 ml (0.68 oz) of distilled water from a squeeze bottle by squirting on the center of the abrasive composite pad.
(3) Specimen shall be subjected to 200 cycles, 3200 revolutions, of the test apparatus.

8.31.4.2.2 Specimens shall be examined for legibility to the unaided eye by a person with 20/20 vision or vision corrected to 20/20 and at a nominal distance of 300 mm (12 in.) in a well-illuminated area.

8.31.4.3 Heat Durability Test.

8.31.4.3.1 Specimens shall be subjected to convective heat in accordance with the procedures specified in 8.4.4 and 8.4.5.2 through 8.4.5.4, with the following modifications:

(1) The oven preheat specified in 8.4.4.6 shall be stabilized at 141°C, +6°/−0°C (285°F, +10°/−0°F).

--`,,,```-`-`,,`,,`,`,,`---

Copyright National Fire Protection Association
Provided by IHS under license with NFPA
No reproduction or networking permitted without license from IHS
Not for Resale

(2) The specimen exposure time specified in 8.4.5.4 shall begin when the test thermocouple reading recovers to 141°C, +6°/–0°C (285°F, +10°/–0°F), and the test temperature shall remain at 141°C, +6°/–0°C (285°F, +10°/–0°F) for the duration of the test.
(3) After 10 minutes, ±2 minutes, the specimens shall be removed and subjected to the required testing.

8.31.4.3.2 Specimens shall be examined for legibility to the unaided eye by a person with 20/20 vision or vision corrected to 20/20 and at a nominal distance of 300 mm (12 in.) in a well-illuminated area.

8.31.5 Report. The legibility for each specimen shall be recorded and reported as acceptable or unacceptable.

8.31.6 Interpretation. One or more label specimens failing this test shall constitute failing performance.

8.31.7 Specific Requirements for Testing Garment Labels.

8.31.7.1 For testing label legibility after laundering, specimens shall be individual labels attached onto a 1 m (1 yd) square of ballast material no closer than 50 mm (2 in.) apart in parallel strips. The ballast material shall be as specified in AATCC 135, *Dimensional Changes in Automatic Home Laundering of Woven and Knit Fabrics*.

8.31.7.2 For testing label legibility after abrasion, specimens shall be individual labels.

8.31.7.2.1 A minimum of four of each type of label shall be tested for abrasion.

8.31.7.2.2 Two specimens shall be edge specimens.

8.31.7.2.3 Where labels have areas for "write-in" information, two additional specimens shall be tested that include those areas, with sample information written in.

8.31.7.3 For testing label legibility after convective heat exposure, specimens shall include individual labels attached onto a separate 380 mm, ±13 mm (15 in., ±½ in.) square of material that meets the garment material requirements of this standard.

8.31.7.4 Sample conditioning shall be the same conditioning as specified for the respective tests.

8.31.7.5 Specimens shall be tested separately for legibility after laundering, abrasion, and heat durability tests as specified in 8.31.4.1, 8.31.4.2, and 8.31.4.3, respectively.

8.31.8 Specific Requirements for Testing Glove Labels.

8.31.8.1 For testing label legibility after laundering and convective heat exposure, specimens shall be complete gloves with labels attached.

8.31.8.2 For testing label legibility after abrasion, specimens shall be individual labels.

8.31.8.2.1 A minimum of four of each type of label shall be tested for abrasion.

8.31.8.2.2 Two specimens shall be edge specimens.

8.31.8.2.3 Where labels have areas for "write-in" information, two additional specimens shall be tested that include those areas, with sample information written in.

8.31.8.3 Sample conditioning shall be the same conditioning as specified for the respective tests.

8.31.8.4 Specimens shall be tested separately for legibility after laundering, abrasion, and heat durability tests as specified in 8.31.4.1, 8.31.4.2, and 8.31.4.3, respectively.

8.31.9 Specific Requirements for Testing Footwear Labels.

8.31.9.1 For testing label legibility after abrasion, specimens shall be individual labels.

8.31.9.2 A minimum of four specimens of each type of label shall be tested for abrasion.

8.31.9.3 Two specimens shall be edge specimens.

8.31.9.4 Where labels have areas for "write-in" information, two additional specimens shall be tested that include those areas, with sample information written in.

8.31.9.5 For testing label legibility after convective heat exposure, specimens shall be complete footwear with labels attached.

8.31.9.6 Sample conditioning shall be the same conditioning as specified for the respective tests.

8.31.9.7 Specimens shall be tested separately for legibility after abrasion and heat durability tests as specified in 8.31.4.2 and 8.31.4.3, respectively.

8.31.10 Specific Requirements for Testing Face/Neck Shroud Labels.

8.31.10.1 For testing label legibility after laundering, specimens shall be complete face/neck shrouds with labels attached.

8.31.10.2 For testing label legibility after abrasion, specimens shall be individual labels.

8.31.10.3 A minimum of four of each type of label shall be tested for abrasion.

8.31.10.4 Two specimens shall be edge specimens.

8.31.10.5 Where labels have areas for "write-in" information, two additional specimens shall be tested that include those areas, with sample information written in.

8.31.10.6 For testing label legibility after convective heat exposure, specimens shall be individual labels sewn onto a separate 380 mm, ±13 mm (15 in., ±½ in.) square of face/neck shroud material that meets the face/neck shroud material requirements of this standard.

8.31.10.7 Sample conditioning shall be the same conditioning as specified for the respective tests.

8.31.10.8 Specimens shall be tested separately for legibility after laundering, abrasion, and heat durability tests as specified in 8.31.4.1, 8.31.4.2, and 8.31.4.3, respectively.

8.32 Label Durability and Legibility Test 2.

8.32.1 Application. This test method shall apply to labels on protective helmets.

8.32.2 Specimens.

8.32.2.1 A minimum of three of each type of label shall be tested in each test.

8.32.2.2 Where labels have areas for "write-in" information, two additional specimens shall be tested that include those areas, with sample information written in.

Copyright National Fire Protection Association
Provided by IHS under license with NFPA
No reproduction or networking permitted without license from IHS
Not for Resale

8.32.3 Sample Preparation.

8.32.3.1 Samples for conditioning shall be whole helmets with the labels attached.

8.32.3.2 Specimens shall be conditioned as specified in 8.1.1 and 8.1.4.

8.32.3.3 The radiant heat conditioning specified in 8.1.4 shall be applied to the outside surface of the helmet in the area of the label.

8.32.4 Procedure. Label specimens shall be examined for legibility by a person with 20/20 vision or vision corrected to 20/20 and at a nominal distance of 300 mm (12 in.) in a well-illuminated area.

8.32.5 Report. The legibility for each label specimen shall be recorded and reported as acceptable or unacceptable.

8.32.6 Interpretation. One or more label specimens failing this test shall constitute failing performance.

Annex A Explanatory Material

Annex A is not a part of the requirements of this NFPA document but is included for informational purposes only. This annex contains explanatory material, numbered to correspond with the applicable text paragraphs.

A.1.1.3 The responsibility for developing requirements for respiratory protection for wildland fire-fighting operations, if it is deemed necessary, belongs to the Technical Committee on Respiratory Protection and Personal Alarm Equipment and not with the Technical Committee on Wildland Fire Fighting Protective Clothing and Equipment. The following general information is provided to enhance reader awareness.

A limited number of studies of air samples collected on wildland fire fighters and workers involved with prescribed burning indicate potential for hazardous exposure (e.g., respirable particulate, carbon monoxide, formaldehyde, and acrolein). Studies of the respiratory effects of smoke exposure on wildland fire fighters indicate that exposure during a fire season may result in changes in lung function. The health implications of short-term exposures and the potential health effects of long-term exposures are yet to be quantified.

It is current practice to consider wildfire smoke not immediately dangerous to life and health (IDLH), even though the human health hazards have not been quantified. As a prudent practice, significant wildfire smoke exposure should be reduced when possible. Fire fighters and crew supervisors should consider the level of smoke exposure of the tasks to be performed before committing personnel to action. Mitigation efforts could include short work periods, removal of crews from areas of heavy smoke concentration, or use of respiratory protection. While self-contained breathing apparatus (SCBA) offers the most complete respiratory protection, SCBA might not be practical for use by wildland fire fighters who work for extended periods in remote locations. The weight of an SCBA, its limited use time, and the logistics of recharging breathing-air cylinders make SCBA impractical for use by wildland fire fighters.

No currently available air-purifying respirator provides protection for all currently known hazards of wildfire smoke. Due to the potential for increased carbon monoxide exposure, the wildland fire fighters' agency should provide programs to expand training and develop and implement procedures to monitor CO exposure when fire fighters use air-purifying respirators.

Any respirator being considered for use by wildland fire fighters must be National Institute of Occupational Safety and Health (NIOSH) certified. Care should be exercised in the use of NIOSH-certified respirators because they have not been tested for heat resistance and flammability of the filter medium and have not been evaluated for their ability to provide protection from the products of combustion of wildfires.

A.1.2.1 Based on information studied by this Committee, the majority of documented injuries to wildland fire fighters are related to heat stress. The goal of this standard is to provide the fire fighter thermal protection against external heat sources using flame-resistant protective clothing and equipment without inducing an extraordinary internal heat stress load.

The total protection package consists of protective clothing and equipment for normal exposure limits and an emergency fire shelter for severe exposure situations in which serious injury or death can result.

Objectively, the clothing should be flame resistant so that it does not contribute to burns resulting primarily from radiant heat and limited conductive heat (direct flame contact). The clothing should also have a thermal heat loss factor to minimize the adverse effect of body heat retention caused by high work output over long periods.

Wildland fire fighters face working conditions characterized by work periods as long as 36 to 48 hours, in deserts and high mountains, in temperatures from below freezing to above 49°C (120°F), and in relative humidity ranging from very dry to very humid. Their proximity to the fire can be as close as a few feet to as far as several miles away.

The work done by the wildland fire fighter involves manual labor. Fire lines are constructed with hand tools that are used to cut, dig, and scrape. Portable power equipment is carried to and used on the fire line. Hose lines are also carried and pulled to the fire to provide water. Mechanized equipment such as bulldozers and tractor plows are used where possible.

The fire environment that affects the fire fighter involves smoke and heat. Smoke causes inefficient respiration, causing fire fighters to work their bodies harder when performing tasks and increasing stress. Accumulations of carbon monoxide in the bloodstream coupled with fatigue can create a dangerous work situation. The long-term effects of wildland smoke exposure are only now in the preliminary study stages.

Ambient air temperature is not the only source of external heat. Those working close to a fire are affected primarily by radiant heat, some convective heat, and, in extreme situations, conductive heat.

The minimum radiant protective requirements specified in this standard do not necessarily address other important factors provided in wildland fire-fighter protective clothing. However, radiant heat is the primary thermal hazard requiring protection.

The radiant protective performance (RPP) requirements, which are based on the factors listed above, recognize that the upper torso is the main heat-producing area of the body. The lower torso is more often subject to abrasion, puncture, and tearing forces. Therefore, the potential user should consider that a heavier fabric is needed for lower-torso garments.

A.1.2.3 Protective clothing and equipment that comply with this standard are designed to improve the safety of the wildland fire fighter and to mitigate adverse environmental effects to the fire fighter's body. Users are cautioned that the margin of protection can be reduced if unusual conditions prevail, if there are signs of abuse or mutilation of the equipment or any component thereof, or if modifications or replacements have been made without permission of the manufacturer.

--`,,,```-`-`,,`,,`,`,,`---

Copyright National Fire Protection Association
Provided by IHS under license with NFPA
No reproduction or networking permitted without license from IHS
Not for Resale

A.1.3.4 See A.1.1.3.

A.1.3.11 Emergency response organizations are cautioned that accessories are not part of the certified product but could be attached to a certified product by means not engineered, manufactured, or authorized by the certified product manufacturer.

Emergency response organizations are cautioned that if an accessory or its means of attachment causes the structural integrity of the certified product to be compromised, the certified product might not be compliant with the standard to which it was originally certified as compliant. Additionally, if an accessory or the accessory's means of attachment is not designed and manufactured from suitable materials for the hazardous environments of emergency incidents, the failure of the accessory or its means of attachment could cause injury to the emergency responder.

Because the aftermarket for accessories for certified products is so broad, emergency response organizations are advised to contact both the accessory manufacturer and the manufacturer of the certified product and verify that the accessory and its means of attachment are suitable for use in the intended emergency response environment. Emergency response organizations should seek and receive written documentation to validate the following information from the accessory manufacturer:

(1) Accessories for a certified product and the means of attachment will not degrade the designed protection or performance of the certified product below the requirements of this standard to which it was designed, manufactured, tested, and certified.
(2) The accessory, when properly attached to the certified product, will not interfere with form, fit, or function of the certified product or with the form, fit, and function of any of the certified product's component parts.

Users are also cautioned that the means of attachment for accessories that fail to safely and securely attach the accessory to a certified product can allow the accessory to inadvertently dislodge from the certified product and could cause a risk to emergency response personnel in the vicinity.

A.3.2.1 Approved. The National Fire Protection Association does not approve, inspect, or certify any installations, procedures, equipment, or materials; nor does it approve or evaluate testing laboratories. In determining the acceptability of installations, procedures, equipment, or materials, the authority having jurisdiction may base acceptance on compliance with NFPA or other appropriate standards. In the absence of such standards, said authority may require evidence of proper installation, procedure, or use. The authority having jurisdiction may also refer to the listings or labeling practices of an organization that is concerned with product evaluations and is thus in a position to determine compliance with appropriate standards for the current production of listed items.

A.3.2.2 Authority Having Jurisdiction (AHJ). The phrase "authority having jurisdiction," or its acronym AHJ, is used in NFPA documents in a broad manner, since jurisdictions and approval agencies vary, as do their responsibilities. Where public safety is primary, the authority having jurisdiction may be a federal, state, local, or other regional department or individual such as a fire chief; fire marshal; chief of a fire prevention bureau, labor department, or health department; building official; electrical inspector; or others having statutory authority. For insurance purposes, an insurance inspection department, rating bureau, or other insurance company representative may be the authority having jurisdiction. In many circumstances, the property owner or his or her designated agent assumes the role of the authority having jurisdiction; at government installations, the commanding officer or departmental official may be the authority having jurisdiction.

A.3.2.4 Listed. The means for identifying listed equipment may vary for each organization concerned with product evaluation; some organizations do not recognize equipment as listed unless it is also labeled. The authority having jurisdiction should utilize the system employed by the listing organization to identify a listed product.

A.3.3 For the purposes of this standard, the terms defined in this section have the meanings stated unless modified by the mandatory requirements of this standard. Terms used in the present tense include the past and future tense. Terms used in the masculine gender include female and neuter genders, terms used in the singular include the plural, and terms used in the plural include the singular.

A.3.3.15 Component(s). Components include items required for the design and construction of the product and evaluated and tested individually or evaluated and tested as a part of the whole product.

A.3.3.76.2 Seams (Major). Examples of these seam assembly constructions include the following:

(1) Trouser-seat seams, outseams, inseams
(2) Shirt or jacket-side seams, sleeve seams, shoulder seams
(3) One-piece garment-seat seams, outseams, inseams, side seams, shoulder seams, sleeve seams, waist seams

A.3.3.76.3 Seams (Minor). Examples of these seam assembly constructions include the following:

(1) Trouser-belt loops, cuffs, pocketing
(2) Shirt or jacket-cuffs, collar flap, hem
(3) Cold weather liner

A.3.3.100 Wildland Fire Fighting Protective Clothing and Equipment. Wildland fire fighting protective clothing and equipment include, but are not limited to, garments, helmets, goggles, face/neck shrouds, gloves, chain saw protection, footwear, and load carrying equipment.

A.3.3.104 Wildland Fire Fighting Protective Garments. Wildland fire fighting garments include, but are not limited to, jacket, shirt, trousers, cold weather outerwear, or one-piece garment. *(See also 3.3.100, Wildland Fire Fighting Protective Clothing and Equipment.)*

A.4.1.7 The National Fire Protection Association (NFPA), from time to time, has received complaints that certain items of fire and emergency services protective clothing or protective equipment might be carrying labels falsely identifying them as complying with an NFPA standard.

NFPA advises those purchasing protective clothing and equipment to be aware that, for protective clothing and equipment to meet the requirements of NFPA 1977, *Standard on Protective Clothing and Equipment for Wildland Fire Fighting,* they must be certified by an independent third-party certification organization. In addition, the item must carry the label, symbol, or other identifying mark of that certification organization.

An item that does not bear the mark of an independent third-party certification organization is NOT COMPLIANT with NFPA 1977, even if the product label states that the item is compliant.

Copyright National Fire Protection Association
Provided by IHS under license with NFPA
No reproduction or networking permitted without license from IHS
Not for Resale

For further information about certification and product labeling, Chapters 4 and 5 of NFPA 1977 should be referenced. Also, the definitions for *certification/certified*, *labeled*, and *listed* in Chapter 3 should be reviewed.

Third-party certification is an important means of ensuring the quality of fire and emergency services protective clothing and equipment. To be certain that an item is properly certified, labeled, and listed, NFPA recommends that prospective purchasers require appropriate evidence of certification for the specific product and model from the manufacturer before purchasing. Prospective purchasers also should contact the certification organizations and request copies of the certification organization's "list" of certified products to the appropriate NFPA standard. This "listing" is a requirement of this standard for third-party certification and is a service performed by the certification organization.

All NFPA standards on fire and emergency services protective clothing and equipment require that the item be certified by an independent third-party certification organization and, as with NFPA 1977 protective clothing or protective equipment, all items of fire and emergency services protective clothing and equipment must carry the label, symbol, or other identifying mark of that certification organization.

Any item of protective clothing or protective equipment covered by an NFPA standard that does not bear the mark of an independent third-party certification organization is NOT COMPLIANT with the appropriate NFPA standard, even if the product label states that the item is compliant.

A.4.2.1 The certification organization should have sufficient breadth of interests and activities so that the loss or award of a specific business contract is not a determining factor in the financial well-being of the agency.

A.4.2.5 The contractual provisions covering the certification programs should contain clauses advising the manufacturer that, if requirements change, the product should be brought into compliance with the new requirements by a stated effective date through a compliance review program involving all currently listed products. Without these clauses, certifiers are not able to move quickly to protect their name, marks, or reputation. A product safety certification program is deficient without these contractual provisions and the administrative means to back them up.

A.4.2.6 Investigative procedures are important elements of an effective and meaningful product safety certification program. A preliminary review should be carried out on products submitted to the agency before major testing is undertaken.

A.4.2.7.1 For further information and guidance on recall programs, see 21 CFR 7, Subpart C.

A.4.2.9 Such inspections should include, in most instances, witnessing product tests. In the case of certain products, the certification organization inspectors should select samples from the production line and submit them to the main laboratory for countercheck testing. With other products, it might be desirable to purchase samples in the open market for test purposes.

A.4.6.1 ISO 27, *Guidelines for corrective action to be taken by a certification body in the event of misuse of its mark of conformity*, is a component of accreditation of certification organizations specified in 4.1.3 and 4.2.3 of this standard. Those paragraphs contain a mandatory reference to ISO 65, *General requirements for bodies operating product certification systems*, in which ISO 27 is referenced.

A.4.6.2 By definition, a hazard might involve a condition that can be imminently dangerous to the end user. With this thought in mind, the investigation should be started immediately and completed in as timely a manner as is appropriate considering the particulars of the hazard being investigated.

A.4.6.11 The determination of the appropriate corrective action for the certification organization to initiate should take into consideration the severity of the product hazard and its potential consequences to the safety and health of end users. The scope of testing and evaluation should consider, among other things, testing to the requirements of the standard to which the product was listed as compliant, the age of the product, the type of use and conditions to which the compliant product has been exposed, the care and maintenance that has been provided, the use of expertise on technical matters outside the certification organization's area of competence, and product hazards caused by circumstances not anticipated by the requirements of the applicable standard. As a guideline for determining whether a safety alert or a product recall is more appropriate, the following product hazard characteristics are provided, which are based on 42 CFR 84, Subpart E, paragraph 84.41:

(1) **Critical.** A product hazard that judgment and experience indicate is likely to result in a condition immediately hazardous to life or health (IHLH) for individuals using or depending on the compliant product. If an IHLH condition occurs, the user will sustain or will be *likely* to sustain an injury of a severity that could result in loss of life or in significant bodily injury or loss of bodily function, either immediately or at some point in the future.
(2) **Major A.** A product hazard other than Critical that is likely to result in failure to the degree that the compliant product does not provide any protection or reduces protection *and is not detectable to the user.* The phrase *reduces protection* means the failure of specific protective design(s) or feature(s) that results in degradation of protection in advance of reasonable life expectancy to the point that continued use of the product is *likely* to cause physical harm to the user, or where continued degradation could lead to IHLH conditions.
(3) **Major B.** A product hazard other than Critical or Major A that is likely to result in reduced protection and is detectable to the user. The phrase *reduced protection* means the failure of specific protective design(s) or feature(s) that results in degradation of protection in advance of reasonable life expectancy to the point that continued use of the product is *likely* to cause physical harm to the user, or where continued degradation could lead to IHLH conditions.
(4) **Minor.** A product hazard other than Critical, Major A, or Major B that is not likely to materially reduce the usability of the compliant product for its intended purpose or a product hazard that is a departure from the established applicable standard and has little bearing on the effective use or operation of the compliant product for its intended purpose.

Where the facts are conclusive, based on characteristics of the hazard classified as indicated in the preceding list, the certification organization should consider initiating the following corrective actions with the authorized and responsible parties:

(1) Critical product hazard characteristics: product recall
(2) Major A product hazard characteristics: product recall or safety alert, depending on the nature of the specific product hazard
(3) Major B product hazard characteristics: safety alert or no action, depending on the nature of the specific product hazard
(4) Minor product hazard characteristic: no action

Copyright National Fire Protection Association
Provided by IHS under license with NFPA
No reproduction or networking permitted without license from IHS
Not for Resale

A.4.6.13 Reports, proposals, and proposed TIAs should be addressed to the technical committee that is responsible for the applicable standard and be sent to Standards Administration, NFPA, 1 Batterymarch Park, Quincy, MA 02169-7471.

A.5.1.1.4 See A.4.1.7.

A.5.2.1.4 See A.4.1.7.

A.5.3.1.4 See A.4.1.7.

A.5.4.1.4 See A.4.1.7.

A.5.5.1.4 See A.4.1.7.

A.5.6.1.4 See A.4.1.7.

A.5.7.1.4 See A.4.1.7.

A.5.8.1.4 See A.4.1.7.

A.8.1.4.10 A radiant heat test for helmets is specified. Under controlled conditions, a radiant heat load of 1 W/cm^2 is applied until a temperature of 177°C (350°F) is reached on a transducer. This temperature alone does not simulate actual field conditions but is a test devised to put extreme heat loads on helmets in an accurate and reproducible manner by testing laboratories. However, the radiant heat load of 1 W/cm^2 was selected as an average value based on studies of fire conditions that relate to field use.

A.8.9.4.1 Apparatus of the type described in this method may be obtained from the following sources:

(1) Fisher Scientific Company, 711 Forbes Avenue, Pittsburgh, PA 15219 (Their apparatus is known as the Fisher-Johns Melting Point Apparatus.)
(2) Thomas Scientific, P.O. Box 99, Swedesboro, NJ 08085

A.8.9.4.3(2) Six standards for use in calibrating melting point apparatus can be obtained from U.S. Pharmacopeia Reference Standards, 46 Park Avenue, New York, NY 10016.

Annex B Informational References

B.1 Referenced Publications. The following documents or portions thereof are referenced within this standard for informational purposes only and are thus not part of the requirements of this document unless also listed in Chapter 2.

B.1.1 NFPA Publications. (Reserved)

B.1.2 Other Publications.

B.1.2.1 ISO Publications. International Organization for Standardization, 1, rue de Varembé, Case postale 56, CH-1211 Genève 20, Switzerland.

ISO 27, *Guidelines for corrective action to be taken by a certification body in the event of misuse of its mark of conformity*, 1983.

ISO 65, *General requirements for bodies operating product certification systems*, 1996.

B.1.2.2 U.S. Government Publications. U.S. Government Printing Office, Washington, DC 20402.

Title 21, Code of Federal Regulations, Part 7, Subpart C.

Title 42, Code of Federal Regulations, Part 84, Subpart E.

B.1.2.3 Other Publications.

Merriam-Webster's Collegiate Dictionary, 11th edition, Merriam-Webster, Inc., Springfield, MA, 2003.

B.2 Informational References. (Reserved)

B.3 References for Extracts. (Reserved)

Copyright National Fire Protection Association
Provided by IHS under license with NFPA
No reproduction or networking permitted without license from IHS
Not for Resale

Index

© 2005 National Fire Protection Association. All Rights Reserved.

The copyright in this index is separate and distinct from the copyright in the document that it indexes. The licensing provisions set forth for the document are not applicable to this index. This index may not be reproduced in whole or in part by any means without the express written permission of NFPA.

-A-

Abrasion test
Footwear abrasion test 7.4.5, 8.18
Labels 8.31.4.2
Accessories 1.3.11, 4.3.14, A.1.3.11
Application of standard 1.3, A.1.3.4, A.3.11
Approved (definition) 3.2.1, A.3.2.1
Attachment test
Eyelet and stud posts 7.4.8, 8.29
Goggle and headlamp clips 7.2.9, 8.19
Authority having jurisdiction (definition) 3.2.2, A.3.2.2

-B-

Back length ..... 6.1.6, Table 6.1.17.6
Definition 3.3.1
Back rise ..... Table 6.1.17.3(b)
Definition 3.3.2
Bottom circumference ..... Table 6.1.17.6
Definition 3.3.3
Brim 6.2.3, 6.2.7
Definition 3.3.4
Burst strength test 7.1.7.1, 7.5.6.1, 8.10

-C-

Certification/certified ..... Chap. 4
Annual verification of product compliance 4.4
Definition 3.3.5
Hazards involving compliant products 4.6, A.4.6
Manufacturer's investigation of complaints and returns 4.7
Manufacturer's quality assurance program 4.5, A.4.5
Program 4.2, A.4.2
Safety alert and product recall systems 4.8
Sample testing 4.3
Certification organization .... 4.1.3, 4.1.7 to 4.1.10, 4.2, A.4.1.7, A.4.2; *see also* Recertification
Contract with manufacturers 4.2.5, A.4.2.5
Definition 3.3.6
Hazards involving compliant products 4.6, A.4.6
Testing 4.2.6, 4.3, 4.4.1, A.4.2.6
Chain saw protectors
Definition 3.3.7
Design requirements 6.7
Labeling requirements 5.7.1, A.4.1.7
Performance requirements 7.7
Testing requirements
Chain saw cut resistance 7.7.1, 8.30
Heat and thermal shrinkage resistance ..... 7.7.2, 7.7.3, 8.4.1 to 8.4.7, 8.4.16
Preconditioning 8.1.1
Thread heat resistance ..... 7.7.4, 8.9, A.8.9.4.1, A.8.9.4.3(2)
User information 5.7.2
Char (definition) 3.3.8
Chest circumference ..... Table 6.1.17.6
Definition 3.3.9
Chin straps 6.2.3, 6.2.6, 6.2.12
Definition 3.3.10
Retention system test 7.2.8, 8.17
Cleaning
Laundering durability test, label 8.31.4.1
Laundering preconditioning 8.1.2
Shrinkage resistance test 7.1.8, 7.5.7, 8.7
User information ..... 5.1.2.5(6), 5.2.2.5(6), 5.3.2.5(6), 5.4.2.5(6), 5.5.2.5(6), 5.6.2.5(6), 5.8.2.5(6)
Closure systems
Chain saw protectors 6.7.5
Face/neck shroud ..... 6.5.6, 6.5.7 to 6.5.9, 7.5.4
Garments ..... 6.1.3 to 6.1.5, 6.1.7 to 6.1.9, 6.1.11, 6.1.12, 6.1.15, 7.1.4
Load carrying equipment 6.8.4, 7.8.2
Cold weather outerwear .....*see* Wildland fire fighting protective cold weather outerwear
Collars
Design requirements 6.1.2
Length ..... Table 6.1.17.3(a), Table 6.1.17.3(d)
Definition 3.3.12
Performance requirements 7.1.4
Linings 7.1.2, 7.1.3, 7.1.7, 7.1.8
Width ..... Table 6.1.17.3(a), Table 6.1.17.3(d)
Definition 3.3.13
Complaints and returns, investigation of 4.7
Compliance/compliant 4.1.1, 4.1.2, 4.1.4
Definition 3.3.14
Labeled for .....*see* Labeled
Components (definition) 3.3.15, A.3.3.15
Composite (definition) 3.3.16
Conductive heat resistance test 7.3.3, 7.4.6, 8.21, 8.28
Corrosion resistance test 7.4.2, 8.27
Crown (definition) 3.3.17
Crown straps (definition) 3.3.18
Cuffs
Circumference ..... Table 6.1.17.6
Definition 3.3.20
Definition 3.3.19
Design requirements ..... 6.1.3, Table 6.1.17.3(b), Table 6.1.17.3(d)
Cut resistance test 7.4.3, 8.23
Gloves 7.3.5

-D-

Definitions ..... Chap. 3
Design requirements ..... 4.3.8, Chap. 6
Dexterity test 7.3.7, 8.25
Drip (definition) 3.3.21

-E-

Ease ..... Table 6.1.17.6
Definition 3.3.22
Eyelets 6.4.7
Attachment test 7.4.8, 8.29
Definition 3.3.23
Eyerow 6.4.6
Definition 3.3.24

-F-

Face/neck shroud .....*see* Wildland fire fighting protective face/neck shroud
Fasteners .....*see* Closure systems
Flame resistance .....*see also* Inherent flame resistance
Definition 3.3.26
Test
Face/neck shrouds 7.5.2, 8.3

Copyright National Fire Protection Association
Provided by IHS under license with NFPA
No reproduction or networking permitted without license from IHS
Not for Resale

Footwear 7.4.9, 8.14
Garments 7.1.2, 8.3
Gloves 7.3.2, 8.20
Flammability test, helmet antiglare 7.2.4, 8.13
Fluorescence (definition) ..... 3.3.27; *see also* Retroreflectivity and fluorescence test
Follow-up program 4.2.9
Definition 3.3.28
Footwear, protective ....*see* Wildland fire fighting protective footwear
Footwear upper 6.4.2
Cut resistance test 7.4.3, 8.23
Definition 3.3.30
Puncture resistance test 7.4.4, 8.24
Front length ..... Table 6.1.17.6
Definition 3.3.31
Front rise ..... Table 6.1.17.3(b)
Definition 3.3.32
Front waist pockets 6.1.4
Definition 3.3.33

-G-

Garments ....*see* Wildland fire fighting protective garments; Wildland fire fighting protective one-piece garment
Gloves .....*see* Wildland fire fighting protective gloves
Goggle clips 6.2.3, 6.2.6, 6.2.8
Attachment test 7.2.9, 8.19
Definition 3.3.36
Goggles .....*see* Wildland fire fighting protective goggles
Grip test 7.3.8, 8.26

-H-

Hardware
Chain saw protectors 6.7.5, 7.7.3
Definition 3.3.38
Face/neck shroud 7.5.5
Footwear 7.4.1
Garments 6.1.13, 6.1.14, 7.1.5
Goggles 6.6.5
Load carrying equipment 6.8.4, 7.8.2
Tests
Corrosion resistance test 8.27
Heat and thermal shrinkage resistance test ..... 8.4.1 to 8.4.7, 8.4.10
Hazards involving compliant products 4.2.10, 4.6, A.4.6
Headform 6.5.4.2, 8.17.4.1
Definition 3.3.39
Headlamp clips 6.2.8, 7.2.9, 8.19
Heat and thermal shrinkage resistance test 8.4
Chain saw protectors ..... 7.7.2, 7.7.3, 8.4.1 to 8.4.7, 8.4.16
Face/neck shroud ..... 7.5.3, 7.5.4, 7.5.5, 8.4.1 to 8.4.9
Footwear ..... 7.4.1, 8.4.1 to 8.4.7, 8.4.13
Garments ..... 7.1.3 to 7.1.5, 8.4.1 to 8.4.9
Gloves ..... 7.3.1, 8.4.1 to 8.4.7, 8.4.12
Goggles ..... 7.6.1, 8.4.1 to 8.4.7, 8.4.15
Helmets ..... 7.2.5, 8.4.1 to 8.4.7, 8.4.11
Load carrying protective equipment .... 7.8.1, 7.8.2, 8.4.1 to 8.4.7, 8.4.14
Heat durability test, label 8.31.4.3
Heat resistance test, conductive 7.3.3, 7.4.6, 8.21, 8.28
Heat resistance test, thread .....*see* Thread
Heat stress, protection against A.1.2.1
Heel breast 6.4.3
Definition 3.3.40
Helmet .....*see* Wildland fire fighting protective helmet
Helmet shell 6.2.3, 6.2.4, 6.2.9.2, 6.2.11, 6.2.15, 7.2.6
Definition 3.3.42
HEPA filter-equipped, air-purifying respirator A.1.1.3

-I-

Inherent flame resistance
Definition 3.3.43
Thread 6.1.10, 6.2.13, 6.3.3, 6.4.8, 6.5.10, 6.7.4
Inseam length ..... Table 6.1.17.3(b), Table 6.1.17.3(c)
Definition 3.3.44
Insole 6.4.2, 6.4.4.2
Definition 3.3.45
Inspection .....*see* Testing and inspection
Interlining
Definition 3.3.46
Performance requirements 7.1.3, 7.1.4, 7.5.3, 7.5.4
ISO registration 4.5.3, A.4.5

-J-

Jacket .....*see* Wildland fire fighting protective jacket

-K-

Knee circumference ..... Table 6.1.17.6
Definition 3.3.48
Knit fabric
Cleaning shrinkage resistance test 8.7.8
Flame resistance test 8.3.9

-L-

Label durability and legibility test
Test 7.3.9, 7.4.10, 7.5.10, 8.31, 8.32, 17.1.11, 27.2.10
Labeled 4.1.2, 4.1.5, 4.1.7, 4.1.10, 4.2.12, A.4.1.7
Annual verification of product compliance 4.4.1
Chain saw protectors 5.7.1.4, A.4.1.7
Definition 3.2.3
Face/neck shroud 5.5.1.4, A.4.1.7
Footwear 5.4.1.4, A.4.1.7
Garments 5.1.1.4, A.4.1.7
Gloves 5.3.1.4, A.4.1.7
Goggles 5.6.1.4, A.4.1.7
Helmets 5.2.1.4, A.4.1.7
Load carrying protective equipment 5.8.1.4, A.4.1.7
Labels, product .....*see* Product labels
Laundering durability test, label 8.31.4.1
Laundering preconditioning 8.1.2
Liner (definition) 3.3.49
Liners, winter .....*see* Winter liners
Lining
Collar .....*see* Collars
Definition 3.3.50
Face/neck shroud 7.5.2
Listed 4.1.5
Definition 3.2.4, A.3.2.4
Load carrying protective equipment .....*see* Wildland fire fighting protective load carrying equipment
Lower torso
Definition 3.3.52
Garment design requirements ..... Table 6.1.17.3(b), Table 6.1.17.6, Table 6.1.17.3(c)

-M-

Manufacturers 4.1.4, 4.2.1
Appeals process 4.2.11
Complaints and returns, investigation of 4.7
Contract with certification organization 4.2.5, A.4.2.5
Definition 3.3.53
Hazards involving compliant products ..... 4.6.4, 4.6.6 to 4.6.10
Investigation of complaints and returns 4.7
Product changes, evaluation of 4.2.8
Product recall .....*see* Product recall system
Quality assurance program 4.2.7, 4.5, A.4.2.7.1, A.4.5
Safety alert and product recall systems 4.8
Testing program requirements 4.3.3, 4.3.10, 4.3.16
User information provided by .....*see* User information
Measurement, units of 1.4
Melt (definition) 3.3.54

Copyright National Fire Protection Association
Provided by IHS under license with NFPA
No reproduction or networking permitted without license from IHS
Not for Resale

-N-

Nape device 6.2.3, 6.2.6, 6.2.9
Definition 3.3.55
Neck circumference ..... Table 6.1.17.6
Definition 3.3.56
Neck shroud .....*see* Wildland fire fighting protective face/neck shroud

-O-

One-piece garment ....*see* Wildland fire fighting protective one-piece garment

-P-

Pass-through openings 6.1.5
Peak 6.2.3, 6.2.7
Performance requirements ..... 4.3.9, Chap. 7
Pockets 6.1.4
Front waist 6.1.4
Definition 3.3.33
Preconditioning 8.1, A.8.1.4.11
Product labels ..... Chap. 5
Certification requirements ..... 4.1.6, 4.3.5 to 4.3.7
Chain saw protectors 5.7.1, A.4.1.7
Definition 3.3.59
Face/neck shroud ..... 5.5.1, 7.5.2, 7.5.4, 7.5.10, 8.31.1 to 8.31.6, 8.31.10, A.4.1.7
Footwear ..... 5.4.1, 7.4.10, 8.31.1 to 8.31.6, 8.31.9, A.4.1.7
Garments ..... 5.1.1, 7.1.4, 7.1.11, 8.31.1 to 8.31.7, A.4.1.7
Gloves ..... 5.3.1, 7.3.9, 8.31.1 to 8.31.6, 8.31.8, A.4.1.7
Goggles 5.6.1, A.4.1.7
Helmet 5.2.1, 7.2.10, 8.32, A.4.1.7
Load carrying protective equipment 5.8.1, A.4.1.7
Testing requirements
Heat and thermal shrinkage resistance test 7.1.4, 8.4
Label durability and legibility test .....*see* Label durability and legibility test
Product recall system 4.2.7.1, 4.5.1, 4.8, A.4.2.7.1
Products, changes in
Certification requirements 4.2.8, 4.3.11, 4.3.12, 4.3.15
Unapproved A.1.2.3
Protective clothing .....*see* Wildland fire fighting protective clothing and equipment
Protective cold weather outerwear .....*see* Wildland fire fighting protective cold weather
Protective equipment ...*see* Wildland fire fighting protective clothing and equipment
Protective face/neck shroud .....*see* Wildland fire fighting protective face/neck shroud
Protective footwear ....*see* Wildland fire fighting protective footwear
Protective garment ....*see* Wildland fire fighting protective garments
Protective gloves .....*see* Wildland fire fighting protective gloves
Protective goggles .....*see* Wildland fire fighting protective goggles
Protective helment .....*see* Wildland fire fighting protective helmet
Protective jacket .....*see* Wildland fire fighting protective jacket
Protective one-piece garment .....*see* Wildland fire fighting protective one-piece garment
Protective shirt .....*see* Wildland fire fighting protective shirt
Protective trousers .....*see* Wildland fire fighting protective trousers
Proximity fire fighting (definition) 3.3.72
Puncture resistance test 7.3.6, 7.4.4, 8.24
Purpose of standard 1.2, A.1.2.1, A.1.2.3

-Q-

Quality assurance program ..... 4.2.7, 4.5, A.4.2.7.1, A.4.5; *see also* Product recall system

-R-

Radiant protective performance (RPP) A.1.2.1
Definition 3.3.73
Test 8.2
Face/neck shroud ..... 7.5.1, 8.2.1 to 8.2.7, 8.2.9
Garments ..... 7.1.1, 8.2.1 to 8.2.8
Recertification 4.3.3, 4.3.15, 4.4
References ..... Chap. 2, Annex B
Respiratory protection A.1.1.3, A.1.2.1
Retention system test 7.2.8, 8.17
Retroreflection (definition) 3.3.74
Retroreflective markings 8.16
Garments 6.1.16, 7.1.12, 7.1.13
Helmets 6.2.3, 6.2.6, 6.2.15, 7.2.7
Load carrying protective equipment 7.8.4, 7.8.5
Retroreflectivity and fluorescence test 7.1.12, 7.1.13, 7.2.7, 7.8.4, 7.8.5, 8.16
Returns, investigation of 4.7
Room temperature conditioning 8.1.1
RPP .....*see* Radiant protective performance (RPP)

-S-

Safety alert system 4.8
Samples
Definition 3.3.75
Follow-up inspection 4.2.9.1, 4.2.9.2, 4.2.9.4
Levels 4.3.4
Recertification 4.4.2
Testing 4.3
Scope of standard 1.1, A.1.1.3
Seams .....*see also* Sewn seam strength
Assemblies 7.1.9, 7.5.8, 8.8
Definition 3.3.76.1
Major 6.1.17.8, 7.1.9.1
Definition 3.3.76.2, A.3.3.76.2
Minimum allowance 6.1.17.8
Minor 6.1.17.8, 7.1.9.1
Definition 3.3.76.3
Seat circumference ..... Table 6.1.17.6
Definition 3.3.77
Self-contained breathing apparatus A.1.1.3
Separate (definition) 3.3.78
Sewn seam strength
Definition 3.3.79
Seam breaking strength test 7.1.9, 7.5.8, 8.8
Shall (definition) 3.2.5
Shank 6.4.2
Definition 3.3.80
Shell (definition) ..... 3.3.81; *see also* Helmet shell
Shirt .....*see* Wildland fire fighting protective shirt
Should (definition) 3.2.6
Shroud .....*see* Wildland fire fighting protective face/neck shroud
Size requirements
Footwear, protective 6.4.9
Garments 6.1.17
Gloves 6.3.4
Sleeve length ..... Table 6.1.17.3(a), Table 6.1.17.3(d)
Definition 3.3.84
Slip resistance, footwear sole 7.4.7
Specimens 4.3.9.1
Definition 3.3.85
Standard (definition) 3.2.7
Structural fire fighting (definition) 3.3.86
Stud hooks and posts
Design requirements 6.4.6
Testing requirements
Attachment 7.4.8, 8.29
Corrosion resistance 7.4.2, 8.27
Suspension system
Design requirements 6.2.3, 6.2.6, 6.2.9
Retention test 7.2.6, 8.15
Sweatband 6.2.3, 6.2.6, 6.2.10

Copyright National Fire Protection Association
Provided by IHS under license with NFPA
No reproduction or networking permitted without license from IHS
Not for Resale

-T-

Tear resistance test 7.1.7, 7.5.6, 8.6
Testing and inspection
Annual verification of product compliance 4.4.1
By certification organization 4.2.6, 4.3, 4.4.1, A.4.2.6
Chain saw protectors .....*see* Chain saw protectors
Face/neck shrouds .....*see* Wildland fire fighting protective face/neck shroud
Follow-up program 4.2.9
Definition 3.3.28
Footwear .....*see* Wildland fire fighting protective footwear
Garments .....*see* Wildland fire fighting protective garments
Gloves .....*see* Wildland fire fighting protective gloves
Goggles .....*see* Wildland fire fighting protective goggles
Helmet .....*see* Wildland fire fighting protective helmet
Load carrying equipment .....*see* Wildland fire fighting protective load carrying equipment
By manufacturer 4.3.3, 4.3.10, 4.3.16
Preconditioning 8.1, A.8.1.4.11
Quality assurance program 4.5.2
Test methods ..... Chap. 8
Textile fabrics
Definition 3.3.87
Testing .....*see* Wildland fire fighting protective face/neck shroud; Wildland fire fighting protective garment
Thermal protective performance (TPP)
Definition 3.3.88
Gloves, test for 7.3.4, 8.22
Thermal shrinkage resistance .....*see* Heat and thermal shrinkage resistance test
Thigh circumference ..... Table 6.1.17.6
Definition 3.3.89
Thread
Chain saw protector 6.7.4, 7.7.4
Face/neck shroud 6.5.10, 7.5.9
Footwear 6.4.8, 7.4.11
Garment 6.1.10, 7.1.10
Gloves 6.3.3, 7.3.10
Goggles 7.6.2
Heat resistance test ..... 7.1.10, 7.2.1, 7.3.10, 7.4.11, 7.5.9, 7.6.2, 7.7.4, 7.8.3, 8.9, A.8.9.4.1, A.8.9.4.3(2)
Helmet 6.2.13, 7.2.1
Load carrying protective equipment 7.8.3
Throat (definition) 3.3.90
Top impact resistance test 7.2.2, 8.11
Top line (definition) 3.3.91
Total heat loss test 7.1.6, 8.5, A.8.5.6.3
TPP .....*see* Thermal protective performance (TPP)
Trim
Definition 3.3.92
Testing requirements
Flame resistance 7.1.2, 8.3.11
Heat and thermal shrinkage resistance ..... 7.1.4, 8.4.1 to 8.4.7, 8.4.9
Preconditioning ..... 8.1.1 to 8.1.3
Retroreflectivity and fluorescence 7.2.7, 7.8.4, 7.8.5, 8.16
Trousers .....*see* Wildland fire fighting protective trousers

-U-

Units of measurement 1.4
Upper torso
Definition 3.3.94
Garment design requirements ..... 6.1.2, 6.1.3, 6.1.6, Table 6.1.17.3(a), 6.1.17.4, Table 6.1.17.6, Fig. 6.1.17.7(a)
User information 4.3.6, 4.3.7
Chain saw protectors 5.7.2
Face/neck shroud 5.5.2
Footwear 5.4.2
Garments 5.1.2
Gloves 5.3.2
Goggles 5.6.2
Helmets 5.2.2
Load carrying equipment 5.8.2

-V-

Vertical circumference ..... Table 6.1.17.3(d), Table 6.1.17.6
Definition 3.3.95

-W-

Waist circumference ..... Table 6.1.17.6
Definition 3.3.96
Wear surface (definition) 3.3.97
Wildland fire fighting (definition) 3.3.98
Wildland fire fighting chain saw protection (definition) .... 3.3.99; *see also* Chain saw protectors
Wildland fire fighting protective clothing (definition) 3.3.100, A.3.3.100
Wildland fire fighting protective cold weather outerwear ..... 8.5.1.1; *see also* Winter liners
Definition 3.3.101
Design requirements 6.1.6, 6.1.17.1, 6.1.17.2
Wildland fire fighting protective equipment (definition) 3.3.100, A.3.3.100
Wildland fire fighting protective face/neck shroud
Certification 4.1.2.1
Definition 3.3.102
Design requirements 6.5
Labeling requirements ..... 5.5.1, 7.5.2, 7.5.4, 7.5.10, 8.31.1 to 8.31.6, 8.31.10, A.4.1.7
Performance requirements 7.5
Testing requirements
Burst strength 7.5.6.1, 8.10
Cleaning shrinkage resistance 7.5.7, 8.7
Flame resistance 7.5.2, 8.3
Heat and thermal shrinkage resistance ..... 7.5.3 to 7.5.5, 8.4.1 to 8.4.10
Label durability and legibility ..... 7.5.10, 8.31.1 to 8.31.6, 8.31.10
Radiant protective performance (RPP) ..... 7.5.1, 8.2.1 to 8.2.7, 8.2.9
Seam breaking strength 7.5.8, 8.8
Tear resistance 7.5.6, 8.6
Thread heat resistance ..... 7.5.9, 8.9, A.8.9.4.1, A.8.9.4.3(2)
User information 5.5.2
Wildland fire fighting protective footwear ....*see also* Footwear upper
Definition 3.3.103
Design requirements 6.4
Labeling requirements ..... 5.4.1, 7.4.10, 8.31.1 to 8.31.6, 8.31.9, A.4.1.7
Metal parts ..... 6.4.5 to 6.4.7, 7.4.2
Performance requirements 7.4
Size requirements 6.4.9
Testing requirements
Abrasion 7.4.5, 8.18
Conductive heat resistance 7.4.6, 8.28
Corrosion resistance 7.4.2, 8.27
Cut resistance 7.4.3, 8.23
Eyelet and stud post attachment 7.4.8, 8.29
Flame resistance 7.4.9, 8.14
Heat and thermal shrinkage resistance ..... 7.4.1, 8.4.1 to 8.4.7, 8.4.13
Label durability and legibility ... 7.4.10, 8.31.1 to 8.31.6, 8.31.9
Preconditioning 8.1.1
Puncture resistance 7.4.4, 8.24
Slip resistance 7.4.7
Thread heat resistance ..... 7.4.11, 8.9, A.8.9.4.1, A.8.9.4.3(2)
User information 5.4.2
Wildland fire fighting protective garments ....*see also* Closure systems; Cuffs; Seams; Trim; Wildland fire fighting protective one-piece garment
Custom made 6.1.17.6

--`,,,```-`-`,,`,,`,`,,`---

Copyright National Fire Protection Association
Provided by IHS under license with NFPA
No reproduction or networking permitted without license from IHS
Not for Resale

Definition 3.3.104, A.3.3.104
Design requirements 6.1
Labeling requirements ..... 5.1.1, 7.1.4, 7.1.11, 8.31.1 to 8.31.7, A.4.1.7
Performance requirements 7.1
Size requirements 6.1.17
Lower torso garments ..... Table 6.1.17.3(b) and (c)
Measurements for 6.1.17.7
Tall sizes 6.1.17.4
Upper torso garments ..... Table 6.1.17.3(a), 6.1.17.4
Testing requirements
Burst strength 7.1.7.1, 8.10
Cleaning shrinkage resistance 7.1.8, 8.7
Flame resistance 7.1.2, 8.3
Heat and thermal shrinkage resistance ..... 7.1.3 to 7.1.5, 8.4
Label durability and legibility ..... 7.1.11, 8.31.1 to 8.31.7
Preconditioning 8.1.1, 8.1.2
Radiant protective performance (RPP) ..... 7.1.1, 8.2.1 to 8.2.8
Retroreflectivity and fluorescence 7.1.12, 7.1.13, 8.16
Seam breaking strength 7.1.9, 8.8
Tear resistance 7.1.7, 8.6
Thread heat resistance ..... 7.1.10, 8.9, A.8.9.4.1, A.8.9.4.3(2)
Total heat loss 7.1.6, 8.5
User information 5.1.2

Wildland fire fighting protective gloves
Definition 3.3.105
Design requirements 6.3
Labeling requirements ..... 5.3.1, 7.3.9, 8.31.1 to 8.31.6, 8.31.8, A.4.1.7
Performance requirements 7.3
Size requirements 6.3.4
Testing requirements
Conductive heat resistance 7.3.3, 8.21
Cut resistance 7.3.5, 8.23
Dexterity 7.3.7, 8.25
Flame resistance 7.3.2, 8.20
Grip test 7.3.8, 8.26
Heat and thermal shrinkage resistance ..... 7.3.1, 8.4.1 to 8.4.7, 8.4.12
Label durability and legibility ..... 7.3.9, 8.31.1 to 8.31.6, 8.31.8
Preconditioning 8.1.1, 8.1.2
Puncture resistance 7.3.6, 8.24
Thermal protective performance (TPP) 7.3.4, 8.22
Thread heat resistance ..... 7.3.10, 8.9, A.8.9.4.1, A.8.9.4.3(2)
User information 5.3.2

Wildland fire fighting protective goggles
Definition 3.3.106
Design requirements 6.6
Labeling requirements 5.6.1, A.4.1.7
Performance requirements 7.6
Testing requirements
Goggle clip attachment 7.2.9, 8.19
Heat and thermal shrinkage resistance test ..... 7.6, 8.4.1 to 8.4.7, 8.4.15
Preconditioning 8.1.1
Thread heat resistance test ..... 7.6.2, 8.9, A.8.9.4.1, A.8.9.4.3(2)
User information 5.6.2

Wildland fire fighting protective helmet .....*see also* Wildland fire fighting protective face/neck shroud
Definition 3.3.107
Design requirements 6.2
Labeling requirements 5.2.1, 7.2.10, 8.32, A.4.1.7
Performance requirements 7.2
Retroreflective markings 6.2.3, 6.2.6, 6.2.15, 7.2.7, 8.16
Shell .....*See* Helmet shell
Testing requirements
Antiglare flammability 7.2.4, 8.13
Heat and thermal shrinkage resistance ..... 8.4.1 to 8.4.7, 8.4.11
Label durability and legibility test 8.32
Physical penetration resistance 7.2.3, 8.12
Preconditioning 8.1.1, 8.1.4, A.8.1.4.10
Retention system 8.17
Retroreflectivity 7.2.7, 8.16
Suspension system retention 8.15
Thread heat resistance ..... 8.9, A.8.9.4.1, A.8.9.4.3(2)
Top impact resistance 8.11
User information 5.2.2

Wildland fire fighting protective jacket
Definition 3.3.108
Design requirements ..... 6.1.2, 6.1.3, 6.1.6, Table 6.1.17.3(a), 6.1.17.4, Table 6.1.17.6, Fig. 6.1.17.7(a)

Wildland fire fighting protective load carrying equipment
Definition 3.3.109
Design requirements 6.8
Labeling requirements 5.8.1, A.4.1.7
Performance requirements 7.8
Testing requirements
Heat and thermal shrinkage resistance test ..... 7.8.1, 7.8.2, 8.4.1 to 8.4.7, 8.4.14
Preconditioning 8.1.1
Retroreflectivity and fluorescence 7.8.4, 7.8.5, 8.16
Thread heat resistance test ..... 7.8.3, 8.9, A.8.9.4.1, A.8.9.4.3(2)
User information 5.8.2

Wildland fire fighting protective one-piece garment
Definition 3.3.110
Design requirements ..... 6.1.2, 6.1.3, 6.1.15, Tables 6.1.17.3(d), Table 6.1.17.6, Fig. 6.1.17.7(c)

Wildland fire fighting protective shirt
Definition 3.3.111
Design requirements ..... 6.1.2, 6.1.3, 6.1.6, Table 6.1.17.3(a), 6.1.17.4, Table 6.1.17.6, Fig. 6.1.17.7(a)

Wildland fire fighting protective trousers
Definition 3.3.112
Design requirements ..... Table 6.1.17.3(b), Table 6.1.17.6, Fig. 6.1.17.7(b), Table 6.1.17.3(c)

Winter liners ..... 7.1.2 to 7.1.4
Cleaning shrinkage resistance test 7.1.8
Tear resistance test 7.1.7

Woven fabric
Cleaning shrinkage resistance test 8.7.7
Flame resistance test 8.3.8

--`,,`-`-`,,`,,`,`,,`---

Copyright National Fire Protection Association
Provided by IHS under license with NFPA
No reproduction or networking permitted without license from IHS
Not for Resale

Sequence of Events Leading to Publication of an NFPA Committee Document

Call goes out for proposals to amend existing document or for recommendations on new document.

▼

Committee meets to act on proposals, to develop its own proposals, and to prepare its report.

▼

Committee votes on proposals by letter ballot. If two-thirds approve, report goes forward. Lacking two-thirds approval, report returns to committee.

▼

Report — *Report on Proposals* (ROP) — is published for public review and comment.

▼

Committee meets to act on each public comment received.

▼

Committee votes on comments by letter ballot. If two-thirds approve, supplementary report goes forward. Lacking two-thirds approval, supplementary report returns to committee.

▼

Supplementary report — *Report on Comments* (ROC) — is published for public review.

▼

NFPA membership meets (Annual or Fall Meeting) and acts on committee report (ROP or ROC).

▼

Committee votes on any amendments to report approved at NFPA Annual or Fall Meeting.

▼

Appeals to Standards Council on Association action must be filed within 20 days of the NFPA Annual or Fall Meeting.

▼

Standards Council decides, based on all evidence, whether or not to issue standard or to take other action, including upholding any appeals.

Committee Membership Classifications

The following classifications apply to Technical Committee members and represent their principal interest in the activity of the committee.

M *Manufacturer:* A representative of a maker or marketer of a product, assembly, or system, or portion thereof, that is affected by the standard.

U *User:* A representative of an entity that is subject to the provisions of the standard or that voluntarily uses the standard.

I/M *Installer/Maintainer:* A representative of an entity that is in the business of installing or maintaining a product, assembly, or system affected by the standard.

L *Labor:* A labor representative or employee concerned with safety in the workplace.

R/T *Applied Research/Testing Laboratory:* A representative of an independent testing laboratory or independent applied research organization that promulgates and/or enforces standards.

E *Enforcing Authority:* A representative of an agency or an organization that promulgates and/or enforces standards.

I *Insurance:* A representative of an insurance company, broker, agent, bureau, or inspection agency.

C *Consumer:* A person who is, or represents, the ultimate purchaser of a product, system, or service affected by the standard, but who is not included in the *User* classification.

SE *Special Expert:* A person not representing any of the previous classifications, but who has a special expertise in the scope of the standard or portion thereof.

NOTES:

1. "Standard" connotes code, standard, recommended practice, or guide.
2. A representative includes an employee.
3. While these classifications will be used by the Standards Council to achieve a balance for Technical Committees, the Standards Council may determine that new classifications of members or unique interests need representation in order to foster the best possible committee deliberations on any project. In this connection, the Standards Council may make such appointments as it seems appropriate in the public interest, such as the classification of "Utilities" in the National Electrical Code Committee.
4. Representatives of subsidiaries of any group are generally considered to have the same classification as the parent organization.

Copyright National Fire Protection Association
Provided by IHS under license with NFPA
No reproduction or networking permitted without license from IHS
Not for Resale

NFPA Technical Committee Document Proposal Form

Note: All proposals must be received by 5:00 p.m. EST/EDST on the published proposal closing date.

For further information on the standards-making process, please contact Codes and Standards Administration at 617-984-7249. For technical assistance, please call NFPA at 617-770-3000.

FOR OFFICE USE ONLY
Log #: _____
Date Rec'd: _____

Please indicate in which format you wish to receive your ROP/ROC: ☐ **CD ROM** ☐ **paper** ☐ **download**
(Note: In choosing the download option you intend to view the ROP/ROC from our Website. No copy will be sent to you.)

Date 12/18/02 **Name** John B. Smith **Telephone** 617-555-1212
Company _____
Address 9 Seattle St. **City** Seattle **State** WA **Zip** 02255
Please indicate organization represented (if any) Fire Marshals Assn. of North America

1. **a) NFPA Document Title** National Fire Alarm Code
   b) NFPA No. & Edition NFPA 72, 2002 ed. **c) Section/Paragraph** 4.4.7.1.1

2. **Proposal Recommends:** *(check one)* ☐ **new text** ☐ **revised text** ☒ **deleted text**

3. **Proposal.** *(Include proposed new or revised wording, or identification of wording to be deleted.)* Note: Proposed text should be in legislative format, that is, use underscore to denote wording to be inserted (inserted wording) and strike-through to denote wording to be deleted (~~deleted wording~~). Delete exception.

4. **Statement of Problem and Substantiation for Proposal.** Note: State the problem that will be resolved by your recommendation. Give the specific reason for your proposal including copies of tests, research papers, fire experience, etc. If more than 200 words, it may be abstracted for publication. A properly installed and maintained system should be free of ground faults. The occurrence of one or more ground faults should be required to cause a "trouble" signal because it indicates a condition that could contribute to future malfunction of the system. Ground fault protection has been widely available on these systems for years and its cost is negligible. Requiring it on all systems will promote better installations, maintenance and reliability.

5. ☒ **This Proposal is Original Material.** Note: Original material is considered to be the submitter's own idea based on or as a result of his/her own experience, thought, or research and, to the best of his/her knowledge, is not copied from another source.

   ☐ **This Proposal is Not Original Material; Its Source** ***(if known)*** **is as Follows:** _____

Sample

I hereby grant the NFPA all and full rights in copyright to this proposal, and I understand that I acquire no rights in any publication of NFPA in which this proposal in this or another similar or analogous form is used.

Signature ***(Required)*** John B. Smith

PLEASE USE SEPARATE FORM FOR EACH PROPOSAL • NFPA FAX (617) 770-3500

Mail to: Secretary, Standards Council • NFPA • 1 Batterymarch Park • PO Box 9101 • Quincy, MA 02269-9101

--`,,```-`-`,,`,,`,`,,`---

Copyright National Fire Protection Association
Provided by IHS under license with NFPA
No reproduction or networking permitted without license from IHS

Not for Resale

NFPA Technical Committee Document Proposal Form

Note: All proposals must be received by 5:00 p.m. EST/EDST on the published proposal closing date.

For further information on the standards-making process, please contact Codes and Standards Administration at 617-984-7249. For technical assistance, please call NFPA at 617-770-3000.

FOR OFFICE USE ONLY
Log #: _____
Date Rec'd: _____

Please indicate in which format you wish to receive your ROP/ROC: ☐ **CD ROM** ☐ **paper** ☐ **download**
(Note: In choosing the download option you intend to view the ROP/ROC from our Website. No copy will be sent to you.)

Date _____ **Name** _____ **Telephone** _____
Company _____
Address _____ **City** _____ **State** _____ **Zip** _____
Please indicate organization represented (if any) _____

1. **a) NFPA Document Title** _____
   b) NFPA No. & Edition _____ **c) Section/Paragraph** _____

2. **Proposal Recommends:** *(check one)* ☐ **new text** ☐ **revised text** ☐ **deleted text**

3. **Proposal.** *(Include proposed new or revised wording, or identification of wording to be deleted.)* Note: Proposed text should be in legislative format, that is, use underscore to denote wording to be inserted (inserted wording) and strike-through to denote wording to be deleted (~~deleted wording~~). _____

4. **Statement of Problem and Substantiation for Proposal.** Note: State the problem that will be resolved by your recommendation. Give the specific reason for your proposal including copies of tests, research papers, fire experience, etc. If more than 200 words, it may be abstracted for publication. _____

5. ☐ **This Proposal is Original Material.** Note: Original material is considered to be the submitter's own idea based on or as a result of his/her own experience, thought, or research and, to the best of his/her knowledge, is not copied from another source.

   ☐ **This Proposal is Not Original Material; Its Source *(if known)* is as Follows:** _____

I hereby grant the NFPA all and full rights in copyright to this proposal, and I understand that I acquire no rights in any publication of NFPA in which this proposal in this or another similar or analogous form is used.

Signature *(Required)* _____

PLEASE USE SEPARATE FORM FOR EACH PROPOSAL • NFPA FAX (617) 770-3500

Mail to: Secretary, Standards Council • NFPA • 1 Batterymarch Park • PO Box 9101 • Quincy, MA 02269-9101

Copyright National Fire Protection Association
Provided by IHS under license with NFPA
No reproduction or networking permitted without license from IHS
Not for Resale