NFPA 1976
Standard on Protective Ensemble for Proximity Fire Fighting

2000 Edition

National Fire Protection Association, 1 Batterymarch Park, PO Box 9101, Quincy, MA 02269-9101
An International Codes and Standards Organization

Copyright National Fire Protection Association
Provided by IHS under license with NFPA
No reproduction or networking permitted without license from IHS
Not for Resale

NFPA 1976
Standard on Protective Ensemble for Proximity Fire Fighting

2000 Edition

National Fire Protection Association, 1 Batterymarch Park, PO Box 9101, Quincy, MA 02269-9101
An International Codes and Standards Organization

Copyright National Fire Protection Association
Provided by IHS under license with NFPA
No reproduction or networking permitted without license from IHS
Not for Resale

Copyright ©
National Fire Protection Association, Inc.
One Batterymarch Park
Quincy, Massachusetts 02269

IMPORTANT NOTICE ABOUT THIS DOCUMENT

NFPA codes, standards, recommended practices, and guides, of which the document contained herein is one, are developed through a consensus standards development process approved by the American National Standards Institute. This process brings together volunteers representing varied viewpoints and interests to achieve consensus on fire and other safety issues. While the NFPA administers the process and establishes rules to promote fairness in the development of consensus, it does not independently test, evaluate, or verify the accuracy of any information or the soundness of any judgments contained in its codes and standards.

The NFPA disclaims liability for any personal injury, property or other damages of any nature whatsoever, whether special, indirect, consequential or compensatory, directly or indirectly resulting from the publication, use of, or reliance on this document. The NFPA also makes no guaranty or warranty as to the accuracy or completeness of any information published herein.

In issuing and making this document available, the NFPA is not undertaking to render professional or other services for or on behalf of any person or entity. Nor is the NFPA undertaking to perform any duty owed by any person or entity to someone else. Anyone using this document should rely on his or her own independent judgment or, as appropriate, seek the advice of a competent professional in determining the exercise of reasonable care in any given circumstances.

The NFPA has no power, nor does it undertake, to police or enforce compliance with the contents of this document. Nor does the NFPA list, certify, test or inspect products, designs, or installations for compliance with this document. Any certification or other statement of compliance with the requirements of this document shall not be attributable to the NFPA and is solely the responsibility of the certifier or maker of the statement.

NOTICES

All questions or other communications relating to this document and all requests for information on NFPA procedures governing its codes and standards development process, including information on the procedures for requesting Formal Interpretations, for proposing Tentative Interim Amendments, and for proposing revisions to NFPA documents during regular revision cycles, should be sent to NFPA headquarters, addressed to the attention of the Secretary, Standards Council, National Fire Protection Association, 1 Batterymarch Park, P.O. Box 9101, Quincy, MA 02269-9101.

Users of this document should be aware that this document may be amended from time to time through the issuance of Tentative Interim Amendments, and that an official NFPA document at any point in time consists of the current edition of the document together with any Tentative Interim Amendments then in effect. In order to determine whether this document is the current edition and whether it has been amended through the issuance of Tentative Interim Amendments, consult appropriate NFPA publications such as the *National Fire Codes*® Subscription Service, visit the NFPA website at www.nfpa.org, or contact the NFPA at the address listed above.

A statement, written or oral, that is not processed in accordance with Section 5 of the Regulations Governing Committee Projects shall not be considered the official position of NFPA or any of its Committees and shall not be considered to be, nor be relied upon as, a Formal Interpretation.

The NFPA does not take any position with respect to the validity of any patent rights asserted in connection with any items which are mentioned in or are the subject of this document, and the NFPA disclaims liability for the infringement of any patent resulting from the use of or reliance on this document. Users of this document are expressly advised that determination of the validity of any such patent rights, and the risk of infringement of such rights, is entirely their own responsibility.

Users of this document should consult applicable federal, state, and local laws and regulations. NFPA does not, by the publication of this document, intend to urge action that is not in compliance with applicable laws, and this document may not be construed as doing so.

Copyright National Fire Protection Association
Provided by IHS under license with NFPA
No reproduction or networking permitted without license from IHS
Not for Resale

Licensing Policy

This document is copyrighted by the National Fire Protection Association (NFPA). By making this document available for use and adoption by public authorities and others, the NFPA does not waive any rights in copyright to this document.

1. Adoption by Reference—Public authorities and others are urged to reference this document in laws, ordinances, regulations, administrative orders, or similar instruments. Any deletions, additions, and changes desired by the adopting authority must be noted separately. Those using this method are requested to notify the NFPA (Attention: Secretary, Standards Council) in writing of such use. The term "adoption by reference" means the citing of title and publishing information only.

2. Adoption by Transcription—A. Public authorities with lawmaking or rule-making powers only, upon written notice to the NFPA (Attention: Secretary, Standards Council), will be granted a royalty-free license to print and republish this document in whole or in part, with changes and additions, if any, noted separately, in laws, ordinances, regulations, administrative orders, or similar instruments having the force of law, provided that: (1) due notice of NFPA's copyright is contained in each law and in each copy thereof; and (2) that such printing and republication is limited to numbers sufficient to satisfy the jurisdiction's lawmaking or rule-making process. **B.** Once this NFPA Code or Standard has been adopted into law, all printings of this document by public authorities with lawmaking or rule-making powers or any other persons desiring to reproduce this document or its contents as adopted by the jurisdiction in whole or in part, in any form, upon written request to NFPA (Attention: Secretary, Standards Council), will be granted a nonexclusive license to print, republish, and vend this document in whole or in part, with changes and additions, if any, noted separately, provided that due notice of NFPA's copyright is contained in each copy. Such license shall be granted only upon agreement to pay NFPA a royalty. This royalty is required to provide funds for the research and development necessary to continue the work of NFPA and its volunteers in continually updating and revising NFPA standards. Under certain circumstances, public authorities with lawmaking or rule-making powers may apply for and may receive a special royalty where the public interest will be served thereby.

3. Scope of License Grant—The terms and conditions set forth above do not extend to the index of this document.

(For further explanation, see the Policy Concerning the Adoption, Printing, and Publication of NFPA Documents, which is available upon request from the NFPA.)

Copyright National Fire Protection Association
Provided by IHS under license with NFPA
No reproduction or networking permitted without license from IHS
Not for Resale

Copyright © 2000 NFPA, All Rights Reserved

NFPA 1976

Standard on

Protective Ensemble for Proximity Fire Fighting

2000 Edition

This edition of NFPA 1976, *Standard on Protective Ensemble for Proximity Fire Fighting*, was prepared by the Technical Committee on Specialized Fire-Fighting Applications Protective Clothing and Equipment, released by the Technical Correlating Committee on Fire and Emergency Services Protective Clothing and Equipment, and acted on by the National Fire Protection Association, Inc., at its November Meeting held November 14–17, 1999, in New Orleans, LA. It was issued by the Standards Council on January 14, 2000, with an effective date of February 11, 2000, and supersedes all previous editions.

This edition of NFPA 1976 was approved as an American National Standard on February 11, 2000.

Origin and Development of NFPA 1976

This document was the first from the Technical Committee on Fire Service Protective Clothing and Equipment to address speciality protective clothing for fire-fighting operations other than structural fire fighting.

It is intended to provide thermal protection from high levels of radiant heat as well as thermal protection from conductive and convective heat present during proximity fire-fighting operations such as those involving bulk flammable liquids, bulk flammable gases, bulk flammable material, and during aircraft rescue and fire fighting.

The Subcommittee on Proximity Protective Clothing began their work in 1987 and passed their work on to the Technical Committee in January 1991. The first edition was presented to the Association at the 1992 Annual Meeting in New Orleans, LA and became effective on August 14, 1992.

Since the first edition, the entire project for fire service protective clothing and equipment was recognized in January 1995 by the Standards Council. The new project has a Technical Correlating Committee on Fire and Emergency Services Protective Clothing and Equipment and seven technical committees operating within the Project. The former standing Subcommittee on Proximity Protective Clothing was established as the new Technical Committee on Specialized Fire-Fighting Applications Protective Clothing and Equipment and has responsibility for NFPA 1976.

This second edition, with the new title of *Standard on Protective Ensemble for Proximity Fire Fighting*, represents a complete revision to the first edition and addresses the protection as an ensemble rather than separate items. This edition establishes requirements for all ensemble elements, including helmets, garments, shrouds, gloves, and footwear. This second edition was presented to the Association membership at the 1999 Fall Meeting in New Orleans, LA on November 17, 1999, and was issued by the Standards Council with an effective date of February 11, 2000.

Copyright National Fire Protection Association
Provided by IHS under license with NFPA
No reproduction or networking permitted without license from IHS
Not for Resale

Technical Correlating Committee on Fire and Emergency Services Protective Clothing and Equipment (FAE-AAC)

Richard M. Duffy, *Chair*
Int'l Assn. of Fire Fighters, DC [L]
Rep. Int'l Assn. of Fire Fighters

William M. Lambert, *Secretary*
Mine Safety Appliances Co., PA [M]
(Alt. to W.B. Miller)

Leslie Anderson, U.S. Forest Service Technology & Development Center, MT [E]

Thomas G. Augherton, Safety Equipment Inst., VA [RT]

Dennis W. Browner, Scott Aviation, NC [M]
Rep. Industrial Safety Equipment Assn.

Robert H. Chiostergi, Southern Mills Inc., GA [M]

Robert A. Freese, Globe Mfg. Co., NH [M]

William L. Grilliot, Morning Pride Mfg. Co., OH [M]
Rep. Fire and Emergency Mfrs. and Services Assn. Inc.

Cheryl L. Harris, DuPont, VA [M]

Virgil Hathaway, San Diego Fire Dept., CA [U]
Rep. Southern Area Fire Equipment Research

James S. Johnson, Lawrence Livermore Nat'l Labs, CA [RT]

Cy Long, Texas Commission on Fire Protection, TX [E]

David G. Matthews, United Kingdom Fire Brigades Assn., England [SE]
Rep. Int'l Standards Organization

Wayde B. Miller, Jacksonville Beach, FL [M]
Rep. Compressed Gas Assn./Mine Safety Appliances Co.

Jim Minx, Oklahoma State Firefighters Assn., OK [C]

Jeffrey O. Stull, Int'l Personnel Protection, Inc., TX [SE]

Frank P. Taylor, Lion Apparel, Inc., OH [M]

Robert D. Tutterow, Jr., Charlotte Fire Dept., NC [U]
Rep. Fire Industry Equipment Research Organization

Bruce H. Varner, City of Carrollton Fire Dept., TX [U]
Rep. Int'l Fire Service Training Assn.

Harry Winer, U.S. Navy, MA [RT]

Thomas L. Wollan, Underwriters Laboratories Inc., NC [RT]

Alternates

Janice C. Bradley, Industrial Safety Equipment Assn., VA [M]
(Alt. to D. W. Browner)

Nicholas J. Curtis, Lion Apparel, Inc., OH [M]
(Alt. to F. P. Taylor)

Patricia A. Freeman, Globe Mfg. Co., NH [M]
(Alt. to R. A. Freese)

Patricia A. Gleason, Safety Equipment Inst., VA [RT]
(Alt. to T. G. Augherton)

Bob Montgomery, Celanese Corp., NC [M]
(Alt. to C. L. Harris)

Daniel P. Ryan, Underwriters Laboratories Inc., NC [RT]
(Alt. to T. L. Wollan)

Tricia Vogelpohl, Springfield, LLC, SC [M]
(Alt. to R. H. Chiostergi)

Nonvoting

Don R. Forrest, United Firefighters of LA City, CA [L]

Bryan C. Heirston, Oklahoma City Fire Dept., OK [L]
Rep. Int'l Assn. of Fire Fighters

Richard Mangan, USDA Forest Service, MT [RT]

James S. Nee, ARFF Working Group, PA [U]
Rep. Aircraft Rescue & Fire Fighting Working Group

Kirk H. Owen, Plano Fire Dept., TX [U]
Rep. NFPA Fire Service Section

Ray F. Reed, Dallas Fire Dept., TX [U]

Bruce W. Teele, NFPA Staff Liaison

This list represents the membership at the time the Committee was balloted on the final text of this edition. Since that time, changes in the membership may have occurred. A key to classifications is found at the back of the document.

NOTE: Membership on a committee shall not in and of itself constitute an endorsement of the Association or any document developed by the committee on which the member serves.

Committee Scope: This Committee shall have primary responsibility for documents on the design, performance, testing, and certification of protective clothing and protective equipment manufactured for fire and emergency services organizations and personnel, to protect against exposures encountered during emergency incident operations. This Committee shall also have the primary responsibility for documents on the selection, care, and maintenance of such protective clothing and protective equipment by fire and emergency services organizations and personnel.

Copyright National Fire Protection Association
Provided by IHS under license with NFPA
No reproduction or networking permitted without license from IHS
Not for Resale

Technical Committee on Specialized Fire-Fighting Applications Protective Clothing and Equipment (FAE-SFA)

James S. Nee, *Chair*
PA [U]
Rep. Aircraft Rescue & Fire Fighting Working Group

Harry Winer, *Secretary*
U.S. Navy, MA [RT]

Charles L. Barber, DuPont, VA [M]
Karl J. Beeman, Globe Firefighters Suits, NM [M]
Catherine R. Dodgen, Intertek Testing Services, NY [RT]
George Freeman, Dallas Fire Dept., TX [U]
William R. Hutfilz, Clark County Fire Dept., NV [U]
David V. Jackson, U.S. Navy/NAVAIR, MD [E]
James Jones, Mason & Hanger Corp., TX [E]
George (Clif) McDaniel, U.S. Marine Corps, MD [E]
Kenneth Ray Mobley, City of El Paso Fire Dept., TX [U]
Bob Montgomery, Celanese Corp., NC [M]
Louis V. Ott, Gentex Corp., PA [M]
Daniel P. Ryan, Underwriters Laboratories Inc., NC [RT]
Mel Seng, Norcross Safety Products, IL [M]
Scott E. Snyder, The Boeing Fire Dept., WA [U]
Florencio D. Soliz, III, City of Austin Fire Dept., TX [U]
Frank P. Taylor, Lion Apparel Inc., OH [M]
William J. Tibbett, Texas Commission on Fire Protection, TX [E]

Alternates

Prakash G. Devasthali, Norcross Safety Products, IL [M]
(Alt. to M. Seng)
Patricia A. Freeman, Globe Mfg. Co., NH [M]
(Alt. to K. J. Beeman)
Andrew G. Schwartz, Lion Apparel Inc., OH [M]
(Alt. to F. P. Taylor)
Karen E. Strumlock, Intertek Testing Services, NY [RT]
(Alt. to C. R. Dodgen)

Bruce W. Teele, NFPA Staff Liaison

This list represents the membership at the time the Committee was balloted on the final text of this edition. Since that time, changes in the membership may have occurred. A key to classifications is found at the back of the document.

NOTE: Membership on a committee shall not in and of itself constitute an endorsement of the Association or any document developed by the committee on which the member serves.

Committee Scope: This Committee shall have primary responsibility for documents on protective clothing and protective equipment, except respiratory protective equipment, that provides hand, foot, torso, limb, head, and interface protection for fire fighters or other emergency services responders during incidents that include, but are not limited to, bulk flammable gas fires, bulk flammable liquid fires, flammable metal fires, nuclear fuel fires, exotic fuel fires, that present an unusual or extraordinary danger to personnel and involve highly specialized fire-fighting operations. These operations include the activities of rescue, fire suppression, and property conservation during fires producing very high levels of conductive, convective, or radiant heat or any combination thereof.

Additionally, this committee shall have primary responsibility for documents on the selection, care, and maintenance of specialized fire-fighting applications, protective clothing and protective equipment by fire and emergency services organizations and personnel.

Copyright National Fire Protection Association
Provided by IHS under license with NFPA
No reproduction or networking permitted without license from IHS
Not for Resale

Contents

Chapter 1 Administration **1976–** 5
1-1 Scope **1976–** 5
1-2 Purpose **1976–** 5
1-3 Definitions **1976–** 5
1-4 Units **1976–** 8

Chapter 2 Certification **1976–** 9
2-1 General **1976–** 9
2-2 Certification Organization **1976–** 9
2-3 Inspection and Testing **1976–** 9
2-4 Recertification **1976–**11
2-5 Manufacturer's Quality Assurance Program **1976–**12
2-6 ISO Registration for Manufacturers **1976–**12

Chapter 3 Labeling and Information **1976–**12
3-1 Product Label Requirements **1976–**12
3-2 User Information **1976–**13

Chapter 4 Design Requirements **1976–**13
4-1 Proximity Protective Garment Design Requirements **1976–**13
4-2 Protective Helmet Design Requirements . . **1976–**14
4-3 Protective Glove Design Requirements . . . **1976–**15
4-4 Proximity Protective Footwear Design Requirements **1976–**17
4-5 Protective Wristlet Interface Component Design Requirements **1976–**18
4-6 Accessory Design Requirements **1976–**18

Chapter 5 Performance Requirements **1976–**18
5-1 Proximity Protective Garment Performance Requirements **1976–**18
5-2 Proximity Protective Helmet Performance Requirements **1976–**19
5-3 Proximity Protective Glove Performance Requirements **1976–**20
5-4 Protective Footwear Performance Requirements **1976–**21
5-5 Protective Wristlet Interface Component Performance Requirements **1976–**22

Chapter 6 Test Methods **1976–**23
6-1 Sample Preparation Procedures **1976–**23
6-2 Flame Resistance, Test One **1976–**24
6-3 Flame Resistance, Test Two **1976–**25
6-4 Flame Resistance, Test Three **1976–**26
6-5 Flame Resistance, Test Four **1976–**27
6-6 Heat and Thermal Shrinkage Resistance Test **1976–**28
6-7 Conductive Heat Resistance, Test One . . . **1976–**31
6-8 Conductive Heat Resistance, Test Two . . . **1976–**32
6-9 Radiant Heat Resistance, Test One **1976–**32
6-10 Radiant Reflective, Test Two **1976–**32
6-11 Radiant Heat Transmittance, Test Three . **1976–**37
6-12 Conductive and Compressive Heat Resistance Test (CCHR) **1976–**38
6-13 Thermal Protective Performance (TPP) Test **1976–**39
6-14 Thread Melting Test **1976–**43
6-15 Tear Resistance Test **1976–**43
6-16 Burst Strength Test **1976–**43
6-17 Seam Breaking Strength Test **1976–**44
6-18 Top Impact Resistance Test (Force) **1976–**44
6-19 Impact Resistance Test (Acceleration) **1976–**46
6-20 Faceshield Component Resistance Test . . . **1976–**48
6-21 Impact and Compression Tests **1976–**49
6-22 Physical Penetration Resistance Test **1976–**49
6-23 Puncture Resistance, Test One **1976–**49
6-24 Puncture Resistance, Test Two **1976–**50
6-25 Cut Resistance Test **1976–**50
6-26 Abrasion Resistance Test **1976–**50
6-27 Cleaning Shrinkage Resistance Test **1976–**50
6-28 Water Penetration Test **1976–**51
6-29 Liquid Penetration Resistance Test **1976–**52
6-30 Viral Penetration Resistance Test **1976–**52
6-31 Wet Flex **1976–**53
6-32 Adhesion After Wet Flex-Tape Method . . . **1976–**54
6-33 Flex at Low Temperature **1976–**54
6-34 Resistance to High-Temperature Blocking **1976–**55
6-35 Corrosion Resistance Test **1976–**55
6-36 Electrical Insulation Test One **1976–**55
6-37 Electrical Insulation Test Two **1976–**56
6-38 Overall Liquid Integrity Test One **1976–**56
6-39 Overall Liquid Integrity Test Two **1976–**57
6-40 Retention System Test **1976–**57
6-41 Suspension System Retention Test **1976–**58
6-42 Liner Retention Test **1976–**58
6-43 Glove Hand Function Tests **1976–**59
6-44 Grip Test **1976–**60
6-45 Ladder Shank Bend Resistance Test **1976–**60
6-46 Slip Resistance Test **1976–**61
6-47 Label Durability and Legibility Test One . . **1976–**61
6-48 Label Durability and Legibility Test Two . . **1976–**62
6-49 Shell Retention Test **1976–**62
6-50 Luminous (Visible) Transmittance Test . . . **1976–**62
6-51 Helmet Shroud Opening Size Retention Test **1976–**63
6-52 Whole Garment Liquid Penetration Test . . **1976–**63
6-53 Eyelet and Stud Post Attachment Test **1976–**65

Chapter 7 Referenced Publications **1976–**65

Appendix A Explanatory Material **1976–**66

Appendix B Referenced Publications **1976–**71

Index **1976–**72

Copyright National Fire Protection Association
Provided by IHS under license with NFPA
No reproduction or networking permitted without license from IHS
Not for Resale

NFPA 1976

Standard on

Protective Ensemble for Proximity Fire Fighting

2000 Edition

NOTICE: An asterisk (*) following the number or letter designating a paragraph indicates that explanatory material on the paragraph can be found in Appendix A.

Information on referenced publications can be found in Chapter 7 and Appendix B.

Chapter 1 Administration

1-1* Scope.

1-1.1 This standard shall specify the minimum design, performance, and certification requirements and the test methods for proximity protective ensembles, including protective coats, protective trousers, protective coveralls, helmets, gloves, footwear, and interface components.

1-1.2 This standard shall apply to the design, manufacturing, and certification of new proximity protective ensembles or new individual elements of the proximity protective ensemble. This standard shall not apply to proximity fire-fighting protective clothing and equipment manufactured to comply with previous editions of NFPA 1976, *Standard on Protective Clothing for Proximity Fire Fighting*.

1-1.3 This standard shall not apply to protective clothing or ensembles for structural or wildland fire-fighting operations, for entry specialized fire-fighting operations, or for hazardous materials emergency operations. This standard shall not apply to protection from radiological agents, protection from all biological agents, or protection from all hazardous chemicals.

1-1.4 This standard shall not apply to the use of proximity fire-fighting protective clothing and equipment, since these requirements are specified in NFPA 1500, *Standard on Fire Department Occupational Safety and Health Program*.

1-1.5 Certification of the proximity fire-fighting protective ensemble, or individual elements of the protective ensemble, to the requirements of this standard shall not preclude certification to additional appropriate standards where the protective ensemble or elements of the protective ensemble meet all applicable requirements of each standard.

1-1.6 The requirements of this standard shall not apply to accessories that might be attached to any element of the proximity fire-fighting protective ensemble unless specifically addressed herein.

1-1.7 Nothing herein shall restrict any jurisdiction or manufacturer from exceeding these minimum requirements.

1-2* Purpose.

1-2.1 The purpose of this standard shall be to establish a minimum level of protection against adverse environmental conditions during proximity fire-fighting incidents that release high levels of radiant heat as well as convective and conductive heat.

1-2.2* Controlled laboratory tests used to determine compliance with the performance requirements of this standard shall not be deemed as establishing performance levels for all situations to which proximity fire-fighting personnel can be exposed.

1-2.3 This standard is not intended to be used as a detailed manufacturing or purchase specification but shall be permitted to be referenced in purchase specifications as minimum requirements.

1-3 Definitions.

1-3.1* Accessories. Those items that are attached to a proximity protective ensemble element but designed in such a manner to be removable from the proximity protective ensemble element and that are not necessary to meet the requirements of this standard.

1-3.2 Aircraft Rescue and Fire Fighting. The fire-fighting actions, performed both inside and outside of aircraft, that are taken to rescue persons and to control or extinguish fire involving or adjacent to aircraft on the ground.

1-3.3* Approved. Acceptable to the authority having jurisdiction.

1-3.4 Arch. A footwear term; the bottom curve of the foot, from the heel to the ball.

1-3.5* Authority Having Jurisdiction. The organization, office, or individual responsible for approving equipment, materials, an installation, or a procedure.

1-3.6 Barrier Material. A single-layer fabric or a laminated or coated, multilayer material considered as a single-layer fabric that limits transfer from the face of the layer to the other side.

1-3.7 Basic Plane. The anatomical plane that includes the superior rim of the external auditory meatus, the upper edge of the external openings of the ear, and the inferior margin of the orbit, which is the lowest point of the floor of the eye socket.

1-3.8 Basic Weight. The weight of the helmet, including all components specified in 4-2.2.

1-3.9 Biological Agents. Biological materials that could be capable of causing a disease or long-term damage to the human body.

1-3.10* Bitragion Coronal Arc. The arc between the right and left tragion as measured over the top of the head in a plane perpendicular to the midsagittal plane.

1-3.11* Bitragion Inion Arc. The arc between tragion as measured over the inion; for test purposes, the bitragion inion arc is identified as Datum plane 10 in Figures 6-18.4.1(a) through (c).

1-3.12 Body Fluids. Fluids produced by the body including, but not limited to, blood, semen, mucus, feces, urine, vaginal secretions, breast milk, amniotic fluid, cerebrospinal fluid, synovial fluid, and pericardial fluid.

1-3.13 Brim. That part of the helmet shell extending around the entire circumference of the helmet.

1-3.14 Brim Line. The horizontal plane intersecting the point of the front opening of the helmet at the midsagittal plane.

1-3.15 Cargo Pockets. Pockets located on the proximity protective garment exterior.

1-3.16 Certification/Certified. A system whereby a certification organization determines that a manufacturer has demonstrated the ability to produce a product that complies with the requirements of this standard, authorizes the manufacturer to use a label on listed products that comply with the require-

Copyright National Fire Protection Association
Provided by IHS under license with NFPA
No reproduction or networking permitted without license from IHS
Not for Resale

ments of this standard, and establishes a follow-up program conducted by the certification organization as a check on the methods the manufacturer uses to determine compliance with the requirements of this standard.

1-3.17 Certification Organization. An independent, third-party organization that determines product compliance with the requirements of this standard with a labeling/listing/follow-up program.

1-3.18 Char. The formation of a brittle residue when material is exposed to thermal energy.

1-3.19 Chin Strap. A helmet term for the adjustable strap, fitting under the chin, to help secure the helmet to the head.

1-3.20 Coat. See definition 1-3.86, *Proximity Protective Coat.*

1-3.21 Collar. The portion of a coat or coverall that encircles the neck.

1-3.22 Collar Lining. That part of collar fabric composite that is next to the skin when the collar is closed in the raised position.

1-3.23 Compliance/Compliant. Meeting or exceeding all applicable requirements of this standard.

1-3.24 Component. Any material, part, or subassembly used in the construction of the protective ensemble or any element of the protective ensemble. *(See also definition 1-3.62, Interface Components.)*

1-3.25 Composite. The layer or combination of layers of the protective ensemble or any element of the proximity protective ensemble that provides the required protection.

1-3.26 Coronal Plane. The anatomical plane perpendicular for both the basic and midsagittal planes and containing the midpoint of a line connecting the superior rims of the right and left auditory meatuses.

1-3.27 Coverall. See definition 1-3.87, *Proximity Protective Coverall.*

1-3.28 Crown. The portion of the helmet that covers the head above the reference plane.

1-3.29 Crown Straps. The part of the helmet suspension that passes over the head.

1-3.30 Dielectric Test Plane. The plane that runs from the intersection of the helmet test line and midsagittal plane in the front of the headform diagonally through the headform to the intersection of the reference plane and midsagittal plane in the rear of the headform.

1-3.31 Drip. To run or fall in drops or blobs.

1-3.32 Elements. The parts or items that comprise the protective ensemble. The protective ensemble elements are coats, trousers, coveralls, helmets, gloves, footwear, and interface components.

1-3.33 Energy Absorbing System. The material, suspension system, or combination thereof incorporated into the design of the helmet to attenuate impact energy.

1-3.34 Ensemble. See definition 1-3.82, *Protective Ensemble.*

1-3.35* Entry Fire Fighting. Extraordinarily specialized fire-fighting operations that can include the activities of rescue, fire suppression, and property conservation at incidents involving fires producing extreme levels of radiant, conductive, and convective heat. *(See also definitions 1-3.84, Proximity Fire Fighting, and 1-3.114, Structural Fire Fighting.)*

1-3.36 Eye/Face Positioning Index. The vertical distance, as specified by the helmet manufacturer, from the top lateral midpoint of the faceshield components to the basic plane of the Alderson 50th percentile adult male headform where the faceshield component is positioned on the headform.

1-3.37 Faceshield. A helmet component not intended as primary eye protection, but to help protect a portion of the wearer's face in addition to the eyes.

1-3.38 Flame Resistance. The property of a material whereby the application of a flaming or nonflaming source of ignition and the subsequent removal of the ignition source results in the termination of combustion. Flame resistance can be an inherent property of the material, or it can be imparted by specific treatment.

1-3.39 Follow-up Program. The sampling, inspection, tests, or other measures conducted by the certification organization on a periodic basis to determine the continued compliance of products listed that are being produced by the manufacturer to the requirements of this standard.

1-3.40 Footwear. See definition 1-3.89, *Proximity Protective Footwear.*

1-3.41 Functional. The ability of an element or component of an element to continue to be used for its intended purpose.

1-3.42 Garment(s). See definition 1-3.90, *Proximity Protective Garment.*

1-3.43 Gauntlet. A glove term for the circular, flared, or otherwise expanded part of the glove that extends beyond the opening of the glove body. *(See also definition 1-3.46, Glove Wristlet.)*

1-3.44 Glove, Body. The part of the glove that extends from the tip of the fingers to 25 mm (1 in.) beyond the wrist crease.

1-3.45 Glove, Liner. The innermost component of the glove body composite that comes into contact with the wearer's skin.

1-3.46 Glove, Wristlet. The circular, close-fitting part of the glove, usually made of knitted material, that extends beyond the opening of the glove body. *(See also definitions 1-3.43, Gauntlet, and 1-3.128, Wristlet.)*

1-3.47 Gloves. See definition 1-3.91, *Proximity Protective Glove.*

1-3.48 Hardware. Nonfabric components of the proximity protective ensemble including, but not limited to, those made of metal or plastic.

1-3.49 Hazardous Chemicals. Any solid, liquid, gas, or mixture thereof that can potentially cause harm to the human body through respiration, ingestion, skin absorption, injection, or contact.

1-3.50 Hazardous Materials Emergencies. Incidents involving the release or potential release of hazardous chemicals into the environment that can cause loss of life, personnel injury, or damage to property and the environment.

1-3.51 Headband. The portion of the helmet suspension that encircles the head.

1-3.52 Headform. A device that simulates the configuration of the human head.

1-3.53 Helmet. See definition 1-3.92, *Proximity Protective Helmet.*

1-3.54 Helmet Outer Cover. A removable helmet component that offers radiant reflective protection to the exterior of the helmet shell.

1-3.55 Helmet Positioning Index. The vertical distance, as specified by the helmet manufacturer, from the lowest point of the brow at the lateral midpoint of the helmet to the basic plane of the ISO Size J headform when the helmet is firmly positioned on the headform.

Copyright National Fire Protection Association
Provided by IHS under license with NFPA
No reproduction or networking permitted without license from IHS
Not for Resale

1-3.56 Helmet Shroud. A component of the helmet element of the proximity protective ensemble designed to provide radiant reflective heat protection for the head and neck area.

1-3.57 Hood. See definition 1-3.93, *Proximity Protective Hood.*

1-3.58 Horizontal Center Plane. The plane that passes through the helmet and whose intersection with the helmet surface is equidistant from the top of the helmet at all points.

1-3.59 Inherent Flame Resistance. As applied to textiles, flame resistance that is derived from an essential characteristic of the fiber or polymer from which the textile is made.

1-3.60 Insole. The inner part of the footwear upon which the foot rests and that conforms to the bottom of the foot.

1-3.61 Interface Area. An area of the body where the proximity protective garments, helmet, gloves, footwear, or SCBA facepiece meet (i.e., the protective coat–helmet–SCBA facepiece area, the protective coat–protective trouser area, the protective coat–glove area, and the protective trouser–footwear area).

1-3.62 Interface Components. Elements of the proximity protective ensemble that are designed to provide limited protection to interface areas.

1-3.63 Labeled. Equipment or materials to which has been attached a label, symbol, or other identifying mark of an organization that is acceptable to the authority having jurisdiction and concerned with product evaluation, that maintains periodic inspection of production of labeled equipment or materials, and by whose labeling the manufacturer indicates compliance with appropriate standards or performance in a specified manner. (*See also definition 1-3.81, Product Label.*)

1-3.64 Ladder Shank. Reinforcement to the shank area of footwear designed to provide additional support to the instep when standing on a ladder rung.

1-3.65 Liquid Borne Pathogen. An infectious bacteria or virus carried in human, animal, or clinical body fluids, organs, or tissues.

1-3.66* Listed. Equipment, materials, or services included in a list published by an organization that is acceptable to the authority having jurisdiction and concerned with evaluation of products or services, that maintains periodic inspection of production of listed equipment or materials or periodic evaluation of services, and whose listing states that either the equipment, material, or service meets appropriate designated standards or has been tested and found suitable for a specified purpose.

1-3.67 Lower Torso. The area of body below the waist including the legs but excluding the ankles and feet.

1-3.68 Major A Seams. See definition 1-3.103, *Seams (Major A).*

1-3.69 Major B Seams. See definition 1-3.104, *Seams (Major B).*

1-3.70 Manufacturer. The entity that assumes the liability and provides the warranty for the compliant product.

1-3.71 Melt. A response to heat by a material, resulting in evidence of flowing or dripping.

1-3.72 Midsagittal Plane. The anatomical plane perpendicular to the basic plane and containing the midpoint of the line connecting the notches of the right and left inferior orbital ridges, and the midpoint of the line connecting the superior rims of the right and left auditory meatus.

1-3.73 Minor Seams. See definition 1-3.105, *Seams (Minor).*

1-3.74 Model. The collective term used to identify a group of individual elements of the same basic design and components from a single manufacturer produced by the same manufacturing and quality assurance procedures that are covered by the same certification.

1-3.75 Model Weight. The basic weight of the helmet plus accessories for the specific model identified.

1-3.76 Moisture Barrier. The portion of the composite designed to prevent the transfer of liquids.

1-3.77 Nape Device. A device located below the bitragion inion arc used to aid in helmet retention.

1-3.78 Outer Cover. See definition 1-3.54, *Helmet Outer Cover.*

1-3.79 Outer Shell. The outermost layer of the composite with the exception of trim, hardware, reinforcing material, and wristlet material.

1-3.80 Product. The compliant proximity protective ensemble or the compliant elements of the proximity protective ensemble.

1-3.81 Product Label. A label or marking affixed to each compliant element of a proximity protective ensemble by the manufacturer. Such labels contain compliance statements, certification statements, general information, care, maintenance, or similar data. The product label is not the certification organization's label, symbol, or identifying mark; however, the certification organization's label, symbol, or identifying mark can be attached to or be part of the product label. *(See also definition 1-3.63, Labeled.)*

1-3.82 Protective Ensemble. A term that is synonymous with the term *proximity protective ensemble.* See definition 1-3.88, *proximity protective ensemble.*

1-3.83 Protective Wristlet. See definition 1-3.128, *Wristlet.*

1-3.84* Proximity Fire Fighting. Specialized fire-fighting operations that can include the activities of rescue, fire suppression, and property conservation at incidents involving fires producing high levels of radiant heat as well as conductive and convective heat. *(See also definitions 1-3.35, Entry Fire Fighting, and 1-3.114, Structural Fire Fighting.)*

1-3.85 Proximity Protective Clothing. See definition 1-3.88, *Proximity Protective Ensemble.*

1-3.86 Proximity Protective Coat. A proximity protective garment; an element of the proximity protective ensemble designed to provide minimum protection to upper torso and arms, excluding the hands and head.

1-3.87 Proximity Protective Coverall. A proximity protective garment; an element of the protective ensemble configured as a single-piece garment and designed to provide minimum protection to the torso, arms, and legs, excluding the head, hands, and feet.

1-3.88 Proximity Protective Ensemble. Multiple elements of clothing and equipment (coats, trousers, coveralls, helmets, gloves, footwear, and interface components) designed to provide a degree of protection for fire fighters from adverse exposures to the inherent risks of proximity fire-fighting operations and certain other emergency operations where high levels of radiant heat, as well as convective and conductive heat, are a hazard.

1-3.89* Proximity Protective Footwear. An element of the proximity protective ensemble designed to provide minimum protection to the foot, ankle, and lower leg.

1-3.90 Proximity Protective Garment. The coat, trouser, or coverall elements of the proximity protective ensemble designed to provide minimum protection to the upper and lower torso, arms, and legs, excluding the head, hands, and feet.

Copyright National Fire Protection Association
Provided by IHS under license with NFPA
No reproduction or networking permitted without license from IHS
Not for Resale

1-3.91 Proximity Protective Glove. An element of the proximity protective ensemble designed to provide minimum protection to the fingers, thumb, hand, and wrist.

1-3.92 Proximity Protective Helmet. An element of the proximity protective ensemble designed to provide minimum protection to the head.

1-3.93 Proximity Protective Hood. The interface component element of the proximity protective ensemble designed to provide limited protection to the coat–helmet–SCBA facepiece interface area. *(See also definition 1-3.62, Interface Components.)*

1-3.94 Proximity Protective Trouser. A proximity protective garment; an element of the proximity protective ensemble that is designed to provide minimum protection to the lower torso and legs, excluding the ankles and feet.

1-3.95 Puncture-Resistant Device. The reinforcement to the bottom of footwear located between the sole with heel and the insole that is designed to provide puncture resistance.

1-3.96 Radiological Agents. Radiation associated with X-rays, alpha, beta, and gamma emissions from radioactive isotopes or other materials in excess of normal background radiation levels.

1-3.97 Recall System. The action taken by which a manufacturer identifies an element, provides notice to the users, withdraws an element from the marketplace and distribution sites, and the element is returned to the manufacturer or other acceptable location for corrective action.

1-3.98 Reference Plane. The plane that is 102.5 mm down from the top of the head and parallel to the basic plane on an ISO size J headform.

1-3.99 Retention System. The complete assembly by which the helmet is retained in position on the head.

1-3.100 Sample. Proximity protective ensemble elements taken from a manufacturer's current production lot. *(See also definition 1-3.112, Specimen.)*

1-3.101 Seam. Any permanent attachment of two or more materials in a line formed by joining the separate material pieces.

1-3.102 Seam Assembly. The structure obtained when fabrics are joined by means of a seam.

1-3.103 Seams (Major A). Outer shell layer seam assemblies where rupture could reduce the protection of the garment by exposing the inner layers such as the moisture barrier, the thermal barrier, the wearer's station/work uniform, other clothing, or skin.

1-3.104 Seams (Major B). Moisture barrier or thermal barrier seam assemblies where rupture could reduce the protection of the garment by exposing the next layer of the garment, the wearer's station/work uniform, other clothing, or skin.

1-3.105 Seams (Minor). Remaining seam assemblies that are not classified as Major A or Major B seams.

1-3.106 Separate. A material response evidenced by splitting or delaminating.

1-3.107 Shall. Indicates a mandatory requirement.

1-3.108 Shank. Reinforcement to the area of protective footwear designed to provide additional support to the instep.

1-3.109 Shell. The outermost layer of the proximity protective ensemble element composite. *(See also definition 1-3.79, Outer Shell.)*

1-3.110 Should. Indicates a recommendation or that which is advised but not required.

1-3.111 Shroud. See definition 1-3.56, *Helmet Shroud.*

1-3.112 Specimen. The item that undergoes testing; in some cases, the specimen is also the sample.

1-3.113 Standard. A document, the main text of which contains only mandatory provisions using the word "shall" to indicate requirements and which is in a form generally suitable for mandatory reference by another standard or code or for adoption into law. Nonmandatory provisions shall be located in an appendix, footnote, or fine-print note and are not to be considered a part of the requirements of a standard.

1-3.114 Structural Fire Fighting. The activities of rescue, fire suppression, and property conservation in buildings, enclosed structures, vehicles, marine vessels, or like properties that are involved in a fire or emergency situation.

1-3.115 Suspension. The energy attenuating system made up of the helmet headband and crown strap.

1-3.116 Sweatband. That part of a helmet headband, either integral or attached, that comes in contact with the wearer's forehead.

1-3.117 Textile Fabric. A planar structure consisting of yarns or fibers.

1-3.118 Thermal Barrier. The portion of proximity protective ensemble element composites that is designed to provide thermal protection.

1-3.119 Toecap. The reinforcement to the toe area of footwear designed to protect the toes from impact and compression.

1-3.120 Top. The intersection between the midsagittal plane and the coronal plane extended to the helmet surface.

1-3.121 Top Line. The top edge of footwear that includes the tongue, gusset, quarter, collar, and shaft.

1-3.122 Trouser. See definition 1-3.94, *Proximity Protective Trouser.*

1-3.123 Upper. The part of footwear [as shown in Figure A-1-3(c)] including, but not limited to, the toe, vamp, quarter, shaft, collar, and throat; but not including the sole with heel, puncture-resistant device, and insole.

1-3.124 Upper Torso. The area of body above the waist and extending to the shoulder, including the arms and wrists but excluding the hands.

1-3.125 Wear Surface. The bottom of the footwear sole, including the heel.

1-3.126 Wildland Fire Fighting. The activities of fire suppression and property conservation in vegetation that are not within structures but that are involved in a fire situation.

1-3.127 Winter Liner. An optional component layer for a garment designed to provide added insulation against cold.

1-3.128 Wristlet. An interface component element of the proximity protective ensemble that is the circular, close-fitting extension of the coat sleeve, usually made of knitted material, designed to provide limited protection to the protective coat–glove interface area. *(See also definitions 1-3.43, Gauntlet; 1-3.46, Glove Wristlet; and 1-3.62, Interface Components.)*

1-4 Units.

1-4.1 In this standard, values for measurement are followed by an equivalent in parentheses, but only the first stated value shall be regarded as the requirement.

1-4.2 Equivalent values in parentheses shall not be considered as the requirement, as these values might be approximate.

Copyright National Fire Protection Association
Provided by IHS under license with NFPA
No reproduction or networking permitted without license from IHS
Not for Resale

Chapter 2 Certification

2-1 General.

2-1.1 All individual elements of the proximity protective ensemble that are labeled as being compliant with this standard shall meet or exceed all applicable requirements specified in this standard and shall be certified. Manufacturers shall not claim compliance with a portion(s) or segment(s) of the requirements of this standard and shall not use the name or identification of this standard, NFPA 1976, in any statements about their respective products unless the product is certified to this standard.

2-1.2 All certification shall be performed by a certification organization that meets at least the requirements specified in Section 2-2 and that is accredited for personal protective equipment in accordance with ANSI Z34.1, *American National Standard for Third-Party Certification Programs for Products, Processes, and Services.*

2-1.3 All individual compliant elements of the proximity protective ensemble shall be labeled and listed. All individual compliant elements of the proximity protective ensemble shall also have a product label. The product label shall meet the applicable requirements for the specific element specified in 3-1.1 and 3-2.1.

2-1.4* The certification organization's label, symbol, or identifying mark shall be attached to the product label or shall be part of the product label.

2-1.5 The certification organization shall not certify any proximity protective ensembles or individual elements of the proximity protective ensemble to the 1992 edition of NFPA 1976 on or after 1 September 2000.

2-1.6 The certification organization shall not permit any manufacturer to label any proximity protective ensembles or individual elements of the proximity protective ensemble as compliant with the 1992 edition of this standard on or after 1 September 2000.

2-1.7 The certification organization shall require manufacturers to remove all certification labels and product labels indicating compliance with the 1992 edition of NFPA 1976 from all proximity protective ensembles or individual elements of the proximity protective ensemble that are under the control of the manufacturer on 1 September 2000. The certification organization shall verify this action is taken.

2-2 Certification Organization.

2-2.1* The certification organization shall not be owned or controlled by manufacturers or vendors of the product being certified. The certification organization shall be primarily engaged in certification work and shall not have a monetary interest in the product's ultimate profitability.

2-2.2 The certification organization shall refuse to certify products to this standard that do not comply with all applicable requirements of this standard.

2-2.3* The contractual provisions between the certification organization and the manufacturer shall specify that certification is contingent on compliance with all applicable requirements of this standard. There shall be no conditional, temporary, or partial certifications. Manufacturers shall not be authorized to use any label or reference to the certification organization on products that are not manufactured in compliance with all applicable requirements of this standard.

2-2.4* The certification organization shall have laboratory facilities and equipment available for conducting proper tests, a program for calibration of all instruments shall be in place and operating, and procedures shall be in use to ensure proper control of all testing. Good practice shall be followed regarding the use of laboratory manuals, form data sheets, documented calibration and calibration routines, performance verification, proficiency testing, and staff qualification and training programs.

2-2.5 The certification organization shall require the manufacturer to establish and maintain a program of production inspection and testing that at least meets the requirements specified in Section 2-5 or Section 2-6. The certification organization shall audit the manufacturer's quality assurance program to ensure that the quality assurance program provides continued product compliance with this standard.

2-2.6 The certification organization and the manufacturer shall evaluate any changes affecting the form, fit, or function of the certified product to determine the product's continued compliance to this standard.

2-2.7* The certification organization shall have a follow-up inspection program of the manufacturing facilities of the certified product, with at least two random and unannounced visits per 12-month period. As part of the follow-up inspection program, the certification organization shall select sample product at random from the manufacturer's production line, from the manufacturer's in-house stock, or from the open market. The certification organization shall have a statistically validated process for determining the critical inspections and tests to be conducted through this follow-up program to verify the continued compliance of the product or component.

2-2.8 The certification organization shall have a program for investigating field reports alleging malperformance or failure of listed products.

2-2.9* The certification organization shall require the manufacturer to have a product recall system as part of the manufacturer's quality assurance program.

2-2.10 The certification organization's operating procedures shall provide a mechanism for the manufacturer to appeal decisions. The procedures shall include the presentation of information from both sides of a controversy to a designated appeals panel.

2-2.11 The certification organization shall be in a position to use legal means to protect the integrity of its name and label. The name and label shall be registered and legally defended.

2-3 Inspection and Testing.

2-3.1 For both certification and recertification of ensembles, ensemble elements, and components, the certification organization shall conduct both inspection and testing as specified in this section.

2-3.2 All inspections, evaluations, conditioning, and testing for certification or for recertification shall be conducted by the certification organization or by a facility accredited by the certification organization for inspections, evaluations, conditioning, and testing in accordance with all requirements pertaining to testing laboratories in ISO Guide 25, *General requirements for the competence of calibration and testing laboratories.*

Copyright National Fire Protection Association
Provided by IHS under license with NFPA
No reproduction or networking permitted without license from IHS
Not for Resale

2-3.3 All inspections, evaluations, conditioning, or testing conducted by a product manufacturer shall not be used in the certification or recertification process unless the facility for inspections, evaluations, conditioning, or testing has been accredited by the certification organization in accordance with all requirements pertaining to testing laboratories in ISO Guide 25, *General requirements for the competence of calibration and testing laboratories*.

2-3.4 Sampling levels for testing and inspection shall be established by the certification organization and the manufacturer to ensure a reasonable and acceptable reliability at a reasonable and acceptable confidence level that products certified to this standard are compliant, unless such sampling levels are specified herein. Information about sampling levels shall be provided to the purchaser upon request.

2-3.4.1 For certification of helmets, a test series shall consist of 14 helmets. A minimum of three test series shall be required for certification. Each helmet shall be subjected to the environmental conditioning and test or tests specified in Tables 2-3.4.1(a) and (b).

2-3.4.2 The order of testing shall be from left to right in Tables 2-3.4.1(a) and (b). Where there is more than one environmental condition for a specific test, the order of environmental conditioning for that test shall be from top to bottom in Tables 2-3.4.1(a) and (b).

2-3.4.3 For certification of interface components, the required testing and conditioning of the shroud and wristlet, materials, and components shall be specified as shown in Table 2-3.4.3.

2-3.5 Inspection by the certification organization shall include a review of all product labels to ensure that all required label attachments, compliance statements, certification statements, and other product information are at least as specified for the specific protective ensemble element in Sections 3-1 and 3-2.

2-3.6 Inspection by the certification organization shall include a review of any graphic representations used on product labels, as permitted by 3-1.5, to ensure that the symbols are consistent with the worded statements, readily understood, and clearly communicate the intended message.

2-3.7 Inspection by the certification organization shall include a review of the user information required by Section 3-2 to ensure that the information has been developed and is available.

2-3.8 Inspection by the certification organization for determining compliance with the design requirements specified in Chapter 4 shall be performed on whole or complete products. The certification organization shall report on the compliance of each element to each design requirement specified in Chapter 4 for that element.

Table 2-3.4.1(a) Protective Helmet Test Matrix

Test	Helmet & FS Flame Resistance	Heat Resistance	Retention	Electrical Resistance	Shell Retention	Faceshield Luminous Transmittance	Faceshield Radiant Reflective Test	Faceshield Impact	Top Impact	Label	Impact Acceleration	Penetration	Radiant Transmittance Heat Test	Hardware Corrosion
Section	**6-3**	**6-6**	**6-40 6-41**	**6-36**	**6-49**	**6-50**	**6-10**	**6-20**	**6-18**	**6-48**	**6-19**	**6-22**	**6-11**	**6-35**
Environmental Conditioning														
Room Temperature *(See 6-1.3)*	1	2	1	4	13	6	15	3	3	2	5	3	15	
Wet *(See 6-1.7)*								4	4	4	6	4		
Radiant *(See 6-1.6)*									7	7	8	14		
Low Temperature *(See 6-1.4)*								9	9	9	10	9		
Convective Heat *(See 6-1.5)*								13	11			12		
Salt Spray *(See 6-30)*														3,4,9

Table 2-3.4.1(b) Protective Helmet Covers and Shroud Test Matrix

Test	Helmet Covers & Shroud Radiant Reflective Test	Helmet Covers & Shroud Wet Flex Test	Helmet Covers & Shroud Flex at Low Temp	Helmet Covers & Shrouds High Temp Blocking Test	Shroud TPP	Helmet Cover Tear Resistance	Helmet Shroud Tear Resistance	Helmet Covers & Shroud Flame Resistance	Helmet Covers & Shroud Heat Resistance	Thread Melting Test
Section	**6-10**	**6-31**	**6-33**	**6-34**	**6-13**	**6-15**	**6-15**	**6-2**	**6-6**	**6-14**
Environmental Conditioning										
Room Temperature *(See 6-1.3)*	X	X	X	X	X	X		X	X	X
Washing & Drying *(See 6-1.2)*							X	X	X	

Copyright National Fire Protection Association
Provided by IHS under license with NFPA
No reproduction or networking permitted without license from IHS
Not for Resale

Table 2-3.4.3 Protective Shroud and Wristlet Test Matrix

Test	Flame Resistance	Heat/ Thermal Shrinkage Resistance	Heat Resistance	Radiant Reflexive	TPP	Thread Melting	Burst Strength	Seam Strength	Cleaning Shrinkage
Section	**6-2**	**6-6**	**6-6**	**6-10**	**6-13**	**6-14**	**6-16**	**6-17**	**6-27**
Test Material or Component									
Shroud material or composite	X	X	X		X		X		X
Shroud seams								X	
Shroud thread						X			
Wristlet material or composite	X	X	X		X		X		X
Wristlet seams								X	
Wristlet thread						X			
Environmental Condition									
Washing/drying *(See 6-1.2)*	X	X	X		X				X
Room temperature *(See 6-1.3)*	X	X	X		X	X	X	X	X

2-3.9 Testing conducted by the certification organization in accordance with the testing requirements of Chapter 6, for determining product compliance with the applicable performance requirements specified in Chapter 5, shall be performed on element samples or element sample specimens that are representative of materials and components used in the actual construction of protective ensemble element products. The certification organization also shall be permitted to use sample materials cut or taken from a representative product.

2-3.10 Where certification testing includes an element with an accessory or accessories, each accessory shall be certified as complying with Section 4-6.

2-3.11 Any change in the design, construction, or material of a compliant product shall necessitate new inspection and testing to verify compliance to all applicable requirements of this standard that the certification organization determines can be affected by such change. This recertification shall be conducted before labeling the modified product as being compliant with this standard.

2-3.12 The certification organization shall not allow any modifications, pretreatment, conditioning, or other such special processes of the product or any product component prior to the product's submission for evaluation and testing by the certification organization. The certification organization shall not allow test specimens that have been conditioned and tested for one test method to be reconditioned and tested for another test method unless specifically permitted in the test method.

2-3.13 The manufacturer shall maintain all design and performance inspection and test data from the certification organization used in the certification of the manufacturer's compliant product. The manufacturer shall provide such data, upon request, to the purchaser or authority having jurisdiction.

2-4 Recertification.

2-4.1 All individual elements of the protective ensemble that are labeled as being compliant with this standard shall undergo recertification on an annual basis. The recertification shall include the following:

(1) Inspection and evaluation to all design requirements and testing to all performance requirements as required by this standard on all manufacturer models and components.
(2) Testing to all performance requirements as required by this standard on all manufacturer models and components with the following protocol:
   a. Where a test method incorporates testing both before and after laundering preconditioning specified in 6-1.2 and the test generates quantitative results, recertification testing shall be limited to the conditioning that yielded in the worst case test result during the initial certification for the model or component.
   b. Where a test method incorporates testing both before and after laundering preconditioning specified in 6-1.2 and the test generates nonquantitative results (e.g., pass/fail for melt/drip), recertification shall be limited to a single conditioning procedure in any given year. Subsequent annual recertification shall cycle through the remaining conditioning procedures to ensure that all required conditionings are included over time.
   c. Where a test method requires the testing of these specimens, a minimum of one specimen shall be tested for annual recertification.
   d. Where a test method requires the testing of five or more specimens, a minimum of two specimens shall be tested for annual recertification.

2-4.1.1 Any change that affects the element's performance under the design or performance requirements of this standard shall constitute a different model.

2-4.1.2 For the purpose of this standard, models shall include each unique pattern, style, or design of the individual element.

2-4.2 Samples of manufacturer models and components for recertification shall be acquired as part of the follow-up program, in accordance with 2-2.7, and shall be permitted to be used toward annual recertification.

2-4.3 The manufacturer shall maintain all design and performance inspection and test data from the certification organization used in the recertification of manufacturer models and

Copyright National Fire Protection Association
Provided by IHS under license with NFPA
No reproduction or networking permitted without license from IHS
Not for Resale

components. The manufacturer shall provide such data, upon request, to the purchaser or authority having jurisdiction.

2-5 Manufacturer's Quality Assurance Program.

2-5.1 The manufacturer shall provide and maintain a quality assurance program that includes a documented inspection and product recall system. The manufacturer shall have an inspection system to substantiate conformance to this standard.

2-5.2 The manufacturer shall maintain written inspection and testing instructions. The instructions shall prescribe inspection and testing of materials, work in process, and completed articles. Criteria for acceptance and rejection of materials, processes, and final product shall be part of the instructions.

2-5.3 The manufacturer shall maintain records of all pass/fail tests. Pass/fail records shall indicate the disposition of a failed material or product.

2-5.4 The manufacturer's inspection system shall provide for procedures that ensure the latest applicable drawings, specifications, and instructions are used for fabrication, inspection, and testing.

2-5.5 As part of the quality assurance program, the manufacturer shall maintain a calibration program of all instruments used to ensure proper control of testing. The calibration program shall document the date of calibration and performance verification.

2-5.6 The manufacturer shall maintain a system for identifying the appropriate inspection status of component materials, work in process, and finished goods.

2-5.7 The manufacturer shall establish and maintain a system for controlling nonconforming material, including procedures for the identification, segregation, and disposition of rejected material. All nonconforming materials or products shall be identified to prevent their use, shipment, and intermingling with conforming materials or products.

2-5.8 The manufacturer's quality assurance program shall be audited by the third-party certification organization to determine that the program is sufficient to ensure continued product compliance with this standard.

2-6 ISO Registration for Manufacturers.

2-6.1 The manufacturer shall provide and operate a quality assurance program that meets the requirements of this section and that includes a product recall system as specified in 2-2.9.

2-6.2 The manufacturer shall be registered to ISO 9001, *Quality Systems — Model for Quality Assurance in Design, Development, Production, Installation, and Servicing.*

2-6.3 The ISO registration requirements shall have an effective date of 1 March 2002.

2-6.4 Until 1 March 2002 or until the date the manufacturer becomes ISO registered, whichever date occurs first, the manufacturer shall comply with Section 2-5.

Chapter 3 Labeling and Information

3-1 Product Label Requirements.

3-1.1* Each element of the protective ensemble shall have at least one product label permanently and conspicuously located inside each element when the element is properly assembled with all layers and components in place.

3-1.2 Multiple label pieces shall be permitted in order to carry all statements and information required to be on the product label; however, all label pieces comprising the product label shall be located adjacent to each other.

3-1.3* The certification organization's label, symbol, or identifying mark shall be permanently attached to the product label or shall be part of the product label. All letters shall be at least 2.5 mm ($^3/_{32}$ in.) high. The label, symbol, or identifying mark shall be at least 6 mm ($^1/_4$ in.) in height and shall be placed in a conspicuous location.

3-1.4 All worded portions of the required product label shall be printed at least in English.

3-1.5 Symbols and other pictorial graphic representations shall be permitted to be used to supplement worded statements on the product label(s).

3-1.6 The following compliance statement shall be printed legibly on the product label. The appropriate term for the element type (garment, helmet, glove, footwear) shall be inserted in the compliance statement text where indicated. All letters shall be at least 2.5 mm ($^3/_{32}$ in.) in height.

"THIS (insert appropriate element term here) **MEETS THE** (insert appropriate element term here) **REQUIREMENTS OF NFPA 1976, STANDARD ON PROTECTIVE ENSEMBLE FOR PROXIMITY FIRE FIGHTING, 2000 EDITION.**

DO NOT REMOVE THIS LABEL"

3-1.7 The following information shall also be printed legibly on the product label with all letters at least 1.5 mm ($^1/_{16}$ in.) in height:

(1) Manufacturer's name, identification, or designation
(2) Manufacturer's address
(3) Country of manufacture
(4) Manufacturer's element identification number, lot number, or serial number
(5) Month and year of manufacture, not coded
(6) Model name, number, or design
(7) Size or size range
(8) Principle material(s) of construction
(9) Cleaning precautions

3-1.8 Where other protective item(s) or detachable components must be used with proximity protective ensemble elements in order for an element to be compliant with this standard, at least the following statement and information shall also be printed legibly on the product label. All letters shall be at least 2.5 mm ($^3/_{32}$ in.) high. The appropriate term for the element type (garment, helmet, glove, footwear) shall be inserted in the statement text where indicated. Following this statement, the additional protective items or detachable components shall be listed by type, identification, and how properly assembled.

"FOR COMPLIANCE WITH THE (insert appropriate element term here) **REQUIREMENTS OF NFPA 1976, THE FOLLOWING PROTECTIVE ITEMS MUST BE WORN IN CONJUNCTION WITH THIS** (insert appropriate element term here)**:"**

(List additional items or detachable components here.)

3-1.9 For helmets only, the helmet manufacturer shall place a unique manufacturer's part number, the symbol of the certification organization, and the words "NFPA 1976, 2000 Edition" permanently on each replaceable performance-critical part of the goggle lens or faceshield.

Copyright National Fire Protection Association
Provided by IHS under license with NFPA
No reproduction or networking permitted without license from IHS
Not for Resale

3-2 User Information.

3-2.1* The manufacturer shall provide at least the user information that is specified in 3-2.4 with each element.

3-2.2 The manufacturer shall attach the required user information or packaging containing the user information to the element in such a manner that it is not possible to use the element without being aware of the availability of the information.

3-2.3* The required user information or packaging containing the user information shall be attached to the element so that a deliberate action is necessary to remove it. The manufacturer shall provide notice that the user information is to be removed *only* by the end user.

3-2.4* The manufacturer shall provide at least the following instructions and information with each element:

(1) Pre-use information
   a. Safety considerations
   b. Limitations of use
   c. Marking recommendations and restrictions
   d. A statement that most performance properties of the element cannot be tested by the user in the field
   e. Warranty information
(2) Preparation for use
   a. Sizing/adjustment
   b. Recommended storage practices
(3) Inspection frequency and details
(4) Don/doff
   a. Donning and doffing procedures
   b. Sizing and adjustment procedures
   c. Interface issues
(5) Proper use consistent with NFPA 1500, *Standard on Fire Department Occupational Safety and Health Program*, and 29 *CFR* 1910.132, General Requirements of Subpart I, *Personal Protective Equipment*
(6) Maintenance and cleaning
   a. Cleaning instructions and precautions with a statement advising users not to use an element that is not thoroughly cleaned and dried
   b. Inspection details
   c. Maintenance criteria and methods of repair where applicable
   d. Decontamination procedures for both chemical and biological contamination
(7) Retirement and disposal criteria and considerations

3-2.5 For gloves only, the manufacturer shall make a chart illustrating the hand dimension ranges specified in 4-3.7.3 available on request to prospective purchasers.

3-2.6* For footwear only, the manufacturer shall establish and provide, upon request, a size conversion chart for each model or style footwear element based on toe length, arch length, and foot width as measured on a Brannock Scientific Foot Measuring Device.

Chapter 4 Design Requirements

4-1* Proximity Protective Garment Design Requirements.

4-1.1 A sample garment shall have at least the applicable design requirements specified in this section where inspected by the certification organization as specified in Section 2-3.

4-1.2* Garments shall consist of a composite of an outer shell, moisture barrier, and thermal barrier. This composite shall be permitted to be configured as a single layer or multiple layers.

4-1.3* Garments shall have a means of securing the moisture barrier and thermal barrier to the outer shell.

4-1.4 Moisture barriers and thermal barriers, or materials meeting the performance requirements of these components, shall extend, as a minimum, to the neckline seam of the coat, to the waistline seam of the trouser, and to within 75 mm (3 in.) of the bottom outer shell hems of proximity protective garments. In coats, the moisture barriers and thermal barriers, or materials meeting the performance requirements of these components, shall also extend to within 25 mm (1 in.) of the sleeve end of the outer shell and be permitted to retract a maximum of 50 mm (2 in.) from the sleeve end of the outer shell, and in trousers, shall also extend to within 75 mm (3 in.) of the bottom outer shell hems. The liner system shall be attached at or adjacent to the end of the coat sleeves or the end of the trouser legs. Any mechanism used to attach the liner system at or adjacent to the end of the coat sleeves and the end of the trouser legs shall not be greater than 25 mm (1 in.) between the attachment points, and shall not be expandable. Moisture barriers and thermal barriers, or materials meeting the performance requirements of these components, shall be configured in a manner to provide overlap at all closures.

4-1.5 Proximity protective garments and their closure systems, including the coat front and trouser flies, shall be constructed in a manner that provides continuous moisture and thermal protection. Such closure systems shall be secured with positive locking fasteners including, but not limited to, hooks and dees or zippers. Nonpositive fasteners, such as snaps or hook and pile tape, shall not be used as positive locking fasteners but shall be permitted to be used as supplementary garment closure devices.

4-1.6 Snaps shall be Style 2 and shall comply with the design and construction requirements of MIL-F-10884G *Fastener, Snap*. The construction of the snap shall be permitted to vary from the drawings with regard to the attachment means and use of logos on the caps.

4-1.7 Aramid hook and pile fastener tapes shall not be permitted.

4-1.8 Zippers shall meet the physical performance requirements of A-A.55634, *Commercial Item Description, Zippers (Fasteners, Slide, Interlocking)*. Coat and coverall front closures zippers, trouser fly zippers, and sleeve and leg zippers shall be size 9 or larger when measured in accordance with A-A.55634, *Commercial Item Description, Zippers (Fasteners, Slide, Interlocking)*.

4-1.9 Hooks and dees shall be nonferrous. Hooks shall be inward facing and shall have at least three attachment points. Dees shall have at least two attachment points.

4-1.10 All garment hardware finish shall be free of rough spots, burrs, or sharp edges.

4-1.11* Cargo pockets, where provided, shall have a means to drain water and shall have a means of fastening in the closed position.

4-1.12 Proximity protective garments shall not have materials that do not meet the radiant reflective requirements specified in 5-1.1 affixed to the outer shell radiant reflective surfaces of the garments unless such materials are covered in 4-1.13.

Copyright National Fire Protection Association
Provided by IHS under license with NFPA
No reproduction or networking permitted without license from IHS
Not for Resale

4-1.13 Reinforcing materials that do not meet the radiant reflective requirements specified in 5-1.1 shall be permitted to be affixed only to the garment outer shell radiant reflect surfaces as reinforcement of the sleeve cuffs and trouser leg cuffs when the following requirements are met:

(1) The reinforcing materials above shall meet the flame resistant requirements specified in 5-1.8.
(2) The reinforcing materials above shall meet the heat resistance requirements specified in 5-1.10.
(3) Reinforcement areas shall not cover the radiant reflective surfaces of the garment by more than 25 mm (1 in.) when measured from the edge of the cuff back along the sleeve or leg.

4-1.14 Additional Design Requirements for Protective Coats.

4-1.14.1 Coats shall provide protection as specified to the upper torso, neck, arms, and wrists, excluding the hands and head.

4-1.14.2* Each coat sleeve shall have a protective wristlet permanently attached to the coat sleeve in a manner that will not permit a gap in the thermal protection and that meets the requirements specified in Sections 4-5 and 5-5.

4-1.14.3 Coats shall have a composite collar at least 100 mm (4 in.) in height at any point and shall have a closure system. The collar and closure system shall consist of an outer shell, moisture barrier, thermal barrier, and collar lining, or of materials that meet all applicable performance requirements as specified in Section 5-1. The collar lining material shall not be reflective material.

4-1.14.4 Coat hardware shall not penetrate through the outer shell, moisture barrier, and thermal barrier to contact the wearer's body when the coat is worn with the closures fastened, unless the hardware is completely covered by external closure flaps.

4-1.14.5* In order to label a protective coat or coverall as compliant with this standard, the manufacturer shall provide, as a minimum, men's and women's chest sizes in increments not greater than 50 mm (2 in.) and sleeve lengths in increments not greater than 25 mm (1 in.) in the ranges specified in Table 4-1.14.5.

4-1.14.6 Men's and women's sizing shall be accomplished by men's and women's individual patterning.

4-1.15 Additional Design Requirements for Protective Trousers.

4-1.15.1* Trousers shall provide protection as specified to the lower torso and legs, excluding the ankles and feet.

4-1.15.2 Trouser hardware shall not penetrate through the outer shell, moisture barrier, and thermal barrier to come into contact with the wearer's body when the trouser is worn with the closure fastened, unless the hardware is located on or above the trouser waistline or hardware is completely covered by external closure flaps.

4-1.15.3 In order to label a protective trouser or coverall as compliant with this standard, the manufacturer shall provide, as a minimum, men's and women's waist sizes in increments not greater than 50 mm (2 in.) and inseam lengths in increments not greater than 50 mm (2 in.) in the ranges specified in Table 4-1.14.5.

4-1.15.4 Men's and women's sizing shall be accomplished by men's and women's individual patterning.

4-1.16 Additional Design Requirements for Protective Coveralls.

4-1.16.1 That portion of the coverall that corresponds to the coat shall meet all requirements of 4-1.14.

4-1.16.2 That portion of the coverall that corresponds to the trouser shall meet all requirements of 4-1.15.

4-2 Protective Helmet Design Requirements.

4-2.1 A sample helmet shall have at least the applicable design requirements specified in this section where inspected by the certification organization as specified in Section 2-3.

4-2.2 Helmets for proximity fire fighting shall consist of at least the following assembled components: a shell, an energy absorbing system, a retention system, a shroud, and a faceshield.

4-2.2.1 The helmet shall be permitted to have an outer cover to provide the radiant reflective protection for the exterior of the helmet shell, including the upper surface of the brim, and the brim edge.

4-2.2.2 The helmet outer cover shall be permitted to be removable.

4-2.3 There shall be no openings penetrating the shell other than those provided by the manufacturer for mounting energy-absorbing systems, retention systems, and accessories.

4-2.4 The retention system shall include a chin strap and a nape device. The chin strap shall have a minimum width of 20 mm ($^3/_4$ in.).

4-2.5 The faceshield shall be attached to the helmet. The faceshield, when deployed in accordance with its helmet eye/face positioning indexes on an Alderson 50th percentile male headform shown in Figure 6-20.4.1.1 shall provide at least the following field of vision when measured from the center of the eye:

(1) A dihedral angle of at least 85 degrees
(2) An upper dihedral angle of at least 10 degrees
(3) A lower dihedral angle 40 degrees

4-2.6 The helmet with faceshield component(s) stowed shall provide peripheral vision clearance of at least 94 degrees to each side when measured from the center of the eye with the helmet positioned according to its helmet positioning index on the Alderson 50th percentile male headform specified in Figure 6-20.4.1.1.

Table 4-1.14.5 Available Coat/Trouser Size Ranges

	Mens		Womens		Increments	
	mm	in.	mm	in.	mm	in.
Chest	865–1525	34–60	710–1270	28–50	50	2
Sleeve	820–965	32–38	710–865	28–34	25	1
Waist	760–1525	30–60	710–1270	28–50	50	2
Inseam	660–915	26–36	610–865	24–34	50	2

--```,,,-`-`,,`,,`,`,,`---

Copyright National Fire Protection Association
Provided by IHS under license with NFPA
No reproduction or networking permitted without license from IHS
Not for Resale

4-2.7 The helmet shroud component shall be attached to the helmet and shall be designed to cover and provide continuous radiant reflective protection for the head, face, and neck areas that do not receive primary protection from the helmet, faceshield, or the self-contained breathing apparatus (SCBA) facepiece.

4-2.7.1 The shroud component shall be permitted to be a part of a helmet outer cover, where provided.

4-2.7.2 Specimens of shrouds shall be measured to determine the areas of coverage. The helmet with shroud shall be donned properly in the position in which it is intended to be worn on an ISO size J reference headform. In this position, the shroud shall provide a minimum coverage on each side measured downward from the reference plane at the coronal plane of 230 mm ($9^1/_8$ in.), shall provide a minimum coverage in the back measured downward from the reference plane at the rear mid-sagittal plane of 330 mm (13 in.), and shall provide a minimum coverage in the front measured downward from the reference plane at the front midsagittal plane, including the gap of material where the face opening is located, of 295 mm ($11^5/_8$ in.).

4-2.7.3 The shroud shall be designed with a face opening. Other than where the shroud face opening is designed to interface with a specific SCBA facepiece or where the shroud face opening is designed to be adjustable, the shroud face opening shall measure 140 mm, +0/–25 mm ($5^5/_8$ in., +0/–1 in.) in any direction when the shroud is laid out in a relaxed condition on a flat surface, smoothed out, and with the face opening facing up.

4-2.7.4 Where the shroud face opening is designed to interface with a specific SCBA facepiece, the shroud face opening shall overlap the outer edge of the specific SCBA facepiece-to-face seal perimeter by not less than 13 mm ($^1/_2$ in.).

4-2.7.5 Where the shroud face opening is provided with manual adjustment, the shroud face opening shall be adjustable to achieve a face opening of 140 mm ($5^5/_8$ in.).

4-2.7.6 The helmet shroud, when deployed, shall provide peripheral vision clearance of at least 85 degrees to each side of the midsagittal plane, an angle of at least 7 degrees above the reference plane, and an angle of at least 40 degrees under the basic plane when seated according to its helmet positioning index on the reference headform illustrated in Figure 6-20.4.1.1.

4-2.7.7 Shrouds shall not overlap or obscure vision areas as defined in 4-2.5 and 4-2.6.

4-2.8 The helmet, and helmet outer cover where provided, shall be permitted to have fluorescent and retroreflective trim on the helmet exterior and on the helmet outer cover.

4-2.9 Identification markings or material including, but not limited to, trim, lettering, patches, name or number stencils, emblems, and paint shall be permitted only on the helmet outer cover, provided such materials are located above the corresponding helmet test line. The corresponding helmet with the outer cover and markings attached shall meet the requirements specified in 5-2.23.

4-2.10 Where helmets are provided with an SCBA facepiece that is attached or integrated with the helmet, the helmet, with the SCBA facepiece installed, shall meet all applicable design and performance requirements of this standard.

4-3 Protective Glove Design Requirements.

4-3.1 A sample glove shall have at least the applicable design requirements specified in this section where inspected by the certification organization as specified in Section 2-3.

4-3.2 The sample glove shall consist of a composite meeting the performance requirements of Section 5-3. This composite shall be permitted to be configured as a continuous or joined single layer or as continuous or joined multiple layers.

4-3.3 The sample glove body shall extend circumferentially not less than 50 mm (2 in.) beyond the wrist crease where measured from the tip of the middle finger. The location of the wrist crease shall be determined as shown in Figure 4-3.3.

FIGURE 4-3.3 Anatomical landmarks at base of hand.

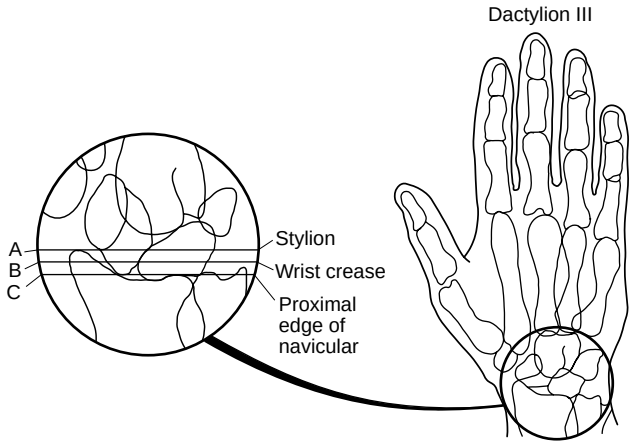

4-3.4 Sample gloves shall be permitted to be provided with either a gauntlet or a glove wristlet. Where gloves are provided with a gauntlet or a glove wristlet, the sample glove body and the gauntlet or glove wristlet shall extend circumferentially at least 75 mm (3 in.) beyond the wrist crease. Where gloves are not provided with a gauntlet or a glove wristlet, the sample glove body shall extend circumferentially at least 75 mm (3 in.) beyond the wrist crease, an increase of 25 mm (1 in.) to the requirement specified in 4-3.3.

4-3.5 The protective glove shall not be permitted to have any hardware.

4-3.6 The outer shell of the back of the glove body including the back of the digits shall be a radiant reflective material.

4-3.6.1 The fingers, thumb, and the back shall have radiant reflective protection of 210 degrees, +20°/–0°. The radiant reflective material shall provide coverage from 0 degrees to 105 degrees, +10°/–0° and then from 255 degrees, +10°/–0° to 360 degrees as specified in Figure 4-3.6.1.

4-3.6.2 The radiant reflective material shall provide coverage for the finger/thumb tip of at least 195 degrees, +10°/–0° as specified in Figure 4-3.6.1. The portion of the finger, thumb, and palm surfaces that are not covered by the radiant reflective protection shall be the gripping surface of the glove.

Copyright National Fire Protection Association
Provided by IHS under license with NFPA
No reproduction or networking permitted without license from IHS
Not for Resale

FIGURE 4-3.6.1 Glove radiant reflective protection areas.

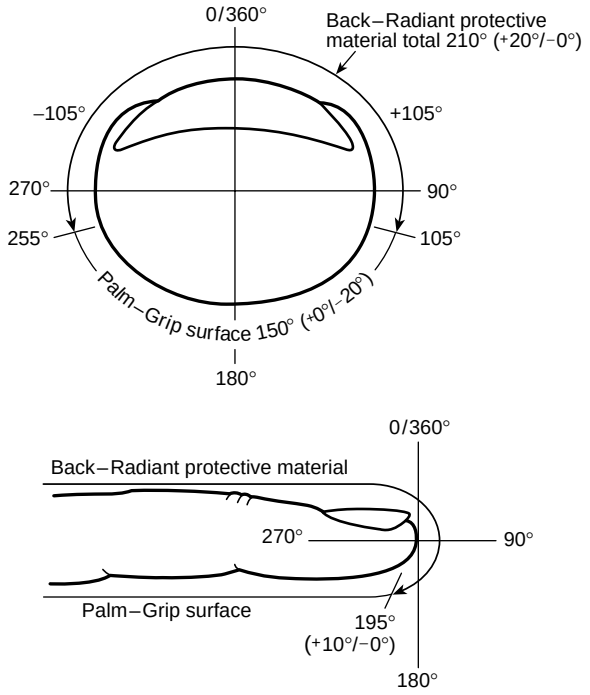

4-3.7 Glove Sizing.

4-3.7.1 Hand dimensions for selection of proper glove size shall consist of measuring the following two dimensions, as shown in Figure 4-3.7.1:

(1) Hand circumference
(2) Length of the hand

FIGURE 4-3.7.1 Method of measuring hand dimensions for selection of proper glove.

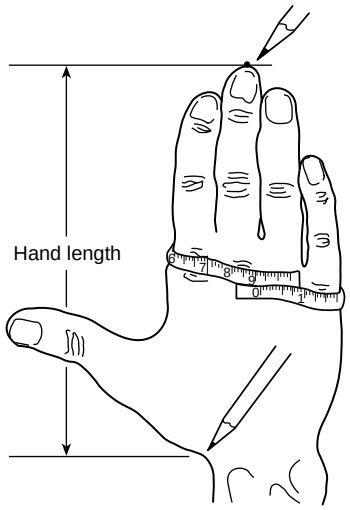

4-3.7.1.1 Hand circumference shall be measured by placing a measuring tape on a table or other flat surface with the numerals facing downward. The subject shall place the right hand, palm down and fingers together, in the middle of the tape so that the tape can pass straight across the metacarpal knuckles. The circumference shall be measured to the nearest 3 mm ($^1/_8$ in.), as shown in Figure 4-3.7.1.

4-3.7.1.2 Finger circumference shall be measured at the proximal interphalangeal joint (first knuckle). Finger length shall be measured from the tip of the finger to the base of the finger crease on the palm side.

4-3.7.1.3 Hand length shall be measured by placing the subject's hand, palm down, on a piece of paper with the fingers together and the hand and arm in a straight line. The thumb shall be fully abducted, extended away from the palm as far as possible. The paper shall be marked at the tip of the third, or middle, finger. A pencil mark shall be placed in the notch at the base of the thumb where the thumb joins the wrist. The straight line distance between the two points shall be measured to the nearest 3 mm ($^1/_8$ in.), as shown in Figure 4-3.7.1.

4-3.7.2 To label or otherwise represent a glove as compliant with the requirements of this standard, the manufacturer shall provide gloves in not less than five separate and distinct sizes. The manufacturer shall provide gloves that at least fit the hand dimension ranges specified in 4-3.7.3.

4-3.7.3* The glove size indicated on the label shall be determined by the hand dimensions given in Tables 4-3.7.3(a) through (e).

Table 4-3.7.3(a) Sizing for Extra Small (XS) Glove

	mm	in.
Range for hand length	16.25–17.25	6.40–6.79
Range for hand circumference	16.25–20.25	6.40–7.97

	Mid-Size Value		Range to Be Accommodated	
	mm	in.	mm	in.
Digit 1 circumference	62	2.43	56–67	2.20–2.65
Digit 2 circumference	61	2.39	55–66	2.17–2.61
Digit 3 circumference	61	2.39	55–66	2.18–2.61
Digit 4 circumference	57	2.24	51–63	2.02–2.46
Digit 5 circumference	50	1.97	45–55	1.76–2.17
Digit 1 length	49	1.94	44–55	1.72–2.17
Digit 2 length	64	2.54	58–71	2.26–2.80
Digit 3 length	73	2.87	67–79	2.64–3.10
Digit 4 length	68	2.67	61–74	2.41–2.92
Digit 5 length	51	2.00	45–57	1.78–2.23
Hand circumference	183	7.19	16.34–201	6.43–7.94
Hand length	168	6.59	163–172	6.41–6.78

Copyright National Fire Protection Association
Provided by IHS under license with NFPA
No reproduction or networking permitted without license from IHS
Not for Resale

Table 4-3.7.3(b) Sizing for Small (S) Glove

	mm	in.
Range for hand length	173–183	6.79–7.19
Range for hand circumference	173–213	6.79–8.37

	Mid-Size Value		Range to Be Accommodated	
	mm	in.	mm	in.
Digit 1 circumference	64	2.52	58–70	2.29–2.74
Digit 2 circumference	63	2.48	57–69	2.26–2.70
Digit 3 circumference	63	2.48	58–69	2.27–2.70
Digit 4 circumference	59	2.33	54–65	2.11–2.56
Digit 5 circumference	52	2.06	47–57	1.85–2.26
Digit 1 length	53	2.09	47–59	1.87–2.32
Digit 2 length	69	2.71	62–76	2.44–2.98
Digit 3 length	77	3.04	71–83	2.81–3.27
Digit 4 length	72	2.83	66–70	2.58–3.08
Digit 5 length	54	2.14	49–60	1.92–2.37
Hand circumference	193	7.58	173–212	6.83–8.33
Hand length	178	6.99	173–182	6.80–7.18

Table 4-3.7.3(c) Sizing for Medium (M) Glove

	mm	in.
Range for hand length	183–193	7.19–7.58
Range for hand circumference	183–223	7.19–8.76

	Mid-Size Value		Range to Be Accommodated	
	mm	in.	mm	in.
Digit 1 circumference	70	2.76	64–77	2.50–3.01
Digit 2 circumference	68	2.69	63–73	2.48–2.88
Digit 3 circumference	68	2.69	63–74	2.46–2.91
Digit 4 circumference	63	2.50	58–69	2.28–2.72
Digit 5 circumference	56	2.22	51–62	2.00–2.43
Digit 1 length	56	2.22	50–63	1.97–2.46
Digit 2 length	71	2.80	65–77	2.56–3.04
Digit 3 length	81	3.18	76–86	2.97–3.38
Digit 4 length	76	3.00	71–81	2.81–3.18
Digit 5 length	58	2.28	52–64	2.03–2.52
Hand circumference	203	7.97	183–222	7.22–8.72
Hand length	188	7.38	183–192	7.19–7.57

Table 4-3.7.3(d) Sizing for Large (L) Glove

	mm	in.
Range for hand length	19.25–20.25	7.58–7.97
Range for hand circumference	19.25–23.25	7.58–9.15

	Mid-Size Value		Range to Be Accommodated	
	mm	in.	mm	in.
Digit 1 circumference	73	2.86	66–79	2.61–3.11
Digit 2 circumference	70	2.77	65–75	2.57–2.97
Digit 3 circumference	71	2.80	65–77	2.57–3.02
Digit 4 circumference	66	2.60	60–72	2.38–2.82
Digit 5 circumference	59	2.30	53–64	2.09–2.52
Digit 1 length	59	2.31	52–65	2.06–2.56
Digit 2 length	75	2.95	69–81	2.71–3.19
Digit 3 length	85	3.36	80–91	3.16–3.57
Digit 4 length	80	3.16	76–85	2.98–3.35
Digit 5 length	61	2.41	55–68	2.17–2.66
Hand circumference	212	8.37	193–232	7.61–9.12
Hand length	198	7.78	193–202	7.59–7.96

Table 4-3.7.3(e) Sizing for Extra-Large (XL) Glove

	mm	in.
Range for hand length	203–213	7.97–8.37
Range for hand circumference	203–243	7.97–9.55

	Mid-Size Value		Range to Be Accommodated	
	mm	in.	mm	in.
Digit 1 circumference	75	2.96	69–82	2.70–3.21
Digit 2 circumference	73	2.85	67–78	2.65–3.06
Digit 3 circumference	74	2.90	68–79	2.67–3.12
Digit 4 circumference	69	2.70	63–74	2.48–2.92
Digit 5 circumference	61	2.39	55–66	2.17–2.60
Digit 1 length	61	2.41	55–68	2.16–2.66
Digit 2 length	79	3.09	73–85	2.86–3.33
Digit 3 length	90	3.55	85–95	3.35–3.76
Digit 4 length	84	3.32	80–89	3.14–3.51
Digit 5 length	65	2.55	59–71	2.30–2.80
Hand circumference	223	8.76	203–242	8.01–9.51
Hand length	208	8.17	203–212	7.98–8.36

4-4 Proximity Protective Footwear Design Requirements.

4-4.1 Sample footwear shall have at least the applicable design requirements specified in this section where inspected by the certification organization as specified in Section 2-3.

4-4.2 Footwear shall consist of a sole with heel, upper with lining, and insole with a puncture-resistant device, ladder shank, and an impact- and compression-resistant toe cap permanently attached.

4-4.3 Footwear height shall be a minimum of 305 mm (12 in.). The height shall be determined by measuring inside the boot from the center of the insole at the heel up to a perpendicular reference line extending across the width of the boot at the lowest point of the top line. Removable insole inserts shall be removed prior to measurement.

4-4.4 The footwear heel breast shall not be less than 13 mm ($^1/_2$ in.) nor more than 25 mm (1 in.). The heel breasting angle shall not be less than 90 degrees nor more than 135 degrees. The edges shall not be less than, or extend more than, 13 mm ($^1/_2$ in.) laterally from the upper at any point. The width of the footwear heel shall be equal to or greater than the width of the sole, excluding any calendar roll if present, at the intersection of the heel breast and the sole bottom.

4-4.5 The puncture-resistant device shall cover the maximum area of the insole.

4-4.6 Metal parts shall not penetrate from the outside into the lining or insole at any point.

Copyright National Fire Protection Association
Provided by IHS under license with NFPA
No reproduction or networking permitted without license from IHS
Not for Resale

4-4.7 No metal parts, including but not limited to nails or screws, shall be present or used in the construction or attachment of the sole with heel to the puncture-resistant device, insole, or upper.

4-4.8 Footwear Sizing.

4-4.8.1 Protective footwear shall be available in all of the following sizes:

(a) *Men's sizes.* 7–16, including half-sizes and a minimum of three widths

(b) *Women's sizes.* 5–10, including half-sizes and a minimum of three widths.

4-4.8.2* Manufacturers shall be required to establish and provide upon request a size conversion chart for each model or style of protective footwear based on toe length, arch length, and foot width as measured on the Brannock Scientific Foot Measuring Device.

4-4.8.3 Full and half-sizes, in each of the three required widths, shall be accomplished by individual and unique lasts to provide proper fit.

4-5 Protective Wristlet Interface Component Design Requirements.

4-5.1 A sample wristlet shall have at least the applicable design requirements specified in this section where inspected by the certification organization specified in Section 2-3.

4-5.2 The wristlet shall be designed to cover and provide limited protection to the wrist areas.

4-5.3 The wristlet shall be permanently attached to the protective coat sleeve in a manner that will not permit a gap in the thermal protection.

4-6 Accessory Design Requirements.

4-6.1 Any accessories attached to any element of the proximity protective ensemble shall not interfere with the function of the element or with the function of any of the element's component parts.

4-6.2 Any accessories attached to any element of the proximity protective ensemble shall not degrade the designed protection or performance of the element below the requirements of this standard.

Chapter 5 Performance Requirements

5-1 Proximity Protective Garment Performance Requirements.

5-1.1 The garment outer shell shall be tested for radiant reflective capability as specified in Section 6-10, Radiant Reflective Test II, and shall have a radiant reflective value of not less than 20 seconds.

5-1.2 The garment outer shell shall be tested for resistance to delamination as specified in Section 6-31, Wet Flex, and shall show no signs of cracking on the face or delamination if the base fabric is a laminate.

5-1.3 The garment outer shell shall be tested for adhesion durability as specified in Section 6-32, Adhesion After Wet Flex–Tape Method, and shall show no evidence of separation of the coating or laminate from the base cloth.

5-1.4 The garment outer shell shall be tested for flex durability as specified in Section 6-33, Flex at Low Temperature, and shall show no evidence of breaking, shattering, or cracking of the coating, laminate, or fabric.

5-1.5 The garment outer shell shall be tested for blocking durability as specified in Section 6-34, Resistance to High-Temperature Blocking, and shall show no blocking.

5-1.6 The garment composite consisting of outer shell, moisture barrier, and thermal barrier shall be tested for thermal insulation as specified in Section 6-13, Thermal Protective Performance (TPP) Test, and shall have an average thermal protective performance (TPP) of not less than 35.0.

5-1.7 The garment composite shall be tested for overall liquid penetration resistance as specified in Section 6-52, Whole Garment Liquid Penetration Test, and shall allow no liquid penetration.

5-1.8 Garment outer shells, moisture barriers, thermal barriers, collar linings, winter liners where provided, and other materials used in garment construction including, but not limited to, padding, reinforcement, interfacing, binding, hanger loops, emblems, and patches shall be individually tested for resistance to flame as specified in Section 6-2, Flame Resistance Test One, and shall not have a char length of more than 100 mm (4 in.) average, shall not have an afterflame of more than 2 seconds average, and shall not melt or drip.

5-1.8.1 Labels shall be tested as specified in 5-1.8 only when placed on the exterior of the garment; zippers and seam sealing materials shall be tested as specified in 5-1.8 only if placed on the exterior of the garment or if they directly contact the wearer's body; and elastic and hook and pile fasteners shall be tested as specified in 5-1.8 only if they directly contact the wearer's body.

5-1.8.2 Small specimens such as hanger loops and emblems (patches), which are not large enough to meet the specimen size requirements in 6-2.2.1, shall be tested for resistance to flame as specified in Section 6-2, Flame Resistance Test One, and shall not be totally consumed, shall not have an afterflame of more than 2 seconds average, and shall not melt or drip.

5-1.9 Garment outer shells, moisture barriers, thermal barriers, winter liners where provided, and collar linings shall be individually tested for resistance to heat as specified in Section 6-6, Heat and Thermal Shrinkage Resistance Test, and shall not shrink more than 10.0 percent in any direction.

5-1.10 Garment outer shells, moisture barriers, thermal barriers, collar linings, winter liners where provided, lettering, and other materials used in garment construction — including, but not limited to, padding, reinforcement, labels, interfacing, binding, hanger loops, emblems or patches; but excluding elastic and hook and pile fasteners where these items are placed so that they will not directly contact the wearer's body — shall be individually tested for resistance to heat as specified in Section 6-6, Heat and Thermal Shrinkage Resistance Test, and shall not melt, separate, or ignite.

5-1.11 Garment moisture barrier seams shall be individually tested for resistance to heat as specified in Section 6-6, Heat and Thermal Shrinkage Resistance Test, and shall not drip or ignite.

5-1.12 Garment outer shells and collar linings shall be individually tested for resistance to heat as specified in Section 6-6, Heat and Thermal Shrinkage Resistance Test, and shall not char.

5-1.13 Garment hardware, other than hook and pile fasteners where placed so that they will not directly contact the wearer's body, shall be individually tested for resistance to heat as spec-

Copyright National Fire Protection Association
Provided by IHS under license with NFPA
No reproduction or networking permitted without license from IHS
Not for Resale

ified in Section 6-6, Heat and Thermal Shrinkage Resistance Test, and shall not ignite and shall remain functional.

5-1.14 All sewing thread used in the construction of garments shall be made of an inherently flame-resistant fiber and shall be tested for resistance to melting as specified in Section 6-14, Thread Melting Test, and shall not melt below 260°C (500°F).

5-1.15 Garment outer shells and collar linings shall be individually tested for resistance to tearing as specified in Section 6-15, Tear Resistance Test, and shall have a tear strength of not less than 98N (22 lbf).

5-1.16 Garment moisture barriers, thermal barriers, and winter liners, where provided, shall be tested for resistance to tearing as specified in Section 6-15, Tear Resistance Test, and shall have a tear strength of not less than 22 N (5 lbf). Where configured as individual barrier layers, specimens of garment moisture barriers, thermal barriers, and winter liners, where provided, shall be individually tested. Where one or more of these barriers are configured as a single barrier layer by bonding or laminating individual barriers together so that the individual layers do not retain their individuality and are not separable, they shall be tested as a composite.

5-1.17 All garment seam assemblies shall be tested for strength as specified in Section 6-17, Seam Breaking Strength Test.

5-1.17.1 Garment seam assemblies shall demonstrate a sewn seam strength equal to or greater than 675 N (150 lbf) force for Major A seams, 337.5 N (75 lbf) force for Major B seams, and 180 N (40 lbf) force for minor seams when tested using the method specified in 6-17.2.2.1.

5-1.17.2 Seam breaking strength shall be considered acceptable when the fabric strength is less than the required seam strength specified in 5-1.17.1 of this section, providing the fabric fails without failure of the seam below the applicable forces specified in 5-1.17.1.

5-1.17.3 All combination woven and knit or stretch knit seam specimens shall meet the requirements specified in 5-1.17.1.

5-1.18 Garment moisture barriers shall be tested for resistance to water penetration as specified in Section 6-28, Water Penetration Test, and shall have a minimum water penetration resistance of 1.76 kg/cm^2 (25 psi) when tested as specified in 6-28.4.1.

5-1.19* Garment moisture barrier materials and seams shall be tested for resistance to liquids penetration as specified in Section 6-29, Liquid Penetration Resistance Test, and shall show no penetration of the test liquids for at least 1 hour.

5-1.20 Garment moisture barriers and moisture barrier seams shall be tested for resistance to liquid borne or blood borne pathogens as specified in Section 6-30, Viral Penetration Resistance Test, and shall allow no penetration of the Phi-X-174 bacteriophage for at least 1 hour.

5-1.21 Garment moisture barriers, thermal barriers, winter liners where provided, and collar linings shall be individually tested for resistance to shrinkage as specified in Section 6-27, Cleaning Shrinkage Resistance Test, and shall not shrink more than 5 percent in any direction.

5-1.22 The garment composite from the shoulder areas and the knee areas shall be tested for resistance to heat transfer as specified in Section 6-12, Conductive and Compressive Heat Resistance Test (CCHR), and shall have a minimum CCHR rating of 13.5 for the shoulder areas and for the knee areas.

5-1.23 All garment metal hardware and all garment hardware that includes metal parts shall be individually tested for resistance to corrosion as specified in Section 6-35, Corrosion Resistance Test. Metals inherently resistant to corrosion including, but not limited to, stainless steel, brass, copper, aluminum, and zinc shall show no more than light surface-type corrosion or oxidation and shall remain functional. Ferrous metals shall show no corrosion of the base metal and shall remain functional.

5-1.24 Labels shall be tested for durability and legibility as specified in Section 6-47, Label Durability and Legibility Test One, and shall remain in place and shall be legible.

5-2 Proximity Protective Helmet Performance Requirements.

5-2.1 Helmet outer covers, where provided, and shrouds shall be tested for radiant reflective capability as specified in Section 6-10, Radiant Reflective Test Two, and shall have a radiant reflective value of not less than 20 seconds.

5-2.2 Helmet outer covers, where provided, and shrouds shall be tested for resistance to delamination as specified in Section 6-31, Wet Flex, and shall show no signs of cracking on the face or delamination if the base fabric is a laminate.

5-2.3 Helmet outer covers, where provided, and shrouds shall be tested for adhesion durability as specified in Section 6-31, Wet Flex, and shall show no evidence of separation of the coating or laminate from the base cloth.

5-2.4 Helmet outer covers, where provided, and shrouds shall be tested for flex durability as specified in Section 6-33, Flex at Low Temperature, and shall show no evidence of breaking, shattering, or cracking of the coating, laminate, or fabric.

5-2.5 Helmet outer covers, where provided, and shrouds shall be tested for blocking durability as specified in Section 6-34, Resistance to High-Temperature Blocking, and shall show no blocking.

5-2.6 The helmet shroud composite consisting of outer shell, moisture barrier, and thermal barrier shall be tested for thermal insulation as specified in Section 6-13, Thermal Protective Performance (TPP) Test, and shall have an average thermal protective performance (TPP) of not less than 35.0.

5-2.7 Helmet shrouds shall be individually tested for resistance to tearing as specified in Section 6-15, Tear Resistance Test, and shall have a tear strength of not less than 98 N (22 lbf).

5-2.8 Helmet outer covers, where provided, shall be tested for resistance to tearing as specified in Section 6-15, Tear Resistance Test, and shall have a tear strength of not less than 22 N (5 lbf).

5-2.9 Helmets shall be tested for resistance to impact as specified in Section 6-18, Top Impact Resistance Test (Force), and shall have no sample transmit a force of more than 3780 N (850 lbf).

5-2.10 Helmets shall be tested for resistance to impact as specified in Section 6-19, Impact Resistance Test (Acceleration), and shall have no sample exceed the maximum acceleration specified in Table 5-2.10 Any acceleration duration above 200 Gn shall not exceed 3 milliseconds; acceleration duration above 150 Gn shall not exceed 6 milliseconds.

Copyright National Fire Protection Association
Provided by IHS under license with NFPA
No reproduction or networking permitted without license from IHS
Not for Resale

Table 5-2.10 Impact Testing

Impact Location	Maximum Acceleration*	m · sec/sec	ft · sec/sec
Top	150 × Gn	1471.5	4830
Front	300 × Gn	2943.0	9660
Sides	300 × Gn	2943.0	9660
Back	300 × Gn	2943.0	9660

*Gn denotes gravitational acceleration, which is defined as 9.81 m per second per second (32.2 ft per second per second).

5-2.11 Helmets shall be tested for resistance to penetration as specified in Section 6-22, Physical Penetration Resistance Test, and shall exhibit no electrical or physical contact between the penetration test striker and the headform.

5-2.12 Helmets shall be tested for resistance to heat as specified in Section 6-6, Heat and Thermal Shrinkage Resistance Test, and shall meet the following requirements:

(1) Have no parts of the complete helmet assembly that do not contact the headform before this test come in contact with the headform as a result of this test
(2) Have no shell distortion in the back extend more than 40 mm ($1\,^5/_8$ in.) below the original position of the helmet
(3) Have no distortion of the front and sides of the shell extend more than 30 mm ($1\,^1/_4$ in.) below the original position of the helmet
(4) Have no separation, melting, or dripping of the retention system, energy absorption system, or ear covers
(5) Have a chin strap closure device remain functional
(6) Have no ignition of any part of the helmet assembly
(7) Have no ignition or melting of the product labels
(8) Have no part of the faceshield component that was not below the brim line prior to the test be below the brim line after the test
(9) Have no part of the faceshield component drip

5-2.13 Helmets shall be tested for resistance to flame as specified in Section 6-3, Flame Resistance Test Two, Procedures A and C, and shall not show any visible afterflame or glow 5 seconds after removal from the test flame in each test.

5-2.14 Helmets shall be tested for resistance to electricity as specified in Section 6-36, Electrical Insulation Test One, Procedures A and B, and shall not have leakage current exceeding 3.0 mA in each test.

5-2.15 Helmets shall be tested for retention ability as specified in Section 6-40, Retention System Test, without any break occurring and without any resulting slip or stretch of more than 20 mm ($^3/_4$ in.).

5-2.16 Helmet suspension systems shall be tested for retention ability as specified in Section 6-41, Suspension System Retention Test, and shall not separate from the helmet shell.

5-2.17 Helmets shall be tested for shell retention ability as specified in Section 6-49, Shell Retention Test, and shall not have the helmet shell separate from the helmet suspension and retention systems.

5-2.18 All fabrics used in the construction of helmet shrouds, and helmet outer covers where provided, shall be individually tested for resistance to flame as specified in Section 6-2, Flame Resistance Test One, and shall not have a char length greater than 100 mm (4 in.), shall not show any visible afterflame 2 seconds after removal from the test flame, and shall not melt or drip.

5-2.19 All materials used in the construction of helmet shrouds and helmet outer covers shall be individually tested for resistance to heat as specified in Section 6-6, Heat and Thermal Shrinkage Resistance Test, shall not shrink more than 10 percent in any direction, and shall not melt, drip, separate, char, or ignite.

5-2.20 All sewing thread used in the construction of helmets shall be made of inherently flame-resistant fiber and shall be tested for melting resistance as specified in Section 6-14, Thread Melting Test, and shall not melt below 260°C (500°F).

5-2.21 All helmet metal hardware and all helmet hardware that includes metal parts shall be individually tested for resistance to corrosion as specified in Section 6-35, Corrosion Resistance Test. Metals inherently resistant to corrosion including, but not limited to, stainless steel, brass, copper, aluminum, and zinc shall show no more than light surface-type corrosion or oxidation and shall remain functional. Ferrous metals shall show no corrosion of the base metal and shall remain functional.

5-2.22 Labels shall be tested for durability and legibility as specified in Section 6-48, Label Durability and Legibility Test Two, shall remain in place, and shall be legible.

5-2.23 Helmets shall be tested for radiant reflective value as specified in Section 6-11, Radiant Heat Transmittance Test Three, and shall not have a temperature rise of more than 25°C (45°F).

5-2.24 Helmet faceshield components shall be tested for resistance to impact as specified in Section 6-20, Faceshield Component Impact Resistance Test, Tests One and Two, and shall have no contact with an eye of the headform; nor shall any parts of fragments be ejected from the component that could contact the eye of the headform.

5-2.25 Helmet faceshield components shall be tested for flame resistance as specified in Section 6-3, Flame Resistance Test Two, Procedure B, and shall not show any visible afterflame 5 seconds after removal of the test flame.

5-2.26 Helmet faceshield component lenses shall be tested for transmittance of light as specified in Section 6-50, Luminous (Visible) Transmittance Test, and shall transmit not less than 30 percent of the incident visible radiation.

5-2.27 Helmet faceshields shall be tested for radiant reflective capability as specified in Section 6-10, Radiant Reflective Test Two, and shall have a radiant reflective value of not less than 30 seconds.

5-3 Proximity Protective Glove Performance Requirements.

5-3.1 The back of the hand of the glove, including the gauntlet where provided, shall be tested for radiant reflective capability as specified in Section 6-10, Radiant Reflective Test Two, and shall have a radiant reflective value of not less than 20 seconds.

5-3.2 The back of the hand of the glove, including the gauntlet where provided, shall be tested for resistance to delamination as specified in Section 6-31, Wet Flex, and shall show no signs of cracking on the face or delamination if the base fabric is a laminate.

5-3.3 The back of the hand of the glove, including the gauntlet where provided, shall be tested for adhesion durability as specified in Section 6-31, Wet Flex, and shall show no evidence of separation of the coating or laminate from the base cloth.

Copyright National Fire Protection Association
Provided by IHS under license with NFPA
No reproduction or networking permitted without license from IHS
Not for Resale

5-3.4 The back of the hand of the glove, including the gauntlet where provided, shall be tested for flex durability as specified in Section 6-33, Flex at Low Temperature, and shall show no evidence of breaking, shattering, or cracking of the coating, laminate, or fabric.

5-3.5 The back of the hand of the glove, including the gauntlet where provided, shall be tested for blocking durability as specified in Section 6-34, Resistance to High-Temperature Blocking, and shall show no blocking.

5-3.6 The glove body composite shall be tested for thermal insulation as specified in Section 6-13, Thermal Protective Performance (TPP) Test, and shall have an average thermal protective performance rating (TPP) of not less than 35.0.

5-3.7 Where gauntlets or glove wristlets are provided, the glove gauntlet or glove wristlet composite shall be tested for thermal insulation as specified in Section 6-13, Thermal Protective Performance (TPP) Test, and shall have an average TPP rating of not less than 20.0.

5-3.8 Gloves shall be tested for resistance to heat as specified in Section 6-6, Heat and Thermal Shrinkage Resistance Test, and shall not melt, separate, or ignite; shall not shrink more than 5 percent in length or width; shall be donnable; and shall be flexible.

5-3.9 The innermost separable layer of the glove body composite that is designed to come into contact with the wearer's skin shall be individually tested for resistance to heat as specified in Section 6-6, Heat and Thermal Shrinkage Resistance Test, and shall not melt, separate, or ignite.

5-3.10 The glove body composite shall be tested for thermal insulation as specified in Section 6-7, Conductive Heat Resistance Test One, and shall have a second-degree burn time of not less than 10 seconds and shall have a pain time of not less than 6 seconds.

5-3.11 The glove body composites shall be tested for resistance to flame as specified in Section 6-4, Flame Resistance Test Three, and shall not have a char length of more than 100 mm (4 in.) average and shall not have an afterflame of more than 2 seconds average after removal of the test flame. The composite shall not melt or drip, and the consumed materials shall not exceed 5 percent of the sample specimen's original weight.

5-3.12 Where gauntlets or glove wristlets are provided, the glove gauntlet or glove wristlet composite shall be tested for resistance to flame as specified in Section 6-2, Flame Resistance Test One, and shall not have a char length of more than 100 mm (4 in.) average, shall not have an afterflame of more than 2 seconds average after removal of the test flame, and shall not melt or drip.

5-3.13 All sewing thread used in the construction of gloves, and wristlets or gauntlets, shall be made of an inherently flame-resistant fiber and shall be tested for melting resistance as specified in Section 6-14, Thread Melting Test, and shall not melt below 260°C (500°F).

5-3.14* The glove body composites and seams shall be tested for resistance to liquid or blood-borne pathogens as specified in Section 6-30, Viral Penetration Resistance Test, and shall allow no penetration of the Phi-X-174 bacteriophage for at least 1 hour.

5-3.15* Glove body composites and seams shall be tested for resistance to liquid penetration as specified in Section 6-29, Liquid Penetration Resistance Test, and shall allow no penetration of test liquids for at least 1 hour.

5-3.16 The glove body composite shall be tested for resistance to cut as specified in Section 6-25, Cut Resistance Test, and shall have a cut distance resistance of more than 25 mm (1 in.).

5-3.17 The glove gauntlet or glove wristlet composite, if different from the glove body composite, shall be tested for resistance to cut as specified in Section 6-25, Cut Resistance Test, and shall have a cut distance resistance of more than 25 mm (1 in.).

5-3.18 The glove body composite shall be tested for resistance to puncture as specified in Section 6-23, Puncture Resistance Test One, and shall not be punctured under an average applied force of 4 kg (8.8 lb).

5-3.19 Glove specimens shall be tested for hand function as specified in Section 6-43, Glove Hand Function Test, and shall have an average percent of barehand control not exceeding 300 percent.

5-3.20 Glove knit wristlet material(s) shall be tested for material strength as specified in Section 6-16, Burst Strength Test, and shall have a burst strength of not less than 225 N (50 lbf).

5-3.21 Glove knit wristlet seams shall be tested for seam strength as specified in Section 6-17, Seam Breaking Strength Test, and shall have a breaking strength of not less than 182 N (41 lbf).

5-3.22 Gloves shall be tested for grip as specified in Section 6-44, Grip Test, and shall have a weight-pulling capacity not less than 80 percent of the bare-hand control value.

5-3.23 Gloves shall be tested for resistance to leakage as specified in Section 6-38, Overall Liquid Integrity Test One, and shall show no leakage.

5-3.24* Gloves shall be tested for ease of donning as specified in Section 6-42, Liner Retention Test, and shall have the final donning time not exceed the baseline donning time plus 20 seconds.

5-3.25 Labels shall be tested for durability and legibility as specified in Section 6-49, Label Durability and Legibility Test One, shall remain in place, and shall be legible.

5-4 Protective Footwear Performance Requirements.

5-4.1 Footwear shall be tested for resistance to heat as specified in Section 6-6, Heat and Thermal Shrinkage Resistance Test, and shall not have any part of the footwear melt, separate, or ignite; shall not shrink more than 5 percent in any dimension; and shall have all components remain functional.

5-4.2 Footwear shall be tested for thermal insulation as specified in Section 6-9, Radiant Heat Resistance Test, and the temperature of the lining surface in contact with the skin shall not exceed 44°C (111°F).

5-4.3 Footwear shall be tested for thermal insulation as specified in Section 6-7, Conductive Heat Resistance Test One, and the temperature of the upper lining surface in contact with skin shall not reach 44°C (111°F) in 10 minutes or less.

5-4.4 Footwear shall be tested for thermal insulation as specified in Section 6-8, Conductive Heat Resistance Test Two, and the temperature of the insole surface in contact with the foot shall not exceed 44°C (111°F).

5-4.5 Footwear, with components in place, shall be tested for resistance to flame as specified in Section 6-5, Flame Resis-

--`,,`-`-`,,`,,`,`,,`---

Copyright National Fire Protection Association
Provided by IHS under license with NFPA
No reproduction or networking permitted without license from IHS
Not for Resale

tance Test Four, and shall not have an afterflame of more than 2 seconds, shall not melt or drip, and shall not exhibit any burn-through.

5-4.6 All sewing thread used in the construction of footwear shall be made of an inherently flame-resistant fiber, shall be tested for melting resistance as specified in Section 6-14, Thread Melting Test, and shall not melt below 260°C (500°F).

5-4.7 Footwear shall be tested for resistance to water as specified in Section 6-39, Overall Liquid Integrity Test Two, and shall show no water penetration.

5-4.8 The footwear upper material composite, upper seams, and vamp seams shall be tested for resistance to liquid penetration as specified in Section 6-29, Liquid Penetration Resistance Test, and shall allow no penetration of the test liquids for at least 1 hour.

5-4.9 The footwear upper material composite, upper seams, and vamp seams shall be tested for resistance to liquid or blood-borne pathogens as specified in Section 6-30, Viral Penetration Resistance Test, and shall allow no penetration of the Phi-X-174 bacteriophage for at least 1 hour.

5-4.10 Footwear shall be tested for resistance to puncture as specified in Section 6-23, Puncture Resistance Test One, and shall not puncture the footwear upper under an average applied force of 6 kg (13 lb).

5-4.11 Footwear shall be tested for resistance to puncture as specified in Section 6-24, Puncture Resistance Test Two, and shall not allow puncture through the sole area and the heel area at a force load of less than 1211.6 N (272 lbf).

5-4.12 Footwear shall be tested for resistance to cut as specified in Section 6-25, Cut Resistance Test, and shall have a cut distance resistance of more than 25 mm (1 in.).

5-4.13* Footwear shall be tested for resistance to slipping as specified in Section 6-46, Slip Resistance Test. The soles shall have a static coefficient of 0.75 or greater in a dry condition, and they shall have a static coefficient of 0.50 or greater in a wet condition.

5-4.14 Footwear shall be tested for resistance to abrasion as specified in Section 6-26, Abrasion Resistance Test, and the sole with heel shall have an abrasion index of not less than 100.

5-4.15 Footwear shall be tested for resistance to electricity as specified in Section 6-37, Electrical Insulation Test Two, and shall have no leakage in excess of 5.0 mA.

5-4.16 Footwear toes shall be tested for resistance to impact and compression as specified in Section 6-21, Impact and Compression Tests, shall have an impact requirement of 100 J (74 ft-lb), and shall have a compression requirement of 11,120 N (2500 lbf) with a minimum clearance of at least 13 mm ($^1/_2$ in.).

5-4.17 Footwear ladder shanks shall be tested for resistance to bending as specified in Section 6-45, Ladder Shank Bend Resistance Test, and shall not deflect more than 6 mm ($^1/_4$ in.).

5-4.18 Footwear stud posts and eyelets shall be tested for attachment strength as specified in Section 6-53, Eyelet and Stud Post Attachment Test, and shall have a minimum detachment strength of 294 N (66 lbf).

5-4.19 All footwear metal hardware and all footwear hardware that includes metal parts including, but not limited to, toe cap, ladder shank, puncture-resistant device, and components shall be individually tested for resistance to corrosion as specified in Section 6-35, Corrosion Resistance Test. Metals inherently resistant to corrosion including, but not limited to, stainless steel, brass, copper, aluminum, and zinc shall show no more than light surface-type corrosion or oxidation. Ferrous metals shall show no corrosion of the base metal. All components shall remain functional.

5-4.20 Labels shall be tested for durability and legibility as specified in Section 6-47, Label Durability and Legibility Test One, shall remain in place, and shall be legible to the unaided eye.

5-4.21 Footwear shall be tested for radiant reflective capability as specified in Section 6-10, Radiant Reflective Test Two, and shall have a radiant reflective value of not less than 20 seconds.

5-5 Protective Wristlet Interface Component Performance Requirements.

5-5.1 Wristlets shall be tested for thermal insulation as specified in Section 6-13, Thermal Protective Performance (TPP) Test, and shall have a thermal protective performance (TPP) of not less than 20.0.

5-5.2 Wristlet material(s) shall be individually tested for resistance to flame as specified in Section 6-2, Flame Resistance Test One, and shall not have a char length of more than 100 mm (4 in.) average, shall not have an afterflame of more than 2 seconds average, and shall not melt or drip.

5-5.3 Wristlet material(s) shall be individually tested for resistance to heat as specified in Section 6-6, Heat and Thermal Shrinkage Resistance Test, and shall not shrink more than 10 percent in any direction.

5-5.4 Wristlet material(s) shall be individually tested for resistance to heat as specified in Section 6-6, Heat and Thermal Shrinkage Resistance Test, and shall not melt, separate, or ignite.

5-5.5 Wristlet material(s) shall be individually tested for resistance to shrinkage as specified in Section 6-27, Cleaning Shrinkage Resistance Test, and shall not shrink more than 5 percent in any direction.

5-5.6 All sewing thread used in the construction of wristlets shall be made of an inherently flame-resistant fiber, shall be tested for melting resistance as specified in Section 6-14, Thread Melting Test, and shall not melt below 260°C (500°F).

5-5.7 Knit wristlet material(s) shall be tested for material strength as specified in Section 6-16, Burst Strength Test, and shall have a burst strength of not less than 225 N (50 lbf).

5-5.8 Knit wristlet seams shall be tested for seam strength as specified in Section 6-17, Seam Breaking Strength Test, and shall have a breaking strength of not less than 18.5 kg (41 lb).

Copyright National Fire Protection Association
Provided by IHS under license with NFPA
No reproduction or networking permitted without license from IHS
Not for Resale

Chapter 6 Test Methods

6-1 Sample Preparation Procedures.

6-1.1 Application.

6-1.1.1 The sample preparation procedures contained in this section shall apply to each test method in this chapter, as specifically referenced in the sample preparation section of each test method.

6-1.1.2 Only the specific sample preparation procedure or procedures referenced in the sample preparation section of each test method shall be applied to that test method.

6-1.2 Washing and Drying Procedure for Garment Components, Gloves, Shrouds, and Wristlets.

6-1.2.1 Specimens shall be subjected to five cycles of washing and drying in accordance with the procedure specified in Machine Cycle 1, Wash Temperature V, and Drying Procedure Ai of AATCC 135, *Dimensional Changes in Automatic Home Laundering of Woven and Knit Fabrics*.

6-1.2.2 A laundry bag shall not be used.

6-1.3 Room Temperature Conditioning Procedure for Garments, Helmets, Gloves, Footwear, and Faceshield Components.

6-1.3.1 Garment, glove, and footwear specimens shall be conditioned at a temperature of 21°C, ±3°C (70°F, ±5°F) and a relative humidity of 65 percent, ±5 percent until equilibrium is reached, as determined in accordance with Section 4 of Federal Test Method Standard 191A, *Textile Test Methods*, or for at least 24 hours, whichever is shorter. Specimens shall be tested within 5 minutes after removal from conditioning.

6-1.3.2 Helmet and faceshield component specimens shall be conditioned at a temperature of 21°C, ±3°C (70°F, ±5°F) and a relative humidity of 25 percent to 50 percent. Specimens shall be tested within 5 minutes after removal from conditioning.

6-1.4 Low-Temperature Environmental Conditioning Procedure for Helmets.

6-1.4.1 Sample specimens shall be conditioned by exposing them to a temperature of −32°C, ±1°C (−25°F, ±2°F) for at least 4 hours.

6-1.4.2 The impact/penetration test shall be completed within 15 seconds, ±5 seconds after removal from the cold temperature environment, or the specimens shall be reconditioned before testing.

6-1.5 Convective Heat Conditioning Procedure for Helmets, Gloves, Footwear, Moisture Barriers, Moisture Barrier Seams, and Labels. Samples shall be conditioned by exposing them to the procedures specified in 6-6.4 and in 6-6.5.2 through 6-6.5.5, with the following modifications:

(a) The oven preheat specified in 6-6.4.3 shall be stabilized at 141°C, +6°/−0°C [285°F, +10°/−0°F] for helmets, moisture barriers, and moisture barrier seams.

(b) The oven preheat specified in 6-6.4.3 shall be stabilized at 177°C, +6°/−0°C [350°F, +10°/−0°F] for gloves only.

(c) The specimen exposure time specified in 6-6.5.4 shall begin when the test thermocouple reading remains at 141°C, +6°/−0°C [285°F, +10°/−0°F] for the duration of the test.

(d) The specimen removal and pass/fail inspection specified in 6-6.5.5 and 6-6.5.6 shall be disregarded.

(e) After 10 minutes, +15/−0 seconds, the specimen shall be removed and subjected to the required testing.

(f) For helmet specimens, the required testing shall be performed within 15 seconds, ±5 seconds, or the specimen shall be discarded and a new specimen shall be conditioned and tested as specified in this section.

(g) For glove specimens, the required testing shall be performed within 24 hours, ±1 hour.

6-1.6 Radiant Heat Environmental Conditioning Procedure for Helmets.

6-1.6.1 Sample helmets shall be conditioned by exposing the area to be impacted/penetrated to a radiant heat source. The top, sides, front, and back test areas to be impacted/penetrated shall be as specified in Figure 6-1.6.1.

FIGURE 6-1.6.1 Helmet test areas and landmarks.

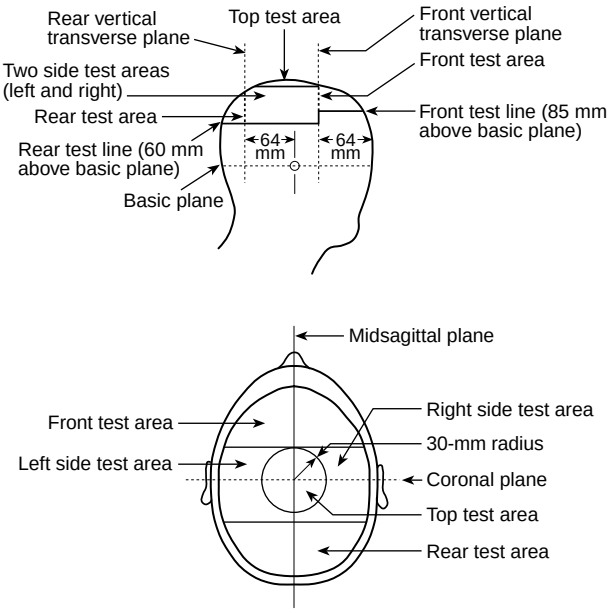

6-1.6.2 The area to be impacted/penetrated shall be exposed to an irradiance of 1.0 W/cm^2, ±0.1 W/cm^2 for a length of time determined by exposure of a radiant heat transducer. The heat source shall be removed and the helmet shall be tested. The helmet shall be impacted/penetrated in 15 seconds, ±5 seconds after removal from the conditioning environment, or the helmet shall be cooled to room temperature and reconditioned before testing.

6-1.6.3 The radiometer shall have a spectral response flat within ±3 percent over a range of at least 1.0 μ to 10.1 μ and an overall accuracy of at least ±5 percent of the reading.

6-1.6.4 The radiant panel shall have an effective radiating surface at least 152 mm, ±6 mm (6 in., ±$^1/_4$ in.) square. The spectral radiant emittance curve of the radiant panel shall be that of a blackbody at a temperature of 1000°K, ±200°K (1340°F, ±360°F).

6-1.6.5 The radiant heat transducer shown in Figure 6-1.6.5 shall be constructed from sheet copper, ASTM B 152, *Specification for Copper Sheet, Strip Plate, and Rolled Bar*, Type 110 ETP, half hard, 0.64 mm, ±0.05 mm (0.025 in., ±0.002 in.) thick and 51 mm, ±0.4 mm (2 in., ±0.02 in.) square. A constantan wire 0.81 mm, ±0.05 mm (0.032 in., ±0.002 in.) in diameter and an

Copyright National Fire Protection Association
Provided by IHS under license with NFPA
No reproduction or networking permitted without license from IHS
Not for Resale

iron wire of the same diameter shall be silver soldered 15 mm, ± 1 mm ($^{9}/_{16}$ in., ± $^{3}/_{64}$ in.) from the edges of the copper sheet on the same side, as shown in Figure 6-1.6.5. The side of the copper sheet opposite that with the wires attached shall be painted flat black. The resulting transducer is a Type J thermocouple that shall be used in conjunction with appropriate instrumentation to monitor the heat exposure to which the helmet is to be subjected.

FIGURE 6-1.6.5 Radiant heat transducer.

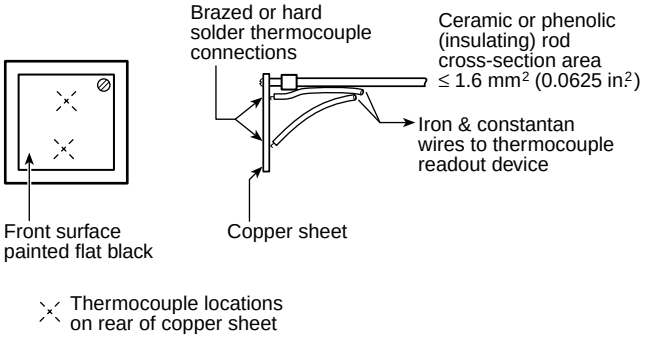

6-1.6.6 Sample helmets shall be mounted in the position to be conditioned. The point of impact or penetration on the helmet shell shall be determined in accordance with the specific test to be performed. The helmet shall be removed temporarily, and a radiometer shall be located at that point perpendicular to and facing away from the helmet surface.

6-1.6.7 The radiant panel shall be introduced in front of the radiometer with its effective radiating surface parallel to the plane tangent to the helmet surface at the center of the impact/penetration site on the helmet. The radiant panel shall be adjusted to obtain a stable uniform irradiance of 1.0 W/cm^2, ±0.1 W/cm^2 over a minimum 76-mm (3-in.) diameter circle located on the above plane and centered at the center of impact or penetration. Stability shall be achieved when the irradiance changes by less than 10 percent during a 3-minute period.

6-1.6.8* The radiometer shall be replaced with the radiant heat transducer. The center of the transducer shall be positioned with its center coincident with the center of the impact/penetration site on the helmet and parallel to the plane tangent to the helmet surface at that point. The flat black surface of the transducer shall face the radiant panel. The time required for the transducer to reach a temperature of 260°C (500°F) shall be recorded. That time shall be 2$^{1}/_{2}$ minutes, ±15 seconds. A closed insulated chamber shall be required to achieve this exposure time.

6-1.6.9 The chamber and helmet shall be stabilized at 25°C, ±5°C (77°F, ±9°F). The helmet shall be positioned in the chamber in the same position specified in 6-1.6.6. The helmet shall be subjected to the exposure conditions specified in 6-1.6.1 for the time recorded in 6-1.6.8. The exposure time shall be not less than the time recorded in 6-1.6.8 nor more than 5 seconds longer than that time.

6-1.7 Wet Conditioning Procedure for Helmets and Faceshield Component.

6-1.7.1 Sample specimens shall be conditioned by immersing them in water at a temperature of 20°C to 28°C (68°F to 82°F) for at least 4 hours but not more than 24 hours.

6-1.7.2 The specimen shall be tested within 10 minutes after removal from water.

6-1.8 Wet Conditioning Procedure for Gloves.

6-1.8.1 Specimens shall be conditioned by complete immersion in water at a temperature of 21°C, ±3°C (70°F, ±5°F) for 2 minutes, +30/−0 seconds.

6-1.8.2 Specimens shall be removed from water, hung in a vertical position, fingertips up, for 5 minutes, +30/−0 seconds, and laid horizontally with AATCC textile blotting paper both under and over the specimen under a weight of 0.0020 kg/cm^2, ±0.0002 kg/cm^2 (0.50 psi, ±0.05 psi) for a period of 20 minutes, ±30 seconds in accordance with paragraph 7.2 of AATCC 70, *Test Method for Water Repellency: Tumble Jar Dynamic Absorption Test.*

6-1.9 Wet Conditioning Procedure for Footwear.

6-1.9.1 Where indicated, samples shall be preconditioned by immersion in tap water of 21°C (70°F) for 1 hour, ±5 minutes.

6-1.9.2 Samples shall be drained upside down for 5 minutes, +0/−30 seconds.

6-1.9.3 Testing shall be done 5 minutes, ±30 seconds after draining.

6-1.10 Flexing Procedure for Gloves.

6-1.10.1 Glove specimens shall be selected to fit the individual test subject.

6-1.10.2 The test subject shall don the glove specimen and shall flex the glove specimen by making a tight fist 10 times during a 30-second period.

6-2 Flame Resistance, Test One.

6-2.1 Application.

6-2.1.1 This test method shall apply to proximity protective garment textiles, wristlets, gauntlets, helmet outer covers, shrouds, and faceshields.

6-2.1.2 Modifications to this test method for testing woven textile materials shall be as specified in 6-2.8.

6-2.1.3 Modifications to this test method for testing knit textile materials shall be as specified in 6-2.9.

6-2.1.4 Modifications to this test method for testing nonwoven textile materials shall be as specified in 6-2.10.

6-2.1.5 Modifications to this test method for testing small specimens not meeting the specimen size requirements in 6-2.2.1 shall be tested as specified in 6-2.11.

6-2.2 Specimens.

6-2.2.1 Specimens shall consist of a 75-mm × 300-mm (3-in. × 12-in.) rectangle with the long dimension parallel either to the warp or the filling, to the wale or coarse, or to the machine or cross-machine direction of the material.

6-2.2.2 Each separable layer of multilayer material systems or composites shall be individually tested.

6-2.3 Sample Preparation.

6-2.3.1 Specimens shall be tested both before and after being subjected to the procedure specified in 6-1.2.

Copyright National Fire Protection Association
Provided by IHS under license with NFPA
No reproduction or networking permitted without license from IHS
Not for Resale

6-2.3.2 All specimens to be tested shall be conditioned as specified in 6-1.3.

6-2.4 Apparatus. The test apparatus specified in Method 5903.1, "Flame Resistance of Cloth; Vertical," of Federal Test Method Standard 191A, *Textile Test Methods*, shall be used.

6-2.5 Procedure.

6-2.5.1 Flame resistance testing shall be performed in accordance with Method 5903.1, "Flame Resistance of Cloth; Vertical," of Federal Test Method Standard 191A, *Textile Test Methods*.

6-2.5.2 Each specimen shall be examined for evidence of melting or dripping.

6-2.6 Report.

6-2.6.1 Afterflame time and char length shall be reported for each specimen. The average afterflame time and char length for each material in each direction tested shall be calculated and reported. The afterflame time shall be reported to the nearest 0.2 second and the char length to the nearest 3 mm ($^1/_8$ in.).

6-2.6.2 Observations of melting or dripping for each specimen shall be reported.

6-2.7 Interpretation.

6-2.7.1 Pass/fail performance shall be based on any observed melting or dripping, the average afterflame time, and the average char length.

6-2.7.2 Failure in either direction shall constitute failure of the material.

6-2.8 Specific Requirements for Testing Woven Textile Materials.

6-2.8.1 Five specimens from each of the warp and filling directions shall be tested. No two warp specimens shall contain the same warp yarns, and no two filling specimens shall contain the same filling yarns.

6-2.8.2 Samples for conditioning shall be at least 1 m (1 yd) square of each material.

6-2.8.3 Testing shall be performed as specified in 6-2.2 through 6-2.7.

6-2.9 Specific Requirements for Testing Knit Textile Materials.

6-2.9.1 Five specimens from each of the wale and course directions shall be tested.

6-2.9.2 Samples for conditioning shall include material that is a minimum of 75 mm × 300 mm (3 in. × 12 in.).

6-2.9.3 Testing shall be performed as specified in 6-2.2 through 6-2.7.

6-2.10 Specific Requirements for Testing Nonwoven Textile Materials.

6-2.10.1 Five specimens from each of the machine and cross-machine directions shall be tested.

6-2.10.2 Samples for conditioning shall include material that is a minimum of 75 mm × 305 mm (3 in. × 12 in.).

6-2.10.3 Testing shall be performed as specified in 6-2.2 through 6-2.7.

6-2.11 Specific Requirements for Testing Small Specimens.

6-2.11.1 Five specimens attached to the textile layer as used in the proximity protective garments shall be tested. The specimens shall be attached to the textile layer such that the bottom edge of the item coincides with the bottom edge of the textile support layer.

6-2.11.2 Samples for conditioning shall be at least 1 m (1 yd) square of the textile layer on which the small specimens are attached.

6-2.11.3 Testing shall be performed as specified in 6-2.2 through 6-2.7. Char length shall not be measured.

6-3 Flame Resistance, Test Two.

6-3.1 Application. This test method shall apply to protective helmets and faceshields.

6-3.2 Specimens. Specimens shall be selected as specified in 2-3.12.

6-3.3 Sample Preparation. No sample conditioning shall be performed.

6-3.4 Apparatus.

6-3.4.1 A standard Bunsen burner shall be used.

6-3.4.2 The Bunsen burner shall be fueled by a bottled methane gas, lab grade or better, of 3.72×10^7 J/m^3, $\pm 1.8 \times 10^6$ J/m^3 (1000 Btu/ft^3, ±50 Btu/ft^3).

6-3.4.3 A control valve system with a delivery rate designed to furnish gas to the burner under a pressure of 0.0020 kg/cm^2, +0.0004/−0.0 kg/cm^2 (0.5 psi, +0.1/−0.0 psi) at the burner shall be utilized.

6-3.4.4 The barrel of the Bunsen burner shall be 12 mm, ±3 mm ($^1/_2$ in., $\pm^1/_8$ in.) in diameter. A flame spreader shall not be used.

6-3.5 Procedure A.

6-3.5.1 Sample helmets shall be seated on the ISO size J headform specified in Figure 6-19.4.1 and shall be positioned according to the helmet's positioning index. The test setup shall be as shown in Figure 6-3.5.1.

FIGURE 6-3.5.1 Test Procedure A.

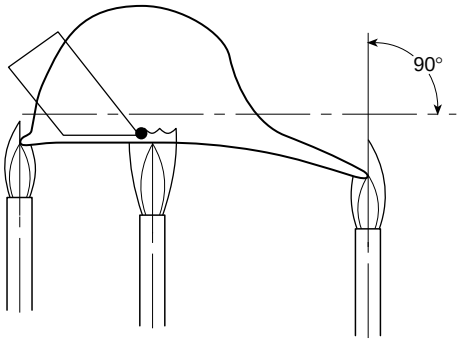

6-3.5.2 The tip of the inner cone of a Bunsen burner flame of 25 mm to 38 mm (1 in. to $1^1/_2$ in.) in length shall be placed at the outer edge of the helmet shell at the front, sides, and rear. Where a helmet hanger is provided, the test flame shall be applied off the edge of the helmet hanger at the shell edge.

6-3.5.3 After 15 seconds, +1/−0 second, the flame shall be removed and the duration of the afterflame and afterglow shall be measured.

Copyright National Fire Protection Association
Provided by IHS under license with NFPA
No reproduction or networking permitted without license from IHS
Not for Resale

6-3.6 Procedure B.

6-3.6.1 Specimens of faceshield components shall be attached to an appropriate test fixture so that the lower edge of the specimen is exposed. The test setup shall be as shown in Figure 6-3.6.1.

FIGURE 6-3.6.1 Test Procedure B.

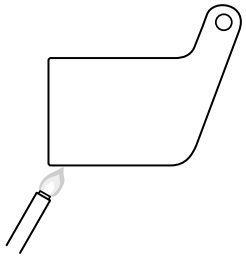

6-3.6.2 The tip of the inner cone of a Bunsen burner flame 25 mm to 38 mm (1 in. to $1^1/_2$ in.) in length shall be placed on the outer edge of the specimen at the lowest exposed edge of the specimen. The burner shall be held to the test point of the specimen at an angle of 45 degrees, ±10 degrees.

6-3.6.3 After 15 seconds, +1/−0 second, the flame shall be removed and the duration of afterflame and afterglow shall be measured.

6-3.7 Procedure C.

6-3.7.1 Sample helmets shall be seated on the ISO size J headform specified in Figure 6-19.4.1 and shall be positioned according to the helmet's positioning index. The helmet shall be positioned under the radiant heat source specified in 6-1.6.4, with the basic plane of the headform parallel to the radiant heat source as shown in Figure 6-3.7.1.

FIGURE 6-3.7.1 Test Procedure C.

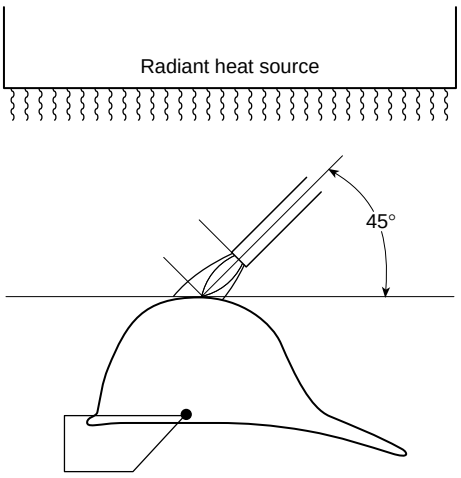

6-3.7.2 Sample helmets shall be positioned so that the area to be tested receives a radiant flux of 1.0 W/cm^2, ±0.1 W/cm^2. After 60 seconds, +5/−0 seconds exposure to the radiant flux and without removing the radiant heat source, the tip of the inner cone of a Bunsen burner flame 25 mm to 38 mm (1 in. to $1^1/_2$ in.) in length shall be placed against the helmet test area so that the flame creates an angle of 45 degrees, ±10 degrees with the plane tangent to the test area at the point of contact.

6-3.7.3 After 15 seconds, +1/−0 seconds the flame shall be removed and the duration of afterflame and afterglow shall be measured.

6-3.8 Report.

6-3.8.1 Afterflame and afterglow times shall be reported for each specimen at each flame impingement location.

6-3.8.2 The afterflame and afterglow times shall be reported to the nearest 0.2 second.

6-3.9 Interpretation. Pass/fail performance shall be based on the longest measured afterflame and afterglow times.

6-4 Flame Resistance, Test Three.

6-4.1 Application. This test method shall apply to proximity protective gloves.

6-4.2 Specimens.

6-4.2.1 Each specimen to be tested shall be a rectangle at least 50 mm × 150 mm (2 in. × 6 in.). Specimens shall be the composites used in actual glove construction consisting of each single layer, with all layers arranged in proper order. In each test, the specimen's normal outer surface shall be exposed to the flame.

6-4.2.2 Three specimens shall be tested for each material.

6-4.2.3 If a proposed glove construction has stitched-through seams, three additional specimens containing these seams shall be tested. The seams shall be in the direction of the 150-mm (6-in.) dimension.

6-4.3 Sample Preparation.

6-4.3.1 Specimens shall be tested both before and after being subjected to the procedure specified in 6-1.2.

6-4.3.2 All specimens to be tested shall be conditioned as specified in 6-1.3.

6-4.3.3 Samples to be conditioned shall be the composites used in actual glove construction consisting of each single layer, with all layers arranged in proper order and stitched along the edges using the same thread as used in the construction of the glove.

6-4.4 Apparatus.

6-4.4.1 The test apparatus specified in Method 5905.1, "Flame Resistance of Material; High Heat Flux Flame Contact," of Federal Test Method Standard 191A, *Textile Test Methods*, shall be used.

6-4.4.2 A freestanding flame height indicator shall be used to assist in adjusting the burner flame height. The indicator shall mark a flame height of 76 mm (3 in.) above the top of the burner.

6-4.4.3 A specimen support assembly shall be used that consists of a frame and steel rod of 2 mm ($^1/_{16}$ in.) in diameter to support the specimen in an L-shaped position, as shown in Figure 6-4.4.3.

Copyright National Fire Protection Association
Provided by IHS under license with NFPA
No reproduction or networking permitted without license from IHS
Not for Resale

FIGURE 6-4.4.3 Relationship of test material to burner.

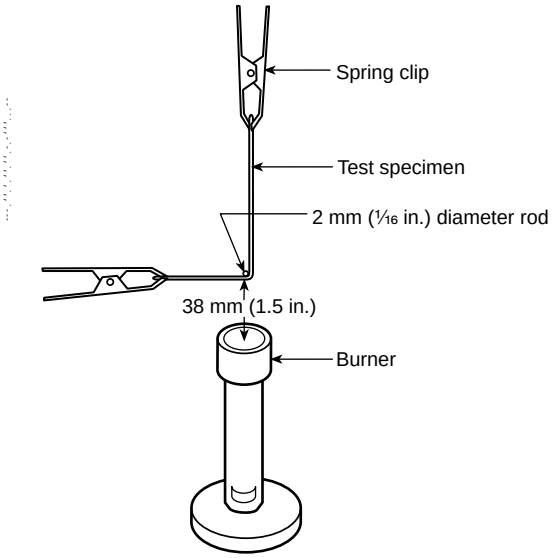

6-4.4.4 The horizontal portion of the specimen shall be not less than 50 mm (2 in.), and the vertical portion shall be not less than 100 mm (4 in.). The specimen shall be held at each end by spring clips under light tension, as shown in Figure 6-4.4.3.

6-4.5 Procedure.

6-4.5.1 A balance shall be used to determine the weight of each specimen to the nearest 0.1 g (0.04 oz) before and after testing.

6-4.5.2 The burner shall be ignited and the test flame shall be adjusted to a height of 75 mm (3 in.) with the gas on/off valve fully open and the air supply completely and permanently off, because it is important that the flame height be closely controlled. The 75-mm (3-in.) height shall be obtained by adjusting the orifice in the bottom of the burner so that the top of the flame is level with the marked flame height indicator.

6-4.5.3 With the specimen mounted in the support assembly, the burner shall be moved so that the middle of the folded corner projects into the flame 38 mm ($1^1/_2$ in.), as shown in Figure 6-4.4.3.

6-4.5.4 The burner flame shall be applied to the specimen for 12 seconds. After 12 seconds, the burner shall be removed.

6-4.5.5 The afterflame time shall be measured as the time, in seconds, to the nearest 0.2 second, that the specimen continues to flame after the burner is removed from the flame.

6-4.5.6 Each layer of the specimen shall be examined for melting or dripping.

6-4.5.7 Each tested sample shall be reconditioned as specified in 6-1.3 and then weighed to the nearest 0.1 g (0.04 oz).

6-4.5.8 The specimen then shall be further examined for char length. The char length shall be determined by measuring the length of the tear through the center of the charred area as specified in 6-4.5.8.1 through 6-4.5.8.4.

6-4.5.8.1 The specimen shall be folded lengthwise and creased, by hand, along a line through the highest peak of the charred area.

6-4.5.8.2 The hook shall be inserted into a hole punched in the specimen that is 6 mm ($^1/_4$ in.) in diameter or less. The hole shall be punched out for the hook at one side of the charred area that is 6 mm ($^1/_4$ in.) from the adjacent outside edge, at the point where the specimen contacted the steel rod, and 6 mm ($^1/_4$ in.) in from the lower end.

6-4.5.8.3 A weight of sufficient size so that the weight and hook together equal the total tearing weight required by Table 6-4.5.8.3 shall be attached to the hook. The total tearing weight for determining char length shall be based on the weight of the composite specimen and shall be determined from Table 6-4.5.8.3.

Table 6-4.5.8.3 Determining Tearing Weight

Specified Weight per Square Yard of Material Before Any Fire-Retardant Treatment or Coating		Total Tearing Weight for Determining Charred Length	
g/m^2	oz/yd^2	kg	lb
69–203	2.0–6.0	0.1	$^1/_4$
over 203–508	over 6.0–15.0	0.2	$^1/_2$
over 508–780	over 15.0–23.0	0.3	$^3/_4$
over 780	over 23.0	0.45	1

6-4.5.8.4 A tearing force shall be applied gently to the specimen by grasping the side of the material at the edge of the char opposite the load and raising the specimen and weight clear of the supporting surface. The end of the tear shall be marked off on the edge and the char length measurement made along the undamaged edge.

6-4.6 Report.

6-4.6.1 The afterflame time and char length shall be reported for each specimen. The average afterflame time and char length shall also be calculated and reported. The afterflame time shall be reported to the nearest 0.2 second and the char length to the nearest 2.5 mm ($^3/_{32}$ in.).

6-4.6.2 The percent of specimen consumed shall be calculated using the following formula:

$$\text{Percent consumed} = \frac{W - R}{W} \times 100$$

where:

W = original preconditioned weight
R = conditioned weight 24 hours after testing

The percent consumed shall be reported for each specimen to the nearest 0.1 percent. The average percent consumed shall be calculated and reported to the nearest 0.1 percent.

6-4.6.3 Observations of melting or dripping for each specimen shall be reported.

6-4.7 Interpretation. Pass/fail performance shall be based on melting or dripping, the average afterflame time, and the average char length.

6-5 Flame Resistance, Test Four.

6-5.1 Application. This test method shall apply to proximity protective footwear.

Copyright National Fire Protection Association
Provided by IHS under license with NFPA
No reproduction or networking permitted without license from IHS
Not for Resale

6-5.2 Specimens. Three complete footwear items shall be tested.

6-5.3 Sample Preparation.

6-5.3.1 Samples for conditioning shall be whole boots.

6-5.3.2 Specimens shall be conditioned as specified in 6-1.3.

6-5.4 Apparatus.

6-5.4.1 The test apparatus specified in Method 5905.1, "Flame Resistance of Material; High Heat Flux Flame Contact," of Federal Test Method Standard 191A, *Textile Test Methods,* shall be used.

6-5.4.2 A freestanding flame height indicator shall be used to assist in adjusting the burner flame height. The indicator shall mark a flame height of 75 mm (3 in.) above the top of the burner.

6-5.4.3 A specimen support assembly shall be used to support the footwear specimen above the burner flame.

6-5.5 Procedure.

6-5.5.1 The burner shall be ignited and the test flame shall be adjusted to a height of 75 mm (3 in.) with the gas on/off valve fully open and the air supply completely and permanently off, as it is important that the flame height be closely controlled. The 75-mm (3-in.) height shall be obtained by adjusting the orifice in the bottom of the burner so that the top of the flame is level with the marked flame height indicator.

6-5.5.2 With the specimen mounted in the support assembly, the burner shall be moved so that the flame contacts the specimen at a distance of 38 mm ($1^1/_2$ in.) at the angles in the areas shown in Figure 6-5.5.2.

FIGURE 6-5.5.2 Test areas.

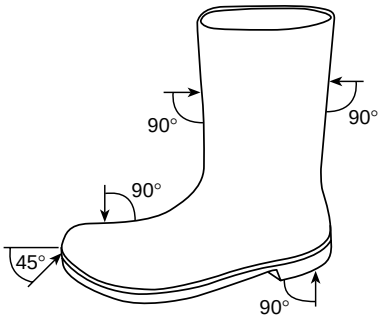

6-5.5.3 The burner flame shall be applied to the specimen for 12 seconds. After 12 seconds, the burner shall be removed.

6-5.5.4 The afterflame time shall be measured as the time, in seconds, to the nearest 0.2 second, that the specimen continues to flame after the burner is removed from the flame.

6-5.5.5 Following the flame exposure, the specimen shall be removed and examined for burn-through. Each layer of the specimen shall be examined for melting or dripping.

6-5.6 Report.

6-5.6.1 The afterflame time shall be reported for each specimen. The average afterflame time shall be calculated and reported. The afterflame time shall be reported to the nearest 0.2 second.

6-5.6.2 Observations of burn-through, melting, or dripping for each specimen shall be reported.

6-5.7 Interpretation. Pass/fail performance shall be based on any observed burn-through, melting or dripping, and the average afterflame time.

6-6 Heat and Thermal Shrinkage Resistance Test.

6-6.1 Application.

6-6.1.1 This test method shall apply to proximity protective garment textiles, hardware, moisture barrier seams, wristlet, helmet shroud materials, helmet outer cover materials, innermost glove liner materials, and label materials; proximity protective helmets, proximity protective gloves, and proximity protective footwear.

6-6.1.2 Modifications to this test method for testing garment outer shell, moisture barrier, thermal barrier, winter liner, helmet shrouds, and innermost glove liner materials shall be as specified in 6-6.8.

6-6.1.3 Modifications to this test method for testing garment moisture barrier seams shall be as specified in 6-6.9.

6-6.1.4 Modifications to this test method for testing other materials including, but not limited to, padding, reinforcements, labels, interfacing, binding, hanger loops, and emblems or patches shall be as specified in 6-6.10.

6-6.1.5 Modifications to this test method for testing hardware shall be as specified in 6-6.11.

6-6.1.6 Modifications to this test method for testing helmets shall be as specified in 6-6.12.

6-6.1.7 Modifications to this test method for testing gloves shall be as specified in 6-6.13.

6-6.1.8 Modifications to this test method for testing footwear shall be as specified in 6-6.14.

6-6.2 Specimens.

6-6.2.1 Only heat resistance testing shall be conducted on a minimum of three specimens for each moisture barrier seam, hardware item, glove liner material, label material, other proximity protective garment materials, helmets, and footwear not specified in 6-6.2.2.

6-6.2.2 Both heat and thermal shrinkage resistance testing shall be conducted on a minimum of three specimens for each garment outer shell, moisture barrier, thermal liner, and winter liner and on whole gloves and footwear. Each separable layer of multilayer material systems or composites shall be tested as an individual layer.

6-6.3 Sample Preparation. All specimens to be tested shall be conditioned as specified in 6-1.3.

6-6.4 Apparatus.

6-6.4.1 The test oven shall be a horizontal flow circulating oven with minimum interior dimensions so that specimens can be suspended and are at least 51 mm (2 in.) from any interior oven surface or other test specimens.

6-6.4.2 The test oven shall have an airflow rate of 38 m/min to 76 m/min (125 ft/min to 250 ft/min) at the standard temperature and pressure of 21°C (70°F) at 1 atm, measured, at the center point of the oven.

6-6.4.3 A test thermocouple shall be positioned so that it is level with the horizontal centerline of a mounted sample specimen. The thermocouple shall be equidistant between the vertical

Copyright National Fire Protection Association
Provided by IHS under license with NFPA
No reproduction or networking permitted without license from IHS
Not for Resale

centerline of a mounted specimen placed in the middle of the oven and the oven wall where the airflow enters the test chamber. The thermocouple shall be an exposed bead, Type J or Type K, No. 30 AWG thermocouple. The test oven shall be heated and the test thermocouple stabilized at 260°C, +6°/−0°C (500°F, +10°/−0°F) for a period of not less than 30 minutes.

6-6.5 Procedure.

6-6.5.1 Specimen marking and measurements shall be conducted in accordance with the procedure specified in AATCC 135, *Dimensional Changes in Automatic Home Laundering of Woven and Knit Fabrics.*

6-6.5.2 The specimen shall be suspended by metal hooks at the top and centered in the oven so that the entire specimen is not less than 50 mm (2 in.) from any oven surface or other specimen and air is parallel to the plane of the material.

6-6.5.3 The oven door shall not remain open more than 15 seconds. The air circulation shall be shut off while the door is open and turned on when the door is closed. The total oven recovery time after the door is closed shall not exceed 30 seconds.

6-6.5.4 The specimen, mounted as specified, shall be exposed in the test oven for 5 minutes, +15/−0 seconds. The test exposure time shall begin when the test thermocouple recovers to a temperature of 260°C, +6°/−0°C, (500°F, +10°/−0°F).

6-6.5.5 Immediately after the specified exposure, the specimen shall be removed and examined for evidence of ignition, melting, dripping, or separation.

6-6.5.6 After the specified exposure, the specimen also shall be measured to determine pass/fail. Knit fabric shall be pulled to its original dimensions and shall be allowed to relax for 1 minute prior to measurement to determine pass/fail.

6-6.6 Report.

6-6.6.1 Observations of ignition, melting, dripping, or separation shall be reported for each specimen.

6-6.6.2 The percentage change in the width and length dimensions of each specimen shall be calculated. Results shall be reported as the average of all three specimens in each dimension.

6-6.7 Interpretation.

6-6.7.1 Any evidence of ignition, melting, dripping, or separation on any specimen shall constitute failing performance.

6-6.7.2 The average percent change in both dimensions shall be used to determine pass/fail performance. Failure in any one dimension constitutes failure for the entire sample.

6-6.8 Specific Requirements for Testing Garment Outer Shell, Moisture Barrier, Thermal Liner, Winter Liner Materials; Helmet Outer Cover, Helmet Shroud, and Glove Liner Materials.

6-6.8.1 Samples for conditioning shall be at least 1 m (1 yd) square of each material.

6-6.8.2 Each specimen shall be 380 mm × 380 mm, ±13 mm (15 in. × 15 in., $\pm^1/_2$ in.) and shall be cut from the fabric to be used in the construction of the clothing item.

6-6.8.3 Specimens shall be tested both before and after being subjected to the procedure specified in 6-1.2.

6-6.8.4 Testing shall be performed as specified in 6-6.2 through 6-6.7.

6-6.8.5 For proximity protective garment outer shell, collar lining, helmet shrouds, and outer covers, any evidence of charring on any specimen of outer shell fabric shall also constitute failing performance in addition to 6-6.7.1.

6-6.9 Specific Requirements for Testing Moisture Barrier Seams.

6-6.9.1 Samples for conditioning shall be a minimum of 1 linear m (1 linear yd) with a minimum of 150 mm (6 in.) of material on each side of the seam.

6-6.9.2 Moisture barrier seam specimens shall consist of two 75-mm × 150-mm (3-in. × 6-in.) pieces of moisture barrier fabric used in the garment and sewn together with the same thread, stitch type, and seam type as used in the moisture barrier, with seam-sealing material applied.

6-6.9.3 Specimens shall be tested with the sealed seam oriented vertically, and shall be tested both before and after being subjected to the procedure specified in 6-1.2.

6-6.9.4 For moisture barrier seam seal materials, observations shall be limited to seam material ignition and dripping.

6-6.9.5 Testing shall be performed as specified in 6-6.2 through 6-6.7. Thermal shrinkage shall not be measured.

6-6.10 Specific Requirements for Testing Other Materials.

6-6.10.1 Samples for conditioning shall include material sewn onto a 1-m (1-yd) square of ballast material no closer than 50 mm (2 in.) apart in parallel strips. The ballast material shall be as specified in AATCC 135, *Dimensional Changes in Automatic Home Laundering of Woven and Knit Fabrics.* Specimens shall be removed from the ballast material prior to testing.

6-6.10.2 Specimen length shall be 150 mm (6 in.). Where textiles used in the clothing item are in lengths less than 150 mm (6 in.), the specimen length shall be the same as used in the clothing item.

6-6.10.3 Specimen width shall be 150 mm (6 in.). Where textiles used in the clothing item are in widths less than 150 mm (6 in.), the specimen width shall be the same as used in the clothing item.

6-6.10.4 Specimens shall be tested both before and after being subjected to the procedure specified in 6-1.2.

6-6.10.5 Testing shall be performed as specified in 6-6.2 through 6-6.7. Thermal shrinkage shall not be measured.

6-6.11 Specific Requirements for Testing Hardware.

6-6.11.1 A minimum of three complete hardware items shall be tested.

6-6.11.2 Observations of hardware condition following heat exposure shall be limited to ignition.

6-6.11.3 Hardware shall be evaluated for functionality within 10 minutes following removal from the oven.

6-6.11.4 Testing shall be performed as specified in 6-6.2 through 6-6.7. Thermal shrinkage shall not be measured.

6-6.12 Specific Testing Requirements for Helmets.

6-6.12.1 Samples for conditioning shall include complete helmets.

6-6.12.2 Specimens shall be selected as specified in 2-3.4.2.

Copyright National Fire Protection Association
Provided by IHS under license with NFPA
No reproduction or networking permitted without license from IHS
Not for Resale

FIGURE 6-6.12.3 Nonconductive test headform.

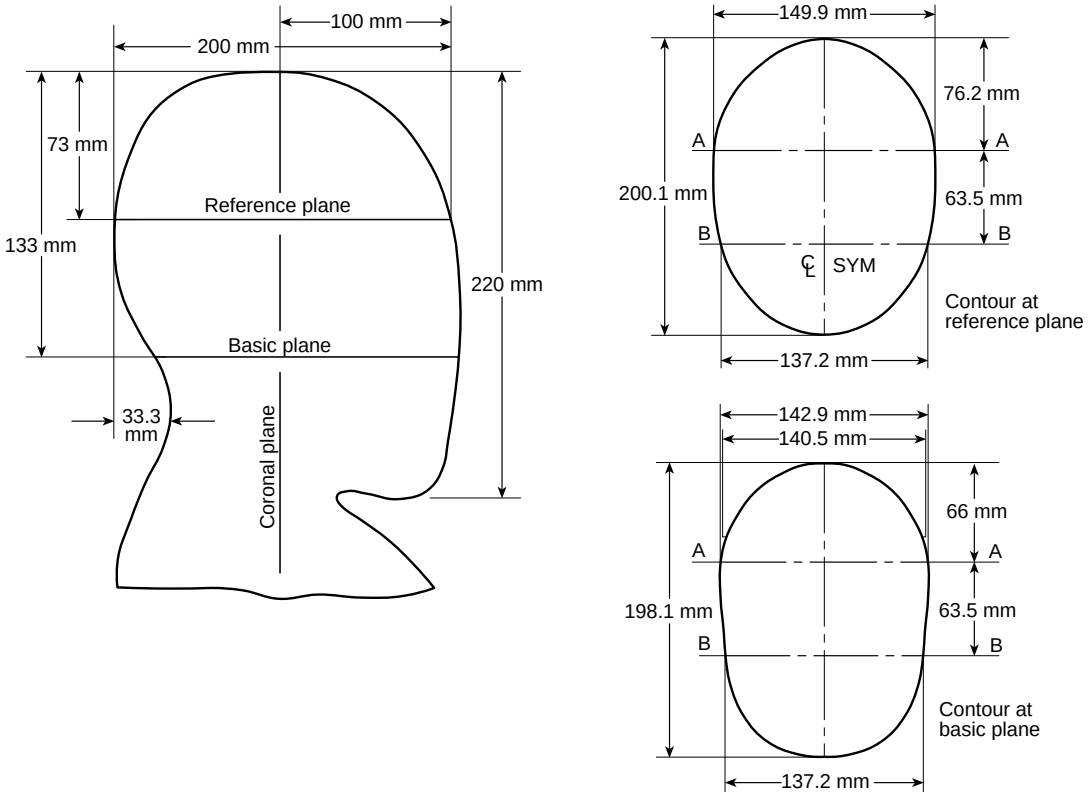

6-6.12.3 Sample helmets with shrouds, and a faceshield component(s) in the stowed position, shall be seated on the nonconductive headform specified in Figure 6-6.12.3 and shall be positioned according to the helmet's positioning index. The headform with helmet attached shall be placed in the center of the test oven with the centerline of the front of the helmet facing the airflow.

6-6.12.4 The minimum interior dimensions of the test oven shall be 610 mm × 610 mm × 610 mm (24 in. × 24 in. × 24 in.).

6-6.12.5 The test thermocouple shall be positioned so that it is level with the horizontal centerline of a mounted test helmet. The thermocouple shall be equidistant between the vertical centerline of a mounted test helmet placed in the middle of the oven and the oven wall where the airflow enters the test chamber.

6-6.12.6 Following removal from the oven, the helmet shall be allowed to cool at room temperature for not less than 2 minutes. The shell distortion shall then be measured at the front, back, and sides at eight points radially separated by 45 degrees relative to their original position. The helmet shall be examined to ascertain any effects of the heat exposure.

6-6.12.7 Testing shall be performed as specified in 6-6.2 through 6-6.7. Thermal shrinkage shall not be measured.

6-6.13 Specific Requirements for Testing Gloves.

6-6.13.1 Samples for conditioning shall be whole gloves.

6-6.13.2 Conditioning shall be performed as specified in 6-1.2.

6-6.13.3 Specimens shall include complete gloves with labels.

6-6.13.4 The minimum interior dimensions of the test oven shall be 610 mm × 610 mm × 610 mm (24 in. × 24 in. × 24 in.).

6-6.13.5 The glove body shall be filled with dry vermiculite, taking care to tightly pack the vermiculite into the fingers of the glove and glove body. The opening of the glove shall be clamped together, and the specimen shall be suspended by the clamp in the oven so that the entire glove is not less than 50 mm (2 in.) from any oven surface or other specimen and airflow is parallel to the plane of the material. Not more than six glove specimens and not less than three glove specimens shall be placed in the test oven at one time.

6-6.13.6 The glove specimen dimensions shall be measured to determine pass/fail. The length measurement of the glove specimen shall be from the tip of the middle finger to the end of the glove body on the palm side. The width measurement of the glove specimen shall be the width measurement on the palm side 25 mm (1 in.) below the base of the fingers.

6-6.13.7 The percent change in the width and length dimensions of each specimen shall be calculated. Results shall be reported as the average of all three specimens in each dimension.

6-6.13.8 Specimens shall be donned and flexed as specified in 6-1.10 before and after the heat exposure.

6-6.13.9 Testing shall be performed as specified in 6-6.2 through 6-6.7.

6-6.14 Specific Testing Requirements for Footwear.

6-6.14.1 Samples for conditioning shall be whole boots.

6-6.14.2 The footwear specimen for testing shall be size 9.

Copyright National Fire Protection Association
Provided by IHS under license with NFPA
No reproduction or networking permitted without license from IHS
Not for Resale

6-6.14.3 Footwear specimens shall include sole, heel, and upper. Footwear specimens shall be filled with dry vermiculite. Any closures shall be fastened.

6-6.14.4 The boot specimen dimensions shall be measured to determine pass/fail. The boot height measurement shall be taken from the base of the heel to the top line. The boot circumference shall be measured at the midpoint between the heel and the top line. The outsole length shall be measured from the back of the heal to the tip of the toe along the boot sole centerline. The sole width at the ball shall be measured at 90 degrees from the centerline of the sole. The percentage change in the dimensions of each specimen shall be calculated. Results shall be reported as the average of all three specimens in each dimension.

6-6.14.5 The test thermocouple shall be positioned so that it is level with the horizontal centerline of a footwear test specimen. The thermocouple shall be equidistant between the vertical centerline of a footwear test specimen placed in the middle of the oven and the oven wall where the airflow enters the test chamber.

6-6.14.6 The minimum interior dimensions of the test oven shall be 610 mm × 610 mm × 610 mm (24 in. × 24 in. × 24 in.).

6-6.14.7 The protective footwear test specimen shall be placed in the center of the test oven with the centerline of the front of the specimen facing the airflow.

6-6.14.8 Following removal from the oven, the specimen shall be allowed to cool at room temperature for not less than 5 minutes, +15/–0 seconds.

6-6.14.9 Testing shall be performed as specified in 6-6.2 through 6-6.7.

6-6.14.10 Each tested specimen shall be reconditioned as specified in 6-1.3 and then re-examined inside and outside for separation and functionality.

6-7 Conductive Heat Resistance, Test One.

6-7.1 Application.

6-7.1.1 This test method shall apply to gloves and footwear upper material.

6-7.1.2 Modifications for this test method for testing gloves shall be as specified in 6-7.7.

6-7.1.3 Modifications for this test method for testing footwear shall be as specified in 6-7.8.

6-7.2 Samples.

6-7.2.1 Samples for conditioning shall be whole gloves and boots.

6-7.2.2 There shall be at least three samples each of gloves and footwear.

6-7.3 Specimen Preparation.

6-7.3.1 A total of three specimens of gloves and three specimens of footwear shall be tested.

6-7.3.2 Specimens shall be conditioned as specified in 6-1.3.

6-7.4 Procedure. Specimens shall be tested in accordance with ASTM F 1060, *Standard Test Method for Thermal Protective Performance of Materials for Protective Clothing for Hot Surface Contact*, with the following modifications.

(a) Specimens shall be tested using an exposure temperature of 280°C (536°F). The pressure applied during the test shall be 3.45 kPa, ±0.35 kPa (0.5 psi, ±0.05 psi).

(b) The time in seconds to pain and to second-degree burn and blister, as predicted by the Stoll Human Tissue Burn Tolerance Criteria, shall be recorded.

(c) The time to thermal end point shall be determined graphically from the recorder chart of the sensor response and the criterion overlay prepared in 10.5 of ASTM F 1060, *Standard Test Method for Thermal Protective Performance of Materials for Protective Clothing for Hot Surface Contact*. The overlay shall be positioned on the recorder chart, matching the zero of the overlay with the point on the recorder chart corresponding to the time at which the sensor and specimen were placed in direct contact with the hot plate. The horizontal (time) axis shall be placed in line with the initial trace of the pen. The overlay shall be kept square with the recorder chart. Exposure time shall be read to the nearest 0.1 second from the overlay chart at the point where the sensor response and the tissue tolerance curve cross.

6-7.5 Report.

6-7.5.1 For glove specimens, the time to pain and time to second-degree burn for each specimen shall be reported. The average time to pain and time to second-degree burn shall be calculated and reported. If the time to pain or time to second-degree burn is greater than 30 seconds, the time to pain or time to second-degree burn shall be reported as ">30 seconds."

6-7.5.2 For footwear specimens, the time to pain and time to second-degree burn for each specimen shall be reported. The average time to pain and time to second-degree burn shall be calculated and reported. If the time to pain is greater than 10 minutes, the time to pain or time to second-degree burn shall be reported as ">10 minutes." If the time to second-degree burn is greater than 12 minutes, the time to pain or time to second-degree burn shall be reported as ">12 minutes."

6-7.6 Interpretation.

6-7.6.1 Pass/fail determinations shall be based on the average time to pain and time to second-degree burn of all specimens tested.

6-7.6.2 If an individual result from any test set varies more than ±8 percent from the average result, the results from the test set shall be discarded and another set of specimens shall be tested.

6-7.7 Specific Requirement for Testing Gloves.

6-7.7.1 Specimens shall be representative of glove body composite construction at the palm of the hand and at the palm side of the fingers.

6-7.7.2 Specimens shall be stitched around the perimeter using the same thread used in glove construction.

6-7.7.3 Specimens shall be tested after being subjected to the procedure specified in 6-1.3 both before and after laundering as specified in 6-1.2.

6-7.7.4 Specimens shall also be tested after being subjected to wet conditioning as specified in 6-1.8 both before and after laundering as specified in 6-1.2.

6-7.7.5 Testing shall be performed as specified in 6-7.2 through 6-7.6.

Copyright National Fire Protection Association
Provided by IHS under license with NFPA
No reproduction or networking permitted without license from IHS
Not for Resale

6-7.8 Specific Requirements for Testing Footwear Upper Materials.

6-7.8.1 Footwear specimens shall be cut from the thinnest portions of the footwear upper or from a composite that is representative of footwear upper construction at the thinnest part.

6-7.8.2 Specimens shall be tested using a modified exposure temperature in 6-7.4(a) of 100°C (212°F). The pressure applied during the test shall be 3.45 kPa, ±0.34 kPa (0.5 psi, ±0.05 psi).

6-7.8.3 The test exposure duration shall be 10 minutes and the reported time in 6-7.5.1 shall not show a time to pain or time of less than 10 minutes.

6-7.8.4 Testing shall be performed as specified in 6-7.2 through 6-7.6, as modified in 6-7.8.

6-8 Conductive Heat Resistance, Test Two.

6-8.1 Application. This test method shall apply to the protective footwear sole.

6-8.2 Specimens. A minimum of three complete footwear items shall be tested.

6-8.3 Sample Preparation.

6-8.3.1 Samples for conditioning shall be whole footwear.

6-8.3.2 Specimens shall be preconditioned as specified in 6-1.3.

6-8.4 Apparatus. The apparatus shall consist of an iron plate measuring 25 mm × 150 mm × 460 mm (1 in. × 6 in. × 18 in.) and an oven capable of heating the plate to a temperature of 500°C (932°F), a Type J or Type K thermocouple, and a meter to read the thermocouple temperature.

6-8.5 Procedure.

6-8.5.1 The thermocouple shall be affixed to the insole surface of the specimen next to the foot, directly above the ball of the foot. The thermocouple shall be taped to the surface with electrical tape to hold it onto the insole surface.

6-8.5.2 The plate shall be heated to a temperature of 500°C, ±10°C (932°F, ±18°F) and shall maintain this temperature throughout the test period.

6-8.5.3 The specimen shall be filled with 4.55 kg (10 lb) of 5-mm ($^3/_8$-in.) steel balls. The weight of the steel balls shall be evenly distributed inside the boot. The specimen shall be placed on the plate in the upright position for 30 seconds.

6-8.5.4 The thermocouple temperature shall be recorded at 30 seconds, +2/−0 seconds, after the specimen is placed on the heated metal plate.

6-8.6 Report.

6-8.6.1 The temperature at 30 seconds of exposure shall be reported for each specimen.

6-8.6.2 The average temperature at 30 seconds of exposure for all specimens shall also be calculated and reported.

6-8.7 Interpretation. The average temperature at 30 seconds of exposure for all specimens shall be used to determine pass/fail performance.

6-9 Radiant Heat Resistance, Test One.

6-9.1 Application. This test method shall apply to protective footwear.

6-9.2 Samples. Samples for conditioning shall be complete footwear.

6-9.3 Specimen Preparation.

6-9.3.1 A minimum of three complete footwear items shall be tested.

6-9.3.2 Specimens shall be conditioned in accordance with 6-1.3 and 6-1.9.

6-9.4 Apparatus. The apparatus shall consist of the following:

(1) A radiometer with a spectral response flat to within ±3 percent of not less than 1.10 to 10.0 μm with an accuracy of ±5 percent
(2) A radiant panel with an effective radiating surface of not less than 150 mm × 150 mm (6 in. × 6 in.) and an emittance approximating that of a blackbody of 1000°K, ±200°K (1340°F, ±360°F)
(3) A thermocouple with meter
(4) A test chamber that prevents interference from air movement

6-9.5 Procedure.

6-9.5.1 Tests shall be done on the toe, vamp, quarter, gusset if present, and shaft. If different types or thickness of materials are used for other areas of the upper, these areas shall also be tested.

6-9.5.2 The radiant panel shall be placed in front of the radiometer, parallel to the plane tangent to the radiometer. The radiant panel shall be adjusted to obtain a stable, uniform irradiance of 1.0 cal/cm^2, +0.01/−0.0 cal/cm^2 over a minimum 75-mm (3-in.) diameter circle located on the above plane and centered at the center of the test area. Calibration shall be achieved when the irradiance changes by less than 10 percent during a 3-minute period.

6-9.5.3 The thermocouple shall be affixed to the inside surface of the lining next to the foot, in the center of the test area. The radiometer shall be replaced with the protective footwear with the test area oriented parallel to the plane tangent to the heat source, at the same distance from the heat source. The area shall be exposed for 100 seconds, +5/−0 seconds.

6-9.5.4 The thermocouple temperature shall be recorded at 100 seconds of exposure.

6-9.6 Report.

6-9.6.1 The temperature at 100 seconds of exposure shall be reported for each specimen.

6-9.6.2 The average temperature at 100 seconds of exposure for all specimens shall also be calculated and reported.

6-9.7 Interpretation. The average temperature at 100 seconds of exposure for all specimens tested shall be used to determine pass/fail performance.

6-10 Radiant Reflective, Test Two.

6-10.1 Application.

6-10.1.1 This test method shall apply to garment outer shell materials, gloves, helmet faceshields, footwear, helmet outer covers, and helmet shrouds.

6-10.1.2 Modifications to this test method for testing garment outer shell and glove outer shell materials shall be as specified in 6-10.8.

Copyright National Fire Protection Association
Provided by IHS under license with NFPA
No reproduction or networking permitted without license from IHS
Not for Resale

6-10.1.3 Modifications to this test method for testing footwear shall be as specified in 6-10.9.

6-10.2 Samples. Samples for conditioning shall be garment and glove outer shell material, helmet faceshields, whole footwear, helmet outer covers, and helmet shrouds.

6-10.3 Specimen Preparation.

6-10.3.1 Five specimens of each sample shall be preconditioned in accordance with Section 4, Atmospheric Conditions for Testing, of Federal Test Method Standard 191A, *Textile Test Methods,* at a relative humidity of 65 percent, ±5 percent.

6-10.3.2 Test specimens shall be 75 mm × 250 mm (3 in. × 10 in.).

6-10.3.3 All specimens excluding helmet faceshields shall be conditioned by means of abrading the sample before removing it from the conditioned atmosphere. Specimens shall be tested for radiant heat not more than five minutes after removal from conditioning.

6-10.3.4 All specimens shall be conditioned on an oscillating drum abrasion apparatus as specified in Method 5304, Abrasion Resistance of Cloth; Oscillatory Method (Wyzenbeek) Method, of Federal Test Method Standard 191A, *Textile Test Methods.* The specimens shall be mounted on the oscillating drum of the apparatus. The abradant shall be No. 6 hard-textured cotton duck conforming to Type I of Federal Specification CCC-C-419, *Cloth, Duck, Unbleached, Plied-Ya77is, Army and Numbered,* and shall be cut into strips 45 mm ($1^7/_8$ in.) wide by 230 mm (9 in.) long with the long dimension in the warp or wale direction. The abradant shall be mounted in the specimen holding clamps under a tension of 13.5 N (3 lbf) and a head load of 1.36 kg (3 lb). A new abradant shall be used for each test, and the contact area of the abradant shall be free of slubs, knots, or other weave imperfections. The test specimens shall be subjected to 300 abrasion cycles.

6-10.4 Apparatus.

6-10.4.1 Apparatus shall consist of a vertically oriented radiant heat source, specimen holder assembly, protective shutter, sensor assembly, and recorder. The sensor block shall consist of a 133 mm × 133 mm × 13 mm ($5^1/_4$ in. × $5^1/_4$ in. × $^1/_2$ in.) heat-resistant material that fits without binding into the bracket or rear plate. The sensor shall be in accordance with paragraph 6.5, the recorder shall be in accordance with paragraph 6.6, and the chart overlay shall be in accordance with all paragraphs of ASTM D 4108, *Standard Method for Thermal Protective Performance of Materials for Clothing, Open-Flame Method.*

6-10.4.2 The radiant apparatus, as shown in Figures 6-10.4.2(a) through (f) (starting on page 34), shall consist of a bank of five 500-W, infrared, tubular, translucent quartz lamps having a 125-mm (5-in.) lighted length and a mean overall length of 224 mm ($8^{13}/_{16}$ in.). The lamps shall be mounted so that the lamps' surfaces are approximately 1 mm ($^1/_{32}$ in.) apart. The bank or array shall be mounted and centered behind a 57-mm × 140-mm ($2^1/_4$-in. × $5^1/_2$-in.) cutout on 13-mm ($^1/_2$-in.) transite board. A specimen holder and holder plate with a 63-mm × 125-mm ($2^1/_2$-in. × 5-in.) center cutout shall be positioned so that the distance from the nearest lamp surface to the test specimen is exactly 25 mm (1 in.). The holder plate shall include a bracket to hold the copper calorimeter sensor assembly that will cover the complete cutout section. The quartz lamp shall be heated electrically and the power input controlled by means of a varlac having a capacity of at least 25 A.

6-10.4.3 A protective shutter shall be placed between the radiant source and the specimen. The protective shutter shall be capable of completely reflecting radiant load for the time period before specimen exposure.

6-10.4.4 The sensor shall be a copper calorimeter mounted in an insulating block. The calorimeter shall conform to the specifications provided in Figure 6-10.4.4. The sensor shall be coated with a flat black paint.

FIGURE 6-10.4.4 Sensor assembly.

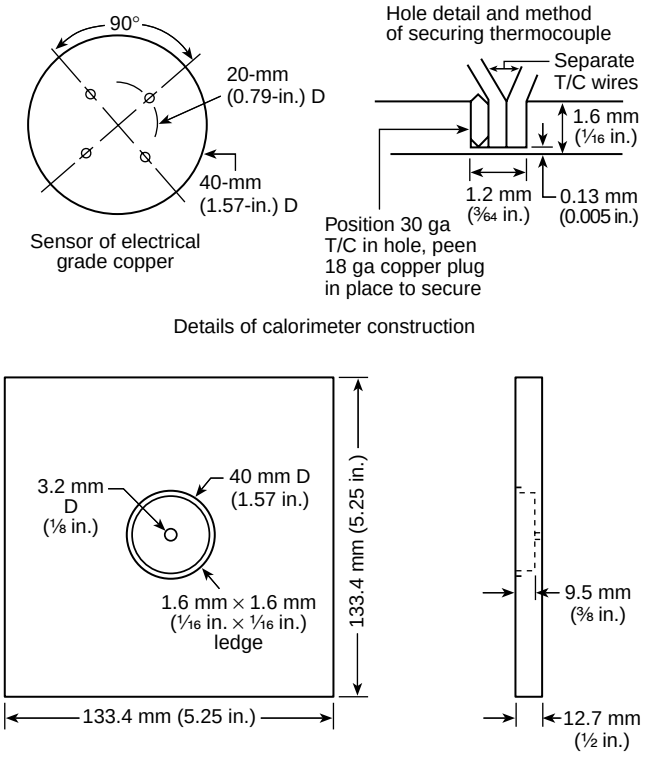

Connect 4 T/C in parallel, silver solder connections. Bring common lead out of center hole of support. Secure sensor into support with three or four sewing pins cut to 9.5 mm (3/8 in.) long.

6-10.4.5 Specimens shall be exposed to a thermal flux of 2.0 cal/cm^2, ±0.1 cal/cm^2 as measured with copper calorimeter. The copper calorimeter shall be the only heat sensor used in setting the 2.0 cal·cm^2/sec exposure condition. The total heat flux shall be calculated directly from the temperature response of the copper calorimeter constants. Other heat-sensing devices shall not be used to reference or adjust the heat flux read by the copper calorimeter. The response of the calorimeter shall be recorded for at least 10 seconds. The lowest temperature point on the curve where the response is linear shall be chosen, and the increase in sensor temperature for 10 seconds of heating shall also be determined. The initial reading shall be subtracted from the 10-second reading to obtain the increase. The response shall be 148°C, ± 4°C (267°F, ± 7°F), equivalent to 7.86 mV, ± 0.20 mV for an iron-constantan thermocouple for an exposure heat flux of 83 kW/m^2, ± 2 kW/m^2 (2.0 cal·cm^2/sec, ± 0.05 cal·cm^2/sec).

Copyright National Fire Protection Association
Provided by IHS under license with NFPA
No reproduction or networking permitted without license from IHS
Not for Resale

FIGURE 6-10.4.2(a) Radiant test apparatus.

1	Cast aluminum apparatus body
2	Toggle switch-DPST
3	Transite-smooth surfaces
4	5 quartz lamps-500T3 115-125V
5	Screw-10-24 3/4 in.
6	Legs for horizontal test position
7	Tapped 10-24
8	1/2-in. D imbedded magnet center screw fastening
9	Holder– 20-gauge cold rolled steel
10	Bolt– 3/16-in. D 1/2-in. brazed flush
11	Test sample
12	Holder plate – 20-gauge cold rolled steel
13	Drilled holes – 3/8-in. D

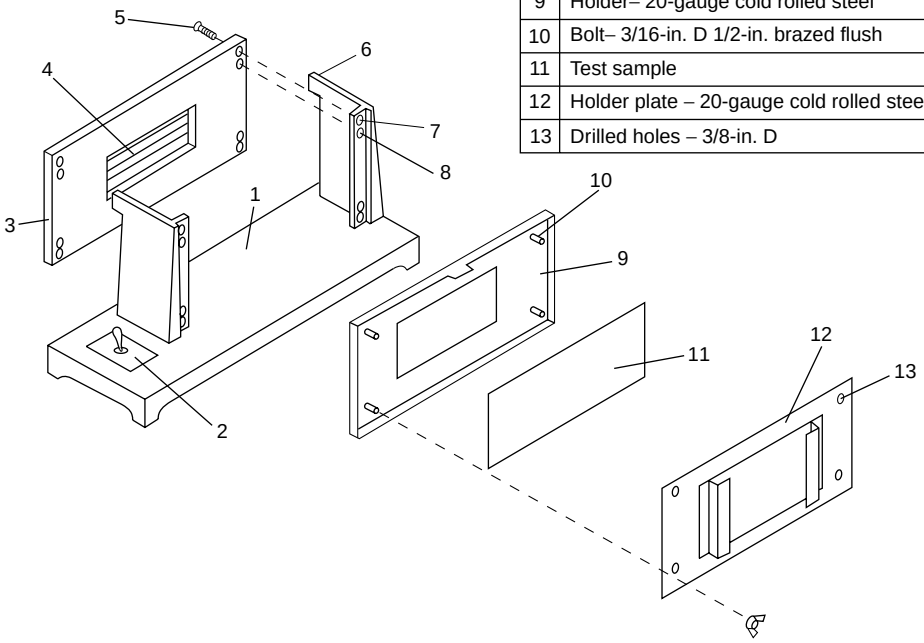

FIGURE 6-10.4.2(b) Radiant test apparatus.

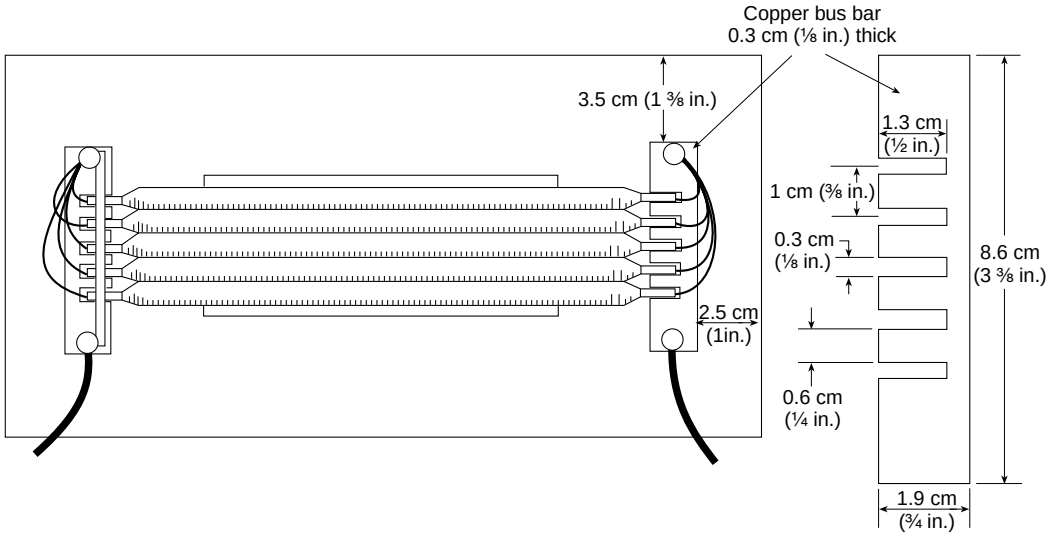

Copyright National Fire Protection Association
Provided by IHS under license with NFPA
No reproduction or networking permitted without license from IHS
Not for Resale

FIGURE 6-10.4.2(c) Radiant test apparatus.

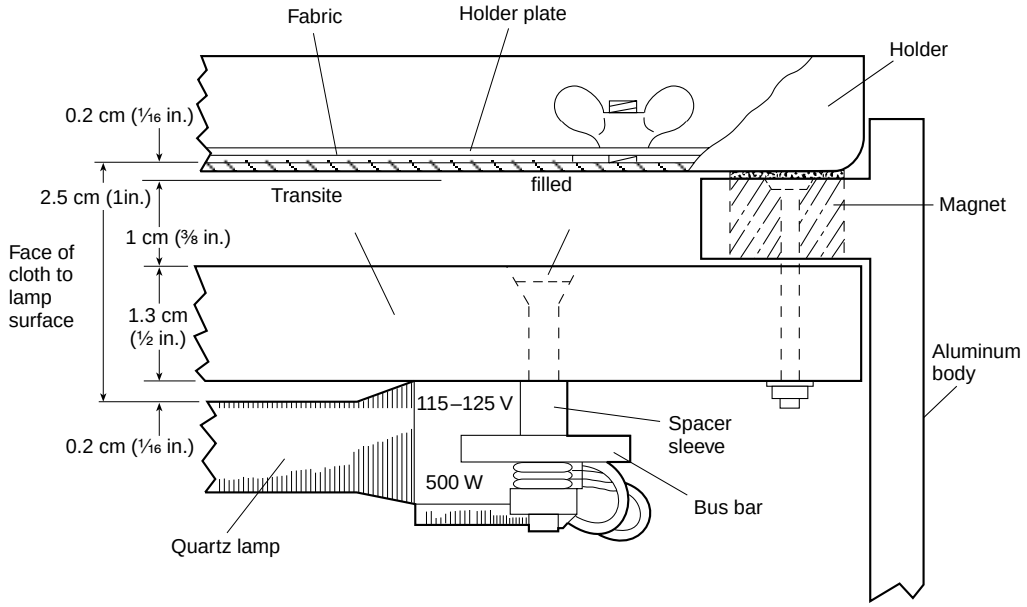

FIGURE 6-10.4.2(d) Radiant test apparatus.

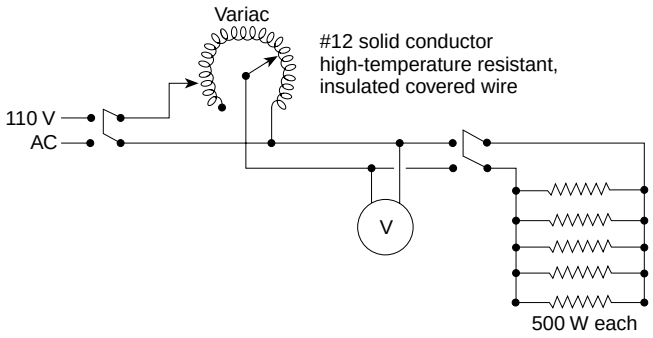

FIGURE 6-10.4.2(e) Radiant test apparatus.

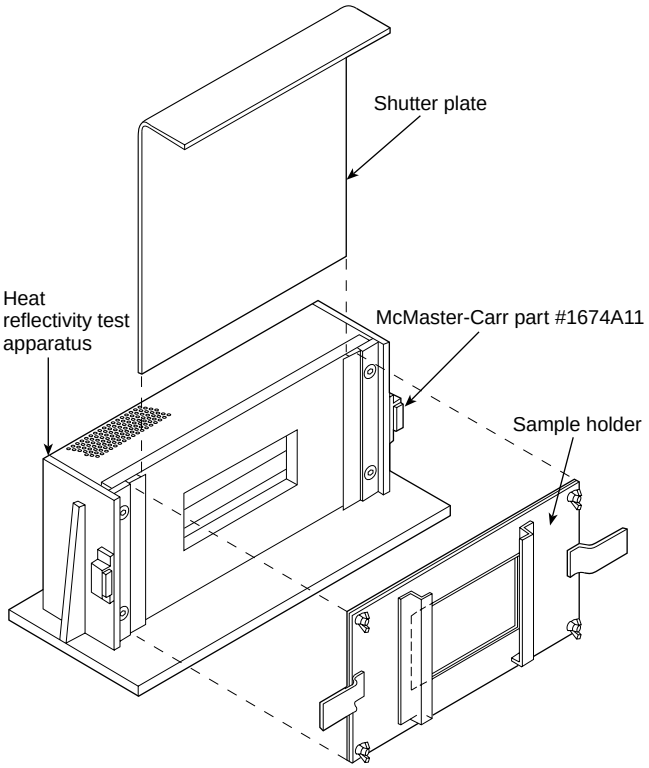

--`,,`-`-`,,`,,`,`,,`---
Copyright National Fire Protection Association
Provided by IHS under license with NFPA
No reproduction or networking permitted without license from IHS
Not for Resale

FIGURE 6-10.4.2(f) Radiant test apparatus.

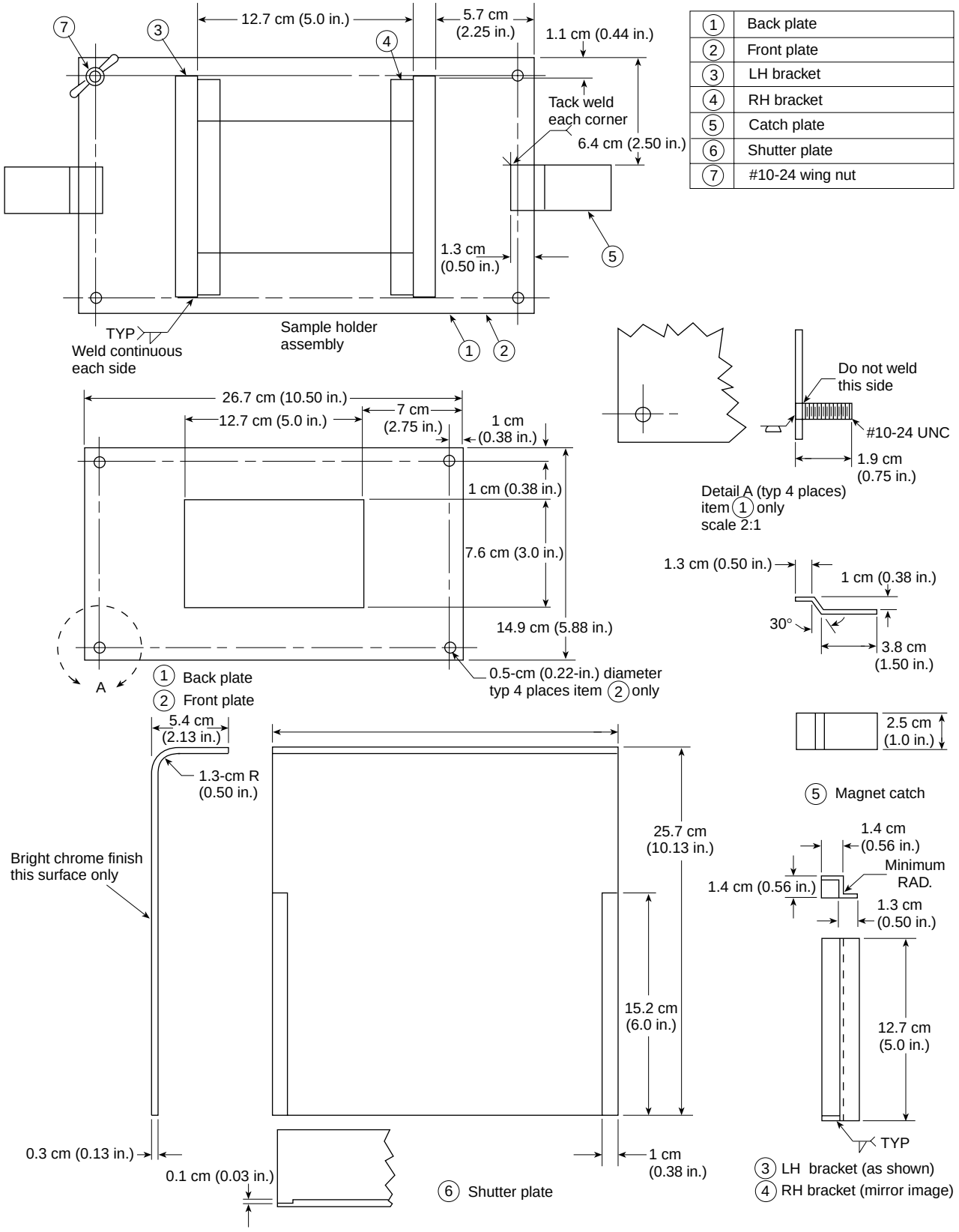

Copyright National Fire Protection Association
Provided by IHS under license with NFPA
No reproduction or networking permitted without license from IHS
Not for Resale

6-10.5 Procedure.

6-10.5.1 The sensor face shall be wiped immediately after each run, while hot, to remove any decomposition products that condense and could be a source of error. If a deposit collects and appears to be thicker than a thin layer of paint, or is irregular, the sensor surface shall be reconditioned. The cooled sensor shall be carefully cleaned with cleaning solution, making certain there is no ignition source nearby. If bare copper is showing, the surface shall be repainted with a thin layer of flat black spray paint. At least one calibration run shall be conducted before using the repainted sensor in a test run. The sensor shall be recalibrated after every sample run of five specimens. The sensor shall always approximate body temperature by contact with the hand prior to placing on the apparatus.

6-10.5.2 Specimens shall be exposed to a thermal flux of 2.0 cal/cm^2, ± 0.1 cal/cm^2 as measured with copper calorimeter. The copper calorimeter shall be the only heat sensor used in setting the 2.0 $cal \cdot cm^2/sec$ exposure condition. The total heat flux shall be calculated directly from the temperature response of the copper calorimeter constants. Other heat-sensing devices shall not be used to reference or adjust the heat flux read by the copper calorimeter. The 2.0 $cal \cdot cm^2/sec$ exposure shall be determined directly and only from the voltage output of the thermocouple, rising the measured temperature rise of the copper calorimeter, the area and mass of the calorimeter, and the heat capacity of copper to calibrate the incoming heat flux.

6-10.5.3 The abraded specimens shall then be placed in the specimen holder so that the abraded area will be centered in the opening of the specimen holder. The sensing device shall be placed in contact with the back of the specimen holder and then both shall be placed in front of the heat source so that the distance from the specimen to the nearest edge of the lamp surface is exactly 25 mm (1 in.). A hand- or mechanical-operated shutter device shall be placed between the specimen holder containing the test specimen and the lamps to completely block the heat from reaching the specimen when lamps are first turned on. The lamps shall be turned on for a 60 second warm-up period. With the lamps still turned on, the shutter shall be removed from the front of the test specimen and the recorder started. The specimen shall be exposed to the heat for 25 seconds, then the current shall be turned off.

6-10.5.4 The radiant reflective value shall be graphically determined from the recorder chart of the sensor response and the overlay prepared in 6-10.4.1 of this section. The overlay shall be positioned on the recorder chart, matching the zero of the overlay with the start of the exposure. The horizontal axis shall be placed in line with the initial trace of the pen. While keeping the overlay square with the recorder chart, the time in seconds shall be read from the overlay chart where the sensor response curve and the overlay curve intersect. The time in seconds shall be called the radiant reflective value for the test specimen.

6-10.6 Report.

6-10.6.1 Five specimens shall be run, and the radiant reflective value shall be determined.

6-10.6.2 The average radiant reflective value of the five specimens shall be calculated and reported.

6-10.7 Interpretation. The average radiant reflective value of all specimens of an item shall be used to determine pass/fail.

6-10.8 Modifications for Testing Garment Outer Shell and Glove Outer Shell Materials.

6-10.8.1 The garment and glove outer shell material test specimens shall be 75 mm × 250 mm (3 in. × 10 in.) with the long dimension in the warp or wale direction.

6-10.8.2 Specimens shall be tested as specified in 6-10.2 through 6-10.7.

6-10.9 Modifications for Testing Footwear.

6-10.9.1 Footwear specimens shall be five 75-mm × 250-mm (3-in. × 10-in.) pieces cut from the thinnest portions of the footwear upper, or from a composite that is representative of footwear upper construction at the thinnest part.

6-10.9.2 Specimens shall be tested as specified in 6-10.2 through 6-10.7.

6-11 Radiant Heat Transmittance, Test Three.

6-11.1 Application. This test shall apply to helmet shell systems.

6-11.2 Samples. One sample helmet shell, with any reflective outer covering in place as intended for use but with all shock absorbing and/or thermally insulating materials removed from the interior shall be used.

6-11.3 Specimen Preparation. Specimens shall be conditioned as specified in 6-1.3.2.

6-11.4 Apparatus.

6-11.4.1 The test apparatus shall be the radiant exposure chamber as specified in 6-1.6, Radiant Heat Environmental Conditioning Procedure for Helmets.

6-11.4.2 The sensor shall be an exposed bead Type J or K30 AWG thermocouple that will be connected to a recording device that is capable of reading degrees centigrade.

6-11.5 Calibration Procedure. The chamber shall be calibrated according to the calibration procedure specified in 6-1.6, Radiant Heat Environmental Conditioning Procedure for Helmets, to obtain a stable uniform irradiance of 1.0 ± 0.1 W/cm^2.

6-11.6 Procedure.

6-11.6.1 One specimen helmet shell, with any reflective outer covering in place as intended for use but with all shock absorbing and/or thermally insulating materials removed from the interior, shall be used.

6-11.6.2 An exposed bead Type J or K30 AWG thermocouple shall be fastened to the inner surface of the specimen helmet shell in such a way that the thermocouple bead is in contact with the shell material. The thermocouple bead shall be permitted to be placed at any location within a 100-mm (4-in.) diameter of where the front rear axis of the center line of shell and the intersection of the bitragion coronal are met. There shall be no internal or external projections greater than 2 mm ($^1/_{16}$ in.) in height on the shell within 25 mm (1 in.) of the thermocouple bead in any direction. The thermocouple shall be connected to a recording device that reads degrees centigrade.

6-11.6.3 The specimen helmet with thermocouple shall be placed in the radiant exposure chamber specified in 6-1.6. With the radiant panel adjusted to provide a stable uniform irradiance of $1.0 \pm$ W/cm^2 in accordance with 6-1.6, the sample shall be placed in the chamber so that the thermocouple location is in the center of the area of radiant exposure.

Copyright National Fire Protection Association
Provided by IHS under license with NFPA
No reproduction or networking permitted without license from IHS
Not for Resale

6-11.6.4 The specimen shall be exposed to an irradiance of 1.0 ± 0.1 W/cm^2 for 180 seconds.

6-11.6.5 Thermocouple temperatures shall be recorded at the beginning and at the end of the 180 seconds.

6-11.7 Report. The difference of the initial temperature and the temperature at 180 seconds shall be reported.

6-11.8 Interpretation. Any rise in temperature greater than 25°C shall constitute failure of this test.

6-12 Conductive and Compressive Heat Resistance Test (CCHR).

6-12.1 Application. This test method shall apply to the shoulder areas and the knee areas of proximity protective garments.

6-12.2 Samples.

6-12.2.1 Samples shall consist of composites representative of all layers of the shoulder areas and knee areas used in the actual construction of the proximity protective garment. Different samples shall be made representing each different composite combination used by the garment manufacturer.

6-12.2.1.1 Samples of garment shoulder areas shall be representative of the area in the actual garment that measures at least 100 mm (4 in.) along the crown of the shoulder and extending down from the crown on both the front and back of the garment at least 50 mm (2 in.). The crown of the shoulder shall be the uppermost line of the shoulder when the garment is lying flat on an inspection surface with all closures fastened.

6-12.2.1.2 Samples of garment knee areas shall be representative of the knee area in the actual garment that measures at least 150 mm × 150 mm (6 in. × 6 in.).

6-12.2.2 Samples shall measure 200 mm × 200 mm (8 in. × 8 in.) and shall be prepared of the composite layers. The sample of the composite layers shall be sewn along two adjacent sides, with the layers arranged in the same order and orientation as intended to be worn.

6-12.2.3 All samples shall first be preconditioned as specified in 6-1.2. The outer shell shall be omitted from the samples for the preconditioning in accordance with 6-1.2, but shall be reintroduced to the samples following the preconditioning in the proper order and orientation as intended to be worn.

6-12.3 Specimen Preparation.

6-12.3.1 A minimum of six specimens for testing shall be taken from the samples after the preconditioning specified in 6-12.2.3.

6-12.3.2 Specimens shall measure 150 mm × 150 mm (6 in. × 6 in.) and shall be cut from the sample excluding the sewn areas so that the composite layers comprising the specimen are not sewn together at any point. Specimen composites shall include the outer shell.

6-12.3.3 Specimens, including the outer shells, for both wet condition testing and dry condition testing shall then be conditioned as specified in 6-1.3.

6-12.3.4 For wet condition testing only, the innermost layer of the composite specimen shall then be further conditioned as follows prior to testing:

(1) Blotter paper measuring 225 mm × 225 mm (9 in × 9 in.) shall be saturated in distilled water.
(2) Two sheets of the saturated blotter paper shall be run together through a wringer that meets the requirements of paragraph 10.2 of AATCC 70, *Test Method for Water Repellency: Tumble Jar Dynamic Absorption Test.*
(3) The innermost layer of the composite specimen shall be placed between the two sheets of blotting paper.
(4) The innermost layer of the composite specimen, between the two sheets of blotting paper, shall be placed into a 4 L (1 gal) airtight and liquidtight bag and the bag shall be sealed closed.
(5) The innermost layer of the composite specimen, between the two sheets of blotting paper, shall be conditioned in the airtight and liquidtight bag at room temperature for at least 24 hours, and shall not be removed from conditioning more than 5 minutes prior to testing.
(6) After removal from conditioning, the innermost layer shall be removed from the blotting paper, and the composite specimen shall be resembled with all layers arranged in the same order and orientation as intended to be worn.

6-12.4 Procedure.

6-12.4.1 A minimum of six specimens shall be tested for shoulder areas, three for wet condition testing, and three for dry condition testing; and a minimum of six specimens shall be tested for knee areas, three for wet condition testing, and three for dry condition testing.

6-12.4.2 Specimens shall be tested in accordance with ASTM F 1060, *Standard Test Method for Thermal Protective Performance of Materials for Protective Clothing for Hot Surface Contact*, with the modifications specified herein.

6-12.4.3 Specimens shall be tested using an exposure temperature of 280°C, +3°/−0°C (536°F, +5°/−0°F).

6-12.4.4 For the shoulder area CCHR rating, the sensor assembly shall be modified so that the pressure applied to the test specimens shall be 8 g/cm^2, ±0.8 g/cm^2 (2 psi, ±0.2 psi).

6-12.4.5 For the knee area CCHR rating, the sensor assembly shall be modified so that the pressure applied to the test specimens shall be 32 g/cm^2, ±3.2 g/cm^2 (8 psi, ±0.08 psi).

6-12.4.6 The CCHR rating for each specimen in each test shall be the time in seconds to achieve a temperature rise of 24°C.

6-12.4.7 For purposes of calculating the time to a 24°C temperature rise, the room temperature in the testing area shall be determined immediately prior to starting the test. That temperature shall be used as the base temperature in determining the 24°C rise. The time shall be measured to the nearest tenth of a second. Time "zero" shall be the time that the sensor and specimen are placed in direct contact with the exposure surface.

6-12.5 Report.

6-12.5.1 The individual CCHR rating for each specimen in each test shall be reported.

6-12.5.2 The average CCHR rating for the shoulder area wet condition test specimens shall be calculated and reported. The average CCHR rating for the shoulder area dry condition test specimens shall be calculated and reported.

6-12.5.3 The average CCHR rating for the knee area wet condition test specimens shall be separately calculated and reported. The average CCHR rating for the knee area dry condition test specimens shall be separately calculated and reported.

Copyright National Fire Protection Association
Provided by IHS under license with NFPA
No reproduction or networking permitted without license from IHS
Not for Resale

6-12.6 Interpretation.

6-12.6.1 Pass/fail determination for shoulder area wet condition test specimens shall be based on the average reported CCHR rating of all wet specimens. Pass/fail determination for shoulder area dry condition test specimens shall be based on the average reported CCHR rating of all dry specimens tested.

6-12.6.2 Pass/fail determination for knee area wet condition test specimens shall be based on the average reported CCHR rating of all wet specimens. Pass/fail determination for knee area dry condition test specimens shall be based on the average reported CCHR rating of all dry specimens tested.

6-12.6.3 If an individual CCHR rating from any individual test set varies more than ±8 percent from the average results for that test set, the results for that test set shall be discarded and another set of specimens shall be tested.

6-13 Thermal Protective Performance (TPP) Test.

6-13.1 Application.

6-13.1.1 This test method shall apply to multilayer proximity protective garment composites, shrouds, wristlets, and gloves.

6-13.1.2 Modifications to this test method for testing garment and shroud composites shall be as specified in 6-13.8.

6-13.1.3 Modifications to this test method for testing wristlets shall be as specified in 6-13.9.

6-13.1.4 Modifications to this test method for testing gloves shall be as specified in 6-13.10.

6-13.2 Specimens.

6-13.2.1 Thermal protective performance testing shall be conducted on three specimens.

6-13.2.2 Specimens shall measure 150 mm × 150 mm, ±6 mm (6 in. × 6 in., $\pm^1/_4$ in.) and shall consist of all layers representative of the clothing item to be tested.

6-13.3 Sample Preparation. Specimens shall be tested both before and after preconditioning as specified in 6-1.2 and then conditioning as specified in 6-1.3.

6-13.4 Apparatus.

6-13.4.1 The test apparatus shall consist of a specimen holder assembly, specimen holder assembly support, thermal flux source, protective shutter, sensor assembly, and recorder. The apparatus shall also have a gas supply, gas rotameter, burners, and sensor.

6-13.4.1.1 The specimen holder assembly shall consist of upper and lower mounting plates. Specimen holder mounting plates shall be 152 mm × 152 mm, ±2 mm, × 6 mm, ±1 mm (6 in. × 6 in., $\pm^1/_{16}$ in. × $^1/_4$ in., $\pm^1/_{25}$ in.). The lower specimen mounting plate shall have a centered 102-mm × 102-mm, ±2 mm (4-in. × 4-in., $\pm^1/_{16}$ in.) hole. The upper specimen mounting plate shall have a centered 133.4-mm × 133.4-mm, ±1.6 mm ($5^1/_4$-in. × $5^1/_4$-in., $\pm^1/_{16}$ in.) hole. The lower specimen mounting plate shall have a 25-mm, ±2 mm high, × 3-mm, ±1 mm thick (1-in., $\pm^1/_{16}$ in. high, × $^1/_8$-in., $\pm^1/_{25}$ in.) steel post welded to each corner 6.4 mm, ±1.6 mm ($^1/_4$ in., $\pm^1/_{16}$ in.) from each side and perpendicular to the plane of the plate, or some other method for aligning the specimen shall be provided. The upper sample mounting plate shall have a corresponding hole in each corner so that the upper specimen mounting plate fits over the lower specimen mounting plate. Specifications for the specimen holder assembly shall be as shown in Figure 6-13.4.1.1.

FIGURE 6-13.4.1.1 Lower specimen mounting plate.

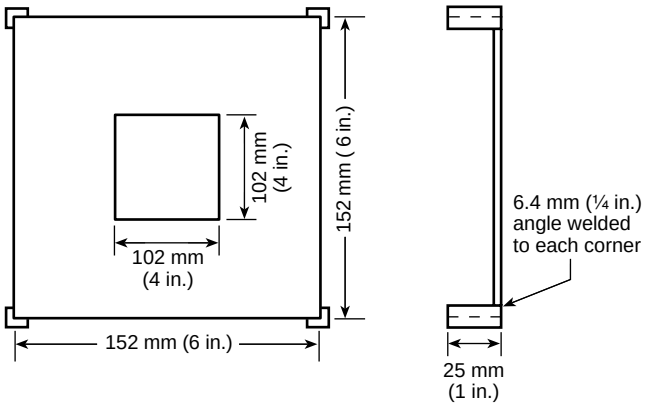

6-13.4.1.2 The specimen holder assembly support shall consist of a steel frame that rigidly holds and positions in a reproducible manner the specimen holder assembly and specimen relative to the thermal flux.

6-13.4.1.3 The thermal flux source shall consist of a convective thermal flux source and a radiant thermal flux source. The convective thermal flux source shall consist of two Meker or Fisher burners that are affixed beneath the specimen holder assembly opening and are subtended at a nominal 45 degree angle from the vertical so that the flames converge at a point immediately beneath the specimen. The radiant thermal flux source shall consist of nine quartz T-150 infrared tubes affixed beneath and centered between the burners as shown in Figure 6-13.4.1.3.

FIGURE 6-13.4.1.3 Specifications for TPP tester thermal flux source.

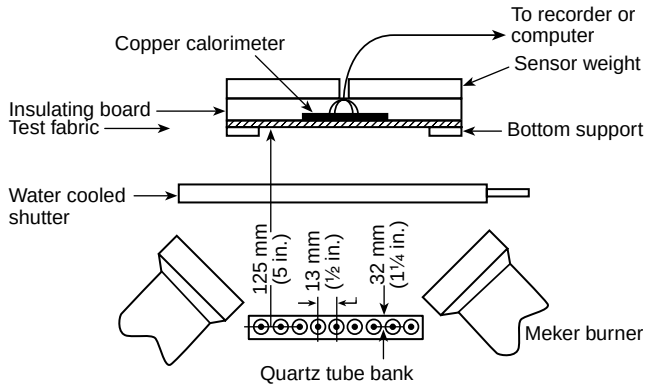

6-13.4.1.4 A protective shutter shall be placed between the thermal flux source and the specimen. The protective shutter shall be capable of completely dissipating thermal load from the thermal flux source of the time periods before and after specimen exposure.

6-13.4.1.5 The sensor assembly shall be fitted into the opening in the top plate of the specimen holder and be in contact with the surface of the thermal barrier normally facing the wearer, as detailed in Figure 6-13.4.1.10. The sensor assembly shall consist of a 130 mm × 130 mm × 13 mm ($5^1/_4$ in. × $5^1/_4$ in. × $^1/_2$ in.) heat-resistant block that fits without binding into the hole of the upper specimen mounting plate and shall be uniformly

Copyright National Fire Protection Association
Provided by IHS under license with NFPA
No reproduction or networking permitted without license from IHS
Not for Resale

weighted such that the complete sensor assembly, including copper calorimeter, weighs 1000 g, ±10 g (2.2 lb, ±0.02 lb).

6-13.4.1.6 The recorder shall be any strip chart recorder with full-scale deflection of at least 150°C (300°F) or 10 mV and sufficient sensitivity and scale divisions to read exposure time to ±0.1 second. Alternatively, an equivalent automated data acquisition system meeting or exceeding the sensitivity and accuracy requirements of the strip chart recorder shall be permitted to be used instead of a strip chart recorder.

6-13.4.1.7 The gas supply shall be propane, methane, or natural gas with appropriate reducer and valving arrangements to control the gas supply gauge pressure at 8 psi, ± 0.1 psi and capable of providing flow equivalent to 2 L/min (0.07 ft^3/min) air at standard conditions.

6-13.4.1.8 The gas rotameter shall be any gas rotameter with range to give flow equivalent to 2 L (0.07 ft^3/min) air at standard conditions.

6-13.4.1.9 The burners shall be Meker or Fisher burners with a 38-mm, ±2 mm ($1^1/_2$-in., $\pm^1/_{10}$ in.) diameter top and with an orifice size of 1 mm (0.05 in.).

6-13.4.1.10 The sensor shall be a copper calorimeter mounted in an insulating block. The calorimeter shall conform to the specifications provided in Figure 6-13.4.1.10. The sensor shall be coated with a flat black paint.

FIGURE 6-13.4.1.10 Sensor assembly.

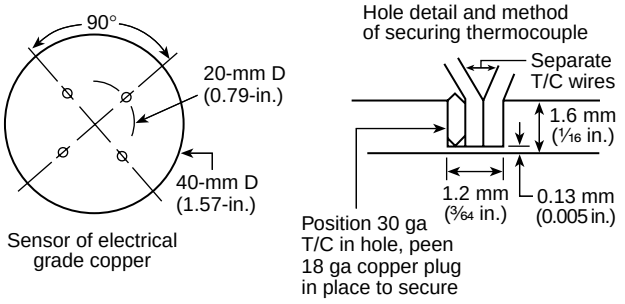

Details of calorimeter construction

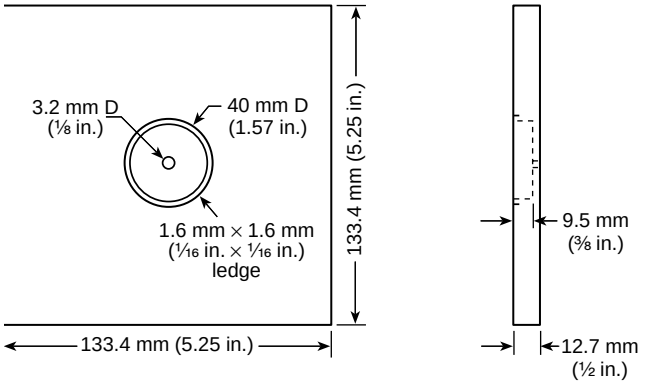

Sensor support of soft insulation board

Connect 4 T/C in parallel, silver solder connections. Bring common lead out of center hole of support. Secure sensor into support with three or four sewing pins cut to 9.5 mm (⅜ in.) long.

Note: Calorimeters painted with flat black paint.

6-13.4.2 A radiometer shall be used in the calibration of the test apparatus.

6-13.4.2.1 The radiometer shall be a Gardon-type radiation transducer with a diameter of 25 mm (1 in.). The heat flux operating range shall be from 0 kW/m^2 to 60 kW/m^2 (0 cal·cm^2/sec to 1.4 cal·cm^2/sec or 0 Btu·ft^2/sec to 5 Btu·ft^2/sec).

6-13.4.2.2 The radiometer shall be water-cooled, and the cooling water temperature shall be above the ambient dew point temperature.

6-13.5 Procedure.

6-13.5.1 General Procedures.

6-13.5.1.1 All testing and calibration shall be performed in a hood or ventilated area to carry away combustion products, smoke, or fumes. If air currents disturb the flame, the apparatus shall be shielded. Procedures for testing and calibration shall be performed using the same hood and ventilation conditions.

6-13.5.1.2 Care shall be exercised in handling the burner with open flame. Adequate separation shall be maintained between flame and combustible materials. Because the specimen holder and sensor assembly become heated during prolonged testing, protective gloves shall be used when handling these hot objects. Because some test specimens become hazardous when exposed to direct flame, care shall be used when the specimen ignites or releases combustible gases. If specimens ignite, the gas supply at the cylinder shall be shut off and the flame shall be allowed to burn the gas.

6-13.5.2 Calibration Procedure.

6-13.5.2.1 Specimens shall be exposed to a thermal flux of 83 kW/m^2, ±4 kW/m^2 (2.0 cal·cm^2/sec, ±0.1 cal·cm^2/sec) as measured with the copper calorimeter. The copper calorimeter shall be the only heat sensor used in setting the total 83 kW/m^2 (2 cal·cm^2/sec) exposure condition. The total heat flux shall be calculated directly and only from the voltage output of the thermocouples, using the measured temperature rise of the testing copper calorimeter, the area and mass of the calorimeter, and the heat capacity of copper to calibrate the heat flux. Other heat-sensing devices shall not be used to reference or adjust the total heat flux read by the copper calorimeter.

6-13.5.2.2 The total heat flux and the 50/50 percent, ±5 percent radiant/convective balance of the energy sources shall be set in accordance with the procedures in 6-13.5.2.3 through 6-13.5.2.6. The level of the radiant heat flux shall be determined using a radiometer and the level of the total heat flux shall be determined by using a calibration copper calorimeter designated and used only to set the total exposure level.

6-13.5.2.3 Once an initial setting of 12 kW/m^2, ±1.2 kW/m^2 (0.3 cal·cm^2/sec, ±0.1 cal·cm^2/sec) has been made to the array of new quartz lamps, the operating voltage shall be recorded and permanently retained for test purposes. During all future calibration procedures, the voltage setting of the quartz lamps shall be compared to the current voltage setting of the new quartz lamps, and if the voltage increase is 5 V or greater from the initial setting, the lamps shall be replaced.

6-13.5.2.4* The two Meker or Fisher burners shall be adjusted initially so that the flames converge on each other just below the center of the radiometer. The color of the flame shall be primarily blue.

Copyright National Fire Protection Association
Provided by IHS under license with NFPA
No reproduction or networking permitted without license from IHS
Not for Resale

6-13.5.2.5 The radiant thermal flux source of nine quartz infrared tubes alone shall be set to an incoming radiant heat flux of 12 kW/m^2, ±4 kW/m^2 (0.3 cal·cm^2/sec, ±0.1 cal·cm^2/sec) using a commercial radiometer meeting the specifications of 6-13.4.2. The radiometer window shall be positioned at the geometric center of the sample holder and at the same plane as a test specimen. The radiometer shall be mounted in a holder of the same overall size, shape, and material as the one used for the copper calorimeter to ensure similar heat and flame patterns across the faces of the radiometer and calorimeters. The radiant quartz tubes shall be turned to the on position for a minimum of 2 minutes prior to measuring the radiant heat flux.

6-13.5.2.6 The total heat flux shall be set at 83 kW/m^2, ±4 kW/m^2 (2.0 cal·cm^2/sec, ±0.1 cal·cm^2/sec) using the calibration copper calorimeter, defined in 6-13.4.1.10, by adjusting only the gas supply to the Meker or Fisher burners. Without a mounted specimen, the calibration copper calorimeter shall be placed on top of the specimen holder with the blackened copper calorimeter facing down, and then exposed directly to the flame of the burner. The response of the calorimeter shall be recorded for at least 10 seconds. The lowest temperature point on the curve where the response is linear shall be chosen, and the increase in sensor temperature for 10 seconds of heating shall also be determined. The initial reading from the 10-second reading shall be subtracted to obtain the increase. The response shall be 148°C, ± 4°C (267°F, ± 7°F), equivalent to 7.86 mV, ± 0.20 mV for an iron-constantan thermocouple for an exposure heat flux of 83 kW/m^2, ±2 kW/m^2 (2.0 cal·cm^2/sec, ±0.05 cal·cm^2/sec).

6-13.5.3 Test Procedure.

6-13.5.3.1 After the total thermal heat flux has been set at 83 kW/m^2, ±4 kW/m^2 (2.0 cal·cm^2/sec, ± 0.1 cal·cm^2/sec) using the calibration procedure in 6-13.5.2.4 through 6-13.5.2.6, the testing copper calorimeter shall be used to measure the total heat flux. Prior to testing, the testing copper calorimeter shall be used to measure the total heat flux by placing the calorimeter face down, then exposing it directly to the total heat source. The response of the calorimeter shall be recorded for at least 10 seconds. The lowest temperature point on the curve where the response is linear shall be chosen, and the increase in sensor temperature for 10 seconds of heating shall be determined. The initial reading from the 10-second reading shall be subtracted to obtain the increase. The response shall be 148°C, ±4°C (267°F, ±7°F) equivalent to 7.86 mV, ±0.20 mV for an iron-constantan thermocouple for an exposure heat flux of 83 kW/m^2, ±2 kW/m^2 (2.0 cal·cm^2/sec, ±0.05 cal·cm^2/sec).

6-13.5.3.2 If the measurement from the testing copper calorimeter is within +4/−0 kW/m^2 (+0.1/−0 cal·cm^2/sec), then testing shall be done. If the measurement from the testing copper calorimeter does not agree within +4/−0 kW/m^2 (+0.1/−0 cal·cm^2/sec) of the measurement of the calibration calorimeter, the testing copper calorimeter shall be repaired, reconditioned, or replaced to achieve agreement.

6-13.5.3.3 Specimens shall be mounted by placing the surface of the material to be used as the outside of the garment face down on the mounting plate. The subsequent layers shall be placed on top in the order used in the garment, with the surface to be worn toward the skin facing up. With the protective shutter engaged, the specimens shall be placed on the specimen holder.

6-13.5.3.4 The testing copper calorimeter shall be placed directly on the specimen in contact with the surface to be worn toward the skin.

6-13.5.3.5 The protective shutter shall be retracted and chart paper movement on the recorder shall be started using a chart speed consistent with the preparation of the overlay described in 6-13.5.4.1. The start time of the exposure shall be indicated. The exposure shall be continued for 30 seconds. The protective shutter shall be engaged (closed), the recorder shall be stopped, the calorimeter shall be removed and cooled, and then the specimen holder and exposed specimen shall be removed.

6-13.5.3.6 After each exposure, the calorimeter shall be cooled to 33°C, ±1°C (91°F, ±2°F) before the next heat flux determination. The sensor shall be cooled after exposure with a jet of air or by contact with a cold surface.

6-13.5.3.7 The sensor face shall be wiped immediately after each run, while hot, to remove any decomposition products that condense and could be a source of error. If a deposit collects and appears to be thicker than a thin layer of paint, or is irregular, the sensor surface shall be reconditioned. The cooled sensor shall be carefully cleaned with acetone or petroleum solvent, making certain there is no ignition source nearby.

6-13.5.3.7.1* If copper is showing on the testing copper calorimeter, the surface shall be completely repainted with a thin layer of flat black spray paint. At least one calibration run shall be performed comparing the testing copper calorimeter with the calibration copper calorimeter.

6-13.5.3.7.2 If the testing calorimeter is in error by more than +4/−0 kW/m^2 (+0.1/−0 cal·cm^2/sec), all electrical connections and points where thermocouples are secured to the testing calorimeter shall be checked. Two more calibration runs shall be conducted by comparing the testing copper calorimeter with the calibration grade copper calorimeter. The average error shall be calculated. If the average error of the testing calorimeter is more than +4 kW/m^2 (+0.1 cal·cm^2/sec), then the testing calorimeter shall be repaired and recalibrated or the testing calorimeter shall be replaced.

Copyright National Fire Protection Association
Provided by IHS under license with NFPA
No reproduction or networking permitted without license from IHS
Not for Resale

Table 6-13.5.4.1 Human Tissue Tolerance to Second-Degree Burn

Exposure Time(s)	Heat Flux		Total Heat		Calorimeter* Equivalent		
	cal·cm²/s	kW/m²	cal·cm²/s	kW/m²	ΔT°F	ΔT°C	ΔmV
1	1.2	50	1.20	50	16.0	8.9	0.46
2	0.73	31	1.46	61	19.5	10.8	0.57
3	0.55	23	1.65	69	22.0	12.2	0.63
4	0.45	19	1.80	75	24.0	13.3	0.69
5	0.38	16	1.90	80	25.3	14.1	0.72
6	0.34	14	2.04	85	27.2	15.1	0.78
7	0.30	13	2.10	88	28.0	15.5	0.80
8	0.274	11.5	2.19	92	29.2	16.2	0.83
9	0.252	10.6	2.27	95	30.2	16.8	0.86
10	0.233	9.8	2.33	98	31.1	17.3	0.89
11	0.219	9.2	2.41	101	32.1	17.8	0.92
12	0.205	8.6	2.46	103	32.8	18.2	0.94
13	0.194	8.1	2.52	106	33.6	18.7	0.97
14	0.184	7.7	2.58	108	34.3	19.1	0.99
15	0.177	7.4	2.66	111	35.4	19.7	1.02
16	0.168	7.0	2.69	113	35.8	19.8	1.03
17	0.160	6.7	2.72	114	36.3	20.2	1.04
18	0.154	6.4	2.77	116	37.0	20.6	1.06
19	0.148	6.2	2.81	118	37.5	20.8	1.08
20	0.143	6.0	2.86	120	38.1	21.2	1.10
25	0.122	5.1	3.05	128	40.7	22.6	1.17
30	0.107	4.5	3.21	134	42.8	23.8	1.23

Stoll, A. M. and M. A. Chianta, "Method and Rating System for Evaluation of Thermal Protection," *Aerospace Medicine*, vol. 40, 1968, pp. 1232–1238.
*Iron–constantan thermocouple.

6-13.5.4 Preparation of Human Tissue Burn Tolerance Overlay.

6-13.5.4.1 Tolerance Overlay. The thermal end point shall be determined with a plot of energy versus the time to cause a second-degree burn in human tissue as shown in Table 6-13.5.4.1. The calorimeter equivalent from Table 6-13.5.4.1 that corresponds to the recorder scale shall be plotted on recorder chart paper. The columns ΔT°F, ΔT°C, and ΔmV (columns 6, 7, and 8) shall be plotted on the vertical axis, and the corresponding exposure time (column 1) shall be plotted on the horizontal axis. Chart units based on the recorder full-scale deflection and the chart speed for a graph directly comparable to the recorder sensor trace shall be used. If pen deflection is from left to right and paper movement is down, the plot shall be from right to left with origin at lower right. If recorder trace differs, the graph shall be adjusted accordingly. An exact transparent duplicate shall be made for the overlay. The overlay shall be compared with the original to ensure change in the overlay size.

6-13.5.4.2 Computer Processing of the Data. The information provided in Table 6-13.5.4.1 shall be permitted to be used as the criteria of performance in the software of a computer program. In this case, the sensor response shall be compared with the thermal response, either pain sensation or second-degree burn in human tissue, to determine the thermal end points. The product of the time to a second-degree burn in human tissue and the exposure energy heat flux shall be the TPP rating.

6-13.5.5 Determination of Test Results.

6-13.5.5.1 The time to the second-degree burn shall be graphically determined from the recorder chart of the sensor response and criterion overlay prepared in 6-13.5.4.1. The overlay shall be positioned on the recorder chart, matching the zero of the overlay with the exposure start time resulting from heat transfer. The horizontal axis (time) shall be placed in line with the initial trace of the pen, keeping the overlay square with the recorder chart. The time to the second-degree burn shall be read to the nearest 0.1 second from the overlay chart at the point when the sensor response curve and the tissue tolerance curve cross. If the sensor response curve and the tissue tolerance curves do not cross, "> 30" shall be recorded as the test result.

6-13.5.5.1.1 If a computer software program is used, the sensor response shall be compared with the data describing the human tissue heat tolerance to determine like values. The time from the start of the exposure to the time when these values are the same shall be taken at the exposure time.

6-13.5.5.2 The TPP rating shall be calculated as the product of exposure energy heat flux and time to burn as follows:

$$\text{TPP rating} = F \times T$$

where:

F = exposure energy heat flux (cal·cm²/sec)
T = time to burn (sec)

6-13.6 Report. The individual test TPP rating of each specimen shall be reported. The average TPP rating shall be calculated and reported. If a TPP rating is greater than 60, then the TPP rating shall be reported as "> 60."

Copyright National Fire Protection Association
Provided by IHS under license with NFPA
No reproduction or networking permitted without license from IHS
Not for Resale

6-13.7 Interpretation.

6-13.7.1 Pass/fail determinations shall be based on the average reported TPP rating of all specimens tested.

6-13.7.2 If an individual result from any test set varies more than ±8 percent from the average result, the results from the test set shall be discarded and another set of specimens shall be tested.

6-13.8 Specific Requirements for Testing Garments and Shrouds.

6-13.8.1 Specimens shall consist of outer shell, moisture barrier, and thermal barrier. Winter liners shall not be included in the test composite. Collar lining fabric shall be permitted to be included in the proximity protective garment collar fabric composite specimen. Specimens shall not include seams. Specimens shall not be stitched to hold individual layers together during testing.

6-13.8.2 Samples for conditioning shall be at least 1-m (1-yd) square of each material.

6-13.8.3 Testing shall be performed as described in 6-13.2 through 6-13.7.

6-13.9 Specific Requirements for Testing Protective Wristlets.

6-13.9.1 Specimens shall consist of materials from the portion of the protective wristlet that covers the wrist area. Specimens shall not include seams. Specimens shall not be stitched to hold individual layers together during testing.

6-13.9.2 Samples for conditioning shall include wristlet material that is a minimum of 180 mm (7 in.) square.

6-13.9.3 Testing shall be performed as described in 6-13.2 through 6-13.7.

6-13.10 Specific Requirements for Testing Protective Glove Body Composites and Gauntlets.

6-13.10.1 Specimens shall consist of the composites used in the actual glove construction, with the layers arranged in proper order. Both the composite representing the back of the glove and the palm of the glove shall be tested. Results of each composite glove back and glove palm shall be reported. Specimens shall not include seams, where multiple layers are involved. Specimens shall not be stitched to hold individual layers together during testing.

6-13.10.2 Samples for conditioning shall include glove materials that are a minimum of 180 mm (7 in.) square consisting of the composite used in the actual glove construction, with the layers arranged in proper order and stitched using the same thread used in the construction of the glove.

6-13.10.3 Testing shall be performed as described in 6-13.2 through 6-13.7.

6-14 Thread Melting Test.

6-14.1 Application. This test shall apply to sewing thread used in the construction of all proximity protective elements.

6-14.2 Specimens. Three different specimens shall be tested.

6-14.3 Sample Preparation. Specimens shall be conditioned as specified in 6-1.3.

6-14.4 Procedure. Specimens shall be tested in accordance with Test Method 1534, "Melting of Synthetic Fiber" of Federal Test Method Standard 191A, *Textile Test Methods*, at a test temperature of 260°C (500°F).

6-14.5 Report. The condition of specimens shall be observed at 260°C (500°F).

6-14.6 Interpretation. Any specimen exhibiting melting at 260°C (500°F) shall constitute failure of this test.

6-15 Tear Resistance Test.

6-15.1 Application. This test shall apply to woven and nonwoven materials used in proximity protective garments, helmet outer covers, and helmet shrouds.

6-15.2 Sample Preparation.

6-15.2.1 Samples for conditioning shall be at least 1-m (1-yd) square of material.

6-15.2.2 The moisture and thermal barriers of samples shall be conditioned as specified in 6-1.2. The outer shell component shall be conditioned as specified in 6-1.3.

6-15.3 Specimens.

6-15.3.1 A minimum of five specimens in each of the warp directions, machine or coarse, and the filling directions, cross-machine or wales, shall be tested.

6-15.3.2 If the material is non-anisotropic, then 10 specimens shall be tested.

6-15.4 Procedure. Specimens shall be tested in accordance with ASTM D 5733, *Standard Test Method for Tearing Strength of Nonwoven Fabrics by the Trapezoid Procedure.*

6-15.5 Report.

6-15.5.1 The tear strength of an individual specimen shall be the average of the five highest peak loads of resistance registered.

6-15.5.2 The tear strength of each specimen shall be reported to the nearest 45 g ($1^1/_2$ oz).

6-15.5.3 An average tear strength shall be calculated for warp and filling directions.

6-15.6 Interpretation.

6-15.6.1 Pass/fail performance shall be based on the average tear strength in the warp and filling directions.

6-15.6.2 Failure in any one direction constitutes failure for the material.

6-16 Burst Strength Test.

6-16.1 Application. This test shall apply to knit materials used in proximity protective garments and wristlets.

6-16.2 Specimens. A total of ten specimens shall be tested.

6-16.3 Sample Preparation.

6-16.3.1 Specimens shall be conditioned as specified in 6-1.3.

6-16.3.2 Samples for conditioning shall be 1-m (1-yd) square of material.

6-16.4 Procedure. Specimens shall be tested as specified in ASTM D 3787, *Standard Test Method for Hydraulic Bursting Strength of Knitted Goods and Nonwoven Fabrics—Ball Burst Testing Method.*

Copyright National Fire Protection Association
Provided by IHS under license with NFPA
No reproduction or networking permitted without license from IHS
Not for Resale

6-16.5 Report.

6-16.5.1 The burst strength of each specimen shall be reported.

6-16.5.2 The average burst strength of all specimens shall be calculated and reported.

6-16.6 Interpretation. The average burst strength shall be used to determine pass/fail performance.

6-17 Seam Breaking Strength Test.

6-17.1 Application. This test shall apply to seams used in proximity protective garments.

6-17.2 Specimens.

6-17.2.1 A minimum of five seam specimens representative of the garment shall be tested for each seam type.

6-17.2.2 The five seam specimens shall be straight seams. Seam specimens shall be permitted to be cut from the finished garment or shall be permitted to be prepared by joining two pieces of the garment fabric.

6-17.2.2.1 Where two pieces of woven garment fabric are joined, the woven fabric seam specimen shall be prepared as specified in 8.2.1.2 of ASTM D 1683, *Standard Test Method for Failure in Sewn Seams of Woven Fabrics*, and shall use the same thread, seam type, and stitch type as used in the finished garment.

6-17.2.2.2 Where two pieces of knit or stretch woven garment fabric are joined, the knit fabric seam specimen shall be prepared as specified in 7.2.2 of ASTM D 3940, *Standard Test Method for Bursting Strength (Load) and Elongation of Sewn Seams of Knit or Woven Stretch Textile Fabrics*, using the same thread, seam type, and stitch type as used in the finished garment.

6-17.2.2.3 Specimens of garment seam assemblies constructed from other than woven or knit textiles shall be tested as specified in 6-17.2.2.1.

6-17.2.2.4 Where a piece of woven garment fabric and a knit or stretch woven fabric are joined, the seam specimen shall be prepared as specified in 8-2.1.2 of ASTM D 1683, *Standard Test Method for Failure in Sewn Seams of Woven Fabrics*, and shall use the same thread, seam type, and stitch type as used in the finished garment.

6-17.3 Sample Preparation. Samples for conditioning shall be 1-m (1-yd) square of material.

6-17.4 Procedure.

6-17.4.1 All woven seam assemblies shall be tested in accordance with ASTM D 1683, *Standard Test Method for Failure in Sewn Seams of Woven Fabrics*. The test machine shall be operated at a rate of 305 mm/min (12 in./min).

6-17.4.2 All knit seam assemblies and all stretch woven seam assemblies shall be tested in accordance with ASTM D 3940, *Standard Test Method for Bursting Strength (Load) and Elongation of Sewn Seams of Knit or Woven Stretch Textile Fabrics*.

6-17.4.3 Combination woven and knit or stretch woven seam assemblies shall be tested in accordance with ASTM D 1683, *Standard Test Method for Failure in Sewn Seams of Woven Fabrics*. The test machine shall be operated at a rate of 305 mm/min (12 in./min).

6-17.5 Report.

6-17.5.1 The seam breaking strength for each seam specimen shall be reported. The average seam breaking strength for each seam type shall also be reported.

6-17.5.2 The type of seams tested shall be reported as to whether the specimens were cut from the finished garment or prepared from fabric samples.

6-17.6 Interpretation. The average seam breaking strength for each seam type shall be used to determine pass/fail performance.

6-18 Top Impact Resistance Test (Force).

6-18.1 Application. This test shall apply to complete helmets.

6-18.2 Specimens. Specimens shall be selected as specified in 2-3.9.

6-18.3 Sample Preparation.

6-18.3.1 Samples for conditioning shall be complete helmets.

6-18.3.2 Specimens shall be conditioned for each environmental condition specified in 6-1.3, 6-1.4, 6-1.5, 6-1.6, and 6-1.7 prior to each impact.

6-18.4 Apparatus.

6-18.4.1 An aluminum ISEA size 7 headform shall be used. The headform shall have a mass of 3.6 kg, ±0.5 kg (8.0 lb, ±1.0 lb) and shall be of the nominal dimensions of the headform in Table 6-18.4.1 and Figures 6-18.4.1(a) through (c).

FIGURE 6-18.4.1(a) ISEA size 7 headform, top.

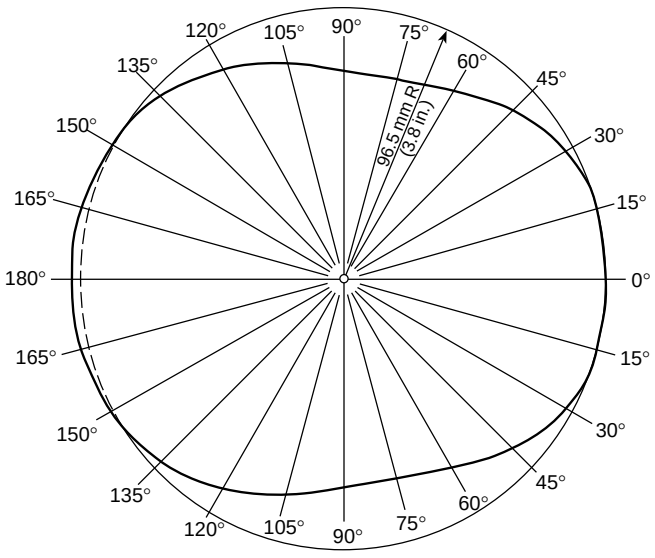

Copyright National Fire Protection Association
Provided by IHS under license with NFPA
No reproduction or networking permitted without license from IHS
Not for Resale

FIGURE 6-18.4.1(b) ISEA size 7 headform, side with modification for steel terminal junction bolt.

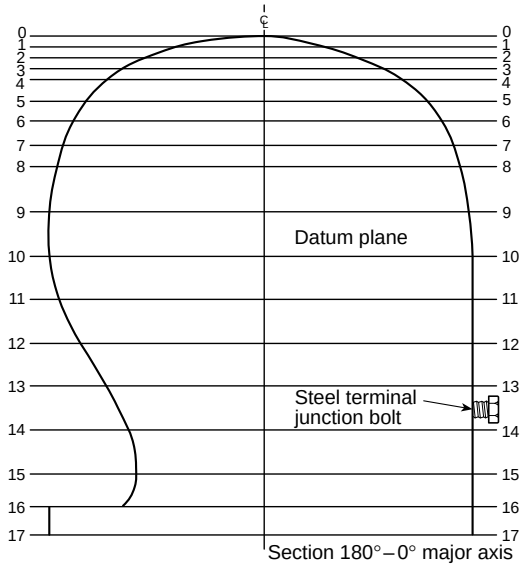

FIGURE 6-18.4.1(c) Size 7 headform, front.

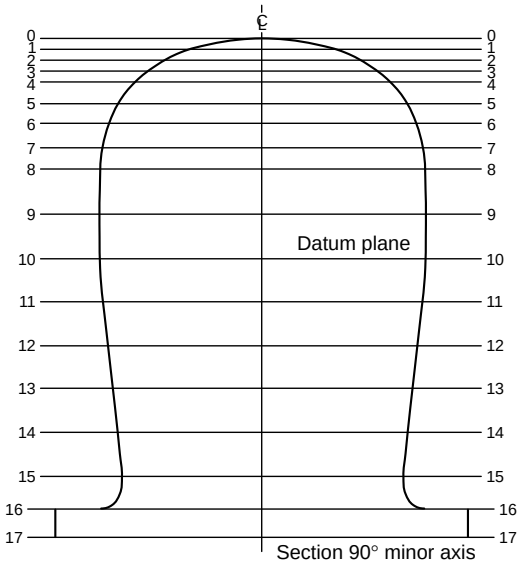

Table 6-18.4.1 Data for Contour Drawing of ISEA Headform (all dimensions in mm)

	Horizontal Plane	Distance from Datum Plane	Vertical Sections												
			0°	15°	30°	45°	60°	75°	90°	105°	120°	135°	150°	165°	180°
	0-0	99	0	0	0	0	0	0	0	0	0	0	0	0	0
	1-1	95	22.5	22.5	23	25.5	26.5	28	28.5	31	33	36	39	38.7	40
	2-2	90	39.5	40	40	40.5	40.5	40.5	41.5	43.5	47.5	50	53	53	54.5
	3-3	85	53.5	54	55.7	51.5	50.5	50	51.5	53.5	57	60.5	64	64.5	65.5
	4-4	80	62.5	63	60.9	59	57	57	57.5	60.5	63.5	67.3	70.7	70.7	72.2
	5-5	70	72.5	74	71.5	68.2	65.5	64.5	65.3	68	72	75.7	79.1	80	82
	6-6	60	82	82	79.5	75	71.0	69.4	70.1	73	77.5	81.7	85.1	87.5	87.9
	7-7	50	87.3	87	84.5	79	74	71.5	72	75.7	80.9	85.8	89.4	91	92.3
	8-8	40	90.2	90.5	87.5	81.5	75.5	73.0	73.5	76.9	82.7	88.3	91.3	93.5	95
	9-9	20	94.0	94	90.5	83.5	77.1	73.7	74.2	77.8	84.3	91	95.5	97.6	98.5
Datum plane	10-10	0	96.5	96.5	93.0	84.6	77.5	73.5	74.2	79	85	92.5	96.5	98.8	99.9
	11-11	20	96.5	96.5	93.0	84.6	77.5	73.5	72	70	78.5	84	90	91	95
	12-12	40	96.5	96.5	93.0	84.6	77.5	73.5	70	63.5	70	75	81	82	84
	13-13	60	96.5	96.5	93.0	84.6	77.5	73.5	68	58	57.5	63	69	69	72
	14-14	80	96.5	96.5	93.0	84.6	77.5	73.5	66	54	48	53	59	60	63
	15-15	100	96.5	96.5	93.0	84.6	77.5	73.5	64	52	48	49	54	56	59
	16-16	115.9	96.5	96.5	96.5	96.5	96.5	96.5	96.5	96.5	96.5	96.5	96.5	96.5	96.5
	17-17	128.6	96.5	96.5	96.5	96.5	96.5	96.5	96.5	96.5	96.5	96.5	96.5	96.5	96.5

Note: All dimensions ±5 mm.
For SI units, 1 in. = 25.4 mm.

6-18.4.2 A steel drop mass of 3.58 kg, ±0.05 kg (7.90 lb, ±0.10 lb) shall be used. The striking face of the drop mass shall be a spherical segment with a radius of 48 mm, ±8 mm (1.9 in., ±0.3 in.) and a chord length of at least 76 mm (3.0 in.).

6-18.4.3 An electronic force measurement system with the following minimum specifications shall be used:

(1) Range, 4450 N (1000 lbf)
(2) Peak force measurement accuracy, ±2.5 percent
(3) Resolution, 22 N (5 lbf)
(4) Load cell rigidity, 4.4×10^9 N/m (2.5×10^7 lbf/in.)
(5) Minimum mechanical resonant frequency of the headform/load cell system, 5000 Hz
(6) Load cell diameter, 76 mm (3 in.)

Copyright National Fire Protection Association
Provided by IHS under license with NFPA
No reproduction or networking permitted without license from IHS
Not for Resale

6-18.4.4 The system frequency response shall comply with SAE J211, *Instrumentation for Impact Test*, Channel Frequency Class 1000, specifications. The minimum mechanical resonant frequency shall be calculated from the following formula:

$$f = \frac{\sqrt{kg/m}}{2\pi}$$

where:

kg = the load cell rigidity [N/m (lbf/ft)]

m = the mass of the structure on top of the load cell [kg (slugs)]

6-18.4.5 All surfaces in contact with the load cell shall have a surface finish of at least 0.8×10^{-6}m (32×10^{-6} in.) rms. In addition, those surfaces in contact with the load cell shall be flat to within 12.7×10^{-6}m (500×10^{-6}in.).

6-18.4.6 The load cell shall have a backup mass of at least 540 kg (1200 lb). The load cell assembly shall be rigidly mounted between the headform structure and a steel plate at least 305 mm (1 ft) square and 25 mm (1 in.) thick. The backup mass shall be concrete or a rigid material of equal or greater density at least 610 mm (2 ft) square.

6-18.4.7 The surface of the steel plate, in the area of the load cell assembly mounting, shall be flat within ±0.15 mm (±0.005 in.) and within 1 degree of level. The steel plate shall be rigidly attached to, and in intimate contact with, the backup mass.

6-18.4.8 The vertical centerline of the drop mass, the headform, and the load cell shall all be colinear within 3 mm ($^1/_8$ in.). The sensitive axis of the load cell shall be aligned within 1 degree of vertical. The guide or guides shall be vertical, and in the case of a double guide system, parallel, to within 6 mm per 3 m ($^1/_4$ in. per 10 ft) of length.

6-18.4.9* The instrumentation calibration shall be verified at least before and after each test series or at the beginning and end of each day of testing, whichever is the shorter length of time.

6-18.4.10 The test system shall be analyzed dynamically to ensure that any mechanical resonance associated with transducer mountings does not distort the output data.

6-18.4.11 Prior to testing, the instrumentation shall be allowed to warm up until stability is achieved.

6-18.4.12 Throughout calibration, verification, and testing, the ambient temperature shall be 20°C to 28°C (68°F to 82°F), and the relative humidity shall be 30 percent to 70 percent.

6-18.5 Procedure.

6-18.5.1 Where faceshield component(s) are provided, the device shall be removed from the helmet for this test. Specimen helmets shall be adjusted to a size sufficient to properly fit on the headform. Specimens shall be positioned on the headform with the horizontal center plane parallel within 5 degrees of the reference plane. The front-to-back centerline of the shell shall be within 13 mm (0.5 in.) of the midsagittal plane of the headform. Specimens shall be subjected to the environmental conditions specified in 6-1.3, 6-1.4, 6-1.5, 6-1.6, and 6-1.7 prior to each impact and within the specified time after being removed from conditioning.

6-18.5.2 The impactor shall be dropped from a height that yields an impact velocity within 2 percent of 5.47 m/sec (17.9 ft/sec). A means of verifying the impact velocity to within 2 percent for each impact shall be incorporated.

6-18.5.3 The verification tests shall demonstrate an accuracy of 2.5 percent or better in the measured force.

6-18.6 Report.

6-18.6.1 The results of each system verification shall be made part of the test results for specimens being tested.

6-18.6.2 The peak force and impact velocity shall be recorded for each test.

6-18.7 Interpretation.

6-18.7.1 Pass/fail performance shall be determined for each specimen.

6-18.7.2 One or more helmet specimens failing this test shall constitute failing performance.

6-19 Impact Resistance Test (Acceleration).

6-19.1 Application. This test shall be applied to complete helmets.

6-19.2 Specimens. Specimens shall be selected as specified in 2-3.9.

6-19.3 Sample Preparation.

6-19.3.1 Specimens shall be conditioned for each environmental condition specified in 6-1.3, 6-1.4, 6-1.6, and 6-1.7 prior to each impact.

6-19.3.2 Samples for conditioning shall be complete helmets.

6-19.4 Apparatus.

6-19.4.1 An ISO size J headform conforming to the nominal dimensions in Figure 6-19.4.1 shall be used. The ISO size J test headform shall exhibit no resonant frequencies below 3000 Hz, and it shall be made of any low-resonance alloy, such as magnesium K-1A.

6-19.4.2 There shall be a drop assembly consisting of the test headform, the accelerometer, and the moving portion of the headform guidance assembly. The drop assembly shall have a total mass of 5.17 kg, ±0.18 kg (11.4 lb, ±0.4 lb).

6-19.4.3 The guidance assembly shall comprise not more than 20 percent of the total mass of the drop assembly.

6-19.4.4 The center of mass of the drop assembly shall lie within a cone of 10 degrees included angle about the vertical, with the apex at the point of impact.

--`,,,-`-`,,`,,`,`,,`---

Copyright National Fire Protection Association
Provided by IHS under license with NFPA
No reproduction or networking permitted without license from IHS
Not for Resale

FIGURE 6-19.4.1 Location of reference plane (all dimensions in mm).

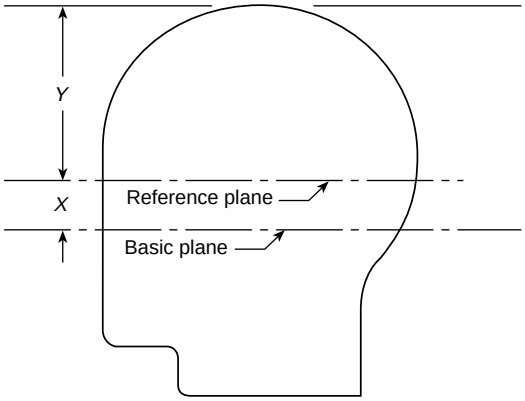

Headform	Size (mm)	*X* (mm)	*Y* (mm)
A	500	24	90
B	540	26	96
J	570	27.5	102.5
M	600	29	107
O	620	30	110

6-19.4.5 A steel test anvil shall be used and shall have a smooth, flat striking surface 127 mm, ±15 mm (5 in., $\pm^1/_2$ in.) in diameter. The anvil shall be mounted securely on a steel plate at least 305 mm (1 ft) square and 25 mm (1 in.) thick. The steel plate shall be rigidly attached to and in intimate contact with a backup mass of at least 540 kg (1200 lb). The backup mass shall be of concrete or a rigid material of equal or greater density at least 610 mm (2 ft) square.

6-19.4.6 An electronic acceleration measurement system with the following minimum specifications shall be used:

(1) Range, 500 Gn
(2) Peak acceleration measurement, ±2.5 percent accuracy
(3) Resonant frequency, 5000 Hz
(4) Accelerometer shock limit, 2000 Gn
(5) Resolution, 5 Gn

6-19.4.7 The system frequency response shall comply with SAE J211, *Instrumentation for Impact Test*, Channel Frequency Class 1000, specifications. The time duration of acceleration levels shall be measured to within ±0.2 millisecond.

6-19.4.8 A reference anvil shall be substituted for the test anvil to verify the calibration of the acceleration measurement system. The reference anvil shall be constructed of any material that will yield reproducible test results during a period of at least 4 months.

6-19.4.9* For calibration, the center of the reference anvil shall be aligned within 3 mm ($^1/_8$ in.) of the impact point on the headform. The sensitive axis of the accelerometer shall be aligned within 1 degree of vertical and shall be colinear within 3 mm ($^1/_8$ in.), with the center of the reference anvil and the impact point on the headform. The guide or guides shall be vertical and, in the case of a double guide system, parallel to within 6 mm/3 m ($^1/_4$ in./10 ft) of length.

6-19.4.10 The instrumentation calibration shall be verified at least before and after each test series or at the beginning and end of each day of testing, whichever is the shorter length of time.

6-19.4.11 The test system shall be analyzed dynamically to ensure that any mechanical resonance does not distort the output data.

6-19.4.12 Prior to testing, the instrumentation shall be allowed to warm up until stability is achieved.

6-19.4.13 Throughout calibration, verification, and testing, the ambient temperature shall be 20°C to 28°C (68°F to 82°F), and the relative humidity shall be 30 percent to 70 percent.

6-19.5 Procedure.

6-19.5.1 A conditioned specimen with faceshield component(s) removed shall be positioned on the headform with the horizontal center plane of the helmet parallel within 5 degrees of the reference plane of the headform and shall be secured to the drop assembly by its retention system so as to maintain this position during the test. No part of the helmet shell shall be cut away to accommodate the test system, and no part of the test system shall contact the helmet shell either as mounted or during an impact test.

6-19.5.2 The drop assembly with a helmet attached shall be dropped from a height that yields an impact velocity within 2 percent of 6.0 m/sec (19.7 ft/sec). A means of verifying the impact velocity within 2 percent for each impact shall be incorporated in the test system. The acceleration time duration values, peak acceleration, and impact velocity shall be recorded for each test. Each helmet shall be environmentally conditioned prior to each impact in each of the five impact areas specified in Figure 6-1.6.1. Test series number 1 shall require helmet specimens 5, 6, 8, and 10 to be impacted at the front, rear, side impact areas at a distance of 68 mm, +14/–0 mm ($2^1/_2$ in, $+^1/_2/-0$ in.) when measured from the test line to the center of the impact anvil.

6-19.5.3 The impact areas shall be as specified in Figure 6-1.6.1. The top, front, rear, and side areas of the helmet shall be tested.

6-19.5.4 The top impact area shall consist of a 30-mm ($1^3/_{16}$-in.) radius measured from a point located on the headform at the junction of the coronal and midsagittal planes.

6-19.5.5 The front impact test area shall consist of an area defined as extending forward on the headform from the front vertical transverse plane to the test line.

6-19.5.6 The rear impact test area shall consist of an area defined as extending backward on the headform from the rear vertical transverse plane extending down to the test line.

6-19.5.7 The side test areas shall consist of the areas between the top test area and test line extending from the rear vertical transverse plane and the front vertical transverse plane.

6-19.5.8 Each conditioned specimen in a series shall be impacted one on the top, rear, front, and side test areas of the helmets as defined in Figure 6-1.6.1. At least one impact shall occur in each test area.

6-19.5.9 The center of the test anvil shall be no lower than 68 mm ($2^1/_2$ in.) above the test line.

6-19.5.10 The verification tests shall demonstrate an accuracy of 20 percent or better in the measured acceleration.

6-19.6 Report.

6-19.6.1 The results of each system verification shall be made part of the test results for the specimens being tested.

Copyright National Fire Protection Association
Provided by IHS under license with NFPA
No reproduction or networking permitted without license from IHS
Not for Resale

6-19.6.2 The maximum acceleration, duration of acceleration above 200 Gn, and duration of acceleration above 150 Gn shall be recorded for each test.

6-19.7 Interpretation.

6-19.7.1 Pass/fail performance shall be determined for each specimen.

6-19.7.2 One or more helmet specimens failing this test shall constitute failing performance.

6-20 Faceshield Component Resistance Test.

6-20.1 Application. This test shall apply to complete helmets.

6-20.2 Specimens. A minimum of four complete faceshield components shall be tested.

6-20.3 Sample Preparation.

6-20.3.1 Samples shall be preconditioned for each of the environmental conditions specified in 6-1.3, 6-1.4, and 6-1.7.

6-20.3.2 Samples for conditioning shall be as defined in 6-20.2.

6-20.4 Test One, High-Mass Impact.

6-20.4.1 Apparatus.

6-20.4.1.1 An Alderson 50th percentile male headform, as specified in Figure 6-20.4.1.1, shall be used to hold the protective device. It shall be rigidly mounted in the horizontal position, face up, on a base that has a mass of 30 kg (66 lb) or greater. The static stiffness of the headform shall be such that, when a vertical downward force of 20 kg (44 lb) is applied to the forehead of the headform, the back of the headform shall not deflect more than 2 mm (0.08 in.).

FIGURE 6-20.4.1.1 Alderson headform.

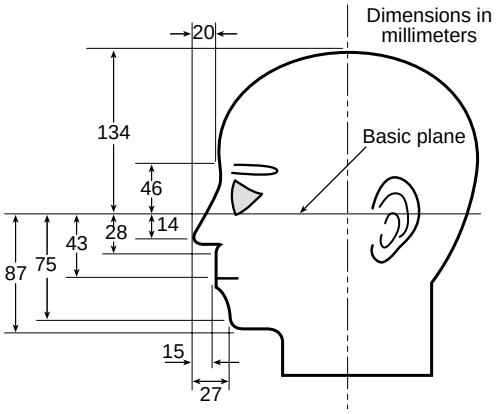

6-20.4.1.2 The missile shall have a 30 degree conical tip with a 1-mm (0.04-in.) radius, shall weigh 500 g (18 oz), and shall have a diameter of 25 mm (1 in.). The missile shall be held in position over the headform, tip down, at the designated test height. The missile shall have a heat-treated steel tip.

6-20.4.1.3* The missile shall be dropped through a loose-fitting guide tube having a smooth internal diameter.

6-20.4.2 Procedure.

6-20.4.2.1 Only one faceshield component shall be tested at a time.

6-20.4.2.2 The complete helmet shall be placed on the headform in accordance with the helmet positioning index. The alignment shall be such that, with the faceshield component deployed, when the missile is dropped, it points in line with one of the eyes of the headform.

6-20.4.2.3 The missile shall be dropped from a height of 1300 mm (51 in.). Four samples shall be tested.

6-20.4.3 Report. The pass/fail result for each device shall be reported.

6-20.5 Test Two, High-Velocity Impact.

6-20.5.1 Apparatus.

6-20.5.1.1* The test apparatus shall consist of a device capable of propelling a steel ball reproducible at the velocity designated at 250 ft/sec, the device shall show a sample standard deviation not greater than 2 percent of 250 ft/sec based on a test series of 30 shots. The velocity of the steel ball shall be determined at a distance not greater than 250 mm (10 in.) from point of impact. The projectiles used in this test shall be 6-mm ($^1/_4$-in.) diameter steel balls weighing approximately 1 g (0.04 oz). These balls are damaged during impact and shall be changed frequently to avoid impacts at unexpected locations and large variations in velocity.

6-20.5.1.2 An Alderson 50th percentile male headform, as specified in Figure 6-20.4.1.1, shall be used for mounting the helmet with faceshield component. The headform shall be capable of being rotated on a vertical axis through each corneal vertex in 15 degree increments, from a first position 15 degrees to the nasal side of straight-ahead-viewing out to 90 degree temporally (it is assumed that the headform is vertical such that the two eyes lie in a horizontal reference plane). The headform shall be capable of being raised 10 mm ($^{25}/_{64}$ in.) and lowered 10 mm ($^{25}/_{64}$ in.) with respect to the horizontal plane to carry out testing at the 90 degree angular position.

6-20.5.2 Procedure.

6-20.5.2.1 Only one faceshield component shall be tested at a time.

6-20.5.2.2 The helmet with faceshield component deploy shall be mounted to the Alderson 50th percentile male headform in accordance with the eye/face positioning index.

6-20.5.2.3 The headform shall be adjusted so that the path of the projectile passes through the center of the right eye. It is then rotated to the first test position, which shall be 15 degrees to the nasal side. The faceshield component shall be impacted at the test velocity. A new faceshield component shall be placed on the headform and impacted at 0 degrees. A new faceshield component shall be placed on the headform and impacted at 45 degrees. A new faceshield component shall be placed on the headform and impacted at 90 degrees. The impacts at the 45 degree and 90 degree positions shall be at either 10 mm ($^{25}/_{64}$ in.) above or 10 mm ($^{25}/_{64}$ in.) below the plane of the eyes.

6-20.5.2.4 The headform shall be adjusted so that the path of the projectile passes throughout the center of the left eye. It is then rotated to the first test position, which shall be 15 degrees to the nasal side. The faceshield component shall be impacted at the test velocity. A new faceshield component shall be placed on the headform and impacted at 0 degrees. A new faceshield component shall be placed on the headform and

Copyright National Fire Protection Association
Provided by IHS under license with NFPA
No reproduction or networking permitted without license from IHS
Not for Resale

impacted 45 degrees. A new faceshield component shall be placed on the headform and impacted at 90 degrees. The impacts at the 45 degree and 90 degree positions shall be at either 10 mm ($^{25}/_{64}$ in.) above or 10 mm ($^{25}/_{64}$ in.) below the plane of the eyes.

6-20.5.2.5 Eight specimens shall be tested.

6-20.6 Report. The pass/fail result for each helmet shall be reported.

6-20.7 Interpretation. One or more helmet specimens failing this test shall constitute failing performance.

6-21 Impact and Compression Tests.

6-21.1 Application. This test method shall apply to the toe section of protective footwear.

6-21.2 Specimens. A minimum of three footwear items shall be tested for both impact and compression.

6-21.3 Sample Preparation.

6-21.3.1 Samples for conditioning shall be complete footwear toe sections.

6-21.3.2 Specimens shall be conditioned as specified in 6-1.3.

6-21.4 Procedure. Footwear specimens shall be tested in accordance with Section 1.4 of ANSI Z41, *Standard for Personal Protection — Protective Footwear.*

6-21.5 Report.

6-21.5.1 The impact and compression forces for each specimen shall be reported.

6-21.5.2 The clearance after impact and the compression forces shall be recorded.

6-21.6 Interpretation. One or more footwear specimens failing this test shall constitute failing performance.

6-22 Physical Penetration Resistance Test.

6-22.1 Application. This test method shall apply to protective helmets.

6-22.2 Specimens. Specimens shall be selected as specified in 2-3.9.

6-22.3 Sample Preparation.

6-22.3.1 Samples for conditioning shall be complete helmets.

6-22.3.2 Specimens shall be conditioned for each environmental condition specified in 6-1.3, 6-1.4, 6-1.5, 6-1.6, and 6-1.7 prior to each physical penetration.

6-22.4 Apparatus.

6-22.4.1 The ISO size J headform shall conform to the nominal dimensions in Figure 6-19.4.1. Above the test line, it shall have an electrically conductive surface that is electrically connected to the contact indicator.

6-22.4.2 The penetration striker shall have a mass of 1 kg, +0.02/–0.00 kg (2.2 lb, +0.01/–0.00 lb). The point of the striker shall be a cone with an included angle of 60 degrees, +0.5 degree, a height of 38 mm ($1^1/_2$ in.), and a tip radius of 0.5 mm, ±0.1 mm (0.020 in., ±0.004 in.). The hardness of the striking tip shall be Rockwell Scale C-60, minimum. The penetration striker shall be electrically connected to the contact indicator.

6-22.4.3 The contact indicator shall indicate when electrical contact has been made between the penetration striker and the conductive surface of the test headform. The contact indicator shall have a response time of less than 0.5 millisecond.

6-22.4.4 The test shall be conducted at an ambient temperature of 20°C to 28°C (68°F to 82°F), and the relative humidity shall be 30 percent to 70 percent.

6-22.5 Procedure.

6-22.5.1 The environmentally conditioned helmet shall be placed on the rigidly mounted test headform and be secured by the helmet retention system or by other means that will not interfere with the test. The helmet shall be positioned so that the penetration striker shall impact perpendicular to the helmet anywhere above the test line. The impact site shall be at least 76 mm (3 in.) from the center of a previous penetration or impact site.

6-22.5.2 The drop height of the penetration striker shall be adjusted so that the velocity at impact is at 7 m/sec, ±0.1 m/sec (23 ft/sec, ±0.5 ft/sec). A total of two penetration tests for each of the five environmental conditions specified in 6-1.3, 6-1.4, 6-1.5, 6-1.6, and 6-1.7 shall be conducted in such a manner that at least one penetration test shall be performed in each of the test areas defined in Figure 6-1.6.1. The helmet shall be environmentally conditioned prior to each penetration test. A minimum of two penetration test blows shall be applied at different test areas on each helmet.

6-22.6 Report. The pass/fail result for each helmet shall be reported.

6-22.7 Interpretation. One or more helmet specimens failing this test shall constitute failing performance.

6-23 Puncture Resistance, Test One.

6-23.1 Application. This test method shall apply to protective gloves and footwear uppers.

6-23.2 Specimens. A minimum of three specimens measuring at least 150 mm (6 in.) square shall be tested.

6-23.3 Sample Preparation.

6-23.3.1 Samples for conditioning shall be complete gloves or footwear upper sections.

6-23.3.2 Specimens shall be tested after conditioning as specified in 6-1.3.

6-23.4 Procedure. Specimens shall be tested in accordance with ASTM F 1342, *Standard Test Method for Protective Clothing Material Resistance to Puncture.*

6-23.5 Report.

6-23.5.1 The puncture force in kg force (lb force) shall be reported for each specimen.

6-23.5.2 The average puncture force in kg force (lb force) shall be reported for all specimens tested.

6-23.6 Interpretation. The average puncture force shall be used to determine pass/fail performance.

6-23.7 Specific Requirements for Testing Gloves.

6-23.7.1 Specimens shall consist of each composite of the palm, palm side of the fingers, and back of the glove used in the actual glove construction, with the layers arranged in proper

Copyright National Fire Protection Association
Provided by IHS under license with NFPA
No reproduction or networking permitted without license from IHS
Not for Resale

order. Where the specimen composites of the palm, palm side of the fingers, and back of the glove are identical, only one representative composite shall be required to be tested.

6-23.7.2 Glove specimens shall also be tested after wet condition as specified in 6-1.8.

6-23.7.3 Testing shall be performed as specified in 6-23.2 through 6-23.6.

6-23.8 Specific Requirements for Testing Footwear Uppers.

6-23.8.1 Specimens shall consist of each composite of footwear item used in the actual footwear construction, with the layers arranged in proper order. Specimens shall be taken from the thinnest portion of the footwear upper.

6-23.8.2 Testing shall be performed as specified in 6-23.2 through 6-23.6.

6-24 Puncture Resistance, Test Two.

6-24.1 Application. This test method shall apply to protective footwear sole reinforcement devices.

6-24.2 Specimens. A minimum of three footwear sole reinforcement devices shall be tested.

6-24.3 Sample Preparation.

6-24.3.1 Samples for conditioning shall be footwear sole reinforcement devices.

6-24.3.2 Specimens shall be conditioned as specified in 6-1.3.

6-24.4 Procedure. Puncture resistance tests shall be performed in accordance with ANSI Z41, *Standard for Personal Protection — Protective Footwear*.

6-24.5 Report. The force necessary to puncture the sole reinforcement device of each specimen shall be reported.

6-24.6 Interpretation. One or more specimens failing this test shall constitute failing performance.

6-25 Cut Resistance Test.

6-25.1 Application.

6-25.1.1 This test method shall apply to glove and footwear upper materials.

6-25.1.2 Modifications to this test method for evaluation of glove body, gauntlet, and wristlet materials shall be as specified in 6-25.7.

6-25.1.3 Modifications to this test method for evaluation of footwear upper materials shall be as specified in 6-25.8.

6-25.2 Specimens. A minimum of three specimens, consisting of all layers, shall be tested.

6-25.3 Sample Preparation.

6-25.3.1 Samples for conditioning shall be whole gloves or footwear uppers.

6-25.3.2 Specimens shall be conditioned as specified in 6-1.2.

6-25.4 Procedure. Specimens shall be evaluated in accordance with ASTM F 1790, *Standard Test Methods for Measuring Cut Resistance of Materials Used in Protective Clothing*, with the modification that specimens shall be tested to a specific load with the measurement of cut distance.

6-25.5 Report.

6-25.5.1 The cut distance shall be reported to the nearest 1 mm ($^3/_{64}$ in.) for each sample specimen.

6-25.5.2 The average cut distance in mm (in.) shall be reported for all specimens tested.

6-25.6 Interpretation. The average cut distance shall be used to determine pass/fail performance.

6-25.7 Specific Requirements for Testing Glove Body, Gauntlet, and Wristlet Materials.

6-25.7.1 Specimens shall be taken from the back and palm of the glove and shall not include seams.

6-25.7.2 Cut resistance testing shall be performed under a load of 400 g.

6-25.8 Specific Requirements for Testing Footwear Upper Materials.

6-25.8.1 Specimens shall be taken from the parts of the footwear upper that provide uniform thickness and shall not include seams.

6-25.8.2 Cut resistance testing shall be performed under a load of 800 g.

6-26 Abrasion Resistance Test.

6-26.1 Application. This test method shall apply to protective footwear soles and heels.

6-26.2 Specimens. A minimum of three footwear soles with heels shall be tested.

6-26.3 Sample Preparation.

6-26.3.1 Samples for conditioning shall be complete footwear soles with heel.

6-26.3.2 Specimens shall be conditioned as specified in 6-1.3.

6-26.4 Procedure. Abrasion resistance tests shall be performed in accordance with ASTM D 1630, *Standard Test Method for Rubber Property — Abrasion Resistance (Footwear Abrader)*.

6-26.5 Report. The abrasion resistance rating of each specimen shall be reported.

6-26.6 Interpretation. One or more footwear specimens failing this test shall constitute failing performance.

6-27 Cleaning Shrinkage Resistance Test.

6-27.1 Application.

6-27.1.1 This test method shall apply to the proximity protective garment outer shell, moisture barrier, thermal barrier, and winter liner and to the wristlet.

6-27.1.2 Modifications to this test method for testing woven textile materials shall be as specified in 6-27.7.

6-27.1.3 Modifications to this test method for testing knit and stretch woven materials shall be as specified in 6-27.8.

6-27.2 Specimens. Cleaning shrinkage resistance testing shall be conducted on three specimens of each material, and each separable layer of a composite material shall be tested separately.

6-27.3 Sample Preparation. Specimens to be tested shall be conditioned as specified in 6-1.3.

Copyright National Fire Protection Association
Provided by IHS under license with NFPA
No reproduction or networking permitted without license from IHS
Not for Resale

6-27.4 Procedure.

6-27.4.1 Specimens shall be tested using five cycles of Machine Cycle 1, Wash Temperature V, and Drying Procedure Ai of AATCC 135, *Dimensional Changes in Automatic Home Laundering of Woven and Knit Fabrics*.

6-27.4.2 A 1.8-kg, ±0.1 kg (4-lb, ±0.2 lb) load shall be used. A laundry bag shall not be used.

6-27.4.3 Specimen marking and measurements shall be conducted in accordance with the procedure specified in AATCC 135, *Dimensional Changes in Automatic Home Laundering of Woven and Knit Fabrics*.

6-27.4.4 Knit fabric specimens shall be pulled to original dimensions and shall be allowed to relax for 1 minute prior to measurement.

6-27.5 Report.

6-27.5.1 The percent change in the width and length dimensions of each specimen shall be calculated.

6-27.5.2 Results shall be reported as the average of all three specimens in each dimension.

6-27.6 Interpretation.

6-27.6.1 The average percent change in both dimensions shall be used to determine pass/fail performance.

6-27.6.2 Failure of either dimension shall constitute failure for the entire sample.

6-27.7 Specific Requirements for Testing Woven Textile Materials.

6-27.7.1 Each specimen shall be 380 mm × 380 mm, ±13 mm (15 in. × 15 in., ±1/2 in.) and shall be cut from the fabric to be used in the construction of the clothing item.

6-27.7.2 Samples for conditioning shall be at least 1 m (1 yd) square of each material.

6-27.7.3 Testing shall be performed as specified in 6-27.2 through 6-27.6.

6-27.8 Specific Requirements for Testing Knit and Stretch Woven Textile Materials.

6-27.8.1 Other than for wristlets, the dimensions of each specimen shall be 380 mm × 380 mm, ±13 mm (15 in. × 15 in., ±1/2 in.) and shall be cut from the fabric to be used in the construction of the clothing item.

6-27.8.2 The dimensions of wristlet specimens shall be 115 mm × 115 mm, ±13 mm (4 1/2 in. × 4 1/2 in., ±1/2 in.) and shall be cut from the wristlet fabric to be used in the construction of the clothing item.

6-27.8.3 Samples for conditioning shall include material that is at least 50 mm (2 in.) larger in each of the two required specimen dimensions.

6-27.8.4 Testing shall be performed as specified in 6-27.2 through 6-27.6.

6-28 Water Penetration Test.

6-28.1 Application.

6-28.1.1 This test method shall apply to moisture barrier materials and moisture barrier seams.

6-28.1.2 Modifications to this test method for testing moisture barrier materials shall be as specified in 6-28.7.

6-28.1.3 Modifications to this test method for testing moisture barrier seams shall be as specified in 6-28.8.

6-28.2 Specimens.

6-28.2.1 A minimum of five specimens of moisture barrier material shall be tested.

6-28.2.2 Seam specimens shall be cut so that the seam divides the specimen into two equal halves.

6-28.3 Sample Preparation.

6-28.3.1 Specimens shall be tested both before and after being subjected to the procedure specified in 6-1.2.

6-28.3.2 Specimens to be tested shall be conditioned as specified in 6-1.3.

6-28.3.3 Specimens to be tested shall then be conditioned as specified in 6-1.5.

6-28.4 Procedures.

6-28.4.1 Procedure A. Specimens shall be tested at 1.76 kg/cm^2 (25 psi) in accordance with Method 5512, "Water Resistance of Coated Cloth; High Range, Hydrostatic Pressure Method," of Federal Test Method Standard 191A, *Textile Test Methods*.

6-28.4.2 Procedure B. Specimens shall be tested at 0.07 kg/cm^2 (1 psi) for 5 minutes in accordance with Method 5516, "Water Resistance of Cloth; Water Permeability; Hydrostatic Pressure Method," of Federal Test Method Standard 191A, *Textile Test Methods*.

6-28.5 Report. The pass/fail results for each specimen shall be reported.

6-28.6 Interpretation.

6-28.6.1 The appearance of any water shall constitute failure.

6-28.6.2 One or more test failures of any specimen against any liquid shall constitute failure of the material.

6-28.7 Specific Requirements for Testing Moisture Barrier Materials.

6-28.7.1 Samples for conditioning shall be at least 1 m (1 yd) square.

6-28.7.2 Samples for conditioning as specified in 6-1.5 shall be 150-mm (6-in.) squares cut from sample subjected to the procedures specified in 6-1.2.

6-28.7.3 Specimens shall be tested as specified in 6-28.4.1, Procedure A, and 6-28.4.2, Procedure B.

6-28.8 Specific Requirements for Testing Moisture Barrier Seams.

6-28.8.1 Samples for conditioning shall be at least 150 mm × 1 m (6 in. × 39 in.), with the seam bisecting the sample in the longitudinal direction.

6-28.8.2 Samples for conditioning as specified in 6-1.5 shall be 150-mm (6-in.) squares cut from sample subjected to the procedures specified in 6-1.2.

6-28.8.3 Specimens shall be tested as specified in 6-28.4.2, Procedure B.

Copyright National Fire Protection Association
Provided by IHS under license with NFPA
No reproduction or networking permitted without license from IHS
Not for Resale

6-29 Liquid Penetration Resistance Test.

6-29.1 Application.

6-29.1.1 This test shall apply to proximity protective garment materials, protective gloves, and footwear.

6-29.1.2 Modifications to this test method for testing proximity protective garment materials shall be as specified in 6-29.7.1, 6-29.7.2, and 6-29.7.3.

6-29.1.3 Modifications to this test method for testing protective gloves shall be as specified in 6-29.8.

6-29.1.4 Modifications to this test method for testing protective footwear shall be as specified in 6-29.9.

6-29.2 Specimens.

6-29.2.1 A minimum of three specimens shall be tested.

6-29.2.2 Specimens shall consist of three 75-mm (3-in.) squares for each material type.

6-29.3 Sample Preparation.

6-29.3.1 Specimens shall be tested after being subjected to the procedure specified in 6-1.2.

6-29.3.2 Specimens to be tested shall be conditioned as specified in 6-1.3.

6-29.3.3 Specimens to be tested shall then be conditioned as specified in 6-1.5.

6-29.4 Procedure.

6-29.4.1 Liquid penetration resistance testing shall be conducted in accordance with ASTM F 903, *Standard Test Method for Resistance of Protective Clothing Materials to Penetration by Liquids*, using exposure Procedure C.

6-29.4.2 Each of the following liquids shall be tested separately against each sample specimen:

(1) Aqueous film-forming foam (AFFF), 3 percent concentrate
(2) Battery acid (37 percent w/w sulfuric acid)
(3) Fire-resistant hydraulic fluid, phosphate ester base
(4) Surrogate gasoline fuel C as defined in ASTM D 471, *Standard Test Method for Rubber Property — Effect of Liquids*, a 50/50 percent by volume of Toluene and Iso-octane
(5) Swimming pool chlorinating chemical containing at least 65 percent free chlorine (saturated solution)

6-29.4.3 The normal outer surface of the material shall be exposed to the liquid as oriented in the clothing item.

6-29.5 Report. The pass/fail result for each specimen shall be reported.

6-29.6 Interpretation. One or more test failures of any specimen against any liquid shall constitute failure of the material.

6-29.7 Specific Requirements for Testing Moisture Barrier Materials.

6-29.7.1 Samples for conditioning shall be at least 1 m (1 yd) square.

6-29.7.2 Specimens shall consist of a composite of layers that act as a barrier and seam areas. All layers shall be arranged in proper order.

6-29.7.3 Testing shall be performed as specified in 6-29.2 through 6-29.6.

6-29.8 Specific Requirements for Testing Glove Materials.

6-29.8.1 Three specimens each shall be taken from the sample gloves at the palm, back, and seam areas.

6-29.8.2 Samples for conditioning shall be whole gloves.

6-29.8.3 Testing shall be performed as specified in 6-29.2 through 6-29.6.

6-29.9 Specific Requirements for Testing Footwear Materials.

6-29.9.1 Samples for conditioning shall be whole footwear.

6-29.9.2 Three specimens each shall be taken from the upper and any upper seam areas.

6-29.9.3 Testing shall be performed as described in 6-29.2 through 6-29.6.

6-30 Viral Penetration Resistance Test.

6-30.1 Application.

6-30.1.1 This test shall apply to proximity protective garment moisture barriers and to moisture barrier seams, protective gloves, and protective footwear.

6-30.1.2 Modifications to this test method for testing moisture barriers shall be as specified in 6-30.7.

6-30.1.3 Modifications to this test method for testing moisture barrier seams shall be as specified in 6-30.8.

6-30.1.4 Modifications to this test method for testing gloves shall be as specified in 6-30.9.

6-30.1.5 Modifications to this test method for testing footwear shall be as specified in 6-30.10.

6-30.2 Specimens.

6-30.2.1 A minimum of three specimens shall be tested.

6-30.2.2 Specimens shall consist of three 75-mm (3-in.) squares for each material type.

6-30.3 Sample Preparation.

6-30.3.1 Specimens other than footwear shall be tested after being subjected to the procedure specified in 6-1.2.

6-30.3.2 All specimens to be tested shall be conditioned as specified in 6-1.3.

6-30.3.3 All specimens to be tested shall then be conditioned as specified in 6-1.5.

6-30.4 Procedure. Liquid penetration resistance testing shall be conducted in accordance with ASTM F 1671, *Standard Test Method for Resistance of Materials Used in Protective Clothing to Penetration by Blood-Borne Pathogens Using Phi-X-174 Bacteriophage as a Test System.*

6-30.5 Report. The pass/fail result for each specimen shall be reported.

6-30.6 Interpretation. A failure of any specimen against any chemical constitutes failure of the material.

6-30.7 Specific Requirements for Testing Moisture Barrier Materials.

6-30.7.1 Specimens shall consist of the moisture barrier or that material intended to act as the moisture barrier.

Copyright National Fire Protection Association
Provided by IHS under license with NFPA
No reproduction or networking permitted without license from IHS
Not for Resale

6-30.7.2 Samples for conditioning shall be at least 1 m (1 yd) square.

6-30.7.3 Samples for conditioning as specified in 6-1.5 shall be 150-mm (6-in.) squares cut from samples subjected to the procedures in 6-1.2.

6-30.7.4 Testing shall be as described in 6-30.2 through 6-30.6.

6-30.8 Specific Requirements for Testing Moisture Barrier Seams.

6-30.8.1 Samples for conditioning shall be at least 150 mm × 1 m (6 in. × 39 in.) with the seam bisecting the sample in a longitudinal direction.

6-30.8.2 Samples for conditioning as specified in 6-1.5 shall be 150 mm (6 in.) squares cut from samples subjected to the procedures in 6-1.2.

6-30.8.3 Testing shall be as described in 6-30.2 through 6-30.6.

6-30.9 Specific Requirements for Testing Glove Materials.

6-30.9.1 Three specimens each shall be taken from sample gloves at the palm, back, and seam areas.

6-30.9.2 Samples for conditioning shall be whole gloves.

6-30.9.3 Testing shall be as described in 6-30.2 through 6-30.6.

6-30.10 Specific Requirements for Testing Footwear Materials.

6-30.10.1 Three specimens each shall be taken from the upper and any upper seam areas.

6-30.10.2 Samples for conditioning shall be whole footwear.

6-30.10.3 Testing shall be as described in 6-30.2 through 6-30.6.

6-31 Wet Flex.

6-31.1 Specimens shall be tested after being subjected to the procedure specified in 6-1.3.

6-31.2 Test specimens shall be 100 mm × 200 mm (4 in. × 8 in.) with the long dimension parallel to the warp or wale direction and shall be from the fabric lot used in the construction of the proximity protective garment. Five (5) specimens from each sample unit shall be tested with no two specimens containing the same yarns.

6-31.3 The test specimen shall be immersed in water at 60°C, ±3°C (140°F, ±5°F) for 15 minutes. Upon removal from the water, the test specimen shall be placed on two layers of absorbent-type blotters and covered by two additional layers. After placing the wet specimens between the blotters, a 4.5-kg (10 lb) weight, a steel rod 76 mm (3 in.) in diameter and 127 mm (5 in.) long, shall be rolled over the test specimen for four complete cycles, eight passes. The specimen shall be removed from between the blotters and placed in the flexing device as shown in Figure 6-31.3(a) and (b). The blotting paper shall conform to requirements detailed in Method 5500, Water Resistance of Cloth; Dynamic Absorption Method, of Federal Test Method Standard 191A, *Textile Test Methods*.

6-31.4 The flexing device as shown in Figures 6-31.3(a) and (b) shall be used. This device shall have a suitable weight on the weight arm to produce a 13.5-N to 15.75-N (3-lb to 3.5-lb) tension on the specimen during flexing. The tensioning jaw or clamp shall be so located that, with tension jaw arm vertical, any point on the tensioning jaw would be the apex of a cone of motion generated between that point and the corresponding point of the moving jaw. The crank arms shall be equal in effective length and in angular phase so that the moving jaw connecting the two arms remains parallel to the tension jaw throughout a complete revolution of the arms. The specimen shall be placed in the device with the moving jaw at bottom dead center, the tension jaw arm vertical, and the face of the cloth down. Each jaw shall clamp the specimen across the entire width. The crank handle shall be turned at a rate of 50 revolutions, ±10 revolutions, per minute of the crank arms and moving jaw during the test. A tray or board, flat black in color and sufficiently large to catch any particles that are removed from the fabric, shall be cleaned before each test and examined for materials particles after each test. A motor-driven apparatus shall be permitted to be used in lieu of the manual device specified.

FIGURE 6-31.3(a) Flexing device — end view.

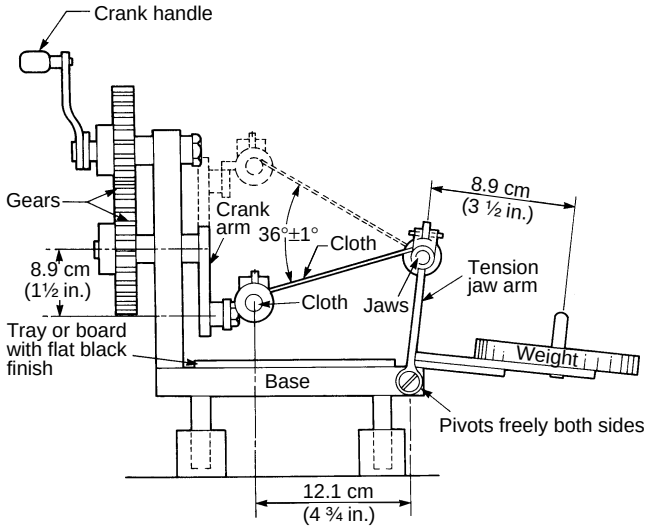

FIGURE 6-31.3(b) Flexing device — top view.

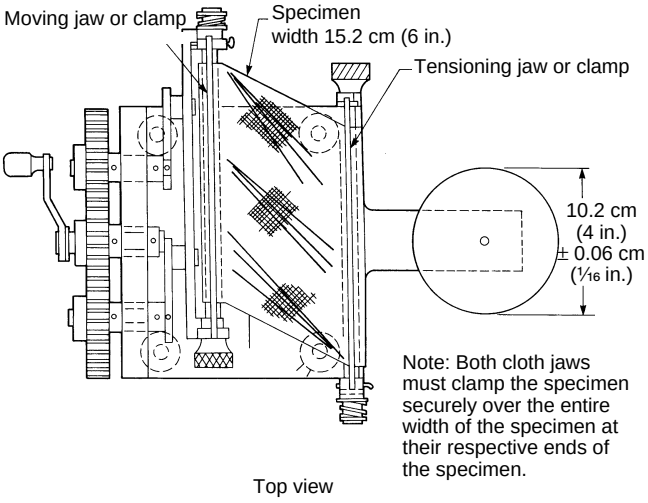

6-31.5 The specimens shall be taken directly from the blotter paper and placed in the flexing device with the warp or wale direction perpendicular to the jaw line. The distance between

Copyright National Fire Protection Association
Provided by IHS under license with NFPA
No reproduction or networking permitted without license from IHS
Not for Resale

jaw lines shall be 135 mm ($5^1/_4$ in.). The specimen shall be flexed for 1000 cycles, then removed from the apparatus, and shall be visually inspected to determine pass/fail.

6-31.6 Any cracking or delamination closer than 22 mm ($^7/_8$ in.) from either jaw line shall not be considered. Failure of any one specimen shall constitute failure of sample unit of product.

6-32 Adhesion After Wet Flex-Tape Method.

6-32.1 Immediately after each of the five specimens has completed the wet flex test in Section 6-31, the specimens shall be tested and evaluated for adhesion. This test shall be performed only on coated or laminated materials.

6-32.2 A razor cut design shall be symmetrically centered within the 100-mm × 200-mm (4-in. × 8-in.) specimen. Two *X* cuts and three horizontal cuts shall be made as shown in Figure 6-32.2 with a sharp razor blade through the coating or laminate and adhesive layers, but not through the base cloth.

FIGURE 6-32.2 Cuts.

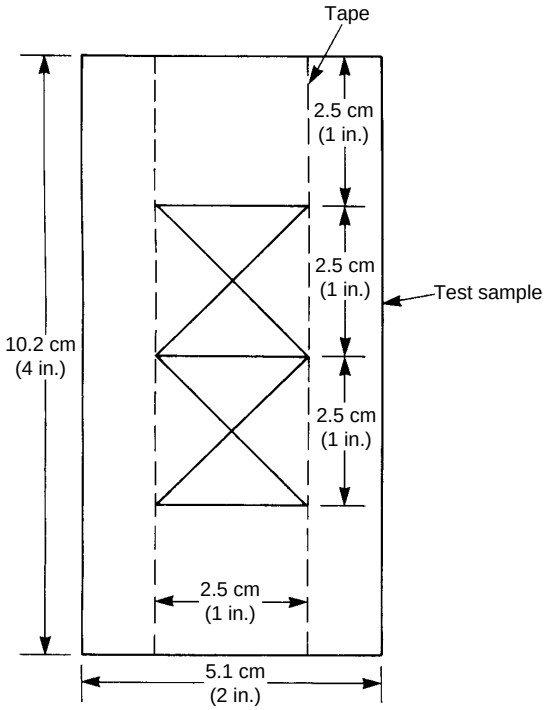

Note: Solid lines indicate cut lines.

6-32.3 The pressure sensitive tape used for testing the adhesion of the coating or the laminate shall have an adhesion value of not less than 1.150 N/cm ($2^3/_4$ lb/in.) width or more than 0.191 N/cm ($3^1/_2$ lb/in.) width. Five 25-mm × 200-mm (1-in. × 8-in.) specimens of the tape shall be tested rising using the following:

(1) A tensile testing machine as described in Method 5100, Strength and Elongation, Breaking of Woven Cloth; Grab Method, of Federal Test Method Standard 191A, *Textile Test Methods,* with the modification that all machine attachments for determining maximum load shall be disengaged and the speed of the pulling clamp shall be 510 mm/min (20 in./min)

(2) Five 50-mm × 100-mm (2-in. × 4-in.) steel plates conforming to Class 301 of Federal Specification QQ-S-766, *Steel Plate, Sheet, and Strip-Corrosion Resisting,* which have been polished to a No. 4 finish

(3) A 38-mm ($1^1/_2$-in.) wide steel roller weighing 4.53 kg, ±0.06 kg (10 lb, ±2 oz)

6-32.3.1 Before each test, the steel plates shall be thoroughly cleaned with diacetone alcohol, methyl alcohol, or methyl ethyl ketone, using a clean piece of lintless wiping tissue. The tape shall be applied to the clean surface of the plate so that it covers the entire length of the plate and extends 100 mm (4 in.) beyond one end of the plate.

6-32.3.2 The tape shall be pressed down by passing the roller over it six times, three times in each direction. The free end of the tape shall be doubled back and 25 mm (1 in.) of the tape peeled off the plate. The plate shall be inserted and clamped in the bottom jaw of the tensile testing machine with the free end of the tape downward. The free end of the tape shall be looped upward and inserted and clamped in the upper jaw so as to peel the tape from the plate when the jaw motion is started. The minimum tension required to remove the remainder of the tape, except for the final 25 mm (1 in.), shall be the adhesion value and shall be determined by means of the autographic recording device.

6-32.4 Five 25-mm × 200-mm (1-in. × 8-in.) specimens of similar tape, taken from a lot of material that has passed the test as specified in Section 6-15, shall be used for testing the adhesion of the coating or laminate.

6-32.5 The apparatus and procedure shall be as specified in 6-32.3, but instead of the steel plates specified in 6-32.3(2), the test specimens used in Section 6-15 shall be used for this test.

6-32.6 A moderate amount of specks on the tape of coating shall not constitute failure; however, exposure of adhesive beneath a laminate shall constitute failure. The failure of one specimen shall constitute failure of the unit of product.

6-33 Flex at Low Temperature.

6-33.1 The test samples shall be five specimens, 25 mm × 100 mm (1 in. × 4 in.), with the long dimension in the warp or wale direction, and shall be from the fabric lot used in the construction of the garment.

6-33.2 Specimens shall be tested after being subjected to the procedure specified in 6-1.3.

6-33.3 The test samples and jig as shown in Figure 6-33.3 shall be conditioned for 4 hours at a temperature of –32°C (–25°F).

6-33.4 At the end of the conditioning period, with the jig and the test specimens still in the test atmosphere, the sample shall be placed in the open jig with the rod in the center of the fabric. The face of the fabric shall be positioned away from the rod. The jig shall be closed in less than 3 seconds so that the specimen is bent face out around the rod until the back of the specimen touches itself. The tested fabric shall be examined without magnification.

Copyright National Fire Protection Association
Provided by IHS under license with NFPA
No reproduction or networking permitted without license from IHS
Not for Resale

FIGURE 6-33.3 Jig assembly — resistance to low temperature test.

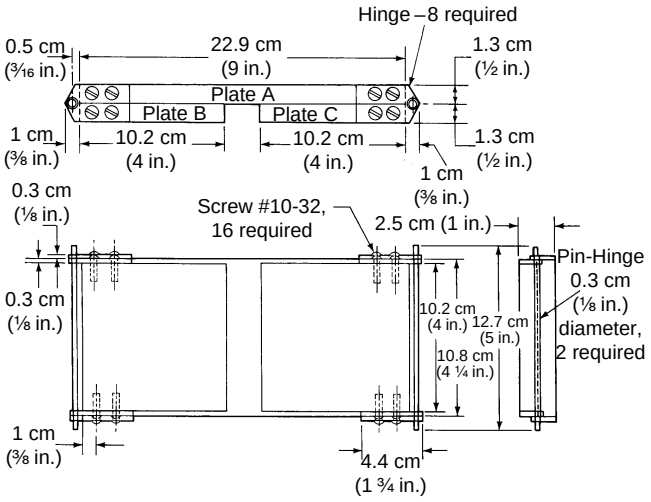

Material: Plates and hinges–aluminum alloy.
Hinge pins–steel rod.
Smooth machine finish all over.

6-33.5 Failure of any one specimen shall constitute failure of sample unit of production.

6-34 Resistance to High-Temperature Blocking.

6-34.1 Specimens shall be tested after being subjected to the procedure specified in 6-1.3.

6-34.2 Blocking test procedure shall be as stated in Method 5872, Temperature, High, Effect on Cloth Blocking, of Federal Test Method Standard 191A, *Textile Test Methods.*

6-34.3 The test specimen shall be examined to determine pass/fall. Failure to any one specimen shall constitute failure of the unit of product.

6-35 Corrosion Resistance Test.

6-35.1 Application.

6-35.1.1 This test method shall apply to hardware items on proximity protective garments, helmets, gloves, footwear, and helmet faceshields.

6-35.1.2 Modifications to this test method for testing garment and glove hardware shall be as specified in 6-35.7.

6-35.1.3 Modifications to this test method for testing helmet and faceshield shall be as specified in 6-35.8.

6-35.1.4 Modifications to this test method for testing footwear shall be as specified in 6-35.9.

6-35.2 Specimens. A total of three specimens of each hardware type shall be tested.

6-35.3 Sample Preparation. Specimens shall not be conditioned.

6-35.4 Procedure.

6-35.4.1 Specimens shall be tested in accordance with ASTM B 117, *Standard Method of Salt Spray (Fog) Testing.* Hardware items shall be exposed to a 5 percent, ±1 percent saline solution for a period of 20 hours.

6-35.4.2 Immediately following the storage specified in 6-35.4.1 and prior to examination, specimens shall be rinsed under warm, running tap water and dried with compressed air.

6-35.4.3 Specimens shall then be examined visually with the unaided eye to determine the presence of corrosion.

6-35.4.4 The functionality of each specimen shall be evaluated.

6-35.5 Report. The presence of corrosion and the functionality for each specimen shall be reported.

6-35.6 Interpretation. One or more hardware specimens failing this test shall constitute failing performance for the hardware type.

6-35.7 Specific Requirements for Testing Garment and Glove Hardware.

6-35.7.1 Samples for conditioning shall be whole hardware items.

6-35.7.2 A total of three specimens of each hardware type shall be tested.

6-35.8 Specific Requirements for Testing Helmets and Faceshields.

6-35.8.1 Samples for conditioning shall be whole helmets and faceshields.

6-35.8.2 A total of three different helmets or faceshields shall be tested.

6-35.9 Specific Requirements for Testing Footwear.

6-35.9.1 Samples for conditioning shall be whole hardware items.

6-35.9.2 A total of three specimens of each hardware type shall be tested.

6-35.9.3 Functionality of the hardware shall not be evaluated.

6-36 Electrical Insulation Test One.

6-36.1 Application. This test method shall apply to protective helmets.

6-36.2 Specimens. Specimens shall be selected as specified in 2-3.9.

6-36.3 Sample Preparation.

6-36.3.1 Specimens shall be conditioned as specified in 6-1.3.

6-36.3.2 Samples for conditioning shall be complete helmets without helmet outer covers where provided, shrouds, or ear covers.

6-36.4 Apparatus.

6-36.4.1 The following equipment shall be provided for Procedure A:

(1) A source of 60-Hz alternating current variable from 0 to 2200 volts true rms
(2) Wiring and terminals for application of voltage to the water in the vessel
(3) A voltmeter to measure the applied voltage to within 2 percent
(4) A millimeter to measure the leakage current to within 2 percent
(5) A vessel, containing tap water, of sufficient size to submerge an inverted helmet to the dielectric test plane
(6) A frame for suspending the test specimen in water

Copyright National Fire Protection Association
Provided by IHS under license with NFPA
No reproduction or networking permitted without license from IHS
Not for Resale

6-36.4.2 The following equipment shall be provided for Procedure B:

(1) A source of 60-Hz alternating current variable from 0 to 2200 volts true rms
(2) Wiring and terminals for application of voltage across the crown of the test specimen
(3) A voltmeter to measure the applied voltage within 2 percent
(4) A millimeter to measure the leakage current to within 2 percent
(5) A vessel, containing tap water, of sufficient size to completely submerge an inverted helmet
(6) An aluminum ISEA size 7 headform modified in accordance with Table 6-18.4.1 and Figures 6-18.4.1(a) through (c)

6-36.5 Procedures.

6-36.5.1 Procedure A.

6-36.5.1.1 Where helmets have a vertical adjustment to the suspension system, the vertical adjustment shall be set to raise the helmet to the highest position, with maximum crown clearance between the headform and the inside of the helmet crown, prior to establishing the helmet positioning index. The helmet shall be placed on the ISO size J headform specified in Figure 6-19.4.1 and positioned according to the helmet positioning index for this test. After proper positioning in accordance with the helmet positioning index, the dielectric test plane specified in Figure 6-36.5.1.2 shall be determined.

6-36.5.1.2 The helmet shall be inverted and positioned in accordance with the inverted helmet positioning index while maintaining all vertical adjustments set at their highest position. The inverted helmet shall be filled with tap water equal to the dielectric test plane as shown in Figure 6-36.5.1.2. The helmet shall then be submerged in tap water to the same level as the water on the inside of the helmet.

FIGURE 6-36.5.1.2 Test setup.

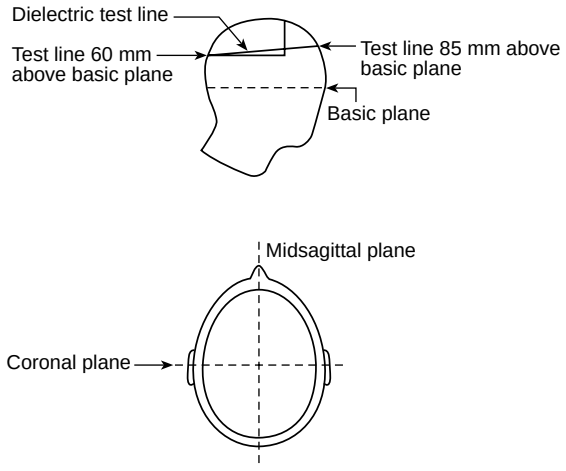

6-36.5.1.3 A 60-Hz alternating current voltage shall be applied to the water in the vessel and increased to 2200 volts. The voltage shall be maintained at 2200 volts, ±2 percent for 1 minute.

6-36.5.2 Procedure B.

6-36.5.2.1 The sample helmet and retention system shall be completely submerged in tap water for a period of 15 minutes, +2/−0 minutes. The helmet shall be removed from the tap water and allowed to drain for not longer than 2 minutes.

6-36.5.2.2 The sample helmet shall then be mounted on the modified ISEA aluminum size 7 headform, with the chinstrap firmly secured to the headform by means of the conductive terminal junction bolt.

6-36.5.2.3 A lead carrying 60-Hz alternating current voltage shall be attached to all metal parts on the helmet's exterior, at or above the brim edge. A second pickup lead shall be attached to the terminal junction bolt. Voltage shall be applied to the external helmet shell lead and increased to 2200 volts, ±2 percent volts. The voltage shall be maintained for 15 seconds.

6-36.6 Report. Any current leakage or evidence of breakdown shall be recorded for each helmet.

6-36.7 Interpretation. One or more helmet specimens failing this test shall constitute failing performance.

6-37 Electrical Insulation Test Two.

6-37.1 Application. This test shall apply to protective footwear.

6-37.2 Specimens. A minimum of three footwear items shall be tested.

6-37.3 Sample Preparation.

6-37.3.1 Samples for conditioning shall be whole footwear.

6-37.3.2 Specimens shall be conditioned as specified in 6-1.3.

6-37.4 Procedure.

6-37.4.1 Sample footwear shall be tested to 14,000 volts (rms) in accordance with Section 5.1.1 of ASTM F 1116, *Standard Test Method for Determining Dielectric Strength of Overshoe Footwear.*

6-37.4.2 The electrode inside the boot shall be conductive metal shot.

6-37.5 Report. Any current leakage or evidence of breakdown shall be recorded for each footwear item.

6-37.6 Interpretation. One or more footwear specimens failing this test shall constitute failing performance.

6-38 Overall Liquid Integrity Test One.

6-38.1 Application. This test shall apply to protective gloves.

6-38.2 Specimens. A minimum of three glove pairs each for size small and large shall be used for testing.

6-38.3 Sample Preparation.

6-38.3.1 Samples for conditioning shall be whole gloves.

6-38.3.2 Specimens shall be tested after being subjected to the procedure specified in 6-1.2.

6-38.3.3 Specimens shall be tested after being subjected to the procedure specified in 6-1.5.

6-38.3.4 Specimens to be tested shall be conditioned as specified in 6-1.3.

6-38.4 Apparatus.

6-38.4.1* A water-markable glove shall cover all areas of the tester's hand. The water markable glove shall be constructed of a fabric that is marked easily by water to determine leakage.

6-38.4.2 Water used for integrity testing shall be treated with a nonfoaming surfactant to lower its surface tension to less than 34 dynes/cm, ±5 dynes/cm.

Copyright National Fire Protection Association
Provided by IHS under license with NFPA
No reproduction or networking permitted without license from IHS
Not for Resale

6-38.5 Procedure.

6-38.5.1 Test subjects shall be selected so that their hand dimensions are as close as possible to the middle of the range for hand length and hand circumference, as specified in the tables provided for size small and size large gloves in 4-3.7.3.

6-38.5.2 The test subject shall don the glove specimen over the water-markable glove.

6-38.5.3 The test subject shall immerse the glove specimen to within 25 mm (1 in.) of the top of the body of the glove specimen for 5 minutes in 20°C, ±3°C (68°F, ±5°F) water treated with a surfactant to lower its surface tension to 34 dynes/cm, ±5 dynes/cm. The test subject shall flex the glove specimen in a fist-clenching motion every 10 seconds.

6-38.5.4 The glove specimen shall be removed from the test subject's hand and the inner glove shall be inspected for water marks.

6-38.6 Report. The appearance of any water mark on the inner glove after testing any of the three gloves shall be reported.

6-38.7 Interpretation. The appearance of any water mark on the inner glove after testing any glove shall be considered leakage and shall constitute failing performance.

6-39 Overall Liquid Integrity Test Two.

6-39.1 Application. This test shall apply to protective footwear.

6-39.2 Specimens. A minimum of three footwear items shall be tested.

6-39.3 Sample Preparation.

6-39.3.1 Samples for conditioning shall be whole footwear.

6-39.3.2 Specimens shall be conditioned as specified in 6-1.3.

6-39.4 Procedure.

6-39.4.1 Protective footwear shall be tested in accordance with Appendix B of Footwear Industries of America Standard 1209, *Whole Shoe Flex*. The level of the water shall be no less than 25 mm (1 in.) from the lowest point of the throat.

6-39.4.2 The test shall consist of 100,000 flexes.

6-39.4.3 After flexing, the footwear specimen shall be placed in a container that allows its immersion in tap water, and shall be treated with a dye and surfactant that achieves a surface tension of 34 dynes/cm, ±5 dynes/cm, to a height not less than 25 mm (1 in.) from the lowest point of the throat. The paper toweling required in FIA 1209, *Whole Shoe Flex*, shall be placed inside the footwear specimen such that the paper toweling intimately contacts all areas inside the footwear specimen to a height not less than 25 mm (1 in.) from the lowest point of the throat.

6-40 Retention System Test.

6-40.1 Application. This test shall apply to protective helmets.

6-40.2 Specimens. Specimens shall be selected as specified in 2-3.9.

6-40.3 Sample Preparation.

6-40.3.1 Samples for conditioning shall be whole helmets.

6-40.3.2 Specimens shall be conditioned as specified in 6-1.3.

6-40.4 Apparatus.

6-40.4.1 An ISO size J headform conforming to the manual dimensions in Figure 6-19.4.1 shall be used.

6-40.4.2 The mechanical chin structure shall consist of two rollers 13 mm ($^1/_2$ in.) in diameter with centers that are 75 mm (3 in.) apart. The mechanical chin structure shall conform with Figure 6-40.4.2.

FIGURE 6-40.4.2 Retention system test setup.

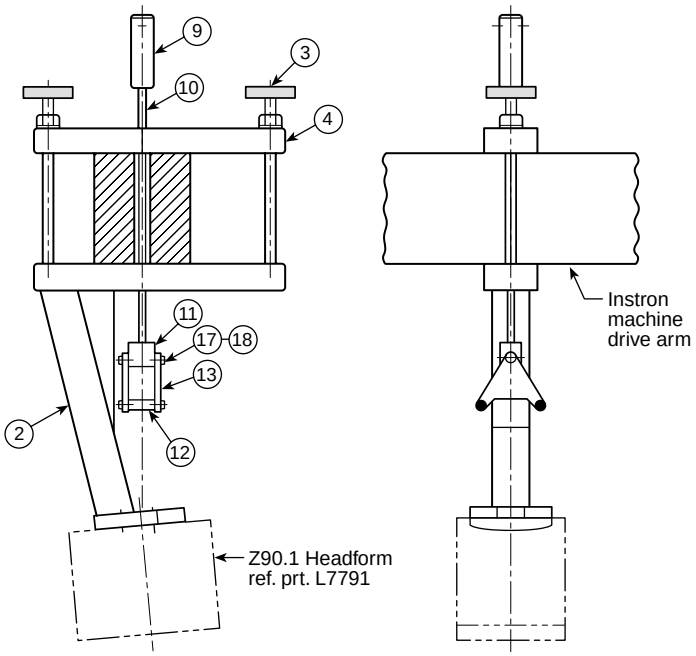

ITEM NO.	PART NO.	SHT. NO.	DESCRIPTION	MAT'L	VEND. OR STR. SIZE	QTY
1	L8539	1	Retention Test Fixt. Assy.	—	—	1
2		2	Main Support Assy.	—	—	1
3		2	Knurled Knob Assy.	—	—	2
4		2	Rect. Alum. Bar	6061-T6	1 1/2 x 3 x 14 Lg.	1
5		2	Rect. Alum. Bar	6061-T6	1 1/2 x 3 x 14 Lg.	1
6		2	Alum. Bar	6061-T6	2 x 2 x 7 1/2 Lg.	1
7		2	Alum. Bar	6061-T6	2 x 2 x 12.96 Lg.	1
8		2	Alum. Flat	6061-T6	3/4 x 4 1/2 x 5 Lg.	1
9		2	C.F. Steel Rod	Stl.	1 1/4 Dia. x 4 Lg.	1
10		2	C.F. Steel Rod	Stl.	3/8 Dia. x 22 Lg.	1
11		2	C.F. Steel Flat	Stl.	1 x 1 1/4 x 1 1/2 Lg.	1
12		2	Hollow Steel Tube	Stl.	.500 O.D. .384 I.D. x 1 1/2	2
13		2	C.F. Steel Flat	Stl.	1/4 x 3 1/4 x 3 3/4 Lg.	2
14		2	C.F. Steel Flat	Stl.	39 x 3/4 Thk.	2
15		2	C.F. Steel Rod	Stl.	3/4 Ø x 10 1/2 Lg.	2
16		2	Hex Nut	Stl.	3/4 - 10 Unc.	2
17		1	Hex Hd. Bolt	Stl.	3/8 - 24 Unf. x 2 1/2 Lg.	3
18		1	Hex Nut	Stl.	3/8 - 24 Unf.	3

Notes:

1. Remove burrs and break sharp edges.
2. All steel parts are to be solvent cleaned and zinc plated 0.0003 to 0.0010 in. thick.
3. Headform is to be bolted in place using 3 socket head cap screws 1/2–13 UNC × 1 1/2 Lg.

Copyright National Fire Protection Association
Provided by IHS under license with NFPA
No reproduction or networking permitted without license from IHS
Not for Resale

6-40.4.3 The mechanical chin structure shall be designed to be used with a calibrated tensile test machine. The calibrated tensile test machine shall be capable of measuring the force applied to the retention system within 2 percent at the specified force.

6-40.4.4 The test shall be conducted at an ambient temperature of 20°C to 28°C (68°F to 82°F), and the relative humidity shall be 30 percent to 70 percent.

6-40.4.5 Prior to testing, the test machine shall be allowed to warm up until stability is achieved.

6-40.5 Procedure.

6-40.5.1 The headform and mechanical chin structure shall be positioned so that the distance between the bottom of the rollers and the top of the headform is 210 mm, ±25 mm ($8^5/_{16}$ in., $\pm^{25}/_{64}$ in.). The chin strap shall be passed around the rollers, and the helmet shall be secured to the headform. The chin strap shall be adjusted and preloaded to 45 N, ±5 N (10 lbf, ±1 lbf). The distance between the top of the helmet and the rollers shall be measured and recorded to the nearest 0.5 mm (0.02 in.).

6-40.5.2 The force applied to the retention system shall be slowly increased to 445 N, ±5 N (100 lbf, ±1 lbf). The force shall be increased smoothly from 45 N to 445 N (10 lbf to 100 lbf) at between 9 N/sec to 45 N/sec (2 lbf/sec to 10 lbf/sec).

6-40.5.3 Where using a tensile testing machine, the load rate shall be 25 mm/min (1 in./min) to a limit of 445 N (100 lbf).

6-40.5.4 The distance between the top of the helmet and the rollers shall be measured and recorded again after the force has been maintained at 445 N (100 lbf) for 60 seconds, +15/−0 seconds. The difference between the second measurement and the first shall be the retention system elongation.

6-40.6 Report. The retention system elongation shall be measured for each helmet specimen.

6-40.7 Interpretation. One or more helmet specimens failing this test shall constitute failing performance.

6-41 Suspension System Retention Test.

6-41.1 Application. This test shall apply to protective helmets.

6-41.2 Specimens. Specimens shall be selected as specified in 2-3.9.

6-41.3 Sample Preparation.

6-41.3.1 Specimens shall be conditioned as specified in 6-1.3.

6-41.3.2 Samples for conditioning shall be whole helmets.

6-41.4 Apparatus. The suspension system retention test fixtures shall consist of rigid material of sufficient thickness and optional design to facilitate firm attachment to the helmet suspension and the tensile test machine as shown in Figure 6-41.4.

FIGURE 6-41.4 Suspension system test setup.

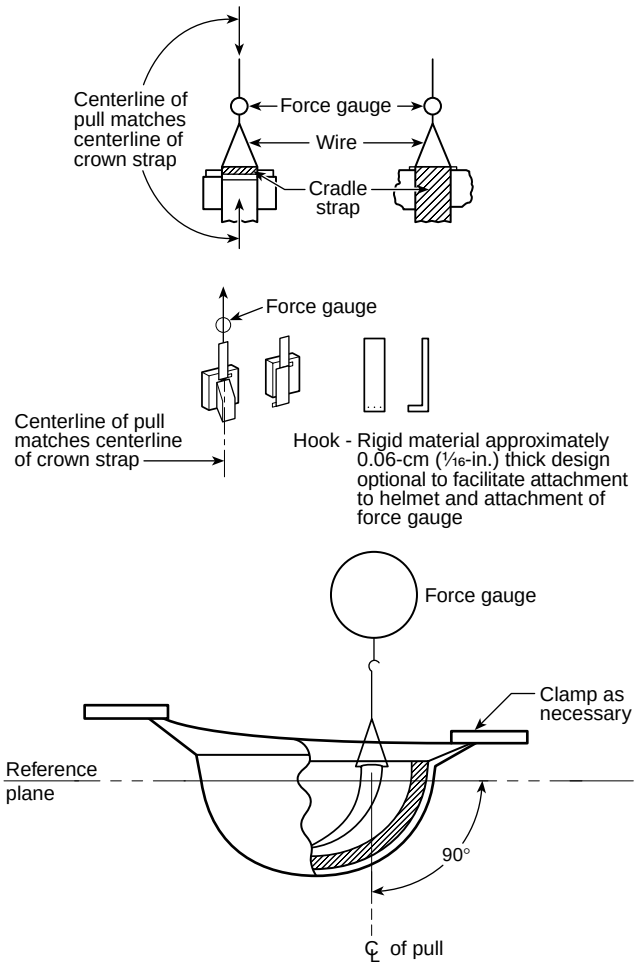

6-41.5 Procedure.

6-41.5.1 Specimens shall be positioned and secured so that the helmet's reference plane is horizontal.

6-41.5.2 Each attachment point of the crown strap shall be tested by applying a pull force perpendicular to the reference plane to a maximum load of 45 N, ±5 N (10 lbf, ±1 lbf).

6-41.5.3 The force shall be increased from 0 N to 45 N, ±5 N (0 lbf to 10 lbf, ±1 lbf) at a cross head speed of 25 mm/min., ±5 mm/min (1 in./min., $\pm^3/_{16}$ in./min).

6-41.5.4 The force shall be applied through the centerline at each attachment point.

6-41.6 Report. The individual pass/fail results for each attachment point shall be recorded.

6-41.7 Interpretation. One or more helmet specimens failing this test shall constitute failing performance.

6-42 Liner Retention Test.

6-42.1 Application. This test shall apply to protective gloves.

6-42.2 Specimens. A minimum of three glove pairs each for size small and size large shall be used for testing.

Copyright National Fire Protection Association
Provided by IHS under license with NFPA
No reproduction or networking permitted without license from IHS
Not for Resale

6-42.3 Sample Preparation.

6-42.3.1 Samples for conditioning shall be whole gloves.

6-42.3.2 Specimens to be tested shall be conditioned as specified in 6-1.2.

6-42.4 Procedure.

6-42.4.1 Test subjects shall be selected so that their hand dimensions are as close as possible to the middle of the range for hand length and hand circumference, as specified in the tables provided for size small and size large gloves in 4-3.7.3.

6-42.4.2 The time to don one glove of the glove pair specimen shall be determined by measuring the time it takes for the test subject to don the single glove on three consecutive trials without altering the sample glove linings between donnings.

6-42.4.3 Each donning trial shall start with the glove lying in front of the test subject and shall end when the test subject's fingers are seated in the sample glove.

6-42.4.4 The baseline donning time shall be the average of the first three donning times as determined in 6-42.4.2. The baseline donning time shall not exceed 10 seconds. The doffing time between donnings shall not exceed 10 seconds.

6-42.4.5 Glove pair specimens shall then be conditioned as specified in 6-1.8.

6-42.4.6 The final donning time shall be the average of the times for the first three donnings after conditioning as specified in 6-42.4.5.

6-42.5 Report.

6-42.5.1 The final donning time and the baseline donning time shall be reported to the nearest 0.1 second for each trial.

6-42.5.2 The average final and baseline donning times shall be calculated and reported.

6-42.6 Interpretation. Pass/fail determinations shall be made using the average final and baseline donning times.

6-43 Glove Hand Function Tests.

6-43.1 Application. This test shall apply to gloves.

6-43.2 Sample Preparation.

6-43.2.1 Samples for conditioning shall be whole glove pairs.

6-43.2.2 Glove pair samples shall be preconditioned as specified in 6-1.3.

6-43.3 Specimens.

6-43.3.1 A minimum of three glove pairs each for size small and size large shall be used for testing.

6-43.3.2 Each glove pair shall be tested as a complete set of gloves in new, as distributed, condition.

6-43.3.3 Glove pair specimens shall not receive special softening treatments prior to tests.

6-43.4 Procedures.

6-43.4.1 A minimum of three pairs each of size small and size large shall be evaluated.

6-43.4.2 Test subjects shall be selected such that their hand dimensions fall within the range for hand and digit length and circumference as specified in Table 4-3.7.3(b) or Table 4-3.7.3(d). For digit length and circumference, a maximum of three measurements shall be permitted to fall outside of the range specified, provided that no measurement exceeds the specified range by more than 25 percent. Three test subjects shall be selected for testing size large gloves and three test subjects shall be selected for testing size small gloves.

6-43.4.3 Each test subject used to perform this testing shall practice the hand functions a minimum of three times before conducting actual testing.

6-43.4.4 Gross Dexterity Procedure.

6-43.4.4.1 A peg-board apparatus that consists of 25 stainless-steel pins within a medium diamond knurled 30 degrees, 25 teeth per 25 mm (1 in.) surface; and a peg-board shall be used. Each stainless-steel pin shall have a diameter of 9.5 mm ($^3/_8$ in.) and a length of 38 mm ($1^1/_2$ in.). The peg-board shall have 25 holes, each having a diameter of 10 mm ($^{25}/_{64}$ in.) and a depth of 13 mm ($^1/_2$ in.). The holes shall be in a 5 by 5 pattern and each hole shall have a separation of 25 mm (1 in.) from other holes.

6-43.4.4.2* Before each test, the pegs and peg board shall be placed on the test surface, which shall be a nominally 600 mm × 900 mm (24 in. × 36 in.) sheet of 1.6-mm (0.0625-in.) Neoprene® having a hardness of 50 ±5 Shore A and a thickness of 1.57 mm (0.062 in.) ±10 percent. The pegs shall be randomly scattered in the working area most comfortable to the test subject (i.e. right side for right handed subjects, left side for left-handed test subjects, directly in front, and so on).

6-43.4.4.3 In starting the test, each peg shall be grasped near its end and shall be placed in the peg-board beginning at the upper left corner and proceeding from left to right and top to bottom.The pegs shall not be picked up from any surface other than the specified test surface, and shall not be picked up by sliding, standing, or otherwise supporting the peg with another object, such as the peg board, another peg, or the test subject's free hand. Only one hand shall be used during the test, and only one peg shall be grasped at a time. The test subject shall not alternate hands during the test series. The peg board shall be permitted to be prevented from moving during the test by the test subject's free hand or other means as necessary.

6-43.4.4.4 The time to place all pegs in the peg board shall be measured for each test subject and shall be known as the dexterity test time.

6-43.4.4.5 Each test subject shall perform the test without gloves following the steps in 6-43.4.4.2 through 6-43.4.4.4 until the variance of the dexterity test times of that person's last three repetitions does not exceed 8 percent. Variance shall be calculated by dividing the standard deviation by the average of the three repetitions and multiplying by 100. The average of the three repetitions shall be used as the baseline dexterity test time *(DTT_b)* and shall be between 25 and 45 seconds. The test shall be conducted without the test subject's knowledge of the dexterity test time for each repetition.

6-43.4.4.6 Each test subject shall then perform the test with one pair of gloves following the steps in 6-43.4.4.2 through 6-43.4.4.4 until the variance of the dexterity times of that person's fastest three repetitions does not exceed 8 percent. Variance shall be calculated as in 6-43.4.4.5. The average of the three fastest repetitions shall be used as the dexterity test time with gloves *(DTT_g)*. The test shall be conducted without the test subject's knowledge of the dexterity test time for each repetition.

Copyright National Fire Protection Association
Provided by IHS under license with NFPA
No reproduction or networking permitted without license from IHS
Not for Resale

6-43.4.4.7 The dexterity test times with gloves shall be compared with the baseline dexterity test time for each test subject. The percentage of bare-handed control shall be calculated as follows:

$$\text{Percent of barehanded control} = \frac{DTT_g}{DTT_b} \times 100$$

6-43.5 Report.

6-43.5.1 The average percent of barehanded control shall be reported for each test subject.

6-43.5.2 The average percent of barehanded control for all test subjects shall be reported for each size.

6-43.6 Interpretation.

6-43.6.1 The average percent of barehand control for size small and size large shall be used to determine pass or fail performance.

6-43.6.2 Failure of either size shall constitute failure of the test.

6-44 Grip Test.

6-44.1 Application. This test method shall apply to protective gloves.

6-44.2 Specimens.

6-44.2.1 A minimum of three glove pairs each for size small and size large shall be used for testing.

6-44.2.2 Each sample glove pair shall be tested as a complete set of gloves in new, as distributed condition.

6-44.2.3 Sample glove pairs shall not receive special softening treatments prior to tests.

6-44.2.4 Sample glove pairs shall be tested for each material and construction combination.

6-44.3 Sample Preparation.

6-44.3.1 Samples for conditioning shall be whole gloves.

6-44.3.2 Specimen glove pairs shall be preconditioned as specified in 6-1.2.

6-44.3.3 Specimen glove pairs shall be tested after being conditioned for dry conditions as specified in 6-1.3.

6-44.3.4 Specimen glove pairs shall be tested after being conditioned for wet conditions as specified in 6-1.8.

6-44.4 Apparatus. Grip testing shall be evaluated with the use of a 10-mm ($^{25}/_{64}$-in.) diameter, three-strand, prestretched polyester rope attached to a calibrated force measuring device.

6-44.5 Procedure.

6-44.5.1 Test subjects shall be selected so that their hand dimensions are as close as possible to the middle of the range for hand length and hand circumference as specified in the tables provided for size small and size large gloves in 4-3.7.3.

6-44.5.2 Each test subject shall make three successive attempts to lift as much weight as possible with the rope, using both hands and keeping both feet firmly planted on the ground. The average weight hoisted over the three trials shall be the barehanded weight-lift capability.

6-44.5.3 Dry-conditioned sample gloves shall be tested on a dry rope and then on a wet rope.

6-44.5.4 Wet-conditioned sample gloves shall be tested on a dry rope and then on a wet rope.

6-44.5.5 Each test subject shall test a minimum of three pairs of sample gloves. Test subjects shall attempt one trial with each pair of gloves for a minimum of six grip tests for each set of conditions, with at least three grip tests with size small gloves and three grip tests with size large gloves.

6-44.5.6 Weight-pulling capacity with gloves *(WPC_g)* shall be compared with barehanded weight lift capability *(WLC_b)*. The percentage of weight pulling capacity with gloves to barehanded weight lift capability shall be calculated as follows:

$$\text{Percent of barehanded control} = \frac{WPC_g}{WPC_b} \times 100$$

6-44.6 Report. The percent of barehanded control shall be reported for each sample glove pair, condition, and test subject tested.

6-44.7 Interpretation. One or more sample glove pairs failing this test shall constitute failing performance.

6-45 Ladder Shank Bend Resistance Test.

6-45.1 Application. This test shall apply to protective footwear.

6-45.2 Specimens. A minimum of three footwear ladder shanks shall be tested.

6-45.3 Sample Preparation.

6-45.3.1 Samples for conditioning shall be whole footwear.

6-45.3.2 Ladder shanks shall be conditioned as specified in 6-1.3.

6-45.4 Apparatus.

6-45.4.1 The apparatus shall consist of a tensile testing machine, such as an Instron or equivalent, that challenges a specimen with a simulated ladder rung.

6-45.4.2 A 33-mm diameter × 50-mm long ($1^1/_4$-in. diameter × 2-in. long) noncompressible probe shall be mounted on the movable arm.

6-45.4.3 The specimen support assembly shall consist of two 50 mm × 25 mm × 25 mm (2 in. × 1 in. × 1 in.) noncompressible blocks placed 50 mm (2 in.) apart as shown in Figure 6-45.4.3.

Copyright National Fire Protection Association
Provided by IHS under license with NFPA
No reproduction or networking permitted without license from IHS
Not for Resale

FIGURE 6-45.4.3 Shank bend test setup.

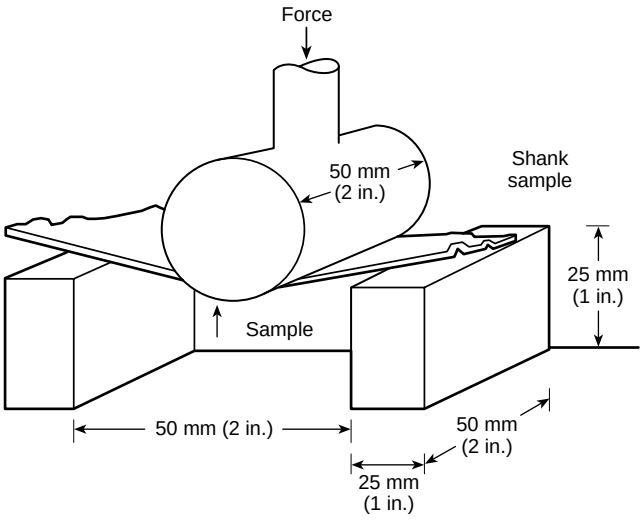

6-45.5 Procedure. The ladder shank shall be placed on mounting blocks as it would be oriented toward the ladder, when the shank is affixed into the protective footwear, and subjected to force on its center with the test probe operated at 50 mm/min. (2 in./min.).

6-45.6 Report.

6-45.6.1 Deflection at 182 kg (400 lb) shall be reported to the nearest 1 mm ($^1/_{32}$ in.).

6-45.6.2 The average deflection shall be calculated and reported to the nearest 1 mm ($^1/_{32}$ in.).

6-45.7 Interpretation. Pass/fail performance shall be determined using the average deflection for all specimens tested.

6-46 Slip Resistance Test.

6-46.1 Application. This test method shall apply to the footwear sole and heel section.

6-46.2 Specimens. A minimum of three complete footwear items shall be tested.

6-46.3 Sample Preparation.

6-46.3.1 Samples for conditioning shall be the whole footwear items.

6-46.3.2 Specimens shall be conditioned as specified in 6-1.3.

6-46.4 Procedure. Slip resistance shall be performed in accordance with ASTM F 489, *Standard Test Method for Static Coefficient of Friction of Shoe Sole and Heel Materials as Measured by the James Machine,* in a dry condition.

6-46.5 Report.

6-46.5.1 The static coefficient of friction of each specimen under both dry and wet conditions shall be reported.

6-46.5.2 The average static coefficient of friction of each specimen under both dry and wet conditions shall be calculated and reported.

6-46.6 Interpretation. One or more footwear specimens failing this test shall constitute failing performance.

6-47 Label Durability and Legibility Test One.

6-47.1 Application.

6-47.1.1 This test method shall apply to labels on proximity protective garments, gloves, and boots.

6-47.1.2 Modifications to this test method for testing garment labels shall be as specified in 6-47.7.

6-47.1.3 Modifications to this test method for testing glove labels shall be as specified in 6-47.8.

6-47.1.4 Modifications to this test method for testing footwear labels shall be as specified in 6-47.9.

6-47.2 Specimens.

6-47.2.1 A minimum of three of each type of label for each element shall be tested in each test.

6-47.2.2 If labels have areas of "write-in" information, two additional specimens shall be tested that include those areas, with sample information written in.

6-47.3 Sample Preparation. Specimens shall be conditioned as specified in 6-1.3.

6-47.4 Procedures.

6-47.4.1 Laundering Durability Test.

6-47.4.1.1 Specimens shall be subjected to ten cycles of laundering and drying using Machine Cycle 1, Wash Temperature V, and Drying Procedure Ai of AATCC 135, *Dimensional Changes in Automatic Home Laundering of Woven and Knit Fabrics.*

6-47.4.1.2 A 1.8-kg, ±0.1 kg (4-lb, ±0.2 lb) load shall be used. A laundry bag shall not be used.

6-47.4.1.3 Specimens shall be examined for legibility to the unaided eye by a person with 20/20 vision, or vision corrected to 20/20, at a nominal distance of 305 mm (12 in.) in a well-illuminated area.

6-47.4.2 Abrasion Durability Test.

6-47.4.2.1 Specimens shall be subjected to abrasion in accordance with ASTM D 4966, *Standard Test Method for Abrasion Resistance of Textile Fabrics,* with the following modifications:

(1) The standard abrasive fabric and the felt backing fabric shall be soaked for 24 hours or agitated in distilled water so that they are thoroughly wet.
(2) Specimens shall be subjected to 200 cycles, 3200 revolutions, of the test apparatus.
(3) The standard abrasive fabric shall be rewetted after each set of cycles by applying 20 ml (0.68 oz) of distilled water from a squeeze bottle by squirting on the center of the abrasive composite pad.

6-47.4.2.2 Specimens shall be examined for legibility to the unaided eye by a person with 20/20 vision, or vision corrected to 20/20, at a nominal distance of 305 mm (12 in.) in a well-illuminated area.

6-47.4.3 Heat Durability Test.

6-47.4.3.1 Specimens shall be subjected to convective heat as specified in 6-1.5.

6-47.4.3.2 Specimens shall be examined for legibility to the unaided eye by a person with 20/20 vision, or vision corrected to 20/20, at a nominal distance of 305 mm (12 in.) in a well-illuminated area.

Copyright National Fire Protection Association
Provided by IHS under license with NFPA
No reproduction or networking permitted without license from IHS
Not for Resale

6-47.5 Report. The legibility for each specimen shall be reported as acceptable or unacceptable.

6-47.6 Interpretation. One or more label specimens failing this test shall constitute failing performance.

6-47.7 Specific Requirements for Testing Garment Labels.

6-47.7.1 For testing label legibility after laundering, specimens shall include individual labels sewn onto a 1-m (1-yd) square ballast material no closer than 50 mm (2 in.) apart in parallel strips. The ballast material shall be as specified in AATCC 135, *Dimensional Changes in Automatic Home Laundering of Woven and Knit Fabrics.*

6-47.7.2 For testing label legibility after abrasion, specimens shall be individual labels.

6-47.7.3 For testing label legibility after convective heat exposure, specimens shall include individual labels sewn onto a separate 380 mm, ±13 mm (15 in., $\pm^1/_2$ in.) square of material that meets the outer shell requirements of this standard.

6-47.7.4 Sample conditioning shall be the same conditioning as specified for the respective tests.

6-47.7.5 Specimens shall be tested separately for legibility after laundering, abrasion, and heat durability tests as specified in 6-47.4.1, 6-47.4.2, and 6-47.4.3, respectively.

6-47.8 Specific Requirements for Testing Glove Labels.

6-47.8.1 For testing label legibility after laundering and convective heat exposure, specimens shall include complete gloves with labels attached.

6-47.8.2 For testing label legibility after abrasion, specimens shall be individual labels.

6-47.8.3 Sample conditioning shall be the same conditioning as specified for the respective tests.

6-47.8.4 Specimens shall be tested separately for legibility after laundering, abrasion, and heat durability tests as specified in 6-47.4.1, 6-47.4.2, and 6-47.4.3, respectively.

6-47.9 Specific Requirements for Testing Footwear Labels.

6-47.9.1 For testing label legibility after abrasion, specimens shall be individual labels.

6-47.9.2 Sample conditioning shall be the same conditioning as specified for the respective tests.

6-47.9.3 Specimens shall be tested separately for legibility after abrasion and heat durability tests as specified in 6-47.4.2 and 6-47.4.3, respectively.

6-48 Label Durability and Legibility Test Two.

6-48.1 Application. This test method shall apply to labels on helmets.

6-48.2 Specimens. Specimens shall be selected as specified in 2-3.9.

6-48.3 Sample Preparation.

6-48.3.1 Samples for conditioning shall be whole helmets with the labels attached.

6-48.3.2 Specimens shall be conditioned as specified in 6-1.3, 6-1.4, 6-1.6, and 6-1.7.

6-48.4 Procedure. Label specimens shall be examined for legibility by a person with 20/20 vision, or vision corrected to 20/20, at a nominal distance of 305 mm (12 in.) in a well-illuminated area.

6-48.5 Report. The legibility for each label specimen shall be reported as acceptable or unacceptable.

6-48.6 Interpretation. One or more label specimens failing this test shall constitute failing performance.

6-49 Shell Retention Test.

6-49.1 Application. This test shall apply to protective helmets.

6-49.2 Specimens. Specimens shall be selected as specified in 2-3.9.

6-49.3 Sample Preparation.

6-49.3.1 Samples for conditioning shall be whole helmets.

6-49.3.2 Specimens shall be conditioned as specified in 6-1.3.

6-49.4 Apparatus. The shell retention test fixtures shall consist of rigid material of sufficient thickness and optional design to facilitate firm attachment of the helmet shell while attached to the chin strap tensile testing machine.

6-49.5 Procedure.

6-49.5.1 The specimen shall be tested by applying a pull force to the helmet shell perpendicular to the reference plane to a maximum load of 36.5 kg (80 lb) within 30 seconds.

6-49.5.2 The maximum load shall be maintained for 1 minute, +5/−0 seconds.

6-49.6 Report. The pass/fail results shall be recorded.

6-49.7 Interpretation. Any one specimen failing the test shall constitute failing performance for the item being tested.

6-50 Luminous (Visible) Transmittance Test.

6-50.1 Application. This test shall apply to faceshield component lenses.

6-50.2 Specimens. Specimens shall be selected as specified in 2-3.1.1.

6-50.3 Sample Preparation.

6-50.3.1 Samples for conditioning shall be complete faceshield components.

6-50.3.2 Specimens shall be conditioned as specified in 6-1.3.

6-50.4 Apparatus. The standard source of radiant energy used in the measurement of luminous transmittance of filter lenses shall be a projection-type lamp No. T-8 or other high-powered, gas-filled, tungsten-filament incandescent lamp, operated at the color temperature corresponding to Commission Internationale de l'Eclairage (CIE), Source A.

6-50.5 Procedure. Luminous transmittance shall be determined by one of the following means:

(1) By measuring the spectral transmittance and calculating the luminous transmittance through the use of published data on the spectral radiant energy of CIE Standard Illuminant A, as specified in ISO/CIE 10526, *Calorimetric Illuminants*, and the relative luminous efficiency of the average eye

Copyright National Fire Protection Association
Provided by IHS under license with NFPA
No reproduction or networking permitted without license from IHS
Not for Resale

(2) *By using a Gardner pivotal sphere hazemeter and the standards of luminous transmittance maintained by the National Bureau of Standards

6-50.6 Report.

6-50.6.1 The percent of light transmission shall be reported for each specimen.

6-50.6.2 The average light transmission of all specimens tested shall be calculated and reported.

6-50.7 Interpretation. Pass/fail performance shall be based on the average light transmission measured.

6-51 Helmet Shroud Opening Size Retention Test.

6-51.1 Application.

6-51.1.1 This test shall apply to the face openings or SCBA facepiece interface openings of helmet shrouds.

6-51.1.2 Helmet shrouds with either elastic face openings or manually adjustable face openings shall be tested by the procedure specified in 6-51.4.

6-51.1.3 Helmet shrouds designed for interface with a SCBA facepiece(s) shall be tested by the procedure specified in 6-51.5.

6-51.2 Specimens. A minimum of three whole shrouds shall be tested.

6-51.3 Sample Preparation.

6-51.3.1 Samples for conditioning shall be whole shrouds.

6-51.3.2 Specimens shall be conditioned as specified in 6-1.3.

6-51.4 Procedure for Elastic or Manually Adjusted Face Openings.

6-51.4.1 The shroud shall be laid on a flat surface with the face opening facing up.

6-51.4.2 The shroud face opening shall be measured at a minimum of eight separate locations around the entire perimeter of the face opening. The locations of measurement shall be marked on the shroud.

6-51.4.3 The shroud shall be positioned on the ISO size J headform specified in Figure 6-19.4.1 so that the shroud is around the neck area of the headform with the neck and head area of the headform protruding through the face opening of the shroud. The shroud shall then be donned and doffed for 50 cycles, passing the shroud face opening up and over the headform to cover the head, forehead, sides of face, chin, and neck each time and then passing the shroud back down over the headform to the starting area around the neck. Hoods with manually adjustable face openings shall have the face opening adjusted during each cycle, once after donning and again before doffing.

6-51.4.4 Following the 50 cycles, the shroud shall be removed from the headform and the shroud shall be allowed to relax for 1 minute.

6-51.4.5 The shroud shall be laid on a flat surface with the face opening facing up.

6-51.4.6 The opening dimensions shall then be measured at the same locations marked around the entire perimeter of the face opening specified in 6-51.4.2.

6-51.4.7 The percent difference of the shroud face opening dimensions before and after donning shall be determined.

6-51.5 Procedure for SCBA Facepiece Interface Openings.

6-51.5.1 The SCBA facepiece that the shroud is designed to interface with shall be properly mounted, according to the SCBA manufacturer's instructions, on an ISO size J headform specified in Figure 6-19.4.1.

6-51.5.2 The shroud shall then be donned on the headform, placing it over the SCBA facepiece.

6-51.5.3 The contact surface of the shroud face opening with the SCBA facepiece shall be measured at a minimum of eight separate locations around the entire perimeter of the face opening contact area. The locations of measurement shall be marked on the shroud.

6-51.5.4 With the SCBA facepiece in place, the shroud shall then be positioned so that the shroud is around the neck area of the headform with the neck and head area of the headform protruding through the face opening of the shroud. The shroud shall then be donned and doffed for 50 cycles, passing the shroud face opening up and over the headform to cover the head and to contact the SCBA facepiece around the entire perimeter of the face opening contact area each time, and then passing the shroud back down over the headform to the starting area around the neck. Where such shrouds are designed to be manually adjustable around the shroud face opening/SCBA facepiece interface area, the manual adjustment shall be made during each cycle, once after donning and again before doffing.

6-51.5.5 Following the 50 cycles, the shroud shall be removed from the headform, and the shroud shall be allowed to relax for 1 minute.

6-51.5.6 The shroud shall then be donned on the headform, placing it over the SCBA facepiece.

6-51.5.7 The contact surface of the shroud face opening with the SCBA facepiece shall be measured at the same locations marked around the entire perimeter of the face opening contact area specified in 6-51.5.3.

6-51.5.8 The percent difference of the shroud face opening dimensions before and after donning shall be determined.

6-51.6* Report.

6-51.6.1 The percent difference of the shroud face opening dimensions shall be reported for each specimen.

6-51.6.2 The average difference of the shroud face opening dimensions shall be calculated and reported.

6-51.7 Interpretation. Pass/fail performance shall be based on the average difference of the shroud face opening dimensions.

6-52 Whole Garment Liquid Penetration Test.

6-52.1 Application.

6-52.1.1 This test method shall apply to proximity protective garments.

6-52.1.2 Modifications to this test method for testing protective coats shall be as specified in 6-52.8.

6-52.1.3 Modifications to this test method for testing protective trousers shall be as specified in 6-52.9.

6-52.1.4 Modifications to this test method for testing protective coat and trouser sets or protective coveralls shall be as specified in 6-52.10.

Copyright National Fire Protection Association
Provided by IHS under license with NFPA
No reproduction or networking permitted without license from IHS
Not for Resale

6-52.2 Specimens.

6-52.2.1 Where the design to be tested has passed the Liquid Penetration Requirements specified in 5-1.15 of NFPA 1971, *Standard on Protective Ensemble for Structural Fire Fighting*, and the only change to the product is from a structural outer shell to a proximity outer shell, at least one specimen shall be tested. Where the design has not been tested to the requirements specified in 5-1.15 of NFPA 1971, *Standard on Protective Ensemble for Structural Fire Fighting*, then a minimum of three specimens shall be tested.

6-52.2.2 The size of the elements comprising the specimens shall be chosen to conform with the dimensions of the mannequin for proper fit of the specimen on the mannequin in accordance with the manufacturer's sizing system. The size of the elements comprising the specimen shall be the same size as the mannequin in terms of chest circumference, waist circumference, and inseam height.

6-52.3 Sample Preparation.

6-52.3.1 Specimens to be tested shall be conditioned as specified in 6-1.3.

6-52.3.2 Samples to be conditioned shall be complete garments.

6-52.4 Apparatus. The apparatus and supplies for testing shall be those specified in ASTM F 1359, *Standard Practice for Evaluating the Liquid-Tight Integrity of Chemical Protective Clothing*, with the following modifications:

(1) The surface tension of the water used in testing shall be 35 dynes/cm, ±5 dynes/cm.
(2) *The mannequin used in testing shall be fully upright and shall have straight arms and legs, with the arms positioned at the mannequin's side.

6-52.5 Procedure. Liquid penetration testing of garments shall be conducted in accordance with ASTM F 1359, *Standard Practice for Evaluating the Liquid-Tight Integrity of Chemical Protective Clothing*, with the following modifications:

(1) No provision for partial garments shall be permitted.
(2) Blocking of the specimen shall be as specified in 6-52.8, 6-52.9, and 6-52.10, as appropriate, for the type of specimen being tested.
(3) The method used for mounting of the mannequin in the spray chamber shall not interfere with the water spray.
(4) The normal outer surface of the material shall be exposed to the liquid as oriented in the clothing item.
(5) Fluorescent or visible dyes shall not be used in the water for spraying the suited mannequin.
(6) The suited mannequin shall be exposed to the liquid spray for a total of 20 minutes, 5 minutes in each of the four mannequin orientations.
(7) At the end of the liquid spray exposure period, excess liquid shall be removed from the surface of the specimen.
(8) The specimen shall be inspected within 10 minutes of the end of the liquid spray exposure period for evidence of liquid penetration.

6-52.6 Report. A diagram shall be prepared for each test that identifies the locations of any liquid leakage as detected on the liquid-absorptive garment and the interior of the garment.

6-52.7 Interpretation. Any evidence of liquid on the liquid-absorptive garment, as determined by visual, tactile, or absorbent toweling, shall constitute failure of the specimen.

6-52.8 Specific Requirements for Testing Coats.

6-52.8.1 The liquid-absorptive garment shall cover only the upper torso and arms of the mannequin from the middle of the mannequin neck, down to the mannequin waistline, and down to the mannequin wrist crease.

6-52.8.2 The coat shall be donned on the mannequin in accordance with the manufacturer's instructions for proper wearing.

6-52.8.3 The coat collar shall be placed in the up position on the mannequin with the collar closure system fastened in the closed position. The head of the mannequin shall be sealed off with a plastic bag. The plastic bag shall extend downward over the collar a distance not greater than 25 mm (1 in.) and shall be taped down using duct tape or similar waterproof tape. The tape shall not extend downward more than 75 mm (3 in.) from the top of the collar. The bottom edge of the tape and the plastic bag shall not come closer than 25 mm (1 in.) of the collar seam where a seam is present. Where present, the collar neck seam shall not be covered.

6-52.8.4 The test shall be conducted with the mannequin hands removed. The coat sleeve hem shall be taped smoothly to a can or an object of similar cylindrical, rigid shape of the same nominal diameter as the sleeve opening. The can or cylindrical object shall be fitted over the wristlet and under the coat outer shell sleeve hem. The tape shall be duct tape or similar waterproof tape.

6-52.8.5 The coat shall be tested in conjunction with the protective trousers specified by the manufacturer, even where the trousers are not being specifically evaluated by this test.

6-52.9 Specific Requirements for Testing Trousers.

6-52.9.1 The liquid-absorptive garment shall cover only the lower torso and legs of the mannequin from the mannequin waistline down to the mannequin ankles.

6-52.9.2 The trousers shall be donned on the mannequin in accordance with the manufacturer's instructions for proper wearing.

6-52.9.3 Trousers shall be tested in conjunction with the protective coat specified by the manufacturer, even where the coat is not being specifically evaluated by this test.

6-52.9.4 Absorbent toweling, or similar material, shall be placed underneath the mannequin in order to prevent water splashing up inside the trouser leg.

6-52.10 Specific Requirements for Testing Coveralls and for Testing Sets of Coats and Trousers.

6-52.10.1 The liquid-absorptive garment shall only cover the torso, arms, and legs of the mannequin from the middle of the mannequin neck down to the mannequin wrist crease, and down to 203 mm (8 in.) above the bottom of the heel.

6-52.10.2 The coverall or set of coat and trousers shall be donned on the mannequin in accordance with the manufacturer's instructions for proper wearing.

6-52.10.3 The coat collar shall be placed in the up position on the mannequin with the collar closure system fastened in the closed position. The head of the mannequin shall be sealed off with a plastic bag. The plastic bag shall extend downward over the collar a distance not greater than 25 mm (1 in.) and shall be taped down using duct tape or similar waterproof tape. The tape shall not extend downward more than 75 mm

Copyright National Fire Protection Association
Provided by IHS under license with NFPA
No reproduction or networking permitted without license from IHS
Not for Resale

(3 in.) from the top of the collar. The collar neck seam shall not be covered.

6-52.10.4 The test shall be conducted with the mannequin hands removed. The coat sleeve hem shall be taped smoothly to a can or an object of similar cylindrical, rigid shape of the same nominal diameter as the sleeve opening. The can or cylindrical object shall be fitted over the wristlet and under the coat outer shell sleeve hem. The tape shall be duct tape or similar waterproof tape.

6-52.10.5 Absorbent toweling or similar material shall be placed underneath the mannequin in order to prevent water splashing up inside the trouser leg.

6-53 Eyelet and Stud Post Attachment Test.

6-53.1 Application. This test method shall apply to protective footwear eyelets and stud posts.

6-53.2 Specimens.

6-53.2.1 Specimens shall total two eyelets and two stud posts on three separate footwear items.

6-53.2.2 Specimens shall be removed from the footwear and shall be 25 mm × 51 mm (1 in. × 2 in.).

6-53.3 Sample Preparation.

6-53.3.1 Samples for conditioning shall be whole footwear.

6-53.3.2 The eyelets or stud post specimens shall be conditioned as specified in 6-1.3.

6-53.4 Apparatus.

6-53.4.1 A tensile testing machine shall be used with a traverse rate of 51 mm/min (2 in./min).

6-53.4.2 Clamps measuring 25 mm × 38 mm (1 in. × $1^1/_2$ in.) shall have gripping surfaces that are parallel, flat, and capable of preventing slippage of the specimen during the test.

6-53.5 Procedure.

6-53.5.1 The stud post or eyelet puller shall be inserted or attached to the upper position of the tensile machine.

6-53.5.2 The traverse rate shall be set at 50 mm/min (2 in./min).

6-53.5.3 The test eyelet or stud post shall be attached using the appropriate puller fixture. The eyelet stay shall be clamped, but clamping the metal portion of the eyelets or stud hook in the lower clamps shall not be permitted.

6-53.5.4 The distance between the clamps and stud hooks or eyelets shall be 2 mm to 3 mm ($^1/_{16}$ in. to $^1/_8$ in.).

6-53.5.5 The test shall then be started.

6-53.6 Report.

6-53.6.1 The force will reach a peak, decline slightly, and then increase to complete failure; however, the value at which the force first declines shall be recorded and reported as the initial failure point, as this is the separation point of the material around the eyelet or stud post.

6-53.6.2 The average force shall be calculated and reported.

6-53.7 Interpretation. The average force shall be used to determine pass/fail.

Chapter 7 Referenced Publications

7-1 The following documents or portions thereof are referenced within this standard as mandatory requirements and shall be considered part of the requirements of this standard. The edition indicated for each referenced mandatory document is the current edition as of the date of the NFPA issuance of this standard. Some of these mandatory documents might also be referenced in this standard for specific informational purposes and, therefore, are also listed in Appendix B.

7-1.1 NFPA Publications. National Fire Protection Association, 1 Batterymarch Park, P.O. Box 9101, Quincy, MA 02269-9101.

NFPA 1500, *Standard on Fire Department Occupational Safety and Health Program*, 1997 edition.

NFPA 1971, *Standard on Protective Ensemble for Structural Fire Fighting*, 2000 edition.

7-1.2 Other Publications.

7-1.2.1 AATCC Publications. American Association of Textile Chemists and Colorists, P.O. Box 12215, Research Triangle Park, NC 27709.

AATCC 70, *Test Method for Water Repellency: Tumble Jar Dynamic Absorption Test*, 1988.

AATCC 135, *Dimensional Changes in Automatic Home Laundering of Woven and Knit Fabrics*, 1989.

7-1.2.2 ANSI Publications. American National Standards Institute, 11 West 42nd St., New York, NY 10036.

ANSI Z34.1, *American National Standard for Third-Party Certification Programs for Products, Processes, and Services*, 1993.

ANSI Z41, *Standard for Personal Protection—Protective Footwear*, 1991.

7-1.2.3 ASTM Publications. American Society for Testing and Materials, 100 Barr Harbor Drive, West Conshohocken, PA 19428-2959.

ASTM B 117, *Standard Method of Salt Spray (Fog) Testing*, 1985.

ASTM B 152, *Specification for Copper Sheet, Strip Plate, and Rolled Bar*, 1986.

ASTM D 471, *Standard Test Method for Rubber Property—Effect of Liquids*, 1995.

ASTM D 1630, *Standard Test Method for Rubber Property—Abrasion Resistance (Footwear Abrader)*, 1994.

ASTM D 1683, *Standard Test Method for Failure in Sewn Seams of Woven Fabrics*, 1990.

ASTM D 3787, *Standard Test Method for Hydraulic Bursting Strength of Knitted Goods and Nonwoven Fabrics—Ball Burst Testing Method*, 1989.

ASTM D 3940, *Standard Test Method for Bursting Strength (Load) and Elongation of Sewn Seams of Knit or Woven Stretch Textile Fabrics*, 1983.

ASTM D 4108, *Standard Method for Thermal Protective Performance of Materials for Clothing, Open-Flame Method*, 1987.

ASTM D 4966, *Standard Test Method for Abrasion Resistance of Textile Fabrics*, 1989.

ASTM D 5733, *Standard Test Method for Tearing Strength of Nonwoven Fabrics by the Trapezoid Procedure*, 1995.

ASTM F 489, *Standard Test Method for Static Coefficient of Friction of Shoe Sole and Heal Materials as Measured by the James Machine*, 1977.

ASTM F 903, *Standard Test Method for Resistance of Protective Clothing Materials to Penetration by Liquids*, 1990.

ASTM F 1060, *Standard Test Method for Thermal Protective Performance of Materials for Protective Clothing for Hot Surface Contact*, 1987.

--`,,`-`-`,,`,,`,`,,`---

Copyright National Fire Protection Association
Provided by IHS under license with NFPA
No reproduction or networking permitted without license from IHS
Not for Resale

ASTM F 1116, *Standard Test Method for Determining Dielectric Strength of Overshoe Footwear*, 1988.

ASTM F 1342, *Standard Test Method for Protective Clothing Material Resistance to Puncture*, 1991.

ASTM F 1359, *Standard Practice for Evaluating the Liquid-Tight Integrity of Chemical Protective Clothing*, 1991.

ASTM F 1671, *Standard Test Method for Resistance of Materials Used in Protective Clothing to Penetration by Blood-Borne Pathogens Using Phi-X-174 Bacteriophage as a Test System*, 1995.

ASTM F 1790, *Standard Test Methods for Measuring Cut Resistance of Materials Used in Protective Clothing*, 1997.

7-1.2.4 Commission Internationale de l'Eclairage. U.S. National Committee of the CIE, c/o Mr. Thomas M. Lemons, TLA — Lighting Consultants, Inc., 7 Pond Street, Salem, MA 01970-4819.

ISO/CIE 10526, *Calorimetric Illuminants*, 1991.

7-1.2.5 FIA Publication. Footwear Industries of America, 1420 K Street, NW, Suite 600, Washington, DC 20005.

FIA Standard 1209, *Whole Shoe Flex*, 1984.

7-1.2.6 GSA Publications. General Services Administration, Specifications Activity, Printed Materials Supply Division, Building 197, Naval Weapons Plant, Washington, DC 20407.

Federal Specification CCC-C-419G, *Cloth, Duck, Unbleached, Plied-Ya 77is, Army and Numbered*, 18 December 1989.

Federal Specification QQ-S-766, *Steel Plate, Sheet, and Strip-Corrosion Resisting*, 5 February 1988.

Federal Test Method Standard 191A, *Textile Test Methods*, 20 July 1978.

7-1.2.7 ISO Publications. International Standards Organization, 1 rue de Varembé, Case Postale 56, CH-1211 Geneve 20, Switzerland.

ISO Guide 25, *General requirements for the competence of calibration and testing laboratories*, 1990.

ISO 9001, *Quality Systems — Model for Quality Assurance in Design, Development, Production, Installation, and Servicing*, 1994.

7-1.2.8 SAE Publication. Society of Automotive Engineers, 400 Commonwealth Drive, Warrendale, PA 15096.

SAE J211, *Instrumentation for Impact Test*, 1988.

7-1.2.9 U.S. Department of Defense. Standardization Document Order Desk, Defense Automation and Production Service, Building 4/D, 700 Robbins Avenue, Philadelphia, PA 19111-5094.

MIL-F-10884G, *Fastener, Snap*, 16 June 1995.

A-A-55126A, *Fastener Tapes, Hook and Loop, Synthetic*, 23 June 1999.

A-A-55634, *Zippers (Fastener, Slide Interlocking)*, 20 March 1998.

7-1.2.10 Stoll, A. M. and M. A. Chianta, "Method and Rating System for Evaluation of Thermal Protection," *Aerospace Medicine*, Vol. 40, 1968, pp. 1232-38.

Appendix A Explanatory Material

Appendix A is not a part of the requirements of this NFPA document but is included for informational purposes only. This appendix contains explanatory material, numbered to correspond with the applicable text paragraphs.

A-1-1 Organizations responsible for specialized functions including, but not limited to, wildland fire fighting, proximity and other specialized fire fighting, emergency medical service, special operations, and hazardous materials response should specify and use appropriate protective clothing and protective equipment specifically designed for those activities.

A-1-2 This standard is not designed to be used as a purchase specification. It is prepared, as far as practicable, with regard to required performance, avoiding restriction of design wherever possible. Purchasers should specify departmental requirements for such items as color, markings, closures, pockets, and trim patterns. Tests specified in this standard should not be deemed as defining or establishing performance levels for protection from all proximity fire-fighting environments.

A-1-2.2 The testing requirements in Chapter 6 of this standard are not intended to establish the limitations of the working environment for fire fighting but to establish material performance. Users should be advised that when a continual increase of heat is felt through the protective ensemble, the protective ensemble might be nearing its maximum capability and injury could be imminent.

Users should be advised that if unusual conditions prevail, or if there are signs of abuse or mutilation of the protective ensemble or any element or component thereof, or if modifications or replacements are made or accessories are added without authorization of the protective ensemble element manufacturer, the margin of protection might be reduced.

Users should be advised that the protective properties in new proximity fire-fighting protective ensemble elements, as required by this standard, can diminish as the product is worn and ages.

A-1-3.1 Accessories. Such accessories include, but are not limited to, utility belts, harnesses, back packs, tools, tool packs, radios, radio packs, suspenders, lights, and heat-sensing devices.

A-1-3.3 Approved. The National Fire Protection Association does not approve, inspect, or certify any installations, procedures, equipment, or materials; nor does it approve or evaluate testing laboratories. In determining the acceptability of installations, procedures, equipment, or materials, the authority having jurisdiction may base acceptance on compliance with NFPA or other appropriate standards. In the absence of such standards, said authority may require evidence of proper installation, procedure, or use. The authority having jurisdiction may also refer to the listings or labeling practices of an organization that is concerned with product evaluations and is thus in a position to determine compliance with appropriate standards for the current production of listed items.

A-1-3.5 Authority Having Jurisdiction. The phrase "authority having jurisdiction" is used in NFPA documents in a broad manner, since jurisdictions and approval agencies vary, as do their responsibilities. Where public safety is primary, the authority having jurisdiction may be a federal, state, local, or other regional department or individual such as a fire chief; fire marshal; chief of a fire prevention bureau, labor department, or health department; building official; electrical inspector; or others having statutory authority. For insurance purposes, an insurance inspection department, rating bureau, or other insurance company representative may be the authority having jurisdiction. In many circumstances, the property owner or his or her designated agent assumes the role of the authority having jurisdiction; at government installations, the commanding officer or departmental official may be the authority having jurisdiction.

--`,,`-`-`,,`,,`,`,,`---

Copyright National Fire Protection Association
Provided by IHS under license with NFPA
No reproduction or networking permitted without license from IHS

Not for Resale

A-1-3.10 Bitragion Coronal Arc. See Figure A-1-3(a).

FIGURE A-1-3(a) Bitragion coronal arc.

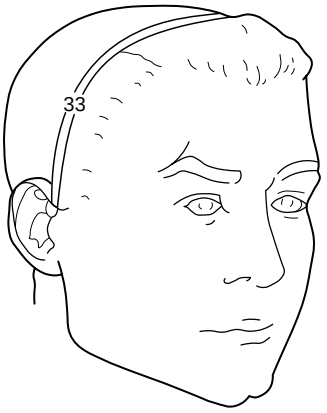

A-1-3.11 Bitragion Inion Arc. See Figure A-1-3(b).

FIGURE A-1-3(b) Bitragion inion arc.

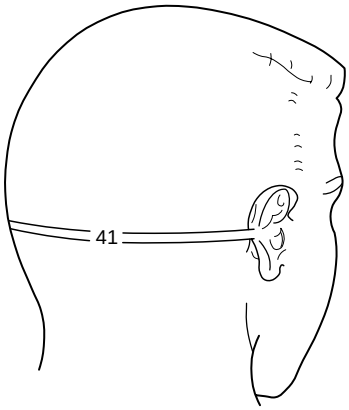

A-1-3.35 Entry Fire Fighting. Examples of types of fires that commonly produce extreme levels of convective, conductive, and radiant heat and could result in incidents incorporating entry fire-fighting operations include, but are not limited to, bulk flammable liquid fires, bulk flammable gas fires, and aircraft fires. Highly specialized thermal protection is necessary for persons involved in such extraordinarily specialized operations due to the scope of these operations and because direct entry into flames is made. Usually these operations are exterior operations. Entry fire fighting is not structural fire fighting.

A-1-3.66 Listed. The means for identifying listed equipment may vary for each organization concerned with product evaluation; some organizations do not recognize equipment as listed unless it is also labeled. The authority having jurisdiction should utilize the system employed by the listing organization to identify a listed product.

A-1-3.84 Proximity Fire Fighting. Examples of fires that commonly produce high levels of radiant heat as well as convective and conductive heat, and could result in incidents incorporating proximity fire-fighting operations include, but are not limited to, bulk flammable liquid fires, bulk flammable gas fires, bulk flammable metal fires, and aircraft fires. Specialized thermal protection is necessary for persons involved in such operations due to the scope of these operations and the close distance to the fire at which these operations are conducted, although direct entry into flame is *not* made. These operations usually are exterior operations but might be combined with interior operations. Proximity fire fighting is not structural fire fighting but might be combined with structural fire-fighting operations. Proximity fire fighting also is not entry fire fighting.

A-1-3.89 Proximity Protective Footwear. See Figure A-1-3 (c).

FIGURE A-1-3(c) Identification of footwear terms.

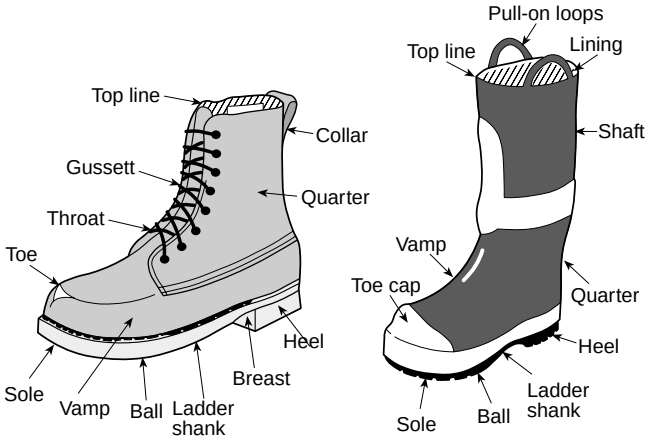

A-2-1.4 The National Fire Protection Association (NFPA), from time to time, has received complaints that certain items of fire and emergency services protective clothing or protective equipment might be carrying labels falsely identifying them as compliant with an NFPA standard.

NFPA advises those purchasing proximity protective ensembles or protective ensemble elements to be aware of the following:

For proximity protective ensembles or protective ensemble elements to meet the requirements of NFPA 1976, *Standard on Protective Ensemble for Proximity Fire Fighting*, they must be certified by an independent third-party certification organization. *In addition, the item must carry the label, symbol, or other identifying mark of that certification organization.*

A proximity protective ensemble or element that does not bear the mark of an independent third-party certification organization is NOT COMPLIANT with NFPA 1976, even if the product label states that the proximity protective ensemble or element is compliant!

For further information about certification and product labeling, Chapters 2 and 3 of NFPA 1976 should be referenced. Also, the definitions for *certification/certified*, *labeled*, and *listed* in Section 1-3 should be reviewed.

Third-party certification is an important means of ensuring the quality of fire and emergency services protective clothing and equipment. To be certain that an item is properly certified, labeled, and listed, the NFPA recommends that prospective purchasers require appropriate evidence of certification for the specific product and model from the manufacturer before purchasing. Prospective purchasers also should contact the certification organizations and request copies of the certification organization's *list* of certified products to the appropriate NFPA standard. This *listing* is a requirement of third-party certification by this standard and is a service performed by the certification organization.

All NFPA standards on fire and emergency services protective clothing and equipment require that the item be certified

Copyright National Fire Protection Association
Provided by IHS under license with NFPA
No reproduction or networking permitted without license from IHS
Not for Resale

by an independent third-party certification organization and, as with NFPA 1976 proximity protective ensembles or protective ensemble elements, all items of fire and emergency services protective clothing and equipment must carry the label, symbol, or other identifying mark of that certification organization.

Any item of protective clothing or protective equipment, covered by an NFPA standard, that does not bear the mark of an independent third-party certification organization is NOT COMPLIANT with the appropriate NFPA standard, even if the product label states that the item is compliant!

A-2-2.1 The certification organization should have a sufficient breadth of interest and activity so that the loss or award of a specific business contract would not be a determining factor in the financial well-being of the agency.

A-2-2.3 The contractual provisions covering certification programs should contain clauses advising the manufacturer that, if requirements change, the product should be brought into compliance with the new requirements by a stated effective date through a compliance review program involving all currently listed products.

Without these clauses, certifiers would not be able to move quickly to protect their name, marks, or reputation. A product safety certification program would be deficient without these contractual provisions and the administrative means to back them up.

A-2-2.4 Investigative procedures are important elements of an effective and meaningful product safety certification program. A preliminary review should be carried out on products submitted to the agency before any major testing is undertaken.

A-2-2.7 Such factory inspections should include, in most instances, witnessing of production tests. With certain products, the certification organization inspectors should select samples from the production line and submit them to the main laboratory for countercheck testing. With other products, it might be desirable to purchase samples in the open market for test purposes.

A-2-2.9 For further information and guidance on recall programs, see Title 21, *Code of Federal Regulations*, Part 7, Subpart C (21 CFR 7, Subpart C).

A-3-1.1 Purchasers might wish to include a requirement in the purchase specifications for an additional label that includes certain information such as the date of manufacture, manufacturer's name, and garment identification number to be located in a protected location on the garment in order to reduce the chance of label degradation and as a backup source of information to aid in garment tracking or during an investigation.

A-3-1.3 See A-2-1.4.

A-3-2.1 Purchasers might wish to include a requirement in purchase specifications for an additional label containing certain information such as date of manufacture, manufacturer's name, and helmet identification number to be located in a protected location in the helmet to reduce the chance of label degradation and as a backup source of information to aid in helmet tracking or during an investigation.

A-3-2.3 See A-2-1.4.

A-3-2.4 A statement should be included in the user information specifying that, upon the purchaser's request, the manufacturer will furnish all documentation required by this standard and the test data showing compliance with this standard. A statement also should be included in the user information specifying that, upon the purchaser's request, the manufacturer will furnish a complete specification of all materials and components comprising each certified helmet.

A-3-2.6 The Brannock Scientific Foot Measuring Device can be obtained from the Brannock Device Company, 509 East Fayette Street, Syracuse, NY 13202; 315-475-9862.

A-4-1 A proximity protective ensemble consisting in part of both a proximity protective coat and proximity protective trousers is required to be used for proximity fire fighting by Section 5-4 of NFPA 1500, *Standard on Fire Department Occupational Safety and Health Program*, for protection of the fire fighter's torso and limbs. An overlap of coat and trousers by measurement of the garments on the wearer also is required by 5-4.1.1 of NFPA 1500. Using three-quarter-length boots instead of protective trousers leads to increased burn injury for the lower torso, since they significantly reduce leg, groin, and buttock protection. Wearing three-quarter-length boots instead of protective trousers is *prohibited* by NFPA 1500.

Purchasers of protective clothing should realize that fire fighters have to wear many items of protective clothing and equipment. Any interference by one item with the use of another might result in inefficient operations or unsafe situations. Chest girth, sleeve length, and coat length should be required for protective coats; waist girth, inseam length, and crotch rise should be required for protective trousers; chest girth, sleeve length, waist girth, outseam length from the underarm to the pant cuff, and trunk length from the base of neck to the crotch fold should be required for protective coveralls. Since manufacturers' patterns vary, to ensure proper fit, measurement for sizing should be done by the manufacturer's representative or by a trained person in accordance with the manufacturer's instructions.

A-4-1.2 Purchasers might wish to specify additional reinforcement or padding in high-wear or load-bearing areas, such as pockets, cuffs, knees, elbows, and shoulders. Padding could include additional thermal barrier material meeting requirements as specified herein. Reinforcing material could include the outer shell material or leather. Purchasers are cautioned that additional weight caused by excessive reinforcement or padding could lead to user fatigue.

A-4-1.3 The fastener system should be specified by the purchaser. Fastener system methods can include, but are not limited to, the following:

(1) Entirely securing the thermal barrier and moisture barrier to a component part of the outer shell with snap fasteners or fastener tape
(2) Zipping the thermal barrier and moisture barrier to the outer shell
(3) Stitching the thermal barrier and moisture barrier into the coat in the neck and into the trouser in the waist area, with snap fasteners or hook and pile fasteners securing the remainder
(4) Entirely stitching the thermal barrier and moisture barrier to the outer shell

It is recommended that the thermal barrier and moisture barrier be detachable to facilitate cleaning of the garments.

A-4-1.11 Placement should allow for access to the pockets while wearing SCBA. Where desired, flaps to cover pocket

Copyright National Fire Protection Association
Provided by IHS under license with NFPA
No reproduction or networking permitted without license from IHS
Not for Resale

openings, to prevent liquid or debris from entering, should be specified in the purchase specifications.

A-4-1.14.2 Purchasers should consider specifying wristlets with a thumb hole or bartack that create a thumb hole for the wearer's thumb in order to ensure protection when arms are in the raised position.

A-4-1.14.5 Coat length is not addressed in this document as it must be determined by the individual donning both coat and trouser and proceeding through the directions contained in NFPA 1500 to ensure adequate overlap between the coat and trouser. Overlap is a significant safety issue and can be best addressed by careful overlap evaluation and ensuring only those coat/trouser combinations are worn that are recommended by the manufacturer of those ensemble items.

A-4-1.15.1 A proximity protective ensemble consisting in part of both a proximity protective coat and proximity protective trousers is required to be used for proximity fire fighting by Section 5-4 of NFPA 1500, *Standard on Fire Department Occupational Safety and Health Program*, for protection of the fire fighter's torso and limbs. An overlap of coat and trousers by measurement of the garments on the wearer also is required by NFPA 1500. Using three-quarter-length boots instead of protective trousers leads to increased burn injury to the lower torso, since they significantly reduce leg, groin, and buttock protection. Wearing of three-quarter-length boots instead of protective trousers is *prohibited* by 5-4.1 of NFPA 1500.

A-4-3.7.3 The values contained in Tables 4-3.7.3(a) through (e) are bare-handed dimensions, not glove pattern dimensions. Guidelines for applying these dimensions to flat glove patterns vary, depending on such factors as the type of pattern, the number of layers in the glove, and the type of fit desired for the glove.

The values contained in the five tables are those that apply to a five-size system intended to fit a population defined as the fifth percentile, female, through the 95th percentile, male, in the U.S. Army. These values are not valid if other than a five-size system is being used or if the demographics of the intended population vary.

Caution should be used in determining the specific value to be used in glove patterning from the given range of values for a particular dimension and glove size. The choice of the lowest, middle, or highest value is related to expectations of how the glove will fit.

A-4-4.8.2 The Brannock Scientific Foot Measuring Device can be obtained from the Brannock Device Company, 509 East Fayette Street, Syracuse, NY 13202; 315-475-9862.

A-5-1.19 Fire fighters can encounter many common liquids during the normal performance of their duties, as when performing as proximity fire-fighting operations. The performance requirements of 5-1.19 should not be interpreted to mean that the proximity protective garments are suitable or are permitted to be used for protection to the wearer during any hazardous materials operation. The intent of this standard is to provide protection from intrusion throughout the proximity protective garment body by certain liquids, including some common chemicals. The performance and testing requirements of proximity protective garment materials for exposure to common chemicals when directly evaluating the whole proximity protective garment for this property have not yet been evaluated.

A-5-3.14 Fire fighters can encounter biohazards during the normal performance of their duties, including rescue of victims from fires, extrication of victims from entrapment situations, provision of first responder or emergency medical care, or other rescue situations. The intent of this standard is to provide protection from intrusion throughout the glove body by blood-borne pathogens and other liquid-borne pathogens.

A-5-3.15 Fire fighters can encounter many common liquids during the normal performance of their duties, such as during proximity fire-fighting operations. The performance requirement of 5-3.15 should not be interpreted to mean that gloves for proximity fire fighting are suitable or are permitted to be used for protection to the wearer during any hazardous materials operations. It is the intent of this standard to provide protection from intrusion throughout the glove body by certain common liquids.

A-5-3.24 The glove donning performance requirement is intended to evaluate the overall design of the glove for repeated use. Many factors can affect the performance, including proper sizing, glove interior design, wrist opening configuration, choice of lining material, liner pullout, and assembly integrity. The time limits of this test are not necessarily indicative of field use. In particular, purchasers might wish to comparatively test wet (as well as dry) don/doff characteristics before making a final purchase decision.

A-5-4.13 Footwear sole slip resistance measured in wet condition is conducted with water and is not to be construed as providing the same degree of protection from other wet substances.

A-6-1.6.8 A radiant heat test for helmets is specified. Under controlled conditions, a radiant heat load of 1 W/cm^2 is applied until a temperature of 260°C (500°F) is reached on a transducer. This temperature alone does not simulate actual field conditions but is a test devised to put extreme heat loads on helmets in an accurate and reproducible manner by testing laboratories. However, the radiant heat load of 1 W/cm^2 was selected as an average value based on studies of fire conditions that relate to field use.

A-6-13.5.2.4 The convergence of the Meker burners can be checked using a colored piece of flame-resistant material and operating the burners for a few seconds. The pattern of discoloration on the material should appear to be uniform and in the center of the specimen. Any noncircular or nonuniform discoloration should be cause for adjustment of the Meker burners to achieve convergence.

A-6-13.5.3.8 Copper Calorimeter Calibration Procedures. Calibration of the copper calorimeter is based on the following equation:

$$I = 41.84\left(\frac{MC}{KA\varepsilon}\right)\left(\frac{dT}{dt}\right)$$

where:

I = incident heat flux in kW/m^2

41.84 = conversion factor to kW/m^2 from cal·cm^2/sec

$^{dT}/_{dt}$ = rate of temperature rise for the calorimeter indicated by mV/°C

$^{MC}/_{KA\varepsilon}$ = calorimeter's physical constant, which includes the variables A, ε, and M

Copyright National Fire Protection Association
Provided by IHS under license with NFPA
No reproduction or networking permitted without license from IHS
Not for Resale

M = the finished mass (g) of the calorimeter, which includes the copper disk and flat black paint mass on the sensing surface minus the thermocouple mass

C = the heat capacity of pure copper, which is 0.0927 cal/g °C

K = the thermocouple conversion constant (0.053 mv/°C) for the Type J, Iron-Constantan thermocouple at an average test temperature of 65°C

A = the surface area (12.49 cm^2) for the calorimeter's front surface, which is exposed to the test heat flux

ε = the emissivity or absorptivity of the black paint used on the calorimeter's front surface, usually a value not less than 0.95

The physical constant used in calibration calculations with these sensors is sensitive to changes in mass or emissivity values.

For the copper disk calorimeter used in the TPP test, the punched out and drilled copper slug mass must be between 17.5 g and 18.0 g to meet the temperature rise over 10-second rate requirement.

The calorimeter's physical constant can be calculated based on the preceding discussion. The repaired calorimeter's performance can be checked by substituting it with the calibration calorimeter. After proving equivalence, the test calorimeter can be placed back into service.

Copper Calorimeter Repair Procedures. The copper disk can be removed from its support board and checked to ensure that all thermocouple-to-disk connections are securely made. Any loose connections should be repaired. To repair loose connections, the thermocouple data transfer wire should be removed, while leaving the short thermocouple wires extending from the sensor's back side. The sensing surface should be smoothed, cleaned, and repainted with a quality flat black paint of known emissivity and a value no less than 0.95. It may take two or three light coats to completely and evenly cover the surface. After the paint has thoroughly dried, the finished calorimeter should be carefully weighed and its total mass recorded to an accuracy of 0.01 g. The total mass should include the copper disk mass with the short thermocouple wires attached and includes the mass of flat black paint applied to the calorimeter's surface. The calorimeter's finished mass should be determined by subtracting the sensor's thermocouple wire mass from the sensor's total mass. This is accomplished by measuring the sensor's thermocouple wire lengths from their ends down to the calorimeter's back surface. Then the total wire mass should be calculated based on the number of wires and their lengths. This value should then be subtracted from the total mass of the calorimeter assembly to obtain the finished mass. After the finished mass is determined, the data transfer wires should be securely reconnected and the sensor repositioned in its support board.

A-6-18.4.9 Calibration Procedures. The following multiple-step procedure is recommended:

Procedure 1: Medium and System Calibration. This calibration step should be carried out with an accelerometer, as specified in Section 6-19, mounted in the impactor. The accelerometer should be mounted with its sensitive axis within 5 degrees of vertical.

A calibrating medium should be mounted over the load cell, as specified in Section 6-18. The centers of the load cell, medium, impactor, and accelerometer should be colinear within 3 mm (0.125 in.), TIR. The impactor should be dropped from a height that yields a peak force of 9000 N ±500 N (2000 lbf ±110 lbf). A means of verifying the impact velocity within 2 percent should be used. The measured peak force should equal (within 2.5 percent) the measured peak acceleration (in grams) times the weight of the impactor. This accuracy should be repeatable through at least five impacts.

Procedure 2: System Calibration Only. A calibrating medium that has been tested in accordance with the foregoing Procedure 1 can be used without an accelerometer or guided mass. The force value obtained when testing in accordance with Procedure 1 should be recorded and provided with the calibrating medium. The calibrating medium should be mounted over the load cell. The centers of the load cell, medium, impactor, and accelerometer should be colinear within 3 mm (0.125 in.), TIR. The impactor should be dropped onto the medium, and the peak force measured by the load cell should be recorded. The peak force should be within 2.5 percent of that recorded while testing in accordance with Procedure 1. The calibrating medium should be retested in accordance with Procedure 1 at not more than 4-month intervals.

Procedure 3: Electronics Calibration. When in use, electronic calibration of the normally used instrumentation scales should be undertaken at least every six months. This should be accomplished by following the procedures recommended by the manufacturer of the instrumentation.

A-6-19.4.9 Calibration Procedures. The following multiple-step calibration should be used:

Procedure 1: Medium and System Calibration. This calibration step should be carried out using a guided-fall system with an accelerometer mounted in the drop assembly and a load cell mounted under the reference anvil. The load cell should be mounted in compliance with the requirements of 6-18.4.3 through 6-18.4.8. The drop assembly should be dropped onto the reference anvil from a height that yields a peak acceleration of 400 Gn ±20 Gn and accelerations above 200 Gn of at least 1-millisecond duration. A means of verifying the impact velocity within 2 percent should be used. The measured peak performance should equal (within 2 percent) the measured peak acceleration (in grams) times the weight of the drop assembly. This accuracy should be repeatable through at least five impacts.

Procedure 2: Electronics Verification. When in use, electronic verification of the normally used instrumentation scales should be undertaken at least weekly. Verification should be accomplished by following the procedures recommended by the manufacturer of the instrumentation.

A-6-20.4.1.3 This procedure prevents missile tumble, helps to protect the operator if the tube extends to within a short distance of the device being tested, and allows the exact space necessary for insertion of the missile at the top. Partial shielding of the headform might be advisable to protect the operator's feet.

A-6-20.5.1.1 The steel balls move at dangerous speeds, and other forms of safety devices, such as interlocks and palm switches, might be desirable in a particular setup.

A-6-38.4.1 An example of an inner glove fabric is a lightweight, tightly woven medium- or dark-colored, 100-percent polyester fabric without surface treatment.

A-6-43.4.4.2 The test surface specified is identical to the calibration material specified in the cut resistance test found in Section 6-25 (ASTM F 1790, *Standard Test Methods for Measuring Cut Resistance of Materials Used in Protective Clothing*).

A-6-50.5(2) The Gardner pivotal sphere hazemeter is described in ASTM D 1003, *Standard Test Method for Haze and Luminous Transmittance of Transparent Plastics.*

--`,,`-`-`,,`,,`,`,,`---

Copyright National Fire Protection Association
Provided by IHS under license with NFPA
No reproduction or networking permitted without license from IHS
Not for Resale

A-6-51.6 The authority having jurisdiction can request a diagnosis of the mechanism of failure.

A-6-52.4(2) A heavy, flat metal plate with two upright threaded posts, large slotted metal bar, and heavy-duty metal bolts is a preferred means for mounting the mannequin in the spray chamber to prevent any effects of the mannequin mounting on the clothing specimen.

Appendix B Referenced Publications

B-1 The following documents or portions thereof are referenced within this standard for informational purposes only and are thus not considered part of the requirements of this standard unless also listed in Chapter 7. The edition indicated here for each reference is the current edition as of the date of the NFPA issuance of this standard.

B-1.1 NFPA Publication. National Fire Protection Association, 1 Batterymarch Park, P.O. Box 9101, Quincy, MA 02269-9101.

NFPA 1500, *Standard on Fire Department Occupational Safety and Health Program*, 1997 edition.

B-1.2 Other Publications.

B-1.2.1 ASTM Publications. American Society for Testing and Materials, 100 Barr Harbor Drive, West Conshohocken, PA 19428-2959.

ASTM D 1003, *Standard Test Method for Haze and Luminous Transmittance of Transparent Plastics*, 1988.

ASTM F 1790, *Standard Test Methods for Measuring Cut Resistance of Materials Used in Protective Clothing*, 1997.

B-1.2.2 U. S. Government Publication. Superintendent of Documents, U.S. Government Printing Office, Washington, DC 20402.

Title 21, *Code of Federal Regulations*, Part 7, Subpart C, 1 April 1997.

Copyright National Fire Protection Association
Provided by IHS under license with NFPA
No reproduction or networking permitted without license from IHS
Not for Resale

Index

©2000 National Fire Protection Association. All Rights Reserved.

The copyright in this index is separate and distinct from the copyright in the document that it indexes. The licensing provisions set forth for the document are not applicable to this index. This index may not be reproduced in whole or in part by any means without the express written permission of the National Fire Protection Association, Inc.

-A-

Abrasion durability test (labels) 6-47.4.2
Abrasion resistance test (footwear) 5-4.14, 6-26
Acceleration, impact resistance test (helmets) 5-2.10, 6-19, A-6-19.4.9
Accessories
Certification of 2-3.10
Definition 1-3.1, A-1-3.1
Design requirements 4-6
Adhesion after wet flex-tape method 5-1.3, 6-32
Aircraft rescue and fire fighting (definition) 1-3.2
Approved (definition) 1-3.3, A-1-3.3
Arch (definition) 1-3.4
Authority having jurisdiction (definition) 1-3.5, A-1-3.5

-B-

Barrier material (definition) . . . . . 1-3.6, *see also* Moisture barriers; Thermal barriers
Basic plane (definition) 1-3.7
Basic weight (definition) 1-3.8
Biological agents . . . . . *see also* Viral penetration resistance test
Definition 1-3.9
Bitragion coronal arc (definition) 1-3.10, A-1-3.10
Bitragion inion arc (definition) 1-3.11, A-1-3.11
Blood borne pathogens, protection from . . . . . *see* Viral penetration resistance test
Body fluids (definition) . . . . . 1-3.12, *see also* Liquid integrity tests, overall; Viral penetration resistance test
Breaking strength test 6-17
Brim (definition) 1-3.13
Brim line . . . . . 5-2.12(8)
Definition 1-3.14
Burst strength test 5-3.20, 5-5.7, 6-16

-C-

Calibration procedures 6-13.5.2, 6-13.5.3.8, 6-18.4.9, 6-19.4.9, A-6-13.5.2.4, A-6-13.5.3.8, A-6-18.4.9, A-6-19.4.9
Cargo pockets 4-1.11, A-4-1.11
Definition 1-3.15
Certification organization . . . 2-1.2, 2-1.4 to 2-1.7, 2-2, A-2-1.4, A-2-2.1
Contract with manufacturers 2-2.3, A-2-2.3
Definition 1-3.17
Testing program . . . . . *see* Testing and inspection
Certification/certified . . . . . Chap. 2, A-2
Definition 1-3.16
Recertification . . . . . 2-3.1 to 2-3.3, 2-4
Testing and inspection . . . . . *see* Testing and inspection
Char (definition) 1-3.18
Chin strap . . . . . 4-2.4, 5-2.12(5)
Definition 1-3.19
Cleaning . . . . . 3-2.4(6)
Cleaning shrinkage resistance test 5-5.5, 6-27
Closures . . . . . *see also* Hardware
Chin strap . . . . . 5-2.12(5)
Coats 4-1.14.3
Garment . . . . . 4-1.3, 4-1.5 to 4-1.11, A-4-1.3, A-4-1.11
Coat . . . . . *see* Proximity protective coat
Collar 4-1.14.3
Definition 1-3.21
Collar lining
Definition 1-3.22
Flame resistance 5-1.8
Heat resistance . . . . . 5-1.9 to 5-1.10, 5-1.12, 6-6.8.5
Shrinkage, resistance to 5-1.21
Tear resistance 5-1.15
Compliance/compliant (definition) 1-3.23
Components
Certification inspection and testing 2-3.1
Definition 1-3.24
Composite (definition) 1-3.25
Compression and impact tests (footwear) 5-4.16, 6-21
Compressive heat resistance . . . . . *see* Conductive and compressive heat resistance test
Conductive and compressive heat resistance test 5-1.22, 6-12
Conductive heat resistance tests
Test One 5-3.10, 5-4.3, 6-7
Test Two 5-4.4, 6-8
Convective heat, sample conditioning procedures 6-1.5
Copper calorimeters, calibration procedures 6-13.5.2, 6-13.5.3.8, A-6-13.5.2.4, A-6-13.5.3.8
Coronal plane 4-2.7.2
Definition 1-3.26
Corrosion resistance test 5-1.23, 5-2.21, 5-4.19, 6-35
Crown (definition) 1-3.28
Crown straps (definition) 1-3.29
Cut resistance test . . . . . 5-3.16 to 5-3.17, 5-4.12, 6-25

-D-

Definitions 1-3, A-1-3
Design requirements . . . . . 2-3.8, Chap. 4, A-4
Accessories 4-6
Footwear 4-4, A-4-4.8.2
Garments 4-1, A-4-1
Gloves 4-3, A-4-3.7.3
Helmets 4-2
Wristlet interface component 4-5
Dielectric test plane (definition) 1-3.30
Documentation, inspection and test data 2-3.13
Donning and doffing procedures . . . . . 3-2.4(4)
Drip (definition) 1-3.31

Copyright National Fire Protection Association
Provided by IHS under license with NFPA
No reproduction or networking permitted without license from IHS
Not for Resale

-E-

Ear covers, heat resistance . . . . . 5-2.12(4)
Electrical insulation tests
Test One 5-2.14, 6-36
Test Two 5-4.15, 6-37
Electricity, resistance to
Footwear 5-4.15, 6-37.1
Helmets 5-2.14, 6-36.1
Elements
Certification inspection and testing 2-3.1
Definition 1-3.32
Product labels 3-1.1, A-3-1.1
Energy absorbing system (helmet) . . . . . 4-2.2 to 4-2.3, 5-2.12(4)
Definition 1-3.33
Entry fire fighting (definition) 1-3.35, A-1-3.35
Eye/face positioning index 4-2.5
Definition 1-3.36
Eyelet and stud post attachment test 5-4.18, 6-53

-F-

Faceshield . . . . . 4-2.2, 4-2.5, 5-2.12(8) to (9)
Definition 1-3.37
Flame resistance 5-2.25, 6-2.1.1, 6-3.1
Hardware, corrosion resistance of 6-35.1.1, 6-35.8
Impact resistance test 5-2.24, 6-20, A-6-20.5.1.1, A-6-29.4.1.3
Test One, high mass impact 6-20.4, A-6-20.4.1.3
Test Two, high velocity impact 6-20.5, A-6-20.5.1.1
Light transmittance test 5-2.26, 6-50.1
Radiant reflective requirements 5-2.27, 6-10.1.1
Samples
Room temperature conditioning procedure 6-1.3.2
Wet conditioning procedure 6-1.7
Flame resistance
Definition 1-3.38
Inherent (definition) 1-3.59
Flame resistance tests
Test One 5-1.8, 5-2.18, 5-3.12, 5-5.2, 6-2
Test Two 5-2.13, 5-2.25, 6-3
Test Three 5-3.11, 6-4
Test Four 5-4.5, 6-5
Flex at low temperature 5-1.4, 5-2.4, 5-3.4, 6-33
Flexing procedure for gloves 6-1.10
Follow-up programs 2-2.7, A-2-2.7
Definition 1-3.39
Footwear . . . . . *see* Proximity protective footwear
Functional (definition) 1-3.41

-G-

Garment . . . . . *see* Proximity protective garment
Gauntlet . . . . . 4-3.4, 5-3.1 to 5-3.5, 5-3.7, 5-3.12, 5-3.17, 6-2.1.1, 6-13.10, 6-25.1.2, 6-25.7
Definition 1-3.43
Glove . . . . . *see* Proximity protective glove
Glove body
Definition 1-3.44
Design requirements 4-3.3, 4-3.6
Performance requirements . . . . . 5-3.6, 5-3.9 to 5-3.11, 5-3.18
Test methods 6-25.1.2, 6-25.7
Glove hand function test 5-3.19, 6-43, A-6-43.4.4.2
Glove liner
Definition 1-3.45
Heat resistance . . . . . 6-6.1.1 to 6-6.1.2, 6-6.2.1, 6-6.8
Glove wristlet . . . . 4-3.4, 5-3.7, 5-3.12 to 5-3.13, 5-3.17, 6-25.1.2, 6-25.7
Definition 1-3.46
Knit . . . . . 5-3.20 to 5-3.21
Grip test (gloves) 5-3.22, 6-44

-H-

Hardware
Coat 4-1.14.4
Corrosion resistance test 6-35.1
Definition 1-3.48
Footwear . . . . . 4-4.6 to 4-4.7, 5-4.18 to 5-4.19, 6-53.1
Garment 4-1.10, 5-1.13, 5-1.23, 6-6.1.1, 6-6.1.5, 6-6.2.1, 6-35.1.1, 6-35.7
Heat and thermal shrinkage resistance . . . . 6-6.1.1, 6-6.11 to 6-6.12
Helmet 5-2.21
Trousers 4-1.15.2
Hazardous chemicals (definition) 1-3.49
Hazardous materials emergencies (definition) 1-3.50
Headband (definition) 1-3.51
Headform . . . . . 4-2.7.2, 6-19.4.1 to 6-19.4.2
Alderson 50-percentile male 4-2.5, 6-20.4.1.1
Definition 1-3.52
ISEA Standard 6-18.4.1
Heat and thermal shrinkage resistance test . . . . . 6-6, *see also* Conductive heat resistance tests
Footwear 5-4.1
Garment . . . . . 5-1.9 to 5-1.10
Glove . . . . . 5-3.8 to 5-3.9
Helmet 5-2.12, 5-2.19
Wristlet . . . . . 5-5.3 to 5-5.4
Heat durability test (labels) 6-47.4.3
Helmet . . . . . *see* Proximity protective helmet
Helmet outer cover
Adhesion durability 5-2.3
Blocking durability 5-2.5
Definition 1-3.54
Delamination, resistance to 5-2.2
Design requirements . . . . . 4-2.2.1 to 4-2.2.2, 4-2.8
Flame resistance 6-2.1.1
Flex durability 5-2.4
Heat resistance 6-6.1.1, 6-6.8
Proximity protective footwear 6-10.1.1
Radiant reflective requirements 5-2.1
Tear resistance 5-2.8, 6-15.1
Helmet positioning index 4-2.6
Definition 1-3.55
Helmet shroud . . . . . Table 2-3.4.2
Adhesion durability 5-2.3
Blocking durability 5-2.5
Certification 2-3.4.2
Conditioning . . . . . Table 2-3.4.2
Definition 1-3.56
Delamination, resistance to 5-2.2
Design requirements 4-2.2, 4-2.7
Face openings 6-51.1.1
Elastic or manually adjusted 6-51.4
SCBA facepiece interface 6-51.1.1, 6-51.5
Flame resistance 6-2.1.1
Flex durability 5-2.4

Copyright National Fire Protection Association
Provided by IHS under license with NFPA
No reproduction or networking permitted without license from IHS
Not for Resale

Heat resistance . . . . . 6-6.1.1 to 6-6.1.2, 6-6.8
Opening size retention test 6-51, A-6-51.6
Proximity protective footwear 6-10.1.1
Radiant reflective requirements 5-2.1
Tear resistance 5-2.7, 6-15.1
Thermal insulation . . . . . 6-13.1.1 to 6-13.1.2, 6-13.8
Thermal insulation, test for 5-2.6
High-temperature blocking, resistance to 5-1.5, 5-2.5, 5-3.5, 6-34
Hood . . . . . *see* Proximity protective hood
Horizontal center plane (definition) 1-3.58
Human tissue burn overlay, preparation of 6-13.5.4

-I-

Impact tests
Footwear impact and compression tests 5-4.16, 6-21
Helmet
Faceshield component impact resistance test 5-2.24, 6-20, A-6-20.5.1.1
Impact resistance test (acceleration) 5-2.10, 6-19, A-6-19.4.9
Top impact resistance test (force) 5-2.9, 6-18, 6-18.4.9
Inherent flame resistant (definition) 1-3.59
Insole 4-4.2
Definition 1-3.60
Inspection . . . . . *see* Testing and inspection
Interface area (definition) 1-3.61
Interface components
Certification of 2-3.4.2
Definition 1-3.62
Wristlet . . . . . *see* Wristlet and wristlet interface components
ISO registration for manufacturers 2-6

-K-

Knit materials
Burst strength test 6-16
Flame resistance test 6-2.1.3, 6-2.9
Glove wristlets . . . . . 5-3.20 to 5-3.21
Seam assemblies 5-1.17
Shrinkage resistance test 6-27.1.3, 6-27.8
Wristlets . . . . . 5-3.20 to 5-3.21, 5-5.7 to 5-5.8

-L-

Label durability and legibility tests
Test One 5-1.24, 5-3.25, 5-4.20, 6-47
Test Two 5-2.22, 6-48
Labeled . . . . . 2-1.3 to 2-1.4, 2-1.6 to 2-1.7, 2-2.11, 3-1.3, 3-1.6, A-2-1.4, A-3-1.3, *see also* Product labels
Definition 1-3.63
Ladder shank 4-4.2
Bend resistance test 5-4.17, 6-45
Corrosion resistance 5-4.19
Definition 1-3.64
Laundering durability test (labels) 6-47.4.1
Lettering, heat resistance 5-1.10
Liner retention test (gloves) 5-3.24, 6-42, A-5-3.24
Liquid borne pathogens . . . . . *see also* Viral penetration resistance test
Definition 1-3.65
Liquid integrity tests, overall
Test One 5-3.23, 6-38, A-5-3.23, A-6-38.4.1
Test Two 5-4.7, 6-39
Liquid penetration resistance tests 5-1.7, 5-1.19, 5-3.15, 5-4.8, 6-29, 6-53, A-5-3.15
Viral penetration 5-1.20, 5-3.14, 5-4.9, 6-30, A-5-3.14
Water penetration 5-1.18, 6-28
Whole garment . . . . . 6-52, A-6-52.4(2)
Listed 2-1.3
Definition 1-3.66, A-1-3.66
Low temperature environmental sample conditioning procedure 6-1.4
Lower torso (definition) 1-3.67
Luminous (visible) transmittance test . . . . . 5-2.26, 6-50, A-6-50.5(2)

-M-

Maintenance . . . . . 3-2.4(6)
Major A seams . . . . . *see* Seams
Major B seams . . . . . *see* Seams
Major seams . . . . . *see* Seams
Manufacturers
Certification inspection and testing 2-3.3, 2-3.13
Contract with certification organization 2-2.3, A-2-2.3
Definition 1-3.70
Helmet part number 3-1.9
ISO registration for 2-6
Quality assurance program 2-5
Measurement, units of 1-4
Melt (definition) 1-3.71
Midsagittal plane 4-2.7.2
Definition 1-3.72
Minor seams . . . . . *see* Seams
Model (definition) 1-3.74
Model weight (definition) 1-3.75
Modifications, testing of . . . . . 2-3.11 to 2-3.12, *see also* Recertification
Moisture barriers
Convective heat conditioning of samples 6-1.5
Definition 1-3.76
Design requirements . . . . . 4-1.2 to 4-1.5, 4-1.14.3 to 4-1.14.4, 4-1.15.2, A-4-1.2 to A-4-1.3
Material
Flame resistance 5-1.8
Heat resistance . . . . . 5-1.9 to 5-1.10, 6-6.1.2, 6-6.2.2, 6-6.8
Liquids, resistance to . . . . . 5-1.18 to 5-1.20, 6-28.1.1 to 6-28.1.2, 6-28.7, 6-29.7, 6-30.1.1 to 6-30.1.2, 6-30.7
Shrinkage, resistance to 5-1.21, 6-27.1.1
Tear resistance 5-1.16
Thermal protective performance 5-1.6, 5-2.6
Seams
Heat resistance 5-1.11, 6-6.1.1, 6-6.1.3, 6-6.2.1, 6-6.9
Liquids, resistance to . . . . . 5-1.19 to 5-1.20, 6-28.1.1, 6-28.1.3, 6-28.8, 6-30.1.1, 6-30.1.3, 6-30.8

-N-

Nape devices 4-2.4
Definition 1-3.77
Nonwoven textile materials, flame resistance testing . . 6-2.1.4, 6-2.10

-O-

Outer cover . . . . . *see* Helmet outer cover
Outer shell (garment)
Adhesion durability 5-1.3
Blocking durability 5-1.5
Definition 1-3.79
Delamination, resistance to 5-1.2
Design requirements . . . . . 4-1.2, 4-1.12 to 4-1.13, 4-1.14.4, 4-1.15.2, A-4-1.2

Copyright National Fire Protection Association
Provided by IHS under license with NFPA
No reproduction or networking permitted without license from IHS
Not for Resale

Flame resistance 5-1.8
Flex durability 5-1.4
Heat resistance . . . . . .5-1.9 to 5-1.10, 5-1.12, 6-6.1.2, 6-6.2.2, 6-6.8
Radiant reflective requirements . . . . . .5-1.1, 6-10.1.1 to 6-10.1.2, 6-10.8
Shrinkage, resistance to 6-27.1.1
Tear resistance. 5-1.15
Thermal protective performance 5-1.6, 5-2.6

-P-

Penetration, resistance to . . . . . *see also* Liquid penetration resistance tests; Puncture resistance tests; Viral penetration resistance test
Physical penetration, helmet 5-2.11, 6-22
Water penetration. 5-1.18, 6-28
Performance requirements . . . . . 2-3.9, Chap. 5, A-5
Footwear 5-4, A-5-4.13
Garments. 5-1, A-5-1.19
Gloves 5-3, A-5-3
Helmets 5-2
Wristlet interface component 5-5
Physical penetration resistance test . . . . . 5-2.11, 6-22, *see also* Puncture resistance tests
Product (definition) 1-3.80
Product labels . . . . . 2-1.3 to 2-1.4, 2-1.7, 2-3.5 to 2-3.6, 3-1, A-2-1.4, A-3-1.1, A-3-1.3, *see also* Label durability and legibility tests; Labeled
Convective heat conditioning of samples 6-1.5
Definition 1-3.81
Flame resistance 5-1.8.1
Footwear 5-4.20
Garment 5-1.8.1, 5-1.10, 5-1.24
Glove 5-3.25
Heat and thermal shrinkage resistance. 5-1.10, 6-6.1.1, 6-6.1.4, 6-6.2.1
Helmet. . . . . .5-2.12(7), 5-2.22
Protective clothing . . . . . *see* Proximity protective ensemble
Protective footwear . . . . . *see* Proximity protective footwear
Protective glove . . . . . *see* Glove
Protective helmet . . . . . *see* Helmet
Protective wristlet . . . . *see* Wristlet and wristlet interface components
Proximity fire fighting (definition) 1-3.84, A-1-3.84
Proximity protective clothing . . . . .*see* Proximity protective ensemble
Proximity protective coat
Definition 1-3.86
Design requirements . . . . . 4-1.1 to 4-1.14, A-4-1
Liquid penetration, resistance to. 6-52.8, 6-52.10
Sizing . . . . . 4-1.14.5 to 4-1.14.6, A-4-1.14.5
Proximity protective coverall . . . . . *see also* Proximity protective garment
Definition 1-3.27, 1-3.87
Design requirements . . . . . 4-1.1 to 4-1.13, 4-1.16, A-4-1
Liquid penetration, resistance to. 6-52.10
Proximity protective ensemble
Definition 1-3.88
Labels. 3-1, A-3-1.1, A-3-1.3
User information 3-2, A-3-2
Proximity protective footwear . . . . . *see also* Ladder shank
Abrasion resistance. 5-4.14, 6-26.1
Cut resistance 5-4.12, 6-25.1, 6-25.8
Definition 1-3.40, 1-3.89, A-1-3.89
Design requirements 4-4, A-4-4.8.2
Electricity, resistance to 5-4.15, 6-37.1
Flame resistance. 5-4.5, 6-5.1
Hardware . . . . . .5-4.18 to 5-4.19, 6-35.1.1, 6-35.9, 6-53.1
Heat resistance. . . . . .5-4.1 to 5-4.4, 6-6.1.1, 6-6.1.8, 6-6.2.1 to 6-2.2.2, 6-6.14, 6-7.1.1, 6-7.8, 6-8.1, 6-9.1
Impact and compression, resistance to 5-4.16, 6-21.1
Labels 5-4.20, 6-47.1.1, 6-47.9
Leakage, resistance to 6-39.1
Liquids, resistance to. . . . . 5-4.7 to 5-4.9, 6-29.1.1, 6-29.1.4, 6-29.9, 6-30.1.1, 6-30.1.5, 6-30.10
Performance requirements. 5-4, A-5-4.13
Puncture resistance 5-4.10, 5-4.11, 6-23.1, 6-23.8, 6-24.1
Radiant reflective requirements 6-10.1.1, 6-10.1.3, 6-10.9
Samples
Convective heat conditioning procedure 6-1.5
Room temperature conditioning procedure. 6-1.3.1
Wet conditioning procedure 6-1.9
Sewing thread 5-4.6
Sizing 3-2.6, 4-4.8, A-3-2.6, A-4-4.8.2
Slip resistance. 5-4.13, 6-46.1, A-5-4.13
Thermal insulation . . . . . .5-4.2 to 5-4.4, 6-7.1.1, 6-7.8, 6-8.1, 6-9.1
Proximity protective garment . . . . . .*see also* Moisture barriers; Outer shell
Definition 1-3.90
Design requirements 4-1, A-4-1
Flame resistance. 5-1.8, 6-2.1.1
Hardware . . . . . *see* Hardware
Heat resistance. . . . . 5-1.9 to 5-1.13, 6-6.1.1 to 6-6.1.5, 6-6.2.1
Conductive and compressive heat resistance 5-1.22, 6-12
Labels 5-1.8.1, 5-1.10, 5-1.24, 6-47.1.1, 6-47.7
Liquid penetration, resistance to . . . . . .5-1.7, 5-1.18 to 5-1.20, 6-29.1.1 to 6-29.1.2, 6-30.1.1, 6-52.1.1
Performance requirements. 5-1, A-5-1.19
Samples
Room temperature conditioning procedure. 6-1.3.1
Washing and drying procedures. 6-1.2
Sewing thread 5-1.14
Strength 5-1.17, 6-16.1, 6-17
Tear resistance . . . . . 5-1.15 to 5-1.16, 6-15.1
Thermal insulation, test for . . . . . 5-1.6, 6-13.1.1 to 6-13.1.2, 6-13.8
Proximity protective glove . . . . . *see also* Gauntlet; Glove body; Glove liner; Glove wristlet
Adhesion durability 5-3.3
Blocking durability 5-3.5
Cut resistance. . . . . 5-3.16 to 5-3.17, 6-25.1, 6-25.7
Definition 1-3.91
Delamination, resistance to. 5-3.2
Design requirements 4-3, A-4-3.7.3
Donning, ease of 5-3.24, 6-42.1, A-5-3.24
Flame resistance. . . . . 5-3.11 to 5-3.12, 6-4.1
Flex durability 5-3.4
Flexing procedures for 6-1.10
Grip test 5-3.22, 6-44.1
Hand dimension ranges 3-2.5
Hand function 5-3.19, 6-43.1
Hardware 6-35.1.1, 6-35.7
Heat resistance. . . . . .5-3.8 to 5-3.9, 6-6.1.1 to 6-6.1.2, 6-6.1.7, 6-6.2.2, 6-6.13, 6-7.1.1, 6-7.7
Labels 5-3.25, 6-47.1.1, 6-47.8
Leakage, resistance to 5-3.23, 6-38.1, A-5-3.23
Liquids, resistance to . . . . . 5-3.14 to 5-3.15, 6-29.1.1,

Copyright National Fire Protection Association
Provided by IHS under license with NFPA
No reproduction or networking permitted without license from IHS
Not for Resale

6-29.1.3, 6-29.8, 6-30.1.1, 6-30.1.4, 6-30.9, A-5-3.14 to A-5-3.15
Performance requirements 5-3, A-5-3
Puncture resistance 5-3.18, 6-23.1, 6-23.7
Radiant reflective requirements . . . . . .5-3.1, 6-10.1.1 to 6-10.1.2, 6-10.8
Samples
Convective heat conditioning procedure 6-1.5
Room temperature conditioning procedure 6-1.3.1
Washing and drying procedures 6-1.2
Wet conditioning procedure 6-1.8, A-6-1.8
Sewing thread 5-3.13
Sizing 4-3.7, A-4-3.7.3
Thermal insulation, tests for . . . . . 5-3.6 to 5-3.7, 5-3.10, 6-7.1.1, 6-7.7, 6-13.1.1, 6-13.1.4, 6-13.10
Proximity protective helmet . . . . . .*see also* Retention systems; Shell
Certification of 2-3.4.1
Definition 1-3.92
Design requirements 4-2
Electricity, resistance to 5-2.14, 6-36.1
Flame resistance 5-2.13, 6-3.1
Hardware. 5-2.21, 6-35.1.1, 6-35.8
Heat resistance 5-2.12, 5-2.19, 6-6.1.1, 6-6.1.6, 6-6.2.1
Impact resistance . . . . . .5-2.9 to 5-2.10, 6-18, 6-18.4.9, 6-19.1
Labels 5-2.22, 6-48.1
Manufacturer's part number 3-1.9
Performance requirements 5-2
Physical penetration, resistance to 5-2.11, 6-22.1
Radiant reflective requirements 5-2.23, 6-10.1.1
Samples
Convective heat conditioning procedure 6-1.5
Low temperature environmental conditioning procedure. 6-1.4
Radiant heat environmental sample conditioning procedure. 6-1.6, A-6-1.6.8
Room temperature conditioning procedure 6-1.3.2
Wet conditioning procedure 6-1.7
Self-contained breathing apparatus (SCBA) attached to. 4-2.7
Sewing thread 5-2.20
Suspension systems, retention ability 5-2.16, 6-41.1
Proximity protective hood (definition) 1-3.93
Proximity protective trousers
Definition 1-3.94
Design requirements . . . . . 4-1.1 to 4-1.13, 4-1.15, A-4-1, A-4-1.15.1
Liquid penetration, resistance to . . . . . .6-52.9 to 6-52.10
Sizing . . . . . .4-1.15.3 to 4-1.15.4
Puncture resistance tests
Test One 5-3.18, 5-4.10, 6-23
Test Two. 5-4.11, 6-24
Puncture-resistant devices 4-4.2, 4-4.5
Corrosion resistance. 5-4.19
Definition 1-3.95
Purpose of standard 1-2, A-1-2

-Q-

Quality assurance program 2-5

-R-

Radiant heat environmental sample conditioning procedure. 6-1.6, A-6-1.6.8
Radiant heat resistance test one. 5-4.2, 6-9
Radiant reflective tests
Radiant Heat Transmittance Test Three 6-11
Radiant transmittance heat test 5-2.23
Test Two 5-1.1, 5-2.1, 5-2.27, 5-3.1, 6-10
Radiological agents (definition) 1-3.96
Recall system 2-2.9, 2-5.1, A-2-2.9
Definition 1-3.97
Recertification . . . . . .2-3.1 to 2-3.3, 2-3.11, 2-4
Reference plane. 4-2.7.2
Definition 1-3.98
Referenced publications . . . . . .Chap. 7, App. B
Retention systems (helmet). . . . . 4-2.2, 4-2.3 to 4-2.4
Definition 1-3.99
Heat resistance. . . . . 5-2.12(4)
Test of retention ability 5-2.15, 6-40, 6-49
Room temperature sample conditioning procedure . . . . . 6-1.3, Table 2-3.4.2

-S-

Samples. . . . . .*see also* Specimens
Definition 1-3.100
Preparation procedures . . . . . .6-1, A-6-1.6.8, A-6-1.8, s*ee also* Specific tests
SCBA facepiece interface 6-51.1.1, 6-51.5
Scope of standard 1-1, A-1-1
Seam assemblies
Definition 1-3.102
Strength test. 5-1.17
Seams
Breaking strength test 5-3.21, 5-5.8, 6-17
Definition 1-3.101
Glove . . . . . 5-3.14 to 5-3.15, 5-3.21, A-5-3.14 to A-5-3.15
Liquids, resistance to. . . . . 5-3.14 to 5-3.15, A-5-3.14 to A-5-3.15
Major A. 5-1.17.1
Definition. 1-3.103
Major B. 5-1.17.1
Definition. 1-3.104
Minor 5-1.17.1
Definition. 1-3.105
Moisture barrier . . . . . .*see* Moisture barriers
Wristlet 5-5.8
Self-contained breathing apparatus (SCBA) . . . . . 4-2.7, 4-2.7.3 to 4-2.7.4, 4-2.10
Separate (definition) 1-3.106
Shall (definition) 1-3.107
Shank (definition) . . . . . 1-3.108, *see also* Ladder shank
Shell . . . . . *see also* Outer shell
Definition 1-3.109
Helmet
Design requirements. 4-2.2, 4-2.3
Heat resistance . . . . . .5-2.12(2) to (3)
Retention test 5-2.17, 6-49
Radiant heat transmittance tests. 6-11.1
Should (definition) 1-3.110
Shrinkage resistance test 5-1.21
Shroud . . . . . *see* Helmet shroud
Slip resistance test (footwear). 5-4.13, 6-46, A-5-4.13
Specimens. . . . . *see also* Samples; Specific tests
Definition 1-3.112
Small, testing of 6-2.1.5, 6-2.11
Use in multiple tests 2-3.12
Standard (definition) 1-3.113

--`,,`-`-`,,`,,`,`,,`---

Copyright National Fire Protection Association
Provided by IHS under license with NFPA
No reproduction or networking permitted without license from IHS
Not for Resale

Stretch woven textile materials 5-1.17.3, 6-27.1.3, 6-27.8
Structural fire fighting (definition) 1-3.114
Suspension (definition) 1-3.115
Suspension system retention test 6-41
Suspension system retention test (helmet) 5-2.16
Sweatband (definition) 1-3.116

-T-

Tear resistance test . . . . . 5-1.15 to 5-1.16, 5-2.7 to 5-2.8, 6-15
Testing and inspection . . . . . *see also* Specific tests, e.g. Flame resistance test
For certification . . . . . 2-2.4 to 2-2.5, 2-3, A-2-2.4
Follow-up 2-2.7, A-2-2.7
Methods . . . . . Chap. 6, A-6
Modified products . . . . . 2-3.11 to 2-3.12
Quality assurance program 2-5
Records 2-3.13
Sample preparation procedures 6-1, A-6-1.6.8, A-6-1.8
Textile fabric . . . . . *see also* Knit materials; Woven textile materials
Definition 1-3.117
Nonwoven textile materials, flame resistance testing 6-2.1.4, 6-2.10
Thermal barriers
Definition 1-3.118
Design requirements . . . . . 4-1.2 to 4-1.5, 4-1.14.2 to 4-1.14.4, 4-1.15.2, A-4-1.2 to A-4-1.3, A-4-1.14.2
Flame resistance 5-1.8
Heat resistance . . . . . 5-1.9 to 5-1.10, 6-6.1.2, 6-6.2.2, 6-6.8
Shrinkage, resistance to 5-1.21, 6-27.1.1
Tear resistance 5-1.16
Thermal protective performance . . . . . *see* Thermal protective performance (TPP) test
Thermal insulation
Footwear . . . . . 5-4.2 to 5-4.4
Glove . . . . . 5-3.6 to 5-3.7, 5-3.10
Tests of . . . . . 6-7 to 6-9
Wristlet 5-5.1
Thermal protective performance (TPP) test 5-2.6, 6-13, A-6-13.5.2.4, A-6-13.5.3.8
Garments 5-1.6
Gloves . . . . . 5-3.6 to 5-3.7
Helmet shroud 5-2.6
Wristlets 5-5.1
Thread melting test 6-14
Footwear 5-4.6
Garment 5-1.14
Glove 5-3.13
Helmet 5-2.20
Wristlet 5-5.6
Toecap 4-4.2
Corrosion resistance 5-4.19
Definition 1-3.119
Top (definition) 1-3.120
Top impact resistance test (force) (helmets) 5-2.9, 6-18, 6-18.4.9
Top line (definition) 1-3.121
Trim, helmet and helmet outer cover 4-2.8
Trousers . . . . . *see* Proximity protective trousers

-U-

Upper 4-4.2
Cut resistance 6-25.1.1, 6-25.1.3, 6-25.8
Definition . . . . . 1-3.123, *see also* Proximity protective footwear
Puncture resistance 6-23.1, 6-23.8
Upper torso (definition) 1-3.124
User information 2-3.7, 3-2, A-3-2

-V-

Viral penetration resistance test . . . 5-1.20, 5-3.14, 5-4.9, 6-30, A-5-3.14

-W-

Washing and drying procedures, samples 6-1.2
Water penetration resistance test 6-28
Wear surface (definition) 1-3.125
Wet conditioning sample procedure . . . . . 6-1.7 to 6-1.9, A-6-1.8
Wet flex . . . . . 5-1.2, 5-2.2 to 5-2.3, 5-3.2 to 5-3.3, 6-31
Wildland fire fighting (definition) 1-3.126
Winter liner
Definition 1-3.127
Flame resistance 5-1.8
Heat resistance . . . . . 5-1.9 to 5-1.10, 6-6.1.2, 6-6.2.2, 6-6.8
Shrinkage, resistance to 5-1.21, 6-27.1.1
Tear resistance 5-1.16
Woven textile materials
Flame resistance test 6-2.1.2, 6-2.8
Seam assemblies, strength of 5-1.17, 6-15
Shrinkage resistance test . . . . . 6-27.1.2, 6-27.7 to 6-27.8
Wristlet and wristlet interface components
Certification 2-3.4.2
Coat 4-1.14.2, A-4-1.14.2
Conditioning . . . . . Table 2-3.4.2
Definition 1-3.128
Design requirements 4-5
Flame resistance 5-5.2, 6-2.1.1
Glove . . . . . *see* Glove wristlet
Heat resistance . . . . . 5-5.3 to 5-5.4, 6-6.1.1
Performance requirements 5-5
Sewing thread 5-5.6
Shrinkage, resistance to 5-5.5, 6-27.1.1
Strength . . . . . 5-5.7 to 5-5.8, 6-16.1
Tests . . . . . Table 2-3.4.2
Thermal insulation 5-5.1, 6-13.1.1, 6-13.1.3, 6-13.9
Washing and drying of samples 6-1.2

Copyright National Fire Protection Association
Provided by IHS under license with NFPA
No reproduction or networking permitted without license from IHS
Not for Resale