NFPA 1971

Standard on Protective Ensembles for Structural Fire Fighting and Proximity Fire Fighting

2007 Edition

NFPA, 1 Batterymarch Park, Quincy, MA 02169-7471
An International Codes and Standards Organization

Copyright National Fire Protection Association
Provided by IHS under license with NFPA
No reproduction or networking permitted without license from IHS

Not for Resale

IMPORTANT NOTICES AND DISCLAIMERS CONCERNING NFPA DOCUMENTS

NOTICE AND DISCLAIMER OF LIABILITY CONCERNING THE USE OF NFPA DOCUMENTS

NFPA codes, standards, recommended practices, and guides, of which the document contained herein is one, are developed through a consensus standards development process approved by the American National Standards Institute. This process brings together volunteers representing varied viewpoints and interests to achieve consensus on fire and other safety issues. While the NFPA administers the process and establishes rules to promote fairness in the development of consensus, it does not independently test, evaluate, or verify the accuracy of any information or the soundness of any judgments contained in its codes and standards.

The NFPA disclaims liability for any personal injury, property or other damages of any nature whatsoever, whether special, indirect, consequential or compensatory, directly or indirectly resulting from the publication, use of, or reliance on this document. The NFPA also makes no guaranty or warranty as to the accuracy or completeness of any information published herein.

In issuing and making this document available, the NFPA is not undertaking to render professional or other services for or on behalf of any person or entity. Nor is the NFPA undertaking to perform any duty owed by any person or entity to someone else. Anyone using this document should rely on his or her own independent judgment or, as appropriate, seek the advice of a competent professional in determining the exercise of reasonable care in any given circumstances.

The NFPA has no power, nor does it undertake, to police or enforce compliance with the contents of this document. Nor does the NFPA list, certify, test or inspect products, designs, or installations for compliance with this document. Any certification or other statement of compliance with the requirements of this document shall not be attributable to the NFPA and is solely the responsibility of the certifier or maker of the statement.

Copyright National Fire Protection Association
Provided by IHS under license with NFPA
No reproduction or networking permitted without license from IHS
Not for Resale

ADDITIONAL NOTICES AND DISCLAIMERS

Updating of NFPA Documents

Users of NFPA codes, standards, recommended practices, and guides should be aware that these documents may be superseded at any time by the issuance of new editions or may be amended from time to time through the issuance of Tentative Interim Amendments. An official NFPA document at any point in time consists of the current edition of the document together with any Tentative Interim Amendments and any Errata then in effect. In order to determine whether a given document is the current edition and whether it has been amended through the issuance of Tentative Interim Amendments or corrected through the issuance of Errata, consult appropriate NFPA publications such as the National Fire Codes® Subscription Service, visit the NFPA website at www.nfpa.org, or contact the NFPA at the address listed below.

Interpretations of NFPA Documents

A statement, written or oral, that is not processed in accordance with Section 6 of the Regulations Governing Committee Projects shall not be considered the official position of NFPA or any of its Committees and shall not be considered to be, nor be relied upon as, a Formal Interpretation.

Patents

The NFPA does not take any position with respect to the validity of any patent rights asserted in connection with any items which are mentioned in or are the subject of NFPA codes, standards, recommended practices, and guides, and the NFPA disclaims liability for the infringement of any patent resulting from the use of or reliance on these documents. Users of these documents are expressly advised that determination of the validity of any such patent rights, and the risk of infringement of such rights, is entirely their own responsibility.

NFPA adheres to applicable policies of the American National Standards Institute with respect to patents. For further information contact the NFPA at the address listed below.

Law and Regulations

Users of these documents should consult applicable federal, state, and local laws and regulations. NFPA does not, by the publication of its codes, standards, recommended practices, and guides, intend to urge action that is not in compliance with applicable laws, and these documents may not be construed as doing so.

Copyrights

This document is copyrighted by the NFPA. It is made available for a wide variety of both public and private uses. These include both use, by reference, in laws and regulations, and use in private self-regulation, standardization, and the promotion of safe practices and methods. By making this document available for use and adoption by public authorities and private users, the NFPA does not waive any rights in copyright to this document.

Use of NFPA documents for regulatory purposes should be accomplished through adoption by reference. The term "adoption by reference" means the citing of title, edition, and publishing information only. Any deletions, additions, and changes desired by the adopting authority should be noted separately in the adopting instrument. In order to assist NFPA in following the uses made of its documents, adopting authorities are requested to notify the NFPA (Attention: Secretary, Standards Council) in writing of such use. For technical assistance and questions concerning adoption of NFPA documents, contact NFPA at the address below.

For Further Information

All questions or other communications relating to NFPA codes, standards, recommended practices, and guides and all requests for information on NFPA procedures governing its codes and standards development process, including information on the procedures for requesting Formal Interpretations, for proposing Tentative Interim Amendments, and for proposing revisions to NFPA documents during regular revision cycles, should be sent to NFPA headquarters, addressed to the attention of the Secretary, Standards Council, NFPA, 1 Batterymarch Park, P.O. Box 9101, Quincy, MA 02269-9101.

For more information about NFPA, visit the NFPA website at www.nfpa.org.

Copyright National Fire Protection Association
Provided by IHS under license with NFPA
No reproduction or networking permitted without license from IHS
Not for Resale

Copyright © 2006 National Fire Protection Association. All Rights Reserved.

NFPA 1971

Standard on

Protective Ensembles for Structural Fire Fighting and Proximity Fire Fighting

2007 Edition

This edition of NFPA 1971, *Standard on Protective Ensembles for Structural Fire Fighting and Proximity Fire Fighting*, was prepared by the Technical Committee on Structural and Proximity Fire Fighting Protective Clothing and Equipment and released by the Technical Correlating Committee on Fire and Emergency Services Protective Clothing and Equipment. It was issued by the Standards Council on July 28, 2006, with an effective date of August 17, 2006, and supersedes all previous editions.

This edition of NFPA 1971 was approved as an American National Standard on August 17, 2006.

Origin and Development of NFPA 1971

The original work on this project was done by the Sectional Committee on Protective Equipment for Fire Fighters that was a part of the Committee on Fire Department Equipment. In 1973, the Sectional Committee released a tentative standard, NFPA 19A-T, *Tentative Standard on Protective Clothing for Fire Fighters*. The Sectional Committee continued its work, and with the cooperation of the Program for Fire Services Technology of the National Bureau of Standards, developed NFPA 1971, *Standard on Protective Clothing for Structural Fire Fighting*. NFPA 1971 was adopted as a standard at the Fall Meeting in Pittsburgh, PA, on November 18, 1975.

Since that time, the Sectional Committee has been removed from the Committee on Fire Department Equipment and made a full Technical Committee.

The 1981 edition of NFPA 1971 represented a complete editorial reworking of the 1975 edition to make the document more usable by both the fire service and protective clothing manufacturers. The 1981 edition was acted on at the Annual Meeting in Dallas, TX, on May 19, 1981.

The 1986 edition incorporated a complete revision of the document to include more performance requirements and fewer specifications. Separate performance and testing chapters were written. The 1986 edition was acted on at the Annual Meeting in Atlanta, GA, on May 19–22, 1986.

Following the 1986 edition, the Committee was renamed from the Technical Committee on Protective Equipment for Fire Fighters to the Technical Committee on Fire Service Protective Clothing and Equipment.

The 1991 edition incorporated third party certification, labeling, and listing for the protective clothing. A new chapter was added to address interface items, specifically the protective hood and protective wristlets. Appendix material was developed on cleaning of garments and evaluating how materials can affect heat stress. The 1991 edition, the fourth edition, was presented to the NFPA membership at the Annual Meeting in Boston, MA, on May 19–23, 1991, and was issued with an effective date of August 16, 1991.

In October 1994, the NFPA Standards Council reorganized the Technical Committee on Fire Service Protective Clothing and Equipment as the Project on Fire and Emergency Services Protective Clothing and Equipment operating with seven technical committees and a technical correlating committee. NFPA 1971 is now the responsibility of the Technical Committee on Structural and Proximity Fire Fighting Protective Clothing and Equipment.

The 1997 edition of NFPA 1971, the fifth edition, combined four former standards on structural fire fighting protective clothing: NFPA 1971, *Standard on Protective Clothing for Structural Fire Fighting*; NFPA 1972, *Standard on Helmets for Structural Fire Fighting*; NFPA 1973, *Standard on Gloves for Structural Fire Fighting*; and NFPA 1974, *Standard on Protective Footwear for Structural Fire Fighting*, into a single document entitled NFPA 1971, *Standard on Protective Ensemble for Structural Fire Fighting*.

The 2000 edition was the sixth edition and represented a complete revision to the fifth (1997) edition. Among other changes, the edition introduced new requirements for evaporative heat transfer through garments through a total heat loss test, for evaluating thermal

Copyright National Fire Protection Association
Provided by IHS under license with NFPA
No reproduction or networking permitted without license from IHS
Not for Resale

insulation in areas of garments that are most likely to become compressed through a conductive and compressive heat resistance test, for evaluating hand dexterity with gloves through a new hand function test, and for evaluating the durability of barrier materials through additional preconditioning prior to selected physical tests of the barrier materials.

The sixth edition was presented to the Association membership at the 1999 Fall Meeting in New Orleans, LA, on November 17, 1999, and issued by the Standards Council with an effective date of February 11, 2000.

This 2007 edition of NFPA 1971, the seventh edition, represents a complete revision. The requirements of two former standards, the 2000 (sixth) edition of NFPA 1971, *Standard on Protective Ensemble for Structural Fire Fighting*, and the 2000 (second) edition of NFPA 1976, *Standard on Protective Ensemble for Proximity Fire Fighting*, have been combined into a single document entitled NFPA 1971, *Standard on Protective Ensembles for Structural Fire Fighting and Proximity Fire Fighting*.

Other than combining the two documents, the major change represented in this 2007 edition is the *optional requirements* for protection from CBRN terrorism agents (specified chemicals, biological agents, and radiological particulate) that could be released as a result of a terrorism attack. These optional requirements can be selected by fire departments that are concerned about first response of their personnel to such WMD incidents where "normal" fire fighting protective ensembles offer little or no protection from CBRN terrorism agents, and where supplementary protective ensembles that are certified as compliant with NFPA 1994, *Standard on Protective Ensembles for First Responders to CBRN Terrorism Incidents*, for protection from CBRN terrorism agents are unlikely to be provided to the vast majority of fire fighting first responders.

The CBRN optional protection can only be applied to an entire ensemble, including the specified CBRN SCBA for that ensemble, and cannot be applied to individual ensemble elements. The design and performance of the entire ensemble including the CBRN SCBA provides the CBRN protection for the wearer and depends on the proper use of the entire ensemble to accomplish this protection. No combination of individual ensemble elements short of the entire assembled ensemble will give CBRN protection.

These optional CBRN requirements that apply to both structural fire fighting protective ensembles and proximity fire fighting protective ensembles are built into the construction of the "basic" fire fighting protective ensemble elements so that nothing has to be added to or subtracted from the basic fire fighting protective clothing in order to achieve the protection from CBRN terrorism agents. The optional CBRN requirements do not decrease any of the protection for the fire fighting environments in which these ensembles are used.

This seventh edition, the 2007 edition, was presented to the Association membership at the 2006 Association Annual Meeting in Orlando, FL, on 7 June 2006, and issued by the Standards Council with an effective date of 17 August 2006.

In Memoriam, 11 September 2001

We pay tribute to the 343 members of FDNY who gave their lives to save civilian victims on 11 September 2001, at the World Trade Center. They are true American heroes in death, but they were also American heroes in life. We will keep them in our memory and in our hearts. They are the embodiment of courage, bravery, and dedication. May they rest in peace.

Copyright National Fire Protection Association
Provided by IHS under license with NFPA
No reproduction or networking permitted without license from IHS
Not for Resale

Technical Correlating Committee on Fire and Emergency Services Protective Clothing and Equipment (FAE-AAC)

Richard M. Duffy, *Chair*
International Association of Fire Fighters, DC [L]
Rep. International Association of Fire Fighters

William M. Lambert, *Secretary*
MSA Company, PA [M]
Rep. Compressed Gas Association

Leslie Anderson, U.S.D.A. Forest Service, MT [E]
Roger L. Barker, North Carolina State University, NC [SE]
Les Boord, U.S. Department of Health and Human Services, PA [E]
Steven D. Corrado, Underwriters Laboratories Incorporated, NC [RT]
Nicholas J. Curtis, Lion Apparel, Incorporated, OH [M]
Robert A. Freese, Globe Manufacturing Company, Incorporated, NH [M]
Andy Gbur, Intertek, OH [RT]
Bill Grilliot, TFG/Morning Pride Manufacturing, LLC, OH [M]
Rep. Fire and Emergency Manufacturers and Services Association Incorporated
Kimberly M. Henry, PBI Performance Products, Incorporated, NC [M]
Cy Long, Texas Commission on Fire Protection, TX [E]
David G. Matthews, Fire and Industrial (P.P.E.) Limited, United Kingdom [SE]
Rep. International Standards Organization
Jim Minx, Oklahoma State Firefighters Association, OK [C]
Gary Neilson, Reno Fire Department, NV [U]
Stephen R. Sanders, Safety Equipment Institute (SEI), VA [RT]
Denise N. Statham, Southern Mills, Incorporated, GA [M]
Jeffrey O. Stull, International Personnel Protection, Incorporated, TX [SE]
David Trivette, Tyco/Scott Health and Safety, NC [M]
Rep. International Safety Equipment Association
Robert D. Tutterow, Jr., Charlotte Fire Department, NC [U]
Rep. Fire Industry Equipment Research Organization
Harry P. Winer, U.S. Department of the Navy, MA [RT]

Alternates

Jason L. Allen, Intertek, NY [RT]
(Alt. to A. Gbur)
Eric J. Beck, Mine Safety Appliances Company, PA [M]
(Alt. to W. M. Lambert)
Janice C. Bradley, International Safety Equipment Association, VA [M]
(Alt. to D. Trivette)
Patricia A. Freeman, Globe Manufacturing Company, Incorporated, NH [M]
(Alt. to R. A. Freese)
Patricia A. Gleason, Safety Equipment Institute (SEI), VA [RT]
(Alt. to S. R. Sanders)
Mary I. Grilliot, TFG/Morning Pride Manufacturing LLC, OH [M]
(Alt. to B. Grilliot)
William E. Haskell III, U.S. Department of Health and Human Services, MA [E]
(Alt. to L. Boord)
Steven B. Lumry, Oklahoma City Fire Department, OK [C]
(Alt. to J. Minx)
Andrew P. Perrella, E. I. DuPont Company, DE [M]
(Alt. to K. M. Henry)
Frank P. Taylor, Lion Apparel, Incorporated, VA [M]
(Alt. to N. J. Curtis)

Nonvoting

Donna P. Brehm, Virginia Beach Fire Department, VA [U]
Rep. TC on Emergency Medical Services PC&E
Dean W. Cox, Fairfax County Fire and Rescue Department, VA [U]
Rep. TC on Special Operations PC&E
Glenn P. Jirka, Miami Township Fire and EMS Division, OH [E]
Rep. TC on Hazardous Materials PC&E
Kirk Owen, Plano Fire Department, TX [U]
Rep. TC on Structural and Proximity Fire Fighting PC&E
Ray F. Reed, Dallas Fire Rescue, TX [U]
Rep. TC on Respiratory Protection Equipment
Bruce H. Varner, Santa Rosa Fire Department, CA [E]
Rep. TC on Electronic Safety Equipment

Bruce W. Teele, NFPA Staff Liaison

This list represents the membership at the time the Committee was balloted on the final text of this edition. Since that time, changes in the membership may have occurred. A key to classifications is found at the back of the document.

NOTE: Membership on a committee shall not in and of itself constitute an endorsement of the Association or any document developed by the committee on which the member serves.

Committee Scope: This Committee shall have primary responsibility for documents on the design, performance, testing, and certification of protective clothing and protective equipment manufactured for fire and emergency services organizations and personnel, to protect against exposures encountered during emergency incident operations. This Committee shall also have the primary responsibility for documents on the selection, care, and maintenance of such protective clothing and protective equipment by fire and emergency services organizations and personnel.

--`,,```,,,,````-`-`,,`,,`,`,,`---
Copyright National Fire Protection Association
Provided by IHS under license with NFPA
No reproduction or networking permitted without license from IHS
Not for Resale

Technical Committee on Structural and Proximity Fire Fighting Protective Clothing and Equipment (FAE-SPF)

Kirk Owen, *Chair*
Plano Fire Department, TX [U]
Rep. NFPA Fire Service Section

Patricia A. Freeman, *Secretary*
Globe Manufacturing Company, Incorporated, NH [M]

Donald Aldridge, Lion Apparel, Incorporated, OH [M]
Jason L. Allen, Intertek, NY [RT]
James M. Baker, National Safety Clean, Incorporated, PA [IM]
Claude Barbeau, Bacou-Dalloz Protective Apparel Limited, Canada [M]
Roger L. Barker, North Carolina State University, NC [SE]
Karl J. Beeman, Ensemble Care and Maintenance Services, NV [IM]
Shane Bray, Mine Safety Appliances Company, PA [M]
Donna P. Brehm, Virginia Beach Fire Department, VA [U]
Bill Burke, Fire-Dex, Incorporated, OH [M]
Steven D. Corrado, Underwriters Laboratories Incorporated, NC [RT]
Dean W. Cox, Fairfax County Fire and Rescue Department, VA [U]
Greg Gammon, Las Vegas Fire and Rescue, NV [E]
Rep. International Association of Fire Chiefs
Mary I. Grilliot, TFG/Morning Pride Manufacturing LLC, OH [M]
William E. Haskell III, U.S. Department of Health & Human Services, MA [E]
Allen S. Hay, Fire Department City of New York, NY [U]
Stephen J. King, Deer Park, NY [SE]
James R. Lawson, U.S. National Institute of Standards and Technology, MD [RT]
Cy Long, Texas Commission on Fire Protection, TX [E]
Michael F. McKenna, Sacramento Metropolitan Fire District, CA [U]
Ted E. Nonini, United Fire Fighters of Los Angeles City, CA [L]
Richard A. Oleson, E. D. Bullard Company, KY [M]
Louis V. Ott, Gentex Corporation, PA [M]
Tom Ragan, Shelby Specialty Gloves, TN [M]
R. Wendell Robison, Fillmore, UT [C]
Rep. National Volunteer Fire Council
Kevin M. Roche, Phoenix Fire Department, AZ [U]
Rep. International Fire Service Training Association
Michael J. Scianna, City of Chicago Fire Department, IL [E]
Jeffrey O. Stull, International Personnel Protection, Incorporated, TX [SE]
William Swope, Lexington Fayette Urban County Government, KY [U]
Jim Tate, Fort Worth Fire Fighters Association, TX [L]
Rep. International Association of Fire Fighters
Robert D. Tutterow, Jr., Charlotte Fire Department, NC [U]
Rep. Fire Industry Equipment Research Organization
Harry P. Winer, U.S. Department of the Navy, MA [RT]

Alternates

Anthony Di Giovanni, Bacou-Dalloz Protective Apparel Limited, Canada [M]
(Alt. to C. Barbeau)
Scott R. Doan, Alameda County Fire Department, CA [U]
(Alt. to M. F. McKenna)
Tim Durby, City of Phoenix, AZ [U]
(Alt. to K. M. Roche)
Andy Gbur, Intertek, OH [RT]
(Alt. to J. L. Allen)
Bill Grilliot, TFG/Morning Pride Manufacturing, LLC, OH [M]
(Alt. to M. I. Grilliot)
F. Joseph Hersick, Mine Safety Appliances Company, PA [M]
(Alt. to S. Bray)
Tricia Hock, Fire-Dex, Incorporated, OH [M]
(Alt. to B. Burke)
Kim Klaren, Fairfax County Fire and Rescue Department, VA [U]
(Alt. to D. W. Cox)
Karen Lehtonen, Lion Apparel, Incorporated, OH [M]
(Alt. to D. Aldridge)
Daniel F. Melia, Fire Department City of New York, NY [U]
(Alt. to A. S. Hay)
Robin B. Royster, Underwriters Laboratories Incorporated, NC [RT]
(Alt. to S. D. Corrado)
Angie M. Shepherd, U.S. Department of Health and Human Services, PA [E]
(Alt. to W. E. Haskell III)
Kelly Sisson, City of La Mesa Fire Department, CA [U]
(Voting Alt.)
Charles C. Soros, Fire Department Safety Officers Association, WA [SE]
(Alt. to J. O. Stull)
Donald B. Thompson, North Carolina State University, NC [SE]
(Alt. to R. L. Barker)
Robert Vettori, U.S. National Institute of Standards and Technology, MD [RT]
(Alt. to J. R. Lawson)
Don Welch II, Globe Manufacturing Company, Incorporated, NH [M]
(Alt. to P. A. Freeman)

Nonvoting

Robert B. Bell, U.S. Department of Labor, DC [E]
(Alt. to M. I. Chibbaro)
Matthew I. Chibbaro, U.S. Department of Labor, DC [E]
(Alt. to R. B. Bell)

Bruce W. Teele, NFPA Staff Liaison

This list represents the membership at the time the Committee was balloted on the final text of this edition. Since that time, changes in the membership may have occurred. A key to classifications is found at the back of the document.

--`,,```,,,,````-`-`,,`,,`,`,,`---

Copyright National Fire Protection Association
Provided by IHS under license with NFPA
No reproduction or networking permitted without license from IHS
Not for Resale

NOTE: Membership on a committee shall not in and of itself constitute an endorsement of the Association or any document developed by the committee on which the member serves.

Committee Scope: This Committee shall have primary responsibility for documents on protective ensembles, except respiratory protection, that provides head, limb, hand, foot, torso, and interface protection for fire fighters and other emergency services responders during incidents involving structural fire fighting operations or proximity fire fighting operations.

Structural fire fighting operations include the activities of rescue, fire suppression, and property conservation during incidents involving fires in buildings, enclosed structures, vehicles, marine vessels, or like properties.

Proximity fire fighting operations include the activities of rescue, fire suppression, and property conservation during incidents involving commercial and military aircraft fires, bulk flammable gas fires, bulk flammable and combustible liquids fires, combustible metal fires, exotic fuel fires, and other such fires that produce very high levels of radiant heat as well as convective and conductive heat.

Additionally, this Committee shall have primary responsibility for documents on the selection, care, and maintenance of structural and proximity fire fighting protective ensembles by fire and emergency services organizations and personnel.

--`,,```,,,,````-`-`,,`,,`,`,,`---

Copyright National Fire Protection Association
Provided by IHS under license with NFPA
No reproduction or networking permitted without license from IHS
Not for Resale

Contents

Chapter 1 Administration **1971–** 9
1.1 Scope **1971–** 9
1.2 Purpose **1971–** 9
1.3 Application **1971–** 9
1.4 Units **1971–** 10

Chapter 2 Referenced Publications **1971–** 10
2.1 General **1971–** 10
2.2 NFPA Publications **1971–** 10
2.3 Other Publications **1971–** 10
2.4 References for Extracts in Mandatory Sections. (Reserved) **1971–** 12

Chapter 3 Definitions **1971–** 12
3.1 General **1971–** 12
3.2 NFPA Official Definitions **1971–** 12
3.3 General Definitions **1971–** 12

Chapter 4 Certification **1971–** 16
4.1 General **1971–** 16
4.2 Certification Program **1971–** 16
4.3 Inspection and Testing **1971–** 17
4.4 Recertification **1971–** 18
4.5 Manufacturers' Quality Assurance Program **1971–** 19
4.6 Hazards Involving Compliant Product **1971–** 19
4.7 Manufacturers' Investigation of Complaints and Returns **1971–** 20
4.8 Manufacturers' Safety Alert and Product Recall Systems **1971–** 20

Chapter 5 Labeling and Information **1971–** 20
5.1 Product Label Requirements for Both Ensembles **1971–** 20
5.2 Additional Product Label Requirements for Structural Fire Fighting Ensemble Elements Only **1971–** 21
5.3 Additional Product Label Requirements for Proximity Fire Fighting Ensemble Elements Only **1971–** 21
5.4 User Information Requirements for Both Ensembles **1971–** 22

Chapter 6 Design Requirements **1971–** 23
6.1 Protective Garment Element Design Requirements for Both Ensembles **1971–** 23
6.2 Additional Design Requirements for Structural Fire Fighting Protective Garment Elements Only **1971–** 24
6.3 Additional Design Requirements for Proximity Fire Fighting Protective Garment Elements Only **1971–** 25
6.4 Protective Helmet Element Design Requirements for Both Ensembles **1971–** 26
6.5 Additional Design Requirements for Structural Fire Fighting Protective Helmet Elements Only **1971–** 26
6.6 Additional Design Requirements for Proximity Fire Fighting Helmet Elements Only **1971–** 27
6.7 Protective Glove Elements Design Requirements for Both Ensembles **1971–** 27
6.8 Additional Design Requirements for Structural Fire Fighting Protective Glove Elements Only. (Reserved) **1971–** 28
6.9 Additional Design Requirements for Proximity Fire Fighting Protective Glove Elements Only **1971–** 28
6.10 Protective Footwear Elements Design Requirements for Both Ensembles **1971–** 30
6.11 Additional Design Requirements for Structural Fire Fighting Protective Footwear Only. (Reserved) **1971–** 31
6.12 Additional Design Requirements for Proximity Fire Fighting Protective Footwear Only. (Reserved) **1971–** 31
6.13 Protective Hood Interface Component Design Requirements for Both Ensembles **1971–** 31
6.14 Additional Design Requirements for Structural Fire Fighting Protective Hood Interface Components Only **1971–** 31
6.15 Additional Design Requirements for Proximity Fire Fighting Protective Hood Interface Components Only. (Reserved) **1971–** 32
6.16 Protective Wristlets Interface Component Design Requirements for Both Ensembles **1971–** 32
6.17 Additional Design Requirements for Structural Fire Fighting Protective Wristlet Interface Components Only. (Reserved) **1971–** 32
6.18 Additional Design Requirements for Proximity Fire Fighting Protective Wristlet Interface Components Only. (Reserved) **1971–** 32
6.19 Reserved **1971–** 32
6.20 Optional Design Requirements for Protection from CBRN Terrorism Agents **1971–** 32

Chapter 7 Performance Requirements **1971–** 33
7.1 Protective Garment Elements Performance Requirements for Both Ensembles **1971–** 33
7.2 Additional Performance Requirements for Structural Fire Fighting Protective Garment Elements Only **1971–** 34

--`,,```,,,,````-`-`,,`,,`,`,,`---

Copyright National Fire Protection Association
Provided by IHS under license with NFPA
No reproduction or networking permitted without license from IHS
Not for Resale

7.3 Additional Performance Requirements for Proximity Fire Fighting Protective Garment Elements Only **1971–** 34
7.4 Protective Helmet Elements Performance Requirements for Both Ensembles **1971–** 34
7.5 Additional Performance Requirements for Structural Fire Fighting Protective Helmet Elements Only **1971–** 35
7.6 Additional Performance Requirements for Proximity Fire Fighting Helmet Elements Only **1971–** 36
7.7 Protective Glove Elements Performance Requirements for Both Ensembles **1971–** 36
7.8 Additional Performance Requirements for Structural Fire Fighting Protective Glove Elements Only **1971–** 37
7.9 Additional Performance Requirements for Proximity Fire Fighting Protective Glove Elements Only **1971–** 37
7.10 Protective Footwear Elements Performance Requirements for Both Ensembles **1971–** 38
7.11 Additional Performance Requirements for Structural Fire Fighting Protective Footwear Elements Only **1971–** 38
7.12 Additional Performance Requirements for Proximity Fire Fighting Protective Footwear Elements Only **1971–** 38
7.13 Protective Hood Interface Component Performance Requirements for Both Ensembles. (Reserved) **1971–** 39
7.14 Additional Performance Requirements for Structural Fire Fighting Protective Hood Interface Components Only **1971–** 39
7.15 Additional Performance Requirements for Proximity Fire Fighting Protective Hood Interface Components Only. (Reserved) **1971–** 39
7.16 Protective Wristlet Interface Component Performance Requirements for Both Ensembles **1971–** 39
7.17 Additional Performance Requirements for Structural Fire Fighting Protective Wristlet Interface Components Only. (Reserved) **1971–** 39
7.18 Additional Performance Requirements for Proximity Fire Fighting Protective Wristlet Interface Components Only. (Reserved) **1971–** 39
7.19 Reserved **1971–** 39
7.20 Optional Performance Requirements for Protection from CBRN Terrorism Agents **1971–** 39

Chapter 8 Test Methods **1971–** 41
8.1 Sample Preparation Procedures **1971–** 41
8.2 Flame Resistance Test 1 ..... **1971–** 43
8.3 Flame Resistance Test 2 ..... **1971–** 45
8.4 Flame Resistance Test Three **1971–** 46
8.5 Flame Resistance Test Four **1971–** 48
8.6 Heat and Thermal Shrinkage Resistance Test **1971–** 49
8.7 Conductive Heat Resistance Test 1 ..... **1971–** 52
8.8 Conductive Heat Resistance Test 2 ..... **1971–** 53
8.9 Radiant Heat Resistance Test 1 ..... **1971–** 53
8.10 Thermal Protective Performance (TPP) Test **1971–** 54
8.11 Thread Melting Test **1971–** 55
8.12 Tear Resistance Test **1971–** 56
8.13 Burst Strength Test **1971–** 56
8.14 Seam-Breaking Strength Test **1971–** 56
8.15 Top Impact Resistance Test (Force) **1971–** 57
8.16 Impact Resistance Test (Acceleration) **1971–** 59
8.17 Faceshield/Goggle Component Lens Impact Resistance Test **1971–** 61
8.18 Impact and Compression Tests **1971–** 62
8.19 Physical Penetration Resistance Test **1971–** 62
8.20 Puncture Resistance Test 1 ..... **1971–** 63
8.21 Puncture Resistance Test 2 ..... **1971–** 63
8.22 Cut Resistance Test **1971–** 63
8.23 Faceshield/Goggle Component Lens Scratch Resistance Test **1971–** 64
8.24 Abrasion Resistance Test **1971–** 65
8.25 Cleaning Shrinkage Resistance Test **1971–** 68
8.26 Water Absorption Resistance Test **1971–** 68
8.27 Water Penetration Resistance Test **1971–** 69
8.28 Liquid Penetration Resistance Test **1971–** 69
8.29 Viral Penetration Resistance Test **1971–** 71
8.30 Corrosion Resistance Test **1971–** 72
8.31 Electrical Insulation Test 1 ..... **1971–** 72
8.32 Electrical Insulation Test 2 ..... **1971–** 73
8.33 Overall Liquid Integrity Test 1 ..... **1971–** 73
8.34 Total Heat Loss Test **1971–** 74
8.35 Retention System Test **1971–** 74
8.36 Suspension System Retention Test **1971–** 74
8.37 Glove Donning Test **1971–** 75
8.38 Glove Hand Function Test **1971–** 77
8.39 Grip Test **1971–** 77
8.40 Ladder Shank Bend Resistance Test **1971–** 78
8.41 Slip Resistance Test **1971–** 79
8.42 Label Durability and Legibility Test 1 ..... **1971–** 79
8.43 Label Durability and Legibility Test 2 ..... **1971–** 80
8.44 Shell Retention Test **1971–** 80
8.45 Luminous (Visible) Transmittance Test **1971–** 80
8.46 Retroreflectivity and Fluorescence Test **1971–** 81
8.47 Hood Opening Size Retention Test **1971–** 82
8.48 Whole Garment and Ensemble Liquid Penetration Test **1971–** 82

Copyright National Fire Protection Association
Provided by IHS under license with NFPA
No reproduction or networking permitted without license from IHS
Not for Resale

8.49 Eyelet and Stud Post Attachment Test **1971–** 85
8.50 Breaking Strength Test **1971–** 85
8.51 Conductive and Compressive Heat Resistance (CCHR) Test **1971–** 85
8.52 Radiant Protective Performance Test ... **1971–** 86
8.53 Radiant Heat Resistance Test 3 ..... **1971–** 87
8.54 Wet Flex Test **1971–** 87
8.55 Adhesion After Wet Flex–Tape Method Test **1971–** 88
8.56 Flex at Low Temperature Test **1971–** 90
8.57 Resistance to High Temperature Blocking Test **1971–** 90
8.58 Drag Rescue Device (DRD) Materials Strength Test **1971–** 90
8.59 Drag Rescue Device (DRD) Function Test **1971–** 91
8.60 Conductive Heat Resistance Test 3 ..... **1971–** 92
8.61 Radiant Heat Resistance Test 2 ..... **1971–** 92
8.62 Light Degradation Resistance Test **1971–** 93
8.63 Liner Retention Test **1971–** 93
8.64 Reserved **1971–** 94
8.65 Reserved **1971–** 94
8.66 Man-In-Simulant Test (MIST) **1971–** 94
8.67 Chemical Permeation Resistance Test **1971–** 97
8.68 Puncture Propagation Tear Resistance Test **1971–** 99
8.69 Cold Temperature Performance Test 1 ... **1971–**100
8.70 Abrasion Resistance Test 2 ..... **1971–**100
8.71 Overall Liquid Integrity Test 2 ..... **1971–**100
8.72 Flex Cracking Resistance Test **1971–**101

Annex A Explanatory Material **1971–**101

Annex B Informational References **1971–**117

Index **1971–**119

Copyright National Fire Protection Association
Provided by IHS under license with NFPA
No reproduction or networking permitted without license from IHS
Not for Resale

NFPA 1971

Standard on

Protective Ensembles for Structural Fire Fighting and Proximity Fire Fighting

2007 Edition

IMPORTANT NOTE: This NFPA document is made available for use subject to important notices and legal disclaimers. These notices and disclaimers appear in all publications containing this document and may be found under the heading "Important Notices and Disclaimers Concerning NFPA Documents." They can also be obtained on request from NFPA or viewed at www.nfpa.org/disclaimers.

NOTICE: An asterisk (*) following the number or letter designating a paragraph indicates that explanatory material on the paragraph can be found in Annex A.

Information on referenced publications can be found in Chapter 2 and Annex B.

Chapter 1 Administration

1.1* Scope.

1.1.1 This standard shall specify the minimum design, performance, testing, and certification requirements for structural fire fighting protective ensembles and ensemble elements that include coats, trousers, coveralls, helmets, gloves, footwear, and interface components.

1.1.2 This standard shall specify the minimum design, performance, testing, and certification requirements for proximity fire fighting protective ensembles and ensemble elements that include coats, trousers, coveralls, helmets, gloves, footwear, and interface components.

1.1.3* This standard shall also specify additional optional requirements for structural fire fighting protective ensembles and proximity fire fighting protective ensembles that will provide limited protection from specified chemicals, biological agents, and radiological particulates (CBRN) terrorism agents.

1.1.3.1* This standard shall establish requirements for a single exposure wearing of protective ensembles for limited protection from specified CBRN terrorism agents.

1.1.4 This standard shall specify requirements for new structural fire fighting protective ensembles, new proximity fire fighting protective ensembles, or new elements for both ensembles.

1.1.5* This standard shall not specify requirements for any accessories that could be attached to the certified product, but are not necessary for the certified product to meet the requirements of this standard.

1.1.6 Other than for the certification of structural or proximity protective ensembles to the optional CBRN requirements, this standard shall not specify the respiratory protection that is necessary for proper protection with both protective ensembles.

1.1.7 Certification of compliant structural fire fighting protective ensembles, compliant proximity fire fighting protective ensembles, and compliant elements of both ensembles to the requirements of this standard shall not preclude certification to additional appropriate standards where the ensemble or ensemble element meets all the applicable requirements of each standard.

1.1.8 This standard shall not be construed as addressing all of the safety concerns associated with the use of compliant protective ensembles or ensemble elements. It shall be the responsibility of the persons and organizations that use compliant protective ensembles or ensemble elements to establish safety and health practices and determine the applicability of regulatory limitations prior to use.

1.1.9 This standard shall not be construed as addressing all of the safety concerns, if any, associated with the use of this standard by testing facilities. It shall be the responsibility of the persons and organizations that use this standard to conduct testing of protective ensembles or ensemble elements to establish safety and health practices and determine the applicability of regulatory limitations prior to using this standard for any designing, manufacturing, and testing.

1.1.10 Nothing herein shall restrict any jurisdiction or manufacturer from exceeding these minimum requirements.

1.2* Purpose.

1.2.1 The purpose of this standard shall be to establish minimum levels of protection for fire fighting personnel assigned to fire department operations including but not limited to structural fire fighting, proximity fire fighting, rescue, emergency medical, and other emergency first responder functions.

1.2.1.1 To achieve this purpose, this standard shall establish minimum requirements for structural fire fighting protective ensembles and ensemble elements designed to provide fire fighting personnel limited protection from thermal, physical, environmental, and bloodborne pathogen hazards encountered during structural fire fighting operations.

1.2.1.2 To achieve this purpose, this standard shall establish minimum requirements for proximity fire fighting protective ensembles and ensemble elements designed to provide fire fighting personnel limited protection from thermal exposures where high levels of radiant heat as well as convective and conductive heat are released, and from physical, environmental, and bloodborne pathogen hazards encountered during proximity fire fighting operations.

1.2.2 The purpose of this standard shall also be to establish a minimum level of protection for structural and proximity fire fighting personnel from specified CBRN terrorism agents in vapor, liquid splash, and particulate environments during CBRN terrorism incidents as an option for compliant structural fire fighting ensembles and for compliant proximity fire fighting ensembles, and for compliant elements for both ensembles.

1.2.3* Controlled laboratory tests used to determine compliance with the performance requirements of this standard shall not be deemed as establishing performance levels for all situations to which personnel can be exposed.

1.2.4 This standard shall not be utilized as a detailed manufacturing or purchasing specification but shall be permitted to be referenced in purchase specifications as minimum requirements.

1.3 Application.

1.3.1 This standard shall apply to the design, manufacturing, testing, and certification of new structural fire fighting protective

Copyright National Fire Protection Association
Provided by IHS under license with NFPA
No reproduction or networking permitted without license from IHS
Not for Resale

ensembles, new proximity fire fighting protective ensembles, and new elements of both ensembles for protection from thermal, physical, environmental, and bloodborne pathogen hazards encountered during structural fire fighting operations.

1.3.2* This standard shall apply to the design, manufacturing, testing, and certification of new structural fire fighting protective ensembles, new proximity fire fighting protective ensembles, and new elements of both ensembles for the additional optional protection from specified CBRN terrorism agents.

1.3.3 This standard shall not apply to any protective ensembles, ensemble elements, or protective clothing for any other types of fire fighting operations.

1.3.4 This standard shall not apply to structural fire fighting protective ensembles manufactured according to previous editions of NFPA 1971, *Standard on Protective Ensembles for Structural Fire Fighting and Proximity Fire Fighting*.

1.3.5 This standard shall not apply to structural fire fighting protective clothing and equipment manufactured according to past editions of NFPA 1971, *Standard on Protective Ensembles for Structural Fire Fighting and Proximity Fire Fighting*; NFPA 1972, *Standard on Helmets for Structural Fire Fighting*; NFPA 1973, *Standard on Gloves for Structural Fire Fighting*; and NFPA 1974, *Standard on Protective Footwear for Structural Fire Fighting*.

1.3.6 This standard shall not apply to proximity fire fighting protective ensembles manufactured according to previous editions of NFPA 1976, *Standard on Protective Ensemble for Proximity Fire Fighting*.

1.3.7 This standard shall not apply to proximity fire fighting protective clothing and equipment manufactured according to past editions of NFPA 1976, *Standard on Protective Ensemble for Proximity Fire Fighting*.

1.3.8* This standard shall not apply to any accessories that could be attached to the certified product, before or after purchase, but are not necessary for the certified product to meet the requirements of this standard.

1.3.9 This standard shall not apply to the use of structural fire fighting protective ensembles, proximity fire fighting protective ensembles, or elements of these ensembles since these requirements are specified in NFPA 1500, *Standard on Fire Department Occupational Safety and Health Program*.

1.4 Units.

1.4.1 In this standard, values for measurement are followed by an equivalent in parentheses, but only the first stated value shall be regarded as the requirement.

1.4.2 Equivalent values in parentheses shall not be considered as the requirement, as these values are approximate.

Chapter 2 Referenced Publications

2.1 General. The documents or portions thereof listed in this chapter are referenced within this standard and shall be considered part of the requirements of this document.

2.2 NFPA Publications. National Fire Protection Association, 1 Batterymarch Park, Quincy, MA 02169-7471.

NFPA 1500, *Standard on Fire Department Occupational Safety and Health Program,* 2007 edition.

NFPA 1981, *Standard on Open-Circuit Self-Contained Breathing Apparatus for Fire and Emergency Services,* 2002 edition.

2.3 Other Publications.

2.3.1 AATCC Publications. American Association of Textile Chemists and Colorists, P.O. Box 12215, Research Triangle Park, NC 27709.

AATCC 35, *Water Resistance: Rain Test*, 2000.

AATCC 42, *Test Method for Water Resistance: Impact Penetration Test*, 2000.

AATCC 70, *Test Method for Water Repellency: Tumble Jar Dynamic Absorption Test*, 2005.

AATCC 135, *Dimensional Changes in Automatic Home Laundering of Woven and Knit Fabrics*, 2004.

2.3.2 ASTM Publications. ASTM International, 100 Barr Harbor Drive, P.O. Box C700, West Conshohocken, PA 19428-2959.

ASTM A 666, *Standard Specification for Annealed or Cold Worked Austenitic Stainless Steel Sheet, Strip, Plate, and Flat Bar*, 2003.

ASTM B 117, *Standard Method of Salt Spray (Fog) Testing*, 2003.

ASTM B 152, *Specification for Copper Sheet, Strip Plate, and Rolled Bar*, 2000.

ASTM D 471, *Standard Test Method for Rubber Property-Effect of Liquids*, 1998e2.

ASTM D 747, *Standard Test Method for Apparent Bending Modulus of Plastics by Means of a Cantilever Beam*, 2002.

ASTM D 751, *Standard Test Methods for Coated Fabrics*, 2000e1.

ASTM D 1003, *Standard Test Method for Haze and Luminous Transmittance of Transparent Plastics*, 2000.

ASTM D 1630, *Standard Test Method for Rubber Property — Abrasion Resistance (Footwear Abrader)*, 1994 (2000).

ASTM D 1683, *Standard Test Method for Failure in Sewn Seams of Woven Fabrics*, 2004.

ASTM D 1776, *Standard Practice for Conditioning Textiles for Testing*, 1996.

ASTM D 2582, *Standard Test Method for Puncture Propagation Tear Resistance of Plastic Film and Thin Sheeting*, 2003.

ASTM D 3787, *Standard Test Method for Hydraulic Bursting Strength of Knitted Goods and Nonwoven Fabrics — Ball Burst Testing Method*, 2001.

ASTM D 3884, *Standard Guide for Abrasion Resistance of Textile Fabrics (Rotary Platform, Double-Head Method)*, 2001e1.

ASTM D 3940, *Standard Test Method for Bursting Strength (Load) and Elongation of Sewn Seams of Knit or Woven Stretch Textile Fabrics*, 1983.

ASTM D 4157, *Standard Test Method for Abrasion Resistance of Textile Fabrics (Oscillatory Cylinder Method)*, 2002.

ASTM D 4966, *Standard Test Method for Abrasion Resistance of Textile Fabrics*, 1998 (2004).

ASTM D 5034, *Standard Method for Breaking Force and Elongation of Textile Fabrics (Grab Test)*, 1995 (2001).

ASTM D 5587, *Standard Test Method for the Tearing Strength of Fabrics by the Trapezoidal Procedure*, 2005.

Copyright National Fire Protection Association
Provided by IHS under license with NFPA
No reproduction or networking permitted without license from IHS
Not for Resale

ASTM D 6413, *Standard Test Method for Flame Resistance of Textiles (Vertical Test)*, 1999.

ASTM D 6775, *Standard Test Method for Breaking Strength and Elongation of Textile Webbing, Tape and Braided Material*, 2002e1.

ASTM E 809, *Standard Practice for Measuring Photometric Characteristics of Retroreflectors*, 2002.

ASTM E 991, *Standard Practice for Color Measurement of Fluorescent Specimens*, 1998.

ASTM E 1164, *Standard Practice for Obtaining Spectrometric Data for Object Color Evaluation*, 2002.

ASTM E 2152, *Standard Practice for Computing the Colors of Fluorescent Objects from Bispectral Photometric Data*, 2001.

ASTM E 2153, *Standard Practice for Obtaining Bispectral Photometric Data for Evaluation of Fluorescent Color*, 2001; Edition 3.

ASTM F 392, *Standard Test Method for Flex Durability of Flexible Barrier Materials*, 1993 (2004).

ASTM F 489, *Standard Test Method for Static Coefficient of Friction of Shoe Sole and Heel Materials as Measured by the James Machine*, 1996.

ASTM F 739, *Standard Test Method for Resistance of Protective Clothing Materials to Permeation by Liquids or Gases Under Conditions of Continuous Contact*, 1999a.

ASTM F 903, *Standard Test Method for Resistance of Protective Clothing Materials to Penetration by Liquids*, 2003 (2004).

ASTM F 1060, *Standard Test Method for Thermal Protective Performance of Materials for Protective Clothing for Hot Surface Contact*, 2005.

ASTM F 1342, *Standard Test Method for Protective Clothing Material Resistance to Puncture*, 2005.

ASTM F 1359, *Standard Practice for Evaluating the Liquid-Tight Integrity of Chemical Protective Clothing*, 1999a (2004).

ASTM F 1671, *Standard Test Method for Resistance of Materials Used in Protective Clothing to Penetration by Blood-Borne Pathogens Using Phi-X-174 Bacteriophage as a Test System*, 2003.

ASTM F 1790, *Standard Test Methods for Measuring Cut Resistance of Materials Used in Protective Clothing*, 2005.

ASTM F 1868, *Standard Test Method for Thermal and Evaporative Resistance of Clothing Materials, Using a Sweating Hot Plate*, 2002.

ASTM F 1939, *Standard Test Method for Radiant Protective Performance*, 1999a.

ASTM F 2010, *Standard Test Method for Evaluation of Glove Effects on Wearer Hand Dexterity Using a Modified Pegboard Test*, 2000 (2005)

ASTM F 2412, *Standard Test Methods for Foot Protection*, 2005.

ASTM G 155, *Standard Practice for Operating Xenon Arc Light Apparatus for Exposure of Non-Materials*, 2005a.

2.3.3 Commission Internationale de l'Eclairage Publications. U.S. National Committee of the CIE, c/o Mr. Thomas M. Lemons, TLA — Lighting Consultants, Inc., 7 Pond Street, Salem, MA 01970-4819.

ISO/CIE 10526, *Calorimetric Illuminants*, 1999.

2.3.4 CSA Publications. Canadian Standards Association, 5060 Spectrum Way, Mississauga, ON, L4W 5N6, Canada.

CSA Z195, *Protective Footwear*, 2002.

2.3.5 EN Publications. European Standard, BSI, Linford Wood, Milton Keynes MK14 6LE, UK.

EN 471, *Specification for High Visibility Warning Clothing*, 2004.

2.3.6 FIA Publications. Footwear Industries of America, 1420 K Street, NW, Suite 600, Washington, DC 20005.

FIA 1209, *Whole Shoe Flex*, 1984.

2.3.7 GSA Publications. U.S. General Services Administration, 1800 F Street, N.W., Washington, DC 20405.

Federal Test Method Standard 191A, *Textile Test Methods*, 20 July 1978.

2.3.8 ISO Publications. International Organization for Standardization, 1, rue de Varembé, Case postale 56, CH-1211 Geneve 20, Switzerland.

ISO Guide 27, *Guidelines for corrective action to be taken by a certification body in the event of misuse of its mark of conformity*, 1983.

ISO Guide 62, *General requirements for bodies operating assessment and certification/representation of quality systems*, 1996.

ISO Guide 65, *General requirements for bodies operating product certification systems*, 1996.

ISO 9001, *Quality management systems — requirements*, 2000.

ISO 17011, *Conformity assessment — general requirements for accreditation bodies accrediting conformity assessment bodies*, 2004.

ISO 17025, *General requirements for the competence of calibration and testing laboratories*, 2005.

ISO 17492, *Clothing for protection against heat and flame — determination of heat transmission on exposure to both flame and radiant heat*, 2003.

ISO 17493, *Clothing and equipment for protection against heat — test method for convective heat resistance using a hot air circulatory oven*, 2000.

2.3.9 SAE Publications. Society of Automotive Engineers, 400 Commonwealth Drive, Warrendale, PA 15096.

SAE J211, *Instrumentation for Impact Test*, 1988.

2.3.10 U.S. Department of Defense Publications. Standardization Document Order Desk, Building 4/D, 700 Robbins Avenue, Philadelphia, PA 19111-5094.

A-A-55634, *Commercial Item Description, Zippers (Fasteners, Slide, Interlocking)*, March 23, 2004.

2.3.11 U.S. Government Publications. U.S. Government Printing Office, Washington, DC 20402.

Title 29, Code of Federal Regulations, Part 1910, "Personal Protective Equipment," 1994.

Title 42, Code of Federal Regulations, Part 84, Approval of Respiratory Protective Devices, 2004. *Statement of Standard for NIOSH CBRN SCBA Testing*, 2003.

2.3.12 U.S. Military Publications. U.S. Army Developmental Test Command (DTC), ATTN: CSTE-DTC-TT-S, Aberdeen Proving Ground, MD 21005-5055.

Federal Specification CCC-C-419, *Cloth, Duck, Unbleached, Plied-Yarns, Army and Numbered*, 1985.

--`,,```,,,,````-`-`,,`,,`,`,,`---

Copyright National Fire Protection Association
Provided by IHS under license with NFPA
No reproduction or networking permitted without license from IHS Not for Resale

Stoll, A. M., and M. A. Chianta, "Method and Rating System for Evaluation of Thermal Protection," *Aerospace Medicine*, vol. 40, 1968, pp. 1232–1238.

Test Operations Procedure (TOP 10-2-022), *Man-In-Simulant Test (MIST) — Chemical Vapor Testing of Chemical/ Biological Protective Suits*, September 2001.

2.3.13 Other Publications.

Merriam-Webster's Collegiate Dictionary, 11th edition, Merriam-Webster, Inc., Springfield, MA, 2003.

2.4 References for Extracts in Mandatory Sections. (Reserved)

Chapter 3 Definitions

3.1 General. The definitions contained in this chapter shall apply to the terms used in this standard. Where terms are not defined in this chapter or within another chapter, they shall be defined using their ordinarily accepted meanings within the context in which they are used. *Merriam-Webster's Collegiate Dictionary*, 11th edition, shall be the source for the ordinarily accepted meaning.

3.2 NFPA Official Definitions.

3.2.1* Approved. Acceptable to the authority having jurisdiction.

3.2.2* Authority Having Jurisdiction (AHJ). An organization, office, or individual responsible for enforcing the requirements of a code or standard, or for approving equipment, materials, an installation, or a procedure.

3.2.3 Labeled. Equipment or materials to which has been attached a label, symbol, or other identifying mark of an organization that is acceptable to the authority having jurisdiction and concerned with product evaluation, that maintains periodic inspection of production of labeled equipment or materials, and by whose labeling the manufacturer indicates compliance with appropriate standards or performance in a specified manner. *(See also definition 3.3.79, Product Label.)*

3.2.4* Listed. Equipment, materials, or services included in a list published by an organization that is acceptable to the authority having jurisdiction and concerned with evaluation of products or services, that maintains periodic inspection of production of listed equipment or materials or periodic evaluation of services, and whose listing states that either the equipment, material, or service meets appropriate designated standards or has been tested and found suitable for a specified purpose.

3.3 General Definitions.

3.3.1 Arch. The bottom curve of the foot from the heel to the ball.

3.3.2 Barrier Material. The part of the composite that limits transfer from the face of the layer to the other side.

3.3.3 Basic Plane. The anatomical plane that includes the superior rim of the external auditory meatus, the upper edge of the external openings of the ear, and the inferior margin of the orbit, which is the lowest point of the floor of the eye socket.

3.3.4 Biological Terrorism Agents. Liquid or particulate agents that can consist of biologically derived toxin or pathogen to inflict lethal or incapacitating casualties.

3.3.5* Bitragion Coronal Arc. The arc between the right and left tragion as measured over the top of the head in a plane perpendicular to the midsagittal plane.

3.3.6* Bitragion Inion Arc. The arc between tragion as measured over the inion.

3.3.7 Body Fluid–Borne Pathogen. An infectious bacterium or virus carried in human, animal, or clinical body fluids, organs, or tissue.

3.3.8 Body Fluids. Fluids that are produced by the body including, but not limited to, blood, semen, mucus, feces, urine, vaginal secretions, breast milk, amniotic fluid, cerebrospinal fluid, synovial fluid, and pericardial fluid.

3.3.9 Bootie. A sock-like extension of the garment or suit leg that covers the entire foot.

3.3.10 Brim. A part of the shell of the helmet extending around the entire circumference of the helmet.

3.3.11 Brim Line. A horizontal plane intersecting the point of the front opening of the helmet at the midsagittal plane.

3.3.12 Cargo Pockets. Pockets located on the protective garment exterior.

3.3.13 CBRN. An abbreviation for chemicals, biological agents, and radiological particulates hazards. *(See also 3.3.15, CBRN Terrorism Agents.)*

3.3.14* CBRN Barrier Layer. The part of the composite that is intended to provide protection against CBRN terrorism agents.

3.3.15* CBRN Terrorism Agents. Chemicals, biological agents, and radiological particulates that could be released as the result of a terrorist attack. *(See also 3.3.19, Chemical Terrorism Agents; 3.3.4, Biological Terrorism Agents; and 3.3.104, Radiological Particulate Terrorism Agents.)*

3.3.16 Certification/Certified. A system whereby a certification organization determines that a manufacturer has demonstrated the ability to produce a product that complies with the requirements of this standard, authorizes the manufacturer to use a label on listed products that comply with the requirements of this standard, and establishes a follow-up program conducted by the certification organization as a check on the methods the manufacturer uses to determine continued compliance of labeled and listed products with the requirements of this standard.

3.3.17 Certification Organization. An independent, third-party organization that determines product compliance with the requirements of this standard with a labeling/ listing/ follow-up program.

3.3.18 Char. The formation of a brittle residue when material is exposed to thermal energy.

3.3.19 Chemical Terrorism Agents. Liquid, solid, gaseous, and vapor chemical warfare agents and toxic industrial chemicals used to inflict lethal or incapacitating casualties, generally on a civilian population, as a result of a terrorist attack. *(See also 3.3.20, Chemical Warfare (CW) Agents, and 3.3.136, Toxic Industrial Chemicals.)*

3.3.20 Chemical Warfare (CW) Agents. Liquid, solid, and gaseous chemical agents (most are liquids) traditionally used during warfare or armed conflict to kill or incapacitate an enemy.

3.3.21 Chin Strap. An adjustable strap for the helmet that fits under the chin to secure the helmet to the head.

Copyright National Fire Protection Association
Provided by IHS under license with NFPA
No reproduction or networking permitted without license from IHS
Not for Resale

3.3.22 Coat. See 3.3.119, Structural Fire Fighting Protective Coat, and 3.3.93, Proximity Fire Fighting Protective Coat.

3.3.23 Collar. The portion of the coat or coverall that encircles the neck.

3.3.24 Collar Lining. The part of collar fabric composite that is next to the skin when the collar is closed in the raised position.

3.3.25 Compliance/Compliant. Meeting or exceeding all applicable requirements of this standard.

3.3.26 Component(s). Any material, part, or subassembly used in the construction of the compliant product.

3.3.27 Composite. The layer or layers of materials or components.

3.3.28 Coronal Plane. The anatomical plane perpendicular to both the basic and midsagittal planes and containing the midpoint of a line connecting the superior rims of the right and left auditory meatuses.

3.3.29 Coverall. See 3.3.120, Structural Fire Fighting Protective Coverall, and 3.3.94, Proximity Fire Fighting Protective Coverall.

3.3.30 Crown. The portion of the helmet that covers the head above the reference plane.

3.3.31 Crown Straps. The part of the helmet suspension that passes over the head.

3.3.32 Dielectric Test Plane. A plane that runs diagonally through the headform from the intersection of the test line and midsagittal plane in the front of the headform to the intersection of the reference plane and midsagittal plane in the rear of the headform.

3.3.33 Drip. To run or fall in drops or blobs.

3.3.34 Ear Covers. An interface component of the protective helmet element that provides limited protection to the helmet/coat interface area.

3.3.35 Element(s). See 3.3.38, Ensemble Elements.

3.3.36 Energy Absorbing System. Materials or systems used to attenuate impact energy.

3.3.37 Ensemble. See 3.3.121, Structural Fire Fighting Protective Ensemble, and 3.3.95, Proximity Fire Fighting Protective Ensemble.

3.3.38 Ensemble Elements. The compliant products that provide protection to the upper and lower torso, arms, legs, head, hands, and feet.

3.3.39* Entry Fire Fighting. Extraordinarily specialized fire fighting operations that can include the activities of rescue, fire suppression, and property conservation at incidents involving fires producing extreme levels of radiant, conductive, and convective heat.

3.3.40* Faceshield. The component of the helmet that provides limited protection to a portion of the wearer's face.

3.3.41 Faceshield/Goggle. The term that applies to the helmet component that is a faceshield, or goggle, or both.

3.3.42 Flame Resistance. The property of a material whereby combustion is prevented, terminated, or inhibited following the application of a flaming or nonflaming source of ignition, with or without subsequent removal of the ignition source. Flame resistance can be an inherent property of a material, or it can be imparted by specific treatment. *(See also 3.3.60, Inherent Flame Resistance.)*

3.3.43 Fluorescence. The process by which radiant flux of certain wavelengths is absorbed and reradiated, nonthermally in other, usually longer, wavelengths.

3.3.44 Follow-Up Program. The sampling, inspection, tests, or other measures conducted by the certification organization on a periodic basis to determine the continued compliance of labeled and listed products that are being produced by the manufacturer to the requirements of this standard.

3.3.45* Footwear. See 3.3.123, Structural Fire Fighting Protective Footwear, and 3.3.97, Proximity Fire Fighting Protective Footwear.

3.3.46 Functional. The ability of an element or component of an element to continue to be utilized for its intended purpose.

3.3.47 Garment(s). See 3.3.124, Structural Fire Fighting Protective Garments, and 3.3.98, Proximity Fire Fighting Protective Garments.

3.3.48 Gauntlet. An interface component of the protective glove element that provides limited protection to the coat/glove interface area.

3.3.49 Glove. See 3.3.125, Structural Fire Fighting Protective Gloves, and 3.3.99, Proximity Fire Fighting Protective Gloves.

3.3.50 Glove Liner. The innermost component of the glove body composite that comes into contact with the wearer's skin.

3.3.51 Glove Wristlet. See 3.3.143, Wristlet.

3.3.52 Goggles. The component of the helmet that provides protection to the wearer's eyes and a portion of the wearer's face.

3.3.53 Grading. The process of proportioning components for construction of an element.

3.3.54 Hardware. Nonfabric components of the protective clothing and equipment including, but not limited to, those made of metal or plastic.

3.3.55 Hazardous Materials Emergencies. Incidents involving the release or potential release of hazardous materials.

3.3.56 Headband. The portion of the helmet suspension that encircles the head.

3.3.57 Headform. A device that simulates the configuration of the human head.

3.3.58 Helmet. See 3.3.126, Structural Fire Fighting Protective Helmet, and 3.3.100, Proximity Fire Fighting Protective Helmet.

3.3.59 Hood. See 3.3.127, Structural Fire Fighting Protective Hood.

3.3.60 Inherent Flame Resistance. Flame resistance that is derived from the essential characteristic of the fiber or polymer.

3.3.61 Insole. The inner component of the footwear upon which the foot rests.

3.3.62 Interface Area. An area of the body where the protective garments, helmet, gloves, footwear, or SCBA facepiece meet. Interface areas include, but are not limited to, the coat/helmet/SCBA facepiece area, the coat/trouser area, the coat/glove area, and the trouser/footwear area.

Copyright National Fire Protection Association
Provided by IHS under license with NFPA
No reproduction or networking permitted without license from IHS
Not for Resale

3.3.63 Interface Component(s). Any material, part, or subassembly used in the construction of the compliant product that provides limited protection to interface areas.

3.3.64 Ladder Shank. See 3.3.114, Shank.

3.3.65 Liquid Borne Pathogen. See 3.3.7, Body Fluid-Borne Pathogen.

3.3.66 Lower Torso. The area of the body trunk below the waist, excluding the legs, ankles, and feet.

3.3.67 Major A Seam. See 3.3.111.2.

3.3.68 Major B Seam. See 3.3.111.3.

3.3.69 Manufacturer. The entity that directs and controls any of the following: compliant product design, compliant product manufacturing, or compliant product quality assurance; or the entity that assumes the liability for the compliant product or provides the warranty for the compliant product.

3.3.70 Melt. A response to heat by a material resulting in evidence of flowing or dripping.

3.3.71 Midsagittal Plane. The plane, perpendicular to the basic and coronal planes, that bisects the head symmetrically.

3.3.72 Minor Seam. See 3.3.111.4.

3.3.73 Model. The collective term used to identify a group of elements or items of the same basic design and components from a single manufacturer produced by the same manufacturing and quality assurance procedures that are covered by the same certification.

3.3.74 Moisture Barrier. The component of an element or item that principally prevents the transfer of liquids.

3.3.75 Nape Device. A component used to aid in helmet retention.

3.3.76 Outer Shell. The outermost component of an element or item not including trim, hardware, reinforcing material, pockets, wristlet material, accessories, fittings, or suspension systems.

3.3.77* Particulates. Finely divided solid matter that is dispersed in air.

3.3.78 Percent Inward Leakage. The ratio of vapor concentration inside the ensemble versus the vapor concentration outside the ensemble expressed as a percentage.

3.3.79 Product Label. A marking provided by the manufacturer for each compliant product containing compliant statements, certification statements, manufacturer or model information, or similar data. The product label is not the certification organization's label, symbol, or identifying mark; however, the certification organization's label, symbol, or identifying mark is attached to or part of the product label.

3.3.80 Protective Clothing. See 3.3.121, Structural Fire Fighting Protective Ensembles, and 3.3.95, Proximity Fire Fighting Protective Ensemble.

3.3.81 Protective Coat. See 3.3.119, Structural Fire Fighting Protective Coat, and 3.3.93, Proximity Fire Fighting Protective Coat.

3.3.82 Protective Coverall. See 3.3.120, Structural Fire Fighting Protective Coverall, and 3.3.94, Proximity Fire Fighting Protective Coverall.

3.3.83 Protective Ensemble. See 3.3.121, Structural Fire Fighting Protective Ensemble, and 3.3.95, Proximity Fire Fighting Protective Ensemble.

3.3.84 Protective Footwear. See 3.3.123, Structural Fire Fighting Protective Footwear, and 3.3.97, Proximity Fire Fighting Protective Footwear.

3.3.85 Protective Garment. See 3.3.124, Structural Fire Fighting Protective Garments, and 3.3.98, Proximity Fire Fighting Protective Garments.

3.3.86 Protective Gloves. See 3.3.125, Structural Fire Fighting Protective Glove, and 3.3.99, Proximity Fire Fighting Protective Glove.

3.3.87 Protective Helmet. See 3.3.126, Structural Fire Fighting Protective Helmet, and 3.3.100, Proximity Fire Fighting Protective Helmet.

3.3.88 Protective Hood. See 3.3.127, Structural Fire Fighting Protective Hood.

3.3.89 Protective Trousers. See 3.3.128, Structural Fire Fighting Protective Trousers, and 3.3.102, Proximity Fire Fighting Protective Trousers.

3.3.90 Protective Wristlet. See 3.3.143, Wristlet.

3.3.91* Proximity Fire Fighting. Specialized fire fighting operations that can include the activities of rescue, fire suppression, and property conservation at incidents involving fires producing high levels of radiant heat as well as conductive and convective heat.

3.3.92 Proximity Fire Fighting Protective Clothing. See 3.3.95, Proximity Fire Fighting Protective Ensemble.

3.3.93 Proximity Fire Fighting Protective Coat. The element of the protective ensemble that provides protection to upper torso and arms, excluding the hands and head.

3.3.94 Proximity Fire Fighting Protective Coverall. The element of the protective ensemble that provides protection to the torso, arms, and legs, excluding the head, hands, and feet.

3.3.95 Proximity Fire Fighting Protective Ensemble. Multiple elements of compliant protective clothing and equipment that when worn together provide protection from some risks, but not all risks, of emergency incident operations.

3.3.96 Proximity Fire Fighting Protective Ensemble with Optional CBRN Terrorism Agent Protection. A compliant proximity fire fighting protective ensemble that is also certified as an entire ensemble to meet the optional requirements for protection from specific chemical, biological, and radiological particulate terrorism agents.

3.3.97 Proximity Fire Fighting Protective Footwear. The element of the protective ensemble that provides protection to the foot, ankle, and lower leg.

3.3.98 Proximity Fire Fighting Protective Garment. The coat, trouser, and coverall elements of the protective ensemble.

3.3.99 Proximity Fire Fighting Protective Glove. The element of the protective ensemble that provides protection to the hand and wrist.

3.3.100 Proximity Fire Fighting Protective Helmet. The element of the protective ensemble that provides protection to the head.

Copyright National Fire Protection Association
Provided by IHS under license with NFPA
No reproduction or networking permitted without license from IHS
Not for Resale

3.3.101 Proximity Fire Fighting Protective Shroud. The component of the helmet element that provides limited protection to the helmet/coat/SCBA interface area.

3.3.102 Proximity Fire Fighting Protective Trousers. The element of the protective ensemble that provides protection to the lower torso and legs, excluding the ankles and feet.

3.3.103 Puncture-Resistant Device. A reinforcement to the bottom of protective footwear that is designed to provide puncture resistance.

3.3.104* Radiological Particulate Terrorism Agents. Particles that emit ionizing radiation in excess of normal background levels, used to inflict lethal or incapacitating casualties, generally on a civilian population, as a result of terrorist attack.

3.3.105 Recall System. Procedures by which a manufacturer identifies a product, provides notice or safety alert, and repairs or withdraws the product as the corrective action.

3.3.106 Reference Plane. A dimensionally defined plane parallel to the basic plane that is measured from the top of the applicable headform or the basic plane.

3.3.107 Retention System. The complete assembly by which the helmet is retained in position on the head.

3.3.108 Retroreflection/Retroflective. The reflection of light in which the reflected rays are preferentially returned in the direction close to the opposite of the direction of the incident rays, with this property being maintained over wide variations of the direction of the incident rays.

3.3.109 Retroreflective Markings. A material that reflects and returns a relatively high proportion of light in a direction close to the direction from which it came.

3.3.110 Sample. (1) The ensemble, element, component, or composite that is conditioned for testing. (2) Ensembles, elements, items, or components that are randomly selected from the manufacturer's production line, from the manufacturer's inventory, or from the open market.

3.3.111 Seam. Any permanent attachment of two or more materials in a line formed by joining the separate material pieces.

3.3.111.1 ***Major Seam.*** Seam assemblies where rupture exposes the wearer to immediate danger.

3.3.111.2* ***Major A Seam.*** Outermost layer seam assemblies where rupture could reduce the protection of the garment by exposing the garment's inner layers.

3.3.111.3 ***Major B Seam.*** Inner layer seam assemblies where rupture could reduce the protection of the garment by exposing the next layer of the garment, the wearer's station/work uniform, other clothing, or skin.

3.3.111.4 ***Minor Seam.*** Remaining seam assemblies that are not classified as Major, Major A, or Major B seams.

3.3.112 Seam Assembly. The structure obtained when materials are joined by means of a seam.

3.3.113 Separate/Separation. A material response evidenced by splitting or delaminating.

3.3.114 Shank. The component of footwear that provides additional support to the instep.

3.3.115 Shell. See 3.3.76, Outer Shell.

3.3.116 Specimen. The conditioned ensemble, element, item, or component that is tested. Specimens are taken from samples. *(See also 3.3.110, Sample.)*

3.3.117 Structural Fire Fighting. The activities of rescue, fire suppression, and property conservation in buildings, enclosed structures, vehicles, marine vessels, or like properties that are involved in a fire or emergency situation.

3.3.118 Structural Fire Fighting Protective Clothing. See 3.3.121, Structural Fire Fighting Protective Ensemble.

3.3.119 Structural Fire Fighting Protective Coat. The element of the protective ensemble that provides protection to the upper torso and arms, excluding the hands and head.

3.3.120 Structural Fire Fighting Protective Coverall. The element of the protective ensemble that provides protection to the torso, arms, and legs, excluding the head, hands, and feet.

3.3.121* Structural Fire Fighting Protective Ensemble. Multiple elements of compliant protective clothing and equipment that when worn together provide protection from some risks, but not all risks, of emergency incident operations.

3.3.122 Structural Fire Fighting Protective Ensemble with Optional CBRN Terrorism Agent Protection. A compliant structural fire fighting protective ensemble that is also certified as an entire ensemble to meet the optional requirements for protection from specific chemical, biological, and radiological particulate terrorism agents.

3.3.123 Structural Fire Fighting Protective Footwear. The element of the protective ensemble that provides protection to the foot, ankle, and lower leg.

3.3.124 Structural Fire Fighting Protective Garment(s). The coat, trouser, and coverall elements of the protective ensemble.

3.3.125 Structural Fire Fighting Protective Glove. The element of the protective ensemble that provides protection to the hand and wrist.

3.3.126 Structural Fire Fighting Protective Helmet. The element of the protective ensemble that provides protection to the head.

3.3.127 Structural Fire Fighting Protective Hood. The interface element of the protective ensemble that provides limited protection to the coat/helmet/SCBA facepiece interface area.

3.3.128 Structural Fire Fighting Protective Trousers. The element of the protective ensemble that provides protection to the lower torso and legs, excluding the ankles and feet.

3.3.129 Suspension. The energy-attenuating system of the helmet that is made up of the headband and crown strap.

3.3.130 Sweatband. That part of a helmet headband, either integral or attached, that comes in contact with the wearer's forehead.

3.3.131 Textile Fabric. A planar structure consisting of yarns or fibers.

3.3.132 Thermal Barrier. The component of an element or item that principally provides thermal protection.

3.3.133 Toecap. A reinforcement to the toe area of footwear designed to protect the toes from impact and compression.

3.3.134 Top. The intersection between the midsagittal plane and the coronal plane extended to the helmet surface.

--`,,```,,,,````-`-`,,`,,`,`,,`---

Copyright National Fire Protection Association
Provided by IHS under license with NFPA
No reproduction or networking permitted without license from IHS
Not for Resale

3.3.135 Top Line. The top edge of the protective footwear that includes the tongue, gusset, quarter, collar, and shaft.

3.3.136 Toxic Industrial Chemicals. Highly toxic solid, liquid, or gaseous chemicals that have been identified as mass casualty threats that could be used to inflict casualties, generally on a civilian population, during a terrorist attack.

3.3.137 Trim. Retroreflective and fluorescent materials attached to the outermost surface of the protective ensemble for visibility enhancement. Retroreflective materials enhance nighttime visibility, and fluorescent materials enhance daytime visibility. "Trim" is also known as "visibility markings."

3.3.138 Trouser. See 3.3.128, Structural Fire Fighting Protective Trousers, and 3.3.102, Proximity Fire Fighting Protective Trousers.

3.3.139* Upper. The part of the protective footwear including, but not limited to, the toe, vamp, quarter, shaft, collar, and throat, but excluding the sole with heel, puncture-resistant device, and insole.

3.3.140 Upper Torso. The area of body trunk above the waist and extending to the shoulder, excluding the arms and wrists, and hands.

3.3.141 Wear Surface. The bottom of the footwear sole, including the heel.

3.3.142 Winter Liner. An optional component layer that provides added insulation against cold.

3.3.143 Wristlet. The interface component of the protective element or item that provides limited protection to the protective coat/glove interface area.

Chapter 4 Certification

4.1 General.

4.1.1 The process of certification for product as being compliant with NFPA 1971 shall meet the requirements of Section 4.1, General; Section 4.2, Certification Program; Section 4.3, Inspection and Testing; Section 4.4, Recertification; Section 4.5, Manufacturers' Quality Assurance Program; Section 4.6, Hazards Involving Compliant Product; Section 4.7, Manufacturers' Investigation of Complaints and Returns; and Section 4.8, Manufacturers' Safety Alert and Product Recall Systems.

4.1.2 All compliant product that are labeled as being compliant with this standard shall meet or exceed all applicable requirements specified in this standard and shall be certified.

4.1.2.1 The certification organization shall only permit the certification of complete protective ensembles, which include protective garments, protective helmet, protective gloves, protective footwear, interface components where necessary for certification, and protective hood where the hood is not part of the protective garments, to the optional requirements for protection against CBRN terrorism agents.

4.1.2.2 The certification organization shall further require that the protective ensemble manufacturer specify the respiratory protection component of the ensemble by manufacturer, type, and model in order for the ensembles to be certified to the optional requirements for protection against CBRN terrorism agents.

4.1.2.3 The respiratory protection shall be a specific model self-contained breathing apparatus (SCBA) that is certified as compliant with NFPA 1981, *Standard on Open-Circuit Self-Contained Breathing Apparatus for Fire and Emergency Services*, and also certified by NIOSH as CBRN SCBA compliant with the Statement of Standard for NIOSH *Chemical, Biological, Radiological, and Nuclear (CBRN) Standard on Open-Circuit, Pressure-Demand, Self-Contained Breathing Apparatus*.

4.1.3 All certification shall be performed by a certification organization that meets at least the requirements specified in Section 4.2, Certification Program, and that is accredited for personal protective equipment in accordance with ISO Guide 65, *General requirements for bodies operating product certification systems*. The accreditation shall be issued by an accreditation body operating in accordance with ISO 17011, *General requirements for accreditation bodies accrediting conformity assessment bodies*.

4.1.4* Manufacturers shall not claim compliance with portions or segments of the requirements of this standard and shall not use the NFPA name or the name or identification of this standard, NFPA 1971, in any statements about their respective products unless the products are certified as compliant to this standard.

4.1.5 All compliant products shall be labeled and listed.

4.1.6 All compliant products shall also have a product label that meets the requirements specified in Section 5.1, Product Label Requirements.

4.1.7 The certification organization's label, symbol, or identifying mark shall be part of the product label, shall be attached to the product label, or shall be immediately adjacent to the product label.

4.1.8 The certification organization shall not issue any new certifications to the 2000 editions of NFPA 1971, *Standard on Protective Ensembles for Structural Fire Fighting and Proximity Fire Fighting*, and NFPA 1976, *Standard on Protective Ensemble for Proximity Fire Fighting*, on or after the NFPA effective date for the 2007 edition which is 17 August 2006.

4.1.9 The certification organization shall not permit any manufacturer to continue to label any products that are certified as compliant with the 2000 editions of NFPA 1971, *Standard on Protective Ensembles for Structural Fire Fighting and Proximity Fire Fighting*, and NFPA 1976, *Standard on Protective Ensemble for Proximity Fire Fighting*, on or after 1 March 2007.

4.1.10 The certification organization shall require manufacturers to remove all certification labels and product labels indicating compliance with the 2000 editions of NFPA 1971, *Standard on Protective Ensembles for Structural Fire Fighting and Proximity Fire Fighting*, and NFPA 1976, *Standard on Protective Ensemble for Proximity Fire Fighting*, from all products that are under the control of the manufacturer on 1 March 2007, and the certification organization shall verify this action is taken.

4.2 Certification Program.

4.2.1* The certification organization shall not be owned or controlled by manufacturers or vendors of the product being certified.

4.2.2 The certification organization shall be primarily engaged in certification work and shall not have a monetary interest in the product's ultimate profitability.

4.2.3 The certification organization shall be accredited for personal protective equipment in accordance with ISO Guide 65, *General requirements for bodies operating product certification systems*.

Copyright National Fire Protection Association
Provided by IHS under license with NFPA
No reproduction or networking permitted without license from IHS
Not for Resale

The accreditation shall be issued by an accreditation body operating in accordance with ISO 17011, *General requirements for accreditation bodies accrediting conformity assessment bodies*.

4.2.4 The certification organization shall refuse to certify products to this standard that do not comply with all applicable requirements of this standard.

4.2.5* The contractual provisions between the certification organization and the manufacturer shall specify that certification is contingent on compliance with all applicable requirements of this standard.

4.2.5.1 The certification organization shall not offer or confer any conditional, temporary, or partial certifications.

4.2.5.2 Manufacturers shall not be authorized to use any label or reference to the certification organization on products that are not compliant with all applicable requirements of this standard.

4.2.6* The certification organization shall have laboratory facilities and equipment available for conducting proper tests to determine product compliance.

4.2.6.1 The certification organization laboratory facilities shall have a program in place and functioning for calibration of all instruments, and procedures shall be in use to ensure proper control of all testing.

4.2.6.2 The certification organization laboratory facilities shall follow good practice regarding the use of laboratory manuals, form data sheets, documented calibration and calibration routines, performance verification, proficiency testing, and staff qualification and training programs.

4.2.7 The certification organization shall require the manufacturer to establish and maintain a quality assurance program that meets the requirements of Section 4.5, Manufacturers' Quality Assurance Program.

4.2.7.1* The certification organization shall require the manufacturer to have a product recall system specified in Section 4.8, Manufacturers' Safety Alert and Product Recall Systems, as part of the manufacturer's quality assurance program.

4.2.7.2 The certification organization shall audit the manufacturer's quality assurance program to ensure that the quality assurance program provides continued product compliance with this standard.

4.2.8 The certification organization and the manufacturer shall evaluate any changes affecting the form, fit, or function of the compliant product to determine its continued certification to this standard.

4.2.9* The certification organization shall have a follow-up inspection program of the manufacturer's facilities of the compliant product with at least two random and unannounced visits per 12-month period to verify the product's continued compliance.

4.2.9.1 As part of the follow-up inspection program, the certification organization shall select sample compliant product at random from the manufacturer's production line, from the manufacturer's in-house stock, or from the open market.

4.2.9.2 Sample product shall be evaluated by the certification organization to verify the product's continued compliance in order to assure that the materials, components, and manufacturing quality assurance systems are consistent with the materials, components, and manufacturing quality assurance that were inspected and tested by the certification organization during initial certification and recertification.

4.2.9.3 The certification organization shall be permitted to conduct specific testing to verify the product's continued compliance.

4.2.9.4 For products, components, and materials where prior testing, judgment, and experience of the certification organization have shown results to be in jeopardy of not complying with this standard, the certification organization shall conduct more frequent testing of sample product, components, and materials acquired in accordance with 4.2.9.1 against the applicable requirements of this standard.

4.2.10 The certification organization shall have in place a series of procedures, as specified in Section 4.6, Hazards Involving Compliant Product, that address reports of situations in which a compliant product is subsequently found to be hazardous.

4.2.11 The certification organization's operating procedures shall provide a mechanism for the manufacturer to appeal decisions. The procedures shall include the presentation of information from both sides of a controversy to a designated appeals panel.

4.2.12 The certification organization shall be in a position to use legal means to protect the integrity of its name and label. The name and label shall be registered and legally defended.

4.3 Inspection and Testing.

4.3.1 For both initial certification and recertification of compliant products, the certification organization shall conduct both inspection and testing as specified in this section.

4.3.2 All inspections, evaluations, conditioning, and testing for certification or for recertification shall be conducted by a certification organization's testing laboratory that is accredited in accordance with the requirements of ISO 17025, *General requirements for the competence of testing and calibration laboratories*.

4.3.2.1 The certification organization's testing laboratory's scope of accreditation to ISO 17025, *General requirements for the competence of testing and calibration laboratories*, shall encompass testing of personal protective equipment.

4.3.2.2 The accreditation of a certification organization's testing laboratory shall be issued by an accreditation body operating in accordance with ISO 17011, *General requirements for accreditation bodies accrediting conformity assessment bodies*.

4.3.3 A certification organization shall be permitted to utilize conditioning and testing results conducted by a product or component manufacturer for certification or recertification provided the manufacturer's testing laboratory meets the requirements specified in 4.3.3.1 through 4.3.3.5.

4.3.3.1 The manufacturer's testing laboratory shall be accredited in accordance with the requirements of ISO 17025, *General requirements for the competence of testing and calibration laboratories*.

4.3.3.2 The manufacturer's testing laboratory's scope of accreditation to ISO 17025, *General requirements for the competence of testing and calibration laboratories*, shall encompass testing of personal protective equipment.

4.3.3.3 The accreditation of a manufacturer's testing laboratory shall be issued by an accreditation body operating in accordance with ISO 17011, *General requirements for accreditation bodies accrediting conformity assessment bodies*.

Copyright National Fire Protection Association
Provided by IHS under license with NFPA
No reproduction or networking permitted without license from IHS
Not for Resale

4.3.3.4 The certification organization shall approve the manufacturer's testing laboratory.

4.3.3.5 The certification organization shall determine the level of supervision and witnessing of the conditioning and testing for certification or recertification conducted at the manufacturer's testing laboratory.

4.3.4* Sampling levels for testing and inspection shall be established by the certification organization and the manufacturer to ensure a reasonable and acceptable reliability at a reasonable and acceptable confidence level that products certified to this standard are compliant, unless such sampling levels are specified herein.

4.3.4.1* For certification of structural fire fighting helmet elements, a test series shall consist of 14 helmets.

4.3.4.1.1 A minimum of three test series shall be required for certification.

4.3.4.1.2 Each helmet shall be subjected to the specified environmental conditioning and test or tests.

4.3.4.2* For certification of proximity fire fighting helmet elements, a test series shall consist of 14 helmets.

4.3.4.2.1 A minimum of three test series shall be required for certification.

4.3.4.2.2 Each helmet shall be subjected to the specified environmental conditioning and test or tests.

4.3.4.3* For certification of any ensembles with the optional CBRN requirements, the ensembles and components shall be subjected to the specified environmental conditioning and test or tests.

4.3.5 Inspection and evaluation by the certification organization shall include a review of all product labels to ensure that all required label attachments, compliance statements, certification statements, and other product information are at least as specified for the products identified in Section 5.1, Product Label Requirements for Both Ensembles, Section 5.2, Additional Product Label Requirements for Structural Fire Fighting Ensembles Only, and Section 5.3, Additional Product Label Requirements for Proximity Fire Fighting Ensembles Only.

4.3.6 Inspection and evaluation by the certification organization shall include an evaluation of any symbols and pictorial graphic representations used on product labels or in user information, as permitted in 5.1.5 to ensure that the symbols are clearly explained in the product's user information package.

4.3.7 Inspection and evaluation by the certification organization shall include a review of the user information required by Section 5.4, User Information, to ensure that the information has been developed and is available.

4.3.8 Inspection and evaluation by the certification organization for determining compliance with the design requirements specified in Chapter 6 shall be performed on whole or complete products.

4.3.9 Testing to determine product compliance with the performance requirements specified in Chapter 7 shall be conducted by the certification organization in accordance with the specified testing requirements of Chapter 8.

4.3.9.1 Testing shall be performed on specimens representative of materials and components used in the actual construction of the compliant product.

4.3.9.2 The certification organization also shall be permitted to use sample materials cut from a representative product.

4.3.10 The certification organization shall accept from the manufacturer, for evaluation and testing for certification, only product or product components that are the same in every respect to the actual final product or product component.

4.3.11 The certification organization shall not allow any modifications, pretreatment, conditioning, or other such special processes of the product or any product component prior to the product's submission for evaluation and testing by the certification organization.

4.3.12 The certification organization shall not allow the substitution, repair, or modification, other than as specifically permitted herein, of any product or any product component during testing.

4.3.13 The certification organization shall not allow test specimens that have been conditioned and tested for one method to be reconditioned and tested for another test method unless specifically permitted in the test method.

4.3.14 The certification organization shall test an ensemble element with the specific ensemble(s) with which it is to be certified.

4.3.15 Any change in the design, construction, or material of a compliant product shall necessitate new inspection and testing to verify compliance to all applicable requirements of this standard that the certification organization determines can be affected by such change. This recertification shall be conducted before labeling the modified product as being compliant with this standard.

4.3.16 The manufacturer shall maintain all design and performance inspection and test data from the certification organization used in the certification of the manufacturer's compliant product. The manufacturer shall provide such data, upon request, to the purchaser or authority having jurisdiction.

4.4 Recertification.

4.4.1 All individual elements of the protective ensemble that are labeled as being compliant with this standard shall undergo recertification on an annual basis. This recertification shall include the following:

(1) Inspection and evaluation to all design requirements as required by this standard on all manufacturer models and components.
(2) Testing to all performance requirements as required by this standard on all manufacturer models and components with the following protocol:
   (a) Where a test method incorporates testing both before and after laundering preconditioning specified in 8.1.2 and the test generates quantitative results, recertification testing shall be limited to the conditioning that yielded the worst-case test result during the initial certification for the model or component.
   (b) Where a test method incorporates testing both before and after laundering preconditioning specified in 8.1.2 and the test generates non-quantitative results (e.g., pass/fail for melt/drip), recertification shall be limited to a single conditioning procedure in any given year. Subsequent annual recertifications shall cycle through the remaining conditioning procedures to ensure that all required conditionings are included over time.

Copyright National Fire Protection Association
Provided by IHS under license with NFPA
No reproduction or networking permitted without license from IHS
Not for Resale

(c) Where a test method requires the testing of three specimens, a minimum of one specimen shall be tested for annual recertification.
(d) Where a test method requires the testing of five or more specimens, a minimum of two specimens shall be tested for annual recertification.

4.4.2 At least one sample of each compliant product and component shall be tested for overall performance as specified in Chapter 7 according to the following protocol:

(1) Where a test method incorporates testing both before and after laundering preconditioning specified in 8.1.2 and the test generates quantitative results, recertification testing shall be limited to the conditioning that yielded the worst-case test result during the initial certification for the model or component.
(2) Where a test method incorporates testing both before and after laundering preconditioning specified in 8.1.2 and the test generates non-quantitative results (e.g., pass/fail for melt/drip), recertification shall be limited to a single conditioning procedure in any given year. Subsequent annual recertifications shall cycle through the remaining conditioning procedures to ensure that all required conditionings are included over time.
(3) Where a test method requires the testing of less than five specimens, a minimum of one specimen shall be tested for annual recertification.
(4) Where a test method requires the testing of five or more specimens, a minimum of two specimens shall be tested for annual recertification.
(5) For CBRN protective ensembles, permeation testing shall be performed on all the specified chemicals each year.

4.4.3 Any change that affects the element's performance under the design or performance requirements of this standard shall constitute a different model.

4.4.4 For the purpose of this standard, models shall include each unique pattern, style, or design of the individual element.

4.4.5 Samples of manufacturer models and components for recertification shall be acquired as part of the follow-up program in accordance with 4.2.7 and shall be permitted to be used toward annual recertification.

4.4.6 The manufacturer shall maintain all design and performance inspection and test data from the certification organization used in the recertification of manufacturer models and components. The manufacturer shall provide such data, upon request, to the purchaser or authority having jurisdiction.

4.5 Manufacturers' Quality Assurance Program.

4.5.1 The manufacturer shall provide and operate a quality assurance program that meets the requirements of this section and that includes a product recall system as specified in 4.2.7.1 and Section 4.8, Manufacturers' Safety Alert and Product Recall Systems.

4.5.2 The operation of the quality assurance program shall evaluate and test compliant product production to the requirements of this standard to assure production remains in compliance.

4.5.3 The manufacturer shall be registered to ISO 9001, *Quality management systems — requirements*.

4.5.3.1 Registration to the requirements of ISO 9001, *Quality management systems — requirements*, shall be conducted by a registrar that is accredited for personal protective equipment in accordance with ISO Guide 62, *General requirements for bodies operating assessment and certification/registration of quality systems*. The registrar shall affix the accreditation mark on the ISO registration certificate.

4.5.3.2 The scope of the ISO registration shall include at least the design and manufacturing systems management for the type of personal protective equipment being certified.

4.5.4* Any entity that meets the definition of manufacturer specified in Section 3.3, and therefore is considered to be the "manufacturer" but does not manufacture or assemble the compliant product shall meet the requirements specified in Section 4.5.

4.5.5* Where the manufacturer uses subcontractors in the construction or assembly of the compliant product, the locations and names of all subcontractor facilities shall be documented and the documentation shall be provided to the manufacturer's ISO registrar and the certification organization.

4.6 Hazards Involving Compliant Product.

4.6.1 The certification organization shall establish procedures to be followed where situation(s) are reported in which a compliant product is subsequently found to be hazardous. These procedures shall comply with the provisions of ISO Guide 27, *Guidelines for corrective action to be taken by a certification body in the event of misuse of its mark of conformity*, and as modified herein.

4.6.2* Where a report of a hazard involved with a compliant product is received by the certification organization, the validity of the report shall be investigated.

4.6.3 With respect to a compliant product, a hazard shall be a condition or create a situation that results in exposing life, limb, or property to an imminently dangerous or dangerous condition.

4.6.4 Where a specific hazard is identified, the determination of the appropriate action for the certification organization and the manufacturer to undertake shall take into consideration the severity of the hazard and its consequences to the safety and health of users.

4.6.5 Where it is established that a hazard is involved with a compliant product, the certification organization shall determine the scope of the hazard including products, model numbers, serial numbers, factory production facilities, production runs, and quantities involved.

4.6.6 The certification organization's investigation shall include, but not be limited to, the extent and scope of the problem as it might apply to other compliant products or compliant product components manufactured by other manufacturers or certified by other certification organizations.

4.6.7 The certification organization shall also investigate reports of a hazard where compliant product is gaining widespread use in applications not foreseen when the standard was written, such applications in turn being ones for which the product was not certified, and no specific scope of application has been provided in the standard, and no limiting scope of application was provided by the manufacturer in written material accompanying the compliant product at the point of sale.

4.6.8 The certification organization shall require the manufacturer of the compliant product, or the manufacturer of the

Copyright National Fire Protection Association
Provided by IHS under license with NFPA
No reproduction or networking permitted without license from IHS
Not for Resale

compliant product component if applicable, to assist the certification organization in the investigation and to conduct its own investigation as specified in Section 4.7, Manufacturers' Investigation of Complaints and Returns.

4.6.9 Where the facts indicating a need for corrective action are conclusive and the certification organization's appeal procedures referenced in 4.2.11 have been followed, the certification organization shall initiate corrective action immediately, provided there is a manufacturer to be held responsible for such action.

4.6.10 Where the facts are conclusive and corrective action is indicated, but there is no manufacturer to be held responsible, such as when the manufacturer is out of business or the manufacturer is bankrupt, the certification organization shall immediately notify relevant governmental and regulatory agencies and issue a notice to the user community about the hazard.

4.6.11* Where the facts are conclusive and corrective action is indicated, the certification organization shall take one or more of the following corrective actions:

(1) Notification of parties authorized and responsible for issuing a safety alert when, in the opinion of the certification organization, such a notification is necessary to inform the users.
(2) Notification of parties authorized and responsible for issuing a product recall when, in the opinion of the certification organization, such a recall is necessary to protect the users.
(3) Removing the mark of certification from the product.
(4) Where a hazardous condition exists and it is not practical to implement 4.6.11(1), (2), or (3); or the responsible parties refuse to take corrective action; the certification organization shall notify relevant governmental and regulatory agencies and issue a notice to the user community about the hazard.

4.6.12 The certification organization shall provide a report to the organization or individual identifying the reported hazardous condition and notify them of the corrective action indicated or that no corrective action is indicated.

4.6.13* Where a change to an NFPA standard(s) is felt to be necessary, the certification organization shall also provide a copy of the report and corrective actions indicated to the NFPA and shall also submit either a Public Proposal for a proposed change to the next revision of the applicable standard or a proposed Temporary Interim Amendment (TIA) to the current edition of the applicable standard.

4.7 Manufacturers' Investigation of Complaints and Returns.

4.7.1 Manufacturers shall provide corrective action in accordance with ISO 9001, *Quality management systems — requirements*, for investigating written complaints and returned products.

4.7.2 Manufacturers' records of returns and complaints related to safety issues shall be retained for at least 5 years.

4.7.3 Where the manufacturer discovers, during the review of specific returns or complaints, that a compliant product or compliant product component can constitute a potential safety risk to end users that is possibly subject to a safety alert or product recall, the manufacturer shall immediately contact the certification organization and provide all information about their review to assist the certification organization with their investigation.

4.8 Manufacturers' Safety Alert and Product Recall Systems.

4.8.1 Manufacturers shall establish a written safety alert system and a written product recall system that describes the procedures to be used in the event that it decides, or is directed by the certification organization, to either issue a safety alert or to conduct a product recall.

4.8.2 The manufacturer safety alert and product recall system shall provide the following:

(1) The establishment of a coordinator and responsibilities by the manufacturer for the handling of safety alerts and product recalls
(2) A method of notifying all dealers, distributors, purchasers, users, and the NFPA about the safety alert or product recall that can be initiated within a 1 week period following the manufacturer decision to issue a safety alert or to conduct a product recall, or after the manufacturer has been directed by the certification organization to issue a safety alert or conduct a product recall
(3) Techniques for communicating accurately and understandably the nature of the safety alert or product recall and in particular the specific hazard or safety issue found to exist
(4) Procedures for removing product that is recalled and for documenting the effectiveness of the product recall
(5) A plan for either repairing, or replacing, or compensating purchasers for returned product

Chapter 5 Labeling and Information

5.1 Product Label Requirements for Both Ensembles.

5.1.1* Each element of both protective ensembles shall have at least one product label permanently and conspicuously located inside each element when the element is properly assembled with all layers and components in place.

5.1.2 Multiple label pieces shall be permitted in order to carry all statements and information required to be on the product label. However, all label pieces comprising the product label shall be located adjacent to each other.

5.1.3* The certification organization's label, symbol, or identifying mark shall be permanently attached to the product label or shall be part of the product label. All letters shall be at least 2.5 mm (3⁄32 in.) high. The label, symbol, or identifying mark shall be at least 6 mm (¼ in.) in height and shall be placed in a conspicuous location.

5.1.4 All worded portions of the required product label shall be printed at least in English.

5.1.5 Symbols and other pictorial graphic representations shall be permitted to be used to supplement worded statements on the product label(s).

5.1.6 The compliance statements specified in Section 5.2 for structural fire fighting protective ensemble elements and in Section 5.3 for proximity fire fighting protective ensemble elements shall be printed legibly on the product label.

5.1.7 The following information shall also be printed legibly on each product label with all letters at least 1.5 mm (1⁄16 in.) in height:

(1) Manufacturer's name, identification, or designation
(2) Manufacturer's address

Copyright National Fire Protection Association
Provided by IHS under license with NFPA
No reproduction or networking permitted without license from IHS
Not for Resale

(3) Country of manufacture
(4) Manufacturer's element identification number, lot number, or serial number
(5) Month and year of manufacture, not coded
(6) Model name, number, or design
(7) Size or size range
(8) Principle material(s) of construction
(9) Cleaning precautions

5.2 Additional Product Label Requirements for Structural Fire Fighting Ensemble Elements Only.

5.2.1 The following compliance statement shall be printed legibly on the product label for each structural fire fighting protective ensemble element, unless the requirements in 5.2.1.1 prevail. The appropriate term for the element type — garment, helmet, glove, footwear, hood — shall be inserted in the compliance statement text where indicated. All product label letters and figures shall be at least 2.5 mm (3⁄32 in.) in height.

"THIS STRUCTURAL FIRE FIGHTING PROTECTIVE (insert appropriate element term here) MEETS THE (insert appropriate element term here) REQUIREMENTS OF NFPA 1971, 2007 EDITION.

DO NOT REMOVE THIS LABEL."

5.2.1.1 Where an entire ensemble is also certified as compliant with the optional requirements for protection against CBRN terrorism agents, each element of the entire ensemble shall have at least the additional following compliance statement on the product label in place of the compliance statement specified in 5.2.1. The appropriate term for the element type — garment, helmet, glove, footwear, hood — shall be inserted in the compliance statement text where indicated. Other than the words "CBRN PROTECTIVE ENSEMBLE," all product label letters and figures shall be at least 2.5 mm (3⁄32 in.) in height. The letters of "CBRN PROTECTIVE ENSEMBLE" shall be at least 10 mm (3⁄8 in.) in height.

"CBRN PROTECTIVE ENSEMBLE

THIS ELEMENT IS NOT INTENDED AS PART OF A HAZARDOUS MATERIALS PROTECTIVE ENSEMBLE.

THIS STRUCTURAL FIRE FIGHTING PROTECTIVE (insert appropriate element term here) MEETS THE (insert appropriate element term here) REQUIREMENTS OF NFPA 1971, 2007 EDITION, AND THE OPTIONAL REQUIREMENTS FOR CBRN PROTECTION WHEN WORN TOGETHER WITH THE OTHER SPECIFIED ELEMENTS AND INTERFACE COMPONENTS OF THE ENSEMBLE.

DO NOT REMOVE THIS LABEL."

5.2.1.2 The garment element of the ensemble meeting the optional requirements for protection against CBRN terrorism agents shall list those items of the certified ensemble by manufacturer name and model number on the product label.

5.2.2 Where other protective item(s) or detachable components must be used with structural fire fighting protective ensemble elements in order for an element to be compliant with this standard, at least the following statement and information shall also be printed legibly on the product label. All letters shall be at least 2.5 mm (3⁄32 in.) high. The appropriate term for the element type — garment, helmet, glove, footwear, hood — shall be inserted in the statement text where indicated. Following this statement, the additional protective items or detachable components shall be listed by type, identification, and how properly assembled.

"FOR COMPLIANCE WITH THE STRUCTURAL FIRE FIGHTING (insert appropriate element term here) REQUIREMENTS OF NFPA 1971, THE FOLLOWING PROTECTIVE ITEMS MUST BE WORN IN CONJUNCTION WITH THIS (insert appropriate element term here):

(List additional items or detachable components here.)

DO NOT REMOVE THIS LABEL."

5.2.3 For helmets only, the helmet manufacturer shall place a unique manufacturer's part number, the symbol of the certification organization, and the words **"NFPA 1971, 2007 ED."** permanently on each replaceable performance critical part of the goggle lens or faceshield.

5.2.4 For hoods only, where the hood is designed to interface with a specific SCBA facepiece(s), the hood manufacturer shall add an item to the items specified in 5.1.7.

5.2.4.1 The hood manufacturer shall designate the specific SCBA facepiece(s), model(s) and size(s) in the new item of 5.1.7.

5.2.4.2 Where the hood is designed to be used with a specific SCBA facepiece(s), the hood manufacturer shall add to the hood product label the following statement:

"FOR COMPLIANCE WITH THE STRUCTURAL FIRE FIGHTING REQUIREMENTS OF NFPA 1971, THIS HOOD CAN ONLY BE USED WITH THE FOLLOWING NOTED SCBA FACEPIECE(S) [insert SCBA facepieces(s), model(s), and size(s) here]."

5.2.5 For garments only, the garment manufacturer shall place a manufacturer's identification number, lot number or serial number, the size or size range, the symbol of the certification organization, and the words **"NFPA 1971, 2007 ED."** on the drag rescue device (DRD).

5.3 Additional Product Label Requirements for Proximity Fire Fighting Ensemble Elements Only.

5.3.1 The following compliance statement shall be printed legibly on the product label for each proximity fire fighting protective ensemble element. The appropriate term for the element type — garment, helmet, glove, footwear, shroud — shall be inserted in the compliance statement text where indicated. All product label letters and figures shall be at least 2.5 mm (3⁄32 in.) in height.

"THIS PROXIMITY FIRE FIGHTING PROTECTIVE [insert appropriate element term here] MEETS THE [insert appropriate element term here] REQUIREMENTS OF NFPA 1971, 2007 EDITION.

DO NOT REMOVE THIS LABEL."

5.3.1.1 Where an entire ensemble is also certified as compliant the optional requirements for protection against CBRN terrorism agents, each element of the entire ensemble shall have at least the additional following compliance statement on the product label in place of the compliance statement specified in 5.3.1. The appropriate term for the element type — garment, helmet, glove, footwear, hood — shall be inserted in the compliance

Copyright National Fire Protection Association
Provided by IHS under license with NFPA
No reproduction or networking permitted without license from IHS
Not for Resale

statement text where indicated. With the exception of the words "CBRN Protective Ensemble," all product label letters and figures shall be at least 2.5 mm (3⁄32 in.) in height. The letters of "CBRN Protective Ensemble" shall be at least 10 mm (3⁄8 in.) in height.

"CBRN PROTECTIVE ENSEMBLE

THIS ELEMENT IS NOT INTENDED AS PART OF A HAZARDOUS MATERIALS PROTECTIVE ENSEMBLE.

THIS PROXIMITY FIRE FIGHTING PROTECTIVE (insert appropriate element term here) MEETS THE (insert appropriate element term here) REQUIREMENTS OF NFPA 1971, 2007 EDITION, AND THE OPTIONAL REQUIREMENTS FOR CBRN PROTECTION, WHEN WORN TOGETHER WITH THE OTHER SPECIFIED ELEMENTS AND INTERFACE COMPONENTS OF THE ENSEMBLE.

DO NOT REMOVE THIS LABEL."

5.3.1.2 The garment element of the ensemble meeting the optional requirements for protection against CBRN terrorism agents shall list those items of the certified ensemble by manufacturer name and model number on the product label.

5.3.2 Where other protective item(s) or detachable components must be used with proximity fire fighting protective ensemble elements in order for an element to be compliant with this standard, at least the following statement and information shall also be printed legibly on the product label. All letters shall be at least 2.5 mm (3⁄32 in.) high. The appropriate term for the element type — garment, helmet, glove, footwear, shroud — shall be inserted in the statement text where indicated. Following this statement, the additional protective items or detachable components shall be listed by type, identification, and how properly assembled.

"FOR COMPLIANCE WITH THE PROXIMITY FIRE FIGHTING (insert appropriate element term here) REQUIREMENTS OF NFPA 1971, THE FOLLOWING PROTECTIVE ITEMS MUST BE WORN IN CONJUNCTION WITH THIS (insert appropriate element term here):

(List additional items or detachable components here.)

DO NOT REMOVE THIS LABEL."

5.3.3 For helmets only, the helmet manufacturer shall place a unique manufacturer's part number, the symbol of the certification organization, and the words **"NFPA 1971, 2007 ED."** permanently on each replaceable performance critical part of the faceshield.

5.3.4 For the helmet shroud only, the manufacturer shall add the following statement to the shroud product label:

"**FOR COMPLIANCE WITH THE PROXIMITY FIRE FIGHTING REQUIREMENTS OF NFPA 1971, THIS SHROUD CAN ONLY BE USED WITH THE FOLLOWING NOTED HELMET(S): (insert helmet manufacturer's name and specific helmet model here)."**

5.3.5 For garments only, the garment manufacturer shall place a manufacturer's identification number, lot number or serial number, the size or size range, the symbol of the certification organization, and the words "**NFPA 1971, 2007 ED**." on the DRD.

5.4 User Information Requirements for Both Ensembles.

5.4.1 The manufacturer shall provide at least the user information that is specified in 5.4.4 with each structural and proximity fire fighting element.

5.4.2 The manufacturer shall attach the required user information, or packaging containing the user information, to the element in such a manner that it is not possible to use the element without being aware of the availability of the information.

5.4.3 The required user information, or packaging containing the user information, shall be attached to the element so that a deliberate action is necessary to remove it. The manufacturer shall provide notice that the user information is to be removed only by the end user.

5.4.4* The manufacturer shall provide at least the following instructions and information with each element:

(1) Pre-use information
   (a) Safety considerations
   (b) Limitations of use
   (c) Marking recommendations and restrictions
   (d) A statement that most performance properties of the element cannot be tested by the user in the field
   (e) Warranty information
(2) Preparation for use
   (a) Sizing/adjustment
   (b) Recommended storage practices
(3) Inspection frequency and details
(4) Don/doff
   (a) Donning and doffing procedures
   (b) Sizing and adjustment procedures
   (c) Interface issues
(5) Proper use consistent with NFPA 1500, *Standard on Fire Department Occupational Safety and Health Program*, and 29 CFR 1910.132, General Requirements of Subpart I, "Personal Protective Equipment"
(6) Maintenance and cleaning
   (a) Cleaning instructions and precautions with a statement advising users not to use an element that is not thoroughly cleaned and dried
   (b) Inspection details
   (c) Maintenance criteria and methods of repair where applicable
   (d) Decontamination procedures for both chemical and biological contamination
(7) Retirement and disposal criteria and considerations

5.4.5 For the DRD only, the manufacturer shall provide specific information on the use, inspection, maintenance, cleaning, and retirement of the DRD.

5.4.6 For footwear only, the manufacturer shall establish and provide, upon request, a size conversion chart for each model or style footwear element based on toe length, arch length, and foot width as measured on a Brannock Scientific Foot Measuring Device.

Copyright National Fire Protection Association
Provided by IHS under license with NFPA
No reproduction or networking permitted without license from IHS
Not for Resale

5.4.7 For protective ensembles certified to the optional CBRN requirements, the manufacturer shall provide the following additional instruction and information with the ensemble:

(1) A statement that only the ensemble and the specific elements with which the ensemble has been certified must be worn together to ensure that the optional CBRN protection is provided.
(2) A list of the specific elements and interface components that must be worn as part of the CBRN ensemble, including each type of CBRN SCBA that the ensemble has been certified with.
(3) Specific limitations associated with the use of the ensemble for a response involving CBRN hazards, including but not limited to a statement that protection against radiological and nuclear hazards is limited to particulates only.
(4) Specific care and maintenance provisions associated with properly maintaining the unique performance properties of the ensemble, its elements, or interface components.
(5) A statement that if the ensemble is used in an emergency involving CBRN hazards that the ensemble be retired from use and not be further used.
(6) When the optional requirements for CBRN protection necessitate a specific action to engage interface areas, the manufacturer shall provide details explaining those procedures.

Chapter 6 Design Requirements

6.1* Protective Garment Element Design Requirements for Both Ensembles.

6.1.1 Protective garment elements shall have at least the applicable design requirements specified in this section where inspected and evaluated by the certification organization as specified in Section 4.3, Inspection and Testing.

6.1.1.1 For coveralls, the portion of the coverall that corresponds to the coat shall meet all garment requirements and all requirements specified for coat elements of this section.

6.1.1.2 For coveralls, the portion of the coverall that corresponds to the trouser shall meet all garment requirements and all requirements specified for trouser elements of this section.

6.1.2* Garments shall consist of a composite of an outer shell, moisture barrier, and thermal barrier.

6.1.2.1 The composite specified in 6.1.2 shall be permitted to be configured as a single layer or multiple layers.

6.1.2.2 Supplemental garments that are provided to meet the performance requirements of this standard but are not intended to be worn continuously with the wearing of the garment element shall not be permitted.

6.1.3* Garments shall have a means of securing the moisture barrier and thermal barrier to the outer shell.

6.1.4 Garment moisture barriers and thermal barriers, or materials meeting the performance requirements of these components, shall extend at least to the neckline seam of coats, at least to the waistline seam of trousers, and shall extend at least to within 75 mm (3 in.) of the bottom outer shell hems of both coats and trousers.

6.1.4.1 For coats, the moisture barriers and thermal barriers, or materials meeting the performance requirements of these components, shall extend at least to within 25 mm (1 in.) of the sleeve ends of the outer shell and shall be attached at or adjacent to the end of the coat sleeves, unless those barrier layers terminate as a glove interface device that provides continuous thermal protection.

6.1.4.2 For trousers, moisture barriers and thermal barriers, or materials meeting the performance requirements of these components, shall be attached to the trouser legs, unless those barrier layers terminate in booties.

6.1.4.3 Any mechanism used to attach the liner system to the coat sleeves or trouser legs shall not be greater than 25 mm (1 in.) between the attachment points, and the mechanism and attachment points shall not be expandable.

6.1.5 Garments and their closure systems, including the coat front and the trouser fly, shall be constructed in a manner that provides continuous moisture and thermal protection.

6.1.5.1 Such closure systems shall be secured with positive locking fasteners including, but not limited to, hooks and dees or zippers.

6.1.5.2 Nonpositive fasteners, such as snaps or hook and pile tape, shall not be used as positive locking fasteners but shall be permitted to be utilized as supplementary garment closure devices.

6.1.5.3 Snaps shall be Style 2 and shall comply with the design and construction requirements of MIL-F-10884F. The construction of the snap shall be permitted to vary from the MIL-F-10884F drawings with regard to the attachment means and use of logos on the caps.

6.1.5.4 Zippers shall meet the physical performance requirements of A-A-55634, *Commercial Item Description, Zippers (Fasteners, Slide, Interlocking).*

6.1.5.5 Hooks and dees shall be nonferrous. Hooks shall be inward facing and shall have at least three attachment points. Dees shall have at least two attachment points.

6.1.5.6 Aramid hook and pile fastener tapes shall not be permitted.

6.1.6 All garment hardware finishes shall be free of rough spots, burrs, or sharp edges.

6.1.7 All sewing thread utilized in the construction of garments and the DRDs shall be made of an inherently flame-resistant fiber.

6.1.8* Garment cargo pockets, where provided, shall have a means to drain water and shall have a means of fastening in the closed position.

6.1.9 Coats shall be designed to provide protection to the upper torso, neck, arms, and wrists, excluding the hands and head.

6.1.9.1 Each coat element shall have a DRD installed in the upper torso portion of the element.

6.1.9.1.1 The DRD shall be accessible from the exterior of the garment.

6.1.9.1.2 The DRD shall be easily accessible for deployment, shall be designed to minimize the risk of accidental deployment, and shall allow for visual inspection.

6.1.9.1.3 The DRD shall be fully functional and shall not require any subsequent actions in order to be used, other than

Copyright National Fire Protection Association
Provided by IHS under license with NFPA
No reproduction or networking permitted without license from IHS
Not for Resale

deploying the DRD, when the garment is donned in accordance with the manufacturer's instructions.

6.1.9.1.4 The DRD shall be designed to allow deployment and operation of the DRD while the incapacitated fire fighter is wearing an SCBA.

6.1.9.1.5 The DRD shall be designed so that when deployed, the DRD secures the fire fighter by the upper torso or shoulders so that the DRD pulls directly on the body and shall not pull only the garment.

6.1.9.2* Each coat sleeve shall have a protective wristlet or other interface component permanently attached to the coat sleeve.

6.1.9.2.1 The wristlet or other garment sleeve interface component shall be designed so that it will not permit a gap in thermal protection.

6.1.9.2.2 The wristlet or other garment sleeve interface component shall meet the requirements specified in Section 6.16, Protective Wristlet Interface Component Design Requirements for Both Ensembles.

6.1.9.3 Coats shall have a composite collar at least 75 mm (3 in.) in height at any point when measured from the top of the collar down.

6.1.9.3.1 The collar shall incorporate a closure system.

6.1.9.3.2 The collar and closure system shall consist of an outer shell, a moisture barrier, and a thermal barrier, or of a composite that meets all applicable performance requirements specified in Section 7.1, Protective Garment Performance Requirements for Both Ensembles.

6.1.9.3.3 Where a hood is permanently attached to the coat, a collar shall not be required.

6.1.9.3.4 Where a hood is permanently attached to the coat, it shall meet the requirement of 6.1.9.3.1 and at least the bottom 75 mm (3 in.) of the hood shall meet the requirement of 6.1.9.3.2.

6.1.9.4 Coat hardware shall not penetrate through the outer shell, moisture barrier, and thermal barrier to contact the wearer's body when the coat is worn with the closures fastened, unless the hardware is completely covered by external closure flaps.

6.1.10 Trousers shall be designed to provide protection to the lower torso and legs, excluding the ankles and feet.

6.1.10.1 Trousers shall be permitted to include integrated booties to protect the wearer's feet in conjunction with outer footwear.

6.1.10.2 Where trousers incorporate booties, the booties shall be designed as an extension of the trouser leg and shall cover the entire foot and ankle.

6.1.10.3 Trouser hardware shall not penetrate through the outer shell, moisture barrier, and thermal barrier to come into contact with the wearer's body when the trouser is worn with the closures fastened, unless the hardware is located on or above the waistline or hardware is completely covered by external closure flaps.

6.1.11* In order to label a coat, trouser, or coverall as compliant with this standard, the manufacturer shall provide coats, trousers, or coveralls in the size ranges specified in Table 6.1.11.

6.1.11.1 The sizing increments for the ranges specified in Table 6.1.11 for men's and women's chest sizes shall be in increments no greater than 50 mm (2 in.), sleeve lengths shall be in increments no greater than 25 mm (1 in.), men's and women's waist sizes shall be in increments no greater than 50 mm (2 in.), and inseam lengths shall be in increments no greater than 50 mm (2 in.).

6.1.11.2 Men's and women's sizing shall be accomplished by men's and women's individual patterns.

6.2 Additional Design Requirements for Structural Fire Fighting Protective Garment Elements Only.

6.2.1 Structural fire fighting protective garment elements shall also have at least the applicable design requirements specified in this section in addition to the design requirements specified in Section 6.1, Protective Garment Element Design Requirements for Both Ensembles, where inspected and evaluated by the certification organization as specified in Section 4.3, Inspection and Testing.

6.2.2* Garments shall have fluorescent and retroreflective trim permanently attached to the outer shells of garments to meet visibility requirements.

6.2.2.1 Trim shall be at least 50 mm (2 in.) wide and shall have both retroreflective and fluorescent surfaces.

6.2.2.2 The retroreflective surface of trim shall be at least 16 mm (⅝ in.) wide.

6.2.2.3 Trim used to meet the minimum trim pattern requirements shall have a minimum fluorescent surface of 50 mm^2/linear mm (2 $in.^2$/linear in.) of trim.

6.2.2.4 The fluorescent and retroreflective areas of trim specified in 6.2.2.2 and 6.2.2.3 shall appear to be continuous at a distance of 30.5 m (100 ft) for the length of the trim, with gaps of not more than 3 mm (⅛ in.).

Table 6.1.11 Available Coat/Trouser Size Ranges

	Men		Women		Increment	
Dimension	mm	in.	mm	in.	mm	in.
Chest	865–1525	34–60	710–1270	28–50	50	2
Sleeve	820–965	32–38	710–865	28–34	25	1
Waist	760–1525	30–60	710–1270	28–50	50	2
Inseam	660–915	26–36	610–865	24–34	50	2

Copyright National Fire Protection Association
Provided by IHS under license with NFPA
No reproduction or networking permitted without license from IHS
Not for Resale

6.2.2.5 Trim used in excess of that required by the minimum trim pattern requirements specified and illustrated in Figure 6.2.3 shall be permitted to not meet the minimum fluorescent surface of 50 mm^2/linear mm (2 $in.^2$/linear in.) of trim and shall be permitted to be obscured by components including but not limited to pockets, storm flaps, and reinforcing patches as long as the minimum trim pattern is not obscured.

6.2.3* Coat trim configuration shall be in accordance with Figure 6.2.3. No vertical stripes of trim shall be permitted on the front of the coat.

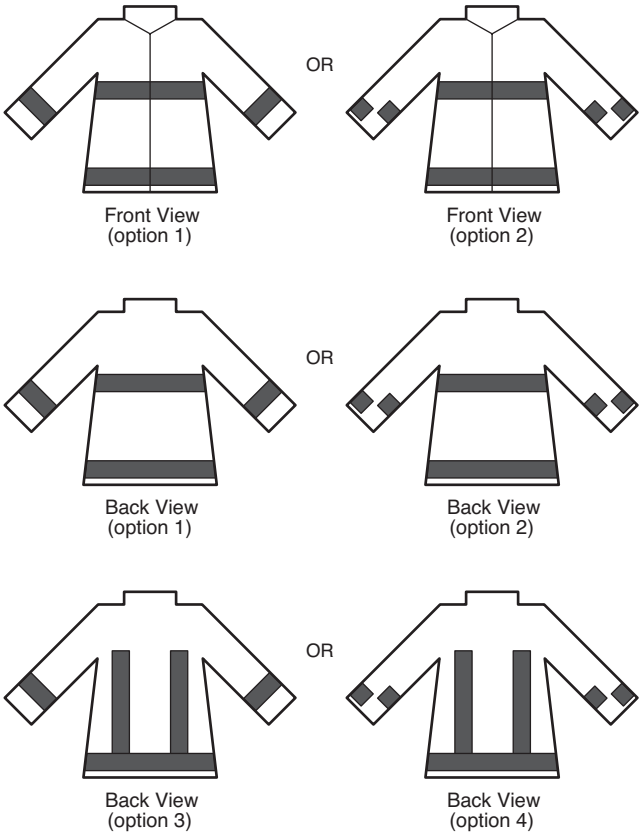

FIGURE 6.2.3 Minimum Required Structural Fire Fighting Coat Trim Patterns.

6.2.3.1 The coat minimum trim pattern shall have one circumferential band of trim or a staggered 360-degree visibility pattern meeting or exceeding the surface area of a continuous circumferential band around the bottom of the coat. The front of the coat shall also have at least one band of horizontal trim at the chest level located within 75 mm (3 in.) above or below the sleeve-to-body underarm garment seam.

6.2.3.2 The lower edge of the circumferential band on the lower part of the coat shall be within 25 mm (1 in.) of the coat hem's highest point.

6.2.3.3 Where a staggered pattern is used in the lower circumferential trim band, the lower edge of the upper trim piece shall not be higher than the upper edge of the lower trim piece.

6.2.3.4 The back of the coat shall also have a minimum of either two vertical stripes of trim, perpendicular to the bottom band and with one strip located on both the left and right sides of the back of the coat, or a minimum of one horizontal band of trim at the chest/shoulder blade level located within 75 mm (3 in.) above or below the sleeve-to-body underarm garment seam.

6.2.3.5 The minimum trim configuration for each sleeve shall be one circumferential band, or a staggered 360-degree visibility pattern meeting or exceeding the surface area of a continuous circumferential band, between the wrist and elbow level.

6.2.3.5.1 Where trim on the coat intersects a zipper or where the trim intersects the innermost seam of each sleeve, a maximum gap in the trim of 25 mm (1 in.) shall be permitted.

6.2.3.5.2 The lower edge of the circumferential band shall be within 50 mm (2 in.) of the end of the coat sleeve.

6.2.4* Trouser trim configuration shall be in accordance with Figure 6.2.4.

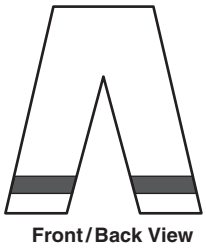

FIGURE 6.2.4 Minimum Required Structural Fire Fighting Trouser Trim Patterns.

6.2.4.1 The minimum trim pattern for the trousers shall consist of two circumferential bands of trim with one band around each leg between the bottom hem and knee areas.

6.2.4.2 Where trim on the trouser element intersects a zipper or where the trim intersects the innermost seam of each trouser leg, a maximum gap in the trim of 25 mm (1 in.) shall be permitted.

6.3 Additional Design Requirements for Proximity Fire Fighting Protective Garment Elements Only.

6.3.1 Proximity fire fighting protective garment elements shall also have at least the applicable design requirements specified in this section in addition to the design requirements specified in Section 6.1, Protective Garment Element Design Requirements for Both Ensembles, where inspected and evaluated by the certification organization as specified in Section 4.3, Inspection and Testing.

6.3.2 Garments shall not have materials that do not meet the radiant reflective requirements specified in 7.3.2 affixed to the outer shell radiant reflective surfaces of the garments unless such materials are covered in 6.3.3.

6.3.3 Reinforcing materials that do not meet the radiant reflective requirements specified in 7.3.2 shall be permitted to be affixed only to the garment outer shell radiant reflective surfaces as reinforcement of the sleeve cuffs and trouser leg cuffs where the following requirements are met:

(1) The reinforcing materials shall meet the flame resistant requirements specified in 7.1.3.

--`,,```,,,,````-`-`,,`,,`,`,,`---
Copyright National Fire Protection Association
Provided by IHS under license with NFPA
No reproduction or networking permitted without license from IHS
Not for Resale

(2) The reinforcing materials shall meet the heat resistance requirements specified in 7.1.5.
(3) Reinforcement areas shall not cover the radiant reflective surfaces of the garment by more than 25 mm (1 in.) when measured from the edge of the cuff back along the sleeve or leg.

6.3.4 The collar lining material shall not be reflective material.

6.4 Protective Helmet Element Design Requirements for Both Ensembles.

6.4.1 Protective helmet elements shall have at least the applicable design requirements specified in this section where inspected and evaluated by the certification organization as specified in Section 4.3, Inspection and Testing.

6.4.2 No openings shall penetrate the helmet shell other than those provided by the manufacturer for mounting energy absorbing systems, retention systems, and accessories.

6.4.3 The helmet retention system shall include a chin strap and a nape device. The chin strap shall have a minimum width of 19 mm (¾ in.).

6.4.4 All sewing thread used in the construction of helmets shall be made of inherently flame-resistant fiber.

6.4.5 The helmet faceshield or the faceshield/goggle component, when deployed, shall provide at least the following field of vision:

(1) Dihedral angle of at least 85 degrees
(2) Upper dihedral angle of at least 10 degrees
(3) Lower dihedral angle of at least 40 degrees

6.4.5.1 The field of vision shall be measured from the center of the eye.

6.4.5.2 The faceshield or the faceshield/goggle component shall be positioned in accordance with the helmet positioning index on an Alderson 50th percentile male headform specified in Figure 8.17.4.1.1.

6.4.5.3 The helmet positioning index shall be the vertical distance, as specified by the helmet manufacturer, from the lowest point of the brow at the lateral midpoint of the helmet to the basic plane of the Alderson 50th percentile male headform with the helmet firmly positioned on the headform.

6.4.6 The helmet faceshield or the faceshield/goggle component in the stowed position shall provide peripheral vision clearance of at least 94 degrees to each side.

6.4.6.1 The peripheral vision clearance shall be measured from the center of the eye with the helmet positioned according to the helmet positioning index on the Alderson 50th percentile male headform specified in Figure 8.17.4.1.1.

6.4.7 Where helmets are provided with an SCBA facepiece that is attached or integrated with the helmet, the helmet with the SCBA facepiece installed shall meet all applicable design and performance requirements of this standard.

6.5 Additional Design Requirements for Structural Fire Fighting Protective Helmet Elements Only.

6.5.1 Structural fire fighting protective helmet elements shall also have at least the applicable design requirements specified in this section in addition to the design requirements specified in Section 6.4, Protective Helmet Element Design Requirementsfor Both Ensembles, where inspected and evaluated by the certification organization as specified in Section 4.3, Inspection and Testing.

6.5.2* Helmets shall consist of at least all of the following assembled components:

(1) Shell
(2) Energy absorbing system
(3) Retention system
(4) Fluorescent and retroreflective trim
(5) Ear covers
(6) A faceshield or goggles, or both

6.5.2.1 Where a faceshield is selected in accordance with 6.5.2(6), the faceshield component shall be attached to the helmet.

6.5.2.2 Where the goggle component is selected in accordance with 6.5.2(6), the goggles shall be permitted to be unattached, not assembled, to the helmet.

6.5.3 Helmets shall have fluorescent and retroreflective trim on the shell exterior.

6.5.3.1 A minimum of 2580 mm^2 (4 $in.^2$) of the retroreflective and fluorescent trim shall be visible above the reference plane when the helmet, with the faceshield/goggle component in the stowed position, is viewed at the following positions:

(1) Left intersection of the coronal and reference planes at a distance of 2.4 m (8 ft)
(2) Right intersection of the coronal and reference planes at a distance of 2.4 m (8 ft)
(3) Rear intersection of the midsagittal and reference planes at a distance of 2.4 m (8 ft)

6.5.3.2 A minimum of 2580 mm^2 (4 $in.^2$) of the retroreflective and fluorescent trim shall be visible when the helmet, with the faceshield/goggle component in the stowed position, is viewed at the intersection of the midsagittal plane and the coronal plane at a distance of 2.4 m (8 ft).

6.5.3.3 The entire surface of the trim shall be permitted to be both fluorescent and retroreflective.

6.5.4 Helmet ear covers or the portion of the helmet providing the coverage of the ears, when deployed, shall provide at least the following coverage:

(1) 95 mm (3¾ in.) measured 50 mm (2 in.) forward of the coronal plane
(2) 120 mm (4¾ in.) measured 25 mm (1 in.) forward of the coronal plane
(3) 130 mm (5⅛ in.) measured at the coronal plane
(4) 130 mm (5⅛ in.) measured at the midsagittal plane at the rear of the headform

6.5.4.1 The helmet, with the ear covers or the portion of the helmet providing the ear coverage deployed, shall be donned in the proper wearing position as specified by the helmet manufacturer on an ISO J headform according to its helmet positioning index.

6.5.4.2 The helmet positioning index shall be the vertical distance, as specified by the helmet manufacturer, from the lowest point of the brow at the lateral midpoint of the helmet to the basic plane of the ISO J headform with the helmet firmly positioned on the headform.

6.5.4.3 In this position, the ear coverage shall be measured downward from the reference plane to the lower edge of the

Copyright National Fire Protection Association
Provided by IHS under license with NFPA
No reproduction or networking permitted without license from IHS
Not for Resale

ear coverage at the specified points to determine the coverage specified in 6.5.4.

6.5.4.4 Where the helmet incorporates a ratchet-style headband, an opening in the covering surrounding the ratchet knob shall be permitted. The opening shall not extend more than 13 mm (½ in.) in any direction around the perimeter of the adjustment device.

6.6 Additional Design Requirements for Proximity Fire Fighting Helmet Elements Only.

6.6.1 Proximity fire fighting protective helmet elements shall also have at least the applicable design requirements specified in this section in addition to the design requirements specified in Section 6.4, Protective Helmet Element Design Requirements for Both Ensembles, where inspected and evaluated by the certification organization as specified in Section 4.3, Inspection and Testing.

6.6.2 Helmet elements shall consist of at least the following assembled components:

(1) Shell
(2) Energy absorbing system
(3) Retention system
(4) Faceshield
(5) Shroud

6.6.3 Helmet faceshields shall be attached to the helmet.

6.6.4 Helmets shall be permitted to have an outer cover to provide the radiant reflective protection for the exterior of the helmet shell, including the upper surface of the brim, and the brim edge.

6.6.4.1 The helmet outer cover shall be permitted to be removable.

6.6.4.2 The helmet, and helmet outer cover where provided, shall be permitted to have fluorescent and retroreflective trim on the helmet exterior and on the helmet outer cover.

6.6.4.3 Identification markings or material including, but not limited to, trim, lettering, patches, name or number stencils, emblems, and paint shall be permitted *only* on the helmet outer cover, provided such materials are located above the corresponding helmet test line.

6.6.5 The helmet shroud component shall consist of an outer shell, moisture barrier, and thermal liner. This composite shall be permitted to be configured as a single layer or multiple layers, however, all of the layers shall be permanently attached together around the edges.

6.6.5.1 The shroud shall be attached to the helmet and shall be designed to cover and provide continuous radiant reflective protection for the head, face, and neck areas that do not receive primary protection from the helmet or faceshield.

6.6.5.2 Shrouds shall provide at least the following coverage:

(1) 230 mm (9⅛ in.) on each side measured downward from the reference plane at the coronal plane
(2) 330 mm (13 in.) in the back measured downward from the reference plane at the rear mid sagittal plane
(3) 295 mm (11⅝ in.) in the front measured downward from the reference plane at the front midsagittal plane, including the gap of material where the face opening is located

6.6.5.3 The shroud shall be permitted to be a part of a helmet outer cover, where provided.

6.6.5.4 The shroud shall be designed to interface with a specific helmet.

6.6.5.5 The helmet shroud, when deployed, shall provide at least the following field of vision:

(1) Dihederal angle of at least 85 degrees
(2) Upper dihedral angle of at least 7 degrees
(3) Lower dihederal angle of at least 40 degrees

6.6.5.5.1 The field of vision shall be measured from the center of the eye.

6.6.5.5.2 The helmet with the shroud attached shall be seated according to its helmet positioning index on the Alderson 50th percentile male headform illustrated in Figure 8.17.4.1.1.

6.6.5.5.3 The helmet positioning index shall be the vertical distance, as specified by the helmet manufacturer, from the lowest point of the brow at the lateral midpoint of the helmet to the basic plane of the Alderson 50th percentile male headform with the helmet firmly positioned on the headform.

6.6.6 No openings shall be permitted in the helmet shroud other than to meet the requirement of 6.6.5.5.

6.6.7 When the hood interface component is integrated with the protective garment, the shroud shall be permitted to consist of only the outer reflective layer and those other layers necessary to meet the requirements in 7.14.2 for thermal protective performance.

6.7 Protective Glove Elements Design Requirements for Both Ensembles.

6.7.1 Protective glove elements shall have at least the applicable design requirements specified in this section when inspected and evaluated by the certification organization as specified in Section 4.3, Inspection and Testing.

6.7.2 Gloves shall consist of a composite meeting the performance requirements of Section 7.7, Protective Glove Element Performance Requirements for Both Ensembles.

6.7.2.1 The composite shall be permitted to be configured as a continuous or joined single layer or as continuous or joined multiple layers.

6.7.2.2 Supplemental gloves that are provided to meet the performance requirements of this standard but are not intended to be worn continuously with the wearing of the gloves shall not be permitted.

6.7.2.3 Where a glove is made up of multiple layers, all layers of the glove shall be individually graded per size.

6.7.2.4 Where an interface component connects the glove to the coat sleeve in a manner providing continuous thermal protection, the interface shall meet the applicable performance requirements in Section 7.16, Protective Wristlet Interface Component Performance Requirements for Both Ensembles, and demonstrates liquid integrity, then gloves shall not be required to meet the requirements in 6.7.3 through 6.7.3.4.

6.7.3 Gloves shall be permitted to be provided with either a gauntlet or a glove wristlet.

6.7.3.1 Where gloves are provided with a gauntlet or a glove wristlet, the glove body including the gauntlet or including the glove wristlet shall extend circumferentially at least 50 mm (2 in.) beyond the wrist crease.

--`,,```,,,,````-`-`,,`,,`,`,,`---

Copyright National Fire Protection Association
Provided by IHS under license with NFPA
No reproduction or networking permitted without license from IHS
Not for Resale

6.7.3.2 Where gloves are not provided with a gauntlet or glove wristlet, the glove body shall extend circumferentially at least 50 mm (2 in.) beyond the wrist crease.

6.7.3.3 The location of the wrist crease shall be determined as shown in Figure 6.7.3.3.

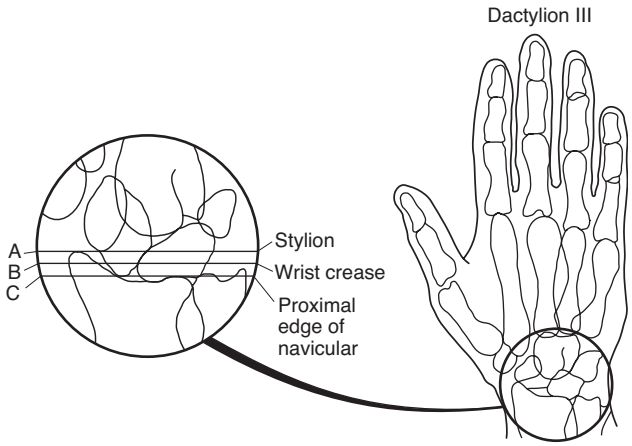

FIGURE 6.7.3.3 Anatomical Landmarks at Base of Hand.

6.7.3.4 In all cases, the required protection of the glove body shall extend 50 mm (2 in.) beyond the wrist crease.

6.7.4 All sewing thread utilized in the construction of gloves shall be made of an inherently flame-resistant fiber.

6.7.5 For selection of proper glove size, the dimensions for hand circumference and the hand length shall be measured as shown in Figure 6.7.5.

6.7.5.1 Hand circumference shall be measured by placing a measuring tape on a table or other flat surface with the numerals facing downward.

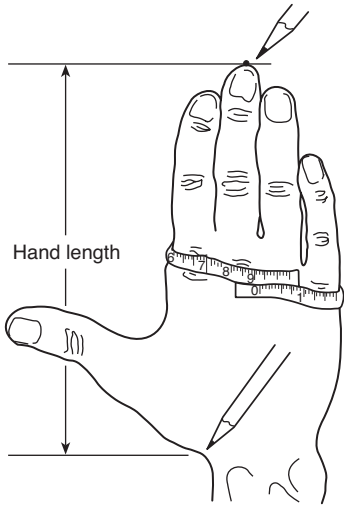

FIGURE 6.7.5 Method of Measuring Hand Dimensions for Selection of Proper Glove.

6.7.5.1.1 The subject shall place the right hand, palm down and fingers together, in the middle of the tape so that the tape can pass straight across the metacarpal knuckles.

6.7.5.1.2 The circumference shall be measured to the nearest 3 mm (⅛ in.) as shown in Figure 6.7.5.

6.7.5.2 Finger circumference shall be measured at the proximal interphalangeal joint (first knuckle).

6.7.5.3 Finger length shall be measured from the tip of the finger to the base of the finger crease on the palm side.

6.7.5.4 Hand length shall be measured by placing the subject's hand, palm down, on a piece of paper with the fingers together and the hand and arm in a straight line.

6.7.5.4.1 The thumb shall be fully abducted, extended away from the palm as far as possible.

6.7.5.4.2 The paper shall be marked at the tip of the third, or middle, finger. A pencil mark shall be placed in the notch at the base of the thumb where the thumb joins the wrist.

6.7.5.4.3 The straight line distance between the two points shall be measured to the nearest 3 mm (⅛ in.) as shown in Figure 6.7.5.

6.7.6 In order to label or otherwise represent a glove as compliant with the requirements of this standard, the manufacturer shall provide gloves in the following sizes:

(1) Extra, extra small (XXS)
(2) Extra small (XS)
(3) Small (S)
(4) Medium (M)
(5) Large (L)
(6) Extra large (XL)
(7) Extra, extra large (XXL)

6.7.6.1 The glove sizes from XS through XL indicated on the label shall be determined by the hand dimensions given in Table 6.7.6.1(a) through Table 6.7.6.1(e).

6.7.6.2 The sizes for XXS shall be smaller than the sizing indicated in Table 6.7.6.1(a) and Size XXL shall be larger than sizes indicated in Table 6.7.6.1(e).

6.7.7* The glove size indicated on the label shall be determined by the hand dimensions given in Table 6.7.6.1(a) through Table 6.7.6.1(e).

6.8 Additional Design Requirements for Structural Fire Fighting Protective Glove Elements Only. (Reserved)

6.9 Additional Design Requirements for Proximity Fire Fighting Protective Glove Elements Only.

6.9.1 Proximity fire fighting protective glove elements shall also have at least the applicable design requirements specified in this section in addition to the design requirements specified in Section 6.7, Protective Glove Element Design Requirements for Both Ensembles, where inspected and evaluated by the certification organization as specified in Section 4.3.

6.9.2 Gloves shall not be permitted to have any hardware.

6.9.3 The outer shell of the back and portions of the sides of the glove body including the back of the digits shall be a radiant reflective material.

Copyright National Fire Protection Association
Provided by IHS under license with NFPA
No reproduction or networking permitted without license from IHS
Not for Resale

Table 6.7.6.1(a) Sizing for Extra Small (XS) Glove

			mm	in.
Range for hand length:			**16.25–17.25**	**6.40–6.79**
Range for hand circumference:			**16.25–20.25**	**6.40–7.97**
	Mid-Size Value		**Range to Be Accommodated**	
	cm	**in.**	**cm**	**in.**
Digit 1 circumference	6.17	2.43	5.60–6.74	2.20–2.65
Digit 2 circumference	6.06	2.39	5.50–6.63	2.17–2.61
Digit 3 circumference	6.08	2.39	5.53–6.63	2.18–2.61
Digit 4 circumference	5.69	2.24	5.12–6.26	2.02–2.46
Digit 5 circumference	5.00	1.97	4.48–5.52	1.76–2.17
Digit 1 length	4.94	1.94	4.36–5.52	1.72–2.17
Digit 2 length	6.44	2.54	5.75–7.12	2.26–2.80
Digit 3 length	7.29	2.87	6.71–7.87	2.64–3.10
Digit 4 length	6.78	2.67	6.13–7.42	2.41–2.92
Digit 5 length	5.09	2.00	4.52–5.66	1.78–2.23
Hand circumference	18.25	7.19	16.34–20.16	6.43–7.94
Hand length	16.75	6.59	16.27–17.23	6.41–6.78

Table 6.7.6.1(b) Sizing for Small (S) Glove

			mm	in.
Range for hand length:			**17.25–18.25**	**6.79–7.19**
Range for hand circumference:			**17.25–21.25**	**6.79–8.37**
	Mid-Size Value		**Range to Be Accommodated**	
	cm	**in.**	**cm**	**in.**
Digit 1 circumference	6.40	2.52	5.82–6.97	2.29–2.74
Digit 2 circumference	6.29	2.48	5.73–6.85	2.26–2.70
Digit 3 circumference	6.31	2.48	5.76–6.87	2.27–2.70
Digit 4 circumference	5.92	2.33	5.35–6.49	2.11–2.56
Digit 5 circumference	5.22	2.06	4.70–5.74	1.85–2.26
Digit 1 length	5.31	2.09	4.74–5.89	1.87–2.32
Digit 2 length	6.89	2.71	6.21–7.57	2.44–2.98
Digit 3 length	7.71	3.04	7.13–8.30	2.81–3.27
Digit 4 length	7.19	2.83	6.55–7.03	2.58–3.08
Digit 5 length	5.44	2.14	4.87–6.01	1.92–2.37
Hand circumference	19.25	7.58	17.34–21.16	6.83–8.33
Hand length	17.75	6.99	17.27–18.23	6.80–7.18

Table 6.7.6.1(c) Sizing for Medium (M) Glove

			mm	in.
Range for hand length:			**18.25–19.25**	**7.19–7.58**
Range for hand circumference:			**18.25–22.25**	**7.19–8.76**
	Mid-Size Value		**Range to Be Accommodated**	
	cm	**in.**	**cm**	**in.**
Digit 1 circumference	7.01	2.76	6.36–7.65	2.50–3.01
Digit 2 circumference	6.82	2.69	6.31–7.32	2.48–2.88
Digit 3 circumference	6.83	2.69	6.26–7.40	2.46–2.91
Digit 4 circumference	6.34	2.50	5.78–6.90	2.28–2.72
Digit 5 circumference	5.63	2.22	5.09–6.17	2.00–2.43
Digit 1 length	5.63	2.22	5.00–6.26	1.97–2.46
Digit 2 length	7.11	2.80	6.50–7.72	2.56–3.04
Digit 3 length	8.07	3.18	7.55–8.58	2.97–3.38
Digit 4 length	7.61	3.00	7.14–8.08	2.81–3.18
Digit 5 length	5.78	2.28	5.16–6.41	2.03–2.52
Hand circumference	20.25	7.97	18.34–22.16	7.22–8.72
Hand length	18.75	7.38	18.27–19.23	7.19–7.57

Copyright National Fire Protection Association
Provided by IHS under license with NFPA
No reproduction or networking permitted without license from IHS
Not for Resale

Table 6.7.6.1(d) Sizing for Large (L) Glove

			mm	in.
Range for hand length:			**19.25–20.25**	**7.58–7.97**
Range for hand circumference:			**19.25–23.25**	**7.58–9.15**
	Mid-Size Value		**Range to Be Accommodated**	
	cm	**in.**	**cm**	**in.**
Digit 1 circumference	7.26	2.86	6.62–7.91	2.61–3.11
Digit 2 circumference	7.03	2.77	6.53–7.54	2.57–2.97
Digit 3 circumference	7.10	2.80	6.53–7.66	2.57–3.02
Digit 4 circumference	6.60	2.60	6.04–7.16	2.38–2.82
Digit 5 circumference	5.85	2.30	5.31–6.39	2.09–2.52
Digit 1 length	5.87	2.31	5.24–6.50	2.06–2.56
Digit 2 length	7.49	2.95	6.88–8.10	2.71–3.19
Digit 3 length	8.54	3.36	8.03–9.06	3.16–3.57
Digit 4 length	8.03	3.16	7.56–8.50	2.98–3.35
Digit 5 length	6.13	2.41	5.51–6.75	2.17–2.66
Hand circumference	21.25	8.37	19.34–23.16	7.61–9.12
Hand length	19.75	7.78	19.27–20.23	7.59–7.96

Table 6.7.6.1(e) Sizing for Extra-Large (XL) Glove

			mm	in.
Range for hand length:			**20.25–21.25**	**7.97–8.37**
Range for hand circumference:			**20.25–24.25**	**7.97–9.55**
	Mid-Size Value		**Range to Be Accommodated**	
	cm	**in.**	**cm**	**in.**
Digit 1 circumference	7.52	2.96	6.87–8.16	2.70–3.21
Digit 2 circumference	7.25	2.85	6.74–7.76	2.65–3.06
Digit 3 circumference	7.36	2.90	6.79–7.93	2.67–3.12
Digit 4 circumference	6.86	2.70	6.30–7.42	2.48–2.92
Digit 5 circumference	6.06	2.39	5.52–6.60	2.17–2.60
Digit 1 length	6.11	2.41	5.48–6.75	2.16–2.66
Digit 2 length	7.86	3.09	7.26–8.47	2.86–3.33
Digit 3 length	9.02	3.55	8.51–9.54	3.35–3.76
Digit 4 length	8.44	3.32	7.97–8.91	3.14–3.51
Digit 5 length	6.48	2.55	5.85–7.10	2.30–2.80
Hand circumference	22.25	8.76	20.34–24.16	8.01–9.51
Hand length	20.75	8.17	20.27–21.23	7.98–8.36

6.9.3.1 Glove fingers, thumb, and the back shall have radiant reflective protection of 210 degrees, +20°/–0°. The radiant reflective material shall provide coverage from 0 degrees to 105 degrees, +10°/–0°, and then from 255 degrees, +10°/–0°, to 360 degrees as specified in Figure 6.9.3.1.

6.9.3.2 The radiant reflective material shall provide coverage for the finger/thumb tip of at least 195 degrees, +10°/–0°, as specified in Figure 6.9.3.1.

6.9.3.3 The portion of the finger, thumb, and palm surfaces that are not covered by the radiant reflective protection shall be the gripping surface of the glove.

6.10 Protective Footwear Elements Design Requirements for Both Ensembles.

6.10.1 Protective footwear elements shall have at least the applicable design requirements specified in this section where inspected and evaluated by the certification organization as specified in Section 4.3.

6.10.2 Footwear shall consist of at least the following assembled components: a sole with a heel, an upper with lining, a puncture resistant device, an insole, a ladder shank or whole sole equivalent, and an impact- and compression-resistant toecap.

6.10.2.1 Where booties are incorporated as a component of the footwear, the booties component shall meet the performance requirements of 7.1.12, 7.1.13, 7.1.14, 7.1.15, 7.1.16, and 7.1.17.

6.10.2.2 Where booties are used, the outer footwear shall not be required to have a liner in the upper.

6.10.2.3 Supplemental footwear that are provided to meet the performance requirements of this standard but are not intended to be worn continuously with the wearing of the footwear element shall not be permitted.

6.10.3 Footwear height shall be a minimum of 250 mm (10 in.).

6.10.3.1 The footwear height shall be determined by measuring inside the footwear from the center of the insole at the

Copyright National Fire Protection Association
Provided by IHS under license with NFPA
No reproduction or networking permitted without license from IHS
Not for Resale

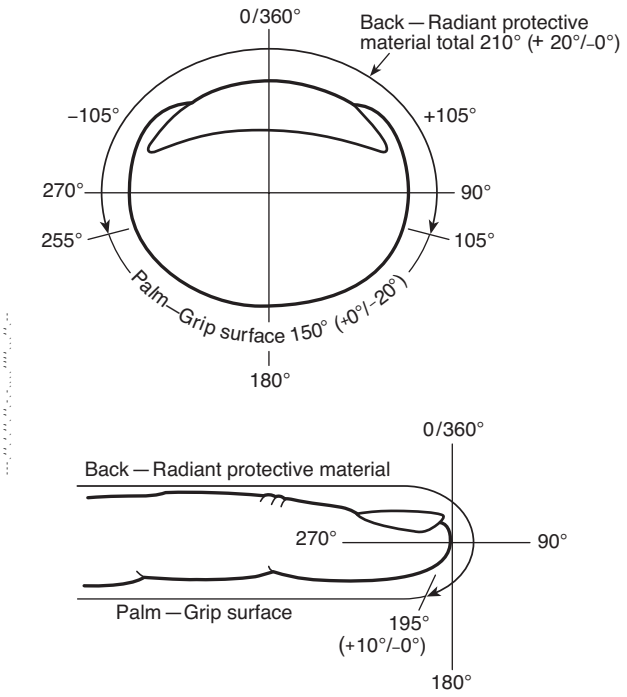

FIGURE 6.9.3.1 Glove Radiant Reflective Protection Areas.

heel up to a perpendicular reference line extending across the width of the footwear at the lowest point of the footwear excluding pull-on loops, pull-on loop attachments, pull-up holes, collars, or any other features that interrupt either the thermal or moisture protection.

6.10.3.2 Removable insoles shall not be removed prior to measurement.

6.10.3.3 Thermal, physical, and moisture protection shall be continuous for the entire footwear height as determined in 6.10.3.1.

6.10.4 The footwear heel breast shall not be less than 13 mm (½ in.) nor more than 25 mm (1 in.).

6.10.4.1 The heel breasting angle shall not be less than 90 degrees nor more than 135 degrees.

6.10.4.2 The heel edges shall not extend more than 13 mm (½ in.) laterally from the upper at any point.

6.10.4.3 The width of the footwear heel shall be equal to or greater than the width of the sole at the intersection of the heel breast and the sole bottom, excluding any calendar roll where present.

6.10.5 The puncture-resistant device shall cover the maximum area of the insole as specified in Section 3.3 of CSA Z195, *Protective Footwear*.

6.10.6 All hardware and external fittings shall be free of rough spots, burrs, or sharp edges that could tear primary materials.

6.10.6.1 Metal parts shall not penetrate from the outside into the lining or insole at any point.

6.10.6.2 No metal parts, including but not limited to nails or screws, shall be present or utilized in the construction or attachment of the sole with heel to the puncture-resistant device, insole, or upper.

6.10.7 All sewing thread utilized in the construction of footwear shall be made of an inherently flame-resistant fiber.

6.10.8 In order to label or otherwise represent footwear as compliant with the requirements of this standard, the manufacturer shall have footwear available in all of the following sizes:

(1) Men's 5–13, including half sizes and a minimum of three widths
(2) Women's 5–10, including half sizes and a minimum of three widths

6.10.8.1 Manufacturers shall be required to establish and provide upon request a size conversion chart for each model or style of protective footwear based on toe length, arch length, and foot width as measured on the Brannock Scientific Foot Measuring Device.

6.10.8.2 Full and half sizes in each of the three required widths shall be accomplished by individual and unique men's and women's lasts to provide proper fit. Dual sizing of the same pair of boots to cover men's and women's boot styles shall not be acceptable.

6.11 Additional Design Requirements for Structural Fire Fighting Protective Footwear Only. (Reserved)

6.12 Additional Design Requirements for Proximity Fire Fighting Protective Footwear Only. (Reserved)

6.13 Protective Hood Interface Component Design Requirements for Both Ensembles.

6.13.1 Hood interface components shall have at least the applicable design requirements specified in this section where inspected and evaluated by the certification organization as specified in Section 4.3, Inspection and Testing.

6.13.2 Hoods shall be permitted to be integrated with the protective coat.

6.14 Additional Design Requirements for Structural Fire Fighting Protective Hood Interface Components Only.

6.14.1 Hood interface components shall have at least the applicable design requirements specified in this section where inspected and evaluated by the certification organization as specified in Section 4.3, Inspection and Testing.

6.14.2 The hood shall be designed to cover and provide the limited protection, as specified within this section, to the head, face, and neck areas but not including the face opening specified in 6.14.5.

6.14.2.1 Where the hood is integrated with the protective coat, the hood shall not be required to meet the design requirement specified in 6.14.4.

6.14.3 All sewing thread utilized in the construction of hoods shall be made of an inherently flame-resistant fiber.

6.14.4 The hood shall be donned properly, in accordance with the manufacturer's instructions for wearing, on the ISO size J headform specified in Figure 8.16.4.1.

6.14.4.1 In this position, the hood shall provide a minimum coverage on each side measured downward from the reference plane at the coronal plane of 225 mm (9 in.), shall provide a minimum coverage in the back measured downward from the reference plane at the rear midsagittal plane of

Copyright National Fire Protection Association
Provided by IHS under license with NFPA
No reproduction or networking permitted without license from IHS
Not for Resale

330 mm (13 in.), and shall provide a minimum coverage in the front measured downward from the reference plane at the front midsagittal plane, including the face opening, of 305 mm (12 in.).

6.14.5 Hoods shall be designed with a face opening. Other than where the hood face opening is designed to interface with a specific SCBA facepiece or where the hood face opening is designed to be adjustable, the hood face opening shall measure 145 mm, +0/–25 mm (5⅝ in., +0/–1 in.), in any direction when the hood is laid out in a relaxed condition on a flat surface, smoothed out, and with the face opening up.

6.14.5.1 Where the hood face opening is designed to interface with a specific SCBA facepiece, the hood face opening shall overlap the outer edge of the specific SCBA facepiece-to-face seal perimeter by not less than 13 mm (½ in.).

6.14.5.2 Where the hood face opening is provided with manual adjustment, the hood face opening shall be adjustable to achieve a face opening of 145 mm (5⅝ in.).

6.15 Additional Design Requirements for Proximity Fire Fighting Protective Hood Interface Components Only. (Reserved)

6.16 Protective Wristlets Interface Component Design Requirements for Both Ensembles.

6.16.1 Wristlet interface components shall have at least the applicable design requirements specified in this section where inspected and evaluated by the certification organization as specified in Section 4.3, Inspection and Testing.

6.16.2* Wristlets shall be designed to cover and provide limited protection to the wrist areas.

6.16.3 Wristlets shall be permanently attached to the protective coat sleeve in a manner that will not permit a gap in the thermal protection.

6.16.4 All sewing thread utilized in the construction of wristlets shall be made of an inherently flame-resistant fiber.

6.17 Additional Design Requirements for Structural Fire Fighting Protective Wristlet Interface Components Only. (Reserved)

6.18 Additional Design Requirements for Proximity Fire Fighting Protective Wristlet Interface Components Only. (Reserved)

6.19 Reserved.

6.20 Optional Design Requirements for Protection from CBRN Terrorism Agents.

6.20.1 CBRN Protective Ensemble Design Requirements for Both Ensembles.

6.20.1.1 CBRN ensembles shall have at least the applicable design requirements specified in this section where inspected and evaluated by the certification organization as specified in Section 4.3, Inspection and Testing.

6.20.1.2 CBRN ensembles, including SCBA, shall be designed to protect the wearer's upper and lower torso, head, arms, legs, hands, and feet.

6.20.1.3 CBRN ensemble elements shall include garments, helmet, gloves, footwear, interface components, and hood when the hood is not already part of the protective garment.

6.20.1.4 The manufacturer shall specify each SCBA that is part of the CBRN protective ensemble. All SCBA specified by the ensemble manufacturer for inclusion in the ensemble shall be certified to NFPA 1981, *Standard on Open-Circuit Self-Contained Breathing Apparatus for Fire and Emergency Services*, and shall be certified by NIOSH as CBRN SCBA compliant with the *Statement of Standard for NIOSH CBRN SCBA Testing*.

6.20.1.5 CBRN ensembles shall be designed to accommodate the SCBA specified by the manufacturer for the specific ensemble.

6.20.2 Additional CBRN Design Requirements for Structural Fire Fighting Protective Ensembles Only. (Reserved)

6.20.3 Additional CBRN Design Requirements for Proximity Fire Fighting Protective Ensembles Only. (Reserved)

6.20.4 CBRN Protective Garment Element Design Requirements for Both Ensembles.

6.20.4.1 CBRN garments shall have at least the applicable design requirements specified in this subsection where inspected and evaluated by the certification organization as specified in Section 4.3, Inspection and Testing.

6.20.4.2 CBRN garments shall be designed and configured to protect at least the wearer's upper and lower torso, arms and legs, but excluding the hands, feet, and head.

6.20.4.2.1 CBRN garments shall be permitted to include integrated hoods to protect the wearer's head in conjunction with the SCBA specified by the ensemble manufacturer.

6.20.4.3 All hardware and external fittings shall be free of rough spots, burrs, or sharp edges that could tear primary materials.

6.20.5 Additional CBRN Design Requirements for Structural Fire Fighting Protective Garment Elements Only. (Reserved)

6.20.6 Additional CBRN Design Requirements for Proximity Fire Fighting Protective Garment Elements Only. (Reserved)

6.20.7 CBRN Protective Helmet Elements Design Requirements for Both Ensembles.

6.20.7.1 Helmets shall have at least the applicable design requirements specified in this subsection where inspected by the certification organization as specified in Section 4.3, Inspection and Testing.

6.20.7.2 Where the CBRN barrier layer is provided in the protective hood and provides an interface with the CBRN SCBA specified by the ensemble manufacturer, the helmet shall not be required to incorporate a CBRN barrier layer.

6.20.7.3 Where the helmet is not required to demonstrate compliance with the CBRN design and performance requirements, the manufacturer shall not specify a specific helmet as part of the CBRN protective ensemble.

6.20.8 Additional CBRN Design Requirements for Structural Fire Fighting Protective Helmet Elements Only. (Reserved)

6.20.9 Additional CBRN Design Requirements for Proximity Fire Fighting Protective Helmet Elements Only. (Reserved)

6.20.10 CBRN Protective Glove Elements Design Requirements for Both Ensembles.

6.20.11 Additional CBRN Design Requirements for Structural Fire Fighting Protective Glove Elements Only. (Reserved)

Copyright National Fire Protection Association
Provided by IHS under license with NFPA
No reproduction or networking permitted without license from IHS
Not for Resale

6.20.12 Additional CBRN Design Requirements for Proximity Fire Fighting Protective Glove Elements Only. (Reserved)

6.20.13 CBRN Protective Footwear Elements Design Requirements for Both Ensembles.

6.20.14 Additional CBRN Design Requirements for Structural Fire Fighting Protective Footwear Elements Only. (Reserved)

6.20.15 Additional CBRN Design Requirements for Proximity Fire Fighting Protective Footwear Elements Only. (Reserved)

6.20.16 CBRN Protective Hood Interface Component Design Requirements for Both Ensembles.

6.20.16.1 CBRN hood interface components shall have at least the applicable design requirements specified in this subsection where inspected by the certification organization as specified in Section 4.3, Inspection and Testing.

6.20.16.2 CBRN hood interface components shall be designed and configured to protect the wearer's head, neck, and face areas, excluding the portion of the face covered by the facepiece of the SCBA specified by the ensemble manufacturer.

6.20.16.3 CBRN hood interface components shall be permitted to be integrated with the protective garment.

6.20.17 CBRN Protective Hood Interface Component Design Requirements for Structural Fire Fighting Ensembles.

6.20.18 CBRN Protective Shroud Interface Component Design Requirements for Proximity Fire Fighting Ensembles. (Reserved)

Chapter 7 Performance Requirements

7.1 Protective Garment Elements Performance Requirements for Both Ensembles.

7.1.1 Protective garment elements composite consisting of outer shell, moisture barrier, and thermal barrier shall be tested for thermal insulation as specified in Section 8.10, Thermal Protective Performance (TPP) Test, and shall have an average TPP of not less than 35.0.

7.1.2 Garments shall be tested for overall liquid penetration resistance as specified in Section 8.48, Whole Garment Liquid Penetration Test, and shall allow no liquid penetration.

7.1.3 Garment outer shells, moisture barriers, thermal barriers, collar linings, winter liners where provided, drag rescue devices (DRDs), trim, lettering, and other materials used in garment construction including, but not limited to, padding, reinforcement, interfacing, binding, hanger loops, emblems, and patches shall be individually tested for resistance to flame as specified in Section 8.2, Flame Resistance Test 1, and shall not have a char length of more than 100 mm (4 in.) average, shall not have an afterflame of more than 2.0 seconds average, and shall not melt or drip.

7.1.3.1 Labels shall meet the performance requirements specified in 7.1.3 only where placed on the exterior of the garment.

7.1.3.2 Zippers and seam-sealing materials shall meet the performance requirements specified in 7.1.3 only where located on the exterior of the garment or located where they will directly contact the wearer's body.

7.1.3.3 Elastic and hook and pile fasteners shall meet the performance requirements specified in 7.1.3 only where located where they will directly contact the wearer's body.

7.1.3.4 Small specimens such as hanger loops and emblems or patches that are not large enough to meet the specimen size requirements in 8.2.2.1 shall be tested for resistance to flame as specified in Section 8.2, Flame Resistance Test 1, and shall not be totally consumed, shall not have an afterflame of more than 2.0 seconds average, and shall not melt or drip.

7.1.4 Garment outer shells, moisture barriers, thermal barriers, winter liners where provided, and collar linings shall be individually tested for resistance to heat as specified in Section 8.6, Heat and Thermal Shrinkage Resistance Test, and shall not shrink more than 10.0 percent in any direction.

7.1.5 Garment outer shells, moisture barriers, thermal barriers, collar linings, winter liners where provided, DRDs, trim, lettering, and other materials used in garment construction, including, but not limited to, padding, reinforcement, labels, interfacing, binding, hanger loops, emblems, or patches, but excluding elastic and hook and pile fasteners where these items are placed so that they will not directly contact the wearer's body, shall be individually tested for resistance to heat as specified in Section 8.6, Heat and Thermal Shrinkage Resistance Test, and shall not melt, separate, or ignite.

7.1.6 The garment composite from the shoulder areas and the knee areas shall be tested for resistance to heat transfer as specified in Section 8.51, Conductive and Compressive Heat Resistance (CCHR) Test, and shall have a minimum CCHR rating of 25 for the shoulder areas, and for the knee areas.

7.1.7 Garment moisture barrier seams shall be individually tested for resistance to heat as specified in Section 8.6, Heat and Thermal Shrinkage Resistance Test, and shall not drip or ignite.

7.1.8 Garment outer shells and collar linings shall be individually tested for resistance to heat as specified in Section 8.6, Heat and Thermal Shrinkage Resistance Test, and shall not char.

7.1.9 All garment hardware, excluding hook and pile fasteners, where placed so that they will not directly contact the wearer's body, shall be individually tested for resistance to heat as specified in Section 8.6, Heat and Thermal Shrinkage Resistance Test, and shall not ignite and shall remain functional.

7.1.10 All sewing thread utilized in the construction of garments and DRDs shall be tested for resistance to melting as specified in Section 8.11, Thread Melting Test, and shall not melt at or below 260°C (500°F).

7.1.11 Garment outer shells and collar linings shall be individually tested for resistance to tearing as specified in Section 8.12, Tear Resistance Test, and shall have a tear strength of not less than 100 N (22 lbf).

7.1.12 Garment moisture barriers, thermal barriers, and winter liners, where provided, shall be tested for resistance to tearing as specified in Section 8.12, Tear Resistance Test, and shall have a tear strength of not less than 22 N (5 lbf).

7.1.13 All garment seam assemblies shall be tested for strength as specified in Section 8.14, Seam-Breaking Strength Test.

7.1.13.1 Woven garment seam assemblies and specimens of seam assemblies that contain at least one woven material shall demonstrate a sewn seam strength equal to or greater than 667 N (150 lbf) force for Major A seams, 334 N (75 lbf) force for Major B seams, and 180 N (40 lbf) force for Minor seams when tested using the method specified in 8.14.3.2.1.

7.1.13.2 Seam breaking strength shall be considered acceptable where the fabric strength is less than the required seam

Copyright National Fire Protection Association
Provided by IHS under license with NFPA
No reproduction or networking permitted without license from IHS
Not for Resale

strength specified in 7.1.13.1, providing the fabric fails without failure of the seam below the applicable forces specified in 7.1.13.1.

7.1.13.3 All knit or stretch woven garment seam assemblies shall demonstrate a sewn seam strength equal to or greater than 180 N (40 lbf) when tested using the method specified in 8.14.3.2.2.

7.1.13.4 All combination woven and knit or stretch knit seam specimens shall meet the requirements specified in 7.1.13.1.

7.1.14 Garment moisture barriers shall be tested for resistance to water penetration as specified in Section 8.27, Water Penetration Resistance Test, and shall have a minimum water penetration resistance of 172 kPa (25 psi).

7.1.15* Garment moisture barrier materials and seams shall be tested for resistance to liquid penetration as specified in Section 8.28, Liquid Penetration Resistance Test, and shall show no penetration of the test liquids for at least 1 hour.

7.1.16 Garment moisture barriers and moisture barrier seams shall be tested for resistance to liquid or bloodborne pathogens as specified in Section 8.29, Viral Penetration Resistance Test, and shall allow no penetration of the Phi-X-174 bacteriophage for at least 1 hour.

7.1.17 Garment outer shells, moisture barriers, thermal barriers, winter liners where provided, and collar linings shall be individually tested for resistance to shrinkage as specified in Section 8.25, Cleaning Shrinkage Resistance Test, and shall not shrink more than 5 percent in any direction.

7.1.18 Garment outer shells and collar linings shall be individually tested for resistance to water absorption as specified in Section 8.26, Water Absorption Resistance Test, and shall not have more than 30 percent water absorption.

7.1.19 Garment outer shells and collar linings shall be individually tested for strength after washing as specified in Section 8.50, Breaking Strength Test, and shall have a breaking strength of not less than 623 N (140 lbf).

7.1.20 All garment metal hardware and specimens of all garment hardware that include metal parts shall be individually tested for resistance to corrosion as specified in Section 8.30, Corrosion Resistance Test and shall have metals that are inherently resistant to corrosion including but not limited to stainless steel, brass, copper, aluminum, and zinc show no more than light surface-type corrosion or oxidation, shall have ferrous metals show no corrosion of the base metal, and shall have all hardware remain functional.

7.1.21 Labels shall be tested for durability and legibility as specified in Section 8.42, Label Durability and Legibility Test 1, and shall remain in place, and shall be legible.

7.1.22 DRD materials, seams, splices, and joints shall be tested for material strength as specified in Section 8.58, DRD Materials Strength Test, and shall have a minimum tensile strength of 7 kN (1573 lbf).

7.1.23 Garments with the DRD installed shall be tested for functionality as specified in Section 8.59, DRD Function Test, and shall allow for the mannequin to be dragged for a minimum of 2.5 m (98 in.) and the DRD shall be deployed within 10 seconds.

7.1.24 Garment moisture barrier materials shall be tested for resistance to light degradation as specified in Section 8.62, Light Degradation Resistance Test, and water shall not appear on the surface of the specimen.

7.2 Additional Performance Requirements for Structural Fire Fighting Protective Garment Elements Only.

7.2.1 Structural fire fighting protective garment elements shall also meet the performance requirements specified in this section in addition to the performance requirements specified in Section 7.1, Protective Garment Elements Performance Requirements for Both Ensembles.

7.2.2 Garment composite consisting of the outer shell, moisture barrier, and thermal barrier shall be tested for evaporative heat transfer as specified in Section 8.34, Total Heat Loss Test, and shall have a total heat loss of not less than 205 W/m^2.

7.2.3 Garment trim shall be tested for retroreflectivity and fluorescence as specified in Section 8.46, Retroreflectivity and Fluorescence Test, and shall have a Coefficient of Retroreflection (R_a) of not less than 100 $cd/lux/m^2$ (100 $cd/fc/ft^2$), and shall have the color be fluorescent yellow-green, fluorescent orange-red, or fluorescent red.

7.3 Additional Performance Requirements for Proximity Fire Fighting Protective Garment Elements Only.

7.3.1 Proximity fire fighting protective garment elements shall also meet the performance requirements specified in this section in addition to the performance requirements specified in Section 7.1, Protective Garment Elements Design Requirements for Both Ensembles.

7.3.2 Garment outer shells shall be tested for radiant reflective capability as specified in Section 8.52, Radiant Protective Performance Test, and shall have a radiant reflective value of not less than 20 seconds.

7.3.3 Garment outer shells shall be tested for resistance to delamination as specified in Section 8.54, Wet Flex Test, and shall show no signs of cracking on the face or delamination.

7.3.4 Garment outer shells shall be tested for adhesion durability as specified in Section 8.55, Adhesion After Wet Flex-Tape Method, and shall show no evidence of separation of the coating or laminate from the base material.

7.3.5 Garment outer shells shall be tested for flex durability as specified in Section 8.56, Flex at Low Temperature, and shall show no evidence of breaking, shattering, or cracking of the coating, laminate, or fabric.

7.3.6 Garment outer shells shall be tested for blocking durability as specified in Section 8.57, Resistance to High-Temperature Blocking, and shall show no blocking.

7.4 Protective Helmet Elements Performance Requirements for Both Ensembles.

7.4.1 Protective helmet elements shall be tested for resistance to impact as specified in Section 8.15, Top Impact Resistance Test (Force), and shall have no sample transmit a force of more than 3780 N (850 lbf).

7.4.2 Helmets shall be tested for resistance to impact as specified in Section 8.16, Impact Resistance Test (Acceleration), and shall have no specimen exceed the maximum acceleration specified in Table 7.4.2. Any acceleration above 200 Gn shall not exceed a duration of 3 milliseconds, and an acceleration above 150 Gn shall not exceed a duration of 6 milliseconds.

Copyright National Fire Protection Association
Provided by IHS under license with NFPA
No reproduction or networking permitted without license from IHS
Not for Resale

Table 7.4.2 Impact Acceleration

Impact Location	Maximum Acceleration	m · sec/sec	ft · sec/sec
Top	150 × Gn*	1471.5	4830
Front	300 × Gn	2943.0	9660
Sides	300 × Gn	2943.0	9660
Back	300 × Gn	2943.0	9660

*Gn denotes gravitational acceleration, which is defined as 9.81 m · sec/sec (32.2 ft · sec/sec).

7.4.3 Helmets shall be tested for resistance to penetration as specified in Section 8.19, Physical Penetration Resistance Test, and shall exhibit no electrical or physical contact between the penetration test striker and the headform.

7.4.4 Helmets shall be tested for resistance to heat as specified in Section 8.6, Heat and Thermal Shrinkage Resistance Test. The following results shall be considered unacceptable:

(1) Parts of the complete helmet assembly that do not contact the headform before this test come in contact with the headform as a result of this test
(2) Shell distortion in the back extending more than 40 mm (1⅝ in.) below the original position of the helmet
(3) Distortion of the front and sides of the shell extending more than 30 mm (1³⁄₁₆ in.) below the original position of the helmet
(4) Separation, melting, or dripping of the retention system, energy absorption system, or ear covers
(5) Dysfunctional chin strap closure device
(6) Ignition of any part of the helmet assembly
(7) Ignition or melting of the product labels
(8) Part of the faceshield/goggle component that was not below the brim line prior to the test be below the brim line after the test
(9) Dripping of the faceshield/goggle component

7.4.5 Helmets shall be tested for resistance to flame as specified in Section 8.3, Flame Resistance Test 2, Procedures A and C, and shall not show any visible afterflame or glow 5.0 seconds after removal from the test flame in each test.

7.4.6 Helmets shall be tested for resistance to electricity as specified in both Procedure A and Procedure B of Section 8.31, Electrical Insulation Test 1, and shall not have leakage current exceeding 3.0 mA in each test.

7.4.7 Helmets shall be tested for retention ability as specified in Section 8.35, Retention System Test, without any break occurring and without any resulting slip or stretch of more than 20 mm (¹³⁄₁₆ in.).

7.4.8 Helmet suspension systems shall be tested for retention ability as specified in Section 8.36, Suspension System Retention Test, and shall not separate from the helmet.

7.4.9 Helmets shall be tested for shell retention ability as specified in Section 8.44, Shell Retention Test, and shall not have the helmet shell separate from the helmet suspension and retention systems.

7.4.10 All materials utilized in the construction of helmet ear covers and chin straps shall be individually tested for resistance to flame as specified in Section 8.2, Flame Resistance Test 1, and shall not have a char length greater than 100 mm (4 in.), shall not show any visible afterflame 2.0 seconds after removal from the test flame, and shall not melt or drip.

7.4.11 All materials utilized in the construction of helmet ear covers and chin straps shall be individually tested for resistance to heat as specified in Section 8.6, Heat and Thermal Shrinkage Resistance Test, and shall not shrink more than 10 percent in any direction, and shall not melt, separate, or ignite. Helmet chin strap material shall meet the thermal shrinkage requirement for the length dimension only.

7.4.12 All sewing thread used in the construction of helmets shall be tested for melting resistance as specified in Section 8.11, Thread Melting Test, and shall not melt below 260°C (500°F).

7.4.13 All helmet metal hardware and specimens of all helmet hardware that include metal parts shall be individually tested for resistance to corrosion as specified in Section 8.30, Corrosion Resistance Test, and shall have metals that are inherently resistant to corrosion including but not limited to stainless steel, brass, copper, aluminum, and zinc show no more than light surface-type corrosion or oxidation, shall have ferrous metals show no corrosion of the base metal, and shall have all hardware remain functional.

7.4.14 Labels shall be tested for durability and legibility as specified in Section 8.43, Label Durability and Legibility Test 2 and shall remain in place, and shall be legible.

7.4.15 Helmet trim shall be tested for retroreflectivity and fluorescence as specified in Section 8.46, Retroreflectivity and Fluorescence Test, and shall have a Coefficient of Retroreflection (R_a) of not less than 100 cd/lux/m^2 (100 cd/fc/ft^2), and shall have the color be fluorescent yellow-green, fluorescent orange-red, or fluorescent red.

7.4.16 Faceshield/goggle components shall be tested for resistance to impact as specified in Section 8.17, Faceshield/Goggle Component Lens Impact Resistance Test, Tests One and Two, and shall not have any faceshield/goggle component contact an "eye" of the headform, and shall not have any parts or fragments be ejected from the component that could contact the eye of the headform.

7.4.17 Faceshield/goggle components shall be tested for flame resistance as specified in Section 8.3, Flame Resistance Test 2, Procedure B, and shall not show any visible afterflame 5.0 seconds after removal of the test flame.

7.5 Additional Performance Requirements for Structural Fire Fighting Protective Helmet Elements Only.

7.5.1 Structural fire fighting protective helmet elements shall also meet the performance requirements specified in this section in addition to the performance requirements specified in Section 7.4, Protective Helmet Elements Performance Requirements for Both Ensembles.

7.5.2 All fabrics utilized in construction of faceshield/goggle components shall be tested for flame resistance as specified in Section 8.2, Flame Resistance Test 1, and all fabrics shall not have a char length of more than 100 mm (4 in.) average, and shall not have an afterflame of more than 5.0 seconds average after removal of the test flame.

7.5.3 Faceshield/goggle component lenses shall be tested for resistance to scratching as specified in Section 8.23, Faceshield/Goggle Component Lens Scratch Resistance Test, and shall not exhibit a delta haze of greater than 25 percent.

Copyright National Fire Protection Association
Provided by IHS under license with NFPA
No reproduction or networking permitted without license from IHS
Not for Resale

7.5.4 Faceshield/goggle component lenses shall be tested for transmittance of light as specified in Section 8.45, Luminous (Visible) Transmittance Test, and shall have clear lenses transmit a minimum of 85 percent of the incident visible radiation, and shall have colored lenses transmit a minimum of 43 percent of the incident visible radiation.

7.5.5 Where provided, the faceshield/goggle component attachment hardware shall be tested for flame resistance as specified in Section 8.3, Flame Resistance Test 2, Procedure D, and shall not show any visible afterflame 5.0 seconds after removal of the test flame.

7.5.6 Helmet ear covers shall be tested for thermal insulation as specified in Section 8.10, Thermal Protective Performance (TPP) Test, and shall have an average TPP rating of at least 20.0.

7.6 Additional Performance Requirements for Proximity Fire Fighting Helmet Elements Only.

7.6.1 Proximity fire fighting protective helmet elements shall also meet the performance requirements specified in this section in addition to the performance requirements specified in Section 7.4, Protective Helmet Elements Performance Requirements for Both Ensembles.

7.6.2 Helmets shall be tested for radiant reflective value as specified in Section 8.53, Radiant Heat Resistance Test 3, and shall not have a temperature rise of more than 25°C (45°F).

7.6.3 Helmet shrouds shall be tested for radiant reflective capability as specified in Section 8.52, Radiant Protective Performance Test, and shall have a radiant reflective value of not less than 20 seconds.

7.6.4 Helmet shrouds with a laminate base fabric shall be tested for resistance to delamination as specified in Section 8.54, Wet Flex Test, and shall show no signs of cracking on the face or delamination.

7.6.5 Helmet shrouds shall be tested for adhesion durability as specified in Section 8.55, Adhesion After Wet Flex-Tape Test, and shall show no evidence of separation of the coating or laminate from the base material.

7.6.6 Helmet shrouds shall be tested for flex durability as specified in Section 8.56, Flex at Low Temperature Test, and shall show no evidence of breaking, shattering, or cracking of the coating, laminate, or fabric.

7.6.7 Helmet shrouds shall be tested for blocking durability as specified in Section 8.57, Resistance to High-Temperature Blocking Test, and shall show no blocking.

7.6.8 Helmet shroud composites consisting of outer shell, moisture barrier, and thermal barrier shall be tested for thermal insulation as specified in Section 8.10, Thermal Protective Performance (TPP) Test, and shall have an average TPP rating of not less than 35.0.

7.6.9 Helmet shroud moisture barrier materials and seams shall be tested for resistance to water penetration as specified in Section 8.27, Water Penetration Test, and shall have a minimum water penetration resistance of 172 kPa (25 psi).

7.6.10 Helmet shroud moisture barrier materials and seams shall be tested for resistance to liquid penetration as specified in Section 8.28, Liquid Penetration Resistance Test, and shall show no penetration of the test liquids for at least 1 hour.

7.6.11 Helmet shroud moisture barrier materials and seams shall be tested for resistance to liquidborne or bloodborne pathogens as specified in Section 8.29, Viral Penetration Resistance Test, and shall allow no penetration of the Phi-X-174 bacteriophage for at least 1 hour.

7.6.12 Helmet shroud outer shell material shall be individually tested for resistance to tearing as specified in Section 8.12, Tear Resistance Test, and shall have a tear strength of not less than 100 N (22 lbf).

7.6.13 Helmet faceshield component lenses shall be tested for transmittance of light as specified in Section 8.45, Luminous (Visible) Transmittance Test, and shall transmit not less than 30 percent of the incident visible radiation.

7.6.14 Helmet faceshields shall be tested for radiant reflective capability as specified in Section 8.52, Radiant Protective Performance Test, and shall have a radiant reflective value of not less than 30 seconds.

7.6.15 Helmet outer covers, where provided, shall be tested for radiant reflective capability as specified in Section 8.52, Radiant Protective Performance Test, and shall have a radiant reflective value of not less than 20 seconds.

7.6.16 Helmet outer covers, where provided, shall be tested for resistance to delamination as specified in Section 8.54, Wet Flex Test, and shall show no signs of cracking on the face or delamination.

7.6.17 Helmet outer covers, where provided, shall be tested for adhesion durability as specified in Section 8.55, Adhesion After Wet Flex-Tape Method Test, and shall show no evidence of separation of the coating or laminate from the base material.

7.6.18 Helmet outer covers, where provided, shall be tested for flex durability as specified in Section 8.56, Flex at Low Temperature Test, and shall show no evidence of breaking, shattering, or cracking of the coating, laminate, or fabric.

7.6.19 Helmet outer covers, where provided, shall be tested for blocking durability as specified in Section 8.57, Resistance to High-Temperature Blocking Test, and shall show no blocking.

7.6.20 Helmet outer covers, where provided, shall be tested for resistance to tearing as specified in Section 8.12, Tear Resistance Test, and shall have a tear strength of not less than 22 N (5 lbf).

7.7 Protective Glove Elements Performance Requirements for Both Ensembles.

7.7.1 The protective glove element body composite shall be tested for thermal insulation as specified in Section 8.10, Thermal Protective Performance (TPP) Test, and shall have an average TPP rating of at least 35.0.

7.7.2 Where gauntlets or glove wristlets are provided, the glove gauntlet or glove wristlet composite shall be tested for thermal insulation as specified in Section 8.10, Thermal Protective Performance (TPP) Test, and shall have an average TPP rating of at least 20.0.

7.7.3 Gloves shall be tested for resistance to heat as specified in Section 8.6, Heat and Thermal Shrinkage Resistance Test, and shall not melt, separate, or ignite, shall not shrink more than 8 percent in length or width, shall be donnable, and shall be flexible.

7.7.4 The innermost separable layer of the glove body composite that is designed to come into contact with the wearer's skin shall be individually tested for resistance to heat as specified in Section 8.6, Heat and Thermal Shrinkage Resistance Test, and shall not melt, separate, or ignite.

--`,,```,,,,````-`-`,,`,,`,`,,`---

Copyright National Fire Protection Association
Provided by IHS under license with NFPA
No reproduction or networking permitted without license from IHS
Not for Resale

7.7.5 The glove body composite shall be tested for thermal insulation as specified in Section 8.7, Conductive Heat Resistance Test 1, and shall have a second-degree burn time of not less than 10.0 seconds, and shall have a pain time of not less than 6.0 seconds.

7.7.6 The glove body composite shall be tested for resistance to flame as specified in Section 8.4, Flame Resistance Test 3, and shall not have an average char length of more than 100 mm (4 in.), shall not have an average afterflame of more than 2.0 seconds, shall not melt or drip, and shall not have the amount of consumed materials exceed 5 percent.

7.7.6.1 Where glove gauntlets are provided and the gauntlet composite is different than the glove body composite, the glove gauntlet composite shall meet the requirements specified in 7.7.6.

7.7.6.2 Where glove wristlets are provided, the wristlet composite shall meet the requirements specified in 7.7.6.

7.7.7 All sewing thread utilized in the construction of gloves shall be tested for melting resistance as specified in Section 8.11, Thread Melting Test, and shall not melt at or below 260°C (500°F).

7.7.8* The glove body composite and seams shall be tested for resistance to liquid-borne or blood-borne pathogens as specified in Section 8.29, Viral Penetration Resistance Test, and shall allow no penetration of the Phi-X-174 bacteriophage for at least 1 hour.

7.7.9* Glove body composite and seams shall be tested for resistance to liquid penetration as specified in Section 8.28, Liquid Penetration Resistance Test, and shall allow no penetration of test liquids for at least 1 hour.

7.7.10 The glove body composite shall be tested for resistance to cut as specified in Section 8.22, Cut Resistance Test, and shall have a distance of blade travel of more than 25 mm (1 in.).

7.7.11 The glove gauntlet or glove wristlet composite, if different from the glove body composite, shall be tested for resistance to cut as specified in Section 8.22, Cut Resistance Test, and shall have a distance of blade travel of more than 25 mm (1 in.).

7.7.12 The glove body composite shall be tested for resistance to puncture as specified in Section 8.20, Puncture Resistance Test 1, and shall not be punctured under an average applied force of 40 N (8.8 lbf).

7.7.13* Gloves shall be tested for hand function as specified in Section 8.38, Glove Hand Function Test, and shall have an average percent of barehand control not exceeding 250 percent.

7.7.14 Knit glove wristlet material(s) shall be tested for material strength as specified in Section 8.13, Burst Strength Test, and shall have a burst strength of not less than 225 N (50 lbf).

7.7.15 Knit glove wristlets and glove gauntlet seams shall be tested for seam strength as specified in Section 8.14, Seam-Breaking Strength Test, and shall have a burst strength of not less than 182 N (41 lbf).

7.7.16* Gloves shall be tested for resistance to leakage as specified in Section 8.33, Overall Liquid Integrity Test 1, and shall show no leakage.

7.7.17* Gloves shall be tested for ease of donning as specified in Section 8.37, Glove Donning Test, and shall have the dry hand donning time not exceed 10 seconds, shall have the wet hand donning time not exceed 15 seconds, shall have no detachment of the inner liner, shall have no detachment of the moisture barrier, and shall allow full insertion of all digits.

7.7.18 Gloves shall be tested for retention of the glove liner as specified in Section 8.63, Liner Retention Test, and shall have no detachment of the inner liner or moisture barrier.

7.7.19 Labels shall be tested for durability and legibility as specified in Section 8.42, Label Durability and Legibility Test 1, shall remain in place, and shall be legible.

7.8 Additional Performance Requirements for Structural Fire Fighting Protective Glove Elements Only.

7.8.1 Structural fire fighting protective glove elements shall also meet the performance requirements specified in this section in addition to the performance requirements specified in Section 7.7, Protective Glove Performance Requirements for Both Ensembles.

7.8.2 Gloves shall be tested for grip as specified in Section 8.9, Grip Test, and shall have a percentage of barehanded control value of not less than 90.

7.8.3 All glove metal hardware and all glove hardware that include metal parts shall be individually tested for resistance to corrosion as specified in Section 8.30, Corrosion Resistance Test, and shall have metals that are inherently resistant to corrosion including but not limited to stainless steel, brass, copper, aluminum, and zinc show no more than light surface-type corrosion or oxidation, shall have ferrous metals show no corrosion of the base metal, and shall have all hardware remain functional.

7.9 Additional Performance Requirements for Proximity Fire Fighting Protective Glove Elements Only.

7.9.1 Proximity fire fighting protective glove elements shall also meet the performance requirements specified in this section in addition to the performance requirements specified in Section 7.7, Protective Glove Performance Requirements for Both Ensembles.

7.9.2 The back of the hand of the glove, including the gauntlet where provided, shall be tested for radiant reflective capability as specified in Section 8.52, Radiant Protective Performance Test, and shall have a radiant reflective value of not less than 20 seconds.

7.9.3 The back of the hand of the glove, including the gauntlet where provided, shall be tested for resistance to delamination as specified in Section 8.54, Wet Flex Test, and shall show no signs of cracking on the face or delamination.

7.9.4 The back of the hand of the glove, including the gauntlet where provided, shall be tested for adhesion durability as specified in Section 8.55, Adhesion After Wet Flex-Tape Method Test, and shall show no evidence of separation of the coating or laminate from the base material.

7.9.5 The back of the hand of the glove, including the gauntlet where provided, shall be tested for flex durability as specified in Section 8.56, Flex at Low Temperature, and shall show no evidence of breaking, shattering, or cracking of the coating, laminate, or fabric.

7.9.6 The back of the hand of the glove, including the gauntlet where provided, shall be tested for blocking durability as specified in Section 8.57, Resistance to High-Temperature Blocking Test, and shall show no blocking.

--`,,```,,,,````-`-`,,`,,`,`,,`---

Copyright National Fire Protection Association
Provided by IHS under license with NFPA
No reproduction or networking permitted without license from IHS
Not for Resale

7.9.7 Gloves shall be tested for grip as specified in Section 8.39, Grip Test, and shall have a percentage of barehanded control value of not less than 80.

7.10 Protective Footwear Elements Performance Requirements for Both Ensembles.

7.10.1 Protective footwear elements shall be tested for thermal insulation as specified in Section 8.8, Conductive Heat Resistance Test 2, and the temperature of the insole surface in contact with the foot shall not exceed 44°C (111°F).

7.10.2 Footwear, with components in place, shall be tested for resistance to flame as specified in Section 8.5, Flame Resistance Test Four, shall not have an afterflame of more than 2.0 seconds, shall not melt or drip, and shall not exhibit any burn-through.

7.10.3 All sewing thread utilized in the construction of footwear shall be tested for melt resistance as specified in Section 8.11, Thread Melting Test, and shall not melt below 260°C (500°F).

7.10.4 The footwear upper material composite and footwear seams shall be tested for resistance to liquid penetration as specified in Section 8.28, Liquid Penetration Resistance Test, and shall allow no penetration of the test liquids for at least 1 hour.

7.10.5 The footwear upper material composite and footwear seams shall be tested for resistance to liquid- or blood-borne pathogens as specified in Section 8.29, Viral Penetration Resistance Test, and shall allow no penetration of the Phi-X-174 bacteriophage for at least 1 hour.

7.10.6 Footwear shall be tested for resistance to puncture as specified in Section 8.20, Puncture Resistance Test 1, and shall not puncture the footwear upper under an average applied force of 60 N (13 lbf).

7.10.7 Footwear shall be tested for resistance to puncture as specified in Section 8.21, Puncture Resistance Test 2, and shall not allow puncture through the sole area and the heel area at a force load of less than 1212 N (272 lbf).

7.10.8 Footwear uppers shall be tested for resistance to cut as specified in Section 8.22, Cut Resistance Test, and shall have a cut distance resistance of more than 25 mm (1 in.).

7.10.9* Footwear shall be tested for resistance to slipping as specified in Section 8.41, Slip Resistance Test, and the soles shall have a static coefficient of 0.75 or greater in a dry condition.

7.10.10 Footwear shall be tested for resistance to abrasion as specified in Section 8.24, Abrasion Resistance Test, and the sole with heel shall have an abrasion index of not less than 100.

7.10.11* Footwear shall be tested for resistance to electricity as specified in Section 8.32, Electrical Insulation Test 2, and shall have no current leakage in excess of 3.0 mA.

7.10.12 Footwear toes shall be tested for resistance to impact and compression as specified in Section 8.18, Impact and Compression Tests, and shall have an impact requirement of 102 J (75 ft-lb), and shall have a compression requirement of 11,121 N (2500 lbf) with a minimum clearance of at least 13 mm (½ in.).

7.10.13 Footwear ladder shanks or whole sole equivalents shall be tested for resistance to bending as specified in Section 8.40, Ladder Shank Bend Resistance Test, and shall not deflect more than 6 mm (¼ in.).

7.10.14 Footwear stud posts and eyelets shall be tested for attachment strength as specified in Section 8.49, Eyelet and Stud Post Attachment Test, and shall have a minimum detachment strength of 294 N (66 lbf).

7.10.15 All footwear metal hardware and specimens of all footwear hardware that include metal parts including but not limited to toecap, ladder shank, puncture-resistant device, and components shall be individually tested for resistance to corrosion as specified in Section 8.30, Corrosion Resistance Test, and shall have metals that are inherently resistant to corrosion including but not limited to stainless steel, brass, copper, aluminum, and zinc show no more than light surface-type corrosion or oxidation, shall have ferrous metals show no corrosion of the base metal, and shall have all hardware remain functional.

7.10.16 Labels shall be tested for durability and legibility as specified in Section 8.42, Label Durability and Legibility Test 1, and shall remain in place, and shall be legible to the unaided eye.

7.10.17 Footwear shall be tested for resistance to water as specified in Section 8.71, Overall Liquid Integrity Test 2, and shall show no liquid penetration.

7.10.18 The footwear puncture-resistant device shall be tested for resistance to flex cracking as specified in Section 8.72, Flex Cracking Resistance Test, and shall show no signs of cracking.

7.10.19 Footwear shall be tested for resistance to heat as specified in Section 8.6, Heat and Thermal Shrinkage Resistance Test, and shall not have any part of the footwear melt, separate, or ignite; shall show no water penetration, and shall have all components remain functional.

7.11 Additional Performance Requirements for Structural Fire Fighting Protective Footwear Elements Only.

7.11.1 Structural fire fighting protective footwear elements shall also meet the performance requirements specified in this section in addition to the performance requirements specified in Section 7.10, Protective Footwear Elements Performance Requirements for Both Ensembles.

7.11.2 Footwear shall be tested for thermal insulation as specified in Section 8.9, Radiant Heat Resistance Test 1, and the temperature of the upper surface in contact with the skin shall not exceed 44°C (111°F).

7.11.3 Footwear shall be tested for thermal insulation as specified in Section 8.7, Conductive Heat Resistance Test 1, and the temperature of the upper lining surface in contact with skin shall have a second-degree burn time of not less than 10.0 seconds, and shall have a pain time of not less than 6.0 seconds.

7.12 Additional Performance Requirements for Proximity Fire Fighting Protective Footwear Elements Only.

7.12.1 Proximity fire fighting protective footwear elements shall also meet the performance requirements specified in this section in addition to the performance requirements specified in Section 7.10, Protective Footwear Elements Performance Requirements for Both Ensembles.

7.12.2 Footwear shall be tested for radiant reflective capability as specified in Section 8.52, Radiant Protective Performance Test, and shall have a radiant reflective value of not less than 20 seconds.

7.12.3 Footwear shall be tested for thermal insulation as specified in Section 8.60, Conductive Heat Resistance Test 3, and the temperature of the upper lining surface in contact with skin shall not reach 44°C (111°F) in 10 minutes or less.

Copyright National Fire Protection Association
Provided by IHS under license with NFPA
No reproduction or networking permitted without license from IHS
Not for Resale

7.12.4 Footwear shall be tested for thermal insulation as specified in Section 8.61, Radiant Heat Resistance Test 2, and the temperature of the upper lining surface in contact with the skin shall not exceed 44°C (111°F).

7.13 Protective Hood Interface Component Performance Requirements for Both Ensembles. (Reserved)

7.14 Additional Performance Requirements for Structural Fire Fighting Protective Hood Interface Components Only.

7.14.1 Structural fire fighting protective hood face openings that are not manually adjustable or that are not designed for interface with a specific SCBA facepiece shall be tested for shape retention as specified in Section 8.47, Hood Opening Size Retention Test, and shall retain at least 80 percent of the original face opening size but shall not exceed 145 mm (5⅝ in.).

7.14.1.1 Where hood face openings are designed to interface with a specific SCBA facepiece, specimens of such hood face openings shall be tested for shape retention as specified in Section 8.47, Hood Opening Size Retention Test, and shall overlap the outer edge of the specific SCBA facepiece-to-face seal perimeter by not less than 13 mm (½ in.).

7.14.1.2 Where hood face openings are designed to be manually adjustable, such hood face openings shall meet the design requirement specified in 6.14.5.2.

7.14.2 Hoods shall be tested for thermal insulation as specified in Section 8.10, Thermal Protective Performance (TPP) Test, and shall have an average TPP rating of not less than 20.0.

7.14.3 Hood material(s), including labels but excluding hook and pile fasteners and elastic when not placed in direct contact with the body, shall be individually tested for resistance to flame as specified in Section 8.2, Flame Resistance Test 1, and shall not have a char length of more than 100 mm (4 in.) average, shall not have an afterflame of more than 2.0 seconds average, and shall not melt or drip.

7.14.4 Hood material(s), excluding labels, hook and pile fasteners, and elastic, shall be individually tested for resistance to heat as specified in Section 8.6, Heat and Thermal Shrinkage Resistance Test, and shall not shrink more than 10 percent in any direction.

7.14.5 Hood material(s), including labels but excluding hook and pile fasteners and elastic when these items are placed where they will not directly contact the wearer's body, shall be individually tested for resistance to heat as specified in Section 8.6, Heat and Thermal Shrinkage Resistance Test, and shall not melt, separate, or ignite.

7.14.6 Hoods shall be individually tested for resistance to shrinkage as specified in Section 8.25, Cleaning Shrinkage Resistance Test, and shall not shrink more than 5 percent in any dimension.

7.14.7 All sewing thread utilized in the construction of hoods shall be tested for melting resistance as specified in Section 8.11, Thread Melting Test, and shall not melt below 260°C (500°F).

7.14.8 Knit hood material(s) shall be tested for material strength as specified in Section 8.13, Burst Strength Test, and shall have a burst strength of not less than 225 N (51 lbf).

7.14.9 Knit hood seams shall be tested for seam strength as specified in Section 8.14, Seam-Breaking Strength Test, and shall have a burst strength of not less than 181 N (41 lbf).

7.14.10 Labels shall be tested for durability and legibility as specified in Section 8.42, Label Durability and Legibility Test 1, and shall remain attached to the hood, and shall be legible to the unaided eye.

7.15 Additional Performance Requirements for Proximity Fire Fighting Protective Hood Interface Components Only. (Reserved)

7.16 Protective Wristlet Interface Component Performance Requirements for Both Ensembles.

7.16.1 Protective wristlet interface components shall be tested for thermal insulation as specified in Section 8.10, Thermal Protective Performance (TPP) Test, and shall have an average TPP rating of not less than 20.0.

7.16.2 Wristlet material(s) shall be individually tested for resistance to flame as specified in Section 8.2, Flame Resistance Test 1, and shall not have a char length of more than 100 mm (4 in.) average, shall not have an afterflame of more than 2.0 seconds average, and shall not melt or drip.

7.16.3 Wristlet material(s) shall be individually tested for resistance to heat as specified in Section 8.6, Heat and Thermal Shrinkage Resistance Test, and shall not shrink more than 10 percent in any direction.

7.16.4 Wristlet material(s) shall be individually tested for resistance to heat as specified in Section 8.6, Heat and Thermal Shrinkage Resistance Test, and shall not melt, separate, or ignite.

7.16.5 Wristlet material(s) shall be individually tested for resistance to shrinkage as specified in Section 8.25, Cleaning Shrinkage Resistance Test, and shall not shrink more than 5 percent in any direction.

7.16.6 All sewing thread utilized in the construction of wristlets shall be tested for melting resistance as specified in Section 8.11, Thread Melting Test, and shall not melt at or below 260°C (500°F).

7.16.7 Knit wristlet material(s) shall be tested for material strength as specified in Section 8.13, Burst Strength Test, and shall have a burst strength of not less than 225 N (51 lbf).

7.16.8 Knit wristlet seams shall be tested for seam strength as specified in Section 8.14, Seam-Breaking Strength Test, and shall have a breaking strength of not less than 181 N (41 lbf).

7.17 Additional Performance Requirements for Structural Fire Fighting Protective Wristlet Interface Components Only. (Reserved)

7.18 Additional Performance Requirements for Proximity Fire Fighting Protective Wristlet Interface Components Only. (Reserved)

7.19 Reserved.

7.20 Optional Performance Requirements for Protection from CBRN Terrorism Agents.

7.20.1 CBRN Protective Ensemble Performance Requirements for Both Ensembles.

7.20.1.1* The entire CBRN protective ensemble shall be tested for overall inward leakage as specified in Section 8.66, Man-In-Simulant Test (MIST), and shall have an average local physiological protective dosage factor ($PPDF_i$) value at each PAD location for the four ensembles tested of no less than 360.0 and a systemic physiological protective dosage factor ($PPDF_{sys}$) value for each tested ensemble no less than 361.0.

Copyright National Fire Protection Association
Provided by IHS under license with NFPA
No reproduction or networking permitted without license from IHS
Not for Resale

7.20.1.2 The entire CBRN ensemble shall be tested as specified in Section 8.48, Whole Garment and Ensemble Liquid Penetration Test, and shall show no liquid penetration.

7.20.1.3 Each ensemble element's CBRN barrier layer and the CBRN barrier layer seams shall be tested for permeation resistance as specified in Section 8.67, Chemical Permeation Resistance Test, and shall meet the following performance criteria:

(1) For permeation testing of the chemical warfare agent distilled mustard (HD), the average cumulative permeation in 1 hour shall not exceed 4.0 $\mu g/cm^2$.
(2) For permeation testing of the chemical warfare agent Soman (GD), the average cumulative permeation in 1 hour shall not exceed 1.25 $\mu g/cm^2$.
(3) For permeation testing of liquid and gaseous toxic industrial chemicals, the average breakthrough time shall not be less than 60 minutes.

7.20.2 Additional CBRN Performance Requirements for Structural Fire Fighting Protective Ensembles Only. (Reserved)

7.20.3 Additional CBRN Performance Requirements for Proximity Fire Fighting Protective Ensembles Only. (Reserved)

7.20.4 CBRN Protective Garment Element Performance Requirements for Both Ensembles.

7.20.4.1 Where the garment element CBRN barrier material and the CBRN barrier material seams are also the moisture barrier and moisture barrier seams for the garment, the garment's CBRN barrier material and the CBRN barrier material seams shall meet all the performance requirements for the moisture barrier and the moisture barrier seams specified in 7.1.3, 7.1.4, 7.1.5, 7.1.7, 7.1.12, 7.1.13, 7.1.14, 7.1.15, 7.1.16, 7.1.17, and 7.1.24.

7.20.4.2 Where the garment CBRN barrier material and CBRN barrier material seams are the external layer of the garment, the garment CBRN barrier material and CBRN barrier material seams shall also meet all the performance requirements for the outer shell and the outer shell seams specified in 7.1.3, 7.1.4, 7.1.5, 7.1.8, 7.1.11, 7.1.13, 7.1.18, and 7.1.19.

7.20.4.3 Where the CBRN barrier material is configured as an external layer of the garment, the CBRN barrier material shall be tested for bursting strength as specified in Section 8.13, Burst Strength Test, and shall have a bursting strength of not less than 156 N (35 lbf).

7.20.4.4 Where the CBRN barrier material is configured as an external layer of the garment, the CBRN barrier material shall be tested for puncture propagation tear resistance as specified in Section 8.68, Puncture Propagation Tear Resistance Test, and shall have a puncture propagation tear resistance of not less than 31 N (7 lbf).

7.20.4.5 Where the CBRN barrier material is configured as an external layer of the garment, the CBRN barrier material shall be tested for cold weather performance as specified in Section 8.69, Cold Temperature Performance Test 1, and shall have a bending moment of not greater than 0.057 N-m (½ in.-lbf) at an angular deflection of 60 degrees at –25°C (–13°F).

7.20.5 Additional CBRN Performance Requirements for Structural Fire Fighting Protective Garment Elements Only. (Reserved)

7.20.6 Additional CBRN Performance Requirements for Proximity Fire Fighting Protective Garment Elements Only. (Reserved)

7.20.7 Protective Helmet Element CBRN Performance Requirements for Both Ensembles. (Reserved)

7.20.8 Additional CBRN Performance Requirements for Structural Fire Fighting Protective Helmet Elements Only. (Reserved)

7.20.9 Additional CBRN Performance Requirements for Proximity Fire Fighting Protective Helmet Elements Only. (Reserved)

7.20.10 Protective Glove Elements CBRN Performance Requirements for Both Ensembles.

7.20.10.1 Where the CBRN barrier layer is the most external layer of the glove element, the CBRN barrier layer shall be tested for cut resistance as specified in Section 8.22, Cut Resistance Test, and shall have a blade travel distance of not less than 25 mm (1 in.).

7.20.10.2 Where the CBRN barrier layer is the most external layer of the glove, the CBRN barrier layer shall be tested for puncture resistance as specified in Section 8.20, Puncture Resistance Test 1, and shall not be punctured under an average applied force of 22 N (5 lbf).

7.20.11 Additional CBRN Performance Requirements for Structural Fire Fighting Protective Glove Elements Only. (Reserved)

7.20.12 Additional CBRN Performance Requirements for Proximity Fire Fighting Protective Glove Elements Only. (Reserved)

7.20.13 Protective Footwear Elements CBRN Performance Requirements for Both Ensembles.

7.20.13.1 Where the CBRN barrier layer is the most external layer of the footwear, the CBRN barrier layer from the upper portion of the footwear shall be tested for cut resistance as specified in Section 8.22, Cut Resistance Test, and shall have a blade travel distance of not less than 25 mm (1 in.).

7.20.13.2 Where the CBRN barrier layer is the most external layer of the footwear, the CBRN barrier layer from the upper portion of the footwear shall be tested for puncture resistance as specified in Section 8.20, Puncture Resistance Test 1, and shall not be punctured under an average applied force of 36 N (8 lbf).

7.20.13.3 Where the CBRN barrier layer is the most external layer of the footwear, the CBRN barrier layer from the wear surface of the footwear element shall be tested for puncture resistance as specified in Section 8.20, Puncture Resistance Test 1, and shall not be punctured under an average applied force of 200 N (45 lbf).

7.20.13.4 Where the CBRN barrier layer is the most external layer of the footwear, the CBRN barrier layer from the wear surface of the footwear element shall be tested for abrasion resistance as specified in Section 8.70, Abrasion Resistance Test 2, and shall not show wearthrough of the film portion of the barrier layer for at least 3000 cycles.

7.20.14 Additional CBRN Performance Requirements for Structural Fire Fighting Protective Footwear Elements Only. (Reserved)

Copyright National Fire Protection Association
Provided by IHS under license with NFPA
No reproduction or networking permitted without license from IHS
Not for Resale

7.20.15 Additional CBRN Performance Requirements for Proximity Fire Fighting Protective Footwear Elements Only. (Reserved)

7.20.16 Protective Hood Interface Component CBRN Performance Requirements for Both Ensembles. (Reserved)

7.20.17 Additional CBRN Performance Requirements for Structural Fire Fighting Protective Hood Interface Components Only. (Reserved)

7.20.18 Additional CBRN Performance Requirements for Proximity Fire Fighting Protective Hood Interface Components Only. (Reserved)

Chapter 8 Test Methods

8.1 Sample Preparation Procedures.

8.1.1 Application.

8.1.1.1 The sample preparation procedures contained in this section shall apply to each test method in this chapter, as specifically referenced in the sample preparation section of each test method.

8.1.1.2 Only the specific sample preparation procedure or procedures referenced in the sample preparation section of each test method shall be applied to that test method.

8.1.2 Washing and Drying Procedure for Garments, Gloves, Hoods, and Wristlets. Specimens shall be subjected to five cycles of washing and drying in accordance with the procedure specified in Machine Cycle 1, Wash Temperature V, and Drying Procedure Ai of AATCC 135, *Dimensional Changes in Automatic Home Laundering of Woven and Knit Fabrics*. A 1.82 kg, ±0.1 kg (4.0 lb, ±0.2 lb), load shall be used. A laundry bag shall not be used.

8.1.3 Room Temperature Conditioning Procedure for Garments, Trim, Helmets, Gloves, Footwear, and Faceshield/Goggle Components.

8.1.3.1 Garment, glove, trim, and footwear samples shall be conditioned at a temperature of 21°C, ±3°C (70°F, ±5°F), and a relative humidity of 65 percent, ±5 percent, until equilibrium is reached, as determined in accordance with ASTM D 1776, *Standard Practice for Conditioning Textiles for Testing*, or for at least 24 hours. Specimens shall be tested within 5 minutes after removal from conditioning.

8.1.3.2 Helmet and faceshield/goggle component samples shall be conditioned at a temperature of 21°C, ±3°C (70°F, ±5°F), and a relative humidity of 25 percent to 50 percent. Specimens shall be tested within 5 minutes after removal from conditioning.

8.1.4 Low Temperature Environmental Conditioning Procedure for Helmets and Faceshield/Goggle Components. Samples shall be conditioned by exposing them to a temperature of –32°C, ±1°C (–25°F, ±2°F), for at least 4 hours. The impact/penetration test shall be completed within 15 seconds, ±5 seconds, after removal from the cold temperature environment, or the specimens shall be reconditioned before testing.

8.1.5 Convective Heat Conditioning Procedure for Helmets, Faceshield/Goggle Components, Gloves, Footwear, Moisture Barriers, Moisture Barrier Seams, Labels, and Trim. Samples shall be conditioned by exposing them to the procedures specified in 8.6.4 and in 8.6.5.2 through 8.6.5.4, with the following modifications:

(1) The oven temperature shall be stabilized at 140°C, +6°/–0°C (285°F, +10°/–0°F), for helmets, footwear, moisture barriers, moisture barrier seams, labels, and trim, and the test exposure time shall be 10 minutes, +15/–0 seconds.
(2) The oven temperature shall be stabilized at 177°C, +6°/–0°C (350°F, +10°/–0°F), for gloves only, the exposure time shall be 10 minutes, +15/–0 seconds, and the procedures specified in 8.6.13.5 shall be followed.
(3) The exposure time shall begin when the test thermocouple reading has stabilized at the required exposure temperature.
(4) The requirements of 8.6.5.5 and 8.6.5.6 shall be disregarded.
(5) For helmet specimens, the required testing shall be performed within 15 seconds, ±5 seconds, or the specimen shall be discarded and a new specimen shall be conditioned and tested as specified in this subsection. Only one helmet shall be conditioned at a time.
(6) For gloves, footwear, trim, labels, moisture barriers, and moisture barrier seam specimens, the required conditioning shall be performed no sooner than 24 hours after removal from conditioning. Samples shall be suspended in the oven such that there is a distance of at least 150 mm (6 in.) between items.
(7) For faceshield/goggle components, these components, attached to the helmet, shall be conditioned by placing them on a room temperature, solid, nonmetallic headform conforming to the dimensions in Figure 8.6.12.3 and by exposing them to a temperature of 108°C, +2°/–0°C (225°F, +3°/–0°F), for 20 minutes, +15/–0 seconds. The impact test shall be completed within 15 seconds, ±5 seconds, after removal from the environmental chamber, or the faceshield/goggle components shall be reconditioned and retested.
(8) The oven temperature shall be stabilized at 177°C, +6°/–0°C (350°F, +10°/–0°F), for glove moisture barriers, and the exposure time shall be 10 minutes, +15/–0 seconds. The glove moisture barrier sample pouch shall be filled to capacity with nominal 4 mm (3⁄32 in.) sized perforated soda-lime or borosilicate glass beads. The beads shall be room temperature. The opening of the pouch shall be folded over and clamped together, the specimen shall be suspended by the clamp in the oven so that the entire specimen is not less than 50 mm (2 in.) from any oven surface and not less than 150 mm (6 in.) from any other specimen, and airflow is parallel to the plane of the material. Not more than three samples shall be placed in the test oven at one time. The samples shall be suspended such that each sample is the same distance from the airflow source, so that no sample is blocking the airflow to other samples.

8.1.6 Radiant and Convective Heat Environmental Conditioning Procedure for Helmets.

8.1.6.1 Sample helmets shall be conditioned by exposing the area to be impacted/penetrated to a radiant heat source. The top, sides, front, and back test areas to be impacted/penetrated shall be as specified in Figure 8.1.6.1.

8.1.6.2 The area to be impacted/penetrated shall be exposed to an irradiance of 1.0 W/cm^2, ±0.1 W/cm^2, for a length of time determined by exposure of a radiant heat transducer. The heat source shall be removed and the helmet shall be tested. The helmet shall be impacted/penetrated in 15 seconds, ±5 seconds, after removal from the conditioning environment or the helmet shall be cooled to room temperature and reconditioned before testing.

--`,,```,,,,````-`-`,,`,,`,`,,`---
Copyright National Fire Protection Association
Provided by IHS under license with NFPA
No reproduction or networking permitted without license from IHS
Not for Resale

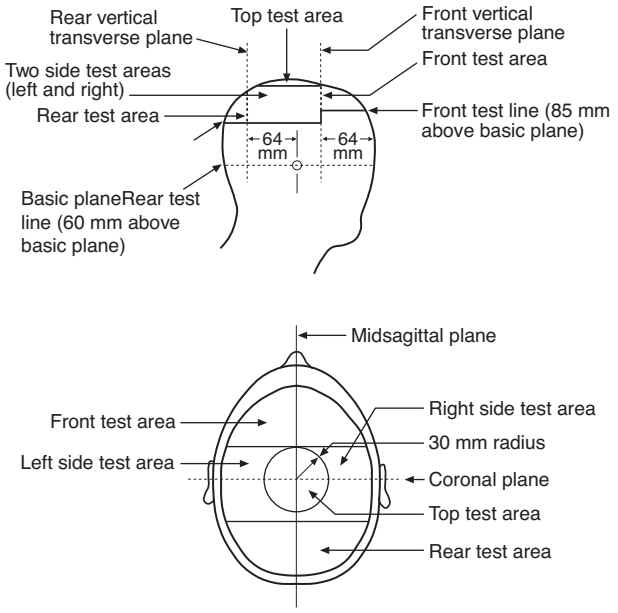

FIGURE 8.1.6.1 Helmet Test Areas and Landmarks.

8.1.6.3 The radiometer shall have a spectral response flat within ±3 percent over a range of at least 1.0 mm to 10.1 mm (0.04 in. to 0.4 in.) and an overall accuracy of at least ±5 percent of the reading.

8.1.6.4 The radiant panel shall have an effective radiating surface of 150 mm, ±6 mm (6 in., ±0.25 in.), square. The spectral radiant emittance curve of the radiant panel shall be that of a black body at a temperature of 1000°K, ±200°K (1340°F, ±360°F).

8.1.6.5 The radiant heat transducer shown in Figure 8.1.6.5 shall be constructed from sheet copper, ASTM B 152, *Specification for Copper Sheet, Strip Plate, and Rolled Bar*, Type 110 ETP, half hard, 0.64 mm, ±0.05 mm (0.025 in., ±0.002 in.), thick and 50 mm, ±0.5 mm (2 in., ±1⁄64 in.), square. A constantan wire 0.81 mm, ±0.05 mm (0.032 in., ±0.002 in.), in diameter and an iron wire of the same diameter shall be silver soldered 15 mm, ±1 mm, from the edges of the copper sheet on the same side, as shown in Figure 8.1.6.5. The side of the copper sheet opposite that with the wires attached shall be painted flat black. The resulting transducer is a Type J thermocouple that shall be used in conjunction with appropriate instrumentation to monitor the heat exposure to which the helmet is to be subjected.

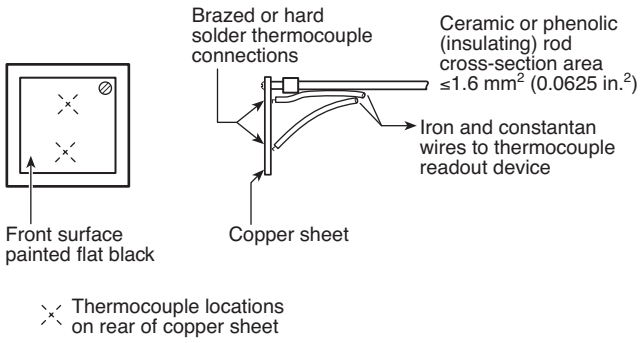

FIGURE 8.1.6.5 Radiant Heat Transducer.

8.1.6.6 Sample helmets shall be mounted in the position to be conditioned. The point of impact or penetration on the helmet shell shall be determined in accordance with the specific test to be performed. The helmet shall be removed temporarily, and a radiometer shall be located at that point perpendicular to and facing away from the helmet surface.

8.1.6.7 The radiant panel shall be introduced in front of the radiometer with its effective radiating surface parallel to the plane tangent to the helmet surface at the center of the impact/penetration site on the helmet. The radiant panel shall be adjusted to obtain a stable uniform irradiance of 1.0 W/cm^2, ±0.1 W/cm^2, over a minimum 75 mm (3 in.) diameter circle located on the above plane and centered at the center of impact or penetration. Stability shall be achieved when the irradiance changes by less than 10 percent during a 3-minute period.

8.1.6.8* The radiometer shall be replaced with the radiant heat transducer. The center of the transducer shall be positioned with its center coincident with the center of the impact/penetration site on the helmet and parallel to the plane tangent to the helmet surface at that point. The flat black surface of the transducer shall face the radiant panel. The time required for the transducer to reach a temperature of 260°C (500°F) shall be recorded. That time shall be 2.5 minutes, ±15.0 seconds. A closed, insulated chamber shall be required to achieve this exposure time.

8.1.6.9 The chamber and helmet shall be stabilized at 25°C, ±5°C (77°F, ±9°F). The helmet shall be positioned in the chamber in the same position specified in 8.1.6.6. The helmet shall be subjected to the exposure conditions specified in 8.1.6.2 for the time recorded in 8.1.6.8. The exposure time shall be not less than the time recorded in 8.1.6.8, nor more than 5 seconds longer than that time.

8.1.7 Wet Conditioning Procedure for Helmets and Faceshield/Goggle Components. Samples shall be conditioned by immersing them in water at a temperature of 20°C to 28°C (68°F to 82°F) for at least 4 hours but not more than 24 hours. The specimen shall be allowed to drain and be tested within 10 minutes after removal from water.

8.1.8 Wet Conditioning Procedure for Gloves.

8.1.8.1 Samples shall be conditioned by complete immersion in water at a temperature of 21°C, ±3°C (70°F, ±5°F), for 2 minutes.

8.1.8.2 Samples shall be removed from water, hung in a vertical position with glove or glove pouch opening facing down for 5 minutes, and laid horizontal with AATCC textile blotting paper both under and over the specimen under a pressure of 0.035 kg/cm^2, ±0.003 kg/cm^2 (0.50 psi, ±0.05 psi), for a period of 20 minutes in accordance with paragraph 7.2 of AATCC 70, *Test Method for Water Repellency: Tumble Jar Dynamic Absorption Test.*

8.1.9 Wet Conditioning Procedure for Footwear. Samples shall be preconditioned by immersion in tap water of 21°C (70.0°F) for 1 hour, ±5 minutes. Samples shall be drained upside down for 5 minutes. Testing shall be done 5 minutes, ±3 seconds, after draining.

8.1.10 Flexing Procedure for Gloves.

8.1.10.1 Glove samples shall be selected to fit the individual test subject.

8.1.10.2 The test subject shall don the glove sample.

8.1.10.3 Glove specimens shall be flexed by making a tight fist ten times during a 30-second period.

Copyright National Fire Protection Association
Provided by IHS under license with NFPA
No reproduction or networking permitted without license from IHS
Not for Resale

8.1.11 Washing and Drying Procedure for Non-CBRN Garments and for CBRN Garments, Gloves, Hoods, and Materials.

8.1.11.1 The complete garment shall be washed with all closures fastened and the garment in it's "as worn" orientation. Garments with separable liners shall not have the liners separated.

8.1.11.2 A front-loading washer/extractor shall be used.

8.1.11.3 The wash load shall not exceed two-thirds of the rated capacity of the washer.

8.1.11.4 The following wash cycle procedure in Table 8.1.11.4 shall be followed.

Table 8.1.11.4 Wash Cycle Procedure for Whole Garments and CBRN Materials

Operation	Time (min)	Temperature ±3°C	Temperature ±5°F	Water Level
Suds using AATCC detergent #1993, 1.0 g/gal water	10	49	120	Low
Drain	1			
Carry-over	5	49	120	Low
Drain	1			
Rinse	2	38	100	High
Drain	1			
Rinse	2	38	100	High
Drain	1			
Rinse	2	38	100	High
Drain	1			
Extract	5			

8.1.11.5 Garments shall be dried using a tumble dryer with a stack temperature of 38°C to 49°C (100°F to 120°F) when measured on an empty load 20 minutes into the drying cycle.

8.1.11.6 Garments shall be tumbled for 60 minutes and shall be removed immediately at the end of the drying cycle. At the conclusion of the final drying cycle, the garment shall be allowed to air dry for at least 48 hours prior to conducting the test.

8.1.11.7 Garments and materials that are not part of CBRN ensembles shall be washed and dried for a total of five cycles.

8.1.11.8 Garments, gloves, and hoods that are part of CBRN protective ensembles shall be washed and dried for a total of ten cycles.

8.1.11.9 CBRN materials shall be washed and dried for a total of five cycles.

8.1.11.10 CBRN material samples shall be tumbled for 20 minutes and shall be removed immediately at the end of the drying cycle.

8.1.12 Flexural Fatigue Procedure for CBRN Barrier Layer.

8.1.12.1 Samples shall be subjected to flexural fatigue in accordance with ASTM F 392, *Standard Test Method for Flex Durability of Flexible Barrier Materials,* with the modifications in 8.1.12.2 through 8.1.12.5.

8.1.12.2 Samples shall be flexed at 21°C, ±3°C (70°F, ±5°F), and a relative humidity of 65 percent, ±5 percent.

8.1.12.3 In lieu of Flexing Conditions A, B, C, D, or E, test samples shall have a flex period of 3000 cycles at 45 cycles per minute.

8.1.12.4 The mandrels shall be spaced at a distance of 235 mm, ±6 mm (9¼ in., ±¼ in.) in the starting position and 83 mm (3¼ in.) at the closed position.

8.1.12.5 One cycle shall consist of a full flex and twisting action.

8.1.13 Abrasion Procedure for CBRN Barrier Layer. Specimens shall be abraded in accordance with ASTM D 4157, *Standard Test Method for Abrasion Resistance of Textile Fabrics (Oscillatory Cylinder Method),* under the following conditions:

(1) A 2.3 kg (5 lb) tension weight shall be used.
(2) A 1.6 kg (3.5 lb) head weight shall be used.
(3) The abradants shall be each of the material layers in the composite that are adjacent to the CBRN barrier layer.
(4) Specimens shall be abraded for a total of 60,000 cycles.
(5) Specimens shall be abraded for half of the cycles against the outer layer of the composite with the specimen facing the outer layer in its normal "as worn" orientation.
(6) Specimens shall be then abraded for the remaining cycles against the inner layer of the composite with the specimen facing the inner layer in its normal "as worn" orientation.
(7) Where the CBRN barrier layer is an external layer or where the composite consists of a single layer, the abradant shall be the CBRN barrier layer. Where the CBRN barrier layer has an exposed film or coating, the film side shall be abraded for a total of 30,000 cycles.

8.2 Flame Resistance Test 1.

8.2.1 Application.

8.2.1.1 This test method shall apply to protective garment textiles, DRDs, hoods, wristlets, gauntlets, helmet covers, shrouds, helmet ear covers, and trim materials.

8.2.1.2 Modifications to this test method for testing woven textile materials shall be as specified in 8.2.8.

8.2.1.3 Modifications to this test method for testing knit textile materials shall be as specified in 8.2.9.

8.2.1.4 Modifications to this test method for testing nonwoven textile materials shall be as specified in 8.2.10.

8.2.1.5 Modifications to this test method for testing trim materials shall be as specified in 8.2.11.

8.2.1.6 Modifications to this test method for testing hood label materials shall be as specified in 8.2.12.

8.2.1.7 Modifications to this test method for testing lettering including transfer film shall be as specified in 8.2.13.

8.2.1.8 Modifications to this test method for testing small specimens not meeting the specimen size requirements in 8.2.2.1 shall be tested as specified in 8.2.14.

8.2.1.9 Modifications to the test method for testing helmet chin straps shall be as specified in 8.2.15.

8.2.1.10 Modifications to the test method for testing DRD materials shall be as specified in 8.2.16.

Copyright National Fire Protection Association
Provided by IHS under license with NFPA
No reproduction or networking permitted without license from IHS
Not for Resale

8.2.2 Samples.

8.2.2.1 Samples shall consist of a 75 mm × 305 mm (3 in. × 12 in.) rectangle with the long dimension parallel to either the warp or filling, the wale or coarse, or the machine or cross-machine direction of the material.

8.2.2.2 Each separable layer of multilayer material systems or composites shall be individually tested.

8.2.3 Specimens.

8.2.3.1 Specimens shall be tested both before and after being subjected to the procedure specified in 8.1.2.

8.2.3.2 All specimens to be tested shall be conditioned as specified in 8.1.3.

8.2.4 Apparatus. The test apparatus specified in ASTM D 6413, *Standard Test Method for Flame Resistance of Textiles (Vertical Test)*, shall be used.

8.2.5 Procedure.

8.2.5.1 Flame resistance testing shall be performed in accordance with ASTM D 6413, *Standard Test Method for Flame Resistance of Textiles (Vertical Test)*.

8.2.5.2 Each specimen shall be examined for evidence of melting or dripping.

8.2.6 Report.

8.2.6.1 Afterflame time and char length shall be recorded and reported for each specimen. The average afterflame time and char length for each material in each direction tested shall be calculated, reported, and recorded. The afterflame time shall be recorded and reported to the nearest 0.2 second and the char length to the nearest 3 mm (⅛ in.).

8.2.6.2 Observations of melting or dripping for each specimen shall be recorded and reported.

8.2.7 Interpretation.

8.2.7.1 Pass or fail performance shall be based on any observed melting or dripping, the average afterflame time, and the average char length.

8.2.7.2 Failure in either direction shall constitute failure of the material.

8.2.8 Specific Requirements for Testing Woven Textile Materials.

8.2.8.1 Five specimens from each of the warp and filling directions shall be tested. No two warp specimens shall contain the same warp yarns, and no two filling specimens shall contain the same filling yarns.

8.2.8.2 Samples for conditioning shall be at least a 1 m (39 in.) square of each material.

8.2.8.3 Testing shall be performed as specified in 8.2.2 through 8.2.7.

8.2.9 Specific Requirements for Testing Knit Textile Materials.

8.2.9.1 Five specimens from each of the wale and course directions shall be tested.

8.2.9.2 Samples for conditioning shall include material that is a minimum of 75 mm × 305 mm (3 in. × 12 in.).

8.2.9.3 Testing shall be performed as specified in 8.2.2 through 8.2.7.

8.2.10 Specific Requirements for Testing Nonwoven Textile Materials.

8.2.10.1 Five specimens from each of the machine and cross-machine directions shall be tested.

8.2.10.2 Samples for conditioning shall include material that is a minimum of 75 mm × 305 mm (3 in. × 12 in.).

8.2.10.3 Testing shall be performed as specified in 8.2.2 through 8.2.7.

8.2.11 Specific Requirements for Testing Trim Materials.

8.2.11.1 Five trim specimens for flammability testing shall be at least 50 mm (2 in.) wide and no more than 75 mm (3 in.) wide. Where trim material specimens are not wide enough to fit into the test frame, a narrower test frame of sufficient width to accommodate the available trim width shall be constructed. The cut edge of the trim specimen shall be oriented so that it is exposed directly to the burner flame.

8.2.11.2 Samples for conditioning shall include material sewn onto a 1 m (39 in.) square of ballast material no closer than 50 mm (2 in.) apart in parallel strips. The ballast material shall be as specified in AATCC 135, *Dimensional Changes in Automatic Home Laundering of Woven and Knit Fabrics*. Specimens shall be removed from the ballast material prior to testing.

8.2.11.3 Testing shall be performed in only one direction.

8.2.11.4 Testing shall be performed as specified in 8.2.2 through 8.2.7.

8.2.12 Specific Requirements for Testing Hood Label Materials.

8.2.12.1 Five specimens of hood labels attached to the hood material shall be tested. The hood label specimen shall be cut from conditioned samples so that the edge of the hood label is at the bottom of the specimen.

8.2.12.2 Samples for conditioning shall be whole hoods, including the label as normally attached.

8.2.12.3 Testing shall be performed as specified in 8.2.2 through 8.2.7 with the flame applied to the edge of the label.

8.2.13 Specific Requirements for Testing Lettering Including Transfer Film.

8.2.13.1 Lettering, including transfer film, shall be applied to outer shell material meeting the requirements of this standard for testing as specified in 8.2.13.2. The method of applying lettering, including transfer film, shall be representative of methods used in attaching lettering during the manufacture of the protective element.

8.2.13.2 Lettering specimens for flammability testing shall be at least 50 mm (2 in.) and no more than 75 mm (3 in.) in width. Specimens shall be selected where lettering is most dense.

8.2.13.3 Samples for conditioning shall include material sewn onto a 1 m (39 in.) square of ballast material no closer than 50 mm (2 in.) apart in parallel strips. The ballast material shall be as specified in AATCC 135, *Dimensional Changes in Automatic Home Laundering of Woven and Knit Fabrics*. Specimens shall be removed from the ballast material prior to testing.

8.2.13.4 Testing shall be performed as specified in 8.2.2 through 8.2.7.

8.2.14 Specific Requirements for Testing Small Specimens.

8.2.14.1 Five specimens attached to the textile layer as used in the protective garments shall be tested. The specimens shall

Copyright National Fire Protection Association
Provided by IHS under license with NFPA
No reproduction or networking permitted without license from IHS
Not for Resale

be attached to the textile layer such that the bottom (exposure) edge of the item coincides with the bottom (exposure) edge of the textile support layer.

8.2.14.2 Samples for conditioning shall be at least 1 m (39 in.) square of the textile layer on which the small specimens are attached.

8.2.14.3 Testing shall be performed as specified in 8.2.2 through 8.2.7. Char length shall not be measured.

8.2.15 Specific Requirements for Test Helmet Chin Straps.

8.2.15.1 Five specimens of helmet chin straps, excluding hook and pile fasteners, shall be tested. Specimens shall be at least 305 mm (12 in.) in length by the widest width of the chin strap used on the helmet.

8.2.15.2 Testing shall be performed in only one direction.

8.2.15.3 Samples for conditioning shall be chin strap materials.

8.2.15.4 The specimen holder shall be modified to permit the testing of narrow specimens.

8.2.15.5 Testing shall be performed as specified in 8.2.2 through 8.2.7.

8.2.16 Specific Requirements for Testing Drag Rescue Device (DRD) Materials.

8.2.16.1 Five specimens of the materials used in the construction of DRDs shall be tested.

8.2.16.2 DRD materials shall be at least 305 mm (12 in.) in length by the widest width of the material used in the DRD.

8.2.16.3 Testing shall be performed in only one direction.

8.2.16.4 Testing shall be performed as specified in 8.2.2 through 8.2.7.

8.3 Flame Resistance Test 2.

8.3.1 Application. This test method shall apply to protective helmets.

8.3.2 Samples. Helmets shall be conditioned as specified in 8.1.3.

8.3.3 Specimens. Three helmets shall be tested.

8.3.4 Apparatus.

8.3.4.1 A standard Bunsen burner shall be used.

8.3.4.2 The Bunsen burner shall be fueled by a bottled methane gas, 99 percent pure.

8.3.4.3 A control valve system with a delivery rate designed to furnish gas to the burner under a pressure of 0.035 kg/cm^2, ±0.003 kg/cm^2 (½ psi, +0.1/–0 psi), at the burner shall be utilized.

8.3.4.4 The barrel of the Bunsen burner shall be 13 mm, ±3 mm (½ in., ± ⅛ in.), in diameter. A flame spreader shall not be used.

8.3.5 Procedure A.

8.3.5.1 The helmet shall be positioned on the ISO size J headform specified in Figure 8.16.4.1(d) according to the helmet's positioning index.

8.3.5.2 The flame of the Bunsen burner shall be adjusted to produce a 50 mm, ±1.5 mm (2 in., ±1⁄16 in.), blue flame with an inner cone of 25 mm, ±1.5 mm (1 in., ±1⁄16 in.). The temperature of the flame at the tip of the inner cone shall be measured with a K-type thermocouple and shall be 1200°C, ±100°C (2192°F, ±180°F). The tip of the inner cone of the flame shall then be applied to the helmet shell from below the helmet at an angle of 90 degrees to the basic plan, as shown in Figure 8.3.5.2, as follows:

(1) At the intersection of the front edge of the brim and the midsagittal plane
(2) At the intersection of the each side of the brim and the coronal plane
(3) At one random location on the edge of the brim to be determined by test laboratory

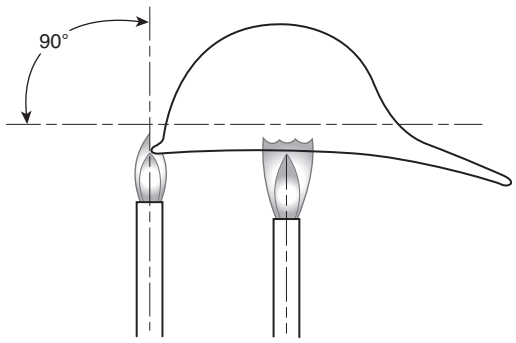

FIGURE 8.3.5.2 Test Procedure A.

8.3.5.3 The flame shall be applied for 15 seconds, +1/–0 second. The flame shall then be removed and the duration of the after flame and afterglow shall be measured, reported, and recorded.

8.3.6 Procedure B.

8.3.6.1 Specimens of faceshield/goggle components shall be attached to an appropriate test fixture so that the lower edge of the specimen is exposed. The test setup shall be as shown in Figure 8.3.6.1.

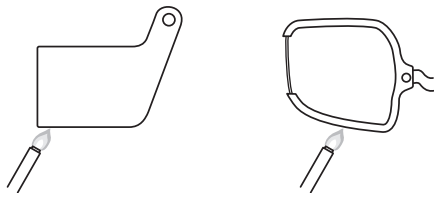

FIGURE 8.3.6.1 Test Procedure B.

8.3.6.2 The flame of the bunsen burner shall be adjusted to produce a 50 mm, ±1.5 mm (2 in., ±1⁄16 in.), blue flame with an inner cone of 25 mm, ±1.5 mm (1 in., ±1⁄16 in.). The temperature of the flame at the tip of the inner cone shall be measured with a K-type thermocouple and shall be 1200°C, ±100°C (2192°F, ±180°F). The tip of the inner cone of the flame shall then be applied to the outer edge of the specimen at the lowest exposed edge of the specimen. The burner shall be held to the test point of the specimen at an angle of 45 degrees, ±10 degrees.

Copyright National Fire Protection Association
Provided by IHS under license with NFPA
No reproduction or networking permitted without license from IHS
Not for Resale

8.3.6.3 After 15 seconds, +1/–0 second, the flame shall be removed and the duration of the afterflame shall be measured, reported, and recorded.

8.3.7 Procedure C.

8.3.7.1 The helmet shall be positioned on the ISO size J headform specified in Figure 8.16.4.1(d) according to the helmet positioning index. The helmet shall then be placed under the radiant heat source specified in 8.1.6, while the basic plane of the headform is parallel to the radiant heat source as shown in Figure 8.3.7.1.

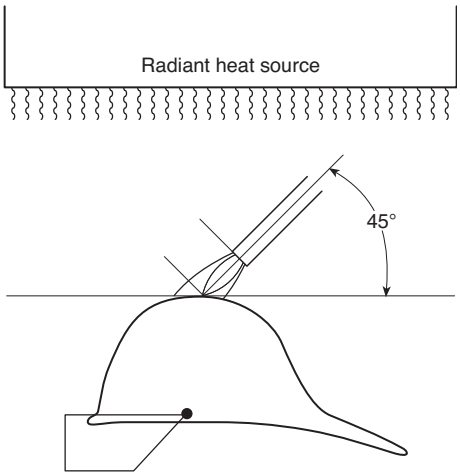

FIGURE 8.3.7.1 Test Procedure C.

8.3.7.2 The flame of the Bunsen burner shall be adjusted to produce a 50 mm, ±1.5 mm (2 in., ±1⁄16 in.), blue flame with an inner cone of 25 mm, ±1.5 mm (1 in., ±1⁄16 in.). The temperature of the flame at the tip of the inner cone shall be measured with a K-type thermocouple and shall be 1200°C, ±100°C (2192°F, ±180°F).

8.3.7.3 Specimen helmets shall be positioned so that the area to be tested receives a radiant heat flux of 1.0 W/cm^2, ±0.1 W/cm^2. After 60 seconds, +5/–0 seconds, exposure to the radiant flux and without removing the radiant heat source, the tip of the inner cone of the Bunsen burner flame shall be applied against the helmet test area. The application of the flame shall create an angle of 45 degrees, ±10 degrees, with the plane tangent to the test area at the point of contact.

8.3.7.4 After 15 seconds, +1/–0 second, the flame shall be removed and the duration of the afterflame and afterglow shall be measured, reported, and recorded.

8.3.8 Procedure D.

8.3.8.1 Specimen helmets with faceshield/goggle component attachment hardware in place shall be positioned on the ISO size J headform specified in Figure 8.16.4.1 according to the helmet positioning index.

8.3.8.2 The flame of the Bunsen burner shall be adjusted to produce a 50 mm, ±1.5 mm (2 in., ±1⁄16 in.), blue flame with an inner cone of 25 mm, ±1.5 mm (1 in., ±1⁄16 in.), The temperature of the flame at the tip of the inner cone shall be measured with a K-type thermocouple and shall be 1200°C, ±100°C (2192°F, ±180°F). The tip of the inner cone of the flame shall then be applied to each faceshield/goggle comment attachment hardware location along the helmet brim line from below the brim of the helmet at an angle of 90 degrees to the basic plane.

8.3.8.3 The flame shall be applied for 15 seconds, +1/–0 second. The flame shall then be removed and the duration of the afterflame and afterglow shall be measured, reported, and recorded.

8.3.9 Report.

8.3.9.1 Afterflame times shall be recorded and reported for each specimen at each flame impingement location.

8.3.9.2 The afterflame times shall be recorded and reported to the nearest 0.2 second.

8.3.10 Interpretation.

8.3.10.1 Pass/fail performance shall be based on the longest measured afterflame time.

8.4 Flame Resistance Test Three

8.4.1 Application.

8.4.1.1 This test method shall apply to protective gloves, glove gauntlets, and glove wristlets.

8.4.1.2 Modifications to this test method for evaluation of glove body composites shall be as specified in 8.4.8.

8.4.1.3 Modifications to this test method for evaluation of glove gauntlets shall be as specified in 8.4.9.

8.4.1.4 Modifications to this test method for evaluation of glove wristlets shall be as specified in 8.4.10.

8.4.2 Specimens.

8.4.2.1 Three specimens shall be tested for each material.

8.4.3 Samples.

8.4.3.1 Samples shall be prepared for each glove, glove body, and glove wristlet material.

8.4.3.2 Samples shall be conditioned as specified in 8.1.2 and 8.1.3.

8.4.4 Apparatus.

8.4.4.1 The test apparatus specified in Method 5905.1, *Flame Resistance of Material; High Heat Flux Flame Contact*, of Federal Test Method Standard 191A, *Textile Test Methods*, shall be used.

8.4.4.2 A freestanding flame height indicator shall be used to assist in adjusting the burner flame height. The indicator shall mark a flame height of 75 mm (3 in.) above the top of the burner.

8.4.4.3 A specimen support assembly shall be used that consists of a frame and steel rod of 2 mm (1⁄16 in.) in diameter to support the specimen in an L-shaped position as shown in Figure 8.4.4.3.

8.4.4.4 The horizontal portion of the specimen shall be not less than 50 mm (2 in.) and the vertical portion shall be not less than 100 mm (4 in.). The specimen shall be held at each end by spring clips under light tension as shown in Figure 8.4.4.3.

8.4.5 Procedure.

8.4.5.1 A balance shall be used to determine the weight of each specimen to the nearest 0.1 g (0.04 oz) before and after testing.

Copyright National Fire Protection Association
Provided by IHS under license with NFPA
No reproduction or networking permitted without license from IHS
Not for Resale

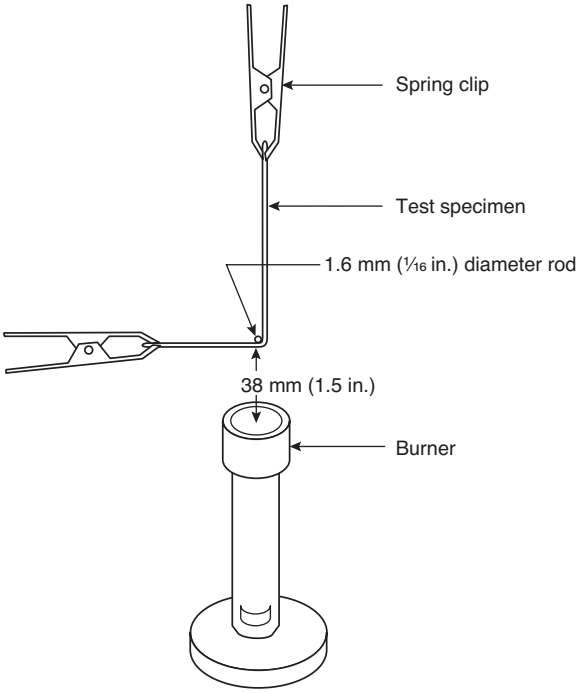

FIGURE 8.4.4.3 Relationship of Test Material to Burner.

8.4.5.2 The burner shall be ignited and the test flame shall be adjusted to a height of 75 mm (3 in.) with the gas on/off valve fully open and the air supply completely and permanently off, as it is important that the flame height be closely controlled. The 75 mm (3 in.) height shall be obtained by adjusting the orifice in the bottom of the burner so that the top of the flame is level with the marked flame height indicator.

8.4.5.3 With the specimen mounted in the support assembly, the burner shall be moved so that the middle of the folded corner projects into the flame 38 mm (1½ in.) as shown in Figure 8.4.4.3.

8.4.5.4 The burner flame shall be applied to the specimen for 12 seconds. After 12 seconds, the burner shall be removed.

8.4.5.5 The afterflame time shall be measured as the time, in seconds, to the nearest 0.2 second that the specimen continues to flame after the burner is removed from the flame.

8.4.5.6 Each layer of the specimen shall be examined for melting or dripping.

8.4.5.7 Each tested sample shall be reconditioned as specified in 8.1.3 and then weighed to the nearest 0.1 g (0.04 oz).

8.4.5.8 The specimen then shall be further examined for char length. The char length shall be determined by measuring the length of the tear through the center of the charred area as specified in 8.4.5.8.1 through 8.4.5.8.4.

8.4.5.8.1 The specimen shall be folded lengthwise and creased, by hand, along a line through the highest peak of the charred area.

8.4.5.8.2 The hook shall be inserted into a hole punched in the specimen that is 6 mm (¼ in.) in diameter or less. The hole shall be punched out for the hook at one side of the charred area that is 6 mm (¼ in.) from the adjacent outside edge, at the point where the specimen contacted the steel rod, and 6 mm (¼ in.) in from the lower end.

8.4.5.8.3 A weight of sufficient size so that the weight and hook together equal the total tearing weight required by Table 8.4.5.8.3 shall be attached to the hook. The total tearing weight for determining charred length shall be based on the weight of the composite specimen and shall be determined from Table 8.4.5.8.3.

Table 8.4.5.8.3 Determination of Tearing Weight

Specified Weight per Square Yard of Material Before Any Fire-Retardant Treatment or Coating		Total Tearing Weight for Determining Charred Length	
g/m^2	oz/yd^2	kg	lb
68–203	2.0–6.0	0.1	¼
> 203–508	>6.0–15.0	0.2	½
>508–780	>15.0–23.0	0.3	¾
>780	>23.0	0.45	1

8.4.5.8.4 A tearing force shall be applied gently to the specimen by grasping the side of the material at the edge of the char opposite the load and raising the specimen and weight clear of the supporting surface. The end of the tear shall be marked off on the edge and the char length measurement made along the undamaged edge.

8.4.6 Report.

8.4.6.1 The afterflame time and char length shall be recorded and reported for each specimen. The average afterflame time and char length shall also be calculated, recorded, and reported. The afterflame time shall be recorded and reported to the nearest 0.2 second and the char length to the nearest 2.5 mm (0.10 in.).

8.4.6.2 The percent consumed shall be calculated using the following formula:

$$\text{Percent consumed} = \frac{W - R}{W} \times 100$$

where:
W = original preconditioned weight
R = conditioned weight 24 hours after testing

8.4.6.2.1 The percent consumed shall be recorded and reported for each specimen to the nearest 0.1 percent. The average percent consumed shall be calculated, recorded, and reported to the nearest 0.1 percent.

8.4.6.3 Observations of melting or dripping for each specimen shall be recorded and reported.

8.4.7 Interpretation. Pass or fail performance shall be based on melting or dripping, the average afterflame time, and the average char length.

8.4.8 Specific Requirements for Testing Glove Body Composites.

8.4.8.1 Samples for conditioning shall be glove composite pouches as specified in 8.4.8.3.

Copyright National Fire Protection Association
Provided by IHS under license with NFPA
No reproduction or networking permitted without license from IHS
Not for Resale

8.4.8.2 Specimens shall be representative of each glove body composite construction.

8.4.8.3 For glove body composites, specimens for conditioning shall be in the form of an 200 mm × 200 mm (8 in. × 8 in.) pouch. The pouch shall be made of two glove body composite swatches. The two composite swatches shall be 200 mm × 200 mm (8 in. × 8 in.), and shall be constructed to simulate the actual layers of the glove, arranged in proper order. Each of the two composite swatches shall be stitched on all four sides using the same thread as used in the glove construction. The two composite swatches shall then be sewn together, inner liner to inner liner, on three sides using the same thread as used in the glove construction.

8.4.8.4 After conditioning, the pouch and necessary stitching shall be cut to form 50 mm × 150 mm (2 in. × 6 in.) specimens for testing.

8.4.9 Specific Requirements for Testing Protective Glove Gauntlets.

8.4.9.1 Samples for conditioning shall be glove gauntlet composite swatches as specified in 8.4.9.3.

8.4.9.2 Specimens shall be representative of the glove gauntlet composite construction.

8.4.9.3 For glove gauntlet composites, samples for conditioning shall include glove material that is a minimum of 200 mm (8 in.) square consisting of the composite used in the actual glove gauntlet construction with the layers arranged in proper order and stitched using the same thread used in the construction of the glove gauntlet.

8.4.9.4 After conditioning, the necessary stitching shall be cut to form 50 mm × 150 mm (2 in. × 6 in.) specimens for testing.

8.4.10 Specific Requirements for Testing Protective Glove Wristlets.

8.4.10.1 Samples for conditioning shall be glove wristlet composite swatches as specified in 8.4.10.3.

8.4.10.2 Specimens shall be representative of the glove wristlet composite construction.

8.4.10.3 For glove wristlet composites, samples for conditioning shall include wristlet material.

8.4.10.4 After conditioning, the material shall be cut to form 50 mm × 150 mm (2 in. × 6 in.) specimens for testing. Specimens shall not include seams where multiple layers are involved. The swatch may be left stitched, restituted, or otherwise held together at the ends of the swatch for placement on the test apparatus. No stitching or binding mechanism shall be used in the test area.

8.5 Flame Resistance Test Four.

8.5.1 Application. This test method shall apply to protective footwear.

8.5.2 Samples.

8.5.2.1 Samples shall be complete footwear.

8.5.2.2 Samples shall be conditioned as specified in 8.1.3.

8.5.3 Specimens. Three complete footwear items shall be tested.

8.5.4 Apparatus.

8.5.4.1 The test apparatus shall consist of a burner, crucible tongs, support stand, utility clamp, stopwatch, butane gas, gas regulator valve system, and measuring scale.

8.5.4.1.1 The burner shall be a high temperature, liquefied petroleum type Fisher burner.

8.5.4.1.2 The stopwatch or other device shall measure the burning tie to the nearest 0.1 second.

8.5.4.1.3 The butane shall be of commercial grade, at least 99.0 percent pure.

8.5.4.1.4 The gas regulator valve system shall consist of a control valve system with a delivery rate designed to furnish gas to the burner under a pressure of 17.3 kPa, ±1.7 kPa (2.5 psi, ±0.25 psi), at the reducing valve. The flame height shall be adjusted at the reducing valve producing a pressure at the burner of approximately 0.7 kPa (0.1 psi).

8.5.4.2 A freestanding flame height indicator shall be used to assist in adjusting the burner flame height. The indicator shall mark a flame height of 75 mm (3 in.) above the top of the burner.

8.5.4.3 A specimen support assembly shall be used to support the footwear specimen above the burner flame.

8.5.5 Procedure.

8.5.5.1 The burner shall be ignited and the test flame shall be adjusted to a height of 75 mm (3 in.) with the gas on/off valve fully open and the air supply completely and permanently off, as it is important that the flame height be closely controlled. The 75 mm (3 in.) height shall be obtained by adjusting the orifice in the bottom of the burner so that the top of the flame is level with the marked flame height indicator.

8.5.5.2 With the specimen mounted in the support assembly, the burner shall be moved so that the flame contacts the specimen at a distance of 38 mm (1½ in.) at the angles in the areas shown in Figure 8.5.5.2.

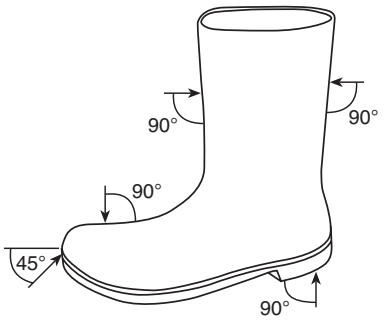

FIGURE 8.5.5.2 Test Areas.

8.5.5.3 The burner flame shall be applied to the specimen for 12 seconds. After 12 seconds, the burner shall be removed.

8.5.5.4 The afterflame time shall be measured as the time, in seconds, to the nearest 0.2 second that the specimen continues to flame after the burner is removed from the flame.

8.5.5.5 Following the flame exposure, the specimen shall be removed and examined for burnthrough. Each layer of the specimen shall be examined for melting or dripping.

--`,,```,,,,````-`-`,,`,,`,`,,`---

Copyright National Fire Protection Association
Provided by IHS under license with NFPA
No reproduction or networking permitted without license from IHS

Not for Resale

8.5.6 Report.

8.5.6.1 The afterflame time shall be recorded and reported for each specimen. The average afterflame time shall be calculated and reported. The afterflame time shall be recorded and reported to the nearest 0.2 second.

8.5.6.2 Observations of burnthrough, melting, or dripping for each specimen shall be recorded and reported.

8.5.7 Interpretation. Pass or fail performance shall be based on any observed burnthrough, melting, or dripping, and the average afterflame time.

8.6 Heat and Thermal Shrinkage Resistance Test.

8.6.1 Application.

8.6.1.1 This test method shall apply to the following:

(1) Garment outer shells, moisture barriers, thermal barriers, collar linings, winter liners, trim, lettering, and other materials used in garment construction, including, but not limited to, padding, reinforcement, labels, interfacing, binding, hanger loops, emblems or patches, and elastic and hook and pile fasteners (when used where in contact with the wearer's body)
(2) Moisture barrier seams
(3) Hood, wristlet, helmet ear cover materials, helmet shrouds, helmet covers, innermost glove liner, trim, and label materials
(4) Protective helmets, protective gloves, and protective footwear

8.6.1.2 Modifications to this test method for testing garment outer shell, moisture barrier, thermal barrier, winter liner, helmet ear cover, helmet shrouds, helmet covers, and innermost glove liner materials shall be as specified in 8.6.8.

8.6.1.3 Modifications to this test method for testing garment moisture barrier seams shall be as specified in 8.6.9.

8.6.1.4 Modifications to this test method for testing other garment, trim, and label materials shall be as specified in 8.6.10.

8.6.1.5 Modifications to this test method for testing hardware shall be as specified in 8.6.11.

8.6.1.6 Modifications to this test method for testing helmets shall be as specified in 8.6.12.

8.6.1.7 Modifications to this test method for testing gloves shall be as specified in 8.6.13.

8.6.1.8 Modifications to this test method for testing footwear shall be as specified in 8.6.14.

8.6.1.9 Modifications to this test method for testing lettering, including transfer film, shall be as specified in 8.6.15.

8.6.1.10 Modifications to this test method for testing hoods shall be as specified in 8.6.16.

8.6.2 Samples. All samples shall be conditioned as specified in 8.1.3.

8.6.3 Specimens.

8.6.3.1 Only heat resistance testing shall be conducted on a minimum of three specimens for each moisture barrier seam, hardware item, glove liner material, trim material, label material, other protective garment materials, helmets, and footwear not specified in 8.6.3.2.

8.6.3.2 Both heat and thermal shrinkage resistance testing shall be conducted on a minimum of three specimens of whole gloves and for each garment outer shell, moisture barrier, thermal liner, winter liner, and helmet ear cover. Each separable layer of multilayer material systems or composites shall be tested as an individual layer.

8.6.4 Apparatus.

8.6.4.1 The test oven shall be as specified in ISO 17493, *Clothing and equipment for protection against heat — Test method for convective heat resistance using a hot air circulating oven.* Testing shall be carried out at a temperature of 260°C, +6/–0°C (500°F, +10/–0°F).

8.6.5 Procedure.

8.6.5.1 Specimen marking and measurements shall be conducted in accordance with the procedure specified in AATCC 135, *Dimensional Changes in Automatic Home Laundering of Woven and Knit Fabrics.*

8.6.5.2 The specimen shall be suspended by metal hooks at the top and centered in the oven so that the entire specimen is not less than 50 mm (2 in.) from any oven surface or other specimen, and air is parallel to the plane of the material.

8.6.5.3 The oven door shall not remain open more than 15 seconds. The air circulation shall be shut off while the door is open and turned on when the door is closed. The total oven recovery time after the door is closed shall not exceed 30 seconds.

8.6.5.4 The specimen, mounted as specified, shall be exposed in the test oven for 5 minutes, +0.15/–0 minute. The test exposure time shall begin when the test thermocouple recovers to a temperature of 260°C, +6°/–0°C (500°F, +10°/–0°F).

8.6.5.5 Immediately after the specified exposure, the specimen shall be removed and examined for evidence of ignition, melting, dripping, or separation.

8.6.5.6 After the specified exposure, the specimen also shall be measured to determine pass or fail performance. Knit fabric shall be pulled to its original dimensions and shall be allowed to relax for 1 minute prior to measurement to determine pass or fail performance.

8.6.6 Report.

8.6.6.1 Where applicable, observations of ignition, melting, dripping, or separation shall be recorded and reported for each specimen.

8.6.6.2 Where applicable, the percent change in the width and length dimensions of each specimen shall be calculated. Results shall be recorded and reported as the average of all three specimens in each dimension.

8.6.7 Interpretation.

8.6.7.1 Where applicable, any evidence of ignition, melting, dripping, or separation on any specimen shall constitute failing performance.

8.6.7.2 Where applicable, the average percent change in both dimensions shall be used to determine pass or fail performance. Failure in any one dimension constitutes failure for the entire sample.

Copyright National Fire Protection Association
Provided by IHS under license with NFPA
No reproduction or networking permitted without license from IHS
Not for Resale

8.6.8 Specific Requirements for Testing Garment Outer Shell, Moisture Barrier, Thermal Liner, Winter Liner Materials, Helmet Ear Cover, Helmet Shrouds, Helmet Covers, and Glove Liner Materials.

8.6.8.1 Samples for conditioning shall be at least 1 m (1 yd) square of each material.

8.6.8.2 Each specimen shall be 380 mm × 380 mm, ±13 mm (15 in. × 15 in., ±½ in.), and shall be cut from the fabric to be utilized in the construction of the clothing item.

8.6.8.3 Specimens shall be tested both before and after being subjected to the procedure specified in 8.1.2.

8.6.8.4 Testing shall be performed as specified in 8.6.2 through 8.6.7.

8.6.8.5 For protective garment outer shell and collar lining materials, any evidence of charring on any specimen of outer shell fabric shall also constitute failing performance in addition to 8.6.7.1.

8.6.9 Specific Requirements for Testing Moisture Barrier Seams.

8.6.9.1 Samples for conditioning shall be a minimum of 1 linear m (1 linear yd) with a minimum of 150 mm (6 in.) of material on each side of the seam.

8.6.9.2 Moisture barrier seam specimens shall consist of two 75 mm × 150 mm (3 in. × 6 in.) pieces of moisture barrier fabric utilized in the garment and sewn together with the same thread, stitch type, and seam type as used in the moisture barrier, with seam-sealing material applied.

8.6.9.3 Specimens shall be tested with the sealed seam oriented vertically and shall be tested both before and after being subjected to the procedure specified in 8.1.2.

8.6.9.4 For moisture barrier seam seal materials, observations shall be limited to seam material ignition and dripping.

8.6.9.5 Testing shall be performed as specified in 8.6.2 through 8.6.7. Thermal shrinkage shall not be measured.

8.6.10 Specific Requirements for Testing Other Garment, Clothing, Trim, and Label Materials.

8.6.10.1 Samples for conditioning shall include specimens attached to the textile layer as used in the protective garments positioned no closer than 50 mm (2 in.) apart in parallel strips. The textile material shall be at least 1 m (1 yd) square of the textile layer on which the specimens are attached. Specimens shall be removed from the textile material prior to testing, with the exception of label materials, which shall remain attached to the textile layer.

8.6.10.2 Specimen length shall be 150 mm (6 in.), other than for textiles utilized in the clothing item in lengths less than 150 mm (6 in.), where length shall be the same as utilized in the clothing item. Specimen width shall be 150 mm (6 in.), other than for textiles utilized in the clothing item in widths less than 150 mm (6 in.), where widths shall be the same as utilized in the clothing item.

8.6.10.3 Specimens shall be tested both before and after being subjected to the procedure specified in 8.1.2.

8.6.10.4 Testing shall be performed as specified in 8.6.2 through 8.6.7. Thermal shrinkage shall not be measured.

8.6.11 Specific Requirements for Testing Hardware.

8.6.11.1 A minimum of three complete hardware items shall be tested.

8.6.11.2 Observations of hardware condition following heat exposure shall be limited to ignition.

8.6.11.3 Hardware shall be evaluated for functionality within 10 minutes following removal from the oven.

8.6.11.4 Testing shall be performed as specified in 8.6.2 through 8.6.7. Thermal shrinkage shall not be measured.

8.6.12 Specific Requirements for Testing Helmets.

8.6.12.1 Samples for conditioning shall include complete helmets.

8.6.12.2 Three complete helmet specimens shall be tested.

8.6.12.3 Helmets with ear covers deployed and with the faceshield/goggle component in the stowed position shall be seated on the nonconductive test headform specified in Figure 8.6.12.3 and shall be positioned according to the helmet positioning index. The headform with helmet attached shall be placed in the center of the test oven with the centerline of the front of the helmet facing the airflow. Only one helmet specimen shall be tested at a time.

8.6.12.4 The minimum interior dimensions of the test oven shall be 610 mm × 610 mm × 610 mm (24 in. × 24 in. × 24 in.).

8.6.12.5 The test thermocouple shall be positioned so that it is level with the horizontal centerline of a mounted test helmet. The thermocouple shall be equidistant between the vertical centerline of a mounted test helmet placed in the middle of the oven and the oven wall where the airflow enters the test chamber.

8.6.12.6 Following removal from the oven, the helmet shall be allowed to cool at room temperature for not less than 2 minutes. The shell distortion shall then be measured at the front, back, and sides at eight points radially separated by 45 degrees relative to their original position. The helmet shall be examined to ascertain any effects of the heat exposure.

8.6.12.7 Testing shall be performed as specified in 8.6.2 through 8.6.7. Thermal shrinkage shall not be measured.

8.6.13 Specific Requirements for Testing Gloves.

8.6.13.1 Samples for conditioning shall be whole gloves.

8.6.13.2 Conditioning shall be performed as specified in 8.1.2.

8.6.13.3 Specimens shall include complete gloves with labels.

8.6.13.4 The minimum interior dimensions of the test oven shall be 610 mm × 610 mm × 610 mm (24 in. × 24 in. × 24 in.).

8.6.13.5 The glove body shall be filled to capacity with nominal 4 mm (⅛ in.) sized perforated soda-lime or borosilicate glass beads, taking care to tightly pack the glass beads into the fingers of the glove and glove body. The beads shall be 21°C, ±3°C (71°F, ±5°F). The opening of the glove shall be clamped together, and the specimen shall be suspended by the clamp in the oven so that the entire glove is not less than 50 mm (2 in.) from any oven surface and not less than 150 mm (6 in.) from any other specimen, and airflow is parallel to the plane of the material. One to three glove specimens shall be placed in the test oven at one time. The glove specimens shall be suspended such that each specimen is the same distance from the airflow source, so that no glove sample is blocking the airflow to other glove samples.

Copyright National Fire Protection Association
Provided by IHS under license with NFPA
No reproduction or networking permitted without license from IHS
Not for Resale

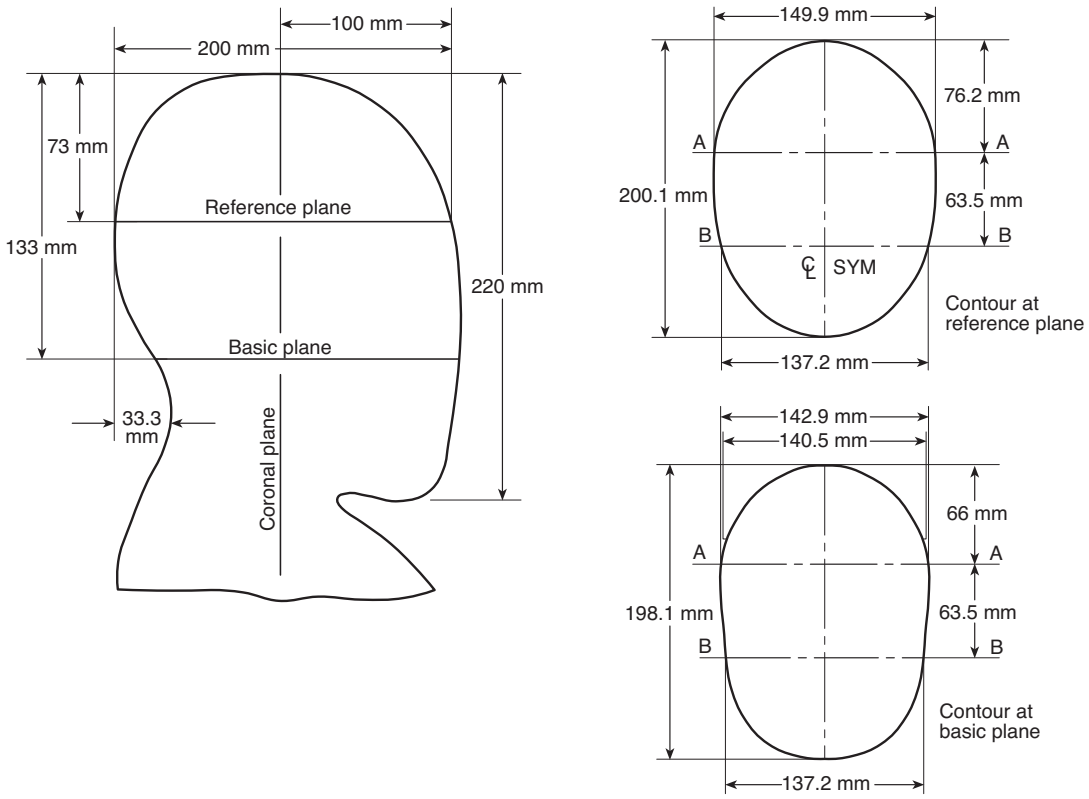

FIGURE 8.6.12.3 Nonconductive Test Headform.

8.6.13.6 The glove specimen dimensions also shall be measured to determine pass or fail. The length measurement of the glove specimen shall be from the tip of the middle finger to the end of the glove body on the palm side. The width measurement of the glove specimen shall be the width measurement on the palm side 25 mm (1 in.) below the base of the fingers.

8.6.13.7 The percent change in the width and length dimensions of each specimen shall be calculated. Results shall be recorded and reported as the average of all three specimens in each dimension.

8.6.13.8 Specimens shall be donned and flexed as specified in 8.1.10 before and after the heat exposure.

8.6.13.9 Testing shall be performed as specified in 8.6.2 through 8.6.7.

8.6.14 Specific Requirements for Testing Footwear.

8.6.14.1 Samples for conditioning shall be whole boots.

8.6.14.2 Footwear specimens for testing shall be size 9.

8.6.14.3 Footwear specimens shall include sole, heel, and upper. Footwear specimens shall be filled to capacity with nominal 4 mm (⅛ in.) sized perforated soda-lime or borosilicate glass beads. Any closures shall be fastened.

8.6.14.4 The test thermocouple shall be positioned so that it is level with the horizontal centerline of a footwear test specimen. The thermocouple shall be equidistant between the vertical centerline of a footwear test specimen placed in the middle of the oven and the oven wall where the airflow enters the test chamber.

8.6.14.5 The minimum interior dimensions of the test oven shall be 610 mm × 610 mm × 610 mm (24 in. × 24 in. × 24 in.).

8.6.14.6 Footwear specimens shall be placed in the center of the test oven with the centerline of the front of the specimen facing the airflow. Only one footwear specimen shall be tested at a time.

8.6.14.7 Testing shall be performed as specified in 8.6.2 through 8.6.7. Thermal shrinkage shall not be measured.

8.6.14.8 A minimum of three footwear items shall be tested.

8.6.14.9 Following removal from the oven, the specimen shall be allowed to cool at room temperature for not less than 5 minutes, +15/−0 seconds. The test specimen shall be examined inside and outside for evidence of melting, separation, or ignition, within 10 minutes, +15/−0 seconds, after removal from the oven.

8.6.14.10 Each test specimen shall then be reconditioned as specified in 8.1.3 and then reexamined inside and outside for evidence of melting, separation, or ignition.

8.6.14.11 Footwear functionality shall be determined by flexing the specimen for 100,000 cycles performed in accordance with Appendix B of FIA 1209, *Whole Shoe Flex*, with the exception that water shall not be used. Specimens shall then be examined for evidence of sole separation, seam separation, or component breakage.

8.6.14.12 After flexing, the footwear specimen shall be placed in a container that allows its immersion in tap water, treated with a dye and surfactant that achieves a surface tension of 35 dynes/cm, ±5 dynes/cm, to a height within 25 mm

Copyright National Fire Protection Association
Provided by IHS under license with NFPA
No reproduction or networking permitted without license from IHS
Not for Resale

(1 in.) of the footwear height as determined in 6.10.3.1. Plain white paper toweling shall be placed inside the footwear specimen such that the paper toweling intimately contacts all areas inside the footwear specimen to a height within 25 mm (1 in.) from the footwear height as determined in 6.10.3.1.

8.6.14.13 After 2 hours, ±10 minutes, the paper toweling shall be removed and examined for evidence of liquid leakage.

8.6.14.14 The appearance of any liquid on the removed paper toweling shall be recorded and reported as a failure for the tested specimen. One or more footwear specimens failing this test shall constitute failing performance.

8.6.15 Specific Requirements for Testing Lettering, Including Transfer Film.

8.6.15.1 Lettering, including transfer film, shall be applied to outer shell material, meeting the requirements of this standard, for testing as specified in 8.6.15.4.

8.6.15.2 Lettering specimens for heat resistance testing shall be at least a 150 mm (6 in.) square. Samples shall be selected where lettering is most dense.

8.6.15.3 Samples for conditioning shall be outer shell material of 1 m (1 yd) square with letters applied.

8.6.15.4 Testing shall be performed as described in 8.6.2 through 8.6.7. Thermal shrinkage shall not be measured.

8.6.16 Specific Requirements for Testing Hoods.

8.6.16.1 Samples for conditioning shall include complete hoods, with labels.

8.6.16.2 Hoods shall be tested both before and after the conditioning specified in 8.1.2.

8.6.16.3 Testing shall be performed as specified in 8.6.4 through 8.6.6 unless modified herein.

8.6.16.4 Hoods shall be donned on an nonconductive test headform specified in Figure 8.6.12.3. The dimensions of the face opening shall be measured as specified in 8.47.4.2. Measurements shall also be made at the back and both sides of the hood from the top of the hood to the basic plane. The location of the basic plane on the hood shall be marked at each location.

8.6.16.5 The headform with hood attached shall be placed in the center of the test oven with the centerline of the front of the hood facing the airflow.

8.6.16.6 The minimum interior dimensions of the test oven shall be 610 mm × 610 mm × 610 mm (24 in. × 24 in. × 24 in.).

8.6.16.7 The test thermocouple shall be positioned so that it is level with the horizontal centerline of a mount test hood. The thermocouple shall be equidistant between the vertical centerline of a mounted test hood placed in the middle of the oven wall where the airflow enters the test chamber.

8.6.16.8 Following removal from the oven, the hood shall be examined for evidence of ignition, melting, dripping, or separation. The hood shall also be allowed to cool at room temperature for not less than 2 minutes. The hood opening shall be measured as specified in 8.47.4.6. The distance from the top of the hood to the three marks along the basic plane shall also be measured.

8.6.16.9 The percentage change in the hood opening dimensions and the distances between the top of the hood and the marks along the basic plane shall be calculated and reported for each specimen. The average percentage change shall be calculated for each individual dimension and used to determine pass or fail performance.

8.6.16.10 Failure in any one dimension constitutes failure of the entire sample.

8.7 Conductive Heat Resistance Test 1.

8.7.1 Application.

8.7.1.1 This test method shall apply to protective gloves and footwear upper material.

8.7.1.2 Modifications for this test method for testing gloves shall be as specified in 8.7.7.

8.7.1.3 Modifications for this test method for testing footwear shall be as specified in 8.7.8.

8.7.2 Samples.

8.7.2.1 Samples for conditioning shall be whole boots and glove composite pouches as specified in 8.7.7.2.

8.7.2.2 Samples shall be conditioned as specified in 8.1.3.

8.7.3 Specimens. A total of three specimens of gloves and three specimens of footwear shall be tested.

8.7.4 Procedure. Specimens shall be tested in accordance with ASTM F 1060, *Standard Test Method for Thermal Protective Performance of Materials for Protective Clothing for Hot Surface Contact*, with the following modifications:

(1) Specimens shall be tested using an exposure temperature of 280°C (536°F). The pressure applied during the test shall be as specified in 8.7.7 and 8.7.8.
(2) The time in seconds to pain and to second-degree burn and blister, as predicted by the Stoll Human Tissue Burn Tolerance Criteria, shall be recorded.
(3) The time to thermal end point shall be determined graphically from the recorder chart of the sensor response and the criterion overlay prepared in Section 10.5 of ASTM F 1060, *Standard Test Method for Thermal Protective Performance of Materials for Protective Clothing for Hot Surface Contact*. The overlay shall be positioned on the recorder chart, matching the zero of the overlay with the point on the recorder chart corresponding to the time at which the sensor and specimen were placed in direct contact with the hot plate. The horizontal (time) axis shall be placed in line with the initial trace of the pen. The overlay shall be kept square with the recorder chart. Exposure time shall be read to the nearest 0.1 second from the overlay chart at the point where the sensor response and the tissue tolerance curve cross.

8.7.5 Report.

8.7.5.1 The time to pain and time to second-degree burn for each specimen shall be recorded and reported.

8.7.5.2 The average time to pain and time to second-degree burn shall be calculated, recorded, and reported.

8.7.5.3 Where the time to pain or time to second-degree burn is greater than 30 seconds, the time to pain or time to second-degree burn shall be recorded and reported as ">30 seconds" for time to pain and ">30 seconds" for time to second-degree burn.

--`,,```,,,,````-`-`,,`,,`,`,,`---

Copyright National Fire Protection Association
Provided by IHS under license with NFPA
No reproduction or networking permitted without license from IHS
Not for Resale

8.7.6 Interpretation.

8.7.6.1 Pass or fail determinations shall be based on the average time to pain and time to second-degree burn of all specimens tested.

8.7.6.2 If an individual result from any test set varies more than ±8 percent from the average result, the results from the test set shall be discarded and another set of specimens shall be tested.

8.7.7 Specific Requirements for Testing Gloves.

8.7.7.1 Specimens shall be representative of the glove body composite construction at the palm of the hand, palm side of the fingers, and at the back of the hand from the finger crotch to 25 mm (1 in.) beyond the wrist crease and includes the back of the thumb.

8.7.7.2 Specimens for conditioning shall be in the form of an 200 mm × 200 mm (8 in. × 8 in.) pouch. The pouch shall be made of two glove body composite swatches. The two composite swatches shall be 200 mm × 200 mm (8 in. × 8 in.) and shall be constructed to simulate the actual layers of the glove, arranged in proper order. Each of the two composite swatches shall be stitched on all four sides using the same thread as used in the glove construction. The two composite swatches shall then be sewn together inner liner to inner liner, on three sides using the same thread as used in the glove construction.

8.7.7.3 Specimens shall be tested after being subjected to the procedure specified in 8.1.3 both before and after laundering as specified in 8.1.2.

8.7.7.4 Specimens shall also be tested after being subjected to wet conditioning as specified in 8.1.8 both before and after laundering as specified in 8.1.2.

8.7.7.5 Testing shall be performed as specified in 8.7.2 through 8.7.6.

8.7.7.6 After the specimens are conditioned as specified in 8.7.7.3 and 8.7.7.4, the pouch and necessary stitching shall be cut to form 100 mm × 150 mm (4 in. × 6 in.) specimens for testing.

8.7.7.7 The pressure applied during the test shall be 3.45 kPa, ±0.35 kPa (0.5 psi, ±0.05 psi), for specimens representative of the glove body composite construction at the palm of the hand and the palm side of the fingers.

8.7.7.8 The pressure applied during the test shall be 13.75 kPa, ±1.35 kPa (2 psi, ±0.2 psi), for specimens representative of the glove body composite construction at the back of the hand.

8.7.8 Specific Requirements for Testing Footwear Upper Materials.

8.7.8.1 Footwear specimens shall include the thinnest portions of the footwear upper, including booties where provided.

8.7.8.2 Testing shall be performed as specified in 8.7.2 through 8.7.6.

8.7.8.3 A pressure of 3.45 kPa, ±0.35 KPa (½ psi, ±0.05psi) shall be applied during the test.

8.8 Conductive Heat Resistance Test 2.

8.8.1 Application. This test method shall apply to the protective footwear sole.

8.8.2 Samples.

8.8.2.1 Samples for conditioning shall be whole footwear.

8.8.2.2 Samples shall be preconditioned as specified in 8.1.3.

8.8.3 Specimens. A minimum of three complete footwear items, including booties where provided, shall be tested.

8.8.4 Apparatus. The apparatus shall consist of an iron plate measuring 25 mm × 150 mm × 460 mm (1 in. × 6 in. × 18 in.) and an oven capable of heating the plate to a temperature of 500°C (932°F), a Type J or Type K thermocouple, and a meter to read the thermocouple temperature.

8.8.5 Procedure.

8.8.5.1 The thermocouple shall be affixed to the insole surface of the specimen next to the foot, directly above the ball of the foot. The thermocouple shall be taped to the surface with electrical tape to hold it onto the insole surface.

8.8.5.2 The plate shall be heated to a temperature of 500°C, ±10°C (932°F, ±18°F), and shall maintain this temperature throughout the test period.

8.8.5.3 The specimen shall be filled with 4.55 kg (10 lb) of 5 mm (⅜ in.) steel balls. The weight of the steel balls shall be evenly distributed inside the boot. The specimen shall be placed on the plate in the upright position for 30 seconds.

8.8.5.4 The thermocouple temperature shall be recorded at 30.0 seconds, +2/−0 seconds, after the specimen is placed on the heated metal plate.

8.8.6 Report.

8.8.6.1 The temperature at 30 seconds of exposure shall be recorded and reported for each specimen.

8.8.6.2 The average temperature at 30 seconds of exposure for all specimens shall also be calculated, recorded, and reported.

8.8.7 Interpretation. The average temperature at 30 seconds of exposure for all specimens shall be used to determine pass or fail performance.

8.9 Radiant Heat Resistance Test 1.

8.9.1 Application. This test method shall apply to protective footwear.

8.9.2 Samples.

8.9.2.1 Samples for conditioning shall be complete footwear.

8.9.2.2 Samples shall be tested after being subjected to the conditioning procedure specified in 8.1.3.

8.9.2.3 Samples shall also be tested separately following conditioning as specified in 8.1.9.

8.9.3 Specimens. A minimum of three complete footwear items, including booties where provided, shall be tested.

8.9.4 Apparatus. The apparatus shall consist of the following:

(1) Radiometer with a spectral response flat to within ±3 percent of not less than 1.10 mm to 10.0 mm (0.04 in. to 0.4 in.) with an accuracy of ±5 percent
(2) Radiant panel with an effective radiating surface of not less than 150 mm × 150 mm (6 in. × 6 in.) and an emittance approximating that of a blackbody of 1000°K, ±200°K (1340°F, ±360°F)
(3) Thermocouple with meter
(4) Test chamber that prevents interference from air movement

Copyright National Fire Protection Association
Provided by IHS under license with NFPA
No reproduction or networking permitted without license from IHS
Not for Resale

8.9.5 Procedure.

8.9.5.1 Tests shall be done on the toe, vamp, quarter, gusset if present, and shaft. If different types or thickness of materials are utilized for other areas of the upper, these areas shall also be tested.

8.9.5.2 The radiant panel shall be placed in front of the radiometer, parallel to the plane tangent to the radiometer. The radiant panel shall be adjusted to obtain a stable, uniform irradiance of 1.0 W/cm^2, +0.01/−0 W/cm^2, over a minimum 75 mm (3 in.) diameter circle located on the above plane and centered at the center of the test area. Calibration shall be achieved when the irradiance changes by less than 10 percent during a 3-minute period.

8.9.5.3 The thermocouple shall be affixed to the inside surface of the lining next to the foot in the center of the test area. The radiometer shall be replaced with the protective footwear with the test area oriented parallel to the plane tangent to the heat source at the same distance from the heat source. The area shall be exposed for 1 minute, +5/−0 seconds.

8.9.5.4 The thermocouple temperature shall be recorded at 1 minute, +5/−0 seconds, of exposure.

8.9.6 Report.

8.9.6.1 The temperature at 1 minute of exposure shall be recorded and reported for each specimen.

8.9.6.2 The average temperature at 1 minute of exposure for all specimens shall also be calculated, recorded, and reported.

8.9.7 Interpretation. The average temperature at 1 minute of exposure for all specimens tested shall be used to determine pass or fail performance.

8.10* Thermal Protective Performance (TPP) Test.

8.10.1 Application.

8.10.1.1* This test method shall apply to multilayer protective garment composites, gloves, glove gauntlets, wristlets, helmet ear covers, shrouds, and hoods including single layer knit hoods that are worn in contact with the skin.

8.10.1.2 Modifications to this test method for testing garment composites shall be as specified in 8.10.8.

8.10.1.3 Modifications to this test method for testing hoods shall be as specified in 8.10.9.

8.10.1.4 Modifications to this test method for testing wristlets shall be as specified in 8.10.10.

8.10.1.5 Modifications to this test method for testing gloves shall be as specified in 8.10.11.

8.10.1.6 Modifications to this test method for testing glove gauntlets shall be as specified in 8.10.12.

8.10.1.7 Modifications to this test method for testing helmet ear covers shall be as specified in 8.10.13.

8.10.2 Samples.

8.10.2.1 Samples shall measure 150 mm × 150 mm, ±6 mm (6 in. × 6 in., ±¼ in.) and shall consist of all layers representative of the clothing item to be tested.

8.10.3 Specimens.

8.10.3.1 Thermal protective performance testing shall be conducted on three specimens.

8.10.3.2 Specimens shall be tested both before and after preconditioning as specified in 8.1.2 and then conditioning as specified in 8.1.3.

8.10.4 Apparatus. The test apparatus specified in ISO 17492, *Clothing for protection against heat and flame — determination of heat transmission on exposure to both flame and radiant heat,* shall be used.

8.10.5 Procedure. Thermal protective performance testing shall be performed in accordance with ISO 17492, *Clothing for protection against heat and flame — determination of heat transmission on exposure to both flame and radiant heat,* shall be used with the following modifications:

(1) An exposure heat flux of 84 kW/m^2, ±2 kW/m^2, (2.0 cal/cm^2s, ±0.05 cal/cm^2) shall be used.
(2) The contact configuration shall be used for testing of all material specimens.
(3) The thermal threshold index analysis method shall be used with calculations made using the heat flux in calories per square centimeter per second and reported as the TPP rating.

8.10.6 Report.

8.10.6.1 The individual test TPP rating of each specimen shall be recorded and reported.

8.10.6.2 The average TPP rating shall be calculated and reported.

8.10.6.3 Where a TPP rating is greater than 60, then the TPP rating shall be recorded and reported as ">60."

8.10.7 Interpretation.

8.10.7.1 Pass or fail determinations shall be based on the average reported TPP rating of all specimens tested.

8.10.7.2 Where an individual result from any test set varies more than ±8 percent from the average result, the results from the test set shall be discarded and another set of specimens shall be tested.

8.10.8 Specific Requirements for Testing Garments.

8.10.8.1 Specimens shall consist of outer shell, moisture barrier, and thermal barrier. Winter liners shall not be included in the test composite. Collar lining fabric shall be permitted to be included in the protective garment collar fabric composite specimen. Specimens shall not include seams. Specimens shall not be stitched to hold individual layers together during testing.

8.10.8.2 Samples for conditioning shall be at least a 1 m (1 yd) square of each material.

8.10.8.3 Testing shall be performed as described in 8.10.2 through 8.10.7.

8.10.9 Specific Requirements for Testing Protective Hoods.

8.10.9.1 Specimens shall consist of materials from the portion of the protective hood that covers the neck and facial area. Specimens shall not include seams. Specimens shall not be stitched to hold individual layers together during testing.

8.10.9.2 Samples for conditioning shall include hood material that is a minimum of 175 mm (7 in.) square.

8.10.9.3 Testing shall be performed as described in 8.10.2 through 8.10.7.

Copyright National Fire Protection Association
Provided by IHS under license with NFPA
No reproduction or networking permitted without license from IHS
Not for Resale

8.10.10 Specific Requirements for Testing Protective Wristlets.

8.10.10.1 Specimens shall consist of materials from the portion of the protective wristlet that covers the wrist area. Specimens shall not include seams. Specimens shall not be stitched to hold individual layers together during testing.

8.10.10.2 Samples for conditioning shall include wristlet material that is a minimum of 180 mm (7 in.) square.

8.10.10.3 Testing shall be performed as described in 8.10.2 through 8.10.7.

8.10.11 Specific Requirements for Testing Protective Glove Body Composites.

8.10.11.1 Samples for conditioning shall be glove composite pouches as specified in 8.10.11.3.

8.10.11.2 Specimens shall be representative of each glove body composite construction.

8.10.11.3 For glove body composites, specimens for conditioning shall be in the form of a 200 mm × 200 mm (8 in. × 8 in.) pouch. The pouch shall be made of two glove body composite swatches. The two composite swatches shall be 200 mm × 200 mm (8 in. × 8 in.) and shall be constructed to simulate the actual layers of the glove arranged in proper order. Each of the two composite swatches shall be stitched on all four sides using the same thread as used in the glove construction. The two composite swatches shall then be sewn together, inner liner to inner liner, on three sides using the same thread as used in the glove construction.

8.10.11.4 Specimens shall be tested both before and after preconditioning as specified in 8.1.2 and then conditioning as specified in 8.1.3.

8.10.11.5 After conditioning, the pouch and stitching shall be cut to form 175 mm × 175 mm (7 in. × 7 in.) specimens for testing. Specimens shall not include seams where multiple layers are involved. Specimens shall not be stitched to hold individual layers together during testing.

8.10.11.6 Testing shall be performed as described in 8.10.2 through 8.10.7.

8.10.12 Specific Requirements for Testing Protective Glove Gauntlets.

8.10.12.1 Samples for conditioning shall be glove gauntlet composite swatches as specified in 8.10.12.3.

8.10.12.2 Specimens shall be representative of the glove gauntlet composite construction.

8.10.12.3 For glove gauntlet composites, samples for conditioning shall include glove material that is a minimum of 200 mm (8 in.) square consisting of the composite used in the actual glove gauntlet construction with the layers arranged in proper order and stitched using the same thread used in the construction of the glove gauntlet.

8.10.12.4 Specimens shall be tested both before and after preconditioning as specified in 8.1.2 and then conditioning as specified in 8.1.3.

8.10.12.5 After conditioning, the stitching shall be cut to form 175 mm × 175 mm (7 in. × 7 in.) specimens for testing. Specimens shall not include seams where multiple layers are involved. Specimens shall not be stitched to hold individual layers together during testing.

8.10.12.6 Testing shall be performed as described in 8.10.2 through 8.10.7.

8.10.13 Specific Requirements for Testing Helmet Ear Covers.

8.10.13.1 Specimens shall consist of materials from the portion of the ear covers that cover the ear and neck area. Specimens shall not include seams. Specimens shall not be stitched to hold individual layers together during testing.

8.10.13.2 Samples for conditioning shall include ear cover material that is a minimum of 175 mm (7 in.) square.

8.10.13.3 Testing shall be performed as described in 8.10.2 through 8.10.7.

8.11 Thread Melting Test.

8.11.1 Application. This test method shall apply to each type of sewing thread used in the construction of protective garments, hoods, wristlets, gloves, helmets, helmet covers, shrouds, and footwear.

8.11.2 Samples. Samples for conditioning shall be lengths of thread 150 mm (6 in.) or greater.

8.11.3 Specimens.

8.11.3.1 A total of three different specimens of each thread type shall be tested.

8.11.3.2 All specimens shall be conditioned as specified in 8.1.3 prior to testing.

8.11.4 Apparatus.

8.11.4.1* An electrically heated stage, having a circular depression large enough to insert a micro cover glass shall be used. The stage shall have a variable transformer controlling the rate of heat input into the stage.

8.11.4.2 The following equipment shall also be used:

(1) Armored stem thermometer with a range of 20°C to 160°C, accurate to ½°C
(2) Armored stem thermometer with a range of 150°C to 300°C, accurate to 1°C
(3) Low powered magnifying glass,
(4) Two micro cover glasses
(5) Spatula, pick needle, or other instrument for applying pressure to the cover glasses
(6) Soxhlet extraction apparatus

8.11.4.3 The following reagents shall be used:

(1) Chloroform, USP
(2) *U.S. Pharmacopoeia reference standards for melting point or other pure materials for calibrating the apparatus

8.11.5 Procedure.

8.11.5.1 The specimen shall be extracted with chloroform for a minimum of 20 extractions in a Soxhlet extractor and dried. The specimen shall then be cut into lengths of 2 mm (1/16 in.) or less.

8.11.5.2 The apparatus shall be calibrated by determining the melting point of a pure material of known melting point. The melting point of the pure material shall be in the range of the melting point of the fiber being tested. The value obtained shall agree within +1°C of the known value.

8.11.5.3 If the approximate melting point of the specimen is not known before testing, it shall be determined by a trial run.

Copyright National Fire Protection Association
Provided by IHS under license with NFPA
No reproduction or networking permitted without license from IHS
Not for Resale

8.11.5.4 In subsequent determinations immediately following the trial run or initial determination, the stage in each case shall be cooled to approximately 50°C below the expected melting point, before the specimen is placed for testing.

8.11.5.5 The specimen shall be placed in a small mound on a cover glass and covered with another cover glass. The two cover glasses shall be pressed together gently but firmly, and placed in the circular depression on the stage. The temperature of the stage shall be raised with some rapidity to within 15°C of the expected melting point, and thereafter at a rate of 3°C to 4°C per minute. At this rate of temperature rise, a slight pressure shall be applied on the upper glass cover by pressing with a spatula, pick needle, or other instrument so that the complete fiber is in contact with the cover glass.

8.11.5.6 The specimen shall be observed with the aid of a magnifying glass, and the melting point taken as the temperature at which flow of the specimen is observed. At the observed melting point, the temperature shall be read to the nearest degree C.

8.11.6 Report.

8.11.6.1 The melting point of the sample unit shall be the average of the results obtained from the specimens tested, and shall be recorded and reported to the nearest degree C.

8.11.6.2 The pass/fail results for each specimen tested shall be recorded and reported.

8.11.7 Interpretation. One or more thread specimens failing this test shall constitute failing performance for the thread type.

8.12 Tear Resistance Test.

8.12.1 Application.

8.12.1.1 This test shall apply to woven materials used in protective garments, hoods, helmet covers, shrouds, and wristlets.

8.12.1.2 This test shall also apply to bootie materials where a bootie is used as part of the garment construction.

8.12.2 Samples.

8.12.2.1 Samples for conditioning shall be at least 1 m (1 yd) square of material.

8.12.2.2 Samples shall be tested both before and after being conditioned as specified in 8.1.2.

8.12.3 Specimens.

8.12.3.1 A minimum of five specimens in each of the warp, machine or coarse, direction and the filling, cross-machine or wales, direction shall be tested.

8.12.3.2 Where the material is isotropic, then ten specimens shall be tested.

8.12.4 Procedure.

8.12.4.1 Specimens shall be tested in accordance with ASTM D 5587, *Standard Test Method for the Tearing Strength of Fabrics by Trapezoidal Procedure.*

8.12.4.2 Slippage of the specimen shall not be permitted.

8.12.5 Report.

8.12.5.1 The tear resistance of an individual specimen shall be the average of the five highest peak loads of resistance registered.

8.12.5.2 The tear strength of each specimen shall be recorded and reported to the nearest 0.5 N (0.1 lbf) of force.

8.12.5.3 An average tear strength shall be calculated, recorded, and reported for warp and filling directions.

8.12.6 Interpretation.

8.12.6.1 Pass or fail performance shall be based on the average tear resistance in the warp and filling directions.

8.12.6.2 Failure in any one direction constitutes failure for the material.

8.12.7 Specific Requirements for Testing Protective Garments.

8.12.7.1 Where configured as individual barrier layers, specimens of garment moisture barriers, thermal barriers, and winter liners, where provided, shall be tested.

8.12.7.2 Where one or more of these barriers are configured as a single barrier layer by bonding or laminating individual barriers together so that the individual layers do not retain their individuality and are not separable, they shall be tested as a composite.

8.13 Burst Strength Test.

8.13.1 Application. This test shall apply to knit materials used in protective garments, hoods, and wristlets.

8.13.2 Samples.

8.13.2.1 Samples shall be conditioned as specified in 8.1.3.

8.13.2.2 Samples for conditioning shall be 1 m (1 yd) square of material for knit materials provided in roll form, and 1 m (1 yd) in length for knit materials provided in tubular form.

8.13.3 Specimens. A total of ten specimens shall be tested.

8.13.4 Procedure. Specimens shall be tested as specified in ASTM D 3787, *Standard Test Method for Hydraulic Bursting Strength of Knitted Goods and Nonwoven Fabrics — Ball Burst Testing Method.*

8.13.5 Report. The burst strength of each specimen shall be recorded and reported. The average burst strength of all specimens shall be calculated, recorded, and reported.

8.13.6 Interpretation. The average burst strength shall be used to determine pass or fail performance.

8.14 Seam-Breaking Strength Test.

8.14.1 Application.

8.14.1.1 This test method shall apply to seams used in protective clothing items, including booties where present, clothing item wristlets, glove wristlets, glove gauntlets, and hoods.

8.14.1.2 Modifications to this test method for testing clothing item wristlets, glove wristlets, and glove gauntlets shall be as specified in 8.14.7.

8.14.2 Samples.

8.14.2.1 Samples for conditioning shall be 1 m (1 yd) length of seam.

8.14.2.2 Samples shall be submitted for testing after being subjected to the procedure specified in 8.1.2.

8.14.3 Specimens.

8.14.3.1 A minimum of five seam specimens representative of the clothing item shall be tested for each seam type.

8.14.3.2 The five seam specimens shall be straight seams. Seam specimens shall be permitted to be cut from the finished

--`,,```,,,,````-`-`,,`,,`,`,,`---

Copyright National Fire Protection Association
Provided by IHS under license with NFPA
No reproduction or networking permitted without license from IHS
Not for Resale

clothing item or shall be permitted to be prepared by joining two pieces of the clothing item fabric. Where specimens are cut from finished clothing items, such specimens shall be preconditioned after being cut from the finished clothing item.

8.14.3.2.1 Where two pieces of woven clothing item fabric are joined, the woven fabric seam specimen shall be prepared as specified in 8.2.1.2 of ASTM D 1683, *Standard Test Method for Failure in Sewn Seams of Woven Fabrics*, and shall use the same thread, seam type, and stitch type as used in the finished clothing item.

8.14.3.2.2 Where two pieces of knit or stretch woven clothing item fabric are joined, the knit fabric seam specimen shall be prepared as specified in 7.2.2 of ASTM D 3940, *Standard Test Method for Bursting Strength (Load) and Elongation of Sewn Seams of Knit or Woven Stretch Textile Fabrics*, using the same thread, seam type, and stitch type as used in the finished clothing item.

8.14.3.2.3 Specimens of clothing item seam assemblies constructed from other than woven or knit textiles shall be tested as specified in 8.14.3.2.1.

8.14.3.2.4 Where a piece of woven clothing item fabric and a knit or stretch woven fabric are joined, the seam specimen shall be prepared as specified in 8.2.1.2 of ASTM D 1683, *Standard Test Method for Failure in Sewn Seams of Woven Fabrics*, and shall use the same thread, seam type, and stitch type as used in the finished clothing item.

8.14.4 Procedure.

8.14.4.1 All woven seam assemblies shall be tested in accordance with ASTM D 1683, *Standard Test Method for Failure in Sewn Seams of Woven Fabrics*. The test machine shall be operated at a rate of 305 mm/min (12 in./min).

8.14.4.2 All knit seam assemblies and all stretch woven seam assemblies shall be tested in accordance with ASTM D 3940, *Standard Test Method for Bursting Strength (Load) and Elongation of Sewn Seams of Knit or Woven Stretch Textile Fabrics*.

8.14.4.3 Combination woven and knit or stretch woven seam assemblies shall be tested in accordance with ASTM D 1683, *Standard Test Method for Failure in Sewn Seams of Woven Fabrics*. The test machine shall be operated at a rate of 304.8 mm/min (12 in./min).

8.14.5 Report.

8.14.5.1 The seam-breaking strength for each seam specimen shall be recorded and reported.

8.14.5.2 The average seam-breaking strength for each seam type shall also be recorded and reported.

8.14.5.3 The type of seams tested shall be recorded and reported as to whether the specimens were cut from the finished clothing item or prepared from fabric samples.

8.14.6 Interpretation. The average seam-breaking strength for each seam type shall be used to determine pass or fail performance.

8.14.7 Specific Requirements for Testing Protective Clothing Item Wristlets, Glove Wristlets, and Glove Gauntlets.

8.14.7.1 Specimens for conditioning and testing shall consist of seams taken from the wristlet/clothing item sleeve, the wristlet/glove body junction, or the gauntlet/glove body junction.

8.14.7.2 Whole gloves shall be permitted to be used for conditioning.

8.14.7.3 Specimen sizes shall be 100 mm × 200 mm (4 in. × 8 in.), with the seam horizontally in the middle of the 100 mm (4 in.) dimension.

8.14.7.4 Evaluation for sewn seam strength in accordance with Section 11.1 of ASTM D 1683, *Standard Test Method for Failure in Sewn Seams of Woven Fabrics*, shall be used to determine pass or fail performance.

8.15 Top Impact Resistance Test (Force).

8.15.1 Application. This test shall apply to complete helmets.

8.15.2 Samples. Samples for conditioning shall be complete helmets.

8.15.3 Specimens.

8.15.3.1 Three helmet specimens shall be tested for each condition specified.

8.15.3.2 Specimens shall be conditioned for each environmental condition specified in 8.1.3, 8.1.4, 8.1.5, 8.1.6, and 8.1.7 prior to each impact.

8.15.3.3 If during testing for the conditions specified in 8.1.3, 8.1.4, and 8.1.7 the helmet is returned to the conditioning environment before the time out of that environment exceeds 4 minutes, the helmet shall be kept in the environment for a minimum of 3 minutes before resumption of testing with that helmet. If the time out of the environment exceeds 4 minutes, the helmet shall be returned to the environment for a minimum of 3 minutes for each minute or portion of a minute that the helmet remained out of the environment in excess of 4 minutes or for a maximum of 24 hours, whichever is less, before resumption of testing with that helmet.

8.15.4 Apparatus.

8.15.4.1 An aluminum ISEA size 7 headform shall be used. The headform shall have a mass of 3.6 kg, ±0.5 kg (8 lb, ±1 lb), and shall be of the nominal dimensions of the headform in Table 8.15.4.1 and Figure 8.15.4.1(a) through Figure 8.15.4.1(c).

8.15.4.2 A steel drop mass of 3.58 kg, ±0.05 kg (7.90 lb, ±0.10 lb), shall be used. The striking face of the drop mass shall be a spherical segment with a radius of 50 mm, ±8 mm (1⅞ in., ±5⁄16 in.), and a chord length of at least 75 mm (3 in.).

8.15.4.3 An electronic force measurement system with the following minimum specifications shall be used:

(1) Range — 4450 N (1000 lbf)
(2) Peak force measurement accuracy — ±2.5 percent
(3) Resolution — 22 N (5 lbf)
(4) Load cell rigidity — 4.4×10^9 N/m (2.5×10^7 lbf/in.)
(5) Minimum mechanical resonant frequency of the headform/load cell system — 5000 Hz
(6) Load cell diameter — 75 mm (3 in.)

8.15.4.4 The system frequency response shall comply with SAE J211, *Instrumentation for Impact Test*, Channel Frequency Class 1000, specifications. The minimum mechanical resonant frequency shall be calculated from the following formula:

$$f = \frac{\left(\sqrt{kg/m}\right)}{2\pi}$$

where:
kg = load cell rigidity [N/m (lbf/ft)]
m = mass of the structure on top of the load cell [kg (slugs)]

Copyright National Fire Protection Association
Provided by IHS under license with NFPA
No reproduction or networking permitted without license from IHS
Not for Resale

Table 8.15.4.1 Data for Contour Drawing of ISEA Headform (all dimensions in mm)

Horizontal Plane	Distance from Datum Plane	Vertical Sections												
		0°	15°	30°	45°	60°	75°	90°	105°	120°	135°	150°	165°	180°
	0-0	99	0	0	0	0	0	0	0	0	0	0	0	0
	1-1	95	22.5	22.5	23	25.5	26.5	28	28.5	31	33	36	39	38.7	40
	2-2	90	39.5	40	40	40.5	40.5	40.5	41.5	43.5	47.5	50	53	53	54.5
	3-3	85	53.5	54	55.7	51.5	50.5	50	51.5	53.5	57	60.5	64	64.5	65.5
	4-4	80	62.5	63	60.9	59	57	57	57.5	60.5	63.5	67.3	70.7	70.7	72.2
	5-5	70	72.5	74	71.5	68.2	65.5	64.5	65.3	68	72	75.7	79.1	80	82
	6-6	60	82	82	79.5	75	71.0	69.4	70.1	73	77.5	81.7	85.1	87.5	87.9
	7-7	50	87.3	87	84.5	79	74	71.5	72	75.7	80.9	85.8	89.4	91	92.3
	8-8	40	90.2	90.5	87.5	81.5	75.5	73.0	73.5	76.9	82.7	88.3	91.3	93.5	95
	9-9	20	94.0	94	90.5	83.5	77.1	73.7	74.2	77.8	84.3	91	95.5	97.6	98.5
Datum Plane	10-10	0	96.5	96.5	93.0	84.6	77.5	73.5	74.2	79	85	92.5	96.5	98.8	99.9
	11-11	20	96.5	96.5	93.0	84.6	77.5	73.5	72	70	78.5	84	90	91	95
	12-12	40	96.5	96.5	93.0	84.6	77.5	73.5	70	63.5	70	75	81	82	84
	13-13	60	96.5	96.5	93.0	84.6	77.5	73.5	68	58	57.5	63	69	69	72
	14-14	80	96.5	96.5	93.0	84.6	77.5	73.5	66	54	48	53	59	60	63
	15-15	100	96.5	96.5	93.0	84.6	77.5	73.5	64	52	48	49	54	56	59
	16-16	115.9	96.5	96.5	96.5	96.5	96.5	96.5	96.5	96.5	96.5	96.5	96.5	96.5	96.5
	17-17	128.6	96.5	96.5	96.5	96.5	96.5	96.5	96.5	96.5	96.5	96.5	96.5	96.5	96.5

Note: All dimensions ±5 mm.

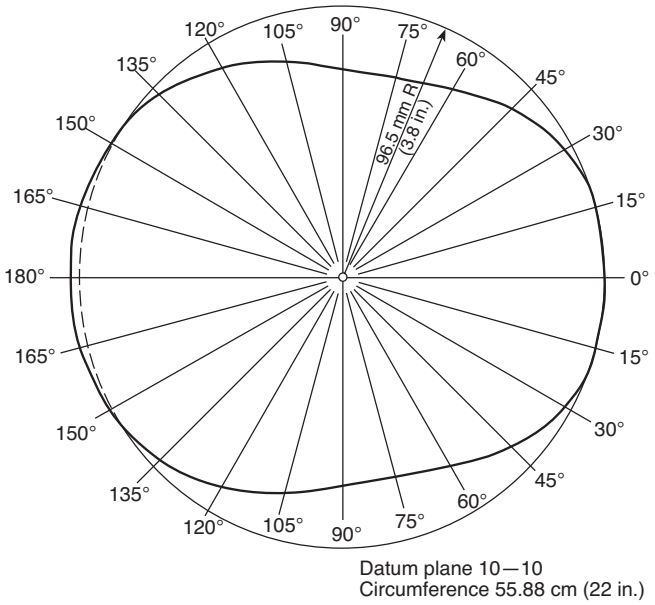

FIGURE 8.15.4.1(a) ISEA Size 7 Headform, Top.

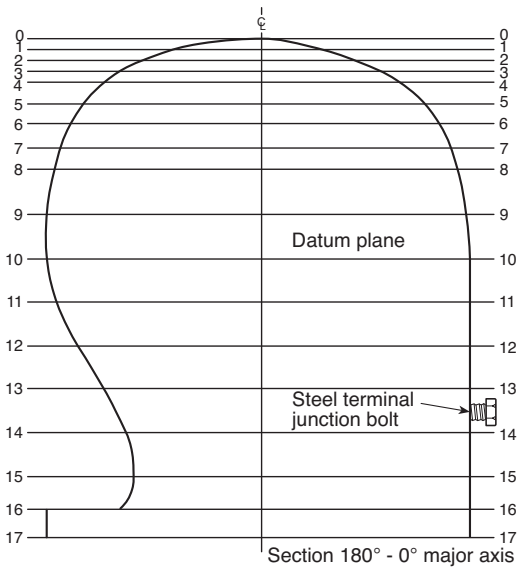

FIGURE 8.15.4.1(b) ISEA Size 7 Headform, Side with Modification for Steel Terminal Junction Bolt.

8.15.4.5 All surfaces in contact with the load cell shall have a surface finish of at least 0.8×10^{-6} m (32×10^{-6} in.) rms. In addition, those surfaces in contact with the load cell shall be flat to within 12.7×10^{-6} m (500×10^{-6} in.).

8.15.4.6 The load cell shall have a backup mass of at least 540 kg (1200 lb). The load cell assembly shall be rigidly mounted between the headform structure and a steel plate at least 305 mm (1 ft) square and 25 mm (1 in.) thick. The backup mass shall be concrete or a rigid material of equal or greater density at least 0.185 m^2 (2 ft^2).

8.15.4.7 The surface of the steel plate, in the area of the load cell assembly mounting, shall be flat within ±0.15 mm (±0.005 in.) and within 1 degree of level. The steel plate shall be rigidly attached to, and in intimate contact with, the backup mass.

Copyright National Fire Protection Association
Provided by IHS under license with NFPA
No reproduction or networking permitted without license from IHS
Not for Resale

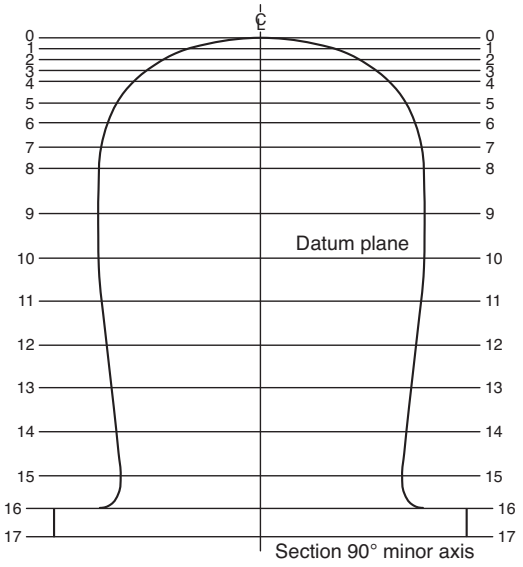

FIGURE 8.15.4.1(c) ISEA Size 7 Headform, Front.

8.15.4.8 The vertical centerline of the drop mass, the headform, and the load cell shall all be colinear within 3 mm (⅛ in.). The sensitive axis of the load cell shall be aligned within 1 degree of vertical. The guide or guides shall be vertical, and in the case of a double guide system, parallel to within 6.4 mm per 3 m (¼ in. per 10 ft) of length.

8.15.4.9* The instrumentation calibration shall be verified at least before and after each test series or at the beginning and end of each day of testing, whichever is the shorter length of time.

8.15.4.10 The test system shall be analyzed dynamically to ensure that any mechanical resonance associated with transducer mountings do not distort the output data.

8.15.4.11 Prior to testing, the instrumentation shall be allowed to warm up until stability is achieved.

8.15.4.12 Throughout calibration, verification, and testing, the ambient temperature shall be 20°C to 28°C (68°F to 82°F), and the relative humidity shall be 30 percent to 70 percent.

8.15.5 Procedure.

8.15.5.1 Where faceshield/goggle component(s) are provided, the device shall be removed from the helmet for this test. Specimen helmets shall be adjusted to a size sufficient to properly fit on the headform. Specimens shall be positioned on the headform with the horizontal center plane parallel within 5 degrees of the reference plane. The front-to-back centerline of the shell shall be within 13 mm (½ in.) of the midsagittal plane of the headform. Specimens shall be subjected to the environmental conditions specified in 8.1.3, 8.1.4, 8.1.5, 8.1.6, and 8.1.7 prior to each impact and within the specified time after being removed from conditioning.

8.15.5.2 The impactor shall be dropped from a height that yields an impact velocity within 2 percent of 5.47 m/sec (17.9 ft/sec). A means of verifying the impact velocity to within 2 percent for each impact shall be incorporated.

8.15.5.3 The verification tests shall demonstrate an accuracy of 2.5 percent or better in the measured force.

8.15.6 Report.

8.15.6.1 The results of each system verification shall be made part of the test results for specimens being tested.

8.15.6.2 The peak force and impact velocity shall be recorded and reported for each test.

8.15.7 Interpretation.

8.15.7.1 Pass or fail performance shall be determined for each specimen.

8.15.7.2 One or more helmet specimens failing this test shall constitute failing performance.

8.16 Impact Resistance Test (Acceleration).

8.16.1 Application. This test shall be applied to complete helmets.

8.16.2 Samples. Samples for conditioning shall be complete helmets.

8.16.3 Specimens.

8.16.3.1 Three helmet specimens shall be tested for each condition specified.

8.16.3.2 Specimens shall be conditioned for each environmental condition specified in 8.1.3, 8.1.4, 8.1.6, and 8.1.7 prior to each impact.

8.16.3.3 When testing helmets following the conditioning environments specified in 8.1.3, 8.1.4, and 8.1.7, and the helmet is returned to the conditioning environment before the time the helmet is out of that conditioning environment exceeds 4 minutes, the helmet shall be kept in the conditioning environment for a minimum of 3 minutes before resumption of testing with that helmet. When the time the helmet is out of the conditioning environment exceeds 4 minutes, before resumption of testing with that helmet, the helmet shall be returned to the conditioning environment for a minimum of 3 minutes for each minute, or portion of a minute, that the helmet remained out of the conditioning environment in excess of 4 minutes, or for a maximum of 24 hours, whichever is less.

8.16.4 Apparatus.

8.16.4.1 An ISO size J headform conforming to the nominal dimensions in Figure 8.16.4.1 shall be used. The ISO size J test headform shall exhibit no resonant frequencies below 3000 Hz, and it shall be made of any low-resonance alloy, such as magnesium K-1A.

8.16.4.2 A drop assembly shall be used. The drop assembly shall consist of the test headform, the accelerometer, and the moving portion of the headform guidance assembly. The drop assembly shall have a total mass of 5.17 kg, ±0.18 kg (11.4 lb, ±0.4 lb).

8.16.4.3 The guidance assembly shall comprise not more than 20 percent of the total mass of the drop assembly.

8.16.4.4 The center of mass of the drop assembly shall lie within a cone of 10 degrees included angle about the vertical, with the apex at the point of impact.

8.16.4.5 A steel test anvil shall be used and shall have a smooth, flat striking surface 125 mm, ±15 mm (5 in., ±1/16 in.), in diameter. The anvil shall be mounted securely on a steel plate at least 305 mm (1 ft) square and 25 mm (1 in.) thick. The steel plate shall be rigidly attached to and in intimate contact with a backup mass of at least 540 kg (1200 lb). The backup mass shall be of concrete or a rigid material of equal or greater density at least 0.185 m^2 (2 ft^2).

Copyright National Fire Protection Association
Provided by IHS under license with NFPA
No reproduction or networking permitted without license from IHS
Not for Resale

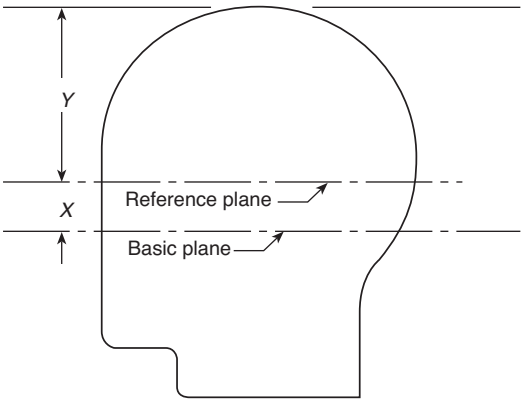

Headform	Size (mm)	*X* (mm)	*Y* (mm)
A	500	24	90
B	540	26	96
J	570	27.5	102.5
M	600	29	107
O	620	30	110

FIGURE 8.16.4.1 Location of Reference Plane.

8.16.4.6 An electronic acceleration measurement system with the following minimum specifications shall be used:

(1) Range — 500 Gn
(2) Peak acceleration measurement — ±2.5 percent accuracy
(3) Resonant frequency — 5000 Hz
(4) Accelerometer shock limit — 2000 Gn
(5) Resolution — 5 Gn

8.16.4.7 The system frequency response shall comply with SAE J211, *Instrumentation for Impact Test*, Channel Frequency Class 1000, specifications. The time duration of acceleration levels shall be measured to within ±0.2 millisecond.

8.16.4.8 A reference anvil shall be substituted for the test anvil to verify the calibration of the acceleration measurement system. The reference anvil shall be constructed of any material that will yield reproducible test results during a period of at least 4 months.

8.16.4.9* For calibration, the center of the reference anvil shall be aligned within 3 mm (⅛ in.) of the impact point on the headform. The sensitive axis of the accelerometer shall be aligned within 1 degree of vertical and shall be colinear within 3 mm (⅛ in.), with the center of the reference anvil and the impact point on the headform. The guide or guides shall be vertical and, in the case of a double guide system, parallel to within 6 mm per 3 m (¼ in. per 10 ft) of length.

8.16.4.10 The instrumentation calibration shall be verified at least before and after each test series or at the beginning and end of each day of testing, whichever is the shorter length of time.

8.16.4.11 The test system shall be analyzed dynamically to ensure that any mechanical resonance does not distort the output data.

8.16.4.12 Prior to testing, the instrumentation shall be allowed to warm up until stability is achieved.

8.16.4.13 Throughout calibration, verification, and testing, the ambient temperature shall be 20°C to 28°C (68°F to 82°F), and the relative humidity shall be 30 percent to 70 percent.

8.16.5 Procedure.

8.16.5.1 A conditioned specimen with faceshield/goggle component(s) removed shall be positioned on the headform with the horizontal center plane of the helmet parallel within 5 degrees of the reference plane of the headform and shall be secured to the drop assembly by its retention system so as to maintain this position during the test. No part of the helmet shell shall be cut away to accommodate the test system, and no part of the test system shall contact the helmet shell either as mounted or during an impact test.

8.16.5.2 The drop assembly with a helmet attached shall be dropped from a height that yields an impact velocity within 2 percent of 6.0 m/sec (19.7 ft/sec). A means of verifying the impact velocity within 2 percent for each impact shall be incorporated in the test system. The acceleration time duration values, peak acceleration, and impact velocity shall be recorded for each test. Each helmet shall be environmentally conditioned prior to each impact in each of the five impact areas specified in Figure 8.1.6.1. Test series number 1 shall require helmet specimens 5, 6, 8, and 10 to be impacted at the front, rear, and side impact areas at a distance of 68 mm, +13/–0 mm (2½ in., +0.5/–0 in.), when measured from the test line to the center of the impact anvil.

8.16.5.3 The impact areas shall be as specified in Figure 8.1.6.1. The top, front, rear, and side areas of the helmet shall be tested.

8.16.5.4 The top impact area shall consist of a 30 mm (1.2 in.) radius measured from a point located on the headform at the junction of the coronal plane and midsagittal plane.

8.16.5.5 The front impact test area shall consist of an area defined as extending forward on the headform from the front vertical transverse plane to the test line.

8.16.5.6 The rear impact test area shall consist of an area defined as extending backward on the headform from the rear vertical transverse plane extending down to the test line.

8.16.5.7 The side test areas shall consist of the areas between the top test area and test line extending from the rear vertical transverse plane and the front vertical transverse plane.

8.16.5.8 Each conditioned specimen in a series shall be impacted one on the top, rear, front, and side test areas of the helmets as defined in Figure 8.1.6.1. At least one impact shall occur in each test area.

8.16.5.9 The center of the test anvil shall be no lower than 63 mm (2½ in.) above the test line and shall be the initial point of contact with the shell during impact.

8.16.5.10 The verification tests shall demonstrate an accuracy of 20 percent or better in the measured acceleration.

8.16.6 Report.

8.16.6.1 The results of each system verification shall be made part of the test results for the specimens being tested.

8.16.6.2 The maximum acceleration, duration of acceleration above 200 Gn, and duration of acceleration above 150 Gn shall be recorded for each test.

8.16.7 Interpretation.

8.16.7.1 Pass or fail performance shall be determined for each specimen.

Copyright National Fire Protection Association
Provided by IHS under license with NFPA
No reproduction or networking permitted without license from IHS
Not for Resale

8.16.7.2 One or more helmet specimens failing this test shall constitute failing performance.

8.17 Faceshield/Goggle Component Lens Impact Resistance Test.

8.17.1 Application. This test shall apply to complete helmets.

8.17.2 Samples. Samples for conditioning shall be complete helmets with faceshield component, or goggle component, or both faceshield and goggle components.

8.17.3 Specimens.

8.17.3.1 Where the manufacturer produces helmets with faceshield components, a minimum of four complete faceshield components shall be tested.

8.17.3.2 Where the manufacturer produces helmets with goggle components, a minimum of four complete goggle components shall be tested.

8.17.3.3 Where the manufacturer produces helmets with both faceshield and goggle components attached to a single helmet, a minimum of four faceshield and four goggle components shall be tested.

8.17.3.4 Samples shall be preconditioned for each of the environmental conditions specified in 8.1.3, 8.1.4, 8.1.5, and 8.1.7.

8.17.3.5 When testing for the conditions specified in 8.1.3, 8.1.4, and 8.1.7 the faceshield/goggle component is returned to the conditioning environment before the time out of that conditioning environment exceeds 4 minutes, the faceshield/goggle shall be kept in the conditioning environment for a minimum of 3 minutes before resumption of testing with that helmet. When the time out of the conditioning environment exceeds 4 minutes, the faceshield/goggle shall be returned to the conditioning environment for a minimum of 3 minutes for each minute or portion of a minute that the faceshield/goggle remained out of the conditioning environment in excess of 4 minutes or for a maximum of 24 hours, whichever is less.

8.17.4 Test One, High Mass Impact.

8.17.4.1 Apparatus.

8.17.4.1.1 An Alderson 50th percentile male headform specified in Figure 8.17.4.1.1 shall be used to hold the protective device. It shall be rigidly mounted in the horizontal position, face up, on a base that has a mass of 30 kg (66 lb) or greater. The static stiffness of the headform shall be such that, when a vertical downward force of 20 kg (44 lb) is applied to the forehead of the headform, the back of the headform shall not deflect more than 2 mm (1/16 in.).

8.17.4.1.2 The missile shall have a 30 degree conical tip with a 1 mm (1/25 in.) radius, shall weigh 500 g (17.6 oz), and shall have a diameter of 25 mm (1 in.). The missile shall be held in position over the headform, tip down, at the designated test height. The missile shall have a heat-treated steel tip.

8.17.4.1.3* The missile shall be dropped through a loose-fitting guide tube having a smooth internal diameter.

8.17.4.2 Procedure.

8.17.4.2.1 Only one faceshield/goggle component shall be tested at a time.

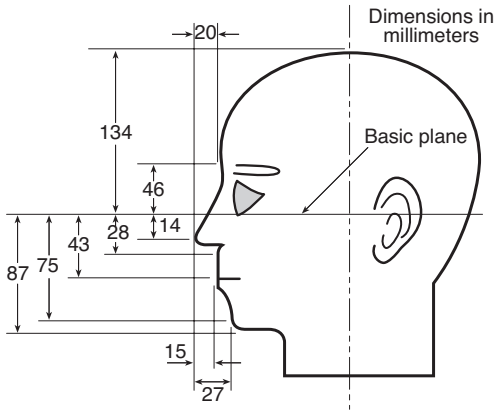

FIGURE 8.17.4.1.1 Alderson Headform.

8.17.4.2.2 The complete helmet shall be placed on the headform in accordance with the helmet positioning index. The alignment shall be such that, with the faceshield/goggle component deployed, when the missile is dropped, it points in line with one of the eyes of the headform.

8.17.4.2.3 The helmet positioning index shall be the vertical distance, as specified by the helmet manufacturer, from the lowest point of the brow at the lateral midpoint of the helmet to the basic plane of the Alderson 50th percentile male headform when the helmet is firmly positioned on the headform.

8.17.4.2.4 The missile shall be dropped from a height of 1300 mm (51 3/16 in.). At least four specimens shall be tested.

8.17.4.3 Report. The pass or fail result for each device shall be recorded and reported.

8.17.5 Test Two, High Velocity Impact.

8.17.5.1 Apparatus.

8.17.5.1.1* The test apparatus shall consist of a device capable of propelling a steel ball reproducible at the velocity designated at 76 m/sec (250 ft/sec). The device shall show a sample standard deviation of not greater than 2 percent of 76 m/sec (250 ft/sec) based on a test series of 30 shots. The velocity of the steel ball shall be determined at a distance not greater than 250 mm (10 in.) from point of impact. The projectiles used in this test shall be 6 mm (¼ in.) diameter steel balls weighing approximately 1.06 g (0.04 oz). These balls are damaged during impact and shall be changed frequently to avoid impacts at unexpected locations and large variations in velocity.

8.17.5.1.2 An Alderson 50th percentile male headform specified in Figure 8.17.4.1.1 shall be used for mounting the helmet with faceshield/goggle component. The headform shall be capable of being rotated on a vertical axis through each corneal vertex in 15 degree increments, from a first position 15 degrees to the nasal side of straight-ahead-viewing out to 90 degrees temporally, given that the headform is vertical such that the two eyes lie in a horizontal reference plane. The headform shall be capable of being raised 10 mm (0.394 in.) and lowered 10 mm (0.394 in.) with respect to the horizontal plane to carry out testing at the 90 degrees angular position.

8.17.5.2 Procedure.

8.17.5.2.1 Only one faceshield/goggle component shall be tested at a time.

Copyright National Fire Protection Association
Provided by IHS under license with NFPA
No reproduction or networking permitted without license from IHS
Not for Resale

8.17.5.2.2 The helmet with faceshield/goggle component deployed shall be mounted to the Alderson 50th percentile male headform in accordance with the helmet positioning index.

8.17.5.2.3 The helmet positioning index shall be the vertical distance, as specified by the helmet manufacturer, from the top lateral midpoint of the faceshield or the faceshield/goggle component to the basic plane of the Alderson 50th percentile male headform where the faceshield or the faceshield/goggle component is positioned on the headform.

8.17.5.2.4 The headform shall be adjusted so that the path of the projectile passes through the center of the left eye. It is then rotated to the first test position, which shall be 15 degrees to the nasal side. The faceshield/goggle component shall then be impacted at the test velocity. The faceshield/goggle component shall be impacted at 0 degrees. The faceshield/goggle component shall be impacted at 45 degrees. The faceshield/goggle component shall be impacted at 90 degrees. The impacts at the 45 degree and 90 degree positions shall be at either 10 mm (⅓ in.) above or 10 mm (⅓ in.) below the plane of the eyes. A single specimen or multiple specimens shall be permitted to be used for the impact testing. At least one impact shall be conducted on each specimen utilized.

8.17.5.2.5 The headform shall be adjusted so that the path of the projectile passes through the center of the right eye. It is then rotated to the first test position, which shall be 15 degrees to the nasal side. The faceshield/goggle component shall then be impacted at the test velocity. The faceshield/goggle component shall be impacted at 0 degrees. The faceshield/goggle component shall be impacted at 45 degrees. The faceshield/goggle component shall be impacted at 90 degrees. The impacts at the 45 degree and 90 degree positions shall be at either 10 mm (⅓ in.) above or 10 mm (⅓ in.) below the plane of the eyes. A single specimen or multiple specimens shall be permitted to be used for the impact testing. At least one impact shall be conducted on each specimen utilized.

8.17.5.2.6 At least eight specimens shall be tested.

8.17.6 Report. The pass or fail performance for each helmet shall be recorded and reported.

8.17.7 Interpretation. One or more helmet specimens failing this test shall constitute failing performance.

8.18 Impact and Compression Tests.

8.18.1 Application. This test method shall apply to the toe section of protective footwear.

8.18.2 Samples.

8.18.2.1 Samples for conditioning shall be complete footwear toe sections including any removable insoles.

8.18.2.2 Samples shall be conditioned as specified in 8.1.3.

8.18.3 Specimens. A minimum of three footwear specimens shall be tested for both impact and compression.

8.18.4 Procedure. Footwear specimens shall be tested in accordance with ASTM F 2412, *Standard Test Methods for Foot Protection.*

8.18.5 Report.

8.18.5.1 The impact and compression forces for each specimen shall be recorded and reported.

8.18.5.2 The clearance after impact and the compression forces shall be recorded and reported.

8.18.6 Interpretation. One or more footwear specimens failing this test shall constitute failing performance.

8.19 Physical Penetration Resistance Test.

8.19.1 Application. This test method shall apply to protective helmets.

8.19.2 Samples. Samples for conditioning shall be complete helmets.

8.19.3 Specimens.

8.19.3.1 Three helmet specimens shall be tested for each condition as specified.

8.19.3.2 Specimens shall be conditioned for each environmental condition specified in 8.1.3, 8.1.4, 8.1.5, 8.1.6, and 8.1.7 prior to each physical penetration.

8.19.3.3 When testing helmets following the conditioning environments specified in 8.1.3, 8.1.4, and 8.1.7, and the helmet is returned to the conditioning environment before the time the helmet is out of that conditioning environment exceeds 4 minutes, the helmet shall be kept in the conditioning environment for a minimum of 3 minutes before resumption of testing with that helmet. When the time the helmet is out of the conditioning environment exceeds 4 minutes, before resumption of testing with that helmet, the helmet shall be returned to the conditioning environment for a minimum of 3 minutes for each minute, or portion of a minute, that the helmet remained out of the environment in excess of 4 minutes, or for a maximum of 24 hours, whichever is less.

8.19.4 Apparatus.

8.19.4.1 The ISO size J headform shall conform to the nominal dimensions in Figure 8.16.4.1(d). Above the test line, it shall have an electrically conductive surface that is electrically connected to the contact indicator.

8.19.4.2 The penetration striker shall have a mass of 1 kg, +0.02/–0.0 kg (2.2 lb, +0.01/–0.0 lb). The point of the striker shall be a cone with an included angle of 60 degrees, ±0.5 degree, a height of 38 mm (½ in.), and a tip radius of 0.5 mm, ±0.1 mm (0.020 in., ±0.004 in.). The hardness of the striking tip shall be Rockwell Scale C-60, minimum. The penetration striker shall be electrically connected to the contact indicator.

8.19.4.3 The contact indicator shall indicate when electrical contact has been made between the penetration striker and the conductive surface of the test headform. The contact indicator shall have a response time of less than 0.5 second.

8.19.4.4 The test shall be conducted at an ambient temperature of 20°C to 28°C (68°F to 82°F), and the relative humidity shall be 30 percent to 70 percent.

8.19.5 Procedure.

8.19.5.1 The environmentally conditioned helmet shall be placed on the rigidly mounted test headform and secured by the helmet retention system or by other means that will not interfere with the test. The helmet shall be positioned so that the penetration striker shall impact perpendicular to the helmet anywhere above the test line. The impact site shall be at least 75 mm (3 in.) from the center of a previous penetration or impact site.

8.19.5.2 The drop height of the penetration striker shall be adjusted so that the velocity at impact is at 7 m/sec, ±0.1 m/sec (23 ft/sec, ±0.5 ft/sec). A total of two penetration tests for

Copyright National Fire Protection Association
Provided by IHS under license with NFPA
No reproduction or networking permitted without license from IHS
Not for Resale

each of the five environmental conditions specified in 8.1.3, 8.1.4, 8.1.5, 8.1.6, and 8.1.7 shall be conducted in such a manner that at least one penetration test shall be performed in each of the test areas defined in Figure 8.1.6.1. The helmet shall be environmentally conditioned prior to each penetration test. A minimum of two penetration test blows shall be applied at different test areas on each helmet.

8.19.6 Report. The pass or fail result for each helmet shall be recorded and reported.

8.19.7 Interpretation. One or more helmet specimens failing this test shall constitute failing performance.

8.20 Puncture Resistance Test 1.

8.20.1 Application. This test method shall apply to protective gloves and footwear uppers.

8.20.2 Samples. Samples for conditioning shall be complete gloves, glove composite pouches, or footwear upper sections.

8.20.3 Specimens.

8.20.3.1 A minimum of three specimens measuring at least 150 mm (6 in.) square shall be tested.

8.20.3.2 Specimens shall be tested after conditioning as specified in 8.1.3.

8.20.4 Procedure. Specimens shall be tested in accordance with ASTM F 1342, *Standard Test Method for Protective Clothing Material Resistance to Puncture,* Test Method A.

8.20.5 Report.

8.20.5.1 The puncture force in N (lbf) shall be recorded and reported for each puncture on each specimen.

8.20.5.2 The average puncture force in N (lbf) shall be recorded and reported for all specimens tested.

8.20.6 Interpretation. The average puncture force shall be used to determine pass or fail performance.

8.20.7 Specific Requirements for Testing Gloves.

8.20.7.1 Specimens shall consist of each composite of the palm, palm side of the fingers, and back of the glove used in the actual glove construction with the layers arranged in proper order. Where the specimen composites of the palm, palm side of the fingers, and back of the glove are identical, only one representative composite shall be required to be tested.

8.20.7.2 Glove specimens shall also be tested after wet conditioning as specified in 8.1.8.

8.20.7.3 Testing shall be performed as specified in 8.20.2 through 8.20.6.

8.20.8 Specific Requirements for Testing Footwear Uppers.

8.20.8.1 Specimens shall consist of each composite of footwear item used in the actual footwear construction with the layers arranged in proper order. Specimens shall be taken from the thinnest portion of the footwear upper.

8.20.8.2 Testing shall be performed as specified in 8.20.2 through 8.20.6.

8.21 Puncture Resistance Test 2.

8.21.1 Application. This test method shall apply to protective footwear soles.

8.21.2 Samples. Samples for conditioning shall be footwear sole sections.

8.21.3 Specimens.

8.21.3.1 A minimum of three footwear soles shall be tested.

8.21.3.2 Specimens shall be conditioned as specified in 8.1.3.

8.21.4 Procedure. Puncture resistance tests shall be performed in accordance with ASTM F 2412, *Standard Test Methods for Foot Protection.*

8.21.5 Report. The puncture force in N (lbf) shall be recorded and reported for each puncture on each specimen.

8.21.6 Interpretation. One or more footwear specimens failing this test shall constitute failing performance.

8.22 Cut Resistance Test.

8.22.1 Application.

8.22.1.1 This test method shall apply to gloves, glove gauntlets, glove wristlets, and footwear upper materials.

8.22.1.2 This test method shall also apply to the CBRN barrier layer used in protective elements when the CBRN barrier layer is the external layer.

8.22.1.3 Modifications to this test method for evaluation of gloves shall be as specified in 8.22.7.

8.22.1.4 Modifications to this test method for evaluation of glove gauntlets shall be as specified in 8.22.9.

8.22.1.5 Modifications to this test method for evaluation of glove wristlets shall be as specified in 8.22.10.

8.22.1.6 Modifications to this test method for evaluation of footwear upper materials shall be as specified in 8.22.8.

8.22.1.7 Modifications to this test method for the evaluation of external CBRN barrier layers shall be as specified in 8.22.11.

8.22.2 Samples.

8.22.2.1 Glove, glove gauntlet, glove wristlet, and CBRN barrier material samples shall be conditioned as specified in 8.1.2.

8.22.2.2 Footwear upper material samples shall be conditioned as specified in 8.1.3.

8.22.3 Specimens. A minimum of three specimens, consisting of all layers, shall be tested.

8.22.4 Procedure. Specimens shall be evaluated in accordance with ASTM F 1790, *Standard Test Methods for Measuring Cut Resistance of Materials Used in Protective Clothing*, with the modification that specimens shall be tested to a specific load with the measurement of cut distance.

8.22.5 Report.

8.22.5.1 The distance of blade travel shall be recorded and reported to the nearest 1 mm (3⁄64 in.) for each sample specimen.

8.22.5.2 The average distance of blade travel in mm (in.) shall be recorded and reported for all specimens tested.

8.22.6 Interpretation. The average blade travel distance shall be used to determine pass or fail performance.

8.22.7 Specific Requirements for Testing Glove Body Materials.

8.22.7.1 Samples for conditioning shall be glove composite pouches as specified in 8.22.7.3.

Copyright National Fire Protection Association
Provided by IHS under license with NFPA
No reproduction or networking permitted without license from IHS
Not for Resale

8.22.7.2 Specimens shall be representative of the glove body composite construction at the palm of the hand and at the back of the hand and shall not include seams.

8.22.7.3 For glove body composites, specimens for conditioning shall be in the form of a 200 mm × 200 mm (8 in. × 8 in.) pouch.

8.22.7.3.1 The pouch shall be made of two glove body composite swatches.

8.22.7.3.2 The two composite swatches shall be 200 mm × 200 mm (8 in. × 8 in.) and shall be constructed to simulate the actual layers of the glove, arranged in proper order.

8.22.7.3.3 Each of the two composite swatches shall be stitched on all four sides using the same thread as used in the glove construction.

8.22.7.3.4 The two composite swatches shall then be sewn together, inner liner to inner liner, on three sides using the same thread as used in the glove construction.

8.22.7.4 After conditioning, the pouch and necessary stitching shall be cut to form 50 mm × 100 mm (2 in. × 4 in.) specimens for testing.

8.22.7.5 The swatch shall be permitted to be left stitched, restitched, or otherwise held together at the ends of the swatch for placement on the test apparatus. No stitching or binding mechanism shall be used in the test area.

8.22.7.6 Cut resistance testing shall be performed under a load of 400 g.

8.22.8 Specific Requirements for Testing Footwear Upper Materials.

8.22.8.1 Samples for conditioning shall be footwear uppers.

8.22.8.2 Specimens shall be representative of the thinnest part of the footwear upper composite(s).

8.22.8.3 Cut resistance testing shall be performed under a load of 800 g.

8.22.9 Specific Requirements for Testing Glove Gauntlets.

8.22.9.1 Samples for conditioning shall be glove gauntlet composite swatches as specified in 8.22.9.3.

8.22.9.2 Specimens shall be representative of the glove gauntlet composite construction.

8.22.9.3 For glove gauntlet composites, samples for conditioning shall include glove material that is a minimum of 200 mm (8 in.) square consisting of the composite used in the actual glove gauntlet construction with the layers arranged in proper order and stitched using the same thread used in the construction of the glove gauntlet.

8.22.9.4 After conditioning, the stitching shall be cut to form 50 mm × 100 mm (2 in. × 4 in.) specimens for testing.

8.22.9.5 Specimens shall not include seams where multiple layers are involved.

8.22.9.6 The swatch shall be permitted to be left stitched, restitched, or otherwise held together at the ends of the swatch for placement on the test apparatus.

8.22.9.7 No stitching or binding mechanism shall be used in the test area.

8.22.9.8 Cut resistance testing shall be performed under a load of 400 g.

8.22.10 Specific Requirements for Testing Glove Wristlets.

8.22.10.1 Samples for conditioning shall be glove wristlet composite swatches as specified in 8.22.10.3.

8.22.10.2 Specimens shall be representative of the glove wristlet composite construction.

8.22.10.3 For glove wristlet composites, samples for conditioning shall include wristlet material.

8.22.10.4 After conditioning, the material shall be cut to form 50 mm × 100 mm (2 in. × 4 in.) specimens for testing. Specimens shall not include seams where multiple layers are involved.

8.22.10.5 The swatch shall be permitted to stitched, or otherwise held together at the ends of the swatch for placement on the test apparatus.

8.22.10.6 No stitching or binding mechanism shall be used in the test area.

8.22.10.7 Cut resistance testing shall be performed under a load of 400 g.

8.22.11 Specific Requirements for Testing CBRN Barrier Layers.

8.22.11.1 Specimens shall consist of only the CBRN barrier layer material, as specified by the manufacturer.

8.22.11.2 Cut resistance testing shall be performed under a load of 200 g.

8.23 Faceshield/Goggle Component Lens Scratch Resistance Test.

8.23.1 Application. This test method shall apply to faceshield/goggle component lenses.

8.23.2 Samples.

8.23.2.1 Samples for conditioning shall be faceshield/goggle component lenses.

8.23.2.2 Samples shall be conditioned as specified in 8.1.3.

8.23.3 Specimens.

8.23.3.1 A minimum of four faceshield/goggle component lenses shall be selected.

8.23.3.2 Seven specimens shall be chosen from a minimum of four lenses. Four specimens shall be taken from the left viewing area and three specimens shall be taken from the right viewing area. One of the four specimens taken from the left viewing area shall be the setup sample.

8.23.3.3 The left viewing area test specimens shall include all of the following criteria:

(1) The specimen shall be a square measuring 50 mm × 50 mm (2 in. × 2 in.).
(2) Two edges of the square section shall be parallel within ±2 degrees of the axis of the cylinder or cone in the center of the specimen.

--`,,```,,,,````-`-`,,`,,`,`,,`---

Copyright National Fire Protection Association
Provided by IHS under license with NFPA
No reproduction or networking permitted without license from IHS
Not for Resale

(3) The specimen shall be taken from the left side of the faceshield/goggle component lens and shall, as a minimum, contain that portion of the lens that is directly in front of the pupil of the left eye as defined by positioning a complete faceshield/goggle component in accordance with the eye/face positioning index on an Alderson 50th percentile male headform.

8.23.3.4 The right viewing area test specimens shall include all of the following criteria:

(1) The specimen shall be a square measuring 50 mm × 50 mm (2 in. × 2 in.).
(2) Two edges of the square section shall be parallel within ±2 degrees of the axis of the cylinder or cone in the center of the specimen.
(3) The specimen shall be taken from the right side of the faceshield/goggle component lens and shall, as a minimum, contain that portion of the lens that is directly in front of the pupil of the right eye as defined by positioning a complete faceshield/goggle component in accordance with the eye/face positioning index on an Alderson 50th percentile male headform.

8.23.3.5 Each of the specimens shall be cleaned in the following manner:

(1) The specimen shall be rinsed with clean tap water.
(2) The specimen shall be washed with a solution of nonionic, low-phosphate detergent and water using a clean, soft gauze pad.
(3) The specimen shall be rinsed with clean tap water.
(4) The specimen shall be blown dry with filtered compressed air or nitrogen.

8.23.4 Apparatus.

8.23.4.1 The faceshield/goggle component lens scratch test apparatus shall be constructed in accordance with Figure 8.23.4.1.

8.23.4.2 The specimen holder shall be configured with a flat surface under the lens or with an inner radius support.

8.23.4.3 The pad holder shall consist of a cylinder 10 mm (⅜ in.) high and 25 mm (1 in.) in diameter with a radius of curvature equal to the radius of curvature of the outside of the lens in the viewing area ±0.25 diopter. This cylinder shall be rigidly affixed to the stroking arm by a No. 10-32 UNF threaded rod.

8.23.4.4 The pad shall be a Blue Streak M306M or equivalent wool felt polishing pad 30 mm (1³⁄₁₆ in.) in diameter.

8.23.4.5 The abrasive disc shall be made from 3M Part No. 7415, Wood Finishing Pad or equivalent. A disc 25 mm (1 in.) in diameter shall be cut from the abrasive sheet.

8.23.5 Procedure.

8.23.5.1 The haze of the specimen shall be measured using a haze meter in accordance with ASTM D 1003, *Standard Test Method for Haze and Luminous Transmittance of Transparent Plastics*, and shall be recorded as follows:

(1) The haze shall be measured in the center of the sample ±1.6 mm (±1⁄₁₆ in.).
(2) The specimen shall be repositioned to achieve the maximum haze value within the area specified in 8.23.5.1(1).
(3) The haze meter shall have a specified aperture of 22.3 mm (0.88 in.).
(4) The haze meter shall have a visual display showing 0.1 percent resolution.
(5) The haze meter shall be calibrated before and after each day's use following the procedures outlined in ASTM D 1003, *Standard Test Method for Haze and Luminous Transmittance of Transparent Plastics*.

8.23.5.2 The setup sample shall be placed cover side up in the test apparatus specimen holder.

8.23.5.3 The pad holder, pad, and abrasive disc shall be installed on the stroking arm. The stroking arm shall be leveled to ±3 degrees by adjusting the threaded pin. The pin shall be secured to prevent rotation of the pad holder. The axis of curvature of the pad holder shall be coincident with the axis of curvature of the lens.

8.23.5.4 The stroking arm shall be counterbalanced with the pad holder, pad, and abrasive disc in place.

8.23.5.5 The setup sample shall be replaced with one of the six specimens to be tested.

8.23.5.6 A test weight of 1 kg, ±8 g (2.2 lb, ±0.2 oz), shall be installed on the pin above the test specimen.

8.23.5.7 The test shall be run for 200 cycles, ±1 cycle. One cycle shall consist of a complete revolution of the eccentric wheel.

8.23.5.8 The length of stroke shall be 14 mm (17⁄32 in.), producing a pattern 38 mm (1½ in.) long. The frequency of the stroke shall be 60 cycles/min, ±1 cycle/min. The center of the stroke shall be within 1.6 mm (1⁄16 in.) of the center of the sample.

8.23.5.9 The specimen shall be removed and cleaned following the procedure specified in 8.23.3.6. The abrasive disc shall be discarded.

8.23.5.10 The testing steps specified in 8.23.5 shall be repeated five additional times with a new specimen and abrasive disc.

8.23.6 Report.

8.23.6.1 After each of the six specimens have been tested and cleaned, the haze of the specimen shall be measured following the procedure specified in 8.23.5.1, recorded, and reported.

8.23.6.2 The delta haze shall be calculated by subtracting the initial haze measurement from the final haze measurement.

8.23.7 Interpretation.

8.23.7.1 The six delta haze values shall be averaged.

8.23.7.2 The resultant value shall be compared to the value specified in 7.5.3 to determine pass or fail performance.

8.24 Abrasion Resistance Test.

8.24.1 Application. This test method shall apply to protective footwear soles with heels.

8.24.2 Samples.

8.24.2.1 Samples for conditioning shall be complete footwear soles with heels.

8.24.2.2 Samples shall be conditioned as specified in 8.1.3.

8.24.3 Specimens. A minimum of three specimens of the footwear soles with heels shall be tested.

8.24.4 Procedure. Abrasion resistance tests shall be performed in accordance with ASTM D 1630, *Standard Test Method for Rubber Property — Abrasion Resistance (Footwear Abrader)*.

Copyright National Fire Protection Association
Provided by IHS under license with NFPA
No reproduction or networking permitted without license from IHS
Not for Resale

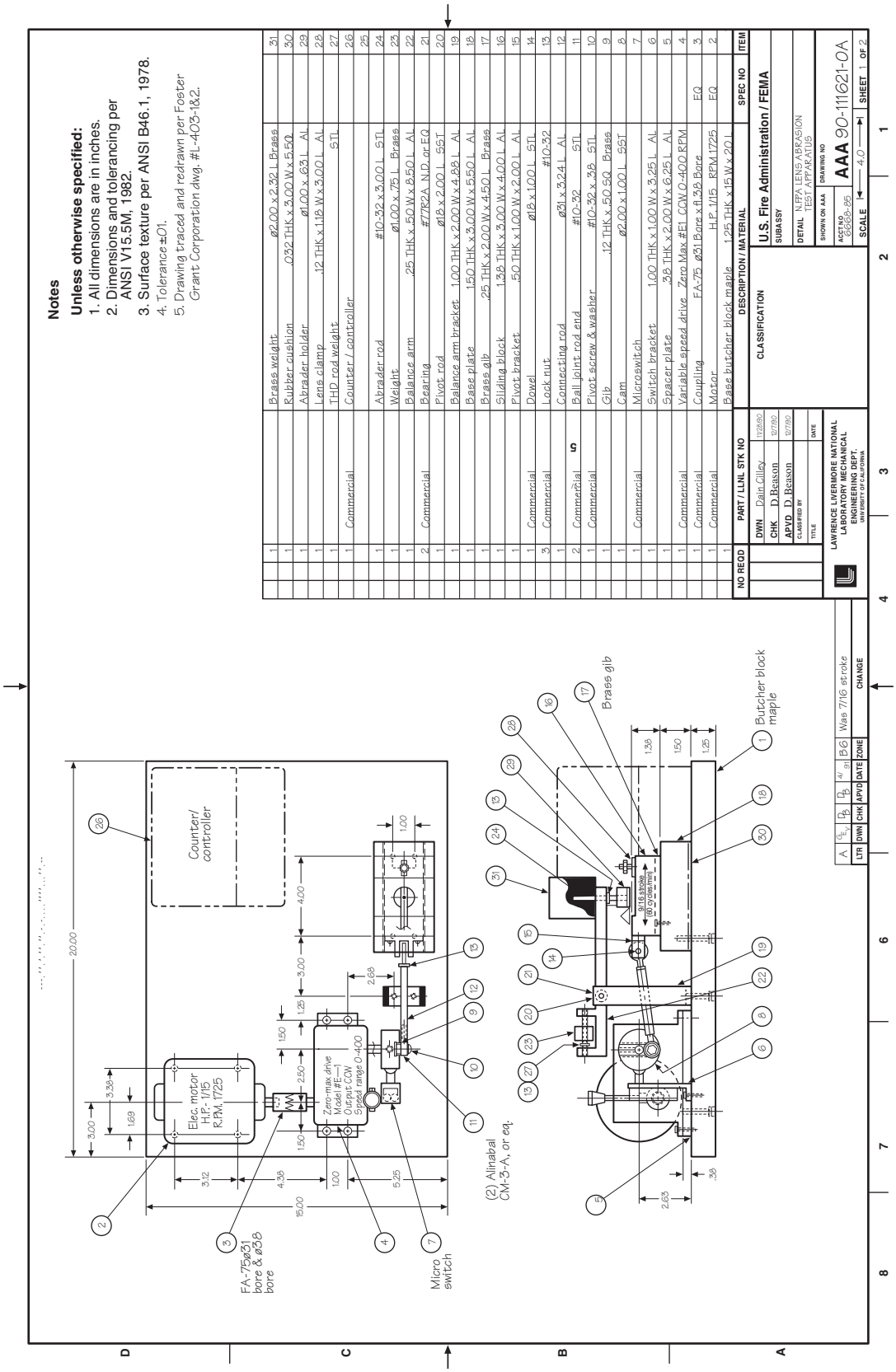

FIGURE 8.23.4.1 Faceshield/Goggle Component Lens Test Apparatus.

Copyright National Fire Protection Association
Provided by IHS under license with NFPA
No reproduction or networking permitted without license from IHS
Not for Resale

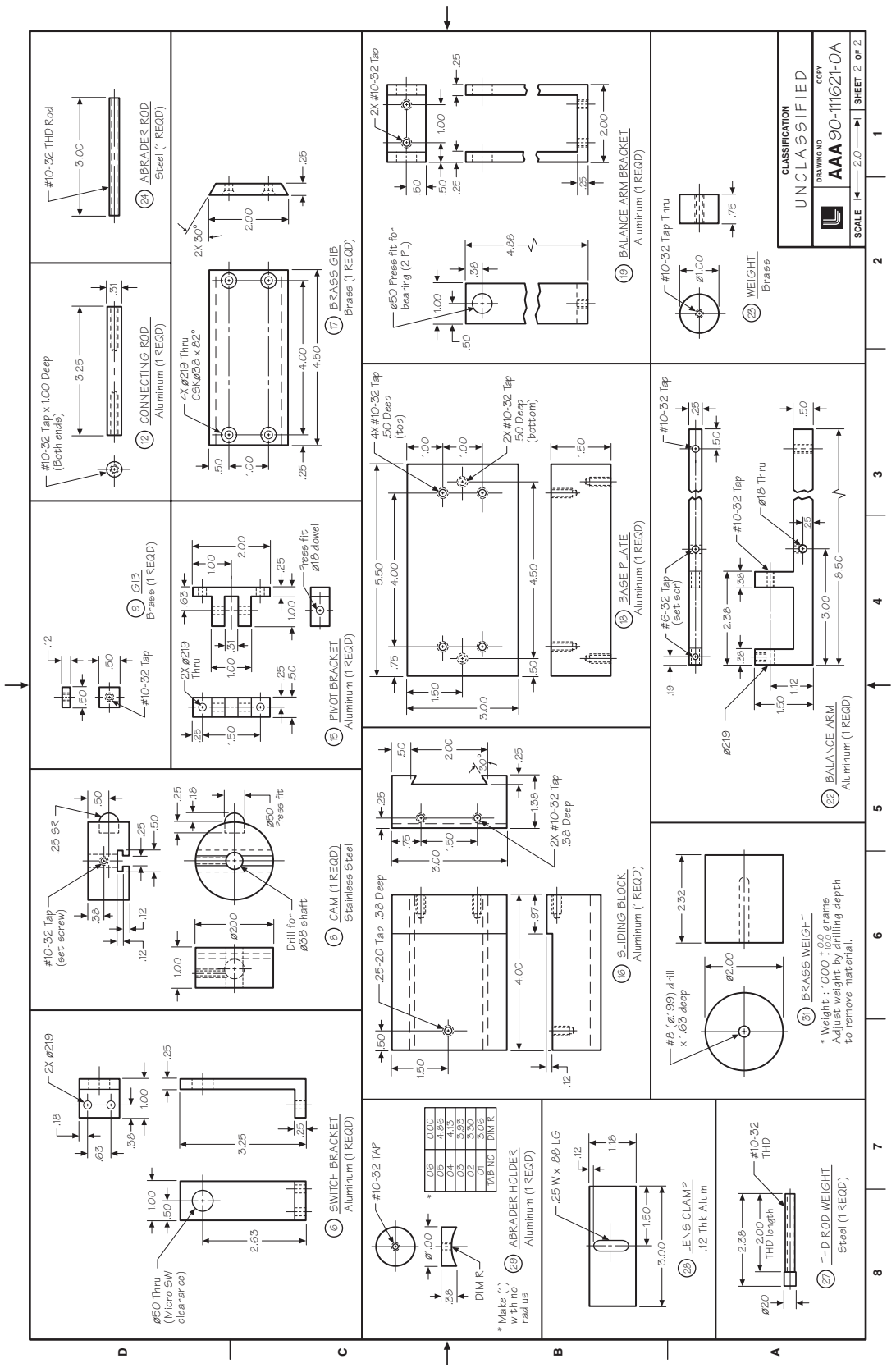

FIGURE 8.23.4.1 *Continued*

Copyright National Fire Protection Association
Provided by IHS under license with NFPA
No reproduction or networking permitted without license from IHS
Not for Resale

8.24.5 Report. The abrasion resistance rating of each specimen shall be recorded and reported.

8.24.6 Interpretation. One or more footwear specimens failing this test shall constitute failing performance.

8.25 Cleaning Shrinkage Resistance Test.

8.25.1 Application.

8.25.1.1 This test method shall apply to the protective garment outer shell, moisture barrier, thermal barrier, winter liner, wristlet, bootie material where present, and protective hoods.

8.25.1.2 Modifications to this test method for testing woven textile materials shall be as specified in 8.25.7.

8.25.1.3 Modifications to this test method for testing knit and stretch woven materials shall be as specified in 8.25.8.

8.25.1.4 Modifications to this test method for testing hoods shall be as specified in 8.25.9.

8.25.2 Samples. Samples shall be conditioned as specified in 8.1.3.

8.25.3 Specimens. Cleaning shrinkage resistance testing shall be conducted on three specimens of each material, and each separable layer of a composite material shall be tested separately.

8.25.4 Procedure.

8.25.4.1 Specimens shall be tested using five cycles of Machine Cycle 1, Wash Temperature V, and Drying Procedure Ai of AATCC 135, *Dimensional Changes in Automatic Home Laundering of Woven and Knit Fabrics.*

8.25.4.2 A 1.8 kg, ±0.1 kg (4.0 lb, ±0.2 lb), load shall be used. A laundry bag shall not be used.

8.25.4.3 Specimen marking and measurements shall be conducted in accordance with the procedure specified in AATCC 135, *Dimensional Changes in Automatic Home Laundering of Woven and Knit Fabrics.*

8.25.4.4 Knit specimens shall be pulled to original dimensions and shall be allowed to relax for 1 minute prior to measurement.

8.25.5 Report.

8.25.5.1 The percent change in the width and length dimensions of each specimen shall be calculated.

8.25.5.2 Results shall be recorded and reported as the average of all three specimens in each dimension.

8.25.6 Interpretation.

8.25.6.1 The average percent change in both dimensions shall be used to determine pass or fail performance.

8.25.6.2 Failure of either dimension shall constitute failure for the entire sample.

8.25.7 Specific Requirements for Testing Woven Textile Materials.

8.25.7.1 Each specimen shall be 380 mm × 380 mm, ±13 mm (15 in. × 15 in., ±½ in.), and shall be cut from the fabric to be utilized in the construction of the clothing item.

8.25.7.2 Samples for conditioning shall be at least 1 m (1 yd) square of each material.

8.25.7.3 Testing shall be performed as specified in 8.25.2 through 8.25.6.

8.25.8 Specific Requirements for Testing Knit and Stretch Woven Textile Materials.

8.25.8.1 Other than for wristlets, the dimensions of each specimen shall be 380 mm × 380 mm, ±13 mm (15 in. × 15 in., ±½ in.), and shall be cut from the fabric to be utilized in the construction of the clothing item.

8.25.8.2 The dimensions of wristlet specimens shall be 113 mm × 113 mm, ±13 mm (4½ in. × 4½ in., ±½ in.), and shall be cut from the wristlet fabric.

8.25.8.3 Samples for conditioning shall include material that is at least 50 mm (2 in.) larger in each of the two required specimen dimensions.

8.25.8.4 Testing shall be performed as specified in 8.25.2 through 8.25.6.

8.25.9 Specific Requirements for Testing Hoods.

8.25.9.1 Samples for conditioning shall include complete hoods with labels.

8.25.9.2 Specimens for testing shall be complete hoods with labels. A total of three specimens shall be tested.

8.25.9.3 Specimens shall be donned on a nonconductive test headform specified in Figure 8.6.12.3. The dimensions of the face opening shall be measured as specified in 8.47.4.2. Measurements shall also be made at the back and both sides of the hood from the top of the hood to the basic plane. The location of the basic plane on the hood shall be marked at each location.

8.25.9.4 Following their measurement and marking, specimens shall be laundered as specified in 8.25.4.1 and 8.25.4.2.

8.25.9.5 After washing, each specimen shall be donned on a nonconductive test headform specified in Figure 8.6.12.3. The dimensions of the face opening shall be measured as specified in 8.47.4.2. Measurements shall also be made from the top of the hood to the marks at the back and both sides of the hood.

8.25.9.6 The percentage change in the hood opening dimensions and the distances between the top of the hood and the marks along the basic plane shall be calculated and reported for each specimen. The average percentage change shall be calculated for each individual dimension for all specimens tested and used to determine pass or fail performance.

8.25.9.7 Failure in any one dimension constitutes failure of the entire sample.

8.26 Water Absorption Resistance Test.

8.26.1 Application. This test method shall apply to the protective garment outer shell and collar lining materials.

8.26.2 Samples. Samples for conditioning shall be at least 1 m (1 yd) square of each material.

8.26.3 Specimens.

8.26.3.1 Three specimens of outer shell material and collar lining material measuring at least 200 mm × 200 mm (8 in. × 8 in.) shall be tested separately for water absorption.

8.26.3.2 Specimens shall be tested after being subjected to the procedure specified in 8.1.2.

8.26.4 Apparatus. The test apparatus shall be as specified in AATCC 42, *Test Method for Water Resistance: Impact Penetration Test*, with the following modifications:

Copyright National Fire Protection Association
Provided by IHS under license with NFPA
No reproduction or networking permitted without license from IHS
Not for Resale

(1) A metal roller approximately 115 mm (4½ in.) long and weighing 1 kg (2½ lb) shall be used.
(2) Metal embroidery hoops, measuring 150 mm to 180 mm (6 in. to 7 in.) in diameter shall be used for mounting the specimen.

8.26.5 Procedure.

8.26.5.1 The conditioned specimen shall be securely mounted in the metal embroidery hoop with sufficient tension to ensure a uniformly smooth surface.

8.26.5.2 The direction of the flow of water down the specimen shall coincide with the warp wise direction of the specimen as placed on the stand.

8.26.5.3 The mounted specimen shall be placed on the block with the center of the specimen directly beneath the center of the nozzle and the plane of the surface of the specimen at a 45 degree angle with the horizontal.

8.26.5.4 A 500 ml volume of distilled water at a temperature of 27°C, ±1°C (80°F, ±2°F), shall be poured quickly into the funnel and allowed to spray onto the specimen. For collar lining materials, the exposure surface shall be the surface of the fabric that is next to the skin when the collar is closed in the raised position.

8.26.5.5 The following operations shall then be executed as rapidly as possible:

(1) The specimen shall be removed from the hoops and placed between sheets of blotting paper on a flat horizontal surface. The metal roller shall be rolled quickly forward and back one time over the paper without application of any pressure other than the weight of the roller.
(2) A square 100 mm × 100 mm (4 in. × 4 in.) shall be cut out of the center of the wet portion of the specimen and weighed to the nearest 0.05 g. This weight shall be designated as the "wet weight." Not more than 30 seconds shall elapse between the time the water has ceased flowing through the spray nozzle and the start of the weighing.
(3) The same 100 mm (4 in.) square shall be conditioned as specified in 6.1.3 until it has dried and reached moisture equilibrium with the surrounding standard atmosphere for textiles. Following this conditioning it shall be reweighed. This weight shall be designated as the "dry weight."

8.26.5.6 The percent water absorption (PWA) shall be calculated using the following equation:

$$\text{PWA} = \left[\left(\text{Wet Weight} - \text{Dry Weight}\right)\left(\text{Dry Weight}\right)\right] \times 100$$

8.26.6 Report.

8.26.6.1 The percent water absorbed for each specimen shall be recorded and reported.

8.26.6.2 The average percent water absorption shall be calculated, reported, and recorded.

8.26.7 Interpretation. The average percent water absorption shall be used for determining pass or fail performance.

8.27 Water Penetration Resistance Test.

8.27.1 Application. This test method shall apply to moisture barrier materials, the CBRN barrier layer in garments, and booties where present.

8.27.2 Samples.

8.27.2.1 Samples for conditioning shall be at least 1 m (1 yd) square.

8.27.2.2 Samples for the conditioning specified in 8.1.5 shall be 150 mm (6 in.) squares cut from sample subjected to the procedures specified in 8.1.2 and 8.1.3.

8.27.3 Specimens.

8.27.3.1 A minimum of five specimens of moisture barrier material shall be tested.

8.27.3.2 Specimens shall be tested both before and after being subjected to the procedure specified in 8.1.2.

8.27.3.3 Specimens to be tested shall be conditioned as specified in 8.1.3.

8.27.3.4 Specimens to be tested shall then be conditioned as specified in 8.1.5.

8.27.4 Procedure.

8.27.4.1 Specimens shall be tested at 172 kPa (25 psi) in accordance with Method 5512, *Water Resistance of Coated Cloth; High Range, Hydrostatic Pressure Method*, of Federal Test Method Standard 191A, *Textile Test Methods*.

8.27.4.2 The normal inner surface of the material shall be exposed to the water challenge as oriented in the clothing item.

8.27.4.3 There shall be no placement of a restraining cloth over the test specimen during the hydrostatic exposure.

8.27.5 Report. The pass or fail performance for each specimen shall be recorded and reported.

8.27.6 Interpretation.

8.27.6.1 The appearance of any water shall constitute failure.

8.27.6.2 One or more test failures of any specimen against any liquid shall constitute failure of the material.

8.28 Liquid Penetration Resistance Test.

8.28.1 Application.

8.28.1.1 This test method shall apply to garment moisture barrier materials and moisture barrier seams, shroud moisture barrier materials and moisture barrier seams, footwear moisture barrier materials and moisture barrier seams, bootie moisture barrier materials and moisture barrier seams where present, glove moisture barrier materials and moisture barrier seams, and the CBRN barrier layer in garments, gloves, and footwear.

8.28.1.2 Modifications to this test method for testing garment moisture barrier materials and moisture barrier seams, bootie moisture barrier materials and moisture barrier seams where present, and garment CBRN barrier layer and seams shall be as specified in 8.28.7.

8.28.1.3 Modifications to this test method for testing glove moisture barrier materials and moisture barrier seams shall be as specified in 8.28.8.

8.28.1.4 Modifications to this test method for testing footwear shall be as specified in 8.28.9.

8.28.2 Samples. Samples for conditioning shall be as specified in 8.28.7.1 for moisture barriers and moisture barrier seams, 8.28.8.2 for glove materials, and 8.28.9.1 for footwear materials.

Copyright National Fire Protection Association
Provided by IHS under license with NFPA
No reproduction or networking permitted without license from IHS
Not for Resale

8.28.3 Specimens.

8.28.3.1 A minimum of three specimens shall be tested for each material type.

8.28.3.2 Glove specimens shall be tested after being subjected to the procedure specified in 8.1.2.

8.28.3.3 Glove and footwear specimens to be tested shall be conditioned as specified in 8.1.3.

8.28.3.4 Glove and footwear specimens to be tested shall then be conditioned as specified in 8.1.5.

8.28.3.5 Moisture barrier materials and moisture barrier seam specimens shall be tested after being twice subjected to the following conditioning:

(1) Specimens shall first be subjected to the procedure specified in 8.1.2.
(2) Specimens shall then be conditioned as specified in 8.1.3.
(3) Specimens shall then be conditioned as specified in 8.1.5.
(4) Specimens shall then be conditioned at a temperature of 21°C, ±3°C (70°F, ±5°F), and at a relative humidity of 65 percent, ±5 percent, for at least 4 hours.

8.28.4 Procedure.

8.28.4.1 Liquid penetration resistance testing shall be conducted in accordance with ASTM F 903, *Standard Test Method for Resistance of Protective Clothing Materials to Penetration by Liquids*, using exposure Procedure C.

8.28.4.2 Each of the following liquids shall be tested separately against each test specimen:

(1) Aqueous film-forming foam (AFFF), 3 percent concentrate
(2) Battery acid (37 percent by weight sulfuric acid to water)
(3) Fire-resistant hydraulic fluid, phosphate ester base
(4) Surrogate gasoline fuel C as defined in ASTM D 471, *Standard Test Method for Rubber Property-Effect of Liquids*, a 50/50 percent by volume of toluene and iso-octane
(5) Swimming pool chlorinating chemical containing at least 65 percent-free chlorine (saturated solution)

8.28.4.3 The normal outer surface of the material shall be exposed to the liquid as oriented in the clothing item.

8.28.5 Report. The pass or fail performance for each specimen shall be recorded and reported.

8.28.6 Interpretation. One or more test failures of any specimen against any liquid shall constitute failure of the material.

8.28.7 Specific Requirements for Testing Moisture Barrier Materials and Moisture Barrier Seams.

8.28.7.1 Samples for conditioning shall be at least 380 mm (15 in.) square and shall consist of a composite constructed using a layer of 7.5 oz/yd^2 natural Nomex®, the moisture barrier, a layer of 3.8 oz/yd^2 ±0.3 oz/yd^2 aramid needle punched nonwoven, quilted to 3.4 oz/yd^2 ±0.2 oz/yd^2 aramic woven plain weave thermal barrier material, and another layer of 7.5 oz/yd^2 natural Nomex®. Where the sample includes the seam, the moisture barrier layer shall be constructed with a center seam that shall extend across the entire 380 mm (15 in.) width of the specimen. The four-layer composite shall be stitched around the entire periphery.

8.28.7.1.1 Where the layer intended to be the moisture barrier is configured of a composite that includes outer shell, moisture barrier, or thermal barrier combinations, the samples to be preconditioned shall be constructed using those materials.

8.28.7.2 The moisture barrier layer shall be removed from the four-layer composite samples after all preconditioning has been completed and shall become the moisture barrier specimen.

8.28.7.2.1 Where the moisture barrier is configured as indicated in 8.28.7.1.1, specimens shall be permitted to be a composite of layers provided that the layer intended to be the moisture barrier is visible in the test cell, and provided that the specimen was pre-conditioned according to 8.28.7.1.1.

8.28.7.3 Testing shall be performed as specified in 8.28.3 through 8.28.6.

8.28.8 Specific Requirements for Testing Glove Moisture Barrier Materials and Moisture Barrier Seams.

8.28.8.1 Specimens shall be representative of the glove moisture barrier and moisture barrier seams. Three specimens shall be tested.

8.28.8.2 Samples for conditioning shall be in the form of a 200 mm × 200 mm (8 in. × 8 in.) pouch and shall consist of a composite constructed to simulate a glove body composite using the following layers and construction:

(1) Layer 1: 3.0–3.5 oz/yd^2 cowsplit leather
(2) Layer 2: Glove moisture barrier
(3) Layer 3: 7–10 oz/yd^2 moadacrylic knit
(4) Layer 4: 7–10 oz/yd^2 moadacrylic knit
(5) Layer 5: Glove moisture barrier
(6) Layer 6: 3.0–3.5 oz/yd^2 cowsplit leather

8.28.8.2.1 Where the thermal liner and barrier are combined, the moadacrylic knits shall be permitted to be omitted from the composite. Where the moisture barrier material is continuous throughout the glove body, the moisture barrier layers shall contain a seam. The seam shall run within 25 mm (1 in.) of the center and shall extend across the entire width of the specimen. Layers 1, 2, and 3 shall be stitched together on all four sides. Layers 4, 5, and 6 shall also be stitched together on all four sides. The two resulting composite swatches shall then be stitched together, inner liner to inner liner, on three sides. All stitching shall be done with an inherently flame- and heat-resistant thread. All layers shall be positioned in proper orientation as would be the orientation of the layers in the actual glove.

8.28.8.3 The glove moisture barrier layers shall be removed from the multilayer composite samples after all preconditioning has been completed and shall become the glove barrier test specimen.

8.28.8.4 Specimens for testing shall be the barrier layer only.

8.28.8.5 Testing shall be performed as specified in 8.28.2 through 8.28.6.

8.28.8.6 Where the moisture barrier material is continuous through the glove body, only the barrier seams will be tested. The test cell shall include both the moisture barrier material and the moisture barrier seam. The seam shall be located in the approximate center of the test cell.

8.28.9 Specific Requirements for Testing Footwear Materials.

8.28.9.1 Samples for conditioning shall be whole footwear or footwear composite swatches. Footwear composite swatches shall be representative of the footwear construction.

8.28.9.2 Three specimens shall be representative of the moisture barrier, and three specimens shall be representative of each type of moisture barrier seam.

Copyright National Fire Protection Association
Provided by IHS under license with NFPA
No reproduction or networking permitted without license from IHS
Not for Resale

8.28.9.3 Testing shall be performed as described in 8.28.2 through 8.28.6.

8.28.9.4 Specimens for testing shall be the barrier layer only.

8.29 Viral Penetration Resistance Test.

8.29.1 Application.

8.29.1.1 This test method shall apply to garment moisture barrier materials and moisture barrier seams, shroud moisture barrier materials and moisture barrier seams, footwear moisture barrier materials and moisture barrier seams, bootie moisture barrier materials and moisture barrier seams where present, glove moisture barrier materials and moisture barrier seams, and the CBRN barrier layer in garments, gloves, and footwear.

8.29.1.2 Modifications to this test method for testing moisture barrier materials and moisture barrier seams, bootie moisture barrier materials and moisture barrier seams where present, and garment CBRN barrier layer and seams shall be as specified in 8.29.7.

8.29.1.3 Modifications to this test method for testing glove moisture barrier materials and moisture barrier seams shall be as specified in 8.29.8.

8.29.1.4 Modifications to this test method for testing footwear shall be as specified in 8.29.9.

8.29.2 Samples. Samples for conditioning shall be as specified in 8.29.7.1 for moisture barriers and moisture barrier seams, 8.29.8.2 for glove materials, and 8.29.9.2 for footwear materials.

8.29.3 Specimens.

8.29.3.1 A minimum of three specimens shall be tested for each material type.

8.29.3.2 Glove specimens shall be tested after being subjected to the procedure specified in 8.1.2.

8.29.3.3 Glove and footwear specimens to be tested shall be conditioned as specified in 8.1.3.

8.29.3.4 Glove and footwear specimens to be tested shall then be conditioned as specified in 8.1.5.

8.29.3.5 Moisture barrier material and moisture barrier seam specimens shall be tested after being twice subjected to the following conditioning:

(1) Specimens shall first be subjected to the procedure specified in 8.1.2.
(2) Specimens shall then be conditioned as specified in 8.1.3.
(3) Specimens shall then be conditioned as specified in 8.1.5.
(4) Specimens shall then be conditioned at a temperature of 21°C, ±3°C (70°F, ±5°F), and at a relative humidity of 65 percent, ±5 percent, for at least 4 hours.

8.29.4 Procedure. Viral penetration resistance testing shall be conducted in accordance with ASTM F 1671, *Standard Test Method for Resistance of Materials Used in Protective Clothing to Penetration by Blood-Borne Pathogens Using Phi-X-174 Bacteriophage as a Test System.*

8.29.4.1 The normal outer surface of the material shall be exposed to the viral challenge as oriented in the clothing item.

8.29.5 Report. The pass or fail performance for each specimen shall be recorded and reported.

8.29.6 Interpretation. A failure of any specimen against any virus constitutes failure of the material.

8.29.7 Specific Requirements for Testing Moisture Barrier Materials and Moisture Barrier Seams.

8.29.7.1 Samples for conditioning shall be at least 380 mm (15 in.) square and shall consist of a composite constructed using a layer of 7.5 oz/yd^2 natural Nomex®, the moisture barrier, a layer of 3.8 oz/yd^2, ±0.3 oz/yd^2, aramid needle punched nonwoven, quilted to 3.4 oz/yd^2 ±0.2 oz/yd^2, aramid woven plain weave thermal barrier material, and another layer of 7.5 oz/yd^2 natural Nomex®.

8.29.7.2 The moisture barrier layer shall be removed from the four-layer composite samples after all preconditioning has been completed and shall become the moisture barrier test specimen.

8.29.7.3 Testing shall be as specified in 8.29.3 through 8.29.6.

8.29.8 Specific Requirements for Testing Glove Materials Moisture Barrier Materials and Moisture Barrier Seams.

8.29.8.1 Specimens shall be representative of the glove moisture barrier and moisture barrier seams. Three specimens shall be tested.

8.29.8.2 Samples for conditioning shall be in the form of a 200 mm × 200 mm (8 in. × 8 in.) pouch and shall consist of a composite constructed to simulate a glove body composite using the following layers and construction:

(1) Layer 1: 3.0–3.5 oz/yard^2 cowsplit leather
(2) Layer 2: Glove moisture barrier
(3) Layer 3: 7–10 oz/yard^2 moadacrylic knit
(4) Layer 4: 7–10 oz/yard^2 moadacylic knit
(5) Layer 5: Glove moisture barrier
(6) Layer 6: 3.0–3.5 oz/yard^2 cowsplit leather

8.29.8.2.1 Where the thermal liner and barrier are combined, the moadcrylic knits shall be permitted to be omitted from the composite. Where the moisture barrier material is continuous throughout the glove body, the moisture barrier layers shall contain a seam. The seam shall run within 25 mm (1 in.) of the center and shall extend across the entire width of the specimen. Layers 1, 2, and 3 shall be stitched together on all four sides. Layers 4, 5, and 6 shall also be stitched together on all four sides. The two resulting composite swatches shall then be stitched together, inner liner to inner liner, on three sides. All stitching shall be done with an inherently flame- and heat-resistant thread. All layers shall be positioned in proper orientation as would be the orientation of the layers in the actual glove.

8.29.8.3 The glove moisture barrier layers shall be removed from the multilayer composite samples after all preconditioning has been completed and shall become the glove barrier test specimen.

8.29.8.4 Specimens for testing shall be the barrier layer only.

8.29.8.5 Testing shall be performed as specified in 8.29.2 through 8.29.6.

8.29.8.6 Where the moisture barrier material is continuous throughout the glove body, only the barrier seams will be tested. The test cell shall include both the moisture barrier material and the moisture barrier seam. The seam shall be located in the approximate center of the test cell.

Copyright National Fire Protection Association
Provided by IHS under license with NFPA
No reproduction or networking permitted without license from IHS
Not for Resale

8.29.9 Specific Requirements for Testing Footwear Materials.

8.29.9.1 Three specimens shall be representative of the moisture barrier, and three specimens shall be representative of each type of moisture barrier seam.

8.29.9.2 Samples for conditioning shall be whole footwear, or footwear composite swatches. Footwear composite swatches shall be representative of the footwear construction.

8.29.9.3 Testing shall be as described in 8.29.2 through 8.29.6.

8.29.9.4 Specimens for testing shall be the barrier layer only.

8.30 Corrosion Resistance Test.

8.30.1 Application.

8.30.1.1 This test method shall apply to hardware items on protective garments, helmets, gloves, and footwear.

8.30.1.2 Modifications to this test method for testing garment and glove hardware shall be as specified in 8.30.7.

8.30.1.3 Modifications to this test method for testing helmet and partial eye/face protective devices shall be as specified in 8.30.8.

8.30.1.4 Modifications to this test method for testing footwear shall be as specified in 8.30.9.

8.30.2 Samples. Samples shall be conditioned as specified in 8.1.3.

8.30.3 Specimens. A total of three specimens of each hardware type shall be tested.

8.30.4 Procedure.

8.30.4.1 Specimens shall be tested in accordance with ASTM B 117, *Standard Method of Salt Spray (Fog) Testing*. Hardware items shall be exposed to a 5 percent, ±1 percent, saline solution for a period of 20 hours.

8.30.4.2 Immediately following the storage specified in 8.30.4.1 and prior to examination, specimens shall be rinsed under warm, running tap water and dried with compressed air.

8.30.4.3 Specimens shall then be examined visually with the unaided eye to determine the presence of corrosion.

8.30.4.4 The functionality of each specimen shall be evaluated.

8.30.5 Report. The presence of corrosion and the functionality for each specimen shall be recorded and reported.

8.30.6 Interpretation. One or more hardware specimens failing this test shall constitute failing performance for the hardware type.

8.30.7 Specific Requirements for Testing Garment and Glove Hardware.

8.30.7.1 Samples for conditioning shall be whole hardware items.

8.30.7.2 A total of three specimens of each hardware type shall be tested.

8.30.8 Specific Requirements for Testing Helmets.

8.30.8.1 Samples for conditioning shall be whole helmets with the faceshield/goggle component attached.

8.30.8.2 A total of three different helmets shall be tested.

8.30.9 Specific Requirements for Testing Footwear.

8.30.9.1 Samples for conditioning shall be whole hardware items.

8.30.9.2 A total of three specimens of each hardware type shall be tested.

8.30.9.3 Functionality of the toe cap, sole plate, and ladder shank shall not be evaluated.

8.31 Electrical Insulation Test 1.

8.31.1 Application. This test method shall apply to protective helmets.

8.31.2 Samples.

8.31.2.1 Samples for conditioning shall be complete helmets.

8.31.2.2 Samples shall be conditioned as specified in 8.1.3.

8.31.3 Specimens. A minimum of three helmets shall be tested.

8.31.4 Apparatus.

8.31.4.1 The following equipment shall be provided for Procedure A:

(1) Source of 60 Hz alternating current variable from 0 to 2200 volts true rms
(2) Wiring and terminals for application of voltage to the water in the vessel
(3) Voltmeter to measure the applied voltage to within 2 percent
(4) Millimeter to measure the leakage current to within 2 percent
(5) Vessel, containing tap water, of sufficient size to submerge an inverted helmet to the dielectric test plane
(6) Frame for suspending the test specimen in water

8.31.4.2 The following equipment shall be provided for Procedure B:

(1) Source of 60 Hz alternating current variable from 0 to 2200 volts true rms
(2) Wiring and terminals for application of voltage across the crown of the test specimen
(3) Voltmeter to measure the applied voltage to within 2 percent
(4) Millimeter to measure the leakage current to within 2 percent
(5) Vessel, containing tap water, of sufficient size to completely submerge an inverted helmet
(6) Aluminum ISEA size 7 headform modified in accordance with Table 8.15.4.1 and Figure 8.15.4.1(a) through Figure 8.15.4.1(c)

8.31.5 Procedures.

8.31.5.1 Procedure A.

8.31.5.1.1 Where helmets specimens have a vertical adjustment to the suspension system, the vertical adjustment shall be set to raise the helmet to the highest position with maximum crown clearance between the headform and the inside of the helmet shell prior to establishing the helmet positioning index. The helmet specimen shall be placed on the ISO size J headform specified in Figure 8.16.4.1 and positioned according to the helmet positioning index.

8.31.5.1.2 After proper positioning in accordance with the helmet positioning index, the dielectric test plane specified in Figure 8.31.5.1.2 shall be marked on the shell of the helmet. The dielectric test plane shall be the plane that passes through

--`,,```,,,,````-`-`,,`,,`,`,,`---

Copyright National Fire Protection Association
Provided by IHS under license with NFPA
No reproduction or networking permitted without license from IHS
Not for Resale

the point located 85 mm (3 5/16 in.) above the basic plane, where the basic plane and the midsagittal plane intersect at the front of the headform and the point located 60 mm (2 5/16 in.) above the basic plane, where the basic plane and the midsagittal plane intersect at the rear of the headform.

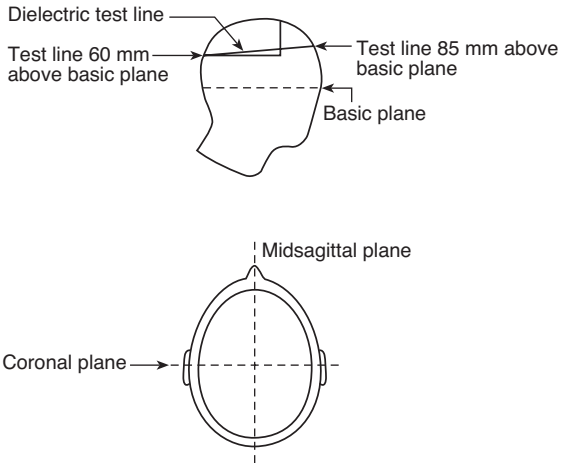

FIGURE 8.31.5.1.2 Test Setup.

8.31.5.1.3 The specimen shall be inverted and the inside of the specimen shall be filled with fresh tap water up to the dielectric test plane. The specimen shall then be submerged in the same type of water up to the same level as the water on the inside of the helmet. Care shall be taken to keep the unsubmerged portion of the test specimen dry so that flashover will not occur when voltage is applied.

8.31.5.1.4 A 60 Hz alternating current voltage shall be applied to the water in the vessel and increased to 2200 volts. The voltage shall be maintained at 2200 volts, ±2 percent, for 1 minute.

8.31.5.2 Procedure B.

8.31.5.2.1 The specimen and retention system shall be completely submerged in tap water for a period of 15 minutes, +2/−0 minutes. The specimen shall be removed from the tap water and allowed to drain for not longer than 2 minutes.

8.31.5.2.2 The specimen shall then be mounted on the modified ISEA aluminum size 7 headform, with the chinstrap firmly secured to the headform by means of the conductive terminal junction bolt.

8.31.5.2.3 A lead carrying 60 Hz alternating voltage shall be attached to all metal parts on the helmet's exterior, at or above the brim edge. A second pickup lead shall be attached to the terminal junction bolt. Voltage shall be applied to the external helmet shell lead and increased to 2200 volts, ±2 percent, volts. The voltage shall be maintained for 15 seconds.

8.31.6 Report. Any current leakage or evidence of breakdown shall be recorded and reported for each helmet.

8.31.7 Interpretation. One or more helmet specimens failing this test shall constitute failing performance.

8.32 Electrical Insulation Test 2.

8.32.1 Application. This test shall apply to protective footwear.

8.32.2 Samples.

8.32.2.1 Samples for conditioning shall be whole footwear.

8.32.2.2 Samples shall be conditioned as specified in 8.1.3.

8.32.3 Specimens. A minimum of three footwear elements shall be tested.

8.32.4 Procedure. Sample footwear shall be tested to 14,000 V (rms) in accordance with Section 9 of ASTM F 2412, *Standard Test Method for Foot Protection*. The electrode inside the boot shall be conductive metal shot.

8.32.5 Report. Any current leakage or evidence of breakdown shall be reported and recorded for each footwear item.

8.32.6 Interpretation. One or more footwear specimens failing this test shall constitute failing performance.

8.33 Overall Liquid Integrity Test 1.

8.33.1 Application. This test shall apply to protective gloves.

8.33.2 Samples.

8.33.2.1 Samples for conditioning shall be whole gloves.

8.33.2.2 A minimum of three glove pairs each for size small and large shall be used for testing.

8.33.3 Specimens.

8.33.3.1 Specimens shall be tested after being subjected to the procedures specified in 8.1.2 and then conditioned as specified in 8.1.3.

8.33.3.2 Specimens shall also be tested after being subjected to the procedures specified in 8.1.5 and then conditioned as specified in 8.1.3.

8.33.4 Apparatus.

8.33.4.1* A water markable glove shall cover all areas of the tester's hand. The water markable glove shall be constructed of a fabric that is marked easily by water to determine leakage.

8.33.4.2 Water used for integrity testing shall be treated with a nonfoaming surfactant to lower its surface tension to less than 35 dynes/cm, ±5 dynes/cm.

8.33.5 Procedure.

8.33.5.1 Test subjects shall be selected so that their hand dimensions are as close as possible to the middle of the range for hand length and hand circumference as specified in the tables provided for size small and size large gloves in 6.7.6.

8.33.5.2 The test subject shall don the glove specimen over the water markable glove.

8.33.5.3 The test subject shall immerse the glove specimen to within 25 mm (1 in.) of the top of the body of the glove specimen for 5 minutes in 20°C, ±3°C (68°F, ±5°F), water treated with a surfactant to lower its surface tension to 35 dynes/cm, ±5 dynes/cm. The test subject shall flex the glove specimen in a fist-clenching motion every 10 seconds.

8.33.5.4 The glove specimen shall be removed from the test subject's hand, and the inner glove shall be inspected for water marks.

8.33.6 Report. The appearance of any water mark on the inner glove after testing any of the three gloves shall be recorded and reported.

Copyright National Fire Protection Association
Provided by IHS under license with NFPA
No reproduction or networking permitted without license from IHS
Not for Resale

8.33.7 Interpretation. The appearance of any water mark on the inner glove after testing any glove shall be considered leakage and shall constitute failing performance.

8.34* Total Heat Loss Test.

8.34.1 Application. This test method shall apply to structural fire fighting protective garment element composites.

8.34.2 Samples. Samples shall be conditioned at a temperature of 25°C, ±7°C (77°F, ±13°F), and a relative humidity of 65 percent, ±5 percent, for at least 4 hours.

8.34.3 Specimens.

8.34.3.1 Total heat loss testing shall be conducted on at least three specimens.

8.34.3.2 Specimens shall consist of all layers in the structural fire fighting protective garment composite, arranged in the order and orientation as worn.

8.34.4 Apparatus. The test apparatus shall be as specified in ASTM F 1868, *Standard Test Method for Thermal and Evaporative Resistance of Clothing Materials Using a Sweating Hot Plate*.

8.34.5 Procedure. Testing shall be conducted in accordance with ASTM F 1868, *Standard Test Method for Thermal and Evaporative Resistance of Clothing Materials Using a Sweating Hot Plate*, using Part C.

8.34.6 Report.

8.34.6.1 The average intrinsic thermal resistance (R_{cf}) of the sample shall be recorded and reported.

8.34.6.2 The average apparent intrinsic evaporative resistance (AR_{cf}) of the sample shall be recorded and reported.

8.34.6.3 The average total heat loss (Q_t) of the sample shall be determined and reported.

8.34.7 Interpretation.

8.34.7.1 Pass or fail determination shall be based on the average reported total heat loss measurement of all specimens tested.

8.34.7.2 If an individual result from any test set varies more than ±10 percent from the average result, the results from the test set shall be discarded and another set of specimens shall be tested.

8.35 Retention System Test.

8.35.1 Application. This test shall apply to protective helmets.

8.35.2 Samples.

8.35.2.1 Samples for conditioning shall be whole helmets.

8.35.2.2 Samples shall be conditioned as specified in 8.1.3.

8.35.3 Specimens. A minimum of three complete helmets shall be tested.

8.35.4 Apparatus.

8.35.4.1 An ISO size J headform conforming to the nominal dimensions in Figure 8.16.4.1 shall be used.

8.35.4.2 A mechanical chin structure shall be designed for use with a calibrated tensile test machine. The mechanical chin structure shall consist of two rollers 13 mm (½ in.) in diameter with centers that are 75 mm (3 in.) apart. The mechanical chin structure shall conform to Figure 8.35.4.2(a), Figure 8.35.4.2(b), and Figure 8.35.4.2(c).

8.35.4.3 The calibrated tensile test machine shall be capable of measuring the force applied to the retention system within 2 percent at the specified forces.

8.35.5 Procedure.

8.35.5.1 The test shall be conducted at an ambient temperature of 20°C to 28°C (68°F to 82°F), and the relative humidity shall be 30 percent to 70 percent.

8.35.5.2 Prior to testing, the test machine shall be allowed to warm up until stability is achieved.

8.35.5.3 The headform and mechanical chin structure shall be positioned so that the vertical straight line distance between the bottom of the rollers and the crown of the headform is 210 mm, ±10 mm (8 5/16 in., ±3/8 in.), the chinstrap shall be passed around the rollers, and the helmet shall be secured to the headform. The chin strap shall be adjusted and preloaded to 45 N, ±5 N (10 lbf, ±1 lbf). The distance between the top of the helmet and the bottom of the rollers shall be measured and recorded to the nearest 0.5 mm (1/64 in.).

8.35.5.4 The force applied to the retention system shall be slowly increased to 445 N, ±5 N (100 lbf, ±1 lbf). The force shall be increased smoothly from 45 N to 445 N (10 lbf to 100 lbf) at a rate between 9 N/sec to 45 N/sec (2 lbf/sec to 10 lbf/sec).

8.35.5.5 Where using a tensile testing machine, the load rate shall be 25 mm/min (1 in./min) to a limit of 445 N (100 lbf).

8.35.5.6 The distance between the top of the helmet and the bottom of the rollers shall be measured and recorded again after the force has been maintained at 445 N (100 lbf) for 60 seconds, +150 seconds. The difference between the second measurement and the first shall be the retention system elongation.

8.35.6 Report. The retention system elongation shall be reported and recorded for each helmet specimen.

8.35.7 Interpretation. One or more helmet specimens failing this test shall constitute failing performance.

8.36 Suspension System Retention Test.

8.36.1 Application. This test shall apply to protective helmets.

8.36.2 Samples.

8.36.2.1 Samples for conditioning shall be whole helmets.

8.36.2.2 Samples shall be conditioned as specified in 8.1.3.

8.36.3 Specimens. A minimum of 3 complete helmets shall be tested.

8.36.4 Apparatus.

8.36.4.1 The suspension system retention test fixtures shall consist of rigid material of sufficient thickness to facilitate firm attachment of the inverted helmet to the tensile test machine as shown in Figure 8.36.4.1.

8.36.4.2 The calibrated tensile test machine shall be capable of measuring the force applied to the retention system within 2 percent at the specified forces.

8.36.5 Procedure.

8.36.5.1 Each helmet suspension strap shall be cut such that sufficient length of strap remains to be gripped by the movable jaw of the testing machine.

Copyright National Fire Protection Association
Provided by IHS under license with NFPA
No reproduction or networking permitted without license from IHS
Not for Resale

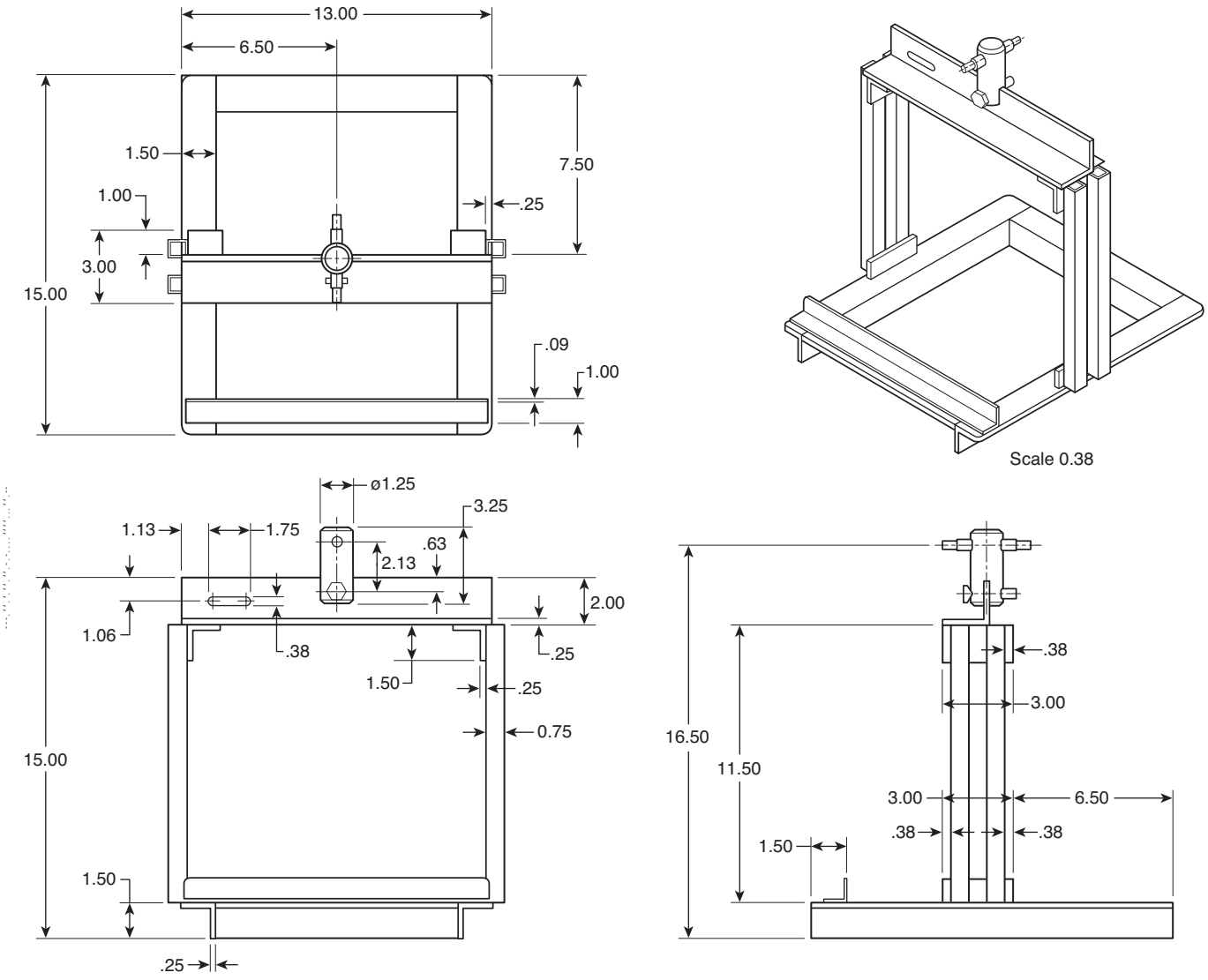

FIGURE 8.35.4.2(a) Retention Test Fixture.

8.36.5.2 Specimens shall be positioned and secured in the tensile testing machine so that the helmet's reference plane is horizontal.

8.36.5.3 Each attachment point of the crown strap shall be tested by applying a pull force along the centerline of the suspension strap, perpendicular to the reference plane to a maximum load of 45 N, ±5 N (10 lbf, ±1 lbf). The force shall be increased from 0 N to 45 N, ±5 N (0 lbf to 10 lbf, ±1 lbf), at a load rate of 25 mm/min, ±5 mm/min (1 in./min, ±3⁄16 in./min).

8.36.5.4 After application of the force is complete, the load shall be released and the suspension system shall be inspected for any separation from the helmet shell.

8.36.6 Report. The individual pass or fail results for each attachment point shall be reported and recorded.

8.36.7 Interpretation.

8.36.7.1 Separation of the helmet suspension from the helmet shall constitute failing performance.

8.36.7.2 One or more helmet specimens failing this test shall constitute failing performance.

8.37 Glove Donning Test.

8.37.1 Application. This test shall apply to protective gloves.

8.37.2 Samples.

8.37.2.1 A minimum of three glove pairs each for size small and size large shall be used for testing.

8.37.2.2 Samples for conditioning shall be whole gloves.

8.37.3 Specimens.

8.37.3.1 Specimens shall be conditioned as specified in 8.1.2 prior to testing.

8.37.3.2 Specimens shall be donned once after removal from the conditioning specified in 8.37.3.1 before beginning testing.

Copyright National Fire Protection Association
Provided by IHS under license with NFPA
No reproduction or networking permitted without license from IHS
Not for Resale

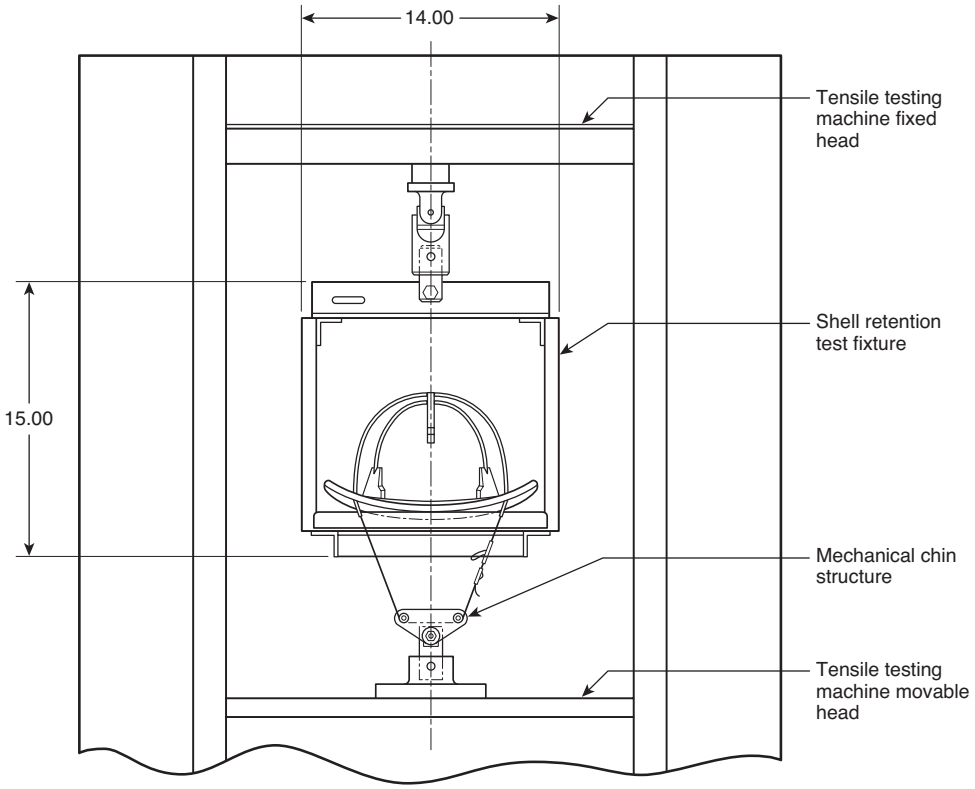

FIGURE 8.35.4.2(b) Retention Test Setup 1.

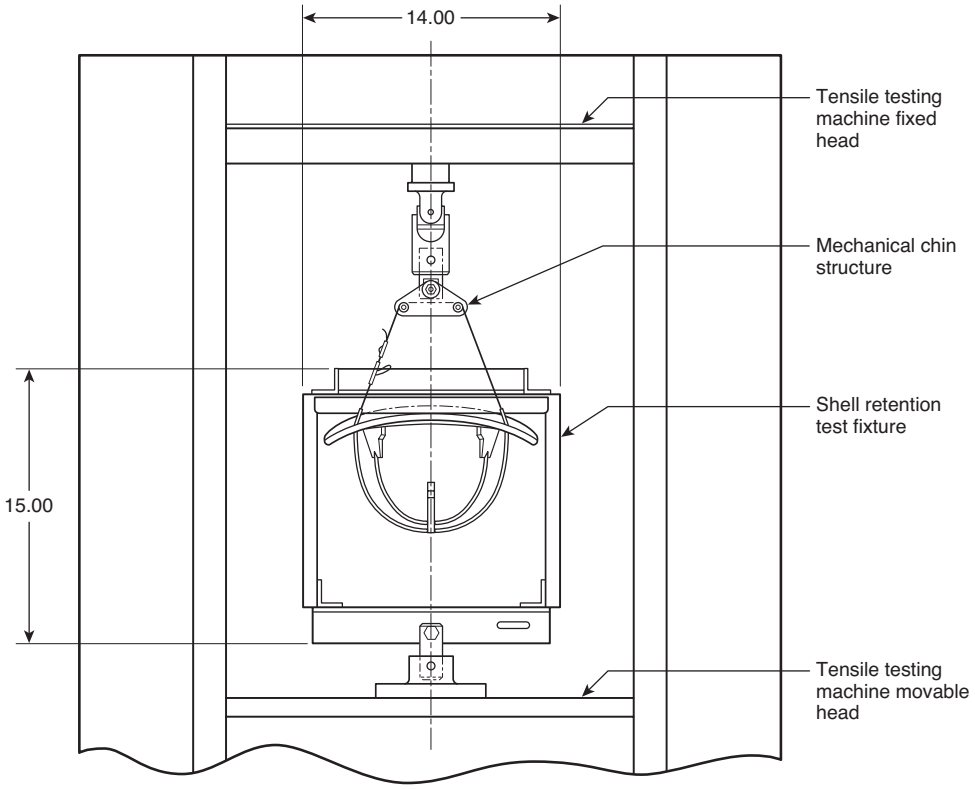

FIGURE 8.35.4.2(c) Retention Test Setup 2.

Copyright National Fire Protection Association
Provided by IHS under license with NFPA
No reproduction or networking permitted without license from IHS
Not for Resale

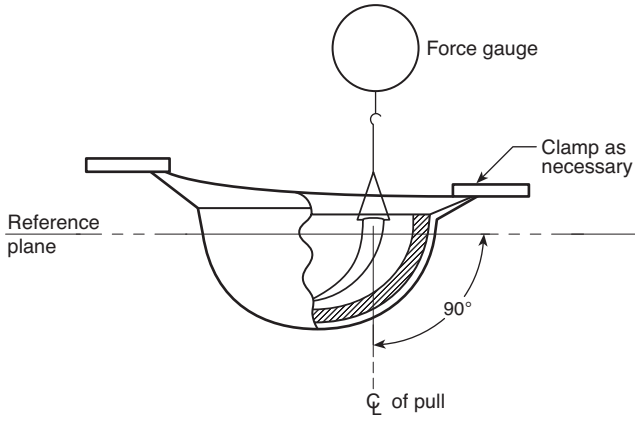

FIGURE 8.36.4.1 Suspension System Test Setup.

8.37.4 Procedure.

8.37.4.1 Test subjects shall be selected so that their hand dimensions are as close as possible to the middle of the range for hand length and hand circumference as specified in the tables provided for size small and size large gloves in 6.7.6.

8.37.4.2 Each donning trial shall start with the glove lying in front of the test subject and shall end when the test subject's fingers are seated in the specimen glove.

8.37.4.3 The time to don one glove of the pair specimen shall be determined by measuring the time it takes for the test subject to don the single glove on three consecutive trials without altering the specimen glove linings between donning. The glove shall be donned in accordance with the manufacturer's donning procedure. The glove shall then be removed by grasping the fingertip of the middle finger and pulling the hand out of the glove. The test subject shall be permitted to don either the right hand glove or left hand glove according to individual preference. Where the glove cannot be donned because of detachment of the inner liner or moisture barrier, then the trial for that glove shall be stopped. If any fingers cannot be fully inserted into the glove, then the trial for that glove shall be stopped.

8.37.4.4 The dry hand donning time shall be the average of the first three dry hand donning times as determined in 8.37.4.3.

8.37.4.5 The test subject shall repeat the trial specified in 8.37.4.3 for each pair of gloves.

8.37.4.6 The test hand shall then be completely submerged in room temperature water [21°C, ±3°C (70°F, ±5°F)] for 10 seconds.

8.37.4.7 Immediately after the hand wetting procedure specified in 8.37.4.6, with no time lapse, the test subject shall then don one glove of the pair specimen for three consecutive trials, for each specimen pair of gloves, as specified in 8.37.4.3 and 8.37.4.5. The times shall be recorded.

8.37.4.8 The wet hand donning time shall be the average of the first three wet hand donning times as determined in 8.37.4.7.

8.37.5 Report.

8.37.5.1 The dry hand donning time shall be recorded and reported to the nearest 0.1 second for each trial.

8.37.5.2 The wet hand donning time shall be recorded and reported to the nearest 0.1 second for each trial.

8.37.5.3 The average dry hand and wet hand donning times shall be calculated, recorded, and reported.

8.37.5.4 Any inner liner or moisture barrier separations shall be recorded and reported.

8.37.5.5 Any glove digits that do not allow full insertion shall be recorded and reported.

8.37.6 Interpretation.

8.37.6.1 Pass or fail determinations shall be made using the average dry hand and wet hand donning times.

8.37.6.2 Any detachment of the inner liner and/or moisture barrier shall constitute failing performance.

8.37.6.3 Any glove digits that do not allow full insertion shall constitute failing performance.

8.38 Glove Hand Function Test.

8.38.1 Application. This test shall apply to gloves.

8.38.2 Samples.

8.38.2.1 Samples for conditioning shall be whole glove pairs.

8.38.2.2 Glove pair samples shall be preconditioned as specified in 8.1.3.

8.38.3 Specimens.

8.38.3.1 A minimum of three glove pair specimens each for size small and size large shall be used for testing.

8.38.3.2 Each glove pair specimen shall be tested as a complete set of gloves in new, as distributed, condition.

8.38.3.3 Glove pair specimens shall not receive special softening treatments prior to tests.

8.38.4 Apparatus. The apparatus shall be as specified in ASTM F 2010, *Standard Test Method for Evaluation of Glove Effects on Wearer Hand Dexterity Using a Modified Pegboard Test.*

8.38.5 Procedures. The testing procedures shall be as specified in ASTM F 2010, *Standard Test Method for Evaluation of Glove Effects on Wearer Hand Dexterity Using a Modified Pegboard Test.*

8.38.6 Report.

8.38.6.1 The average percentage of bare-handed control shall be recorded and reported for each test subject.

8.38.6.2 The average percentage of bare-handed control for all test subjects shall be recorded and reported for each size.

8.38.7 Interpretation.

8.38.7.1 The average percentage of bare-handed control for size small and size large shall be used to determine pass or fail performance.

8.38.7.2 Failure of either size shall constitute failure of the test.

8.39 Grip Test.

8.39.1 Application. This test method shall apply to protective gloves.

8.39.2 Samples.

8.39.2.1 Samples for conditioning shall be whole gloves.

8.39.2.2 Sample glove pairs shall be preconditioned as specified in 8.1.2.

Copyright National Fire Protection Association
Provided by IHS under license with NFPA
No reproduction or networking permitted without license from IHS
Not for Resale

8.39.3 Specimens.

8.39.3.1 A minimum of three glove pair specimens each for size small and size large shall be used for testing.

8.39.3.2 Each specimen glove pair shall be tested as a complete set of gloves in new, as distributed, condition.

8.39.3.3 Specimen glove pairs shall be tested for each material and construction combination.

8.39.3.4 Specimen glove pairs shall be tested after being conditioned for wet conditions as specified in 8.1.8.

8.39.4 Apparatus. Grip testing shall be evaluated with the use of a 10 mm (⅜ in.) diameter, three-strand, prestretched polyester rope attached to a calibrated force measuring device.

8.39.5 Procedure.

8.39.5.1 Test subjects shall be selected so that their hand dimensions are as close as possible to the middle of the range for hand length and hand circumference as specified in the tables provided for size small and size large gloves in 6.7.6.

8.39.5.2 Each test subject shall make three successive attempts to exert as much horizontal pulling force as possible using the rope and force measuring device, using both hands, one in front of the other. Thumbs shall not overlap the fingers, and both feet shall be firmly planted on the ground. The average horizontal pulling force over the three attempts shall be the bare-handed control value.

8.39.5.3 Wet conditioned sample gloves shall be tested on a wet rope. Gloves shall be subjected to wet conditioning as specified in 8.1.8. The rope shall be subjected to wet conditioning by immersion in room temperature water [21°C, ±3°C (70°F, ±5°F)] for 2 minutes, followed by horizontal drip-drying for 5 minutes.

8.39.5.4 Each test subject shall test a minimum of three pairs of sample gloves using the method specified in 8.39.5.2. Test subjects shall attempt one trial with each pair of gloves. A trial shall consist of three successive attempts. The average horizontal pulling force over the three attempts shall be the pulling force with gloves. The average horizontal pulling force shall be calculated, recorded, and reported for each glove pair.

8.39.5.5 The average pulling force with gloves over the three trials for each size shall be calculated, recorded, and reported. The average pulling force with gloves shall be compared with the barehanded control value.

8.39.5.6 The percentage of bare-handed control value shall be calculated as follows:

$$\text{Percentage of bare-handed control value} = \frac{PF_g}{CV_b} \times 100$$

where:
PF_g = average pulling force with gloves
CV_b = bare-handed control value

8.39.6 Report. The percentage of bare-handed control value shall be recorded and reported for each specimen glove size.

8.39.7 Interpretation.

8.39.7.1 The percentage of bare-handed control value for size small and size large shall be used to determine pass or fail performance.

8.39.7.2 Failure of either size shall constitute failure of the test.

8.40 Ladder Shank Bend Resistance Test.

8.40.1 Application. This test shall apply to protective footwear.

8.40.2 Samples.

8.40.2.1 Samples for conditioning shall be whole footwear.

8.40.2.2 Ladder shanks or whole sole equivalents shall be conditioned as specified in 8.1.3.

8.40.3 Specimens. A minimum of three footwear ladder shank specimens, or whole sole equivalent specimens, shall be tested.

8.40.4 Apparatus. The apparatus shall consist of a tensile-testing machine, such as an Instron® or equivalent, that challenges a specimen with a simulated ladder rung. A 32 mm diameter × 50 mm long (1¼ in. diameter × 2 in. long) noncompressible probe shall be mounted on the movable arm. The specimen support assembly shall consist of two 50 mm × 25 mm × 25 mm (2 in. × 1 in. × 1 in.) noncompressible blocks placed 50 mm (2 in.) apart as shown in Figure 8.40.4.

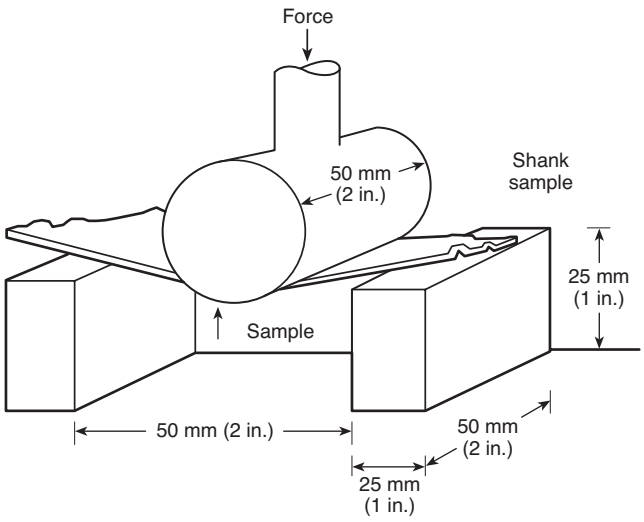

FIGURE 8.40.4 Shank Bend Test Setup.

8.40.5 Procedure. The specimen of the ladder shank or whole sole equivalent shall be placed on mounting blocks as it would be oriented toward the ladder, where the shank or whole sole equivalent is affixed into the protective footwear and subjected to force on its center with the test probe operated at 50 mm/min (2 in./min).

8.40.6 Report.

8.40.6.1 Deflection at 182 kg (400 lb) shall be recorded and reported to the nearest 1 mm (0.05 in.).

8.40.6.2 The average deflection shall be calculated, recorded, and reported to the nearest 1 mm (0.05 in.).

8.40.7 Interpretation. Pass or fail performance shall be determined using the average deflection for all specimens tested.

Copyright National Fire Protection Association
Provided by IHS under license with NFPA
No reproduction or networking permitted without license from IHS
Not for Resale

8.41 Slip Resistance Test.

8.41.1 Application. This test method shall apply to the footwear sole and heel section.

8.41.2 Samples.

8.41.2.1 Samples shall be the whole footwear items.

8.41.2.2 Samples shall be conditioned as specified in 8.1.3.

8.41.3 Specimens. A minimum of three complete footwear specimens shall be tested.

8.41.4 Procedure. Slip resistance shall be performed in accordance with ASTM F 489, *Standard Test Method for Static Coefficient of Friction of Shoe Sole and Heel Materials as Measured by the James Machine*, in a dry condition.

8.41.5 Report.

8.41.5.1 The static coefficient of friction of each specimen under dry conditions shall be recorded and reported.

8.41.5.2 The average static coefficient of friction of each specimen under dry conditions shall be calculated, recorded, and reported.

8.41.6 Interpretation. One or more footwear specimens failing this test shall constitute failing performance.

8.42 Label Durability and Legibility Test 1.

8.42.1 Application.

8.42.1.1 This test method shall apply to labels on protective garments, hoods, gloves, and boots.

8.42.1.2 Modifications to this test method for testing garment labels shall be as specified in 8.42.7.

8.42.1.3 Modifications to this test method for testing hood labels shall be as specified in 8.42.8.

8.42.1.4 Modifications to this test method for testing glove labels shall be as specified in 8.42.9.

8.42.1.5 Modifications to this test method for testing footwear labels shall be as specified in 8.42.10.

8.42.2 Samples. Samples shall be conditioned as specified in 8.1.3.

8.42.3 Specimens.

8.42.3.1 A minimum of three specimens of each type of label for each element shall be tested in each test.

8.42.3.2 Where labels have areas of "write-in" information, two additional specimens shall be tested that include those areas with sample information written in.

8.42.4 Procedures.

8.42.4.1 Laundering Durability Test.

8.42.4.1.1 Specimens shall be subjected to ten cycles of laundering and drying using Machine Cycle 1, Wash Temperature V, and Drying Procedure Ai of AATCC 135, *Dimensional Changes in Automatic Home Laundering of Woven and Knit Fabrics*.

8.42.4.1.2 A 1.8 kg, ±0.1 kg (4.0 lb, ±0.2 lb), load shall be used. A laundry bag shall not be used.

8.42.4.1.3 Specimens shall be examined for legibility to the unaided eye by a person with 20/20 vision, or vision corrected to 20/20, at a nominal distance of 305 mm (12 in.) in a well-illuminated area.

8.42.4.2 Abrasion Durability Test.

8.42.4.2.1 Specimens shall be subjected to abrasion in accordance with ASTM D 4966, *Standard Test Method for Abrasion Resistance of Textile Fabrics*, with the following modifications:

(1) The standard abrasive fabric and the felt-backing fabric shall be soaked for 24 hours or agitated in distilled water so that they are thoroughly wet.
(2) The standard abrasive fabric shall be rewetted after each set of cycles by applying 20 ml (0.68 oz) of distilled water from a squeeze bottle by squirting on the center of the abrasive composite pad.
(3) Specimens shall be subjected to 200 cycles, 3200 revolutions, of the test apparatus.

8.42.4.2.2 Specimens shall be examined for legibility to the unaided eye by a person with 20/20 vision, or vision corrected to 20/20, at a nominal distance of 305 mm (12 in.) in a well-illuminated area.

8.42.4.3 Heat Durability Test.

8.42.4.3.1 Specimens shall be subjected to convective heat as specified in 8.1.5.

8.42.4.3.2 Specimens shall be examined for legibility to the unaided eye by a person with 20/20 vision, or vision corrected to 20/20, at a nominal distance of 305 mm (12 in.) in a well-illuminated area.

8.42.5 Report. The legibility for each specimen shall be recorded and reported as acceptable or unacceptable.

8.42.6 Interpretation. One or more label specimens failing this test shall constitute failing performance.

8.42.7 Specific Requirements for Testing Garment Labels.

8.42.7.1 For testing label legibility after laundering, specimens shall include individual labels sewn onto a 1 m (1 yd) square of ballast material no closer than 51 mm (2 in.) apart in parallel strips. The ballast material shall be as specified in AATCC 135, *Dimensional Changes in Automatic Home Laundering of Woven and Knit Fabrics*.

8.42.7.2 For testing label legibility after abrasion, specimens shall be individual labels.

8.42.7.3 For testing label legibility after convective heat exposure, specimens shall include individual labels sewn onto a separate 380 mm, ±13 mm (15 in., ±½ in.), square of material that meets the outer shell requirements of this standard.

8.42.7.4 Sample conditioning shall be the same conditioning as specified for the respective tests.

8.42.7.5 Specimens shall be tested separately for legibility after laundering, abrasion, and heat durability tests as specified in 8.42.4.1, 8.42.4.2, and 8.42.4.3, respectively.

8.42.8 Specific Requirements for Testing Hood Labels.

8.42.8.1 For testing label legibility after laundering, specimens shall include complete hoods with labels attached.

8.42.8.2 For testing label legibility after abrasion, specimens shall be individual labels.

8.42.8.3 For testing label legibility after convective heat exposure, specimens shall include individual labels sewn onto a separate 380 mm, ±13 mm (15 in., ±½ in.), square of hood material that meets the hood material requirements of this standard.

--`,,```,,,,````-`-`,,`,,`,`,,`---
Copyright National Fire Protection Association
Provided by IHS under license with NFPA
No reproduction or networking permitted without license from IHS
Not for Resale

8.42.8.4 Sample conditioning shall be the same conditioning as specified for the respective tests.

8.42.8.5 Specimens shall be tested separately for legibility after laundering, abrasion, and heat durability tests as specified in 8.42.4.1, 8.42.4.2, and 8.42.4.3, respectively.

8.42.9 Specific Requirements for Testing Glove Labels.

8.42.9.1 For testing label legibility after laundering and convective heat exposure, specimens shall include complete gloves with labels attached.

8.42.9.2 For testing label legibility after abrasion, specimens shall be individual labels.

8.42.9.3 Sample conditioning shall be the same conditioning as specified for the respective tests.

8.42.9.4 Specimens shall be tested separately for legibility after laundering, abrasion, and heat durability tests as specified in 8.42.4.1, 8.42.4.2, and 8.42.4.3, respectively.

8.42.10 Specific Requirements for Testing Footwear Labels.

8.42.10.1 For testing label legibility after abrasion, specimens shall be individual labels.

8.42.10.2 Sample conditioning shall be the same conditioning as specified for the respective tests.

8.42.10.3 Specimens shall be tested separately for legibility after abrasion and heat durability tests as specified in 8.42.4.2 and 8.42.4.3, respectively.

8.43 Label Durability and Legibility Test 2.

8.43.1 Application. This test method shall apply to labels on helmets.

8.43.2 Samples.

8.43.2.1 Samples for conditioning shall be whole helmets with the labels attached.

8.43.2.2 Samples shall be conditioned as specified in 8.1.3, 8.1.4, 8.1.6, and 8.1.7.

8.43.3 Specimens. A minimum of three labels for each condition specified shall be tested.

8.43.4 Procedure. Label specimens shall be examined for legibility by a person with 20/20 vision, or vision corrected to 20/20, at a nominal distance of 305 mm (12 in.) in a well-illuminated area.

8.43.5 Report. The legibility for each label specimen shall be recorded and reported as acceptable or unacceptable.

8.43.6 Interpretation. One or more label specimens failing this test shall constitute failing performance.

8.44 Shell Retention Test.

8.44.1 Application. This test shall apply to protective helmets.

8.44.2 Samples.

8.44.2.1 Samples for conditioning shall be whole helmets.

8.44.2.2 Samples shall be conditioned as specified in 8.1.3.

8.44.3 Specimens. A minimum of three complete helmets shall be tested.

8.44.4 Apparatus.

8.44.4.1 The shell retention test fixtures shall consist of rigid material of sufficient thickness to facilitate firm attachment of the helmet shell while attached to the chinstrap tensile testing machine specified in 8.36.4.1.

8.44.4.2 The calibrated tensile test machine shall be capable of measuring the force applied to the retention system within 2 percent at the specified forces.

8.44.5 Procedure.

8.44.5.1 Specimens shall be positioned and secured in the tensile testing machine so that the helmet's reference plane is horizontal.

8.44.5.2 A pull force shall be applied to the helmet shell perpendicular to the reference plane. The force shall be applied to a maximum load of 356 N (80 lbf) within 30 seconds and shall be held at the maximum load for 1 minute, +5/–0 seconds.

8.44.6 Report.

8.44.6.1 Separation of the helmet shell from the helmet suspension system or the helmet retention system shall be recorded and reported.

8.44.6.2 The pass or fail result for each specimen shall be recorded and reported.

8.44.7 Interpretation. Any one specimen failing the test shall constitute failing performance for the item being tested.

8.45 Luminous (Visible) Transmittance Test.

8.45.1 Application. This test shall apply to faceshield/goggle component lenses.

8.45.2 Samples.

8.45.2.1 Samples for conditioning shall be complete faceshield/goggle components.

8.45.2.2 Samples shall be conditioned as specified in 8.1.3.

8.45.3 Specimens. A minimum of three faceshield/goggle component lenses shall be tested.

8.45.4 Apparatus. The standard source of radiant energy used in the measurement of luminous transmittance of filter lenses shall be a projection-type lamp No. T-8 or other high-powered, gas-filled, tungsten-filament incandescent lamp operated at the color temperature corresponding to Commission Internationale de l'Eclairage (CIE), Source A.

8.45.5* Procedure. Luminous transmittance shall be determined by one of the following means:

(1) By measuring the spectral transmittance and calculating the luminous transmittance through the use of published data on the spectral radiant energy of CIE Standard Illuminant A as specified in ISO/CIE 10526, *Calorimetric Illuminants*, and the relative luminous efficiency of the average eye
(2) By using a Gardner pivotal sphere haze meter and the standards of luminous transmittance maintained by the National Bureau of Standards

8.45.6 Report.

8.45.6.1 The percentage of light transmission shall be recorded and reported for each specimen.

8.45.6.2 The average light transmission of all specimens tested shall be calculated, recorded, and reported.

Copyright National Fire Protection Association
Provided by IHS under license with NFPA
No reproduction or networking permitted without license from IHS
Not for Resale

8.45.7 Interpretation. Pass or fail performance shall be based on the average light transmission measured.

8.46 Retroreflectivity and Fluorescence Test.

8.46.1 Application.

8.46.1.1 This test method shall apply to trim materials used on protective garments and helmets.

8.46.1.2 Trim materials shall be tested for each procedure specified in 8.46.4.

8.46.2 Samples.

8.46.2.1 Samples for conditioning shall include 305 mm (12 in.) long sections of trim.

8.46.2.2 Samples shall be conditioned as specified in 8.1.3.

8.46.3 Specimens.

8.46.3.1 A minimum of three trim test specimens shall be tested.

8.46.3.2 Each trim test specimen shall be 100 mm (4 in.) in length by the width of the finished trim product.

8.46.3.3 Where retroreflective and nonretroreflective surface areas are combined to form a trim, the specimen shall consist of the retroreflective and nonretroreflective portions of the finished trim product.

8.46.4 Procedures.

8.46.4.1 Measurement of Coefficient of Retroreflection.

8.46.4.1.1 The coefficient of retroreflection (R_a) shall be determined in accordance with ASTM E 809, *Standard Practice for Measuring Photometric Characteristics of Retroreflectors*, using the following modifications:

(1) Test distance shall equal 15.2 m (50 ft).
(2) Observation angle shall equal 0.2 degree.
(3) Entrance angle shall equal +5 degrees.
(4) Receiver shall be provided with an entrance aperture of 26 mm (1.024 in.), ±5 percent in diameter that is equivalent to 0.1 degree angular aperture.
(5) Exit aperture of the source shall be circular and 26 mm (1.024 in.), ±5 percent in diameter that corresponds to 0.1 degree angular aperture.
(6) Retroreflector reference angle shall equal 90 degrees.
(7) Datum mark shall be placed as specified by the trim manufacturer.

8.46.4.1.2 The coefficient of retroreflection (R_a) shall be calculated by the following equation:

$$R_a = \frac{R_I}{A_r}$$

where:
R_I = coefficient of luminous intensity measured as specified in 8.46.4.1.1
A_r = only the retroreflective surface area of the trim test specimen's surface area

8.46.4.1.2.1 A_r shall be calculated by subtracting the nonretroreflective surface area from the test specimen's total surface area.

8.46.4.2 Evaluation of Fluorescence.

8.46.4.2.1 Trim fluorescence shall be determined by its colorimetric properties. The color shall be measured in accordance with the procedures defined in ASTM E 991, *Standard Practice for Color Measurement of Fluorescent Specimens*, ASTM E 1164, *Standard Practice for Obtaining Spectrometric Data for Object Color Evaluation*, ASTM E 2152, *Standard Practice for Computing the Colors of Fluorescent Objects from Bispectral Photometric Data*, and ASTM E 2153, *Standard Practice for Obtaining Bispectral Photometric Data for Evaluation of Fluorescent Color* using the following test specifications:

(1) A polychromatic illumination of D65
(2) A 45 degree/0 degree (or 0 degree/45 degree) geometry
(3) A 2 degree standard observer
(4) A black underlay with a Cap Y, luminance factor, less than 4

8.46.4.2.2 The chromaticity shall be within one of the areas defined in Table 8.46.4.2.2, and the Cap Y, luminance factor, shall be not less than the corresponding minimum for the respective color.

Table 8.46.4.2.2 Color Requirements

Color	Chromaticity Coordinates		Minimum Luminance Factor (Cap Y)
Fluorescent yellow-green	0.387	0.610	70
	0.356	0.494	
	0.398	0.452	
	0.460	0.540	
Fluorescent orange-red	0.610	0.390	40
	0.535	0.375	
	0.570	0.340	
	0.655	0.344	
Fluorescent red	0.655	0.344	25
	0.570	0.340	
	0.595	0.315	
	0.690	0.310	

8.46.4.3 Rainfall Test.

8.46.4.3.1 Specimens of trim shall be tested for retroreflectivity when wet as specified in Annex A, "Method of Measuring Wet Retroreflective Performance," of EN 471, *Specification for High Visibility Warning Clothing*, at a rate of 110 mm/hr (4 5/16 in./hr).

8.46.4.3.2 The coefficient of retroreflectivity (R_a) shall be measured as specified in 8.46.4.1, 2 minutes, ±15 seconds, after the rainfall exposure has been started.

8.46.4.4 Convective Heat Exposure Test.

8.46.4.4.1 Specimens of trim shall be tested for retroreflectivity after convective heat exposure as specified in 8.1.5.

8.46.4.4.2 The coefficient of retroreflectivity (R_a) shall be measured as specified in 8.46.4.1.

8.46.4.4.3 The fluorescence shall be evaluated as specified in 8.46.4.2.

Copyright National Fire Protection Association
Provided by IHS under license with NFPA
No reproduction or networking permitted without license from IHS
Not for Resale

8.46.5 Report.

8.46.5.1 The coefficient of retroreflectivity (R_a) shall be recorded and reported for each specimen.

8.46.5.2 The average R_a of all specimens shall be calculated, recorded, and reported separately for each of the test procedures specified in 8.46.4.1, 8.46.4.3, and 8.46.4.4.

8.46.5.3 The number of fluorescent and nonfluorescent specimens shall be recorded and reported separately for each of the test procedures specified in 8.46.4.2 and 8.46.4.4.

8.46.6 Interpretation.

8.46.6.1 For trim retroreflectivity, pass or fail performance shall be determined using the average coefficient of retroreflection (R_a) reported for each group of specimens for each of the procedures specified in 8.46.4.1, 8.46.4.3, and 8.46.4.4.

8.46.6.2 For trim fluorescence, specimens that do not meet the chromaticity and luminance factor requirements shall be designated as nonfluorescent.

8.47 Hood Opening Size Retention Test.

8.47.1 Application.

8.47.1.1 This test shall apply to the face openings or SCBA facepiece interface openings of protective hoods.

8.47.1.2 Protective hoods with either elastic face openings or manually adjustable face openings shall be tested by the procedure specified in 8.47.4.

8.47.1.3 Protective hoods designed for interface with a SCBA facepiece(s) shall be tested by the procedure specified in 8.47.5.

8.47.2 Samples.

8.47.2.1 Samples for conditioning shall be whole hoods.

8.47.2.2 Samples shall be conditioned as specified in 8.1.3.

8.47.3 Specimens. A minimum of three whole hoods shall be tested.

8.47.4 Procedure for Elastic or Manually Adjustable Face Openings.

8.47.4.1 The hood shall be laid on a flat surface with the face opening facing up.

8.47.4.2 The hood face opening shall be measured at a minimum of eight separate locations around the entire perimeter of the face opening. The locations of measurement shall be marked on the hood.

8.47.4.3 The hood shall be positioned on the ISO size J headform specified in Figure 8.16.4.1 so that the hood is around the neck area of the headform with the neck and head area of the headform protruding through the face opening of the hood. The hood shall then be donned and doffed for 50 cycles, passing the hood face opening up and over the headform to cover the head, forehead, sides of face, chin, and neck each time and then passing the hood back down over the headform to the starting area around the neck. Hoods with manually adjustable face openings shall have the face opening adjusted during each cycle, once after donning and again before doffing.

8.47.4.4 Following the 50 cycles, the hood shall be removed from the headform, and the hood shall be allowed to relax for 1 minute.

8.47.4.5 The hood shall be laid on a flat surface with the face opening facing up.

8.47.4.6 The opening dimensions shall then be measured at the same locations marked around the entire perimeter of the face opening specified in 8.47.4.2.

8.47.4.7 The percent difference of the hood face opening dimensions before and after donning shall be determined.

8.47.5 Procedure for SCBA Facepiece Interface Openings.

8.47.5.1 The SCBA facepiece that the hood is designed to interface with shall be properly mounted, according to the SCBA manufacturer's instructions, on an ISO size J headform specified in Figure 8.16.4.1.

8.47.5.2 The hood shall then be donned on the headform, placing it over the SCBA facepiece.

8.47.5.3 The contact surface of the hood face opening with the SCBA facepiece shall be measured at a minimum of eight separate locations around the entire perimeter of the face opening contact area. The locations of measurement shall be marked on the hood.

8.47.5.4 With the SCBA facepiece in place, the hood shall then be positioned so that the hood is around the neck area of the headform with the neck and head area of the headform protruding through the face opening of the hood. The hood shall then be donned and doffed for 50 cycles, passing the hood face opening up and over the headform to cover the head and to contact the SCBA facepiece around the entire perimeter of the face opening contact area each time, and then passing the hood back down over the headform to the starting area around the neck. Where such hoods are designed to be manually adjustable around the hood face opening/SCBA facepiece interface area, the manual adjustment shall be made during each cycle, once after donning and again before doffing.

8.47.5.5 Following the 50 cycles, the hood shall be removed from the headform, and the hood shall be allowed to relax for 1 minute.

8.47.5.6 The hood shall then be donned on the headform, placing it over the SCBA facepiece.

8.47.5.7 The contact surface of the hood face opening with the SCBA facepiece shall be measured at the same locations marked around the entire perimeter of the face opening contact area specified in 8.47.5.3.

8.47.5.8 The percent difference of the hood face opening dimensions before and after donning shall be determined.

8.47.6 Report.

8.47.6.1 The percent difference of the hood face opening dimensions shall be recorded and reported for each specimen.

8.47.6.2 The average difference of the hood face opening dimensions shall be calculated, recorded, and reported.

8.47.7 Interpretation. Pass or fail performance shall be based on the average difference of the hood face opening dimensions.

8.48 Whole Garment and Ensemble Liquid Penetration Test.

8.48.1 Application.

8.48.1.1 This test method shall apply to protective garments, protective coats with interface device to integrate gloves, protective trousers with integrated booties, and entire ensembles

Copyright National Fire Protection Association
Provided by IHS under license with NFPA
No reproduction or networking permitted without license from IHS
Not for Resale

that are being evaluated for the optional CBRN terrorism agent protection.

8.48.1.2 Modifications to this test method for testing protective coats and protective coats with an interface device to integrate gloves shall be as specified in 8.48.8.

8.48.1.3 Modifications to this test method for testing protective trousers and protective trousers with integrated booties shall be as specified in 8.48.9.

8.48.1.4 Modifications to this test method for testing protective coat and trouser sets or protective coveralls shall be as specified in 8.48.10.

8.48.1.5 Modifications to this test method for testing proximity fire fighting ensemble garment elements shall be as specified in 8.48.12.

8.48.1.6 Modifications to this test method for testing entire ensembles for optional CBRN terrorism agent protection shall be as specified in 8.48.11.

8.48.2 Samples.

8.48.2.1 Samples shall be complete garments or ensemble elements.

8.48.2.2 Samples shall be conditioned as specified in 8.1.11.

8.48.3 Specimens.

8.48.3.1 A minimum of three specimens shall be tested. Specimens shall consist of individual coats, trousers, or coverall elements; sets of coats and trousers elements, or entire ensembles for CBRN terrorism agent protection. Each element shall have in place all layers that are required for the element to be compliant.

8.48.3.2 The size of the elements comprising the specimens shall be chosen to conform with the dimensions of the mannequin for proper fit of the specimen on the mannequin in accordance with the manufacturer's sizing system. The size of the elements comprising the specimen shall be the same size as the mannequin in terms of chest circumference, waist circumference, and inseam height.

8.48.3.3 Specimens to be tested shall be conditioned as specified in 8.1.11.

8.48.3.4 A minimum of three specimens shall be tested. Specimens shall consist of individual coats, trousers, coveralls, sets of coats and trousers, or overall ensembles as addressed in 8.48.11. Each element shall have in place all layers that are required for the element to be compliant.

8.48.3.5 The size of the elements comprising the specimens shall be chosen to conform with the dimensions of the mannequin for proper fit of the specimen on the mannequin in accordance with the manufacturer's sizing system. The size of the elements comprising the specimen shall be the same size as the mannequin in terms of chest circumference, waist circumference, and inseam height.

8.48.4 Sample Preparation.

8.48.4.1 Specimens to be tested shall be conditioned as specified in 8.1.11.

8.48.4.2 Samples to be conditioned shall be complete garments.

8.48.5 Apparatus. The apparatus and supplies for testing shall be those specified in ASTM F 1359, *Standard Practice for Evaluating the Liquid-Tight Integrity of Chemical Protective Clothing*, with the following modifications:

(1) The surface tension of the water used in testing shall be 35 dynes/cm, ±5 dynes/cm.
(2)*The mannequin used in testing shall be fully upright and shall have straight arms and legs with the arms positioned at the mannequin's side.

8.48.6 Procedure. Liquid penetration testing of garments shall be conducted in accordance with ASTM F 1359, *Standard Practice for Evaluating the Liquid-Tight Integrity of Chemical Protective Clothing*, with the following modifications:

(1) No provision for partial garments shall be permitted.
(2) Blocking of the specimen shall be as specified in 8.48.8, 8.48.9, and 8.48.10, as appropriate, for the type of specimen being tested.
(3) The method used for mounting of the mannequin in the spray chamber shall not interfere with the water spray.
(4) The normal outer surface of the material shall be exposed to the liquid as oriented in the clothing item.
(5) Fluorescent or visible dyes shall not be used in the water for spraying the suited mannequin.
(6) The suited mannequin shall be exposed to the liquid spray 5 minutes in each of the four mannequin orientations for a total of 20 minutes.
(7) At the end of the liquid spray exposure period, excess liquid shall be removed from the surface of the specimen.
(8) The specimen shall be inspected within 10 minutes of the end of the liquid spray exposure period for evidence of liquid penetration.

8.48.7* Report. A diagram shall be prepared for each test that identifies the locations of any liquid leakage as detected on the liquid-absorptive garment and the interior of the garment and the interior of the ensembles.

8.48.8 Interpretation. Any evidence of liquid on the liquid-absorptive garment, as determined by visual, tactile, or absorbent toweling, shall constitute failure of the specimen.

8.48.9 Specific Requirements for Testing Coats.

8.48.9.1 The liquid-absorptive garment shall only cover the upper torso and arms of the mannequin from the middle of the mannequin's neck, down to the mannequin's waistline, and down to the mannequin's wrist crease.

8.48.9.2 The coat shall be donned on the mannequin in accordance with the manufacturer's instructions for proper wearing.

8.48.9.3 The coat collar shall be placed in the up position on the mannequin with the collar closure system fastened in the closed position. The head of the mannequin shall be sealed off with a plastic bag. The plastic bag shall extend downward over the collar a distance of not greater than 25 mm (1 in.) and shall be taped down using duct tape or similar waterproof tape. The tape shall not extend downward more than 75 mm (3 in.) from the top of the collar. The bottom edge of the tape and the plastic bag shall not come closer than 25 mm (1 in.) of the collar seam where a collar seam is present. Where present, the collar neck seam shall not be covered.

8.48.9.4 The test shall be conducted with the mannequin's hands removed. The coat sleeve hem shall be taped smoothly to a can or an object of similar cylindrical, rigid shape of the same nominal diameter as the sleeve opening. The can or cylindrical object shall be fitted over the wristlet and under the

Copyright National Fire Protection Association
Provided by IHS under license with NFPA
No reproduction or networking permitted without license from IHS
Not for Resale

coat outer shell sleeve hem. The tape shall be duct tape or similar waterproof tape.

8.48.9.4.1 Where the coats have an interface device to integrate gloves as permitted in 6.7.2.5, the mannequin's hands shall not be removed and the interface device shall be mounted with gloves in accordance with the manufacturer's instructions for proper wearing.

8.48.9.5 The coat shall be tested in conjunction with the protective trousers specified by the manufacturer, even where the trousers are not being specifically evaluated by this test.

8.48.10 Specific Requirements for Testing Trousers.

8.48.10.1 The liquid-absorptive garment shall only cover the lower torso and legs of the mannequin from the mannequin's waistline down to the mannequin's ankles.

8.48.10.2 The trousers shall be donned on the mannequin in accordance with the manufacturer's instructions for proper wearing.

8.48.10.3 Trousers shall be tested in conjunction with the protective coat specified by the manufacturer, even where the coat is not being specifically evaluated by this test.

8.48.10.4 Absorbent toweling or similar material shall be placed underneath the mannequin in order to prevent water splashing up inside the trouser leg.

8.48.10.5 Where trousers are provided with integrated booties, outer footwear specified to be worn with the booties shall be donned on the mannequin in accordance with the manufacturer's instructions for proper wearing.

8.48.11 Specific Requirements for Testing Coveralls and for Testing Sets of Coats and Trousers.

8.48.11.1 The liquid-absorptive garment shall only cover the torso, arms, and legs of the mannequin from the middle of the mannequin's neck, down to the mannequin's wrist crease, and down to 200 mm (8 in.) above the bottom of the heel.

8.48.11.2 The coverall or set of coat and trousers shall be donned on the mannequin in accordance with the manufacturer's instructions for proper wearing.

8.48.11.3 The coat collar shall be placed in the up position on the mannequin with the collar closure system fastened in the closed position. The head of the mannequin shall be sealed off with a plastic bag. The plastic bag shall extend downward over the collar a distance of not greater than 25 mm (1 in.) and shall be taped down using duct tape or similar waterproof tape. The tape shall not extend downward more than 75 mm (3 in.) from the top of the collar. The collar neck seam shall not be covered.

8.48.11.4 The test shall be conducted with the mannequin's hands removed. The coat sleeve hem shall be taped smoothly to a can or an object of similar cylindrical, rigid shape of the same nominal diameter as the sleeve opening. The can or cylindrical object shall be fitted over the wristlet and under the coat outer shell sleeve hem. The tape shall be duct tape or similar waterproof tape.

8.48.11.4.1 Where the coats have an interface device to integrate gloves as permitted in 6.7.2.5, the mannequin's hands shall not be removed and the interface device shall be mounted with gloves in accordance with the manufacturer's instructions for proper wearing.

8.48.11.5 Absorbent toweling or similar material shall be placed underneath the mannequin in order to prevent water splashing up inside the trouser leg.

8.48.11.6 Where trousers are provided with integrated booties, outer footwear specified to be worn with the booties shall be donned on the mannequin in accordance with the manufacturer's instructions for proper wearing.

8.48.12 Specific Requirements for Testing Proximity Fire Fighting Ensemble Garment Elements.

8.48.12.1 Garment element specimens shall be complete proximity fire fighting protective coats, protective trousers, or protective coveralls.

8.48.12.2 Specimens shall be conditioned as specified in 8.1.3.

8.48.12.3 Where the proximity fire fighting garment design has passed the liquid penetration requirements specified for structural fire fighting garments and the only change to the proximity garment is from a structural garment outer shell to a proximity garment outer shell, at least one specimen shall be tested.

8.48.12.4 Where the proximity fire fighting garment design has not been tested for structural fire fighting garment liquid penetration requirements, then a minimum of three specimens shall be tested.

8.48.13 Specific Requirements for Testing Ensembles for CBRN Terrorism Agent Protection.

8.48.13.1 Specimens for testing shall consist of CBRN protective ensembles and the garment, helmet, glove, and footwear elements, and the SCBA specified for the ensemble by the ensemble manufacturer. The hood interface component shall also be tested where the hood is not part of the CBRN ensemble garment elements.

8.48.13.2 A total of three different ensemble specimens shall be evaluated.

8.48.13.3 Garment, glove, and hood elements shall be conditioned as specified in 8.1.11.

8.48.13.4 Where the ensemble garment element does not include booties and the CBRN barrier layer is incorporated into footwear, footwear shall be conditioned by flexing for 100,000 cycles in accordance with Appendix B of FIA 1209, *Whole Shoe Flex*.

8.48.13.5 The liquid-absorptive garment shall be a hooded coverall made of fabric meeting the requirements specified in ASTM F 1359, *Standard Practice for Evaluating the Liquid-Tight Integrity of Chemical Protective Clothing*. The liquid-absorptive garment shall not interfere with the correct wearing of the ensemble. In addition to the liquid-absorptive garment, the mannequin's hands shall be covered with suitably sized, 100 percent cotton gloves and the mannequin's feet covered with suitably sized, 100 percent cotton socks.

8.48.13.6 Specimens provided in 8.48.13.1 shall be donned on the mannequin in accordance with manufacturer's specifications.

8.48.13.7 The taping, blockage, coverage, or provision of absorbent toweling of or to any part of any interface or element on the ensemble shall not be permitted.

8.48.13.8 The mannequin with ensemble in place shall be exposed to the liquid spray 5 minutes in each of the four mannequin orientations for a total of 20 minutes.

Copyright National Fire Protection Association
Provided by IHS under license with NFPA
No reproduction or networking permitted without license from IHS
Not for Resale

8.48.13.9 Following the test, the liquid-absorptive garment, inner cotton gloves, and inner cotton socks worn on the mannequin shall be inspected to determine evidence of liquid leakage.

8.48.13.10 Other than the exposure duration specified in 8.48.13.4, testing shall be performed as specified in 8.48.3 through 8.48.6.

8.49 Eyelet and Stud Post Attachment Test.

8.49.1 Application. This test method shall apply to protective footwear eyelets and stud posts.

8.49.2 Samples.

8.49.2.1 Samples for conditioning shall be whole footwear.

8.49.2.2 The eyelet and stud post samples shall be conditioned as specified in 8.1.3.

8.49.3 Specimens.

8.49.3.1 Specimens shall total two eyelets and two stud posts on three separate footwear items.

8.49.3.2 Specimens shall be removed from the footwear and shall be 25 mm × 50 mm (1 in. × 2 in.).

8.49.4 Apparatus.

8.49.4.1 A tensile-testing machine shall be used with a traverse rate of 50 mm/min (2 in./min).

8.49.4.2 Clamps measuring 25 mm × 38 mm (1 in. × 1½ in.) shall have gripping surfaces that are parallel, flat, and capable of preventing slippage of the specimen during the test.

8.49.5 Procedure.

8.49.5.1 The stud post or eyelet puller shall be inserted or attached to the upper position of the tensile-testing machine.

8.49.5.2 The traverse rate shall be set at 50 mm/min (2 in./min).

8.49.5.3 The test eyelet or stud post shall be attached using the appropriate puller fixture.

8.49.5.4 The eyelet stay shall be clamped, but clamping the metal portion of the eyelets or stud hook in the lower clamps shall not be permitted.

8.49.5.5 The distance between the clamps and stud hooks or eyelets shall be 1.6 mm to 3.2 mm (1⁄16 in. to 1⁄8 in.).

8.49.5.6 The test shall then be started.

8.49.6 Report.

8.49.6.1 The force will reach a peak, decline slightly, and then increase to complete failure; however, the value at which the force first declines shall be recorded and reported as the initial failure point, since this is the separation point of the material around the eyelet or stud post.

8.49.6.2 The average force shall be calculated, recorded, and reported.

8.49.7 Interpretation. The average force shall be used to determine pass or fail.

8.50 Breaking Strength Test.

8.50.1 Application. This test shall apply to garment outer shell and collar lining materials used in protective garments.

8.50.2 Samples.

8.50.2.1 Samples for conditioning shall be 1 m (1 yd) square of material.

8.50.2.2 Samples shall be conditioned to the procedure specified in 8.1.2 at 10 cycles.

8.50.3 Specimens. Five specimens in each of the warp and filling directions shall be tested from each sample.

8.50.4 Procedure. Specimens shall be tested for breaking strength in accordance with ASTM D 5034, *Standard Method for Breaking Force and Elongation of Textile Fabrics (Grab Test).*

8.50.5 Report.

8.50.5.1 The breaking strength of each specimen shall be recorded and reported.

8.50.5.2 The average breaking strength shall be calculated, recorded, and for the warp and filling directions.

8.50.6 Interpretation.

8.50.6.1 Pass or fail performance shall be based on the average breaking strength in the warp and filling directions.

8.50.6.2 Failure in any one direction constitutes failure for the material.

8.51 Conductive and Compressive Heat Resistance (CCHR) Test.

8.51.1 Application. This test method shall apply to the shoulder areas and the knee areas of protective garments.

8.51.2 Samples.

8.51.2.1 Samples shall consist of composites representative of all layers of the shoulder areas and knee areas used in the actual construction of the protective garment. Different samples shall be made representing each different composite combination used by the garment manufacturer.

8.51.2.1.1 Samples of garment shoulder areas shall be representative of the area in the actual garment that measures at least 100 mm (4 in.) along the crown of the shoulder and extending down from the crown on both the front and back of the garment at least 50 mm (2 in.). The crown of the shoulder shall be the uppermost line of the shoulder when the garment is laying flat on an inspection surface with all closures fastened.

8.51.2.1.2 Samples of garment knee areas shall be representative of the knee area in the actual garment that measures at least 150 mm × 150 mm (6 in. × 6 in.).

8.51.2.2 Samples shall measure 200 mm × 200 mm (8 in. × 8 in.) and shall be prepared of the composite layers. The sample of the composite layers shall be sewn along two adjacent sides, with the layers arranged in the same order and orientation as intended to be worn.

8.51.2.3 All samples shall first be preconditioned as specified in 8.1.2.

8.51.3 Specimens.

8.51.3.1 A minimum of six specimens for testing shall be taken from the samples after the preconditioning specified in 8.51.2.3.

8.51.3.2 The specimens shall measure 150 mm × 150 mm (6 in. × 6 in.) and shall be cut from the sample excluding the

Copyright National Fire Protection Association
Provided by IHS under license with NFPA
No reproduction or networking permitted without license from IHS
Not for Resale

sewn areas so that the composite layers comprising the specimen are not sewn together at any point.

8.51.3.3 Specimens for both wet condition testing and dry condition testing shall then be conditioned as specified in 8.1.3.

8.51.3.4 For wet condition testing only, the innermost layer of the composite specimen shall then be further conditioned as follows prior to testing:

(1) Blotter paper measuring 225 mm × 225 mm (9 in. × 9 in.) and conforming to the requirements in AATCC 35, *Water Resistance: Rain Test,* shall be saturated in distilled water.
(2) Two sheets of the saturated blotter paper shall be run together through a wringer that meets the requirements of 10.2 of AATCC 70, *Test Method for Water Repellency: Tumble Jar Dynamic Absorption Test.*
(3) The innermost layer of the composite specimen shall be placed between the two sheets of blotting paper.
(4) The innermost layer of the composite specimen, between the two sheets of blotting paper, shall be placed into a 4 L (1 gal) size airtight and liquidtight bag, and the bag shall be sealed closed.
(5) The innermost layer of the composite specimen, between the two sheets of blotting paper, shall be conditioned in the airtight and liquidtight bag at room temperature for at least 24 hours, and shall not be removed from conditioning more than 5 minutes prior to testing.
(6) After removal from conditioning, the innermost layer shall be removed from the blotting paper, and the composite specimen shall be resembled with all layers arranged in the same order and orientation as intended to be worn.

8.51.4 Procedure.

8.51.4.1 A minimum of six specimens, three for wet condition testing and three for dry condition testing, shall be tested for shoulder areas. A minimum of six specimens, three for wet condition testing and three for dry condition testing, shall be tested for knee areas.

8.51.4.2 Specimens shall be tested in accordance with ASTM F 1060, *Standard Test Method for Thermal Protective Performance of Materials for Protective Clothing for Hot Surface Contact*, with the modifications specified herein.

8.51.4.3 Specimens shall be tested using an exposure temperature of 280°C, +3/–0°C (536°F, +5/–0°F).

8.51.4.4 For the shoulder area CCHR rating, the sensor assembly shall be modified so that the pressure applied to the test specimens shall be 140 g/cm^2, ±14 g/cm^2 (2 psi, ±0.2 psi).

8.51.4.5 For the knee area CCHR rating, the sensor assembly shall be modified so that the pressure applied to the test specimens shall be 562 g/cm^2, ±5.6 g/cm^2 (8 psi, ±0.08 psi).

8.51.4.6 The CCHR rating for each specimen in each test shall be the time in seconds to achieve a temperature rise of 24°C (43°F).

8.51.4.7 For purposes of calculating the time to a 24°C (43°F) temperature rise, the room temperature in the testing area shall be determined immediately prior to starting the test, and that temperature shall be used as the base temperature in determining the 24°C (43°F) rise. The time shall be measured to the nearest tenth of a second. Time "zero" shall be the time that the sensor and specimen are placed in direct contact with the exposure surface.

8.51.5 Report.

8.51.5.1 The individual CCHR rating for each specimen in each test shall be recorded and reported.

8.51.5.2 The average CCHR rating for the shoulder area wet condition test specimens shall be separately calculated, recorded, and reported. The average CCHR rating for the shoulder area dry condition test specimens shall be separately calculated, recorded, and reported.

8.51.5.3 The average CCHR rating for the knee area wet condition test specimens shall be separately calculated, recorded, and reported. The average CCHR rating for the knee area dry condition test specimens shall be separately calculated, recorded, and reported.

8.51.6 Interpretation.

8.51.6.1 Pass or fail determination for shoulder area wet condition test specimens shall be based on the average reported CCHR rating of all wet specimens. Pass or fail determination for shoulder area dry condition test specimens shall be based on the average reported CCHR rating of all dry specimens tested. Failure of either the wet condition test set or the dry condition test set to achieve an average CCHR of at least 25 shall constitute failing performance.

8.51.6.2 Pass or fail determination for knee area wet condition test specimens shall be based on the average reported CCHR rating of all wet specimens. Pass or fail determination for knee area dry condition test specimens shall be based on the average reported CCHR rating of all dry specimens tested.

8.51.6.3 If an individual CCHR rating from any individual specimen varies more than ±8 percent from the average results for that test set, the results for that test set shall be discarded and another set of specimens shall be tested.

8.52 Radiant Protective Performance Test.

8.52.1 Application.

8.52.1.1 This test method shall apply to garment outer shell materials, glove outer shell materials, helmet faceshields, footwear, helmet outer covers, and helmet shrouds.

8.52.1.2 Modifications to this test method for testing garment outer shell and glove outer shell materials shall be as specified in 8.52.7.

8.52.1.3 Modifications to this test method for testing footwear shall be as specified in 8.52.8.

8.52.2 Samples. Samples for conditioning shall be garment and glove outer shell material, helmet faceshields, whole footwear, helmet outer covers, and helmet shrouds.

8.52.3 Specimens.

8.52.3.1 Five specimens of each sample shall be preconditioned in accordance with 8.1.3 prior to testing.

8.52.3.2 Test specimens shall be 75 mm × 250 mm (3 in. × 10 in.).

8.52.3.3 All specimens excluding helmet faceshields shall be conditioned by means of abrading the sample before removing it from the conditioned atmosphere. Specimens shall be tested for radiant heat not more than 5 minutes after removal from conditioning.

Copyright National Fire Protection Association
Provided by IHS under license with NFPA
No reproduction or networking permitted without license from IHS
Not for Resale

8.52.3.4 All specimens shall be conditioned on an oscillating drum abrasion apparatus as specified in ASTM D 4157, *Standard Test Method for Abrasion Resistance of Textile Fabric (Oscillatory Cylinder Method)*. The specimens shall be mounted on the oscillating drum of the apparatus. The abradant shall be No. 6 hard-textured cotton duck conforming to the construction, weight, and strength of Type I of Federal Specification CCC-C-419, *Cloth, Duck, Unbleached, Plied-Yarns, Army and Numbered*, and shall be cut into strips 45 mm (1⅞ in.) wide by 230 mm (9 in.) long with the long dimension in the warp or wale direction. The abradant shall be mounted in the specimen holding clamps under a tension of 13.5 N (3 lbf) and a head load of 1.36 kg (3 lb). A new abradant shall be used for each test, and the contact area of the abradant shall be free of slubs, knots, or other weave imperfections. The test specimens shall be subjected to 300 abrasion cycles.

8.52.4 Procedure.

8.52.4.1 Specimens shall be tested in accordance with ASTM F 1939, *Standard Test Method for Radiant Protective Performance*.

8.52.4.2 The selected test exposure shall be 2 cal/cm^2 as provided for in the test method.

8.52.5 Report.

8.52.5.1 Five specimens shall be run, and the radiant reflective value shall be determined.

8.52.5.2 The average radiant reflective value of the five specimens shall be calculated, recorded, and reported.

8.52.6 Interpretation. The average radiant reflective value of all specimens of an item shall be used to determine pass or fail performance.

8.52.7 Modifications for Testing Garment Outer Shell and Glove Outer Shell Materials.

8.52.7.1 The garment and glove outer shell material test specimens shall be 75 mm × 250 mm (3 in. × 10 in.) with the long dimension in the warp or wale direction.

8.52.7.2 Specimens shall be tested as specified in 8.52.2 through 8.52.7.

8.52.8 Modifications for Testing Footwear.

8.52.8.1 Footwear specimens shall be five 75 mm × 250 mm (3 in. × 10 in.) pieces cut from the thinnest portions of the footwear upper or from a composite that is representative of footwear upper construction at the thinnest part, including booties where provided.

8.52.8.2 Specimens shall be tested as specified in 8.52.2 through 8.52.7.

8.53 Radiant Heat Resistance Test 3.

8.53.1 Application. This test shall apply to helmet shell systems.

8.53.2 Samples.

8.53.2.1 One sample helmet shell shall be used.

8.53.2.2 The sample helmet shall have any reflective outer covering in place as intended for use, but shall have all shock absorbing and thermally insulating materials removed from the interior.

8.53.3 Specimens. Specimens shall be conditioned as specified in 8.1.3.2.

8.53.4 Apparatus.

8.53.4.1 The test apparatus shall be the radiant exposure chamber as specified in 8.1.6.

8.53.4.2 The sensor shall be an exposed bead Type J or K30 AWG thermocouple that will be connected to a recording device that is capable of reading degrees centigrade.

8.53.5 Calibration Procedure. The chamber shall be calibrated according to the calibration procedure specified in 8.1.6 to obtain a stable uniform irradiance of 1.0, ±0.1 W/cm^2.

8.53.6 Procedure.

8.53.6.1 One specimen helmet shell, with any reflective outer covering in place as intended for use but with all shock absorbing and/or thermally insulating materials removed from the interior, shall be used.

8.53.6.2 An exposed bead Type J or K30 AWG thermocouple shall be fastened to the inner surface of the specimen helmet shell in such a way that the thermocouple bead is in contact with the shell material. The thermocouple bead shall be permitted to be placed at any location within a 100 mm (4 in.) diameter of where the front rear axis of the center line of the shell and the intersection of the bitragion coronal meet. There shall be no internal or external projections greater than 2 mm (1/16 in.) in height on the shell within 25 mm (1 in.) of the thermocouple bead in any direction. The thermocouple shall be connected to a recording device that reads degrees centigrade.

8.53.6.3 The specimen helmet with thermocouple shall be placed in the radiant exposure chamber specified in 8.1.6. With the radiant panel adjusted to provide a stable uniform irradiance of 1.0 W/cm^2, ±0.1 W/cm^2 in accordance with 8.1.6, the sample shall be placed in the chamber so that the thermocouple location is in the center of the area of radiant exposure.

8.53.6.4 The specimen shall be exposed to an irradiance of 1.0 W/cm^2, ±0.1 W/cm^2, for 180 seconds.

8.53.6.5 Thermocouple temperatures shall be recorded at the beginning and at the end of the 180 seconds.

8.53.7 Report. The difference of the initial temperature and the temperature at 180 seconds shall be recorded and reported.

8.53.8 Interpretation. Any rise in temperature greater than 25°C (78°F) shall constitute failure of this test.

8.54 Wet Flex Test.

8.54.1 Application. This test method shall apply to garment outer shell materials, glove outer shell materials, helmet faceshields, footwear, helmet outer covers, and helmet shrouds.

8.54.2 Samples. Samples shall be conditioned as specified in 8.1.3.

8.54.3 Specimens. Specimens shall be 100 mm × 200 mm (4 in. × 8 in.) with the long dimension parallel to the warp or wale direction and shall be from the fabric lot used in the construction of the proximity protective garment.

8.54.3.1 Five (5) specimens from each sample unit shall be tested with no two specimens containing the same yarns.

8.54.3.2 The specimens shall be immersed in water at 60°C, ±3°C (140°F, ±5°F), for 15 minutes.

8.54.3.3 Upon removal from the water, the test specimen shall be placed on two layers of absorbent-type blotters and covered by two additional layers.

Copyright National Fire Protection Association
Provided by IHS under license with NFPA
No reproduction or networking permitted without license from IHS
Not for Resale

8.54.3.4 The blotting paper shall conform to the requirements in AATCC 35, *Water Resistance: Rain Test.*

8.54.3.5 After placing the wet specimens between the blotters, a 4.5 kg (10 lb) weight, a steel rod 75 mm (3 in.) in diameter and 125 mm (5 in.) long, shall be rolled over the test specimen for four complete cycles, eight passes.

8.54.3.6 The specimen shall be removed from between the blotters and placed in the flexing device as specified in 8.54.3.4.

8.54.4 Apparatus.

8.54.4.1 The flexing device as shown in Figure 8.54.4.1(a) and Figure 8.54.4.1(b) shall be used.

8.54.4.2 The flexing device shall have a suitable weight on the weight arm to produce a 13.5 N to 15.75 N (3 lb to 3.5 lb) tension on the specimen during flexing.

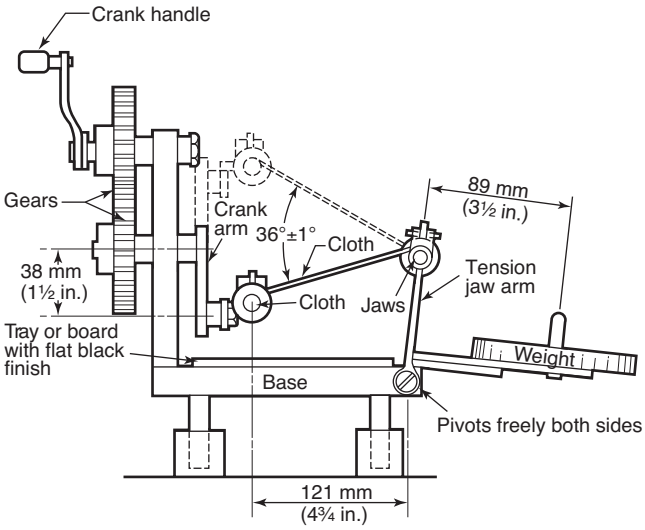

FIGURE 8.54.4.1(a) End View of Flexing Device.

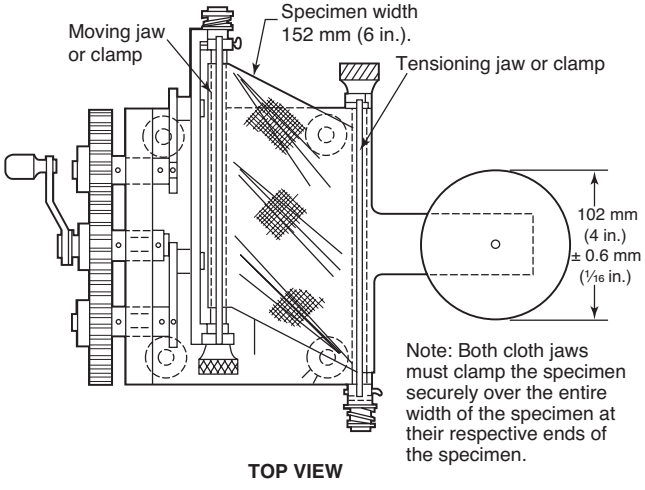

FIGURE 8.54.4.1(b) Top View of Flexing Device.

8.54.4.3 The tensioning jaw or clamp shall be so located that, with the tension jaw arm vertical, any point on the tensioning jaw would be the apex of a cone of motion generated between that point and the corresponding point of the moving jaw.

8.54.4.4 The crank arms shall be equal in effective length and in angular phase so that the moving jaw connecting the two arms remains parallel to the tension jaw throughout a complete revolution of the arms.

8.54.4.5 A tray or board, flat black in color and sufficiently large to catch any particles that are removed from the fabric, shall be cleaned before each test and examined for material particles after each test.

8.54.4.6 A motor-driven apparatus shall be permitted to be used in lieu of the manual device specified.

8.54.5 Procedure.

8.54.5.1 The specimens shall be taken directly from the blotter paper and placed in the flexing device with the warp or wale direction perpendicular to the jaw line.

8.54.5.2 The distance between jaw lines shall be 135 mm (5¼ in.).

8.54.5.3 The specimen shall be placed in the device with the moving jaw at bottom dead center, the tension jaw arm vertical, and the face of the cloth down.

8.54.5.4 Each jaw shall clamp the specimen across the entire width.

8.54.5.5 The crank handle shall be turned at a rate of 50 revolutions, ±10 revolutions, per minute of the crank arms and moving jaw during the test.

8.54.5.6 The specimen shall be flexed for 1000 cycles, then removed from the apparatus, and shall be visually inspected to determine pass/fail.

8.54.6 Report. Evidence of any cracking or delamination shall be identified and defined and shall be recorded and reported.

8.54.7 Interpretation.

8.54.7.1 Any cracking or delamination closer than 22 mm (⅞ in.) from either jaw line shall not be considered.

8.54.7.2 Failure of any one specimen shall constitute failure of sample unit.

8.55 Adhesion After Wet Flex–Tape Method Test.

8.55.1 Application.

8.55.1.1 This test method shall apply to the following proximity fire fighting protective ensemble elements: garment outer shell materials, glove outer shell materials, helmet outer covers, and helmet shrouds.

8.55.1.2 This test shall apply only to coated or laminated materials of the noted element components.

8.55.2 Samples. The same samples used in Section 8.54, Wet Flex Test, shall be the samples used for this test.

8.55.3 Specimens. The same specimens specified in 8.54.3 shall be the specimens used for this test.

8.55.4 Apparatus.

8.55.4.1 The tensile-testing machine described in ASTM D 5034, *Standard Test Method for Breaking Strength and Elongation*

Copyright National Fire Protection Association
Provided by IHS under license with NFPA
No reproduction or networking permitted without license from IHS
Not for Resale

of Textile Fabrics (Grab Test), shall be used with the modification that all machine attachments for determining maximum load shall be disengaged and the speed of the pulling clamp shall be 505 mm/min (20 in./min).

8.55.4.2 Five 50 mm × 100 mm (2 in. × 4 in.) steel plates conforming to Class 301 or Class 304 of ASTM A 666, *Standard Specification for Annealed or Cold Worked Austenitic Stainless Steel Sheet, Strip, Plate, and Flat Bar*, which have been polished to a No. 4 finish shall be used.

8.55.4.3 A 38 mm (1½ in.) wide steel roller weighing 4.53 kg, ±0.06 kg (10 lb, ±2 oz), shall be used.

8.55.4.4 A pressure sensitive tape used for testing the adhesion of the coating or the laminate shall be used and shall have the required adhesion value specified in 8.55.4.6.11.

8.55.4.5 Candidate pressure sensitive tapes, for potential use in testing the adhesion of coatings or laminates, shall have the adhesion value of the candidate tapes be determined by the procedure specified in 8.55.4.6.12.

8.55.4.6 Procedure for Determining Adhesion Value of Candidate Pressure Sensitive Tapes.

8.55.4.6.1 The equipment specified in 8.55.4.1, 8.55.4.2, and 8.55.4.3 shall be used in the procedure for adhesion value determination.

8.55.4.6.2 Prior to each adhesion value determination procedure, the steel plates specified in 8.55.4.2 shall be thoroughly cleaned with diacetone alcohol, methyl alcohol, or methyl ethyl ketone, using a clean piece of lint-free wiping tissue.

8.55.4.6.3 Five specimens from the same production batch of each candidate pressure sensitive tape shall be tested. Each candidate tape specimen shall measure 25 mm × 200 mm (1 in. × 8 in.).

8.55.4.6.4 Each of the five tape specimens of one candidate tape sample, specified in 8.55.4.6.3, shall be applied to the clean surface of each of the five steel plates, specified in 8.55.4.2, so that it covers the entire length of the plate and extends 100 mm (4 in.) beyond one end of the plate.

8.55.4.6.5 Each candidate tape specimen shall be pressed down by passing the roller, specified in 8.55.4.3, over the tape six times, three times in each direction.

8.55.4.6.6 The free end of the candidate tape specimen shall be doubled back over the specimen 180 degrees, and 25 mm (1 in.) of the tape shall be peeled off the plate.

8.55.4.6.7 Each plate, with the candidate tape specimen affixed, shall be tested separately for adhesion value determination.

8.55.4.6.8 The plate shall be inserted and clamped in the bottom jaw of the tensile-testing machine, specified in 8.55.4.1, with the free end of the candidate tape specimen oriented downward.

8.55.4.6.9 The free end of the candidate tape specimen shall be looped upward and inserted and clamped in the upper jaw so as to peel the tape specimen from the plate when the jaw motion is started.

8.55.4.6.10 The minimum tension required to remove the remainder of the candidate tape specimen from the steel plate, excluding the final 25 mm (1 in.), shall be recorded by an autographic recording device.

8.55.4.6.11 The recorded minimum tension value of the candidate tape specimen shall be the adhesion value.

8.55.4.6.12 All five specimens of the candidate tape shall have an adhesion value of not less than 4.8 N/cm (2¾ lb/in.) width, and not more than 6.2 N/cm (3½ lb/in.) width for the pressure sensitive tape to be selected for use in testing the adhesion of the coating or the laminate.

8.55.5 Procedure.

8.55.5.1 Immediately after each of the five specimens has completed the testing specified in Section 8.54, Wet Flex Test, the five specimens shall be tested and evaluated for adhesion.

8.55.5.2 A razor cut design shall be symmetrically centered within the 100 mm × 200 mm (4 in. × 8 in.) of each of the five specimens. The cut design shall be two X cuts and three horizontal cuts and shall be made as shown in Figure 8.55.5.2. The cuts shall be made with a sharp razor blade through the coating or laminate and adhesive layers, but shall not cut through the base cloth.

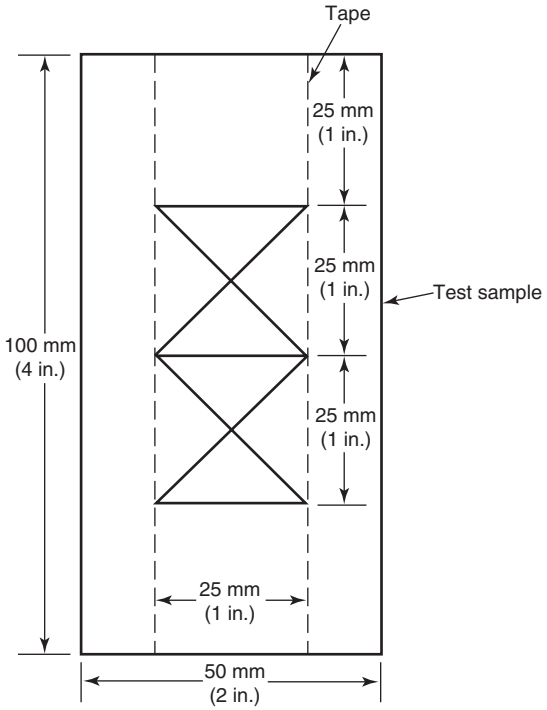

Note: Solid lines indicate cut lines.

FIGURE 8.55.5.2 Cuts.

8.55.5.3 Five 25 mm × 200 mm (1 in. × 8 in.) pieces of pressure sensitive tape, taken from a lot of material that has qualified for use in testing the adhesion of coatings or laminates by the procedure specified in 8.55.4.6, shall be used for adhesion testing.

8.55.5.4 One piece of the pressure sensitive tape, specified in 8.55.5.3, shall be used for each of the specimens.

Copyright National Fire Protection Association
Provided by IHS under license with NFPA
No reproduction or networking permitted without license from IHS
Not for Resale

8.55.5.5 The pressure sensitive tape shall be applied to the specimens so that it covers the entire length of the specimen, centered over the X cuts and horizontal cuts as shown in Figure 8.55.5.2, and extending 100 mm (4 in.) beyond one end of the specimen.

8.55.5.6 The pressure sensitive tape shall be pressed onto the specimen by passing the roller over the specimen six times, three times in each direction.

8.55.5.7 The free end of the pressure sensitive tape shall be doubled back over the specimen 180 degrees, and 25 mm (1 in.) of the pressure sensitive tape shall be peeled off the specimen.

8.55.5.8 The specimen shall then be inserted and clamped in the bottom jaw of the tensile-testing machine, specified in 8.55.4.1, with the free end of the pressure sensitive tape downward.

8.55.5.9 The free end of the tape shall be looped upward and inserted and clamped in the upper jaw of the tensile-testing machine so as to peel the pressure sensitive tape from the specimen when the jaw motion is started.

8.55.5.10 The jaw motion of the tensile-testing machine shall be engaged to peel the pressure sensitive tape from the specimen.

8.55.5.11 Following removal of the pressure sensitive tape, the tape and specimen shall be visually examined for compliance.

8.55.6 Report.

8.55.6.1 Evidence of any cracking on the face shall be recorded and reported.

8.55.6.2 Evidence of any delamination shall be recorded and reported.

8.55.6.3 Evidence of any particulate on the pressure sensitive tape adhesive from the coating shall be recorded and reported.

8.55.7 Interpretation.

8.55.7.1 A moderate amount of specks on the pressure sensitive tape adhesive from the coating shall not constitute failure.

8.55.7.2 A greater than moderate amount of specks, or particulate larger than specks on the pressure sensitive tape adhesive from the coating shall constitute failure.

8.55.7.3 Exposure of adhesive beneath a laminate layer shall constitute failure.

8.55.7.4 The failure of any one specimen shall constitute failure of the test.

8.56 Flex at Low Temperature Test.

8.56.1 Application. This test method shall apply to garment outer shell materials, glove outer shell materials, helmet faceshields, footwear, helmet outer covers, and helmet shrouds.

8.56.2 Samples.

8.56.2.1 Samples shall be taken from the fabric lot used in the construction of the garment.

8.56.2.2 Samples shall be conditioned as specified in 8.1.3.

8.56.3 Specimens.

8.56.3.1 A minimum of five specimens shall be tested.

8.56.3.2 Specimens shall measure 25 mm × 100 mm (1 in. × 4 in.), with the long dimension in the warp or wale direction.

8.56.4 Apparatus. The test jig as shown in Figure 8.56.4 shall be used.

8.56.5 Procedure.

8.56.5.1 The test samples and test jig, as shown in Figure 8.56.4, shall be conditioned for 4 hours at a temperature of –32°C (–25°F).

8.56.5.2 At the end of the conditioning period, with the jig and the test specimens still in the test atmosphere, the specimen shall be placed in the open jig with the rod in the center of the fabric. The face of the fabric shall be positioned away from the rod.

8.56.5.3 The jig shall be closed in less than 3 seconds so that the specimen is bent face out around the rod until the back of the specimen touches itself.

8.56.5.4 The tested fabric shall be examined without magnification.

8.56.6 Interpretation. Failure of any one specimen shall constitute failure of sample unit of production.

8.57 Resistance to High Temperature Blocking Test.

8.57.1 Application. This test method shall apply to proximity fire fighting garment outer shell materials, proximity fire fighting glove outer shell materials, proximity fire fighting helmet outer covers, and proximity fire fighting helmet shrouds.

8.57.2 Specimens. Specimens shall be tested after being subjected to the procedure specified in 8.1.3.

8.57.3 Procedure.

8.57.3.1 Blocking test procedure shall be as stated in Method 5872, *Temperature, High, Effect on Cloth Blocking*, of Federal Test Method Standard 191A, *Textile Test Methods*.

8.57.3.2 Following each test procedure the test specimen shall be examined to determine pass or fail performance.

8.57.4 Report. Any evidence of blocking shall be recorded and reported.

8.57.5 Interpretation. Failure of any one specimen shall constitute failure of the unit of product.

8.58 Drag Rescue Device (DRD) Materials Strength Test.

8.58.1 Application.

8.58.1.1 This test shall apply to DRD materials and DRD seams, splices, and joints.

8.58.1.2 Modifications to this test method for testing DRD seams, splices, and joints shall be as specified in 8.58.7.

8.58.2 Samples.

8.58.2.1 Five samples shall be taken from each different DRD material.

8.58.2.2 Five samples shall be taken from each different type of DRD seam, splice, and joint.

8.58.2.3 Samples for conditioning shall be at least 1 m (1 yd) lengths of material including seams for seam testing.

8.58.3 Specimens.

8.58.3.1 Specimens shall be tested after being subjected to the conditioning specified in 8.1.2.

Copyright National Fire Protection Association
Provided by IHS under license with NFPA
No reproduction or networking permitted without license from IHS
Not for Resale

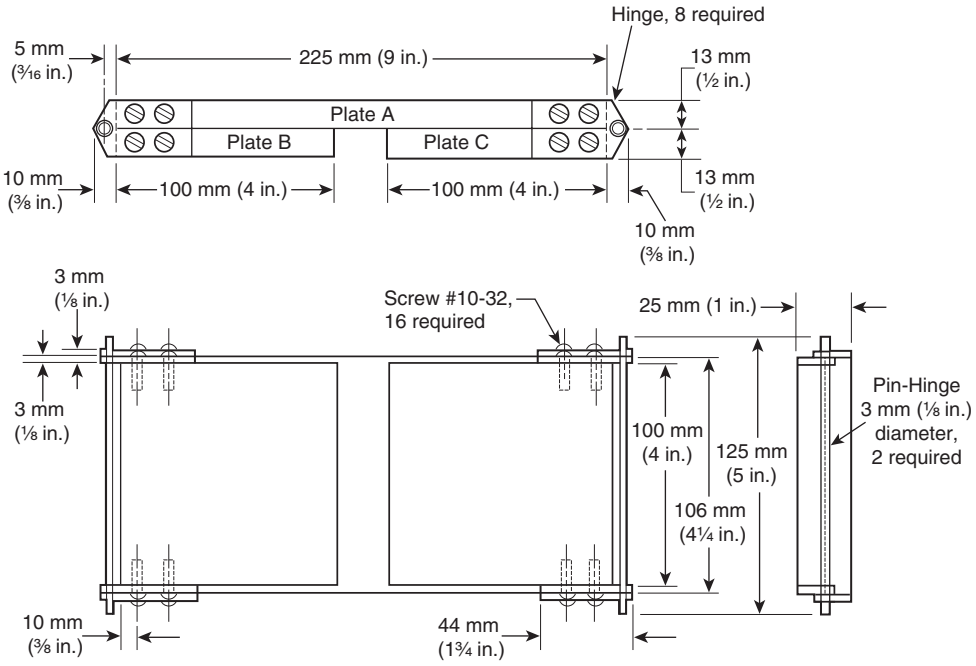

Material: Plates and hinges — aluminum alloy.
Hinge pins — steel rod.
Smooth machine finish all over.

FIGURE 8.56.4 Jig Assembly — Resistance to Low Temperature Test.

8.58.3.2 A total of five material specimens representative of the DRD materials shall be tested for each material type.

8.58.3.3 A minimum of five seam, splice, and joint specimens representative of the DRD seams, splices, and joints shall be tested for each seam, splice, and joint type.

8.58.4 Procedure. Specimens shall be tested for breaking strength only as specified in ASTM D 6775, *Standard Test Method for Breaking Strength and Elongation of Textile Webbing, Tape and Braided Material.*

8.58.5 Report.

8.58.5.1 The breaking strength of each specimen shall be recorded and reported.

8.58.5.2 The average breaking strength of all specimens shall be calculated, recorded, and reported.

8.58.6 Interpretation. The average breaking strength shall be used to determine pass or fail performance.

8.58.7 Specific Requirements for Testing DRD Seams, Splices, and Joints.

8.58.7.1 The test specimen shall be as specified in ASTM D 6775, *Standard Test Method for Breaking Strength and Elongation of Textile Webbing, Tape and Braided Material,* and shall include the seam, splice, and joint in the middle of the test specimen.

8.58.7.2 Testing shall be performed as specified in 8.58.4.

8.59 Drag Rescue Device (DRD) Function Test.

8.59.1 Application. This test shall apply to DRD installed in protective coats and protective coverall elements.

8.59.2 Samples.

8.59.2.1 Samples shall consist of complete protective coats or protective coveralls with DRD installed.

8.59.2.2 Samples shall be conditioned as specified in 8.1.3.

8.59.3 Specimens.

8.59.3.1 Specimens for testing shall be complete coat or complete coverall garment elements with DRD.

8.59.3.2 A minimum of three specimens shall be tested for each garment element type.

8.59.3.3 Each specimen shall have all garment layers in place.

8.59.4 Apparatus.

8.59.4.1 One pair of protective gloves shall be provided.

8.59.4.1.1 The gloves shall be certified as compliant with this standard and shall be properly sized to fit the test technician.

8.59.4.1.2 For structural fire fighting ensembles, the protective gloves shall be structural fire fighting gloves.

8.59.4.1.3 For proximity fire fighting ensembles, the protective gloves shall be proximity fire fighting gloves.

8.59.4.2 One IAFF "Rescue Randy" Model 1475 mannequin, or equivalent, shall be provided as the test mannequin.

8.59.4.3 One open-circuit SCBA shall be provided.

8.59.4.3.1 The SCBA shall be certified as compliant with NFPA 1981, *Standard on Open-Circuit Self-Contained Breathing Apparatus for Fire and Emergency Services.*

Copyright National Fire Protection Association
Provided by IHS under license with NFPA
No reproduction or networking permitted without license from IHS
Not for Resale

8.59.4.3.2 The SCBA shall be equipped with an empty 60-minute rated breathing air cylinder.

8.59.5 Procedure.

8.59.5.1 The DRD shall be inspected to insure correct installation within the garment element in accordance with manufacturer's instructions.

8.59.5.2 The DRD shall be in the secured, non-deployed, position.

8.59.5.3 The size of the specimen shall properly fit the mannequin by conforming to the dimensions of the mannequin chest circumference in accordance with the manufacturer's sizing system.

8.59.5.4 The test specimen shall be donned on the test mannequin in accordance with the manufacturer's instructions for proper wearing, and shall be tested with an SCBA.

8.59.5.5 The SCBA shall be donned in accordance with the SCBA manufacturer's instructions over the specimen.

8.59.5.6 The test mannequin shall be placed on its side on a concrete surface.

8.59.5.7 With the test mannequin in position, the test technician shall don the gloves specified in 8.59.4.1.

8.59.5.8 The test technician shall deploy the DRD according to the manufacturer's instructions.

8.59.5.9 Deployment time shall be measured beginning when the test technician touches the mannequin and shall stop when the dragging motion begins.

8.59.5.10 The test technician shall drag the mannequin in a straight line using the DRD, in accordance with the manufacturer's instructions, for a distance of 2.5 m, +0.5/−0 m (8 ft, +1½/−0 ft).

8.59.5.11 The deployment of the DRD and the dragging of the mannequin shall be observed to determine if the SCBA is dislodged from the "as donned position."

8.59.6 Report.

8.59.6.1 The deployment time of the DRD shall be recorded and reported.

8.59.6.2 The ability to drag the mannequin the required distance shall be recorded and reported.

8.59.6.3 Change in the position of the SCBA during either the deployment of the DRD or the dragging of the mannequin shall be recorded and reported.

8.59.7 Interpretation.

8.59.7.1 The inability to deploy the device in 10 seconds or less, or the inability to drag the mannequin 2.5 m (100 ft) shall constitute failing performance.

8.59.7.2 The dislodging of the SCBA that causes the SCBA to move higher on the torso of the mannequin from the donned position or causes the SCBA to separate from the mannequin shall constitute a failure.

8.59.7.3 Failure of one or more specimens shall constitute failing performance.

8.60 Conductive Heat Resistance Test 3.

8.60.1 Application.

8.60.1.1 This test method shall apply to proximity footwear upper material.

8.60.2 Samples.

8.60.2.1 Samples for conditioning shall be whole footwear.

8.60.2.2 There shall be at least three samples of footwear.

8.60.3 Specimens.

8.60.3.1 A total of three specimens of footwear shall be tested.

8.60.3.2 Footwear specimens shall be cut from the thinnest portions of the footwear upper or from a composite that is representative of footwear upper construction at the thinnest part.

8.60.3.3 Specimens shall be conditioned as specified in 8.1.3.

8.60.4 Procedure. Specimens shall be tested in accordance with ASTM F 1060, *Standard Test Method for Thermal Protective Performance of Materials for Protective Clothing for Hot Surface Contact*, with the following modifications:

(1) Specimens shall be tested using an exposure temperature of 100°C (212°F). The pressure applied during the test shall be 3.45 kPa, ±0.35 kPa (0.5 psi, ±0.05 psi).
(2) The test exposure duration shall be 10 minutes.

8.60.5 Report.

8.60.5.1 The maximum temperature during the 10-minute exposure.

8.60.6 Interpretation.

8.60.6.1 Pass/fail determinations shall be based on the average temperature of all specimens tested.

8.61 Radiant Heat Resistance Test 2.

8.61.1 Application. This test method shall apply to proximity protective footwear.

8.61.2 Samples. Samples for conditioning shall be complete footwear.

8.61.3 Specimen Preparation.

8.61.3.1 A minimum of three complete footwear items shall be tested.

8.61.3.2 Specimens shall be conditioned in accordance with 8.1.3 and 8.1.9.

8.61.4 Apparatus. The apparatus shall consist of the following:

(1) Radiometer with a spectral response flat to within ±3 percent of not less than 1.10 to 10.0 μm with an accuracy of ±5 percent
(2) Radiant panel with an effective radiating surface of not less than 150 mm × 150 mm (6 in. × 6 in.) and an emittance approximating that of a blackbody of 1000°K, ±200°K (1340°F, ±360°F)
(3) Thermocouple with meter
(4) Test chamber that prevents interference from air movement

8.61.5 Procedure.

8.61.5.1 Tests shall be done on the toe, vamp, quarter, gusset if present, and shaft. If different types or thickness of materials are used for other areas of the upper, these areas shall also be tested.

Copyright National Fire Protection Association
Provided by IHS under license with NFPA
No reproduction or networking permitted without license from IHS
Not for Resale

8.61.5.2 The radiant panel shall be placed in front of the radiometer, parallel to the plane tangent to the radiometer. The radiant panel shall be adjusted to obtain a stable, uniform irradiance of 4.0 W, +0.4/–0.0 W (1.0 cal/cm^2·sec, +0.01/–0.0 cal/cm^2·sec), over a minimum 75 mm (3 in.) diameter circle located on the above plane and centered at the center of the test area. Calibration shall be achieved when the irradiance changes by less than 10 percent during a 3-minute period.

8.61.5.3 The thermocouple shall be affixed to the inside surface of the lining next to the foot in the center of the test area. The radiometer shall be replaced with the protective footwear with the test area oriented parallel to the plane tangent to the heat source at the same distance from the heat source. The area shall be exposed for 100 seconds, +5/–0 seconds.

8.61.5.4 The thermocouple temperature shall be recorded at 100 seconds of exposure.

8.61.6 Report.

8.61.6.1 The temperature at 100 seconds of exposure shall be reported for each specimen.

8.61.6.2 The average temperature at 100 seconds of exposure for all specimens shall also be calculated and reported.

8.61.7 Interpretation. The average temperature at 100 seconds of exposure for all specimens tested shall be used to determine pass/fail performance.

8.62 Light Degradation Resistance Test.

8.62.1 Application. This test method shall apply to moisture barrier materials and CBRN barrier layers.

8.62.2 Samples.

8.62.2.1 Samples for conditioning shall be at least 380 mm (15 in.) square and shall consist of a composite constructed using a layer of 7.5 oz natural Nomex®, the moisture barrier, a layer of 3.8 oz, ±0.3 oz, aramid needle punched nonwoven, quilted to a 3.4 oz, ±0.2 oz, aramid woven plain weave thermal barrier material, and another layer of 7.5 oz natural Nomex®. The four layer composite sample shall be stitched around the entire periphery.

8.62.2.2 Where the layer intended to be the moisture barrier is configured of a composite that includes outer shell, moisture barrier, or thermal barrier combinations, the samples to be preconditioned shall be constructed using those materials.

8.62.2.3 The moisture barrier layer shall be removed from the four layer composite samples after all preconditioning has been completed and shall become the moisture barrier specimen.

8.62.2.4 Where the moisture barrier is configured as indicated in 8.62.2.2, specimens shall be permitted to be a composite of layers provided that the layer intended to be the moisture barrier will face the light source in the test apparatus and provided that the specimen was preconditioned according to 8.62.2.2.

8.62.3 Sample Preparation.

8.62.3.1 Sample composites shall be subjected to two cycles of the following conditioning:

(1) The sample shall first be subjected to the procedure specified in 8.1.2.
(2) The sample shall then be conditioned as specified in 8.1.3.
(3) The sample shall then be conditioned as specified in 8.1.5.
(4) The sample shall then be conditioned at a temperature of 21°C, ±3°C (70°F, ±5°F), and a relative humidity of 65 percent, ±5 percent, for at least 4 hours.

8.62.4 Specimen Preparation.

8.62.4.1 The moisture barrier material will be removed from the conditioned sample composite and be cut into specimens at least 150 mm (6 in.) square.

8.62.4.2 A minimum of four specimens shall be tested.

8.62.5 Procedure.

8.62.5.1 Light resistance testing shall be conducted in accordance with ASTM G 155, *Standard Practice for Operating Xenon Arc Light Apparatus for Exposure of Non-Metallic Materials*, using Cycle 8 Exposure Conditions. Both inner and outer filters shall be borosilicate. Exposure duration shall not include dark cycles.

8.62.5.2* For each specimen, a piece of cardstock shall be cut in equal dimensions to the specimen. The specimen shall be stapled to the cardstock at each corner with the film side of the specimen away from the cardstock. The cardstock-backed specimen shall be clipped into the test apparatus, insuring clips do not contact the specimen, and the film side of the specimen is oriented toward the light source.

8.62.5.3 Specimens shall be subjected to 40 hours of continuous light exposure.

8.62.5.4 Specimens shall be removed from the test apparatus and conditioned in a dark environment at a temperature of 21°C, ±3°C (70°F, ±5°F), and a relative humidity of 65 percent, ±5 percent, for at least 4 hours.

8.62.5.5 Specimens shall be tested in accordance with ASTM D 751, *Standard Methods for Testing Coated Fabrics, Hydrostatic Resistance, Procedure B – Rising Column Water Method*, Procedure 2, Sections 46–49, with the following modifications:

(1) Alternative test apparatus shall be permitted provided that the exposed area of the specimen is at least 108 mm (4¼ in.) in diameter and the pressure can be applied uniformly over the exposure period at a precision of ± 0.1 kPa (± 0.2 psi).
(2) The applied pressure shall be 13.8 kPa (2 psi) for an exposure period of 1 minute.
(3) Restraining materials shall not be used.
(4) Failing performance shall be if any water appears on the surface of the specimen during the exposure period as discerned by a person with 20/20 vision, or vision corrected to 20/20, at a nominal distance of 305 mm (12 in.) with standard room illumination.

8.62.5.5.1 The moisture barrier specimen shall be placed in the apparatus with the film side facing away from the water source.

8.62.6 Reports. The pass or fail performance for each specimen shall be recorded and reported.

8.62.7 Interpretation. One or more test failures of any specimen shall constitute failure of material.

8.63 Liner Retention Test.

8.63.1 Application. This test method shall apply to protective gloves.

Copyright National Fire Protection Association
Provided by IHS under license with NFPA
No reproduction or networking permitted without license from IHS
Not for Resale

8.63.2 Samples. Samples for conditioning shall be whole gloves.

8.63.3 Specimens.

8.63.3.1 A minimum of three whole gloves each for size small and size large with each liner type shall be tested.

8.63.3.2 Each digit of the glove shall be tested.

8.63.3.3 Specimens shall be conditioned as specified in 8.1.2 and then conditioned as specified in 8.1.3.

8.63.4 Apparatus. Liner retention shall be evaluated with the use of locking forceps and a force measuring gauge.

8.63.5 Procedure.

8.63.5.1 The locking forceps shall be attached to the inner liner of the digit to be tested ensuring that an unattached liner or the outer shell is not grabbed.

8.63.5.2 The hook of the force gauge shall be looped around the locking bridge of the forceps.

8.63.5.3 The digit of the glove shell shall be gripped ensuring that the inner liner is not impeded.

8.63.5.4 The force gauge shall be pulled until 25 N (5½ lbf) registers on the dial and then released.

8.63.5.5 Each digit shall be inspected for indication of detachment of inner liner and/or moisture barrier.

8.63.6 Report. Results shall be recorded and reported as pass or fail.

8.63.7 Interpretation.

8.63.7.1 Failure of any digit of any glove shall constitute failure.

8.63.7.2 Glove shall be permitted to be cut open to verify detachment.

8.64 Reserved.

8.65 Reserved.

8.66 Man-In-Simulant Test (MIST).

8.66.1 Application. This test method shall apply to CBRN protective ensembles.

8.66.2 Samples.

8.66.2.1 Samples shall consist of CBRN protective ensembles including the ensemble garment, helmet, glove, and footwear elements, and the SCBA specified for the ensemble by the ensemble manufacturer. The hood interface component shall also be tested where the hood is not part of the CBRN ensemble garment elements.

8.66.2.2 The ensemble shall be tested with each style of the CBRN SCBA specified by the manufacturer.

8.66.2.3 Garment, glove, and hood elements shall be conditioned as specified in 8.1.11.

8.66.2.4 Where the ensemble garment element does not include booties and the chemical/CBRN barrier material is incorporated into footwear, the footwear shall be conditioned by flexing for 1,000,000 cycles in accordance with Appendix B of FIA 1209, *Whole Shoe Flex*.

8.66.2.5 Samples shall be conditioned at 21°C, ±6°C, and 50 percent, ±30 percent, relative humidity for at least 4 hours.

8.66.3 Specimens.

8.66.3.1 A minimum of four specimens shall be tested. The specimens shall represent a minimum of two different ensemble sizes.

8.66.3.2 Specimens shall be provided to fit or be adjustable to fit the selected test subjects in accordance with the manufacturer's sizing provisions that are specific to each element.

8.66.3.3* None of the components to be tested shall have been previously subjected to MIST testing unless it can be demonstrated that the items are free of contamination.

8.66.3.4 Underclothing and socks shall be permitted to be reused provided they have been laundered with a detergent that has been demonstrated not to cause interference with the analytical method.

8.66.4 Apparatus.

8.66.4.1 The test lab chamber and procedures shall be validated against the Test Operations Procedure (TOP 10-2-022), *Man-In-Simulant Test (MIST) - Chemical Vapor Testing of Chemical/Biological Protective Suits*, September 2001.

8.66.4.2 The test simulant shall be methyl salicylate (MS; $C_8H_8O_8$) CAS #119-36-8, more commonly known as oil of wintergreen. The MS minimum purity shall be 95 percent. Vapor doses shall be measured using Passive Adsorbent Dosimeters (PADs).

8.66.4.3 The test facility shall include areas for dressing, a first stage undressing area adjacent and accessible to the chamber, and a second stage undressing area adjacent and accessible to the first stage undressing area.

8.66.4.4 The test shall be conducted in a sealed chamber with a minimum volume of sufficient dimensions to permit free movement of the test subject(s) when fully dressed in the ensemble.

8.66.4.5 More than one test subject shall be permitted in the chamber at the same time, provided that they can complete all tasks completely in the appropriate time period and that they have an unobstructed direct path to the wind stream.

8.66.4.6 The test chamber shall have a temperature of 25°C, ±2°C, relative humidity of 55 percent, ±10 percent, and a nominal wind speed of 0.9 to 2.2 m/sec (2 to 5 mph). The average wind speed shall be 1.6 m/sec, ±0.2 m/sec (3.5 mph, ±0.5 mph).

8.66.4.7 The standard concentration of MS in the vapor chamber shall be 100 mg/m^3, ±15 mg/m^3, as measured by a real-time infrared analysis of the chamber air or other validated real-time analytical technique.

8.66.4.8 Infrared readings shall be taken every 60 seconds to verify compliance with the concentration requirement, and an air sample shall be taken at least every 10 minutes for validation of infrared readings.

8.66.4.9 Every step shall be taken to avoid generation of liquid aerosol.

8.66.4.10 For the test, a minimum of four PADS shall be placed inside the chamber at defined positions for a known duration.

8.66.4.10.1 PADS shall be the item that is placed on skin of human test subject and in different chamber locations.

Copyright National Fire Protection Association
Provided by IHS under license with NFPA
No reproduction or networking permitted without license from IHS
Not for Resale

8.66.4.10.2 The PADS placed inside the test chamber shall be from the same lot as the dosimeters worn by the test subject and shall be used to calibrate the PADS lot used in the analysis.

8.66.4.11 The exposure time for the chamber PADS shall be 15 minutes, +5/−0 minutes, in length.

8.66.4.12 All test subjects shall be medically and physically suitable to perform these tests without danger to themselves. A medical certificate for each test subject shall have been issued within 12 months prior to testing.

8.66.4.13 Test subjects shall be familiar with the use of chemical protective ensembles and with the selected CBRN SCBA.

8.66.4.14 The test shall be conducted using PADS that affix directly to the skin of the test subjects. The PADS used in ensemble certification shall be the same type of dosimeter that was used during the validation of the MIST test lab. The PADS shall be an adhesive-backed foil packet measuring 25 mm × 35 mm × 0.02 mm, which contains an adsorbent material covered by a high-density polyethylene film that acts as a pseudo-skin barrier. The active surface sampling area of a PADS shall be 3.5 cm^2, ±0.6 cm, and its uptake rate shall be 3.5 cm/min, ±1 cm/min. The four chamber PADS shall be used to calibrate the lot of PADS used in the test.

8.66.5 Procedure.

8.66.5.1 Test subjects shall have followed pretrial procedures that include proper hydration and avoiding personal hygiene products that contain MS.

8.66.5.2 PADs shall be placed on test subjects at the body region locations shown in Figure 8.66.5.2.

8.66.5.2.1 All PADS shall be applied in a clean dressing area, by personnel that have followed pretrial procedures to minimize contamination. Test subjects shall also follow pretrial procedures to minimize contamination.

8.66.5.2.2 Cheek PADS shall be located entirely within the respirator facepiece, and all other PADS shall be located entirely outside the seal of the respirator facepiece.

8.66.5.3 Three additional PADS shall be used to conduct background sampling and for quality control during the trial. These PADS shall be located in, the Stage 1 undress area and the Stage 2 undress area.

8.66.5.4 The test subject shall don the protective ensemble and respirator in accordance with the manufacturer's instructions in an area located away from the test chamber. The test subject shall wear clothing under the CBRN protective ensemble as specified by the manufacturer. Where no undergarments are specified or required by the manufacturer as part of the certified ensemble, the test subject shall wear a short sleeve cotton shirt and shorts or underwear.

8.66.5.5 After sealing the ensemble, the test subject shall enter the test chamber, and the test chamber shall be sealed.

8.66.5.6 The test duration shall be 30 minutes in the chamber with an additional 5-minute decontamination period.

8.66.5.7 The start of the test, in which the test subject enters the MIST chamber, shall be initiated within 60 minutes after removal of the ensemble from conditioning environment.

8.66.5.8 Physical Exercise Routine.

8.66.5.8.1 Once the chamber concentration has been established, the test subject(s) shall perform the following physical activity protocol. The chamber concentration shall remain within acceptable limits during the exercise protocol.

(1) Drag 70 kg (155 lb) human dummy using both hands a distance of 10 m (32½ ft) over 15-second period. Stop and rest for 15 seconds. Repeat exercise twice.
(2) Duck squat, pivot right, pivot left, stand. Repeat exercise twice in each orientation for a total of 1 minute.

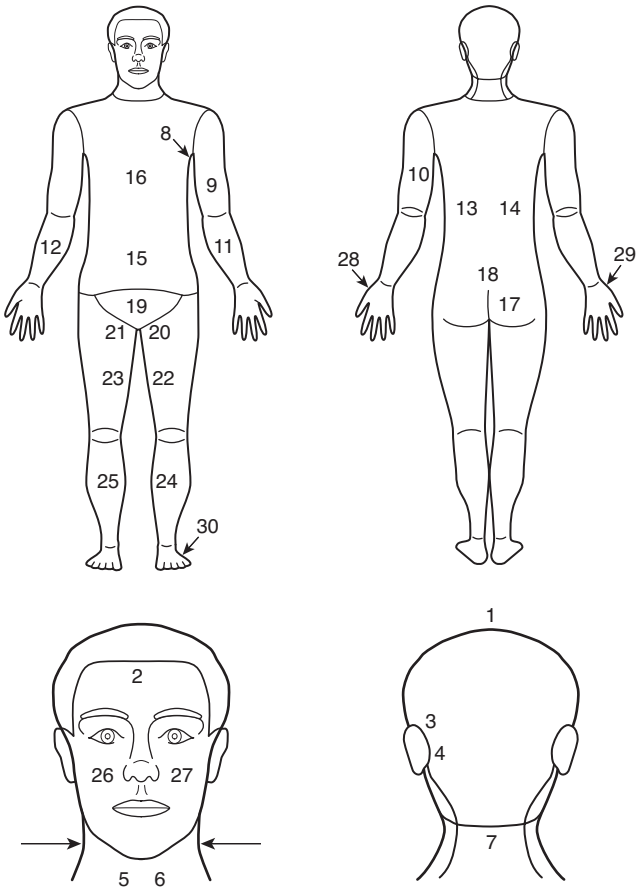

1: scalp (SCA)
2: forehead (F)
3: behind left ear upper (LED)
4: behind left ear (LE)
5: neck right (NED)
6: neck left (NE)
7: nape (NA)
8: left armpit (LA)
9: left inner upper arm (LIU)
10: left outer upper arm (LOU)
11: left forearm (LFA)
12: right forearm (RFA)
13: middle back (MB)
14: middle back dup. (MBD)
15: abdomen (AB)
16: chest (C)
17: right buttock (RB)
18: lower back (LB)
19: groin (GR)
20: crotch (LCR)
21: crotch (RCR)
22: left inner thigh (LIT)
23: right inner thigh (RIT)
24: left inner shin (LIS)
25: right inner shin (RIS)
26: cheek (RM)
27: cheek (LM)
28: left hand (G)
29: right hand (GD)
30: foot (B)

FIGURE 8.66.5.2 Locations of Passive Adsorption Dosimeters (PADS) on Test Subjects.

Copyright National Fire Protection Association
Provided by IHS under license with NFPA
No reproduction or networking permitted without license from IHS
Not for Resale

(3) Stand erect. With arms at sides, bend body to left and return, bend body forward and return, bend body to right and return. Repeat exercise twice in each orientation for a total of 1 minute.
(4) Stand erect. Extend arms overhead in the lateral direction, then bend elbows. Extend arms overhead in the frontal direction, then bend elbows. Repeat exercise twice in each orientation for a total of 1 minute.
(5) Stand erect. Extend arms perpendicular to the sides of torso. Twist torso left and return, twist torso right and return. Repeat exercise twice in each orientation for a total of 1 minute.
(6) Stand erect. Reach arms across chest completely to opposite sides. Repeat exercise twice in each orientation for a total of 1 minute.
(7) Climb two steps of the ladder and touch the ceiling with one hand, using alternate hands each time. Climb down, squat, and touch the floor with both hands. Repeat exercise three times within 1 minute.
(8) Crawl in place for 1 minute.
(9) Sit on stool facing wind for 1 minute.
(10) Sit on stool back to wind for 1 minute.

8.66.5.8.2 Physical activities and rest periods shall be performed in a chamber location that provides an unobstructed exposure of the protective ensemble to the required wind stream.

8.66.5.8.3 Each physical activity and rest cycle shall be 10 minutes. The cycle of exercise and rest shall be completed a total of three times, for a total chamber exposure of 30 minutes. Each exercise cycle shall consist of eight 1-minute activities followed by a 2-minute rest (sitting) period.

8.66.5.8.4 Unless otherwise specified in 8.66.5.8.1(1) through 8.66.5.8.1(10), the test subject shall begin the first repetition of each activity facing the wind stream and shall rotate 90 degrees between each repetition until the time period for that exercise has ended.

8.66.5.8.5 For activity 8, crawling in place, the test subject shall rotate 90 degrees on 15-second intervals during the 1-minute period.

8.66.5.8.6 All physical activities shall be a full range of motion and shall be performed at a moderate speed.

8.66.5.9 Decontamination and Doffing.

8.66.5.9.1 After completion of the 30-minute MIST exposure, the subjects shall move to a decontamination area, where they shall remain for at least 5 minutes. This area shall be well-ventilated to assist in off-gassing of the outside of the ensemble. At this point, all exposed ensemble surfaces, including such items as the respirator, boots, gloves, and helmets shall be washed with a strong soap solution. Where the garment is designed for wet decontamination, it shall be washed with the soap solution as well.

8.66.5.9.2 The participant shall move to the first stage undressing room where all remaining items of clothing, except for underclothes, shall be doffed. The undress process shall not exceed 5 minutes.

8.66.5.9.3 The participant shall proceed to the second stage undressing room where the PADS shall be removed.

8.66.5.9.4 Each PADS shall be backed with aluminum foil, placed in individual sealed glass vials with a nonadsorbent lid liner, and stored in a refrigerated environment [4°C (38°F)] and shall not be removed from the environment for more than 15 minutes before processing.

8.66.6 Analysis.

8.66.6.1* The sensitivity of the analytical technique shall provide for a detection limit of 3 mg/min/m^3 (approximately 30 ng MS per PADS). The analytical technique shall be linear up to at least a dose of 2000 mg/min/m^3 with a coefficient of variation on replicate spiked dosimeter samples of less than 15 percent.

8.66.6.2 Processing of the PADS samples shall be performed within 24 hours of exposure. Where liquid extraction of the PADS samples is performed, samples shall be permitted to be stored at 4°C (39°F) for up to 7 days before analysis.

8.66.6.3 Each lot of PADS used for testing shall be calibrated to determine its uptake rate. PADS shall be calibrated by placing at least four PADS from each representative lot within the chamber for 30 minutes, +5/−0 minutes during the MIST test. The chamber PADS exposure time shall be set such that the PADS dosage does not exceed the linear range of the analytical technique. The average of the chamber vapor concentration and the actual time of exposure shall be used to determine the uptake rate from the following equation:

$$m = uACt$$

where:
m = the total mass measured on the PAD in mg
u = the uptake rate in cm^3/min
A = the average active area of the PAD in cm^2
Ct = the chamber vapor dosage in mg/min/cm^3.

8.66.6.4 For the test results to be considered valid for a given ensemble, no more than one PAD from each of the body region locations tested (i.e., no more than one PADS out of the four replicates for any particular region) shall be permitted to be lost to analysis over the course of the four test subjects.

8.66.7 Calculations.

8.66.7.1 The arithmetic mean for the calibrated uptake rate shall be used to calculate the dosage measured by each PADS $\left(Ct_{inside_i}\right)$ from the same equation based on the measured mass taken up by the PADS. Finally, the protection factor at each PADS location i inside the ensemble shall be calculated using the following equation:

$$PF_i = \frac{Ct_{outside}}{Ct_{inside_i}}$$

where the $Ct_{outside}$ shall be determined from the measured chamber vapor dosage of the individual trial over the entire exposure. The value for $Ct_{outside}$ shall be the average of the chamber MS concentration readings taken during the course of the test subject exposure period.

8.66.7.2 All results for each PADS location shall be expressed in terms of the local physiological protective dosage factor ($PPDF_i$) value and shall be calculated according to the following equation:

$$local\ PPDF_i = \frac{OSED_i}{25} PF_i$$

8.66.7.2.1* The site-specific onset of symptoms exposure dosages (OSED) for each PADS shall be based on ECt_{10} values for mustard blistering/ulceration according to Table 8.66.7.2.1.

Copyright National Fire Protection Association
Provided by IHS under license with NFPA
No reproduction or networking permitted without license from IHS
Not for Resale

Table 8.66.7.2.1 Site-Specific Onset of Symptoms Exposure Dosage (OSED) by PAD Location

Body Region	PADS Locations	OSED ($mg/min/m^{-3}$)
Head/neck	1, 1A, 2, 3, 4, 5, 6, 19, 19A	100
Torso/buttocks, excluding perineum	11, 12, 13, 13A, 14, 14A, 15	100
Arm/hand	7, 8, 9, 10, 10A, 20, 20A	50
Leg/foot	17, 17A, 18, 18A, 21	100
Perineum	16, 16A	25

8.66.7.2.2 The average local $PPDF_i$ values at each PAD location for all specimens tested shall be calculated.

8.66.7.3 A systemic physiological protective dosage factor ($PPDF_{sys}$) shall also be calculated from the PADS data. The systemic protection analysis shall use the systemic weighting body region hazard analysis values from Defence Research Establishment Suffield Report and National Research Council Report to calculate $PPDF_{sys}$ for each ensemble test. The $PPDF_{sys}$ for each specimen shall calculated as follows:

$$PPDF_{sys} = \frac{\sum_i \frac{dz_i}{ED_{50_i}}}{\sum_i \frac{dz_i}{ED_{50_i} PF_i}}$$

where each of the terms is calculated using the information in Table 8.66.7.3.

8.66.7.3.1 The average $PPDF_{sys}$ for all specimens tested shall be calculated and reported.

8.66.8 Report.

8.66.8.1 The average local $PPDF_i$ values for each PAD location shall be recorded and reported.

8.66.8.2 The $PPDF_{sys}$ value for each specimen and the average $PPDF_{sys}$ value for the ensemble tested shall be recorded and reported.

8.66.9 Interpretation. The average local $PPDF_i$ values at each PAD location and the $PPDF_{sys}$ value for each specimen shall be used to determine pass or fail performance.

8.67 Chemical Permeation Resistance Test.

8.67.1 Application.

8.67.1.1 This method shall apply to the CBRN barrier layer and seams used in elements and ensembles for CBRN terrorism agent protection.

8.67.1.2 Specific requirements for testing the garment and hood CBRN barrier layer shall be as specified in 8.67.7.

8.67.1.3 Specific requirements for testing the garment and hood CBRN barrier layer seams shall be as specified in 8.67.8.

8.67.1.4 Specific requirements for testing the glove CBRN barrier layer and seams shall be as specified in 8.67.9.

Table 8.66.7.3 ED_{50_i} Values by PAD and Body Location

Body Region *i* for BRHA Model	PADs Mapped to This Region*	Area of Body Region (dz_i, cm^2)	ED_{50_i} for Severe Effects (VX) for Body Region (mg/individual)
Scalp	1,1A	350	0.76
Ears	2,3	50	0.46
Face, cheeks and neck	4,5,19,19A	300	0.48
Chin and neck	4,5	200	0.36
Nape	6	100	1.72
Abdomen	13A	2858	2.23
Back	11,12,14A	2540	2.65
Axillae	7	200	2.07
Upper arm medial	8	488	2.80
Upper arm lateral	9	706	6.57
Elbow fold	8,9,10,10A	50	2.09
Elbow	8,9,10,10A	50	2.25
Forearm extensor	10,10A	487	2.80
Forearm flexor	10,10A	706	6.57
Hands dorsum	20,20A	200	2.91
Hands palmar	20,20A	200	9.24
Buttocks	14	953	4.26
Groin	13,15	300	1.22
Scrotum	16,16A	200	0.11
Thigh anterior	17,17A	2845	6.57
Thigh posterior	17,17A	1422	4.26
Knee	17,17A,18,18A	200	7.14
Popliteal space (back of knees)	17,17A,18,18A	100	2.09
Shins	18,18A	1897	6.57
Calves	18,18A	948	2.80
Feet dorsum	21	500	6.60
Feet plantar	21	300	7.14

*Average dosage from each PAD, and then calculate PF_i.

8.67.1.5 Specific requirements for testing footwear CBRN barrier layer shall be as specified in 8.67.10.

8.67.2 Sample Preparation. Specimens shall then be conditioned at a temperature of 21°C, ±3°C (70°F, ±5°F), and at a relative humidity of 80 percent, ±5 percent, for at least 4 hours prior to permeation testing.

8.67.3 Specimens.

8.67.3.1 A minimum of three specimens of each material shall be tested against each chemical.

Copyright National Fire Protection Association
Provided by IHS under license with NFPA
No reproduction or networking permitted without license from IHS
Not for Resale

8.67.3.2 The CBRN barrier layers shall be tested for chemical permeation resistance.

8.67.3.3 The CBRN barrier layer plus any outer shell or other composite layers normally worn over the CBRN barrier layer shall be permitted to be tested for chemical permeation resistance. Separable layers worn underneath the CBRN barrier layer shall not be tested with the CBRN layer.

8.67.3.4 If the CBRN barrier layer is the outermost layer in the composite, then it shall be tested for chemical permeation resistance without additional layers on top.

8.67.4 Procedures.

8.67.4.1 Specimens shall be tested for permeation resistance for not less than 60 minutes against the chemicals specified in 8.67.4.2 and 8.67.4.3 in accordance with ASTM F 739, *Standard Test Method for Resistance of Protective Clothing Materials to Permeation by Liquids or Gases Under Conditions of Continuous Contact,* with the following modifications:

(1) The test cells shall be designed to accommodate the introduction of liquid chemicals in a safe manner.
(2) Testing shall be conducted in an open-loop configuration for the collection of permeant.
(3) The collection media shall be filtered air flowed through the bottom of the test cell at a rate of 1 Lpm, ±0.1 Lpm, with a relative humidity of 80 percent, ±5 percent.
(4) Analytical methods used shall be sensitive to the permeant at concentrations of at least one order of magnitude lower than the required end points.
(5) Where cumulative permeation end points are not specified in this standard, a permeation rate of 0.1 μg/cm^2/min, as defined by ASTM F 739, *Standard Test Method for Resistance of Protective Clothing Materials to Permeation by Liquids or Gases Under Conditions of Continuous Contact,* shall be used.

8.67.4.2 The following liquid chemicals shall be tested:

(1) Liquid chemical warfare agents
   (a) Distilled sulfur mustard: [HD; bis (2-chloroethyl) sulfide] 505-60-2; at 32°C, ±1°C (90°F, ±2°F)
   (b) Soman: (GD; o-pinacolyl methylphosphonofluoridreate), 96-64-0; at 32°C, ±1°C (90°F, ±2°F)
(2) Liquid toxic industrial chemicals
   (a) Acrolein (allyl aldehyde), 107-02-8; at 32°C, ±1°C (90°F, ±2°F)
   (b) Acrylonitrile (VCN, cyanoethylene), 107-13-1; at 32°C, ±1°C (90°F, ±2°F)
   (c) Dimethyl sulfate (DMS, sulfuric acid dimethyl ester), 77-78-1; at 32°C, ±1°C (90°F, ±2°F)

8.67.4.3 The following gases shall be tested:

(1) Ammonia (NH_3, 7664-41-7); at 32°C, ±1°C (90°F ±2°F)
(2) Chlorine (Cl_2; 7782-50-5); at 32°C, ±1°C (90°F, ±2°F)

8.67.4.4 Permeation Test Configuration.

8.67.4.4.1 For permeation tests involving gases, the gas concentration shall be 350 ppm, +50/–0 ppm, and the test cell shall be assembled in the closed-top configuration.

8.67.4.4.2 For permeation tests involving liquids, the liquid concentration density shall be 10 g/m^2, +1/–0 g/m^2, and the cell shall be assembled in closed-top configuration. The liquid drops shall be applied as nominal 1 μl drops uniformly distributed over the test area of the sample surface. Where a seam, closure, or fixture is included, at least one drop shall be applied to each critical juncture, such as the seam edge.

8.67.5 Report.

8.67.5.1 For permeation testing of chemical warfare agents, the cumulative permeation in 1 hour shall be recorded and reported in μg/cm^2 for each specimen. The average cumulative permeation in 1 hour for all specimens shall be calculated, recorded, and reported. The report shall include the pass or fail results for each chemical tested.

8.67.5.2 For permeation testing of liquid and gaseous toxic industrial chemicals, the normalized breakthrough time shall be recorded and reported in minutes for each specimen. The average normalized breakthrough time shall also be calculated, recorded, and reported.

8.67.6 Interpretation.

8.67.6.1 For permeation testing of chemical warfare agents specified in 8.67.4.2(1), the average cumulative permeation shall be used to determine pass or fail performance.

8.67.6.2 For permeation testing of liquid and gaseous toxic industrial chemicals specified in 8.67.4.2(2), the average normalized breakthrough time shall be used to determine pass or fail performance.

8.67.7 Specific Requirements for Testing Garment and Hood Materials.

8.67.7.1 Samples for conditioning shall be at least 380 mm (15 in.) square and shall consist of all layers of the composite arranged in the order used in the construction of the garment or hood.

8.67.7.2 Composite samples prepared as described in 8.67.7.1 shall be tested after being twice subjected to the following conditioning:

(1) Specimens shall first be subjected to the procedure specified in 8.1.11.
(2) Specimens shall then be conditioned as specified in 8.1.3.
(3) Specimens shall then be conditioned as specified in 8.1.5.

8.67.7.3 The composite sample, including CBRN barrier layer that was conditioned in 8.67.7.2 shall be trimmed to a sample size of 305 mm × 275 mm (12 in. × 11 in.). The trimmed composite samples shall be subject to flexing conditioning as specified in 8.1.12 with the 305 mm (12 in.) direction parallel with the compression action of the machine. The trimmed samples shall be mounted such that outer layer is visible with all layers in their normal "as worn" orientation.

8.67.7.4 Following flexing, the CBRN barrier layer shall be removed from the flexed, trimmed composite sample. Abrasion specimens shall be prepared with the long dimension of the specimen parallel to the original 305 mm (12 in.) dimension of flexed, trimmed composite sample.

8.67.7.5 The layers in the flexed, trimmed composite sample adjacent to the CBRN barrier layer shall be retained for use as the abradants.

8.67.7.6 The CBRN barrier layer samples prepared as specified as 8.67.7.4 and the other samples retained as specified in 8.67.7.5 shall be subjected to abrasion as specified 8.1.13.

8.67.7.7 Following abrading, the permeation test specimen shall be taken from the center of the abraded sample so that

Copyright National Fire Protection Association
Provided by IHS under license with NFPA
No reproduction or networking permitted without license from IHS
Not for Resale

the center of the permeation test and the center of the abraded sample coincide.

8.67.7.8 Use of exterior layers with the CBRN barrier layer specimen shall be permitted. Exterior layer specimens shall be removed from the composite samples that are conditioned as specified in 8.67.7.2.

8.67.7.9 The specimens shall be oriented in the permeation test cell with the exterior surfaces facing the challenge chemical.

8.67.7.10 Specimens shall be tested for permeation resistance as specified in 8.67.2 through 8.67.6.

8.67.8 Specific Requirements for Testing Garment and Hood.

8.67.8.1 Samples for conditioning shall be at least 380 mm (15 in.) square and shall consist of all layers of the composite arranged in the order used in the construction of the garment, hood, or bootie. The CBRN barrier layer shall be constructed with one or more parallel seams that shall extend across the entire 380 mm (15 in.) width of the specimen. Seam shall be constructed in the CBRN barrier layer no closer than 75 mm (3 in.) to one another. The multilayer composite shall be stitched around the entire periphery.

8.67.8.2 Composite samples prepared as described in 8.67.7.1 shall be tested after being twice subjected to the following conditioning:

(1) Specimens shall first be subjected to the procedure specified in 8.1.11.
(2) Specimens shall then be conditioned as specified in 8.1.3.
(3) Specimens shall then be conditioned as specified in 8.1.5.

8.67.8.3 The composite sample, including CBRN barrier layer seam, that was conditioned in 8.67.8.2 shall be trimmed to a sample size of 305 mm × 275 mm (12 in. × 11 in.) with the seam in the center of the sample and parallel to the 275 mm (11 in.) direction. The trimmed composite samples shall be subject to flexing conditioning as specified in 8.1.12 with the 305 mm (12 in.) direction parallel with the compression action of the machine. The trimmed samples shall be mounted such that outer layer is visible with all layers in their normal "as worn" orientation.

8.67.8.4 Specimens for permeation testing shall be cut from CBRN barrier layer of the flexed, trimmed sample such that the seam bisects the specimen.

8.67.8.5 Use of exterior layers with the CBRN barrier layer specimen shall be permitted. Exterior layer specimens shall be removed from the composite samples that are conditioned as specified in 8.67.8.2.

8.67.8.6 The specimens shall be oriented in the permeation test cell with the exterior surfaces facing the challenge chemical.

8.67.8.7 Specimens shall be tested for permeation resistance as specified in 8.67.2 through 8.67.6.

8.67.9 Specific Requirements for Testing Glove Materials and Seams.

8.67.9.1 This test shall apply to all types of glove configurations.

8.67.9.2 Samples for conditioning shall be whole gloves.

8.67.9.3 Glove samples shall be subjected to the following sequence a total of two times prior to permeation testing:

(1) Specimens shall first be subjected to the procedure specified in 8.1.11.
(2) Specimens shall then be conditioned as specified in 8.1.3.
(3) Specimens shall then be conditioned as specified in 8.1.5.

8.67.9.4 Following the conditioning specified in 8.67.9.3, conditioned gloves shall be flexed in a clenching motion with a minimum of a 90 degree rotation of the glove fingers towards the palm a total of 3000 times over a period not greater than 60 minutes.

8.67.9.5 Following the flexing in 8.67.9.4, specimens for permeation resistance testing shall be taken from CBRN barrier layer of the flexed glove. Where the CBRN layer includes seams, specimens shall include seams that bisect the specimens.

8.67.9.6 Use of exterior layers with the CBRN barrier layer specimen shall be permitted. Exterior layer specimens shall be removed from the composite samples that are conditioned as specified in 8.67.9.2.

8.67.9.7 Specimens shall be tested for permeation resistance as specified in 8.67.2 through 8.67.6.

8.67.10 Specific Requirements for Testing Footwear Materials.

8.67.10.1 This test shall apply to all footwear configurations including booties where present.

8.67.10.2 Samples for conditioning shall be whole footwear items.

8.67.10.3 Footwear samples shall be subjected to the following sequence a total of two times prior to permeation testing:

(1) Samples shall first be conditioned as specified in 8.1.5.
(2) Samples shall then be conditioned by flexing 500,000 cycles in accordance with Appendix B of FIA 1209, *Whole Shoe Flex*.

8.67.10.4 Following flexing, samples shall be taken in areas from the footwear upper at the footwear quarter and vamp areas, cut to the dimensions specified for abrading in 8.1.13.

8.67.10.5 The cut samples shall then be conditioned by abrading as specified in 8.1.13 using silicon carbide, ultrafine, 600 grit sandpaper as the abradant in lieu of other specified layers.

8.67.10.6 Following abrading, the permeation test specimen shall be taken from the center of the abraded sample so that the center of the permeation test and the center of the abraded sample coincide.

8.67.10.7 Specimens shall be tested for permeation resistance as specified in 8.67.2 through 8.67.6.

8.68 Puncture Propagation Tear Resistance Test.

8.68.1 Application. This test shall apply to the CBRN barrier layer where the barrier layer is the external layer of the garment.

8.68.2 Sample Preparation.

8.68.2.1 Samples shall be at least 0.5 m (19½ in.) squares of material.

8.68.2.2 Samples shall be conditioned as specified in 8.1.2.

8.68.3 Specimens.

8.68.3.1 Specimens shall be the size specified in ASTM D 2582, *Standard Test Method for Puncture Propagation Tear Resistance of Plastic Film and Thin Sheeting*.

Copyright National Fire Protection Association
Provided by IHS under license with NFPA
No reproduction or networking permitted without license from IHS
Not for Resale

8.68.3.2 A minimum of five specimens in each of the warp, machine or coarse, and filling, cross-machine or wales, directions shall be tested.

8.68.3.3 If the material is nonanisotropic, then ten specimens shall be tested.

8.68.4 Procedure. Specimens shall be tested in accordance with ASTM D 2582, *Standard Test Method for Puncture Propagation Tear Resistance of Plastic Film and Thin Sheeting*.

8.68.5 Report.

8.68.5.1 The puncture propagation tear resistance of each specimen shall be recorded and reported to the nearest 1 N (0.1 lbf).

8.68.5.2 An average puncture propagation tear resistance shall be calculated for warp and filling directions. The average puncture propagation tear resistance calculations shall be recorded and reported.

8.68.6 Interpretation.

8.68.6.1 Pass or fail performance shall be based on the average puncture propagation tear resistance in the warp and filling directions.

8.68.6.2 Failure in any one direction constitutes failure for the material.

8.69 Cold Temperature Performance Test 1.

8.69.1 Application. This test method shall apply to the CBRN barrier layer where the barrier layer is the external layer of the garment.

8.69.2 Sample Preparation.

8.69.2.1 Samples for conditioning shall be at least 50 cm (20 in.) squares of material.

8.69.2.2 Samples shall be conditioned a specified in 8.1.2.

8.69.3 Specimens.

8.69.3.1 Specimens shall be the size specified in ASTM D 747, *Standard Test Method for Apparent Bending Modulus of Plastics by Means of a Cantilever Beam*.

8.69.3.2 A minimum of five specimens consisting of all layers in each of the warp, machine or coarse, and filling, cross-machine or wales, directions shall be tested.

8.69.3.3 If the material is nonanisotropic, then ten specimens shall be tested.

8.69.4 Preparation.

8.69.4.1 Samples for conditioning shall be at least 1 m (1 yd) squares of material.

8.69.4.2 Samples shall be conditioned as specified in 8.1.3.

8.69.5 Procedure.

8.69.5.1 Specimens shall be tested in accordance with ASTM D 747, *Standard Test Method for Apparent Bending Modulus of Plastics by Means of a Cantilever Beam*, with the following modifications:

(1) The test temperature shall be –25°C (–13°F).
(2) The bending moment (N) shall be that applied when the specimen is bent to a 60 degree angular deflection and shall be calculated in inch-pounds as follows:

$$N = \left[(\text{load scale reading}) \times (\text{moment weight})\right] \times 100$$

$$\text{Bending moment (N)} = \text{Bending moment (in.-lbf)} \times 0.113$$

8.69.6 Report. Cold temperature performance results shall be recorded and reported as the average for each material direction.

8.69.7 Interpretation. Failure of the material in any direction shall constitute failing performance.

8.70 Abrasion Resistance Test 2.

8.70.1 Application. This test method shall apply to the CBRN barrier layer where configured as an exterior layer in protective footwear covers.

8.70.2 Samples.

8.70.2.1 Samples for conditioning shall be at least 50 cm (18 in.) squares of material.

8.70.2.2 Samples shall be conditioned as specified in 8.1.3.

8.70.3 Specimens.

8.70.3.1 Specimens shall be the size specified in ASTM D 3884, *Standard Test Method for Abrasion Resistance of Textile Fabrics (Rotary Platform, Double-Head Method)*.

8.70.3.2 A minimum of five specimens shall be tested.

8.70.4 Preparation.

8.70.4.1 Samples for conditioning shall be at least 455 mm (18 in.) squares of material.

8.70.4.2 Samples shall be conditioned as specified in 8.1.3.

8.70.5 Procedure.

8.70.5.1 Specimens shall be tested in accordance with ASTM D 3884, *Standard Test Method for Abrasion Resistance of Textile Fabrics (Rotary Platform, Double-Head Method)*, with the following modifications:

(1) The H-18 Calibrase wheels shall be used with a 1000 g load.
(2) The abrasion shall be continued until a hole, wearthrough, or rupture in the film portion of the material is observed.

8.70.6 Report. The number of cycles required for the formation of a hole, wearthrough, or rupture in the film portion of the material shall be recorded and reported.

8.70.7 Interpretation. The number of cycles required for the formation of a hole, wearthrough, or rupture in the film portion of the material shall be used to determine pass or fail performance.

8.71 Overall Liquid Integrity Test 2.

8.71.1 Application. This test shall apply to protective footwear.

8.71.2 Samples.

8.71.2.1 Samples for conditioning shall be whole footwear.

8.71.2.2 Samples shall be conditioned as specified in 8.1.3.

8.71.3 Specimens. A minimum of three footwear elements shall be tested.

8.71.4 Procedure.

8.71.4.1 Protective footwear shall be tested in accordance with Appendix B of FIA 1209, *Whole Shoe Flex*.

8.71.4.2 The test shall consist of 100,000 flexes.

Copyright National Fire Protection Association
Provided by IHS under license with NFPA
No reproduction or networking permitted without license from IHS
Not for Resale

8.71.4.3 After flexing, the footwear specimen shall be placed in a container that allows its immersion in tap water, treated with a dye and surfactant that achieves a surface tension of 35 dynes/cm, ±2 dynes/cm, to the level of 75 percent of the footwear height measured as specified in 6.10.3.1 and 6.10.3.2.

8.71.4.4 The paper toweling required in FIA 1209 shall be placed inside the footwear specimen such that the paper toweling intimately contacts all areas inside the footwear specimen to the level of within 25 mm (1 in.) of the footwear height measured as specified in 6.10.3.1 and 6.10.3.2.

8.71.5 Report. The appearance of any water mark on the toweling after testing any of the three footwear shall be recorded and reported.

8.71.6 Interpretation. The appearance of any water mark on the toweling after testing any footwear element shall be considered leakage and shall constitute failing performance.

8.72 Flex Cracking Resistance Test.

8.72.1 Application. This test shall apply to protective footwear.

8.72.2 Samples.

8.72.2.1 Samples shall be the actual puncture resistance device component of the footwear.

8.72.2.2 Samples shall be conditioned as specified in 8.1.3.

8.72.3 Specimens. A minimum of three puncture resistance devices shall be tested.

8.72.4 Procedure. Specimens shall be tested and subjected to 1 million flexes in accordance with Section 11.7 of ASTM F 2412, *Standard Test Methods for Foot Protection.*

8.72.5 Report.

8.72.5.1 Specimens shall be examined for flex cracking.

8.72.5.2 Any signs of flex cracking on specimens shall be recorded and reported.

8.72.6 Interpretation. One or more test specimens exhibiting flex cracking shall constitute failing performance.

Annex A Explanatory Material

Annex A is not a part of the requirements of this NFPA document but is included for informational purposes only. This annex contains explanatory material, numbered to correspond with the applicable text paragraphs.

A.1.1 Organizations responsible for specialized functions including, but not limited to, wildland fire fighting, proximity fire fighting, and other specialized fire fighting, emergency medical service, special operations, and hazardous materials response should use appropriate protective clothing and protective equipment specifically designed for those activities.

A.1.1.3 While separate requirements are specified for structural fire fighting and proximity fire fighting protective elements, the optional CBRN requirements apply to ensembles only. Individual elements cannot be separately certified to the optional CBRN criteria in this standard. Only complete ensembles, in which all necessary elements are specified to achieve the stated performance requirements, can be certified to the optional CBRN criteria in this standard.

A.1.1.3.1 Users are cautioned that exposure of ensembles to CBRN terrorism agents should require disposal, particularly if the effectiveness of decontamination cannot be assessed.

A.1.1.5 Fire and emergency response organizations are cautioned that accessories are not a part of the certified product but could be attached to the certified product by a means not engineered, manufactured, or authorized by the manufacturer.

Fire and emergency response organizations are cautioned that if the accessory or its means of attachment causes the structural integrity of the certified product to be compromised, the certified product might not comply with the standard for which it was designed, manufactured, and marketed. Additionally, if the accessory or its attachment means are not designed and manufactured from materials suitable for the hazardous environments of emergency incidents, the failure of the accessory or its attachment means could cause injury to the emergency responder.

Because the aftermarket for certified product accessories is so broad, fire and emergency response organizations are advised to contact both the manufacturer of the accessory and the manufacturer of the certified product and verify that the accessory and its means of attachment are suitable for use in the intended emergency response environment. Fire and emergency response organizations should seek and receive written documentation from both the accessory manufacturer and the manufacturer of the certified product to validate the following information:

(1) The accessory for a certified product, and its attachment method, will not degrade the designed protection or performance of the certified product below the requirements of the product standard to which it was designed, manufactured, tested, and certified.
(2) The accessory, when properly attached to the certified product, shall not interfere with the operation or function of the certified product, or with the operation or function of any of the certified product's component parts.

Users are also cautioned that the means of attachment of the accessory that fail to safely and securely attach the accessory to the certified product can cause the accessory to be inadvertently dislodged from the certified product and create a risk to the wearer or other personnel in the vicinity.

A.1.2 This standard is not designed to be utilized as a purchase specification. It is prepared, as far as practicable, with regard to required performance, avoiding restriction of design wherever possible. Purchasers should specify departmental requirements for items such as color, markings, closures, pockets, and patterns, or other features related to specific elements or ensembles. Tests specified in this standard should not be deemed as defining or establishing performance levels for protection from all structural or proximity fire fighting environments, or in all CBRN terrorism incident environments, when the CBRN terrorism agent option is applied to ensembles.

A.1.2.3 The testing requirements in Chapter 8 of this standard are not intended to establish the limitations of the working environment for fire fighting but are intended to establish material performance. Users should be advised that when a continual increase of heat is felt through the protective ensemble, the protective ensemble could be nearing its maximum capability and injury could be imminent.

Users should be advised that if unusual conditions prevail, or if there are signs of abuse or mutilation of the protective ensemble or any element or component thereof, or if modifications

Copyright National Fire Protection Association
Provided by IHS under license with NFPA
No reproduction or networking permitted without license from IHS
Not for Resale

or replacements are made or accessories are added without authorization of the protective ensemble element manufacturer, the margin of protection might be reduced.

Users should be advised that the protective properties in new structural firefighting protective ensemble elements, as required by this standard, can diminish as the product is worn and ages.

A.1.3.2 Specific design and performance criteria are established in this standard to demonstrate limited protection again CBRN terrorism agents to permit fire fighters to escape and provide limited rescue while escaping the contaminated environment when encountering terrorism incidents. The criteria are not intended to provide for reentry of fire fighters into the contaminated environment. Radiological and nuclear protection is limited to the hazards associated with radiological particulates. This standard does not establish specific criteria for protection from ionizing radiation. Moreover, this standard does not establish criteria for protection from all chemical warfare agents, protection from all biological agents, protection from all weapons of mass destruction, or protection from all toxic industrial chemicals.

A.1.3.8 See A.1.1.5.

A.3.2.1 Approved. The National Fire Protection Association does not approve, inspect, or certify any installations, procedures, equipment, or materials; nor does it approve or evaluate testing laboratories. In determining the acceptability of installations, procedures, equipment, or materials, the authority having jurisdiction may base acceptance on compliance with NFPA or other appropriate standards. In the absence of such standards, said authority may require evidence of proper installation, procedure, or use. The authority having jurisdiction may also refer to the listings or labeling practices of an organization that is concerned with product evaluations and is thus in a position to determine compliance with appropriate standards for the current production of listed items.

A.3.2.2 Authority Having Jurisdiction (AHJ). The phrase "authority having jurisdiction," or its acronym AHJ, is used in NFPA documents in a broad manner, since jurisdictions and approval agencies vary, as do their responsibilities. Where public safety is primary, the authority having jurisdiction may be a federal, state, local, or other regional department or individual such as a fire chief; fire marshal; chief of a fire prevention bureau, labor department, or health department; building official; electrical inspector; or others having statutory authority. For insurance purposes, an insurance inspection department, rating bureau, or other insurance company representative may be the authority having jurisdiction. In many circumstances, the property owner or his or her designated agent assumes the role of the authority having jurisdiction; at government installations, the commanding officer or departmental official may be the authority having jurisdiction.

A.3.2.4 Listed. The means for identifying listed equipment may vary for each organization concerned with product evaluation; some organizations do not recognize equipment as listed unless it is also labeled. The authority having jurisdiction should utilize the system employed by the listing organization to identify a listed product.

A.3.3.5 Bitragion Coronal Arc. See Figure A.3.3.5.

A.3.3.6 Bitragion Inion Arc. For test purposes, the Bitragion Inion Arc is identified as Datum Plane 10. See Figure A.3.3.6.

A.3.3.14 CBRN Barrier Layer. While it is recognized that the entire composite will affect the performance of the ensemble in preventing the penetration of CBRN agents, the identification of the CBRN barrier material is intended to assist with the application of specific ensemble and element tests in this standard.

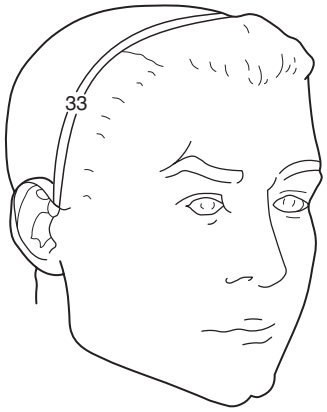

FIGURE A.3.3.5 Bitragion Coronal Arc.

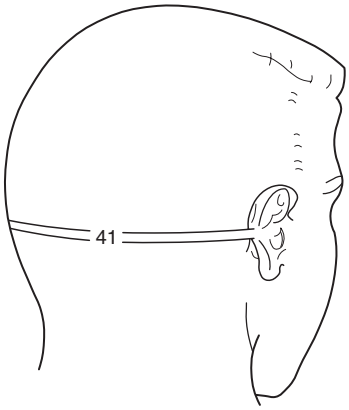

FIGURE A.3.3.6 Bitragion Inion Arc.

A.3.3.15 CBRN Terrorism Agents. Chemical terrorism agents include solid, liquid, and gaseous chemical warfare agents and toxic industrial chemicals. Chemical warfare agents include, but are not limited to, GB (sarin), GD (soman), HD (sulfur mustard), VX, and specific toxic industrial chemicals. Many toxic industrial chemicals, for example chlorine and ammonia, are identified as potential chemical terrorism agents because of their potential availability and degree of injury they could potentially inflict.

Biological agents are bacteria, viruses, or the toxins derived from biological material. The CBRN ensemble protects against biological particles dispersed as aerosols and liquid-borne pathogens. Airborne biological agents could be dispersed in the form of liquid aerosols or solid aerosols (i.e., a powder of bacterial spores). Liquid-borne pathogens could be potentially encountered during a terrorism incident as a result of deliberate disposal or from body fluids released by victims of other weapons (i.e., explosives, firearms).

CBRN ensembles protect from radiological particulates dispersed as aerosols. The protection is defined for blocking or filtering airborne particulate matter and liquid and solid aerosols, but not for radiological gases or vapors. Airborne

Copyright National Fire Protection Association
Provided by IHS under license with NFPA
No reproduction or networking permitted without license from IHS
Not for Resale

particulates have the ability to emit alpha- and beta-particles and ionizing radiation from the decay of unstable isotopes.

A.3.3.39 Entry Fire Fighting. Examples of fires that commonly produce extreme levels of convective, conductive, and radiant heat and could result in incidents incorporating entry fire fighting operations include, but are not limited to, bulk flammable liquid fires, bulk flammable gas fires, bulk flammable metals, and aircraft fires. Highly specialized thermal protection is necessary for persons involved in such extraordinarily specialized operations due to the scope of these operations and because direct entry into flames is made. Usually these operations are exterior operations as in outside of structures. Entry fire fighting is *not* structural fire fighting.

A.3.3.40 Faceshield. The faceshield is not intended as primary eye protection.

A.3.3.45 Footwear. See Figure A.3.3.45.

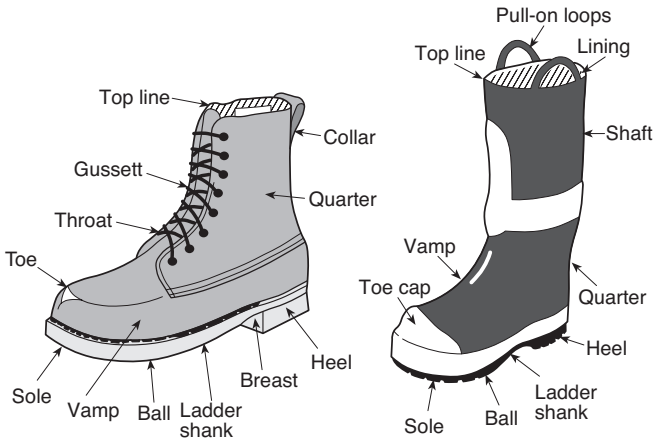

FIGURE A.3.3.45 Identification of Footwear Terms.

A.3.3.77 Particulates. For the purpose of this standard, particulates do not include aerosol or suspended liquid droplets in air. Aerosols are considered liquids.

A.3.3.91 Proximity Fire Fighting. Examples of fires that commonly produce high levels of radiant heat, as well as convective and conductive heat, and could result in incidents incorporating proximity fire fighting operations include, but are not limited to, bulk flammable liquid fires, bulk flammable gas fires, bulk flammable metal fires, and aircraft fires. These operations usually are exterior operations but might be combined with interior operations. Proximity fire fighting is not structural fire fighting but might be combined with structural fire fighting operations. Proximity fire fighting also is not entry fire fighting. The fire fighting activities differ from "entry fire fighting" as proximity fire fighting does not include direct entry of fire fighters into flames. Proximity operations are performed close to the actual fire where the high levels of radiant heat as well as the convective and conductive heat would overcome the thermal protection provided by structural fire fighting protective ensembles and the proximity fire fighting protective ensembles provide enhanced protection from these thermal exposures. After the fire and heat have been controlled at a proximity fire fighting incident, entry into structures or enclosures by fire fighters protected by proximity fire fighting protective ensembles could be made where the incident requires additional operations for control of the incident.

A.3.3.104 Radiological Particulate Terrorism Agents. This standard only provides partial protection from certain radiation sources. By their nature, these ensembles provide protection from alpha-particles, and the element materials and distance will significantly attenuate beta-particles. These ensembles do not provide any protection from ionizing radiation, such as gamma- and x-rays, other than to keep the actual radiological particulate from direct skin contact.

A.3.3.111.2 Major A Seam. Each TC can identify the various layers in the annex if so desired.

A.3.3.121 Structural Fire Fighting Protective Ensemble. Structural fire fighting protective ensembles include, but are not limited to, garments, helmets, hoods, gloves, and footwear.

A.3.3.139 Upper. See Figure A.3.3.45.

A.4.1.4 NFPA, from time to time, has received complaints that certain items of fire and emergency services protective clothing or protective equipment might be carrying labels falsely identifying them as compliant with an NFPA standard.

NFPA advises those purchasing protective ensembles or protective ensemble elements to be aware of the following:

For protective ensembles or protective ensemble elements to meet the requirements of NFPA 1971, *Standard on Protective Ensembles for Structural Fire Fighting and Proximity Fire Fighting*, they must be certified by an independent third-party certification organization. In addition, the item must carry the label, symbol, or other identifying mark of that certification organization.

A protective ensemble or element that does not bear the mark of an independent third-party certification organization is not compliant with NFPA 1971 even if the product label states that the protective ensemble or element is compliant.

For further information about certification and product labeling, Chapters 4 and 5 of NFPA 1971 should be referenced. Also, the definitions for *Certification/Certified*, *Labeled*, and *Listed* in Chapter 3 should be reviewed.

Third-party certification is an important means of ensuring the quality of fire and emergency services protective clothing and equipment. To be certain that an item is properly certified, labeled, and listed, the NFPA recommends that prospective purchasers require appropriate evidence of certification for the specific product and model from the manufacturer before purchasing. Prospective purchasers also should contact the certification organizations and request copies of the certification organization's list of certified products to the appropriate NFPA standard. This listing is a requirement of third-party certification by this standard and is a service performed by the certification organization.

All NFPA standards on fire and emergency services protective clothing and equipment require that the item be certified by an independent third-party certification organization and, as with NFPA 1971 protective ensembles or protective ensemble elements, all items of fire and emergency services protective clothing and equipment must carry the label, symbol, or other identifying mark of that certification organization.

Any item of protective clothing or protective equipment covered by an NFPA standard that does not bear the mark of an independent third-party certification organization is not compliant with the appropriate NFPA standard even if the product label states that the item is compliant.

Copyright National Fire Protection Association
Provided by IHS under license with NFPA
No reproduction or networking permitted without license from IHS
Not for Resale

A.4.2.1 The certification organization should have a sufficient breadth of interest and activity so that the loss or award of a specific business contract would not be a determining factor in the financial well-being of the agency.

A.4.2.5 The contractual provisions covering certification programs should contain clauses advising the manufacturer that, if requirements change, the product should be brought into compliance with the new requirements by a stated effective date through a compliance review program involving all currently listed products.

Without these clauses, certifiers would not be able to move quickly to protect their name, marks, or reputation. A product safety certification program would be deficient without these contractual provisions and the administrative means to back them up.

A.4.2.6 Investigative procedures are important elements of an effective and meaningful product safety certification program. A preliminary review should be carried out on products submitted to the agency before any major testing is undertaken.

A.4.2.7.1 For further information and guidance on recall programs, see 29 CFR 7, Subpart C.

A.4.2.9 Such factory inspections should include, in most instances, witnessing of production tests. With certain products, the certification organization inspectors should select samples from the production line and submit them to the main laboratory for countercheck testing. With other products, it might be desirable to purchase samples in the open market for test purposes.

A.4.3.4 Table A.4.3.4(a) through Table A.4.3.4(k) are provided as a quick reference for conditioning and testing of elements and cannot be relied on as requirements.

A.4.3.4.1 The order of testing is from left to right in Table A.4.3.4(b). Where there is more than one environmental condition for a specific test, the order of environmental conditioning for that test is from top to bottom in Table A.4.3.4(b).

A.4.3.4.2 The order of testing is from left to right in Table A.4.3.4(g). Where there is more than one environmental condition for a specific test, the order of environmental conditioning for that test is from top to bottom in Table A.4.3.4(g).

A.4.3.4.3 CBRN conditioning and testing is shown in Table A.4.3.4(k).

A.4.5.4 For example, this situation exists when the product is wholly manufactured and assembled by another entity, or entities, for a separate entity that puts their own name and label on the product, frequently called "private labeling," and markets and sells the product as their product.

A.4.5.5 Subcontractors should be considered to be, but not be limited to, a person or persons, or a company, firm, corporation, partnership, or other organization having an agreement with or under contract with the compliant product manufacturer to supply or assemble the compliant product or portions of the compliant product.

A.4.6.2 By definition, a hazard might involve a condition that can be imminently dangerous to the end-user. With this thought in mind, the investigation should be started immediately and completed in as timely a manner as is appropriate considering the particulars of the hazard being investigated.

A.4.6.11 The determination of the appropriate corrective action for the certification organization to initiate should take into consideration the severity of the product hazard and its potential consequences to the safety and health of end users. The scope of testing and evaluation should consider, among other things, testing to the requirements of the standard to which the product was listed as compliant, the age of the product, the type of use and conditions to which the compliant product has been exposed, care and maintenance that has been provided, the use of expertise on technical matters outside the certification organization's area of competence, and product hazards caused by circumstances not anticipated by the requirements of the applicable standard. As a guideline for determining which is more appropriate, a safety alert or a product recall, the following product hazard characteristics are provided, which are based on 42 CFR 84, Subpart E, §84.41:

(1) *Critical:* A product hazard that judgment and experience indicate is likely to result in a condition immediately hazardous to life or health (IHLH) for individuals using or depending on the compliant product. If an IHLH condition occurs, the user will sustain, or will be *likely* to sustain, an injury of a severity that could result in loss of life, or result in significant bodily injury or loss of bodily function, either immediately or at some point in the future.

(2) *Major A:* A product hazard, other than *Critical* that is likely to result in failure to the degree that the compliant product does not provide any protection or reduces protection, *and is not detectable to the user.* The phrase *reduced protection* means the failure of specific protective design(s) or feature(s) that results in degradation of protection in advance of reasonable life expectancy to the point that continued use of the product is *likely* to cause physical harm to the user, or where continued degradation could lead to IHLH conditions.

(3) *Major B:* A product hazard, other than *Critical* or *Major A,* that is likely to result in reduced protection and is detectable to the user. The phrase *reduced protection* means the failure of specific protective design(s) or feature(s) that results in degradation of protection in advance of reasonable life expectancy to the point that continued use of the product is *likely* to cause physical harm to the user, or where continued degradation could lead to IHLH conditions.

(4) *Minor:* A product hazard, other than *Critical, Major A,* or *Major B,* that is not likely to materially reduce the usability of the compliant product for its intended purpose or a product hazard that is a departure from the established applicable standard and has little bearing on the effective use or operation of the compliant product for its intended purpose.

Where the facts are conclusive, based on characteristics of the hazard classified as indicated previously, the certification organization should consider initiating the following corrective actions with the authorized and responsible parties:

(1) *Critical* product hazard characteristics: product recall

(2) *Major A* product hazard characteristics: product recall or safety alert, depending on the nature of the specific product hazard

(3) *Major B* product hazard characteristics: safety alert or no action, depending on the nature of the specific product hazard

(4) *Minor* product hazard characteristic: no action

Copyright National Fire Protection Association
Provided by IHS under license with NFPA
No reproduction or networking permitted without license from IHS
Not for Resale

Table A.4.3.4(a) Testing Structural Fire Fighting Garments

		Test Material or Component												Conditioning		
Test	Section Number	Garments	Com-posite	Outer Shell	Moisture Barrier	Thermal Barrier	Winter Liner	Labels	Other Materials	Thread	Seams	Hard-ware	Trim	Washing/ Drying[a]	Room Temp[b]	Convective Heat[c]
Flame resistance	8.2			X	X	X	X		X				X	X	X	
Heat/thermal resistance	8.6			X	X	X	X	X	X			X	X		X	
TPP	8.10		X												X	
Thread melting	8.11									X					X	
Tear resistance	8.12			X	X	X	X							X	X	
Seam strength	8.14										X			X		
Cleaning shrinkage resistance	8.25			X	X	X	X							X		
Water absorption resistance	8.26			X										X		
Water penetration resistance	8.27				X									X	X	X
Liquid penetration resistance	8.28				X						X			X	X	X
Viral penetration resistance	8.29				X						X			X	X	X
Corrosion resistance	8.30											X			X	
Total heat loss	8.34		X												X	
Label durability	8.42							X								
Trim retroreflectivity	8.46												X		X	X
Trim fluorescence	8.46												X		X	
Overall liquid penetration	8.48	X												X		
Breaking strength	8.50			X												
CCHR	8.51		X											X	X	
Light degradation resistance	8.52				X									X	X	X
DRD function	8.59	X														
DRD material strength	8.58								X		X					

[a]See 8.1.2.
[b]See 8.1.3.
[c]See 8.1.5.

Copyright National Fire Protection Association
Provided by IHS under license with NFPA
No reproduction or networking permitted without license from IHS
Not for Resale

Table A.4.3.4(b) Conditioning and Testing of Structural Fire Fighting Helmets

		Specimen Numbers					
Test	Section Number	Room Temperature[a]	Wet[b]	Low Temperature[c]	Radiant[d]	Convective Heat[e]	Washing/ Drying[f]
Helmet, faceshield, and goggle flame test	8.3	1					
Heat resistance	8.6	2					
Retention	8.35	1					
Suspension retention	8.36	1					
Shell retention	8.44	13					
Electrical resistance	8.31	4					
Faceshield, goggle luminous transmittance	8.45	6					
Faceshield, goggle impact resistance	8.17	3	4	9		13	
Top impact	8.15	3	4	9	7	11	
Label legibility	8.43	2	4	9	7		
Impact acceleration	8.16	5	6	10	8		
Penetration	8.19	3	4	9	14	12	
Faceshield, goggle lens abrasion resistance	8.23	8					
Hardware corrosion	8.30	3					
Trim retroreflectivity and fluorescence	8.46	X					
Thread heat resistance	8.11	X					
Ear cover, chin strap flame resistance	8.2	X					X
Ear cover, chin strap heat resistance	8.6	X					X
Ear cover TPP	8.10	X					

[a] See 8.1.3.
[b] See 8.1.7.
[c] See 8.1.4.
[d] See 8.1.6.
[e] See 8.1.5.
[f] See 8.1.2.

Table A.4.3.4(c) Testing Structural Fire Fighting Gloves

		Test Material or Component						Test Preconditioning				
Test	Section Number	Whole Glove	Glove Composite	Glove Gauntlet	Glove Wristlet	Thread	Hardware	Room Temp[a]	Washing/ Drying[b]	Convective Heat[c]	Wet[d]	Flex[e]
TPP	8.10		X	X	X			X	X			
Heat and thermal shrinkage resistance	8.6	X						X	X			X
Conductive heat resistance test 1	8.7		X					X	X		X	
Flame resistance test 3	8.4		X	X	X			X	X			
Thread melting	8.11					X		X				
Viral penetration resistance	8.29		X					X	X	X		
Liquid penetration resistance	8.28		X					X	X	X		
Cut resistance	8.22		X	X	X			X	X			
Puncture resistance test 1	8.20		X					X			X	
Glove hand function	8.38	X						X				
Burst strength	8.13				X			X				
Seam breaking strength	8.14			X	X				X			
Overall liquid integrity test 1	8.33	X							X	X		
Glove donning test	8.37								X			
Liner retention test	8.63	X							X			
Label durability and legibility test 1	8.42	X						X		X		
Grip	8.39	X							X		X	
Corrosion resistance	8.30						X	X				

[a] See 8.1.3.
[b] See 8.1.2.
[c] See 8.1.5.
[d] See 8.1.8.
[e] See 8.1.10.

Copyright National Fire Protection Association
Provided by IHS under license with NFPA
No reproduction or networking permitted without license from IHS
Not for Resale

Table A.4.3.4(d) Testing Structural Fire Fighting Footwear

		Test Material or Component								Test Preconditioning		
Test	Section Number	Whole Footwear	Footwear Composite	Footwear Sole	Footwear Toe Section	Footwear Moisture Barrier	Footwear Moisture Barrier Seam	Thread	Labels	Room Temp[a]	Convective Heat[b]	Wet[c]
Radiant heat resistance test 1	8.9	X								X		X
Conductive heat resistance test 1	8.7	X								X		
Conductive heat resistance test 2	8.8	X								X		
Flame resistance test 4	8.5	X								X		
Thread melting test	8.11							X		X		
Liquid penetration resistance	8.28					X	X			X	X	
Viral penetration resistance	8.29					X	X			X	X	
Puncture resistance test 1	8.20	X	X							X		
Puncture resistance test 2	8.21			X						X		
Cut resistance	8.22		X							X		
Slip resistance	8.41	X								X		
Abrasion resistance	8.24			X						X		
Electrical insulation test 2	8.32	X								X		
Impact and compression	8.18				X					X		
Ladder shank bend	8.40	X								X		
Eyelet and stud post attachment	8.49	X								X		
Corrosion resistance	8.30	X								X		
Label durability and legibility	8.42								X	X	X	
Overall liquid integrity test 2	8.71	X								X		
Heat and thermal shrinkage resistance test	8.6	X								X		
Puncture resistance device flex test	8.21	X								X		

[a] See 8.1.3.
[b] See 8.1.5.
[c] See 8.1.9.

Table A.4.3.4(e) Testing Structural Fire Fighting Interfaces

		Test Material or Component							Conditioning	
Test	Section Number	Hood	Hood Material or Composite	Hood Seam	Hood Thread	Wristlet Material or Composite	Wristlet Seam	Wristlet Thread	Washing/ Drying[a]	Room Temperature[b]
Flame resistance	8.2		X			X			X	X
Heat/thermal resistance	8.6	X				X			X	X
TPP	8.1		X			X			X	X
Thread melting	8.11				X			X		X
Burst strength	8.13		X			X				X
Seam strength	8.14			X			X			X
Cleaning shrinkage	8.25	X				X			X	

[a] See 8.1.2.
[b] See 8.1.3.

--`,,```,,,,````-`-`,,`,,`,`,,`---
Copyright National Fire Protection Association
Provided by IHS under license with NFPA
No reproduction or networking permitted without license from IHS
Not for Resale

Table A.4.3.4(f) Testing Proximity Fire Fighting Garments

		Test Material or Composite												Conditioning		
Test	Section Number	Garments	Com-posite	Outer Shell	Moisture Barrier	Thermal Barrier	Winter Liner	Labels	Other Materials	Thread	Seams	Hard-ware	Trim	Washing/ Drying[a]	Room Temp[b]	Convective Heat[c]
Flame resistance	8.2			X	X	X	X		X				X	X	X	
Heat/thermal resistance	8.6			X	X	X	X	X	X			X	X		X	
TPP	8.10		X												X	
Thread melting	8.11									X					X	
Tear resistance	8.12			X	X	X	X							X	X	
Seam strength	8.14										X			X		
Cleaning shrinkage resistance	8.25			X	X	X	X							X		
Water absorption resistance	8.26			X										X		
Water penetration resistance	8.27				X									X	X	X
Liquid penetration resistance	8.28				X						X			X	X	X
Viral penetration resistance	8.29				X						X			X	X	X
Corrosion resistance	8.3											X			X	
Total heat loss	8.34		X												X	
Label durability	8.42							X								
Overall liquid penetration	8.48	X													X	
Breaking strength	8.50			X												
CCHR	8.51		X											X	X	
Light degradation resistance	8.62													X	X	X
DRD function test	8.59															
DRD material strength test	8.58															
Radiant heat resistance test 2	8.52			X											X	
Wet flex	8.54			X											X	
Adhesion after wet flex	8.55			X											X	
Flex at low temperature	8.56			X											X	
Resistance to high temperature blocking	8.57			X											X	

[a] See 8.1.2.
[b] See 8.1.3.
[c] See 8.1.5.

Copyright National Fire Protection Association
Provided by IHS under license with NFPA
No reproduction or networking permitted without license from IHS
Not for Resale

Table A.4.3.4(g) Conditioning and Testing of Proximity Fire Fighting Helmet

Test	Section Number	Specimen Numbers					
		Room Temperature[a]	Wet[b]	Low Temperature[c]	Radiant[d]	Convective Heat[e]	Washing/Drying[f]
Helmet, faceshield flame test	8.3	1					
Heat resistance	8.6	2					
Retention	8.35	1					
Suspension retention	8.36	1					
Shell retention	8.44	13					
Electrical resistance	8.31	4					
Faceshield luminous transmittance	8.45	6					
Faceshield impact resistance	8.17	3	4	9		13	
Faceshield radiant reflective test	8.52	15					
Top impact	8.15	3	4	9	7	11	
Label legibility	8.43	2	4	9	7		
Impact acceleration	8.16	5	6	10	8		
Penetration	8.19	3	4	9	14	12	
Radiant heat transmittance test	8.53	15					
Hardware corrosion	8.30	3					
Trim retroreflectivity	8.46	X					
Thread heat resistance	8.11	X					
Shroud, cover, chin strap flame resistance	8.2	X					X
Shroud, cover, chin strap heat resistance	8.6	X					X
Shroud TPP	8.10	X					
Shroud, cover radiant reflective test	8.52	X					
Shroud, cover wet flex	8.54						
test	8.55	X					
Shroud, cover flex at low temperature	8.56	X					
Shroud, cover high temperature blocking	8.57	X					
Shroud, cover tear resistance	8.12	X					X
Shroud, moisture barrier water penetration	8.27	X				X	X
Shroud, moisture barrier liquid penetration	8.28	X				X	X
Shroud, moisture barrier viral penetration	8.29	X				X	X

[a] See 8.1.3.
[b] See 8.1.7.
[c] See 8.1.4.
[d] See 8.1.6.
[e] See 8.1.5.
[f] See 8.1.2.

A.4.6.13 Reports, proposals, and proposed TIAs should be addressed to the technical committee that is responsible for the applicable standard and be sent in care of Standards Administration, NFPA, 1 Batterymarch Park, Quincy, MA 02169-7471.

A.5.1.1 Purchasers might wish to include a requirement in the purchase specifications for an additional label that includes certain information such as the date of manufacture, manufacturer's name, and garment identification number to be located in a protected location on the garment in order to reduce the chance of label degradation and as a backup source of information to aid in garment tracking or during an investigation.

A.5.1.3 See A.4.1.4.

A.5.4.4 A statement should be included in the user information advising that, upon the purchaser's request, the manufacturer is to furnish all documentation required by this standard and the test data showing compliance with this standard. A statement also should be included in the user information advising that, upon the purchaser's request, the manufacturer is to furnish a complete specification of all materials and components comprising each certified hood.

A.6.1 Purchasers of protective clothing should realize that fire fighters have to wear many items of protective clothing and equipment. Any interference by one item with the use of another might result in inefficient operations or unsafe situations. Chest

Copyright National Fire Protection Association
Provided by IHS under license with NFPA
No reproduction or networking permitted without license from IHS
Not for Resale

Table A.4.3.4(h) Testing Proximity Gloves

		Test Material or Component							Test Preconditioning				
Test	Section Number	Whole Glove	Glove Composite	Glove Outer Shell Material	Glove Gauntlet	Glove Wristlet	Thread	Hardware	Room Temp[a]	Washing/ Drying[b]	Convective Heat[c]	Wet[d]	Flex[e]
TPP	8.10		X		X	X			X	X			
Heat and thermal shrinkage resistance	8.6	X							X	X			X
Conductive heat resistance test 1	8.7		X						X	X		X	
Flame resistance test 3	8.4		X		X	X			X	X			
Thread melting	8.11						X		X				
Viral penetration resistance	8.29		X						X	X	X		
Liquid penetration resistance	8.28		X										
Cut resistance	8.22		X		X	X			X	X			
Puncture resistance test 1	8.20		X						X			X	
Glove hand function	8.38	X							X				
Burst strength	8.13					X			X				
Seam breaking strength	8.14				X	X				X			
Overall liquid integrity test 1	8.33	X								X	X		
Glove donning test	8.37	X								X			
Liner retention test	8.63	X								X			
Label durability and legibility test 1	8.42	X							X		X		
Radiant heat resistance test 2	8.52			X					X				
Wet flex	8.54			X					X				
Adhesion after wet flex	8.55			X					X				
Flex at low temperature	8.56			X					X				
Resistance to high temperature blocking	8.57			X					X				
Grip	8.39	X								X		X	
Corrosion resistance	8.30							X	X				

[a] See 8.1.3.
[b] See 8.1.2.
[c] See 8.1.5.
[d] See 8.1.8.
[e] See 8.1.10.

girth, sleeve length, and coat length should be required for protective coats; waist girth, inseam length, and crotch rise should be required for protective trousers; and chest girth, sleeve length, waist girth, outseam length from the underarm to the pant cuff, and trunk length from the base of neck to the crotch fold should be required for protective coveralls. Since manufacturers' patterns vary, measurement for sizing should be done by the manufacturer's representative or by a trained person in accordance with the manufacturer's instructions to ensure proper fit.

A.6.1.2 Purchasers might wish to specify additional reinforcement or padding in high-wear or load-bearing areas, such as pockets, cuffs, knees, elbows, and shoulders. Padding could include additional thermal barrier material meeting requirements as specified herein. Reinforcing material could include the outer shell material or leather. Purchasers are cautioned that additional weight caused by excessive reinforcement or padding could lead to fatigue or result in injury.

A.6.1.3 The fastener system should be specified by the purchaser. Fastener system methods can include, but are not limited to, the following:

(1) Entirely securing the thermal barrier and moisture barrier to a component part of the outer shell with snap fasteners or fastener tape
(2) Zipping the thermal barrier and moisture barrier to the outer shell
(3) Stitching the thermal barrier and moisture barrier into the coat in the neck and into the trouser in the waist area with snap fasteners or hook and pile fasteners securing the remainder
(4) Entirely stitching the thermal barrier and moisture barrier to the outer shell

It is strongly recommended that the thermal barrier and moisture barrier be detachable to facilitate cleaning the garments.

Copyright National Fire Protection Association
Provided by IHS under license with NFPA
No reproduction or networking permitted without license from IHS
Not for Resale

Table A.4.3.4(i) Testing Proximity Fire Fighting Footwear

		Test Material or Component								Test Preconditioning		
Test	Section Number	Whole Footwear	Footwear Composite	Footwear Sole	Footwear Toe Section	Footwear Moisture Barrier	Footwear Moisture Barrier Seam	Thread	Labels	Room Temp[a]	Convective Heat[b]	Wet[c]
Radiant heat resistance test 2	8.61	X								X		X
Conductive heat resistance test 3	8.60	X								X		
Conductive heat resistance test 2	8.8	X								X		
Flame resistance test 4	8.5	X								X		
Thread melting test	8.11							X		X		
Liquid penetration resistance	8.28					X	X			X	X	
Viral penetration resistance	8.29					X	X			X	X	
Puncture resistance test 1	8.20	X	X							X		
Puncture resistance test 2	8.21		X							X		
Cut resistance	8.22		X							X		
Slip resistance	8.41	X								X		
Abrasion resistance	8.24			X						X		
Electrical insulation test 2	8.32	X								X		
Impact and compression	8.18				X					X		
Ladder shank bend	8.40	X								X		
Eyelet and stud post attachment	8.49	X								X		
Corrosion resistance	8.30	X								X		
Label durability and legibility	8.42								X	X	X	
Overall liquid integrity test 2	8.71	X								X		
Heat and thermal shrinkage resistance test	8.6	X								X		
Puncture resistance device flex test	8.21	X								X		

[a] See 8.1.3.
[b] See 8.1.5.
[c] See 8.1.9.

Table A.4.3.4(j) Testing Proximity Fire Fighting Interfaces

		Test Material or Composite			Conditioning	
Test	Section Number	Wristlet Material or Composite	Wristlet Seams	Wristlet Thread	Washing/Drying[a]	Room Temperature[b]
Flame resistance	8.2	X			X	X
Thermal shrinkage resistance	8.6	X			X	X
Heat resistance	8.6	X			X	X
TPP	8.1	X				X
Thread melting	8.11			X		X
Burst strength	8.13	X			X	X
Seam strength	8.14		X		X	X
Cleaning shrinkage	8.25	X			X	

[a] See 8.1.2.
[b] See 8.1.3.

Copyright National Fire Protection Association
Provided by IHS under license with NFPA
No reproduction or networking permitted without license from IHS
Not for Resale

Table A.4.3.4(k) Optional CBRN Protective Ensemble Test Matrix

Test Material or Component*	MIST 8.66	Overall Liquid Penetration 8.48	Chemical Permeation Resistance 8.67	Burst Strength 8.13	Puncture Propagation Tear (PPT) Resistance 8.68	Cold Temperature Performance 8.69	Cut Resistance 8.22	Puncture Resistance 8.20	Abrasion Resistance 8.70
Overall ensemble	X	X							
CBRN barrier layer			X						
External CBRN barrier layer (garment)				X	X	X			
External CBRN barrier layer (glove)							X	X	
External CBRN barrier layer (footwear)							X	X	X

*Each ensemble element must meet the requirements for both ensemble and the respective ensemble as a prerequisite for applying the CBRN protection option.

A.6.1.8 Purchasers should specify pockets large enough to hold the items normally carried. Placement should allow for access to the pockets while wearing SCBA. Specifying ballooned pockets can increase capacity but could interfere with maneuverability. Ballooning only the back edges could minimize the maneuverability problem. Divided pockets as well as pockets for specific items such as SCBA facepieces and radios could be desirable.

A.6.1.9.2 Purchasers should consider specifying wristlets with a thumb hole or bartack creating a thumb hole for the wearer's thumb in order to ensure protection when arms are in the raised position.

A.6.1.11 Coat length is not addressed in this document as it must be determined by the individual donning both coat and trouser and proceeding through the directions contained in NFPA 1500, *Standard on Fire Department Occupational Safety and Health Program*, to ensure adequate overlap between the coat and trouser. Overlap is a significant safety issue and can be best addressed by careful overlap evaluation and ensuring only those coat/trouser combinations are worn that are recommended by the manufacturer of those ensemble items.

A.6.2.2 Users of protective clothing should be aware that reflective trims have varying durability under field use conditions. Trim can be damaged by heat, but still appear to be in good condition when it might have lost retroreflective properties. Trim can become soiled and lose fluorescing and retroreflective qualities. Trim can lose retroreflective qualities in rain or in fire fighting water exposures.

Trim should be checked periodically by using a flashlight to determine retroreflective performance. The trim should be bright. Samples of new trim can be obtained from the manufacturer for comparison, if necessary.

A.6.2.3 Use of vertical trim on the front of a protective coat has been shown to be capable of detrimentally affecting the performance of SCBA in high heat exposure conditions, such as flashover heat/flame conditions.

A basic minimum trim pattern has been established to eliminate CIL requirements and the requirements for minimum square inches for trim. It was decided to use minimum 325 $in.^2$ fluorescence on a size 40 coat and for all other coats to have trim established proportionately using a trim pattern instead of actual square-inch requirements.

It is recommended that the circumferential bands on the coat not be aligned. An irregular pattern of bands improves the conspicuousness of the user.

A.6.2.4 It is recommended that the trim on trousers be positioned at least 75 mm (3 in.) above the leg hem.

A.6.5.2 Many helmet designs expose the faceshield/goggle component(s) to abrasion, heat, flame, and particulate contamination. Purchasers might wish to specify a means of protecting the component(s). This could include, but not be limited to, faceshield/goggle components that retract inside the helmet, and coverings for the component(s) that are inherently resistant to the fire fighting environment. Fire departments should consider the health risks associated with contaminated goggles coming in direct contact with the wearer's face. Goggles do not have to be attached to the helmet.

A.6.7.7 The values contained in Table 6.7.6.1(a) through Table 6.7.6.1(e) are bare-hand dimensions, not glove pattern dimensions. Guidelines for applying these dimensions to flat glove patterns vary, depending on such factors as the type of pattern being used, the number of layers in the glove and the type of fit desired for the glove.

The values contained in Table 6.7.6.1(a) through Table 6.7.6.1(e) are those that apply to the five-size system intended to fit a population defined as the 5th percentile (female) through the 95th percentile (male) in the U.S. Army. These values are not valid if other than a five-size system is being used or if the demographics of the intended population vary.

Caution should be used in determining the specific value to be used in glove patterning from the given range of values for a particular dimension and glove size. The choice of the lowest, middle, or highest value is related to expectations of how the glove will fit.

A.6.16.2 See A.6.1.9.2.

A.7.1.15 Fire fighters can encounter many common liquids during the normal performance of their duties, such as doing fire fighting operations. The performance requirements of 7.1.15 should not be interpreted to mean that the protective garments are suitable or are permitted to be used for protection to the wearer during any hazardous materials operation. It is the intent of this standard to provide protection from intrusion

Copyright National Fire Protection Association
Provided by IHS under license with NFPA
No reproduction or networking permitted without license from IHS
Not for Resale

throughout the protective garment body by certain liquids, including some common chemicals.

A.7.7.8 Fire fighters can encounter biohazards during the normal performance of their duties, including rescue of victims from fires, extrication of victims from vehicles or other entrapment situations, provision of first responder or emergency medical care, or other rescue situations. It is the intent of this standard to provide protection from intrusion throughout the glove body by certain liquids, including some common chemicals and from blood-borne pathogens.

A.7.7.9 Fire fighters can encounter many common liquids during the normal performance of their duties, such as during structural fire fighting operations. The performance requirement of 7.7.9 should not be interpreted to mean that gloves for structural fire fighting are suitable or are permitted to be used for protection to the wearer during any hazardous materials operations. It is the intent of this standard to provide protection from intrusion throughout the glove body by certain common liquids and from blood-borne or other liquid-borne pathogens.

Water is also included as a liquid. The inclusion of water in the liquid penetration requirement satisfies essential safety criteria for structural fire fighter gloves. The glove requirements are largely based on the work of G. C. Coletta, I. J. Arons, L. Ashley, and A. Drennan in NIOSH 77-134-A, *The Development of Criteria for Firefighters' Gloves,* and Arthur D. Little in NIOSH 77-134-B, *Glove Requirements.* This NIOSH report is the landmark study in this field and the merits of its testimony should not be underestimated. It subsequently has been validated by the work of NASA, Project FIRES, the International Association of Fire Fighters, and reports by the fire service. The study identified a set of qualitative and quantitative criteria for fire fighter gloves. Those criteria form the basis from which recommendations were made for both new glove standards and a prototype glove system that met those standards. The NIOSH survey of hand and wrist injury statistics and fire fighter's task-oriented needs provided the most in-depth identification of structural fire fighter glove requirements to date. That study identified the following critical performance needs:

(1) Resistance to cut
(2) Resistance to puncture
(3) Resistance to heat penetration (radiant and conductive)
(4) Resistance to wet heat penetration (scald-type injury)
(5) Resistance to cold
    (a) Dry
    (b) Wet
(6) Resistance to electricity
(7) Dexterity
(8) Resistance to liquids
    (a) Penetration
    (b) Retention
    (c) Material degradation
(9) Comfort
    (a) Cold and heat
    (b) Absorbency
    (c) Weight
    (d) Stiffness
    (e) Fit
(10) Resistance to flame
(11) Durability
(12) Drying
(13) Visibility

Thus, NIOSH developed a comprehensive list of all the design and performance parameters required by fire service gloves. This list addressed documented hazards encountered by structural fire fighters and it served as the foundation for the development of the first and all subsequent editions of the former glove standard, NFPA 1973, *Standard on Gloves for Structural Fire Fighting,* as well as this standard. The following outlines how closely the NIOSH committee has followed the NIOSH guide for design criteria, performance criteria, and test methods for fire fighter gloves.

Critical performance needs as addressed in NFPA 1971 are as follows:

(1) Resistance to cut: 7.7.11
(2) Resistance to puncture: 7.7.12
(3) Resistance to heat penetration: 7.7.5, conductive heat resistance; and 7.7.1, thermal protective performance
(4) Resistance to wet heat penetration: 7.7.5, conductive heat resistance; 7.7.1, thermal protective performance; and 7.7.9, liquid penetration resistance (as recommended by the NIOSH study)
(5) Resistance to cold: 7.7.9, liquid penetration resistance (as recommended by the NIOSH study)
(6) Resistance to electricity: These criteria were not addressed, as the committee decided that it could convey that the glove was suitable for live electrical use
(7) Dexterity: 7.7.13
(8) Resistance to liquids: 7.7.9 (as recommended by the NIOSH study)
(9) Comfort: 7.7.13, dexterity; and 6.7.6, sizing
(10) Resistance to flame: 7.7.6
(11) Durability: No performance requirements, but durability is addressed in Section 5.4 as part of manufacturer's instructions
(12) Drying: No performance requirements, but drying is addressed in Section 5.4 as part of manufacturer's instructions
(13) Visibility: No requirements, but visibility is addressed in other protective clothing standards

This NIOSH comprehensive listing of all the design and performance parameters required by fire service gloves shows that the water portion of the liquid penetration resistance performance requirement is an integral component for satisfying the following three protective criteria:

(1) Wet heat resistance
(2) Liquid resistance
(3) Cold resistance

The NIOSH study relied on the water penetration requirement to ensure a minimum level of protection in otherwise untested areas and the committee agrees with the NIOSH study. In defense of this requirement, the NIOSH committee has provided the following expanded justifications for each of these three criteria.

Wet Heat Resistance. The wet heat resistance concept encompasses at least the following five types of combined thermal/wet exposures:

(1) Radiant energy on a wet glove
(2) Conductive heat transfer to a wet glove
(3) Wetting of an already heated glove
(4) Steam jet exposure, such as from a broken steam line
(5) Saturated water–vapor atmosphere, such as from scalding water/steam from the hose nozzle during fire fighting operations

Copyright National Fire Protection Association
Provided by IHS under license with NFPA
No reproduction or networking permitted without license from IHS
Not for Resale

The NIOSH committee addressed the first two types of exposure in 7.7.1 and 7.7.5 (TPP and conductive heat testing) with wet gloves. The last three types of exposures are addressed in 7.7.9 (the water portion of the liquid penetration resistance requirement).

No tests other than those for water penetration have been included in the standard to simulate the last three kinds of exposures. This is because the NFPA committee has relied on the documentation of NIOSH and D. L. Simms and P. L. Hinkley, Part 10, *The Effect of Water on Clothing, Suitable for Clothing Aircraft Fire Crash Rescue Workers* (an early study on the interactive effect of heat and water on thermal transfer in protective clothing), to show that the water penetration requirement satisfies those needs.

The NIOSH study states the following: "Fire fighters' gloves should protect against scald-type injury by meeting the criteria for both resistance to heat penetration and to liquid penetration."

The Simms study states the following: "A sudden rise in temperature sufficient to produce a scald did not occur at all if a moistureproof layer was included in the clothing."

The Simms study concludes that, in the absence of continuous wetting throughout the exposure period, the assemblies with moisture barriers provided more protection and were "recommended." In assemblies without moisture barriers, the wetting of the hot/dry materials caused a sudden rise of temperature and severe scalds, and these assemblies should be "avoided."

The Committee believes that the liquid penetration resistance test for water is the best available technique for evaluating a glove's ability to resist these three wet heat assaults until more sophisticated techniques are developed. To the committee's knowledge, no other appropriate procedures for testing these criteria are currently available. The previous literature citations document the liquid penetration resistance test for water as being appropriate and field experience confirms it to be adequate for protection of the fire fighter.

Liquid Resistance. As noted by NIOSH, the liquid resistance concept encompasses three kinds of hazards: liquid penetration, liquid retention, and material degradation. Gloves not meeting the liquid penetration resistance requirement for water produce burn injuries quickly when assaulted by hot or boiling water. The liquid penetration resistance test for water directly evaluates whether water can penetrate through the glove materials. Furthermore, according to NIOSH, if liquid penetration resistance is not required, a fire fighter more readily encounters a wet glove/wet hand situation. This combination reduces working efficiency by degrading a fire fighter's manipulative and gripping abilities. These requirements have been addressed in 7.7.13 and 7.9.2 (dexterity and grip). However, the dexterity and grip testing that is specified necessitates the use of a testing subject and is done only at room temperature and not in conditions of extreme heat or cold. Including a liquid penetration resistance requirement for the glove limits the negative impact that these conditions can have on dexterity and grip.

Liquid retention (i.e., a glove's tendency to soak up liquids) can be hazardous, since it influences both comfort and function. The committee relied on both 7.7.9 (liquid penetration resistance) and 7.7.13 (dexterity) to satisfy this criterion.

Cold Resistance. In addressing the resistance to cold, the NIOSH study states the following: "Fire fighter's gloves used in winter conditions should be constructed with enough insulation to keep the skin above 18°C (65°F) during nonsedentary exposures to ambient temperature of 34°C (30°F). Gloves should meet the criteria for resistance to liquid penetration as an integral part of these criteria."

Because fire fighting gloves have to be insulative to high heat exposures, they normally are effectively insulative to cold exposures as well. As a result, no separate cold insulation requirements are included in the standard. Gloves also have to be similarly insulative under cold/wet exposures. In lieu of an insulative test, the cold/wet condition has been addressed by 7.7.9 (liquid penetration resistance). All the data and experience available to the committee shows that drier insulation is more insulative than wetter insulation under cold exposures.

The Committee believes that resistance to cold is a safety issue since, if it is not adequately provided for in the glove, it can lead to cold burn (frostbite) injuries. A lack of resistance to cold also can degrade grip and manipulative performance. Almost every area of the country can experience freezing conditions, although in some southern locales it is not a frequent event. Fire fighters, however, can experience cold exposures from sources other than weather, such as cold storage occupancies. The committee believes it is not necessary to differentiate performance for different areas of the country for any personal protective equipment.

A number of technical papers have been published over the past 50 years that established the following facts:

(1) The insulative value of clothing can be quantitatively measured in clo units.
(2) Moisture in clothing insulation reduces the clo value of protective clothing.
(3) Compression of clothing reduces the clo value of clothing.
(4) Manual dexterity is reduced as the ambient temperature decreases from 18°C to 29°C (65°F to 20°F).
(5) Moisture in clothing accelerates the loss of heat from the hand.
(6) Manual dexterity begins to degrade as hand skin temperature decreases below 18°C (65°F).

Points (1) through (6) show the deleterious effect of water in gloves on manual dexterity and protection, especially in cold exposures.

In summary, the liquid penetration resistance requirement and test for water is the most appropriate test available to measure water penetration resistance in a glove. It is the only currently available method for providing resistance to several kinds of wet heat exposures. Furthermore, it also addresses the necessity for a glove to resist cold/wet exposures, to be dexterous during cold/wet exposures, and to be resistant to excessive absorption of and deterioration by water. Without the liquid penetration resistance requirement for water, a fire fighter would have no protection from hot/cold water, which can produce scald and frostbite injuries, respectively. Without the liquid penetration resistance requirement for water, the standard would fail to address the resistance to wetting of an already heated glove, steam jets, saturated water–vapor atmospheres, and insulation against cold/wet exposures.

A.7.7.13 The glove hand function test referenced in the body of the standard can be supplemented by the following:

(1) Exploration of dexterity tests for all sizes or, since it is typically a greater challenge, exploration of dexterity testing on the extra-small sizes
(2) Exploration of glove interface with other fire fighting vocational tools used by the purchaser
(3) Wear-testing the gloves being considered with particular attention to use on toggles, switches, and knobs

Copyright National Fire Protection Association
Provided by IHS under license with NFPA
No reproduction or networking permitted without license from IHS
Not for Resale

A.7.7.16 It is the intent of this standard to provide protection from intrusion throughout the glove body by certain common liquids and from blood-borne pathogens. The performance and testing requirements for glove composite materials for liquid penetration are found in 7.7.9 and Section 8.28, respectively, and the performance and testing requirements for glove composite materials for biopenetration are found in 7.7.8 and Section 8.29, respectively. The whole glove performance and testing requirements of 7.7.16 and Section 8.33 use water as a convenient and repeatable medium for evaluating whole glove integrity, since the provisions of Sections 8.28 and 8.29 only allow for testing of glove composites and not the entire glove. A precedent exists in NFPA 1992, *Standard on Liquid Splash-Protective Ensembles and Clothing for Hazardous Materials Emergencies*, where water is used to test the integrity of the entire protective suit.

A.7.7.17 The glove donning performance requirement is intended to evaluate the overall design of the glove for repeated use. Many factors can affect the performance, including proper sizing, glove interior design, wrist opening configuration, lining material selection, liner pullout, and integrity of the assembly. The time limits of this test are not necessarily indicative of field use. In particular, purchasers might wish to comparatively test wet (as well as dry) don/doff characteristics before making a final purchase decision.

A.7.10.9 Footwear sole slip resistance measured in wet conditions is conducted with water and is not to be construed as providing the same degree of protection from other wet substances.

A.7.10.11 Fire department personnel should be warned that the electrical hazard-resistant protective properties in new, unworn structural fire fighter boots as required by this standard will diminish or be eliminated as the boot and the soles/heels wear or if they are punctured or cut.

A.7.20.1.1 The minimum local physiological protective dosage factor is based on the NIOSH conditions used for CBRN SCBA (i.e., 300 $mg/m^3 \times 30$ min = 9000 $mg/min/m^3$) in evaluating the permeation of the blister agent, distilled mustard (HD). This maximum exposure concentration is divided by the onset of symptoms exposure dosage (OSED), which is set at an exposure concentration (ECt_{10}) value that causes threshold mustard effects of blistering and ulceration in 10 percent of the population. Since blister agent effects vary with the body location, different values of the onset of symptoms exposure dosage are used for each body location (which vary from 25 to 100 $mg/min/m^3$). The reported value for local physiological protective dosage factor is normalized at each location so that each local physiological protective dosage factor is compared on the same basis. The systemic physiological protective dosage factor is based on NIOSH conditions used for CBRN SCBA (i.e., 2000 $mg/m^3 \times 30$ min = 60,000 $mg.min/m^3$) in evaluating the permeation of the nerve agent, sarin (GB), where the soman (GD) concentration is assumed to be equivalent to the GB concentration specified in the standard. The onset of symptoms exposure dosage $OSED_{sys}$ used to calculate the minimum systemic physiological protective dosage factor for GD is 166 $mg/min/m^3$ (Grotte, J. H. and Yang, L. I., "Report of the Workshop on Chemical Agent Toxicity for Acute Effects," IDA Document D-2176, Institute for Defense Analysis, Alexandria, VA, May 1998). This value is the dosage of GD that produces threshold effects of twitching and localized sweating for 10 percent of the population (ECt_{10}).

A.8.1.6.8 A radiant heat test for helmets is specified. Under controlled conditions, a radiant heat load of 1 W/cm^2 is applied until a temperature of 260°C (500°F) is reached on a transducer. This temperature alone does not simulate actual field conditions but is a test devised to put extreme heat loads on helmets in an accurate and reproducible manner by testing laboratories. However, the radiant heat load of 1 W/cm^2 was selected as an average value based on studies of fire conditions that relate to field use.

A.8.10 The TPP test method described in Section 8.10 is intended for the measurement of structural fire fighting protective ensemble elements and proximity fire fighting protective ensemble elements including garment composites, hoods, shrouds, ear covers, and gloves.

A.8.10.1.1 The specimen mounting configuration in this test that positions the specimen in contact with the sensor is not recommended for station/work uniforms, wildland fire fighting protective clothing, or industrial protective clothing.

A.8.11.4.1 Apparatus of the type described in this method may be obtained from:

(1) The Fisher Scientific Company, 711 Forbes Avenue, Pittsburgh, PA 15219, and is known as the Fisher-Johns Melting Point apparatus
(2) Thomas Scientific, P.O. Box 99, Swedesboro, NJ 08085

A.8.11.4.3(2) Six standards for use in calibrating melting point apparatus may be obtained from the U.S. Pharmacopoeia reference standards, 46 Park Avenue, New York, NY 10016.

A.8.15.4.9 *Equipment Guidelines.* The instrumentation should be allowed to warm up until it stabilizes. No simple means exists to calibrate the impact system required by this standard. Nevertheless, calibration is necessary. The equipment should be checked for repeatability before and after each series of tests by impacting a standardized elastomeric shock pad. A minimum of three such impacts are recorded before and after testing. If the post-test average readings of the three impacts differs from the pre-test average by more than 5 percent, the entire test series is discarded.

The impact tester should have a guide rail at least 3 m in height and capable of producing impact velocities required by this standard. Test anvils, headforms, transducers, etc., mounted to the base should be attached so that no energy is absorbed through deflections and the base should be at least 25 mm (1.0 in.) thick steel. Guide mechanisms that slide on the rail should have recirculating ball bearings to minimize friction. The impactor guide mechanism should contain an automatic brake to prevent second impacts (bounding). A velocity detector is required to assure proper drop heights. The position of said detector should be adjustable so that the speed of impact is measured no more than 20 mm (0.79 in.) from the point of impact. A detector flat attached to the guide mechanism that passes through or by the detector should not be greater than 26 mm (1.02 in.) height. The detector should be capable of resolving velocities of 0.01 millisecond increments. Magnetic detector systems may also be used if equivalency is established. An electronic timer is used to determine the speed at which the flag traverses the detector. The load cell should conform to the following characteristics:

(1) Size: 75 mm diameter (3.0 in.) min
(2) Measuring Range: 0–5000 N (0–1124 lbf) min
(3) Resolution: 45 N (10.1 lbf) max
(4) Accuracy, Linearity: ±2.5% full-scale max
(5) Rigidity: 4.5×10^7 N/m (2.6×10^7 lbf/in) min
(6) Transverse Sensitivity: 3.0% max

Copyright National Fire Protection Association
Provided by IHS under license with NFPA
No reproduction or networking permitted without license from IHS
Not for Resale

The load cell/headform mounting system should not have a resonant frequency less than 5 kHz, and the frequency response of the system should be in compliance with SAE Recommended Practice J211b, *Channel Class 1000*.

It is recommended that the load cell output be recorded with a storage oscilloscope, transient recorder, or similar device designed to store maximum readings. However, maximum for readings may be obtained using a peak indicating meter designed to store only a maximum reading. The frequency response of peak indicating meters should at least meet the requirements of SAE Recommended Practice J211b, *Channel Class 1000*. Resolution should be 45 N (10.1 lbf) max with rise time capability less than 0.01 milliseconds.

Calibration. Strain gauge type load cells can generally be calibrated statically by applying a known dead weight to the top of the load cell and checking the output signal. This works well with an oscilloscope or voltmeter. However, transient vibrations tend to create a problem when using peak indicating meters, and thus the load must be applied and/or removed with extreme care. Furthermore, static calibration does not take into account the dynamic response of the measuring system. Dynamic calibration is recommended but requires a calibrated reference accelerometer and a calibrating medium (shock pad). The reference accelerometer should have the following characteristics:

(1) Measuring Range: 0–400 Gs min
(2) Resolution: 1.0 G max
(3) Accuracy, Linearity: 1.0% full-scale max
(4) Transverse Sensitivity 3.0% max
(5) Resonant Frequency: 20 kHz min
(6) Frequency Response: ±0.5 db @ 0.1 hz–2.0 kHz
(7) Repeatability/Stability: 1.0% full-scale max

The calibrating medium should have the following characteristics:

(1) Material: Elastomer (high resilience and low hysteresis)
(2) Durometer: 50–60 Shore A
(3) Thickness: 25 mm (1.0 in.) min
(4) Size: 100 m (4.0 in.) diameter min

The accelerometer is mounted on top of the 3.6 kg (8.0 lb) impactor along its vertical axis (±2.5 degrees of true vertical) according to the manufacturer's instructions. A dual channel storage oscilloscope is recommended for making simultaneous records of both accelerometer and load cell outputs. Both accelerometer and oscilloscope should be in recent calibration.

Force Measuring System Calibration Procedure. Remove headform from load cell and mount the calibrating medium to the top of the load cell. All electronic systems should be turned on and allow to stabilize. The impactor, with accelerometer attached, should be dropped onto the calibrating medium from a height which yields a maximum acceleration reading of 100 Gs ±10 Gs. Outputs of both accelerometer and load cell should be recorded. The two maximum values should read within 2.5 percent of each other according to $F=MA$ (Force = Mass × Acceleration). This degree of accuracy must be repeatable throughout at least five impacts.

Velocity Measuring System Calibration Procedure. If a simulated detector flat (ball) cannot be dropped in "free fall" from a known height through or by the detector, the velocity measuring system should be returned to the manufacturer at least every 6 months for recalibration. Otherwise, a ball of known diameter can be dropped from a known height to trigger the velocity detector. The ball must be large enough to properly trigger the detector and have enough mass to negate the effects of aerodynamic friction. The ball should be dropped from at least 1 m. The actual velocity is then calculated from:

$$V = \sqrt{2\,gh}$$

where:
g = gravitational constant
h = drop height

This value is then compared to the measured velocity. Both values should agree within 1.0 percent.

System Repeatability Procedure. With the calibrating medium (shock pad) described above mounted to the top of the load cell, three consecutive drops of the impactor onto the medium should be made. The velocity of impact should be maintained at 4.0 m/sec, ±0.03 m/sec (13.1 ft/sec, ± 0.1 ft/sec). The repeatability value should be the average of the three maximum transmitted force readings. However, the total range for the three values should not exceed ±3.0 percent of the average value.

A.8.16.4.9 The instrumentation should be allowed to warm up until it sterilizes. No simple means exists to calibrate the impact system required by this standard. Nevertheless, calibration is necessary.

The equipment should be checked for repeatability before and after each series of tests by impacting a standardized elastomeric shock pad as specified in A.8.15.4.9. A minimum of three such impacts should be recorded before and after testing. If the post-test average readings of the three impacts differs from the pre-test average by more than 5 percent, the entire test series is discarded.

The impact tester should have a guide rail at least 2.0 m (6.6 ft) in height to produce impact velocities required for this standard. The flat test anvil should be made to be interchangeable on the base and be attached so that no energy is absorbed through deflections and the base should be at least 25 mm (1 in.) thick steel. Guide mechanisms that slide on the rail should have recirculating ball bearings to minimize friction. A velocity detector is required to assure proper drop heights. The position of said detector should be adjustable so that the speed of impact is measured no more than 20 mm (0.79 in.) from the point of impact. A detector flag attached to the guide mechanism that passes through or by the detector should not be greater than 25 mm (1 in.) in height. The detector should be capable of having a resolution no greater than 0.01 milliseconds. The photo beam, visible, infrared, etc., should have emitter/receiver slots no greater than 0.05 mm (0.002 in.) running normal to the path of travel of the flag. Magnetic detector systems may also be used if equivalency is established. An electronic timer is used to determine the speed at which the flag traverses the detector. Attached to the guide mechanism, in such a way as to prevent rotation, should be a mounting ball. Test headforms are mounted on said ball with a clamping ring such that the headforms may be swiveled about the ball. An accelerometer should be mounted inside the ball, having its axis (or the vertical axes, in the case of a triaxial accelerometer) within 2.5 degrees of vertical alignment.

The accelerometer should conform to the following characteristics:

(1) Shape: Cubic, with flat sides
(2) Size: 25 mm (1.0 in.) max dimensions
(3) Measuring range: 0–500 Gs min
(4) Resolution: 1.0 G max
(5) Accuracy, linearity: 1.0% full-scale max

Copyright National Fire Protection Association
Provided by IHS under license with NFPA
No reproduction or networking permitted without license from IHS
Not for Resale

(6) Transverse sensitivity: 5.0% max
(7) Resonant frequency: 20 kHz min
(8) Frequency response: ±5 db @ 0.1 Hz–2 kHz
(9) Repeatability/stability: 1.0% full-scale max

The frequency response of the system should be in compliance with SAE Recommended Practice J211b, *Channel Class 1000*. Each channel resolution should be 1.0 G max with rise time capability less than 0.01 milliseconds.

Calibration. While there are several acceptable method of accelerometer calibration, one method may be performed using the fixture specified in A.8.15.4.9 for dynamic calibration. In this case, however, the calibrated reference accelerometer and the test accelerometer should be fixed in "piggyback" fashion, one on top of the other. The cubic shaped test accelerometer lends itself well to this procedure. The axis should be in vertical alignment with the axis of the reference accelerometer and the vertical axis of the impactor. Practice has demonstrated that thin, "double stick" tape can be used to fixture the accelerometers one on top of the other. This assumes that the flat surface of the accelerometers in contact with the tape is at least 50 mm^2 (2.0 $in.^2$) and that the cables are properly tied down and held in place.

Acceleration Measuring Procedure. Remove the test accelerometer from the mounting ball. Mount this unit on the impactor then mount the calibrated reference accelerometer on top of the test accelerometer. Mount the calibrating medium as specified in A.8.15.4.9. All electronic systems should be tuned on and allowed to stabilize. The impactor, with accelerometers attached, should be dropped onto the calibrating medium from a height that yields a maximum acceleration, as indicated by the reference accelerometer of 200 G, ± 20G. The vertical axis outputs of both accelerometers should be recorded. The two maximum values should read within 2 percent of each other. This degree of accuracy should be repeatable through at least five impacts.

Velocity Measuring System Calibration Procedure. For checking the calibration of velocity detectors, see A.8.15.4.9.

System Repeatability Procedure. Mount the calibrating medium (shock pad) described in A.8.15.4.9 onto the test based in place of the test anvil(s). Position the headform inverted, with the basic plane horizontal. With the accelerometer connected to the recording/computing instrumentation, three consecutive drops of the headform onto the medium should be made. The velocity of the impact should be maintained at 3.0 m/sec, ±0.03 m/sec (9.8 ft/sec, ±0.1 ft/sec). For each drop a maximum G value should be recorded. The repeatability value should be the average of the three measurements. However, the total range for all three values should not exceed ±8.05 of the average value.

A.8.17.4.1.3 This prevents missile tumble, helps to protect the operator if the tube extends to within a short distance of the device being tested, and allows the exact space necessary for insertion of the missile at the top. Partial shielding of the headform might be advisable to protect the operator's feet.

A.8.17.5.1.1 The steel balls move at dangerous speeds, and other forms of safety devices, such as interlocks and palm switches, might be desirable in a particular setup.

A.8.33.4.1 An example of an inner glove fabric is a lightweight, tightly woven medium- or dark-colored, 100-percent polyester fabric without surface treatment.

A.8.34 Copies of an IAFF report can be obtained from the International Association of Fire Fighters Department of Health and Safety, 1750 New York Avenue, NW, Washington, DC 20006.

Copies of an NFPRF report can be obtained from the National Fire Protection Research Foundation, 1 Batterymarch Park, Quincy, MA 02269–7471.

A.8.45.5 The Gardner pivotal sphere haze meter is described in ASTM D 1003, *Standard Test Method for Haze and Luminous Transmittance of Transparent Plastics*.

A.8.48.5(2) A heavy, flat metal plate with two upright threaded posts, large slotted metal bar, and heavy-duty metal bolts is a preferred means for mounting the mannequin in the spray chamber to prevent any effects of the mannequin mounting on the clothing specimen.

A.8.48.7 The authority having jurisdiction can request a diagnosis of the mechanism of failure.

A.8.62.5.2 A readily available white cardstock material of 1.29 mm (0.05 in.) thickness is suitable for use as a backing material to keep the material flat and unaffected by the air currents created in the test apparatus.

A.8.66.3.3 SCBA and some styles of footwear are likely to acceptable after washing and 3 weeks in a ventilated space. Some items such as gloves and garments might not be easily decontaminated.

A.8.66.6.1 Examples of suitable analytical techniques include gas chromatography with thermal desorption of the adsorbent in the PAD, and high performance liquid chromatography with methanol extraction of the adsorbent in the PAD.

A.8.66.7.2.1 These values are based on an analysis of the chamber data of Gorrill and Heinen presented in AEP-52 broken down by body region and are the ECt_{10} values for severe erythema/blistering/desquamation. They include data for hot/humid exposures, where volunteers wore clothing covering almost everything but hands/neck, and clothing was not necessarily removed immediately after exposure. Clothing is assumed to provide a PF of 2.

Annex B Informational References

B.1 Referenced Publications. The documents or portions thereof listed in this annex are referenced within the informational sections of this standard and are not part of the requirements of this document unless also listed in Chapter 2 for other reasons.

B.1.1 NFPA Publications. National Fire Protection Association, 1 Batterymarch Park, Quincy, MA 02169-7471.

NFPA 1500, *Standard on Fire Department Occupational Safety and Health Program*, 2007 edition.

NFPA 1973, *Standard on Gloves for Structural Fire Fighting*, 1983 edition.

NFPA 1973, *Standard on Gloves for Structural Fire Fighting*, 1988 edition.

NFPA 1973, *Standard on Gloves for Structural Fire Fighting*, 1993 edition.

NFPA 1992, *Standard on Liquid Splash-Protective Ensembles and Clothing for Hazardous Materials Emergencies*, 2005 edition.

Copyright National Fire Protection Association
Provided by IHS under license with NFPA
No reproduction or networking permitted without license from IHS
Not for Resale

B.1.2 Other Publications.

B.1.2.1 ASTM Publications. ASTM International, 100 Barr Harbor Drive, P.O. Box C700, West Conshohocken, PA 19428-2959.

ASTM D 1003, *Standard Test Method for Haze and Luminous Transmittance of Transparent Plastics*, 2000.

B.1.2.2 NIOSH Publications. National Institute for Occupational Safety and Health, Centers for Disease Control and Prevention, 1600 Clifton Road, Atlanta, GA 30333.

NIOSH 77-134-A, *The Development of Criteria for Firefighters' Gloves*, vol. 1, 1976.

NIOSH 77-134-B, *Glove Requirements*, vol. 2, 1976.

B.1.2.3 SAE Publications. Society of Automotive Engineers, 400 Commonwealth Drive, Warrendale, PA 15096.

SAE Recommended Practice J211b, *Channel Class* 1000.

B.1.2.4 U.S. Government Publications. U.S. Government Printing Office, Washington, DC 20402.

Title 29, Code of Federal Regulations, Part 7, Subpart C, 1 April 1997.

Title 42, Code of Federal Regulations, Part 84, Subpart E.

B.1.2.5 U.S. Military Publications. U.S. Army Developmental Test Command (DTC), ATTN: CSTE-DTC-TT-S, Aberdeen Proving Ground, MD 21005–5055.

Assessment of the U.S. Army Chemical and Biological Defense Command Report 1, "Technical Assessment of the Man-In-Simulant Test (MIST) Program," National Research Council Report, 1997.

NATO Document No. 1268015, AEP-52, "Assessment of the Effect Levels of Classical Chemical Warfare Agents Applied to the Skin to be Used in the Design of Protective Equipment," 2003.

The Technical Cooperation Program, Chemical Biological Defence Technical Panel 11 on Low Burden, Integrated Protective Clothing, "Final Report: Development of a Standard Vapour Systems Test to Assess the Protection Capability of NBC Individual Protective Ensembles," Appendix G, Defence Research Establishment Suffield Report, April 1997, Unclassified.

B.1.2.6 Other Publications.

Simms, D. L. and P. L. Hinkley, Part 10, *The Effect of Water on Clothing, Suitable for Clothing Aircraft Fire Crash Rescue Workers*, F. R. Note 366, Fire Research Station, Boreham Wood, Herts, England, 1959.

Grotte, J. H. and Yang, L. I., "Report of the Workshop on Chemical Agent Toxicity for Acute Effects," IDA Document D-2176, Institute for Defense Analysis, Alexandria, VA, May 1998

B.2 Informational References. (Reserved)

B.3 References for Extracts in Informational Sections. (Reserved)

Copyright National Fire Protection Association
Provided by IHS under license with NFPA
No reproduction or networking permitted without license from IHS
Not for Resale

Index

Copyright © 2006 National Fire Protection Association. All Rights Reserved.

The copyright in this index is separate and distinct from the copyright in the document that it indexes. The licensing provisions set forth for the document are not applicable to this index. This index may not be reproduced in whole or in part by any means without the express written permission of NFPA.

-A-

Abrasion durability test (labels) 8.42.4.2
Abrasion resistance test (footwear) 7.10.10, 8.24
Test 2 ..... 7.20.13.4, 8.70
Acceleration, impact resistance test (helmets) 7.4.2, 8.16, A.8.16.4.9
Accessories 1.1.5, A.1.1.5
Adhesion after wet flex-tape test 7.3.4, 7.6.5, 7.6.17, 7.9.4, 8.55
Application of standard 1.3, A.1.3.2, A.1.3.8
Approved (definition) 3.2.1, A.3.2.1
Arch (definition) 3.3.1
Authority having jurisdiction (definition) 3.2.2, A.3.2.2

-B-

Barrier material (definition) ..... 3.3.2; *see also* CBRN barrier layer; Moisture barriers; Thermal barriers
Basic plane (definition) 3.3.3
Biological terrorism agents ..... A.3.3.15; *see also* Viral penetration resistance test
Definition 3.3.4
Bitragion coronal arc (definition) 3.3.5, A.3.3.5
Bitragion inion arc (definition) 3.3.6, A.3.3.6
Blocking, resistance to high-temperature, test 7.3.6, 7.6.7, 7.6.19, 7.9.6, 8.57
Body fluid–borne pathogen (definition) ..... 3.3.7; *see also* Liquid integrity test; Viral penetration resistance test
Body fluids (definition) ..... 3.3.8; *see also* Liquid integrity test; Viral penetration resistance test
Booties
Definition 3.3.9
Design requirements 6.1.10.1, 6.1.10.2, 6.10.2.1, 6.10.2.2
Liquid penetration, resistance to 8.27.1.1, 8.28.1.1, 8.29.1.1, 8.29.1.2, 8.48.1.1, 8.48.1.3, 8.48.9
Shrinkage, resistance to 8.25.1.1
Strength 8.14.1.1
Breaking strength test 7.1.19, 7.14.9, 8.14, 8.50
Brim 6.6.4
Definition 3.3.10
Brim line ..... 7.4.4(8)
Definition 3.3.11
Burst strength test 7.7.14, 7.14.8, 7.16.7, 8.13

-C-

Calibration procedures 8.16.4.9, 8.53.5, A.8.16.4.9
Cargo pockets 6.1.8, A.6.1.8
Definition 3.3.12
CBRN (definition) 3.3.13
CBRN barrier layer
Abrasion resistance test 2 ..... 7.20.13.4, 8.70
Burst strength 7.20.4.3
Chemical permeation resistance test 7.20.1.3, 8.67.1
Cold temperature performance test 7.20.4.5, 8.69
Cut resistance test 8.22.1.7, 8.22.2.1, 8.22.11
Definition 3.3.14, A.3.3.14
Footwear 7.20.13, 8.67.1.5, 8.67.10
Glove 7.20.10.1, 8.67.1.4, 8.67.9
Light degradation resistance test 8.62.1
Liquids, resistance to ..... 7.20.1.3(3), 8.29.1.1, 8.29.1.2
As moisture barrier for garment 7.20.4
Puncture propagation tear resistance test 7.20.4.4, 8.68
CBRN protective ensembles and elements 1.1.3, 1.2.2, 1.3.2, A.1.1.3, A.1.2, A.1.3.2, A.3.3.15
Certification of 4.3.4.3, A.4.3.4.3
Compliance statements, product label 5.2.1.1, 5.2.1.2, 5.3.1.1, 5.3.1.2
Design requirements, optional 6.20
Disposal 1.1.3.1, A.1.1.3.1
Man-in-simulant test (MIST) 8.66.1
Performance requirements 7.20, A.7.20.1.1
Tests, overview of ..... Table A.4.3.4(k)
User information 5.4.7
Whole garment and ensemble liquid penetration test 8.48.1.1, 8.48.13
CBRN terrorism agents .... 1.2.2; *see also* CBRN protective ensembles and elements
Compliance with requirements for protection against 5.2.1.1, 5.3.1.1
Definition 3.3.15, A.3.3.15
Certification/certified ..... Chap. 4
Definition 3.3.16
Recertification ..... 4.3.1 to 4.3.3, 4.3.15, 4.4
Testing and inspection ..... *see* Testing and inspection
Certification organization ..... 4.1.2.1, 4.1.2.2, 4.1.3, 4.1.7 to 4.1.10, 4.2, A.4.2.1, A.4.2.5, A.4.2.6, A.4.2.7.1, A.4.2.9
Contract with manufacturers 4.2.5, A.4.2.5
Definition 3.3.17
Testing program ..... *see* Testing and inspection
Char (definition) 3.3.18
Chemical permeation resistance test 7.20.1.3, 8.67
Chemical terrorism agents A.3.3.15
Definition 3.3.19
Chemical warfare (CW) agents A.3.3.15
Definition 3.3.20
Chin strap ..... 6.4.3, 7.4.4(5), 7.4.11, 8.2.1.9, 8.2.15
Definition 3.3.21
Cleaning ..... 5.4.4(6), A.5.4.4
Cleaning shrinkage resistance test 7.14.6, 7.16.5, 8.25
Closures ..... *see also* Hardware
Chin strap ..... 7.4.4(5)
Coats 6.1.9.2.1, 6.1.9.3.2, 6.1.9.4
Garment 6.1.5
Flame resistance 7.1.3.2, 7.1.3.3
Trousers 6.1.10.3
Coat .... *see also* Proximity fire fighting protective coat; Structural fire fighting protective coat
Design requirements ... 6.1.4, 6.1.11, 6.2.3, A.6.1, A.6.1.11, A.6.2.3
Liquid penetration, resistance to 8.48.1.1, 8.48.1.2, 8.48.1.3, 8.48.9, 8.48.11
Proximity fire fighting protective coat (definition) 3.3.93
Sizing 6.1.11, A.6.1.11
Cold temperature performance test 7.20.4.5, 8.69
Collar, coat 6.1.9.3
Definition 3.3.23
Collar lining
Definition 3.3.24
Flame resistance 7.1.3
Heat resistance ..... 7.1.4, 7.1.5, 7.1.8, 8.6.1.1(1), 8.6.8.5
Proximity fire fighting protective garment 6.3.4
Shrinkage, resistance to 7.1.17
Strength test 7.1.19, 8.50.1
Tear resistance 7.1.11
Water absorption, resistance to 7.1.18, 8.26.1

Copyright National Fire Protection Association
Provided by IHS under license with NFPA
No reproduction or networking permitted without license from IHS
Not for Resale

Compliance/compliant ..... Chap. 4, A.3.3.15
Definition 3.3.25
Product labels, compliance statements on 5.1.6, 5.2, 5.3, 6.1.11, 6.7.6, A.4.1.4, A.6.1.11
Components .....*see also* Faceshield/goggle; Interface components
Definition 3.3.26
Composite (definition) 3.3.27
Compression and impact tests (footwear) 7.10.12, 8.18
Conductive and compressive heat resistance test 7.1.6, 8.51
Conductive heat resistance tests
Test 1 ..... 7.7.5, 7.11.3, 8.7
Test 2 ..... 7.10.1, 8.8
Test 3 ..... 7.12.3, 8.60
Convective heat
Exposure test (retroreflectivity) ..... 8.46.4.4; *see also* Retroreflectivity and fluorescence test
Sample conditioning procedures 8.1.5, 8.1.6, A.8.1.6.8
Coronal plane 6.5.3.1, 6.5.4, 6.6.5.2, 6.14.4.1
Definition 3.3.28
Corrosion resistance test 7.1.20, 7.4.13, 7.8.3, 7.10.15, 8.30
Coveralls
Definition 3.3.29
Design requirements 6.1.1.1, 6.1.1.2, 6.1.11, A.6.1.11
Liquid penetration, resistance to 8.48.1.4, 8.48.11
Proximity fire fighting protective coverall (definition) 3.3.94
Structural fire fighting protective coverall (definition) 3.3.120
Crown (definition) 3.3.30
Crown straps (definition) 3.3.31
Cut resistance test 7.7.10, 7.7.11, 7.10.8, 8.22
CBRN barrier layers, test for 7.20.10.1, 7.20.13.1, 8.22.1.7, 8.22.2.1, 8.22.11
Water penetration resistance test 8.27.1

-D-

Definitions ..... Chap. 3
Design requirements ..... 4.3.8, Chap. 6
Footwear ..... 6.10 , 6.20.1.3
Garment ..... 6.1 to 6.3, 6.20.4, A.6.1, A.6.1.2, A.6.1.3, A.6.1.8, A.6.1.9.2, A.6.1.11, A.6.2.2, A.6.2.3, A.6.2.4
Glove ..... 6.7 to 6.9, 6.20.1.3
Helmet ..... 6.4 to 6.6, 6.20.1.3, A.6.5.2
Hood and hood interface components 6.1.9.3.3, 6.1.9.3.4, 6.13, 6.14, 6.20.1.3
Wristlet interface component 6.16
Dielectric test plane (definition) 3.3.32
Documentation, inspection and test data 4.3.16
Donning and doffing procedures ..... 5.4.4(4)
Drag rescue device (DRD) 6.1.9.1
Flame resistance 7.1.3, 8.2.1.1, 8.2.16
Function test 7.1.23, 8.59
Heat resistance 7.1.5
Materials strength test 7.1.22, 8.58
Sewing thread 7.1.10
Use information 5.4.5
Drip (definition) 3.3.33

-E-

Ear covers ..... 6.5.2(5), 6.5.4
Definition 3.3.34
Flame resistance 7.4.10, 8.2.1.1
Heat resistance ..... 7.4.4(4), 7.4.11, 8.6.1.1(3), 8.6.1.2, 8.6.2.2, 8.6.8, 8.6.12.3
Thermal protective performance 7.5.6, 8.10.1.1, 8.10.13, A.8.10.1.1
Electrical insulation tests (electricity resistance)
Test 1 ..... 7.4.6, 8.31
Test 2 ..... 7.10.11, 8.32, A.7.10.11
Energy absorbing system (helmet) ..... 6.4.2, 6.5.2(2), 6.6.2(2), 7.4.4(4)
Definition 3.3.36
Ensemble elements (definition) ..... 3.3.38; *see also* specific elements
Ensembles .....*see* CBRN protective ensembles and elements; Proximity fire fighting protective ensemble; Structural fire fighting protective ensemble
Entry fire fighting (definition) 3.3.39, A.3.3.39
Eyelet and stud post attachment test 7.10.14, 8.49

-F-

Faceshield .....*see also* Faceshield/goggle
Definition 3.3.40, A.3.3.40
Design requirements ..... 6.4.5, 6.4.6, 6.5.2.1, 6.6.2(4), 6.6.3
Flex at low temperature test 8.56.1
High-temperature blocking, resistance to 8.57.1
Radiant reflective capability 7.6.14, 8.52.1.1
Wet flex test 8.54.1
Faceshield/goggle ..... 6.4.5, 6.4.6, 6.5.2.2, 6.5.2(6), A.6.5.2
Compliance statements, product label 5.2.3, 5.3.3
Definition 3.3.41
Flame resistance 7.4.17, 7.5.2, 8.3.6.1, 8.3.8.1
Heat resistance 7.4.4, 8.6.12.3
Lens impact resistance test 7.4.16, 8.17, A.8.17.4.1.3, A.8.17.5.1.1
Test 1, high mass impact 8.17.4, A.8.17.4.1.3
Test 2, high velocity impact 8.17.5, A.8.17.5.1.1
Lens scratch resistance test 7.5.3, 8.23
Luminous (visible) transmittance test 7.5.4, 7.6.13, 8.45.1
Samples
Room temperature conditioning procedure 8.1.3.2
Wet conditioning procedure 8.1.7
Flame resistance
Definition 3.3.42
Inherent (definition) 3.3.60
Flame resistance tests
Test 1 ..... 7.1.3, 7.4.10, 7.5.2, 7.14.3, 7.16.2, 8.2
Test 2 ..... 7.4.5, 7.4.17, 7.5.5, 8.3
Test 3 ..... 7.7.6, 8.4
Test 4 ..... 7.10.2, 8.5
Flex at low temperature test 7.3.5, 7.6.6, 7.6.18, 7.9.5, 8.56
Flex cracking resistance test 7.10.18, 8.72
Flexing procedure for gloves 8.1.10
Fluorescence (definition) ..... 3.3.43; *see also* Retroreflectivity and fluorescence test; Trim
Follow-up programs 4.2.9, A.4.2.9
Definition 3.3.44
Footwear .....*see also* Proximity fire fighting protective footwear; Shanks; Structural fire fighting protective footwear
Abrasion resistance 7.10.10, 7.20.13.4, 8.24.1
CBRN 6.20.1.3, 7.20.13, 7.20.13.4, 8.48.13.1, 8.66.2.1, 8.66.2.4, 8.67.1.5, 8.67.10, 8.70, A.8.66.3.3
Cut resistance 7.10.8, 7.20.13.1, 8.22.1, 8.22.8
Design requirements 6.10, 6.20.1.3
Electricity, resistance to 7.10.11, 8.32.1, A.7.10.11
Flame resistance 7.10.2, 8.5.1
Flex at low temperature test 8.56.1
Flex cracking resistance 7.10.18, 8.72
Hardware 7.10.14, 7.10.15, 8.30.1.1, 8.30.9, 8.49
Heat resistance ..... 7.10.1, 7.11.2, 7.11.3, 7.12.3, 7.12.4, 8.6.1.1(4), 8.6.1.8, 8.6.2.1, 8.6.14, 8.7.1.1, 8.7.8, 8.8.1, 8.9.1, 8.52.1.1, 8.52.1.3, 8.52.8, 8.60, 8.61
High-temperature blocking, resistance to 8.57.1
Identification of footwear terms ..... Fig. A.3.3.45
Impact and compression, resistance to 7.10.12, 8.18.1
Labels 7.10.16, 8.42.1.1, 8.42.10
Liquids, resistance to 8.28.1.1, 8.28.1.4, 8.28.3.3, 8.28.3.4, 8.28.9, 8.29.1.1, 8.29.1.4, 8.29.3.3, 8.29.3.4, 8.29.9, 8.71
Performance requirements ..... 7.10 to 7.12, 7.20.13
Puncture resistance 7.10.6, 7.10.7, 7.20.13.2, 7.20.13.3, 8.20.1, 8.20.8, 8.21.1
Samples
Convective heat conditioning procedure 8.1.5
Room temperature conditioning procedure 8.1.3.1

--`,,```,,,,````-`-`,,`,,`,`,,`---
Copyright National Fire Protection Association
Provided by IHS under license with NFPA
No reproduction or networking permitted without license from IHS
Not for Resale

Wet conditioning procedure 8.1.9
Sewing thread 6.10.7, 7.10.3, 8.11.1
Sizing 5.4.6, 6.10.8
Slip resistance 7.10.9, 8.41, A.7.10.9
Tests, overview of ..... Table A.4.3.4(d), Table A.4.3.4(i)
Thermal insulation 7.10.1, 7.11.2, 7.11.3, 7.12.3, 7.12.4, 8.7.1.1, 8.7.8, 8.8.1, 8.9.1
Wet flex test 8.54.1
Functional (definition) 3.3.46

-G-

Garment .....*see also* Moisture barriers; Outer shell; Proximity fire fighting protective garment; Structural fire fighting protective garment; Trim
CBRN 6.20.1.3, 7.20.4, 8.48.1.1, 8.48.13.1, 8.66.2.1, 8.66.2.3, 8.67.1.2, 8.67.1.3 8.67.7, 8.67.8
Design requirements 6.1, 6.20.1.3, 6.20.4, A.6.1
Flame resistance 7.1.3, 8.2.1.1
Hardware .....*see* Hardware
Heat loss test, total 7.2.2, 8.34. A.8.34
Heat resistance .... 7.1.4 to 7.1.9, 8.6.1.1 to 8.6.1.4, 8.6.2.1, 8.6.10
Conductive and compressive heat resistance 8.51
Labels 7.1.3.1, 7.1.5, 7.1.21, 8.42.1.1, 8.42.7
Liquid penetration, resistance to .... 7.1.2, 7.1.14 to 7.1.16, 8.27.1, 8.28.1.1, 8.28.1.2, 8.29.1.1, 8.29.1.2, 8.48.1.1
Performance requirements ..... 7.1 to 7.3, 7.20.4
Samples
Room temperature conditioning procedure 8.1.3.1
Washing and drying procedures 8.1.2, 8.1.11
Sewing thread 7.1.10, 8.11.1
Strength 7.1.13, 7.1.19, 8.13.1, 8.14.1.1, 8.50.1
Tear resistance 7.1.11, 7.1.12, 8.12.1, 8.12.7
Tests, overview of ..... Table A.4.3.4(a), Table A.4.3.4(f)
Thermal insulation, test for 7.1.1, 8.10.1.1, 8.10.8, A.8.10.1.1
Water absorption resistance 7.1.18, 8.26.1
Gauntlet ..... 6.7.3, 7.9.2 to 7.9.6
Cut resistance test 7.7.11, 8.22.1.1 8.22.9
Definition 3.3.48
Flame resistance 7.7.6.1, 8.4.1.1, 8.4.9
Seam breaking strength 7.7.15, 8.14.1.1, 8.14.1.2, 8.14.7
Tests, overview of ..... Table A.4.3.4(c), Table A.4.3.4(h)
Thermal protective performance 7.7.2, 8.10.1.1, 8.10.12, A.8.10.1.1
Glove .....*see also* Gauntlet; Glove body; Glove liner; Proximity fire fighting protective glove; Structural fire fighting protective glove; Wristlet
Adhesion durability 8.55.1.1
Blocking durability 7.9.6, 8.57.1
CBRN 6.20.1.3, 7.20.10, 8.48.13.1, 8.66.2.1, 8.66.2.3, 8.67.1.4, 8.67.9
Cut resistance 7.7.10, 7.7.11, 7.20.10.1, 8.22.1, 8.22.7
Delamination, resistance to 7.9.3, 8.54.1
Design requirements ..... 6.7 to 6.9, 6.20.1.3
Donning, ease of 7.7.17, 8.37
Flame resistance 7.7.6, 8.4.1
Flex durability 7.9.5, 8.56.1
Flexing procedures for 8.1.10
Grip test 7.8.2, 7.9.7, 8.39
Hand function 7.7.13, 8.38
Hardware 7.8.3, 8.30.1.1, 8.30.7
Heat resistance ..... 7.7.3 to 7.7.5, 8.6.1.1(4), 8.6.1.2, 8.6.1.7, 8.6.2.2, 8.6.13, 8.7.1.1, 8.7.7, 8.52.1.1, 8.52.1.2, 8.52.7
Labels 7.8.19, 8.42.1.1, 8.42.9
Leakage, resistance to 7.7.16, 8.33.1
Liquids, resistance to ..... 7.7.8, 7.7.9, 8.28.1.1, 8.28.1.3, 8.28.3.2 to 8.28.3.4, 8.28.8, 8.29.1.1, 8.29.1.3, 8.29.3.2 to 8.29.3.4, 8.29.8
Performance requirements ..... 7.7 to 7.9, 7.20.10
Puncture resistance 7.7.12, 7.20.10.2, 8.20.1, 8.20.7
Samples
Convective heat conditioning procedure 8.1.5
Room temperature conditioning procedure 8.1.3.1
Washing and drying procedures 8.1.2
Wet conditioning procedure 8.1.8
Sewing thread 7.7.7, 8.11.1
Sizing ..... 6.7.5 to 6.7.7
Tests, overview of ..... Table A.4.3.4(c), Table A.4.3.4(h)
Thermal insulation, tests for 7.7.1, 7.7.2, 7.7.5, 8.7.1.1, 8.7.7, 8.10.1.1, 8.10.11, 8.10.12, A.8.10.1.1
Glove body
Cut resistance 7.7.10, 8.22.7
Design requirements 6.9.3
Flame resistance 7.7.6, 8.4.8
Performance requirements ..... 7.7.1, 7.7.4 to 7.7.6, 7.7.8 to 7.7.10, 7.7.12
Thermal insulation, tests for 7.7.1, 8.10.11
Glove donning test 7.7.17, 8.37
Glove hand function test 7.7.13, 8.38
Glove liner
Definition 3.3.50
Heat resistance ..... 8.6.1.1(3), 8.6.1.2, 8.6.2.1, 8.6.8
Liner retention test 7.7.18, 8.63
Glove wristlet .....*see* Wristlet
Goggles (definition) ..... 3.3.52; *see also* Faceshield/goggle
Grading (definition) 3.3.53
Grip test (gloves) 7.8.2, 7.9.7, 8.39

-H-

Hardware
Coat 6.1.9.4
Corrosion resistance test 8.30
Definition 3.3.54
Flame resistance 7.5.5
Footwear 6.10.6, 7.10.14, 7.10.15, 8.49
Garment ..... 6.1.6, 7.1.9, 7.1.20, 8.6.1.1(1), 8.6.1.5, 8.6.2.1, 8.30.1.1, 8.30.7
CBRN garment 6.20.4.3
Glove 7.8.3
Helmet 7.4.13, 7.5.5
Tests, overview of ..... Table A.4.3.4(a), Table A.4.3.4(c), Table A.4.3.4(h)
Trousers 6.1.10.3
Hazardous materials emergencies (definition) 3.3.55
Hazards involving compliant product 4.2.10, 4.6
Headband 6.5.4.4
Definition 3.3.56
Headform
Alderson 50-percentile male 6.4.5.2, 6.4.5.3, 6.4.6.1, 6.4.6.2, 6.6.5.5.1, 6.6.5.5.2, 8.17.4.1.1
Definition 3.3.57
ISEA Standard .... 8.15.4.1, Figs. 8.16.4.1(a) to (c), Table 8.16.4.1
ISO J 6.5.4.1, 6.5.4.2, 6.14.4, 8.3.5.1, 8.3.7.1, 8.16.4.1, 8.16.4.2, 8.19.4.1
Heat and thermal shrinkage resistance test ... 8.6; *see also* Conductive heat resistance tests; Radiant heat resistance
Ear covers 7.4.11
Footwear 7.10.19
Garment ..... 7.1.4, 7.1.5, 7.1.7 to 7.1.9
Glove 7.7.3, 7.7.4
Helmet 7.4.4, 7.4.11
Hood 7.14.4, 7.14.5
Wristlet 7.16.3, 7.16.4
Heat durability test (labels) 8.42.4.3
Heat loss test, total (garments) 7.2.2, 8.34, A.8.34
Helmet .....*see also* Ear covers; Faceshield; Proximity fire fighting protective helmet; Retention systems; Shell; Structural fire fighting protective helmet; Trim
CBRN 6.20.1.3, 8.48.13.1, 8.66.2.1
Design requirements ..... 6.4 to 6.6, 6.20.1.3, A.6.5.2
Electricity, resistance to 7.4.6, 8.31.1
Flame resistance 7.4.5, 8.3
Hardware 7.4.13, 8.30, 8.30.8

Copyright National Fire Protection Association
Provided by IHS under license with NFPA
No reproduction or networking permitted without license from IHS
Not for Resale

Heat resistance ..... 7.4.4, 7.4.11, 8.6.1.1(3), 8.6.1.1(4), 8.6.1.2, 8.6.1.6, 8.6.2.1, 8.6.12
Impact resistance 7.4.1, 7.4.2, 8.15.1, 8.16, A.8.16.4.9
Labels 7.4.14, 8.43.1
Performance requirements ..... 7.4 to 7.6
Physical penetration, resistance to 7.4.3, 8.19.1
Samples
Convective heat conditioning procedure 8.1.5, 8.1.6, A.8.1.6.8
Low temperature environmental conditioning procedure 8.1.4
Radiant heat environmental sample conditioning procedure 8.1.6, A.8.1.6.8
Room temperature conditioning procedure 8.1.3.2
Wet conditioning procedure 8.1.7
Self-contained breathing apparatus (SCBA) attached to 6.4.7
Sewing thread 7.4.12, 8.11.1
Suspension systems, retention ability 7.4.8, 8.36.1
Tests, overview of ..... Table A.4.3.4(b), Table A.4.3.4(g)
Helmet covers
Adhesion durability 7.6.17, 8.55.1.1
Blocking durability 7.6.19, 8.57.1
Delamination, resistance to 7.6.16, 8.54.1
Design requirements 6.6.4
Flex durability 7.6.18, 8.56.1
Heat resistance ..... 7.6.15, 8.6.1.1(3), 8.6.1.2, 8.6.8, 8.52.1.1
Performance requirements ..... 7.6.15 to 7.6.20
Sewing thread 8.11.1
Tear resistance 7.6.20
Helmet positioning index 6.4.5.2, 6.4.5.3, 6.4.6.1, 6.4.6.2, 6.5.4.1, 6.5.4.2, 6.6.5.5.1, 6.6.5.5.2
Helmet shroud
Blocking durability 7.6.7, 8.57.1
Delamination, resistance to 7.6.4, 8.54.1
Design requirements ..... 6.6.2(5), 6.6.5
Flex at low temperature test 7.6.6, 8.56.1
Heat resistance ..... 7.6.2, 8.6.1.1(3), 8.6.1.2, 8.6.8, 8.52.1.1
Outer shell materials, adhesion durability 7.6.5, 8.55.1.1
Performance requirements ..... 7.6.2 to 7.6.12
Sewing thread 8.11.1
Hood and hood interface components ..... Table A.4.3.4(e), Table A.4.3.4(j); *see also* Structural fire fighting protective hood
CBRN 6.20.1.3, 6.20.4.2.1, 8.48.13.1, 8.66.2.1, 8.66.2.3, 8.67.1.2, 8.67.1.3 8.67.7, 8.67.8
Design requirements 6.1.9.3.3, 6.1.9.3.4, 6.13, 6.14, 6.20.1.3
Face openings 7.14.1, 8.47.1.1
Elastic or manually adjusted 6.14.5.2, 7.14.1.2, 8.47.4
SCBA facepiece interface 6.14.5, 7.14.1, 8.47.1.1, 8.47.5
Flame resistance 7.14.3, 8.2.1.1, 8.2.1.6, 8.2.12
Heat resistance ... 7.14.4, 7.14.5, 8.6.1.1(3), 8.6.1.10, 8.6.8, 8.6.16
Labels 7.14.4, 7.14.5, 7.14.10, 8.2.1.6, 8.2.12, 8.25.9.1, 8.25.9.2, 8.42.1.1, 8.42.8
Performance requirements 7.14
Sewing thread 7.14.7, 8.11.1
Shrinkage, resistance to 7.14.6, 8.25.1.1
Shrinkage resistance test 8.25.9
Strength 7.14.8, 7.14.9, 8.13.1, 8.14.1.1
Tear resistance 8.12.1
Tests, overview of ..... Table A.4.3.4(e)
Thermal insulation, test for 7.14.2, 8.10.1.1, 8.10.9, A.8.10.1.1
Washing and drying of samples 8.1.2
Hood opening size retention test 7.14.1, 8.47

-I-

Impact tests
Footwear impact and compression tests 7.10.12, 8.18
Helmet
Faceshield/goggle component lens impact resistance tests ... 7.4.16, 8.17, A.8.17.4.1.3, A.8.17.5.1.1
Impact resistance test (acceleration) 7.4.2, 8.16, A.8.16.4.9
Top impact resistance test (force) 7.4.1, 8.15, A.8.15.4.9
Inherent flame resistant (definition) 3.3.60
Insole
Definition 3.3.61
Inserts 6.10.3.2
Inspection .....*see* Testing and inspection
Interface area (definition) 3.3.62
Interface components
Definition 3.3.63
Hood .....*see* Hood and hood interface components
Wristlet .....*see* Wristlet and wristlet interface components

-K-

Knit materials
Breaking strength, seam 8.14.2.2.2, 8.14.2.2.4, 8.14.4.2, 8.14.4.3
Burst strength test 8.13.1
Flame resistance test 8.2.1.3, 8.2.9
Glove wristlets 7.7.15
Hoods 7.14.8, 7.14.9
Seam assemblies 7.1.13.3, 7.1.13.4, 8.14.2.2.2, 8.14.2.2.4, 8.14.4.2, 8.14.4.3
Shrinkage resistance test 8.25.8
Thermal insulation test 8.10.1.1
Wristlets 7.7.15, 7.16.7, 7.16.8

-L-

Label durability and legibility tests ..... Table A.4.3.4(a), Table A.4.3.4(f), Table A.4.3.4(i)
Test 1 ..... 7.1.21, 7.8.19, 7.10.16, 7.14.10, 8.42
Test 2 ..... 7.4.14, 8.43
Labeled ..... 4.1.2, 4.1.5, 4.1.7, 4.2.5.2, 4.2.12, 5.1.3, A.4.1.4; *see also* Product labels
Definition 3.2.3
Garment, coat, or trouser 6.1.11, A.6.1.11
Glove 6.7.6
Ladder shanks .....*see* Shanks
Laundering durability test (labels) 8.42.4.1
Lens scratch resistance test, faceshield/goggle 7.5.3, 8.2.3
Lettering
Design requirements 6.6.4.3
Flame resistance 7.1.3, 8.2.1.7, 8.2.13
Heat resistance ..... 7.1.5, 8.6.1.1(1), 8.6.1.9, 8.6.15
Light degradation resistance test 7.1.24, 8.62, A.8.62.5.2
Liner retention test (gloves) 7.7.18, 8.63
Liquid borne pathogens .....*see* Body fluid-borne pathogen; Viral penetration resistance test
Liquid integrity test, overall
Test 1 ..... 7.7.16, 8.33, A.8.33.4.1
Test 2 ..... 7.10.17, 8.71
Liquid penetration resistance tests ..... 7.1.2, 7.1.15, 7.6.10, 7.7.9, 7.10.4, 8.28, 8.48, A.8.48.5(2), A.8.48.7
Viral penetration 7.1.16, 7.6.11, 7.7.8, 7.10.5, 8.29
Water penetration 7.1.14, 7.6.9, 8.27
Whole garment liquid penetration test (CBRN) 7.20.1.2, 8.48.1.1, 8.48.13
Listed 4.1.5
Definition 3.2.4, A.3.2.4
Lower torso (definition) 3.3.66
Low temperature environmental sample conditioning procedure 8.1.4
Luminous (visible) transmittance test 7.5.4, 7.6.13, 8.45, A.8.45.5

-M-

Maintenance ..... 5.4.4(6)
Major A seam .....*see* Seams
Major B seam .....*see* Seams
Man-in-simulant test (MIST) 7.20, 8.66, A.7.20.1.1, A.8.66.3.3, A.8.66.6.1, A.8.66.7.2.1

Copyright National Fire Protection Association
Provided by IHS under license with NFPA
No reproduction or networking permitted without license from IHS
Not for Resale

Manufacturers
Appeals process for 4.2.11
Certification inspection and testing 4.3.3, 4.3.16
Contract with certification organization 4.2.5, A.4.2.5
Definition 3.3.69
Hazards involving compliant product, investigation of ..... 4.6.8 to 4.6.11
Investigation of complaints and returns 4.7
Quality assurance program ... 4.2.7, 4.5, A.4.2.7.1, A.4.5.4, A.4.5.5
Recall system .....*see* Recall system
Safety alert 4.8
Measurement, units of 1.4
Melt (definition) 3.3.70
Midsagittal plane 6.5.3.1, 6.5.4, 6.6.5.2, 6.14.4.1
Definition 3.3.71
Minor seam .....*see* Seams
Model (definition) 3.3.73
Modifications, testing of ..... 4.2.8, 4.3.11, 4.3.12; *see also* Recertification
Moisture barriers
Convective heat conditioning of samples 8.1.5
Definition 3.3.74
Design requirements ..... 6.1.2 to 6.1.4, 6.1.9.4, 6.1.10.3, 6.10.3.1, 6.10.3.3, A.6.1.2, A.6.1.3
Evaporative heat transfer 7.2.2
Helmet shroud ..... 7.6.8 to 7.6.11
Material
CBRN protective garment 7.20.4, 8.27.1, 8.28.1.1, 8.29.1.1, 8.29.1.2, 8.67.1
Flame resistance 7.1.3
Heat resistance .... 7.1.4, 7.1.5, 8.6.1.1(1), 8.6.1.2, 8.6.2.2, 8.6.8
Light degradation resistance 7.1.24, 8.62.1
Liquids, resistance to ..... 7.1.14 to 7.1.16, 8.27.1, 8.28.1.1, 8.28.1.2, 8.28.3.5, 8.28.7, 8.29
Shrinkage, resistance to 7.1.17, 8.25.1.1
Tear resistance 7.1.12, 8.12.7.1, 8.12.7.2
Thermal protective performance 7.1.1
Seams
CBRN protective garment 7.20.4, 8.28.1.1, 8.29.1.2, 8.67.1.1
Heat resistance ..... 7.1.7, 8.6.1.1(2), 8.6.1.2, 8.6.1.3, 8.6.2.1, 8.6.9
Liquids, resistance to 7.1.15, 7.1.16, 8.28.1.1, 8.28.1.2, 8.28.3.5, 8.28.7, 8.29
Tests, overview of ..... Table A.4.3.4(a), Table A.4.3.4(f), Table A.4.3.4(i)
Thermal protective performance 7.1.1

-N-

Nape devices 6.4.3
Definition 3.3.75
Nonwoven textile materials, flame resistance testing 8.2.1.4, 8.2.10

-O-

Outer shell (garment)
Adhesion durability 7.3.4, 8.55.1.1
Blocking durability 7.3.6, 8.57.1
Definition 3.3.76
Delamination, resistance to 7.3.3, 8.54.1
Design requirements ..... 6.1.2 to 6.1.4, 6.1.9.4, 6.1.10.3, 6.2.2, 6.3.2, A.6.1.2, A.6.1.3, A.6.2.2
Flame resistance 7.1.3
Flex durability 7.3.5, 8.56.1
Heat loss test, total 7.2.2
Heat resistance ..... 7.1.4, 7.1.5, 7.1.8, 7.3.2, 8.6.1.1(1), 8.6.1.2, 8.6.2.2, 8.6.8, 8.52.1.1, 8.52.1.2, 8.52.7
Shrinkage, resistance to 7.1.17, 8.25.1.1
Strength test 7.1.19, 8.50.1
Tear resistance 7.1.11
Tests, overview of ..... Table A.4.3.4(a), Table A.4.3.4(f)
Thermal protective performance 7.1.1
Water absorption, resistance to 7.1.18, 8.26.1
Outer shell (helmet shroud) 7.6.8, 7.6.12

-P-

Particulates A.3.3.15
Definition 3.3.77, A.3.3.77
Penetration, resistance to .....*see also* Liquid penetration resistance tests; Puncture resistance tests; Viral penetration resistance test
Physical penetration, helmet 7.4.3, 8.19
Water penetration 7.1.14, 7.6.9, 8.27
Percent inward leakage (definition) 3.3.78
Performance requirements ..... 4.3.9, Chap. 7
Footwear ..... 7.10 to 7.12, 7.20.13
Garment ..... 7.1 to 7.3, 7.20.4
Glove ..... 7.7 to 7.9, 7.20.10
Helmet ..... 7.4 to 7.6
Hood interface component 7.14
Wristlet interface component 7.16
Physical penetration resistance test ..... 7.4.3, 8.19; *see also* Puncture resistance tests
Product labels ..... 4.1.6, 4.1.7, 4.3.5, 4.3.6; *see also* Label durability and legibility tests; Labeled
Compliance statements 5.1.6, 5.2, 5.3
Convective heat conditioning of samples 8.1.5
Definition 3.3.79
Ensembles, structural and proximity fire fighting 5.1, A.5.1.1, A.5.1.3
Flame resistance 7.1.3.1, 8.2.1.6, 8.2.12
Footwear 7.10.16
Garment 7.1.3.1, 7.1.5, 7.1.21
Glove 7.8.19
Heat and thermal shrinkage resistance ..... 7.1.5, 8.6.1.1(1), 8.6.1.1(3), 8.6.1.4, 8.6.2.1, 8.6.10
Helmet ..... 7.4.4(7), 7.4.14
Hood and hood interface components 7.14.4, 7.14.5, 7.14.10, 8.2.1.6, 8.2.12, 8.25.9.1, 8.25.9.2
Multiple label pieces 5.1.2
Shrinkage resistance test 8.25.9.1, 8.25.9.2
Protective coat .....*see* Coat
Protective coveralls .....*see* Coveralls
Protective footwear .....*see* Footwear
Protective garment .....*see* Garment
Protective glove .....*see* Glove
Protective helmet .....*see* Helmet
Protective hood .....*see* Hood and hood interface components
Protective trousers .....*see* Trousers
Protective wristlet .....*see* Wristlet and wristlet interface components
Proximity fire fighting (definition) 3.3.91, A.3.3.91
Proximity fire fighting protective coat (definition) ..... 3.3.93; *see also* Coat
Proximity fire fighting protective coverall (definition) ..... 3.3.94; *see also* Coveralls
Proximity fire fighting protective ensemble 1.1.3, 1.2.1.2, 1.3, 6.20.1, A.1.1.3, A.1.2
Definition 3.3.95
Product labels 5.1, A.5.1.1, A.5.1.3
User information 5.4, A.5.4.4
Proximity fire fighting protective ensemble with optional CBRN terrorism agent protection 1.2.2
Compliance statement, product label 5.3.1.1, 5.3.1.2
Definition 3.3.96
User information 5.4.7
Proximity fire fighting protective footwear
Definition 3.3.97
Design requirements 6.10
Performance requirements 7.10, 7.12, A.7.10.9, A.7.10.11
Tests, overview of ..... Table A.4.3.4(i)
Proximity fire fighting protective garment .....*see also* Garment
CBRN garment 6.20.4

Copyright National Fire Protection Association
Provided by IHS under license with NFPA
No reproduction or networking permitted without license from IHS
Not for Resale

Compliance statements, product label 5.3.5
Definition 3.3.98
Design requirements 6.1, 6.3, 6.20.4, A.6.1
Liquid penetration test 8.48.12
Outer shell materials, adhesion durability 8.55.1.1
Performance requirements 7.1, 7.3
Tests, overview of ..... Table A.4.3.4(f)
Proximity fire fighting protective glove .....*see also* Glove
Definition 3.3.99
Design requirements 6.7, 6.9, 7.7, 7.9
Tests, overview of ..... Table A.4.3.4(h)
Proximity fire fighting protective helmet .....*see also* Helmet
Certification of 4.3.4.2, A.4.3.4.2
Definition 3.3.100
Design requirements 6.4, 6.6
Performance requirements 7.4, 7.6
Tests, overview of ..... Table A.4.3.4(g)
Proximity fire fighting protective hood .....*see also* Hood and hood interface components
CBRN 6.20.4.2.1
Design requirements 6.13
Proximity fire fighting protective shroud
Compliance statements, product label 5.3.4
Definition 3.3.101
Proximity fire fighting protective trousers .....*see also* Trousers
Definition 3.3.102
Design requirements 6.1.4, 6.1.10, 6.1.11, 6.3.3, A.6.1.10, A.6.1.11
Puncture propagation tear resistance test 7.20.4.4, 8.68
Puncture resistance tests
Test 1 ..... 7.7.12, 7.10.6, 7.20.10.2, 7.20.13.2, 7.20.13.3, 8.20
Test 2 ..... 7.10.7, 8.21
Puncture-resistant devices 6.10.5
Corrosion resistance 7.10.15
Definition 3.3.103
Purchase specifications A.1.2
Purpose of standard 1.2, A.1.2

-Q-

Quality assurance program 4.2.7, 4.5, A.4.2.7.1, A.4.5.4, A.4.5.5

-R-

Radiant heat environmental sample conditioning procedure 8.1.6, A.8.1.6.8
Radiant heat resistance
Footwear
Proximity fire fighting 7.12.2
Structural fire fighting 7.11.2
Proximity fire fighting garments ..... 6.3.2 to 6.3.4, 7.3.2
Proximity fire fighting glove 6.9.3, 7.9.2
Proximity fire fighting helmets 6.6.4, 6.6.5.1, 7.6.2, 7.6.3, 7.6.14
Test 1 ..... 7.11.2, 8.9
Test 2 ... 7.3.2, 7.6.3, 7.6.14, 7.6.15, 7.9.2, 7.12.2, 7.12.4, 8.52, 8.61
Test 3 ..... 7.6.2, 8.53
Radiological particulate terrorism agents (definition) 3.3.104, A.3.3.104
Rainfall test, retroreflectivity 8.46.4.3
Recall system 4.2.7.1, 4.5.1, 4.8, A.4.2.7.1
Definition 3.3.105
Recertification ..... 4.3.1 to 4.3.3, 4.3.15, 4.4
Reference plane 6.5.3.1, 6.6.5.2, 6.14.4.1
Definition 3.3.106
References ..... Chap. 2, Annex B
Retention systems (helmet) ..... 6.4.2, 6.4.3, 6.5.2(3), 6.6.2(3)
Definition 3.3.107
Heat resistance ..... 7.4.4(4)
Test of retention ability 7.4.7, 8.35, 8.44
Retroreflection/retroreflective (definition) 3.3.108
Retroreflective markings
Definition 3.3.109
Trim .....*see* Trim
Retroreflectivity and fluorescence test 7.2.3, 7.4.15, 8.46
Convective heat exposure test 8.46.4.4
Rainfall test 8.46.4.3
Room temperature sample conditioning procedure 8.1.3

-S-

Samples .....*see also* Specimens
Definition 3.3.110
Preparation procedures ..... 8.1, A.8.1.6.8; *see also* specific tests
SCBA 6.4.7
CBRN ensembles ..... 5.4.7(2), 6.20.1.2, 6.20.1.4, 6.20.1.5, 6.20.4.2.1, 8.48.13.1, 8.66.2.1, 8.66.2.2, A.8.66.3.3
DRD function test 8.59.5.4, 8.59.5.5, 8.59.5.11
Facepiece interface 5.2.4, 6.14.5, 7.14.1, 8.47.1.1, 8.47.5
Pocket access while wearing A.6.1.8
Scope of standard 1.1, A.1.1
Seam assemblies
Definition 3.3.112
Strength test 7.1.13, 8.14.1.1
Seams
Breaking strength test 7.7.15, 7.14.9, 7.16.8, 8.14
Definition 3.3.111
DRD 7.1.22, 8.58.1.1
Glove 7.7.8, 7.7.9, 7.7.15
Helmet shroud ..... 7.6.9 to 7.6.11
Hood 7.14.9, 8.14.1.1
Liquids, resistance to 7.6.9, 7.7.8, 7.7.9
Moisture barrier .....*see* Moisture barriers
Sealing materials, flame resistance of 7.1.3.2
Tests, overview of ..... Table A.4.3.4(a), Table A.4.3.4(f)
Wristlet 7.16.8
Separate/separation (definition) 3.3.113
Shanks
Bend resistance test 7.10.13, 8.40
Corrosion resistance 7.10.15
Definition 3.3.114
Shell
Helmet ..... 6.6.2(1)
Design requirements ..... 6.4.2, 6.5.2(1), 6.6.4
Heat resistance 7.4.4, 8.53.1
Retention test 7.4.9, 8.44
Outer .....*see* Outer shell
Shrinkage resistance test 7.1.17
Shroud .....*see* Helmet shroud
Slip resistance test (footwear) 7.10.9, 8.41, A.7.10.9
Specimens .....*see also* Samples; specific tests
Definition 3.3.116
Small, testing of 8.2.1.8, 8.2.14
Use in multiple tests 4.3.13
Station/work uniforms A.8.10.1.1
Stretch textile materials 7.1.13.3, 7.1.13.4, 8.14.2.2.2, 8.14.2.2.4, 8.14.4.2, 8.14.4.3, 8.25.8
Structural fire fighting (definition) 3.3.117
Structural fire fighting protective coat .....*see also* Coat
Definition 3.3.119
Design requirements 6.1.4, 6.1.11, 6.2.3, A.6.1.11, A.6.2.3
Structural fire fighting protective coverall (definition) .... 3.3.120; *see also* Coveralls
Structural fire fighting protective ensemble 1.1.3, 1.2.1.1, 1.3, A.1.1.3, A.1.2, A.1.3.2
Definition 3.3.121, A.3.3.121
Product labels 5.1, A.5.1.1, A.5.1.3
Compliance statements 5.2
User information 5.4, A.5.4.4
Structural fire fighting protective ensemble with optional CBRN terrorism agent protection 1.2.2, 6.20.1
Compliance statement, product label 5.2.1.1, 5.2.1.2
Definition 3.3.122
User information 5.4.7

Copyright National Fire Protection Association
Provided by IHS under license with NFPA
No reproduction or networking permitted without license from IHS
Not for Resale

Structural fire fighting protective footwear .....*see also* Footwear
Definition 3.3.123
Design requirements 6.10
Performance requirements 7.10, 7.11, A.7.10.9, A.7.10.11
Tests, overview of ..... Table A.4.3.4(d)
Structural fire fighting protective garment .....*see also* Garment
CBRN garment 6.20.4
Compliance statement, product label 5.2.1.2, 5.2.5
Definition 3.3.124
Design requirements ..... 6.1, 6.2, 6.20.4, A.6.1, A.6.2.2 to A.6.2.4
Performance requirements 7.1, 7.2
Tests, overview of ..... Table A.4.3.4(a)
Structural fire fighting protective glove .....*see also* Glove
Definition 3.3.125
Design requirements 6.7
Performance requirements 7.7, 7.8
Tests, overview of ..... Table A.4.3.4(c)
Structural fire fighting protective helmet
Certification of 4.3.4.1, A.4.3.4.1
Compliance statements, product label 5.2.3, 5.3.3, 5.3.4
Definition 3.3.126
Design requirements 6.4, 6.5, A.6.5.2
Performance requirements 7.4, 7.5
Tests, overview of ..... Table A.4.3.4(b)
Structural fire fighting protective hood
CBRN 6.20.4.2.1
Compliance statements, product label 5.2.4
Definition 3.3.127
Design requirements 6.13, 6.14
Performance requirements 7.14
Tests, overview of ..... Table A.4.3.4(e)
Structural fire fighting protective trousers .....*see also* Trousers
Definition 3.3.128
Design requirements 6.1.4, 6.1.10, 6.1.11, 6.2.4, A.6.1.11, A.6.2.4
Suspension (definition) 3.3.129
Suspension system retention test 7.4.8, 8.36
Sweatband (definition) 3.3.130
Symbols 5.1.5

-T-

Tear resistance test 7.6.20
Garment 7.1.11, 7.1.12, 8.12
Helmet shroud outer shell 7.6.12
Testing and inspection ..... 1.2.3, A.1.2.3; *see also* specific tests, e.g. Flame resistance tests
For certification 4.2.6, 4.3.4, A.4.2.6
Follow-up 4.2.9, A.4.2.9
Methods ..... Chap. 8
Modified products 4.2.8, 4.3.11, 4.3.12
Quality assurance program 4.5, A.4.5.4, A.4.5.5
Recertification .....*see* Recertification
Records 4.3.16
Sample preparation procedures 8.1, A.8.1.6.8
Textile fabric .....*see also* Knit materials; Woven textile materials
Definition 3.3.131
Nonwoven textile materials, flame resistance testing 8.2.1.4, 8.2.10
Thermal barriers
Definition 3.3.132
Design requirements ..... 6.1.2 to 6.1.4, 6.1.9.4, 6.1.10.3, 6.7.2.4, 6.10.3.1, 6.10.3.3, A.6.1.2, A.6.1.3
Flame resistance 7.1.3
Heat loss test, total 7.2.2
Heat resistance ..... 7.1.4, 7.1.5, 8.6.1.1(1), 8.6.1.2, 8.6.2.2, 8.6.8
Shrinkage, resistance to 7.1.17, 8.25.1.1
Tear resistance 7.1.12, 8.12.7.1, 8.12.7.2
Tests, overview of ..... Table A.4.3.4(a), Table A.4.3.4(f)
Thermal protective performance .....*see* Thermal protective performance test
Thermal insulation
Footwear 7.10.1, 7.11.2, 7.11.3, 7.12.3, 7.12.4
Glove 7.7.1, 7.7.2, 7.7.5
Helmet shroud 7.6.8
Hood 7.14.2
Tests of ..... 8.7 to 8.10
Wristlet 7.16.1
Thermal protective performance test 8.10, A.8.10
Garments 7.1.1
Gloves 7.7.1, 7.7.2
Helmet ear covers 7.5.6
Helmet shroud 7.6.8
Hoods 7.14.2
Wristlets 7.16.1
Thread melting test ..... 8.11, Table A.4.3.4(a), Table A.4.3.4(c), Table A.4.3.4(d), Table A.4.3.4(f), Table A.4.3.4(h), Table A.4.3.4(i), Table A.4.3.4(j), A.8.11.4.1, A.8.11.4.3(2)
DRDs 7.1.10
Footwear 7.10.3
Garment 7.1.10
Glove 7.7.7
Helmet 7.4.12
Hood and hood interface components 7.14.7
Wristlet 7.16.6
Toecap
Corrosion resistance 7.10.15
Definition 3.3.133
Top (definition) 3.3.134
Top impact resistance test (force) (helmets) ... 7.4.1, 8.15, A.8.15.4.9
Top line (definition) 3.3.135
Toxic industrial chemicals (definition) 3.3.136
Trim .....*see also* Retroreflectivity and fluorescence test
Coat 6.2.3, A.6.2.3
Flame resistance 7.1.3, 8.2.1.5, 8.2.11
Garment 6.2.2, 7.1.3, 7.2.3, A.6.2.2
Heat resistance ..... 7.1.5, 8.6.1.1(1), 8.6.1.1(3), 8.6.1.4, 8.6.2.1, 8.6.10
Helmet ..... 6.5.2(5), 6.5.3, 6.6.4.3, 7.4.15
Samples
Convective heat conditioning procedure 8.1.5
Room temperature conditioning procedure 8.1.3.1
Tests, overview of ..... Table A.4.3.4(a)
Trousers 6.2.4, A.6.2.4
Trousers
Design requirements 6.1.4, 6.1.10, 6.1.11, 6.2.4, 6.3.3, A.6.1, A.6.1.11, A.6.2.4
Liquid penetration, resistance to 8.48.1.1, 8.48.1.3, 8.48.1.4, 8.48.9, 8.48.10, 8.48.11
Sizing 6.1.11, A.6.1.11

-U-

Units of measurement 1.4
Upper ..... Fig. A.3.3.45; *see also* Footwear
Definition 3.3.139
Performance requirements ..... 7.10.4 to 7.10.5, 7.20.13.1, 7.20.13.2
Tests 8.60.1.1
Upper torso (definition) 3.3.140
User information 4.3.6, 4.3.7

-V-

Viral penetration resistance test 7.1.16, 7.7.8, 7.10.5, 8.29
Helmet shroud 7.6.11

-W-

Washing and drying procedures, samples 8.1.2, 8.1.11
Water absorption resistance test 7.1.18, 8.26
Water penetration resistance test 7.1.14, 7.6.9, 8.27
Wear surface (definition) 3.3.141

--`,,```,,,,````-`-`,,`,,`,`,,`---

Copyright National Fire Protection Association
Provided by IHS under license with NFPA
No reproduction or networking permitted without license from IHS
Not for Resale

Wet conditioning sample procedure ..... 8.1.7 to 8.1.9
Wet flex test 7.3.3, 7.6.4, 7.6.16, 7.9.3, 8.54
Whole garment liquid penetration test 7.20.1.2
Winter liner
Definition 3.3.142
Flame resistance 7.1.3
Heat resistance ..... 7.1.4, 7.1.5, 8.6.1.1(1), 8.6.1.2, 8.6.2.2, 8.6.8
Shrinkage, resistance to 7.1.17, 8.25.1.1
Tear resistance 7.1.12, 8.12.7.1, 8.12.7.2
Tests, overview of ..... Table A.4.3.4(a), Table A.4.3.4(f)
Woven textile materials
Flame resistance test 8.2.1.2, 8.2.8
Seam assemblies, strength of ... 7.1.13.1, 7.1.13.3, 7.1.13.4, 8.12.1, 8.14.2.2.1, 8.14.2.2.2, 8.14.2.2.4, 8.14.4.1 to 8.14.4.3
Shrinkage resistance test 8.25.7, 8.25.8
Wristlet and wristlet interface components
Breaking strength test 8.14.1.1, 8.14.1.2, 8.14.7
Coat 6.1.9.2
Definition 3.3.143
Design requirements 6.16
Flame resistance 7.16.2, 8.2.1.1
Glove 6.7.3, 7.7.2, 7.7.6.2, 7.7.11
Breaking strength test 8.14.1.1, 8.14.1.2, 8.14.7
Cut resistance 8.22.1.1, 8.22.10
Flame resistance 8.4.1.1, 8.4.10
Knit 7.7.15
Tests, overview of ..... Table A.4.3.4(c), Table A.4.3.4(h)
Heat resistance ..... 7.16.3, 7.16.4, 8.6.1.1(3)
Performance requirements 7.16
Sewing thread 7.16.6, 8.11.1
Shrinkage, resistance to 7.16.5, 8.25.1.1
Strength 7.16.7, 7.16.8, 8.14.1.1, 8.14.1.2
Tear resistance 8.12.1
Tests, overview of ..... Table A.4.3.4(e), Table A.4.3.4(j)
Thermal insulation 7.16.1, 8.10.1.1, 8.10.10
Washing and drying of samples 8.1.2

Copyright National Fire Protection Association
Provided by IHS under license with NFPA
No reproduction or networking permitted without license from IHS
Not for Resale

Sequence of Events Leading to Issuance of an NFPA Committee Document

Step 1: Call for Proposals

- Proposed new Document or new edition of an existing Document is entered into one of two yearly revision cycles, and a Call for Proposals is published.

Step 2: Report on Proposals (ROP)

- Committee meets to act on Proposals, to develop its own Proposals, and to prepare its Report.
- Committee votes by written ballot on Proposals. If two-thirds approve, Report goes forward. Lacking two-thirds approval, Report returns to Committee.
- Report on Proposals (ROP) is published for public review and comment.

Step 3: Report on Comments (ROC)

- Committee meets to act on Public Comments to develop its own Comments, and to prepare its report.
- Committee votes by written ballot on Comments. If two-thirds approve, Report goes forward. Lacking two-thirds approval, Report returns to Committee.
- Report on Comments (ROC) is published for public review.

Step 4: Technical Report Session

- "*Notices of intent to make a motion"* are filed, are reviewed, and valid motions are certified for presentation at the Technical Report Session. ("Consent Documents" that have no certified motions bypass the Technical Report Session and proceed to the Standards Council for issuance.)
- NFPA membership meets each June at the Annual Meeting Technical Report Session and acts on Technical Committee Reports (ROP and ROC) for Documents with "certified amending motions."
- Committee(s) vote on any amendments to Report approved at NFPA Annual Membership Meeting.

Step 5: Standards Council Issuance

- Notification of intent to file an appeal to the Standards Council on Association action must be filed within 20 days of the NFPA Annual Membership Meeting.
- Standards Council decides, based on all evidence, whether or not to issue Document or to take other action, including hearing any appeals.

Committee Membership Classifications

The following classifications apply to Technical Committee members and represent their principal interest in the activity of the committee.

M *Manufacturer:* A representative of a maker or marketer of a product, assembly, or system, or portion thereof, that is affected by the standard.

U *User:* A representative of an entity that is subject to the provisions of the standard or that voluntarily uses the standard.

I/M *Installer/Maintainer:* A representative of an entity that is in the business of installing or maintaining a product, assembly, or system affected by the standard.

L *Labor:* A labor representative or employee concerned with safety in the workplace.

R/T *Applied Research/Testing Laboratory:* A representative of an independent testing laboratory or independent applied research organization that promulgates and/or enforces standards.

E *Enforcing Authority:* A representative of an agency or an organization that promulgates and/or enforces standards.

I *Insurance:* A representative of an insurance company, broker, agent, bureau, or inspection agency.

C *Consumer:* A person who is, or represents, the ultimate purchaser of a product, system, or service affected by the standard, but who is not included in the *User* classification.

SE *Special Expert:* A person not representing any of the previous classifications, but who has a special expertise in the scope of the standard or portion thereof.

NOTES;
1. "Standard" connotes code, standard, recommended practice, or guide.
2. A representative includes an employee.
3. While these classifications will be used by the Standards Council to achieve a balance for Technical Committees, the Standards Council may determine that new classifications of members or unique interests need representation in order to foster the best possible committee deliberations on any project. In this connection, the Standards Council may make appointments as it deems appropriate in the public interest, such as the classification of "Utilities" in the National Electrical Code Committee.
4. Representatives of subsidiaries of any group are generally considered to have the same classification as the parent organization.

Copyright National Fire Protection Association
Provided by IHS under license with NFPA
No reproduction or networking permitted without license from IHS
Not for Resale

NFPA Technical Committee Document Proposal Form

NOTE: All Proposals must be received by 5:00 p.m. EST/EDST on the published Proposal Closing Date.

For further information on the standards-making process, please contact the Codes and Standards Administration at 617-984-7249.

For technical assistance, please call NFPA at 617-770-3000.

FOR OFFICE USE ONLY

Log #:

Date Rec'd:

Please indicate in which format you wish to receive your ROP/ROC ☐ **electronic** ☐ **paper** ☒ **download**
(Note: If choosing the download option, you must view the ROP/ROC from our website; no copy will be sent to you.)

Date April 1, 200X **Name** John J. Doe **Tel. No.** 716-555-1234

Company Air Canada Pilot's Association

Street Address 123 Summer Street Lane **City** Lewiston **State** NY **Zip** 14092

Please indicate organization represented (if any)

1. (a) NFPA Document Title National Fuel Gas Code **NFPA No. & Year** 54, 200X Edition

(**b) Section/Paragraph** 3.3

2. Proposal Recommends (check one): ☐ new text ☒ revised text ☐ deleted text

3. Proposal (include proposed new or revised wording, or identification of wording to be deleted): [Note: Proposed text should be in legislative format, i.e., use underscore to denote wording to be inserted (inserted wording) and strike-through to denote wording to be deleted (~~deleted wording~~).]

Revise definition of effective ground-fault current path to read:

3.3.78 Effective Ground-Fault Current Path. An intentionally constructed, permanent, low impedance electrically conductive path designed and intended to carry ~~underground~~ electric fault current ~~conditions~~ from the point of a ground fault on a wiring system to the electrical supply source.

4. Statement of Problem and Substantiation for Proposal: (Note: State the problem that would be resolved by your recommendation; give the specific reason for your Proposal, including copies of tests, research papers, fire experience, etc. If more than 200 words, it may be abstracted for publication.)

Change uses proper electrical terms.

5. Copyright Assignment

(a) ☐ **I am the author of the text or other material (such as illustrations, graphs) proposed in this Proposal.**

(b) ☒ **Some or all of the text or other material proposed in this Proposal was not authored by me. Its source is as follows** (please identify which material and provide complete information on its source)**:**

ABC Co.

I hereby grant and assign to NFPA all and full rights in copyright in this Proposal and understand that I acquire no rights in any publication of NFPA in which this Proposal in this or another similar or analogous form is used. Except to the extent that I do not have authority to make an assignment in materials that I have identified in (b) above, I hereby warrant that I am the author of this Proposal and that I have full power and authority to enter into this assignment.

Signature (Required)

PLEASE USE SEPARATE FORM FOR EACH PROPOSAL • NFPA Fax: (617) 770-3500
Mail to: Secretary, Standards Council, National Fire Protection Association, 1 Batterymarch Park, Quincy, MA 02169-7471

8/29/2006

SAMPLE

Copyright National Fire Protection Association
Provided by IHS under license with NFPA
No reproduction or networking permitted without license from IHS
Not for Resale

NFPA Technical Committee Document Proposal Form

NOTE: All Proposals must be received by 5:00 p.m. EST/EDST on the published Proposal Closing Date.

For further information on the standards-making process, please contact the Codes and Standards Administration at 617-984-7249.

For technical assistance, please call NFPA at 617-770-3000.

FOR OFFICE USE ONLY

Log #: _____

Date Rec'd: _____

Please indicate in which format you wish to receive your ROP/ROC ☐ electronic ☐ paper ☐ download
(Note: If choosing the download option, you must view the ROP/ROC from our website; no copy will be sent to you.)

Date _____ **Name** _____ **Tel. No.** _____

Company _____

Street Address _____ **City** _____ **State** _____ **Zip** _____

Please indicate organization represented (if any) _____

1. (a) NFPA Document Title _____ **NFPA No. & Year** _____

(b) Section/Paragraph _____

2. Proposal Recommends (check one): ☐ new text ☐ revised text ☐ deleted text

3. Proposal (include proposed new or revised wording, or identification of wording to be deleted): [Note: Proposed text should be in legislative format, i.e., use underscore to denote wording to be inserted (inserted wording) and strike-through to denote wording to be deleted (~~deleted wording~~).]

4. Statement of Problem and Substantiation for Proposal: (Note: State the problem that would be resolved by your recommendation; give the specific reason for your Proposal, including copies of tests, research papers, fire experience, etc. If more than 200 words, it may be abstracted for publication.)

5. Copyright Assignment

(a) ☐ I am the author of the text or other material (such as illustrations, graphs) proposed in this Proposal.

(b) ☐ Some or all of the text or other material proposed in this Proposal was not authored by me. Its source is as follows (please identify which material and provide complete information on its source)**:**

_____

I hereby grant and assign to NFPA all and full rights in copyright in this Proposal and understand that I acquire no rights in any publication of NFPA in which this Proposal in this or another similar or analogous form is used. Except to the extent that I do not have authority to make an assignment in materials that I have identified in (b) above, I hereby warrant that I am the author of this Proposal and that I have full power and authority to enter into this assignment.

Signature (Required) _____

PLEASE USE SEPARATE FORM FOR EACH PROPOSAL • NFPA Fax: (617) 770-3500

Mail to: Secretary, Standards Council, National Fire Protection Association, 1 Batterymarch Park, Quincy, MA 02169-7471

8/29/2006

Copyright National Fire Protection Association
Provided by IHS under license with NFPA
No reproduction or networking permitted without license from IHS
Not for Resale