NFPA 1963

Standard for Fire Hose Connections

2003 Edition

NFPA, 1 Batterymarch Park, PO Box 9101, Quincy, MA 02269-9101
An International Codes and Standards Organization

NFPA License Agreement

This document is copyrighted by the National Fire Protection Association (NFPA), 1 Batterymarch Park, Quincy, MA 02269-9101 USA.
All rights reserved.

NFPA grants you a license as follows: The right to download an electronic file of this NFPA document for temporary storage on one computer for purposes of viewing and/or printing one copy of the NFPA document for individual use. Neither the electronic file nor the hard copy print may be reproduced in any way. In addition, the electronic file may not be distributed elsewhere over computer networks or otherwise. The hard copy print may only be used personally or distributed to other employees for their internal use within your organization.

Copyright National Fire Protection Association
Provided by IHS under license with NFPA
No reproduction or networking permitted without license from IHS

Not for Resale

IMPORTANT NOTICES AND DISCLAIMERS CONCERNING NFPA DOCUMENTS

NOTICE AND DISCLAIMER OF LIABILITY CONCERNING THE USE OF NFPA DOCUMENTS

NFPA codes, standards, recommended practices, and guides, of which the document contained herein is one, are developed through a consensus standards development process approved by the American National Standards Institute. This process brings together volunteers representing varied viewpoints and interests to achieve consensus on fire and other safety issues. While the NFPA administers the process and establishes rules to promote fairness in the development of consensus, it does not independently test, evaluate, or verify the accuracy of any information or the soundness of any judgments contained in its codes and standards.

The NFPA disclaims liability for any personal injury, property or other damages of any nature whatsoever, whether special, indirect, consequential or compensatory, directly or indirectly resulting from the publication, use of, or reliance on this document. The NFPA also makes no guaranty or warranty as to the accuracy or completeness of any information published herein.

In issuing and making this document available, the NFPA is not undertaking to render professional or other services for or on behalf of any person or entity. Nor is the NFPA undertaking to perform any duty owed by any person or entity to someone else. Anyone using this document should rely on his or her own independent judgment or, as appropriate, seek the advice of a competent professional in determining the exercise of reasonable care in any given circumstances.

The NFPA has no power, nor does it undertake, to police or enforce compliance with the contents of this document. Nor does the NFPA list, certify, test or inspect products, designs, or installations for compliance with this document. Any certification or other statement of compliance with the requirements of this document shall not be attributable to the NFPA and is solely the responsibility of the certifier or maker of the statement.

Copyright National Fire Protection Association
Provided by IHS under license with NFPA
No reproduction or networking permitted without license from IHS
Not for Resale

ADDITIONAL NOTICES AND DISCLAIMERS

Updating of NFPA Documents

Users of NFPA codes, standards, recommended practices, and guides should be aware that these documents may be superseded at any time by the issuance of new editions or may be amended from time to time through the issuance of Tentative Interim Amendments. An official NFPA document at any point in time consists of the current edition of the document together with any Tentative Interim Amendments and any Errata then in effect. In order to determine whether a given document is the current edition and whether it has been amended through the issuance of Tentative Interim Amendments or corrected through the issuance of Errata, consult appropriate NFPA publications such as the National Fire Codes® Subscription Service, visit the NFPA website at www.nfpa.org, or contact the NFPA at the address listed below.

Interpretations of NFPA Documents

A statement, written or oral, that is not processed in accordance with Section 6 of the Regulations Governing Committee Projects shall not be considered the official position of NFPA or any of its Committees and shall not be considered to be, nor be relied upon as, a Formal Interpretation.

Patents

The NFPA does not take any position with respect to the validity of any patent rights asserted in connection with any items which are mentioned in or are the subject of NFPA codes, standards, recommended practices, and guides, and the NFPA disclaims liability for the infringement of any patent resulting from the use of or reliance on these documents. Users of these documents are expressly advised that determination of the validity of any such patent rights, and the risk of infringement of such rights, is entirely their own responsibility.

NFPA adheres to applicable policies of the American National Standards Institute with respect to patents. For further information contact the NFPA at the address listed below.

Law and Regulations

Users of these documents should consult applicable federal, state, and local laws and regulations. NFPA does not, by the publication of its codes, standards, recommended practices, and guides, intend to urge action that is not in compliance with applicable laws, and these documents may not be construed as doing so.

Copyrights

This document is copyrighted by the NFPA. It is made available for a wide variety of both public and private uses. These include both use, by reference, in laws and regulations, and use in private self-regulation, standardization, and the promotion of safe practices and methods. By making this document available for use and adoption by public authorities and private users, the NFPA does not waive any rights in copyright to this document.

Use of NFPA documents for regulatory purposes should be accomplished through adoption by reference. The term "adoption by reference" means the citing of title, edition, and publishing information only. Any deletions, additions, and changes desired by the adopting authority should be noted separately in the adopting instrument. In order to assist NFPA in following the uses made of its documents, adopting authorities are requested to notify the NFPA (Attention: Secretary, Standards Council) in writing of such use. For technical assistance and questions concerning adoption of NFPA documents, contact NFPA at the address below.

For Further Information

All questions or other communications relating to NFPA codes, standards, recommended practices, and guides and all requests for information on NFPA procedures governing its codes and standards development process, including information on the procedures for requesting Formal Interpretations, for proposing Tentative Interim Amendments, and for proposing revisions to NFPA documents during regular revision cycles, should be sent to NFPA headquarters, addressed to the attention of the Secretary, Standards Council, NFPA, 1 Batterymarch Park, P.O. Box 9101, Quincy, MA 02269-9101.

For more information about NFPA, visit the NFPA website at www.nfpa.org.

Copyright National Fire Protection Association
Provided by IHS under license with NFPA
No reproduction or networking permitted without license from IHS
Not for Resale

Copyright © 2003, National Fire Protection Association, All Rights Reserved

NFPA 1963

Standard for

Fire Hose Connections

2003 Edition

This edition of NFPA 1963, *Standard for Fire Hose Connections*, was prepared by the Technical Committee on Fire Hose and acted on by NFPA at its May Association Technical Meeting held May 18–21, 2003, in Dallas, TX. It was issued by the Standards Council on July 18, 2003, with an effective date of August 7, 2003, and supersedes all previous editions.

This edition of NFPA 1963 was approved as an American National Standard on July 18, 2003.

Origin and Development of NFPA 1963

The development of a standard for screw threads and gaskets for fire hose connections began over a century ago. Specifications for hose couplings were drawn up by the NFPA as early as 1898. An NFPA committee appointed in 1905 established a national standard thread for 2½ in. and larger hose connections. Work on smaller hose threads was started in 1916, and the standard was adopted in 1922. The standard for suction hose coupling threads was adopted in 1955. The present standard covers the 11 standard sizes of threaded connections from ¾ in. (19 mm) to 8 in. (200 mm).

See Annex B for a detailed history of fire hose coupling thread standardization in the United States.

In recent history, editions of this standard were published in 1979, 1985, 1993, and 1998. The 1979 edition included metric conversion figures where applicable. Also, the number designation of the document was changed from NFPA 194 to NFPA 1963. Changes in 1985 were editorial.

The 1993 edition was a major expansion of the standard. A new chapter was added to cover general requirements for couplings and adapters. Another was added to cover nonthreaded connections in the 4 in. and 5 in. sizes. New material was added to the chapter on gaskets to cover gaskets used with nonthreaded connections. Sections dealing with the threads on fire department pump discharges and intakes, portable pumps, and sprinkler and standpipe systems were deleted, as requirements addressing those threads are covered in other NFPA standards. The title of the document was changed from *Standard for Screw Threads and Gaskets for Fire Hose Connections* to *Standard for Fire Hose Connections* to reflect the broader scope of the document.

In the 1998 edition, the requirement for locks on caps used with nonthreaded couplings was removed, and some editorial revisions were made to the document.

This edition adds dimensioning for an 8 in. NH thread. Format revisions were made to meet the requirements of the NFPA *Manual of Style*.

--`,,`-`-`,,`,,`,`,,`---

Copyright National Fire Protection Association
Provided by IHS under license with NFPA
No reproduction or networking permitted without license from IHS
Not for Resale

Technical Committee on Fire Hose

John W. Stacey, *Chair*
Bellevue Fire Department, NE [E]
Rep. International Association of Fire Chiefs

Milan J. Dotlich II, Underwriters Laboratories Inc., IL [RT]
Robert Ely, San Diego, CA [SE]
Ray K. Farm, City of Corvallis Fire Department, OR [U]
Thomas G. Farruggia, Illinois Fire Extinguisher Company, Inc., IL [IM]
Rep. National Association of Fire Equipment Distributors Inc.
Stephen Gilbert, Los Angeles, CA [SE]
Robert M. Harcourt, Snap-tite Hose, Inc., PA [M]
Paul Robert Kaveler, Ameren Services, MO [U]
Rep. Edison Electric Institute
Gregory Kozey, Kochek Company, Inc., CT [M]
Larry Linton, Washington Township Volunteer Fire Department, IN [L]
William J. Patterson, Federal Emergency Management Agency, CA [SE]
David J. Pritchard, Apex, NC [SE]
Mark Saner, Akron Brass, OH [M]
Joe Stonecypher, Kidde Fire Fighting, TX [M]
Ralph D. Taylor, U.S.D.A. Forest Service, CA [U]

Alternates

David A. Lord, Niedner Ltd, Canada [M]
(Voting Alt. to Fire Equipment Manufacturers' Association Rep.)
Byron J. Sarago, Detroit Edison Company, MI [U]
(Alt. to P. R. Kaveler)
Lois P. Sicking, U.S.D.A. Forest Service, CA [U]
(Alt. to R. D. Taylor)
Kenneth W. Zastrow, Underwriters Laboratories Inc., IL [RT]
(Alt. to M. J. Dotlich II)

Carl E. Peterson, NFPA Staff Liaison

This list represents the membership at the time the Committee was balloted on the final text of this edition. Since that time, changes in the membership may have occurred. A key to classifications is found at the back of the document.

NOTE: Membership on a committee shall not in and of itself constitute an endorsement of the Association or any document developed by the committee on which the member serves.

Committee Scope: This Committee shall have primary responsibility for documents on the size and design of fire hose connections, and the performance, maintenance, and selection of all types of fire hose, couplings, nozzles, and accessory equipment.

Copyright National Fire Protection Association
Provided by IHS under license with NFPA
No reproduction or networking permitted without license from IHS
Not for Resale

Contents

Chapter 1 Administration **1963–** 4
1.1 Scope **1963–** 4
1.2 Purpose **1963–** 4
1.3 Application **1963–** 4

Chapter 2 Referenced Publications **1963–** 4
2.1 General **1963–** 4
2.2 NFPA Publication **1963–** 4
2.3 Other Publications **1963–** 4

Chapter 3 Definitions **1963–** 4
3.1 General **1963–** 4
3.2 NFPA Official Definitions **1963–** 4
3.3 General Definitions **1963–** 4

Chapter 4 General Coupling and Adapter Requirements **1963–** 5
4.1 Workmanship **1963–** 5
4.2 Materials **1963–** 5
4.3 Minimum Waterway **1963–** 5
4.4 Gasket Groove **1963–** 5
4.5 Testing **1963–** 5
4.6 Internal Strength **1963–** 5
4.7 Tensile Strength **1963–** 5
4.8 Connect/Disconnect Capability **1963–** 6
4.9 Rough Usage **1963–** 6
4.10 Coupling Retention **1963–** 6
4.11 Vacuum Tightness **1963–** 6
4.12 Corrosion Resistance **1963–** 6
4.13 Nonmetallic Materials **1963–** 6
4.14 High-Temperature Performance **1963–** 6
4.15 Low-Temperature Performance **1963–** 6
4.16 Gasket Performance **1963–** 7

Chapter 5 Screw Threads for Couplings and Adapters **1963–** 7
5.1 Basic Form of Thread **1963–** 7
5.2 Thread Series Designation **1963–** 8
5.3 Dimensions of American National Fire Hose Connection Screw Threads (NH) **1963–** 8
5.4 Thread Dimensions **1963–** 8
5.5 Tolerance **1963–** 8
5.6 Gauges and Gauging NH Threads **1963–**11

Chapter 6 Nonthreaded Connections **1963–**15
6.1 General **1963–**15
6.2 Gauges **1963–**15
6.3 Locks **1963–**15
6.4 Indicators **1963–**16
6.5 Force to Connect and Disconnect **1963–**16
6.6 Caps **1963–**17
6.7 Adapters **1963–**17
6.8 Metal-Face Hydrant Connections **1963–**17

Chapter 7 Gaskets **1963–**19
7.1 Threaded Coupling Gasket **1963–**19
7.2 Nonthreaded Coupling Gaskets **1963–**19
7.3 Tail Gasket **1963–**19

Chapter 8 Use of NH Threads and Nonthreaded Connections **1963–**20
8.1 Hose Coupling Threads **1963–**20
8.2 Connections for Fire Service Nozzles for Handlines **1963–**20
8.3 Connections for Large-Stream Devices ... **1963–**21

Annex A Explanatory Material **1963–**22

Annex B History of Fire Hose Coupling Thread Standardization in the United States **1963–**26

Annex C Informational References **1963–**27

Index **1963–**28

Copyright National Fire Protection Association
Provided by IHS under license with NFPA
No reproduction or networking permitted without license from IHS
Not for Resale

NFPA 1963

Standard for

Fire Hose Connections

2003 Edition

IMPORTANT NOTE: This NFPA document is made available for use subject to important notices and legal disclaimers. These notices and disclaimers appear in all publications containing this document and may be found under the heading "Important Notices and Disclaimers Concerning NFPA Documents." They can also be obtained on request from NFPA or viewed at www.nfpa.org/disclaimers.

NOTICE: An asterisk (*) following the number or letter designating a paragraph indicates that explanatory material on the paragraph can be found in Annex A.

Changes other than editorial are indicated by a vertical rule beside the paragraph, table, or figure in which the change occurred. These rules are included as an aid to the user in identifying changes from the previous edition.

Information on referenced publications can be found in Chapter 2 and Annex C.

Chapter 1 Administration

1.1* Scope. This standard gives the performance requirements for new fire hose couplings and adapters with nominal sizes from ¾ in. (19 mm) through 8 in. (200 mm) and the specifications for the mating surfaces.

1.2 Purpose. The purpose of this standard is to provide a uniform standard for safe couplings and adapters for the users of fire hose connections.

1.3 Application. The requirements of this standard shall apply to the following devices in the sizes defined in Section 1.1.

(1) Fire hose couplings
(2) Booster hose couplings
(3) Hard suction hose couplings
(4) Pump intake connections on fire apparatus
(5) Pump discharge connections on fire apparatus
(6) Sprinkler connections
(7) Standpipe connections
(8) Hose connections on fire hydrants
(9) Adapters
(10) Reducers
(11) Caps
(12) Plugs
(13) Connections on all other hose fittings and appliances that attach to fire pumps, hose, or hydrants

Chapter 2 Referenced Publications

2.1 General. The documents or portions thereof listed in this chapter are referenced within this standard and shall be considered part of the requirements of this document.

2.2 NFPA Publication. National Fire Protection Association, 1 Batterymarch Park, P.O. Box 9101, Quincy, MA 02269-9101.

NFPA 1971, *Standard on Protective Ensemble for Structural Fire Fighting,* 2000 edition.

2.3 Other Publications.

2.3.1 ANSI Publication. American National Standards Institute, 25 West 43rd Street, 4th floor, New York, NY 10036.

ANSI/ASME B1.2, *Gages and Gaging for Unified Inch Screw Threads*, 1983.

2.3.2 ASTM Publications. American Society for Testing and Materials, 100 Barr Harbor Drive, West Conshohocken, PA 19428-2959.

ASTM B 30, *Standard Specification for Copper-Brass Alloys in Ingot Form*, 2000.

ASTM B 117, *Standard Practice for Operating Salt Spray (Fog) Apparatus,* 1997.

ASTM B 584, *Standard Specification for Copper Alloy Sand Castings for General Applications*, 2000.

ASTM D 395, *Standard Test Methods for Rubber Property — Compression Set*, 2001.

ASTM D 573, *Standard Test Method for Rubber Deterioration in an Air Oven*, 1999.

ASTM D 3183, *Standard Practice for Rubber — Preparation of Pieces for Test Purposes from Products*, 1984.

Chapter 3 Definitions

3.1 General. The definitions contained in this chapter shall apply to the terms used in this standard. Where terms are not included, common usage of the terms shall apply.

3.2 NFPA Official Definitions.

3.2.1* Approved. Acceptable to the authority having jurisdiction.

3.2.2* Authority Having Jurisdiction (AHJ). An organization, office, or individual responsible for enforcing the requirements of a code or standard, or for approving equipment, materials, an installation, or a procedure.

3.2.3 Shall. Indicates a mandatory requirement.

3.2.4 Should. Indicates a recommendation or that which is advised but not required.

3.3 General Definitions.

3.3.1 Adapter. Any device that allows fire hose couplings to be safely interconnected with couplings of different sizes, threads, or mating surfaces, or that allows fire hose couplings to be safely connected to other appliances.

3.3.2 Blunt Start. The removal of the incomplete thread at the end of the thread. This is a feature of threaded parts that are repeatedly assembled by hand. Also known as the "Higbee cut."

3.3.3 Coupling Assembly. A complete coupling including its gaskets and the expansion rings or collar pieces used in attaching the coupling to the hose.

3.3.4 Couplings. One set or pair of connection devices attached to a fire hose that allow the hose to be interconnected to additional lengths of hose or adapters and other firefighting appliances.

Copyright National Fire Protection Association
Provided by IHS under license with NFPA
No reproduction or networking permitted without license from IHS
Not for Resale

3.3.5 Gasket.

3.3.5.1 ***Bowl Gasket.*** See *Tail Gasket.*

3.3.5.2 ***Face Gasket.*** The water pressure seal at the mating surfaces of nonthreaded couplings or adapters.

3.3.5.3 ***Tail Gasket.*** A gasket in the bowl of a coupling used to provide a watertight seal between the coupling and the hose in an expansion ring-type coupling.

3.3.5.4 ***Thread Gasket.*** A gasket used in a female threaded connection to provide a watertight seal between the male and female threaded connections.

3.3.6 Hard Suction Hose. A hose used for drafting water from static supplies (lakes, rivers, wells, and so forth). It can also be used for supplying pumps on fire apparatus from hydrants if designed for that purpose. The hose contains a semirigid or rigid reinforcement designed to prevent collapse of the hose under vacuum.

3.3.7 Large-Stream Device. Any device that discharges water at a flow rate greater than 400 gpm (1600 L/min).

3.3.8 NH. An American National Fire Hose Connection Screw Thread. *(See Section 5.2.)*

3.3.9 Nonthreaded Coupling or Adapter. A coupling or adapter in which the mating is achieved with locks or cams but without the use of screw threads.

3.3.10 Nozzle.

3.3.10.1 ***Spray Nozzle.*** A nozzle with an adjustable pattern and a control device that shuts off the flow.

3.3.10.2 ***Straight Tip Nozzle.*** A smooth-bore nozzle for producing a solid stream.

3.3.11 Primary Inlet. The inlet where an appliance connects to a hose.

3.3.12 Screw Thread Coupling or Adapter. A coupling or adapter in which the mating is achieved with the use of threads.

Chapter 4 General Coupling and Adapter Requirements

4.1* Workmanship. The coupling assembly or adapter shall be made and finished in a workmanship-like manner throughout.

4.1.1 All edges shall be chamfered and free from burrs.

4.1.2 Hose bowl or tailpiece lips shall be rounded to prevent damage to the hose.

4.2 Materials. Materials used shall be free of defects that would adversely affect the performance or maintenance of individual components or of the overall assembly.

4.3 Minimum Waterway. The design of the shank-type and nonthreaded expansion ring coupling shall be such that the coupling shall not restrict the waterway by more than ¼ in. (6.4 mm) on couplings of nominal size 2½ in. (65 mm) or less and not more than ½ in. (12.7 mm) on couplings of nominal size greater than 2½ in. (65 mm). Gaskets shall not protrude into the waterway.

4.3.1 The waterway of a size-increasing-style coupling, other than a shank-type coupling, shall be no smaller than the nominal size of the hose to which it is attached.

4.3.2 The waterway of a size-reducing-style coupling, other than a shank-type coupling, shall be no smaller than the nominal size of the attachment face.

4.4 Gasket Groove. All sizes of internal NH threaded couplings, connections, or adapters shall have a standard gasket groove diameter as shown in Table 5.4.2, column *K. (See also Figure 5.1.5.1, dimension K.)*

4.5 Testing. Tests required by this standard shall be conducted by the manufacturer or by an approved testing facility designated by the manufacturer.

4.5.1 All tests shall be conducted on standard commercially available product.

4.5.2 Any test that requires the use of hose shall use hose with the highest service test pressure commercially available to which the coupling can be attached.

4.6 Internal Strength.

4.6.1 The coupling or adapter shall be capable of withstanding a hydrostatic pressure equal to the service test pressure without leakage, two times service test pressure with no leakage more severe than 12 drops per minute (½ ml per minute), and three times the service test pressure plus 100 psi (690 kPa) without separation. It shall be tested in accordance with 4.6.2 to prove compliance.

4.6.2 Internal Strength Test.

4.6.2.1 The coupling or adapter shall be plugged and adapted on one end to accept a pump connection from a hydrostatic test table.

4.6.2.2 The other end shall be plugged or adapted to accept a petcock to remove air.

4.6.2.3 The coupling or adapter shall be filled with water until all air has been exhausted and the petcock closed.

4.6.2.4 Pressure shall be applied until the test pressure is reached.

4.6.2.5 The test pressure shall be held for at least 15 seconds but not more than 60 seconds.

4.7 Tensile Strength.

4.7.1 Couplings shall have a tensile strength of at least 1200 lb/in. (210 N/mm) of diameter. They shall be tested in accordance with 4.7.2 to prove compliance.

4.7.2 Tensile Strength Test.

4.7.2.1 A pair of couplings shall be attached to a section of hose.

4.7.2.2 The couplings shall be connected together and the hose installed in a tension testing machine such that the tension will be on the couplings.

4.7.2.3 A tensile load shall be applied at a rate of not more than 2 in. (51 mm) per minute up to 1200 lb/in. (210 N/mm) of nominal hose diameter.

4.7.3 After the tensile strength test, the couplings shall be subjected to a test pressure equal to the service test pressure of the hose to which they are attached. Any leakage or deformation shall constitute failure of this test.

--`,,,-`-`,,`,,`,`,,`---

Copyright National Fire Protection Association
Provided by IHS under license with NFPA
No reproduction or networking permitted without license from IHS
Not for Resale

4.8 Connect/Disconnect Capability.

4.8.1 Couplings shall be capable of being connected and disconnected at least 3000 times without leakage or failure. They shall be tested in accordance with 4.8.2 to prove compliance.

4.8.2 Connect/Disconnect Capability Test.

4.8.2.1 Tests shall be conducted on standard commercial product without lubrication.

4.8.2.2 Hose couplings shall be completely connected and disconnected to each other at least 3000 times.

4.8.2.3 At the completion of this portion of the test, the couplings shall be attached to hose such that tested couplings can be connected together.

4.8.2.4 The tested couplings when connected together shall withstand the service test pressure of the hose without leakage or failure.

4.9 Rough Usage.

4.9.1 Couplings shall be capable of being dropped up to 6 ft (1.8 m) without deformation or damage that impairs operation. They shall be tested in accordance with 4.9.2 to prove compliance.

4.9.2 Rough Usage Test.

4.9.2.1 Couplings shall be installed on approximately 10 ft (3 m) lengths of fire hose.

4.9.2.2 The couplings shall be coupled together, forming a loop in the hose.

4.9.2.3 The coupling assembly shall then be dropped onto a concrete surface from a height of 6 ft (1.8 m) so as to land as squarely as possible on the swivel ring.

4.9.2.4 This shall be repeated three times.

4.9.2.5 The couplings shall operate freely and shall show no signs of deformation when inspected inside and outside.

4.9.2.6 Samples showing distortion or binding of the swivel mechanism shall be judged acceptable if the mechanism can be corrected to turn freely and evenly when straightened by the use of a hammer.

4.9.2.7 Samples developing cracks or broken sections either before or after attempts to straighten damaged portions shall be deemed as having failed the test. The coupling/hose assembly shall withstand the service test pressure of the hose without leakage or failure.

4.10 Coupling Retention.

4.10.1 Couplings shall remain on the hose without movement up to the rated burst pressure of the hose. They shall be tested in accordance with 4.10.2 to prove compliance.

4.10.2 Coupling Retention Test.

4.10.2.1 The couplings shall be attached to a 3 ft (1 m) length of hose.

4.10.2.2 The hose and coupling as an assembly shall be pressurized to the service pressure of the hose for 1 minute, and then the pressure shall be released.

4.10.2.3 The position of the coupling with relation to the hose shall be marked.

4.10.2.4 The pressure in the hose/coupling assembly shall then be raised at a rate of 300 psi to 1000 psi (2068 kPa to 6895 kPa) per minute until the rated burst pressure of the hose is reached.

4.10.2.5 The pressure shall be held for a minimum of 15 seconds but not longer than 60 seconds.

4.10.2.6 The hose shall show no signs of movement from the coupling.

4.11 Vacuum Tightness.

4.11.1 When couplings are used on hard suction hose, they shall be capable of holding a vacuum of 22 in. Hg (74.2 kPa) for 5 minutes. They shall be tested in accordance with 4.11.2 to prove compliance.

4.11.2 Vacuum Tightness Test.

4.11.2.1 The coupling shall be attached to a suitable section of hard suction hose.

4.11.2.2 A blank cap shall be attached to the coupling on one end, and a vacuum pump shall be attached to the other end.

4.11.2.3 A vacuum of 22 in. Hg (74.2 kPa) shall be developed within the assembly, and the assembly shall hold the vacuum for 5 minutes without any loss of vacuum.

4.12 Corrosion Resistance.

4.12.1 Couplings having parts other than high-strength yellow brass No. 8A as defined in ASTM B 30, *Standard Specification for Copper-Brass Alloys in Ingot Form*, or ASTM B 584, *Standard Specification for Copper Alloy Sand Castings for General Applications*, shall be capable of being coupled and uncoupled using accepted standard practices and shall not show any evidence of galvanic corrosion between dissimilar metals after testing in accordance with 4.12.2.

4.12.2 Coupling assemblies including expansion rings and gaskets shall be supported vertically in a fog chamber and exposed to salt spray (fog) as specified by ASTM B 117, *Standard Practice for Operating Salt Spray (Fog) Apparatus*, for a period of 120 hours.

4.13 Nonmetallic Materials. Any nonmetallic material used in couplings except for the gaskets shall be certified by the manufacturer of the nonmetallic material as fit for the service intended.

4.14 High-Temperature Performance.

4.14.1 Temperatures up to 275°F (135°C) shall not affect the ease with which a coupling assembly is coupled or uncoupled. Couplings shall be tested in accordance with 4.14.2 to prove compliance.

4.14.2 High-Temperature Performance Test.

4.14.2.1 Dry couplings with gaskets installed shall be conditioned in an oven at 275°F (135°C) for 4 hours.

4.14.2.2 Immediately upon their removal from the oven, the torque to connect and disconnect the couplings shall be measured and shall be within the original torque range.

4.15 Low-Temperature Performance.

4.15.1 Temperatures down to –25°F ± 2°F (–32°C ± 1°C) shall not affect the performance of the coupling assembly. Couplings shall be tested in accordance with 4.15.2 to prove compliance.

--`,,,`-`-`,,`,,`,`,,`---
Copyright National Fire Protection Association
Provided by IHS under license with NFPA
No reproduction or networking permitted without license from IHS
Not for Resale

4.15.2 Low-Temperature Performance Test.

4.15.2.1 With the gasket(s) installed, a coupling assembly shall be subjected to an environment of 0°F ± 1°F (–18°C ± 1°C) for a period of 24 hours and subsequently to an environment of –25°F ± 2°F (–32°C ± 1°C) for a period of 2 hours.

4.15.2.2 Following this exposure, the coupling shall be dropped from a height of 10 ft (3 m) onto its longitudinal axis.

4.15.2.3 The torque to connect and disconnect the couplings shall then be measured and shall be no greater than the torque required before the test.

4.16 Gasket Performance. The gasket material used with any coupling or adapter shall meet the test requirements of 4.16.1 through 4.16.3.

4.16.1 Low-Temperature Test.

4.16.1.1 Gaskets shall be subjected to an environment of 0°F ± 1°F (–18°C ± 1°C) for a period of 24 hours and subsequently to an environment of –25°F ± 2°F (–32°C ± 1°C) for a period of 2 hours.

4.16.1.2 Immediately upon removal from the test chamber, the gasket shall not crack when squeezed from any two opposite points into a figure 8 configuration.

4.16.2 Accelerated Aging Test.

4.16.2.1 Samples of the gasket material shall be prepared in accordance with the procedures described in ASTM D 3183, *Standard Practice for Rubber — Preparation of Pieces for Test Purposes from Products.*

4.16.2.2 The samples of the gaskets shall then be subjected to oven aging at 212°F ± 3°F (100°C ± 2°C) for 70 hours in accordance with ASTM D 573, *Standard Test Method for Rubber Deterioration in an Air Oven.*

4.16.2.3 The samples shall then be tested for tensile strength and ultimate elongation, and the tensile strength shall be not less than 80 percent, and the ultimate elongation shall be not less than 50 percent of the corresponding properties of samples that have not been so treated.

4.16.3 Compression Set Test.

4.16.3.1 A sample of gasket material shall be compressed as defined in ASTM D 395, *Standard Test Methods for Rubber Property — Compression Set (Method B),* and subjected to heat treatment at 158°F ± 1°F (70°C ± 1°C) for a period of 24 hours.

4.16.3.2 The compression set of the sample of gasket material so tested shall not exceed 15 percent of the original thickness.

Chapter 5 Screw Threads for Couplings and Adapters

5.1 Basic Form of Thread.

5.1.1 Basic thread form, as specified in Figure 5.1.1, shall have an included angle of 60 degrees and truncated top and bottom.

5.1.2 The basic angle of the thread between the sides of the thread measured in an axial plane shall be 60 degrees. The line bisecting this 60-degree angle shall be perpendicular to the axis of the screw thread.

5.1.3 The flat at the root and crest of the basic thread, as specified in Figure 5.1.1, shall be ⅛ times the pitch or 0.125 times the pitch *(p).*

5.1.4 The height of the basic thread shall be

$$h = 0.649519 \times p$$

or

$$h = \frac{0.649519}{n}$$

where:
p = pitch in inches ($p = 1/n$)
n = number of threads per inch
h = basic thread height in inches

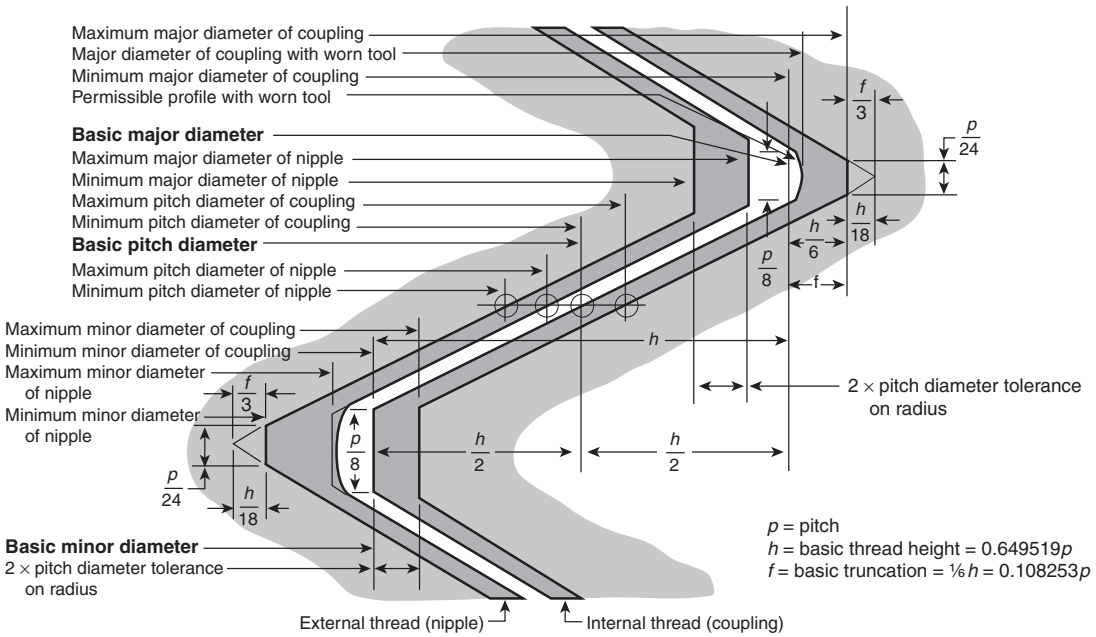

FIGURE 5.1.1 Form of Thread of American National Fire Hose Connection Screw Thread (NH). ***(See Table 5.4.1 for dimensions.)***

Copyright National Fire Protection Association
Provided by IHS under license with NFPA
No reproduction or networking permitted without license from IHS
Not for Resale

5.1.5* Blunt Start.

5.1.5.1 The outer ends of all external and internal threads shall be terminated by the blunt start, or Higbee cut, as shown in Figure 5.1.5.1, on full thread to avoid crossing and mutilation of thread.

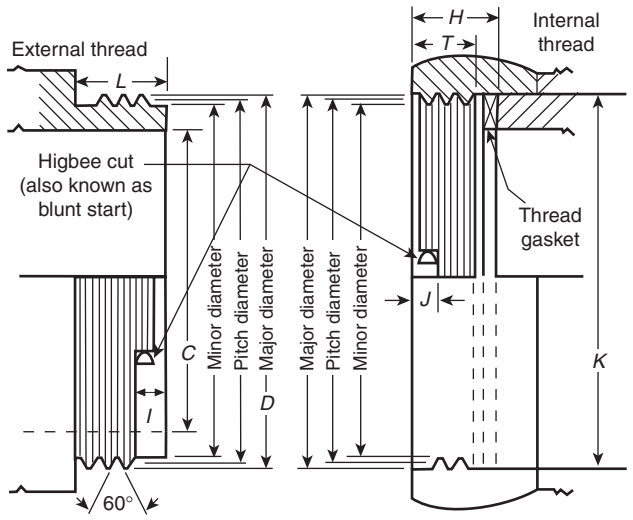

C = Inside diameter of connection waterway (nominal size of connection)
D = Approximate outside diameter of external thread (ODM)
H = Depth of internal connection
I = Length of the pilot from the face of the external connection to the start of the second thread (Higbee cut)
J = Distance from the face of the internal connection to the start of the second thread (Higbee cut)
K = Diameter of the gasket seat
L = Length of external thread
T = Length of internal thread

FIGURE 5.1.5.1 Nominal Dimensions of Connections. ***(See Table 5.4.2 for dimensions.)***

5.1.5.2 The blunt start shall have a minimum length of not less than the radius formed by a cutter with a radius not less than the height of the thread.

5.1.5.3 The maximum length of the blunt start shall not exceed 10 degrees of arc.

5.2 Thread Series Designation.

5.2.1* Fire hose connection threads that meet the requirements of this chapter shall be identified as "American National Fire Hose Connection Screw Threads" (abbreviated throughout the standard with the thread symbol NH).

5.2.2 They shall be designated by specifying in sequence the nominal size of the connection, the number of threads per inch, and the thread symbol "NH" as shown in the following example:

0.75-8 NH	3.5-6 NH
1-8 NH	4-4 NH
1.5-9 NH	4.5-4 NH
2.5-7.5 NH	5-4 NH
3-6 NH	6-4 NH
	8-4 NH

5.3 Dimensions of American National Fire Hose Connection Screw Threads (NH).

5.3.1 The basic major diameter, basic pitch diameter, and basic minor diameter and tolerances of the thread shall be as specified in Figure 5.1.1.

5.3.2 Nominal dimensions shall be as specified in Figure 5.1.5.1.

5.4 Thread Dimensions.

5.4.1 The basic dimensions for the threads shall be as specified in Table 5.4.1.

5.4.2 The nominal dimensions for the threads shall be as specified in Table 5.4.2.

5.4.3 The limiting dimensions for external threads (nipples) shall be as specified in Table 5.4.3.

5.4.4 The limiting dimensions for internal threads (couplings) shall be as specified in Table 5.4.4.

5.5 Tolerance.

5.5.1 The pitch diameter tolerances for a mating external (nipple) and internal (coupling) thread shall be the same.

5.5.1.1 Pitch diameter tolerances shall include lead and half-angle deviations.

5.5.1.2 Values for lead and half-angle deviations consuming one-half of the pitch diameter tolerance shall be as specified in Table 5.5.1.2.

5.5.2 The tolerance relationships for the external (nipple) threads shall be as follows:

$$\text{Major diameter tolerance} = 2 \times \text{pitch diameter tolerance}$$

$$\text{Minor diameter tolerance} = \text{pitch diameter tolerance} + 2h/9$$

5.5.2.1 The minimum minor diameter of the external thread (nipple) shall be such as to result in a flat equal to ⅓ of the $p/8$ basic flat ($p/24$) at the root when the pitch diameter of the nipple is at its minimum value.

5.5.2.2 The maximum minor diameter is basic but shall be permitted to be such as results from the use of a worn or rounded threading tool.

5.5.2.3 The maximum minor diameter shall be as specified in Figure 5.1.1 and is the diameter on which the minor diameter tolerance formula shown in 5.5.2 shall be based.

5.5.3 The tolerance relationships for the internal (coupling) threads shall be as follows:

$$\text{Minor diameter tolerance} = 2 \times \text{pitch diameter tolerance}$$

$$\text{Major diameter tolerance} = \text{pitch diameter tolerance} + 2h/g$$

Copyright National Fire Protection Association
Provided by IHS under license with NFPA
No reproduction or networking permitted without license from IHS
Not for Resale

Table 5.4.1 Basic Dimensions of NH Threads *(See Figure 5.1.1.)*

Nominal Size of Connection	Threads per Inch (tpi)[1]	Thread Designation (NH)[1]	Pitch (*p*)	Basic Thread Height (*h*)	External Thread Dimensions (Nipple)				Minimum Internal Thread Dimensions		
					Allowance	Maximum Major Diameter, *D* – Col. 6	Maximum Pitch Diameter, Col. 7 – *h*	Maximum Minor Diameter, Col. 7 – 2*h*	Minimum Minor Diameter, *D* – 2*h*	Basic Pitch Diameter, *D* – *h*	Basic Major Diameter, *D*
1	2	3	4	5	6	7	8	9	10	11	12
¾	8	0.75-8 NH	0.12500	0.08119	0.0120	1.3750	1.2938	1.2126	1.2246	1.3058	1.3870
1	8	1-8 NH	0.12500	0.08119	0.0120	1.3750	1.2938	1.2126	1.2246	1.3058	1.3870
1½	9	1.5-9 NH	0.11111	0.07217	0.0120	1.9900	1.9178	1.8457	1.8577	1.9298	2.0020
2½	7.5	2.5-7.5 NH	0.13333	0.08660	0.0150	3.0686	2.9820	2.8954	2.9104	2.9970	3.0836
3	6	3-6 NH	0.16667	0.10825	0.0150	3.6239	3.5156	3.4073	3.4223	3.5306	3.6389
3½	6	3.5-6 NH	0.16667	0.10825	0.0200	4.2439	4.1356	4.0273	4.0473	4.1556	4.2639
4	4	4-4 NH	0.25000	0.16238	0.0250	5.0109	4.8485	4.6861	4.7111	4.8735	5.0359
4½	4	4.5-4 NH	0.25000	0.16238	0.0250	5.7609	5.5985	5.4361	5.4611	5.6235	5.7859
5	4	5-4 NH	0.25000	0.16238	0.0250	6.2600	6.0976	5.9352	5.9602	6.1226	6.2850
6	4	6-4 NH	0.25000	0.16238	0.0250	7.0250	6.8626	6.7002	6.7252	6.8876	7.0500
8	4	8-4 NH	0.25000	0.16238	0.0250	9.0250	8.8626	8.7002	8.7252	8.8876	9.0500

[1]All other values are in inches.

Table 5.4.2 Nominal Dimensions of NH Threads *(See Figure 5.1.5.1.)*

Nominal Size of Connection Waterway, *C*	Threads per Inch (tpi)[1]	Thread Designation (NH)[1]	Approximate Outside Diameter of External Thread, *D*[2]	Length of External Thread (Min), *L*	Length of Pilot to Start of Second Thread (External), *I*	Depth of Internal Connector, *H*	Diameter of Gasket Seat in Coupling, *K*	Length of Internal Thread, *T*	Length of Pilot to Start of Second Thread (Internal), *J*
¾	8	0.75-8 NH	1⅜	⅝	5/32	19/32	1 7/16	13/32	5/32
1	8	1-8 NH	1⅜	⅝	5/32	19/32	1 7/16	13/32	5/32
1½	9	1.5-9 NH	2	⅝	5/32	19/32	2 1/16	13/32	5/32
2½	7½	2.5-7.5 NH	3 1/16	1	¼	15/16	3 3/16	1 1/16	3/16
3	6	3-6 NH	3⅝	1⅛	5/16	1 1/16	3¾	¾	¼
3½	6	3.5-6 NH	4¼	1⅛	5/16	1 1/16	4⅜	¾	¼
4	4	4-4 NH	5	1¼	7/16	1 3/16	5⅛	⅞	⅜
4½	4	4.5-4 NH	5¾	1¼	7/16	1 3/16	5⅞	⅞	⅜
5	4	5-4 NH	6¼	1⅜	7/16	1 5/16	6⅜	1	⅜
6	4	6-4 NH	7 1/32	1⅜	7/16	1 5/16	7⅛	1	⅜
8	4	8-4 NH	9 1/32	1½	7/16	1 7/16	9⅛	1⅛	⅜

[1]All other values are in inches.
[2]Approximate dimensions are for field identification purposes only. Exact basic manufacturing dimensions and tolerances are given in subsequent tables.

Copyright National Fire Protection Association
Provided by IHS under license with NFPA
No reproduction or networking permitted without license from IHS
Not for Resale

Table 5.4.3 Limits of Size and Tolerances of NH External Threads (Nipples)

Nominal Size of Connection	Threads per Inch (tpi)[1]	Thread Designation (NH)[1]	Pitch (*p*)	Basic Thread Height (*h*)	External Thread (Nipple)						
					Major Diameter			Pitch Diameter			Minor Diameter[2]
					Maximum	Minimum	Tolerance	Maximum	Minimum	Tolerance	Maximum
1	2	3	4	5	6	7	8	9	10	11	12
¾	8	0.75-8 NH	0.12500	0.08119	1.3750	1.3528	0.0222	1.2938	1.2827	0.0111	1.2126
1	8	1-8 NH	0.12500	0.08119	1.3750	1.3528	0.0222	1.2938	1.2827	0.0111	1.2126
1½	9	1.5-9 NH	0.11111	0.07217	1.9900	1.9678	0.0222	1.9178	1.9067	0.0111	1.8457
2½	7.5	2.5-7.5 NH	0.13333	0.08660	3.0686	3.0366	0.0320	2.9820	2.9660	0.0160	2.8954
3	6	3-6 NH	0.16667	0.10825	3.6239	3.5879	0.0360	3.5156	3.4976	0.0180	3.4073
3½	6	3.5-6 NH	0.16667	0.10825	4.2439	4.2079	0.0360	4.1356	4.1176	0.0180	4.0273
4	4	4-4 NH	0.25000	0.16238	5.0109	4.9609	0.0500	4.8485	4.8235	0.0250	4.6861
4½	4	4.5-4 NH	0.25000	0.16238	5.7609	5.7109	0.0500	5.5985	5.5735	0.0250	5.4361
5	4	5-4 NH	0.25000	0.16238	6.2600	6.2100	0.0500	6.0976	6.0726	0.0250	5.9352
6	4	6-4 NH	0.25000	0.16238	7.0250	6.9750	0.0500	6.8626	6.8376	0.0250	6.7002
8	4	8-4 NH	0.25000	0.16238	9.0250	8.9750	0.0500	8.8626	8.8376	0.0250	8.7002

[1]All other values are in inches.

[2]Dimensions given for the maximum minor diameter of the nipple are figured to the intersection of the worn tool arc with a centerline through crest and root. The minimum minor diameter of the nipple shall be that corresponding to a flat at the minor diameter of the minimum nipple equal to $p/24$ and may be determined by subtracting 11 $h/9$ (or 0.7939p) from the minimum pitch diameter of the nipple.

Table 5.4.4 Thread Limits of Size and Tolerances of NH Internal Threads (Couplings)

Nominal Size of Connection	Threads per Inch (tpi)[1]	Thread Designation (NH)[1]	Pitch (*p*)	Basic Thread Height (*h*)	Internal Thread (Coupling)						
					Minor Diameter			Pitch Diameter			Major Diameter[2]
					Minimum	Maximum	Tolerance	Minimum	Maximum	Tolerance	Minimum
1	2	3	4	5	6	7	8	9	10	11	12
¾	8	0.75-8 NH	0.12500	0.08119	1.2246	1.2468	0.0222	1.3058	1.3169	0.0111	1.3870
1	8	1-8 NH	0.12500	0.08119	1.2246	1.2468	0.0222	1.3058	1.3169	0.0111	1.3870
1½	9	1.5-9 NH	0.11111	0.07217	1.8577	1.8799	0.0222	1.9298	1.9409	0.0111	2.0020
2½	7.5	2.5-7.5 NH	0.13333	0.08660	2.9104	2.9424	0.0320	2.9970	3.0130	0.0160	3.0836
3	6	3-6 NH	0.16667	0.10825	3.4223	3.4583	0.0360	3.5306	3.5486	0.0180	3.6389
3½	6	3.5-6 NH	0.16667	0.10825	4.0473	4.0833	0.0360	4.1556	4.1736	0.0180	4.2639
4	4	4-4 NH	0.25000	0.16238	4.7111	4.7611	0.0500	4.8735	4.8985	0.0250	5.0359
4½	4	4.5-4 NH	0.25000	0.16238	5.4611	5.5111	0.0500	5.6235	5.6485	0.0250	5.7859
5	4	5-4 NH	0.25000	0.16238	5.9602	6.0102	0.0500	6.1226	6.1476	0.0250	6.2850
6	4	6-4 NH	0.25000	0.16238	6.7252	6.7752	0.0500	6.8876	6.9126	0.0250	7.0500
8	4	8-4 NH	0.25000	0.16238	8.7252	8.7752	0.0500	8.8876	8.9126	0.0250	9.0500

[1]All other values are in inches.

[2]Dimensions for the minimum major diameter of the coupling correspond to the basic flat $p/8$, and the profile at the major diameter produced by a worn tool must not fall below the basic outline. The maximum major diameter of the coupling shall be that corresponding to a flat at the major diameter of the maximum coupling equal to $p/24$ and can be determined by adding $11h/9$ (or 0.7939p) to the maximum pitch diameter of the coupling.

Copyright National Fire Protection Association
Provided by IHS under license with NFPA
No reproduction or networking permitted without license from IHS
Not for Resale

Table 5.5.1.2 Lead and Half-Angle Deviations Consuming One-Half of Pitch-Diameter Tolerances for NH Threads

Nominal Size of Connection	Thread per Inch (tpi)[1]	Thread Designation (NH)[1]	Pitch-Diameter Tolerance[2]	Lead Deviation Consuming One-Half of Pitch-Diameter Tolerance[3]	Half-Angle Deviation Consuming One-Half of Pitch-Diameter Tolerance[1]	
					Degree	Minute
¾	8	0.75-8 NH	0.0111	0.0032	1	42
1	8	1-8 NH	0.0111	0.0032	1	42
1½	9	1.5-9 NH	0.0111	0.0032	1	54
2½	7.5	2.5-7.5 NH	0.0160	0.0046	2	17
3	6	3-6 NH	0.0180	0.0052	2	4
3½	6	3.5-6 NH	0.0180	0.0052	2	4
4	4	4-4 NH	0.0250	0.0072	1	55
4½	4	4.5-4 NH	0.0250	0.0072	1	55
5	4	5-4 NH	0.0250	0.0072	1	55
6	4	6-4 NH	0.0250	0.0072	1	55
8	4	8-4 NH	0.0250	0.0072	1	55

[1]All other values are in inches.

[2]The tolerances specified for pitch diameter include all deviations of pitch diameter, lead, and angle. The full tolerance cannot, therefore, be used on pitch diameter unless the lead and angle of the thread are perfect. The last two columns give, for information, the deviations in lead and in angle, each of which can be compensated for by half the pitch-diameter tolerance given in this column. If lead and angle deviations both exist to the amount tabulated, the pitch diameter of a nipple, for example, must be reduced by the full tolerance or it will not enter the GO gauge.

[3]Between any two threads not farther apart than the length of engagement.

5.5.3.1 The minimum minor diameter of a coupling shall be such as to result in a basic flat, $p/8$, at the crest when the pitch diameter of the coupling is at its minimum value.

5.6 Gauges and Gauging NH Threads.

5.6.1 The limits of size for the gauges to be used in the gauging of fire hose connections shall be as specified in Table 5.6.1(a), Table 5.6.1(b), and Table 5.6.1(c).

5.6.2 For these gauges, the allowable variation in lead between any two threads not farther apart than the length of engagement shall be ±0.0004 in. The allowable variation in half-angle of thread shall be ±5 minutes.

5.6.3* Except as otherwise specified herein, the gauges and gauging practices shall conform to ANSI/ASME B1.2, *Gages and Gaging for Unified Inch Screw Threads.*

5.6.4* Adjustable thread ring gauges shall be set by means of threaded setting plug gauges, the dimensions of which are given in Table 5.6.1(a). Means of setting ring gauges shall be as specified in ANSI/ASME B1.2, *Gages and Gaging for Unified Inch Screw Threads.*

--`,,,-`-`,,`,,`,`,,`---

Copyright National Fire Protection Association
Provided by IHS under license with NFPA
No reproduction or networking permitted without license from IHS
Not for Resale

Table 5.6.1(a) Setting Thread Plug Limits of Size for NH Thread Ring Gauges[1]

Nominal Size of Connection	Threads per Inch (tpi)[2]	Thread Designation (NH)[2]		X Truncated Setting Plugs						X Basic-Crest Setting Plugs[3]	
				Plug for GO Thread Gauge			Plug for LO (NOT GO) Thread Gauge			Major Diameter	
				Major Diameter		Pitch Diameter	Major Diameter		Pitch Diameter	Plug for GO Thread Gauge	Plug for LO (NOT GO) Thread Gauge
				Truncated	Full		Truncated	Full			
Gauge Tolerance →				–	+	–	–	+	+	+	+
1	2	3	4	5	6	7	8	9	10	11	12
¾	8	0.75-8 NH	**Max**	1.3579	1.3757	1.2938	1.3368	1.3757	1.2831	1.3757	1.3757
			Min	1.3572	1.3750	1.2934	1.3361	1.3750	1.2827	1.3750	1.3750
1	8	1-8 NH	**Max**	1.3579	1.3757	1.2938	1.3368	1.3757	1.2831	1.3757	1.3757
			Min	1.3572	1.3750	1.2934	1.3361	1.3750	1.2827	1.3750	1.3750
1½	9	1.5-9 NH	**Max**	1.9742	1.9907	1.9178	1.9548	1.9907	1.9071	1.9907	1.9907
			Min	1.9735	1.9900	1.9174	1.9541	1.9900	1.9067	1.9900	1.9900
2½	7.5	2.5-7.5 NH	**Max**	3.0507	3.0693	2.9820	3.0237	3.0693	2.9665	3.0693	3.0693
			Min	3.0500	3.0686	2.9815	3.0230	3.0686	2.9660	3.0686	3.0686
3	6	3-6 NH	**Max**	3.6029	3.6247	3.5156	3.5698	3.6247	3.4981	3.6247	3.6247
			Min	3.6021	3.6239	3.5151	3.5690	3.6239	3.4976	3.6239	3.6239
3½	6	3.5-6 NH	**Max**	4.2229	4.2452	4.1356	4.1898	4.2452	4.1182	4.2452	4.2452
			Min	4.2216	4.2439	4.1350	4.1885	4.2439	4.1176	4.2439	4.2439
4	4	4-4 NH	**Max**	4.9828	5.0124	4.8485	4.9318	5.0124	4.8241	5.0124	5.0124
			Min	4.9813	5.0109	4.8479	4.9303	5.0109	4.8235	5.0109	5.0109
4½	4	4.5-4 NH	**Max**	5.7328	5.7624	5.5985	5.6818	5.7624	5.5741	5.7624	5.7624
			Min	5.7313	5.7609	5.5979	5.6803	5.7609	5.5735	5.7609	5.7609
5	4	5-4 NH	**Max**	6.2319	6.2615	6.0976	6.1809	6.2615	6.0732	6.2615	6.2615
			Min	6.2304	6.2600	6.0970	6.1794	6.2600	6.0726	6.2600	6.2600
6	4	6-4 NH	**Max**	6.9969	7.0265	6.8626	6.9459	7.0265	6.8382	7.0265	7.0265
			Min	6.9954	7.0250	6.8620	6.9444	7.0250	6.8376	7.0250	7.0250
8	4	8-4 NH	**Max**	8.9969	9.0265	8.8626	8.9459	9.0265	8.8382	9.0265	9.0265
			Min	8.9954	9.0250	8.8620	8.9444	9.0250	8.8376	9.0250	9.0250

[1]Gauge limit values in this table have been obtained in accordance with ANSI/ASME B1.2, *Gages and Gaging for Unified Inch Screw Threads*.

[2]All other values are in inches.

[3]Pitch-diameter limits for basic-crest GO setting plugs are the same as those shown in column 7. Pitch-diameter limits for basic-crest LO (NOT GO) setting plugs are the same as those shown in column 10.

Copyright National Fire Protection Association
Provided by IHS under license with NFPA
No reproduction or networking permitted without license from IHS
Not for Resale

Table 5.6.1(b) Gauge Limits of Size for Ring Gauges for NH External (Nipple) Threads[1]

Nominal Size of Connection	Threads per Inch (tpi)[2]	Thread Designation (NH)[2]		X Thread Ring Gauges				Z Plain Ring Gauges	
				GO		LO (NOT GO)		Major Diameter	
				Pitch Diameter	Minor Diameter	Pitch Diameter	Minor Diameter	GO	NOT GO
Gauge Tolerance →				–	–	+	+	–	–
1	2	3	4	5	6	7	8	9	10
¾	8	0.75-8 NH	**Max**	1.2938	1.2246	1.2831	1.2563	1.37500	1.35292
			Min	1.2934	1.2239	1.2827	1.2556	1.37488	1.35280
1	8	1-8 NH	**Max**	1.2938	1.2246	1.2831	1.2563	1.37500	1.35292
			Min	1.2934	1.2239	1.2827	1.2556	1.37488	1.35280
1½	9	1.5-9 NH	**Max**	1.9178	1.8577	1.9071	1.8833	1.99000	1.96796
			Min	1.9174	1.8570	1.9067	1.8826	1.98984	1.96780
2½	7.5	2.5-7.5 NH	**Max**	2.9820	2.9104	2.9665	2.9378	3.06860	3.03680
			Min	2.9815	2.9097	2.9660	2.9371	3.06840	3.03660
3	6	3-6 NH	**Max**	3.5156	3.4223	3.4981	3.4623	3.62390	3.58810
			Min	3.5151	3.4215	3.4976	3.4615	3.62370	3.58790
3½	6	3.5-6 NH	**Max**	4.1356	4.0473	4.1182	4.0828	4.24390	4.20810
			Min	4.1350	4.0460	4.1176	4.0815	4.24370	4.20790
4	4	4-4 NH	**Max**	4.8485	4.7111	4.8241	4.7709	5.01090	4.96115
			Min	4.8479	4.7096	4.8235	4.7694	5.01065	4.96090
4½	4	4.5-4 NH	**Max**	5.5985	5.4611	5.5741	5.5209	5.76090	5.71115
			Min	5.5979	5.4596	5.5735	5.5194	5.76065	5.71090
5	4	5-4 NH	**Max**	6.0976	5.9602	6.0732	6.0200	6.26000	6.21025
			Min	6.0970	5.9587	6.0726	6.0185	6.25975	6.21000
6	4	6-4 NH	**Max**	6.8626	6.7252	6.8382	6.7850	7.02500	6.97532
			Min	6.8620	6.7237	6.8376	6.7835	7.02468	6.97500
8	4	8-4 NH	**Max**	8.8626	8.7252	8.8382	8.7850	9.02500	8.97532
			Min	8.8620	8.7237	8.8376	8.7835	9.02468	8.97500

[1]Gauge limit values in this table have been obtained in accordance with ANSI/ASME B1.2, *Gages and Gaging for Unified Inch Screw Threads,* except for the values shown in column 6. The maximum values shown in column 6 are values for the minimum minor diameter of the internal thread.

[2]All other values are in inches.

Copyright National Fire Protection Association
Provided by IHS under license with NFPA
No reproduction or networking permitted without license from IHS
Not for Resale

Table 5.6.1(c) Gauge Limits of Size for Plug Gauges for NH Internal (Coupling) Threads[1]

Nominal Size of Connection	Threads per Inch (tpi)[2]	Thread Designation (NH)[2]		X Thread Plug Gauges				Z Plain Plug Gauges	
				GO		HI (NOT GO)		Minor Diameter	
				Major Diameter	Pitch Diameter	Major Diameter	Pitch Diameter	GO	NOT GO
Gauge Tolerance →				+	+	−	−	+	−
1	2	3	4	5	6	7	8	9	10
¾	8	0.75-8 NH	**Max**	1.3877	1.3062	1.3710	1.3169	1.22472	1.24680
			Min	1.3870	1.3058	1.3703	1.3165	1.22460	1.24668
1	8	1-8 NH	**Max**	1.3877	1.3062	1.3710	1.3169	1.22472	1.24680
			Min	1.3870	1.3058	1.3703	1.3165	1.22460	1.24668
1½	9	1.5-9 NH	**Max**	2.0027	1.9302	1.9890	1.9409	1.85786	1.87990
			Min	2.0020	1.9298	1.9883	1.9405	1.85770	1.87974
2½	7.5	2.5-7.5 NH	**Max**	3.0843	2.9975	3.0707	3.0130	2.91060	2.94240
			Min	3.0836	2.9970	3.0700	3.0125	2.91040	2.94220
3	6	3-6 NH	**Max**	3.6397	3.5311	3.6208	3.5486	3.42250	3.45830
			Min	3.6389	3.5306	3.6200	3.5481	3.42230	3.45810
3½	6	3.5-6 NH	**Max**	4.2652	4.1562	4.2458	4.1736	4.04750	4.08330
			Min	4.2639	4.1556	4.2445	4.1730	4.04730	4.08310
4	4	4-4 NH	**Max**	5.0374	4.8741	5.0068	4.8985	4.71135	4.76110
			Min	5.0359	4.8735	5.0053	4.8979	4.71110	4.76085
4½	4	4.5-4 NH	**Max**	5.7874	5.6241	5.7568	5.6485	5.46135	5.51110
			Min	5.7859	5.6235	5.7553	5.6479	5.46110	5.51085
5	4	5-4 NH	**Max**	6.2865	6.1232	6.2559	6.1476	5.96045	6.01020
			Min	6.2850	6.1226	6.2544	6.1470	5.96020	6.00995
6	4	6-4 NH	**Max**	7.0515	6.8882	7.0209	6.9126	6.72552	6.77520
			Min	7.0500	6.8876	7.0194	6.9120	6.72520	6.77488
8	4	8-4 NH	**Max**	9.0515	8.8882	9.0209	8.9126	8.72552	8.77520
			Min	9.0500	8.8876	9.0194	8.9120	8.72520	8.77488

[1]Gauge limit values in this table have been obtained in accordance with ANSI/ASME B1.2, *Gages and Gaging for Unified Inch Screw Threads*.
[2]All other values are in inches.

Copyright National Fire Protection Association
Provided by IHS under license with NFPA
No reproduction or networking permitted without license from IHS
Not for Resale

Chapter 6 Nonthreaded Connections

6.1* General. The requirements of Chapters 1 through 4 and the requirements of this chapter shall apply to nonthreaded connections in the 4 in. (100 mm) and 5 in. (125 mm) sizes.

6.2* Gauges.

6.2.1 The dimensional characteristics and tolerances for the metal-face gauges to be used in the gauging of nonthreaded connections shall be as specified in Figure 6.2.1(a) for a Type A test gauge and Figure 6.2.1(b) for a Type B test gauge.

6.2.2 In addition, the 4 in. (100 mm) metal-face gauge shall meet the dimensional characteristics of Figure 6.2.2(a), and the 5 in. (125 mm) metal-face gauge shall meet the dimensional characteristics of Figure 6.2.2(b).

6.3 Locks.

6.3.1* Nonthreaded connections shall be provided with locks within the confines of the nonthreaded connection to ensure against unintentional disconnection. Caps for use with nonthreaded connections shall be permitted without a lock.

6.3.2 The locks shall be located so that the nonthreaded connection will connect to the Type A metal-face test gauge and lock.

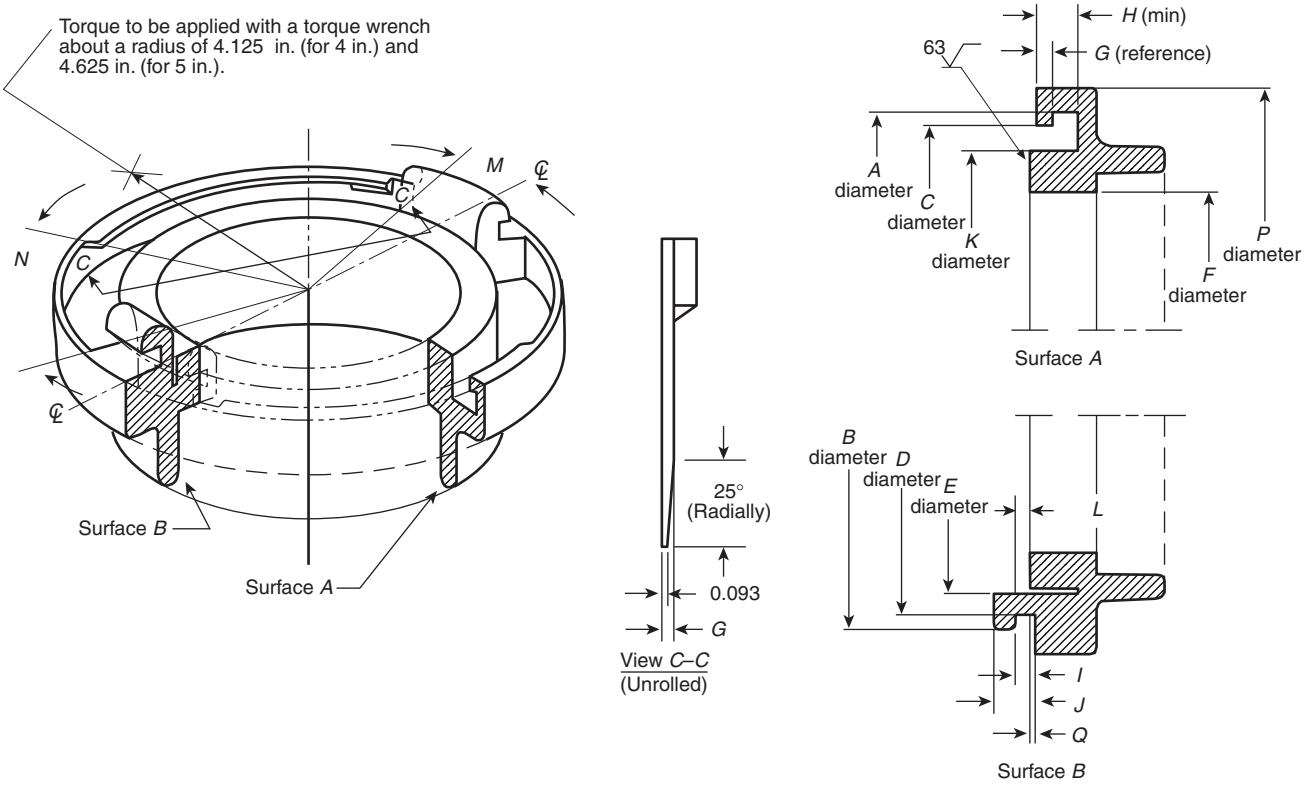

Size	*A*	*B*	*C*	*D*	*E*	*F*	*G*	*H*	*I*	*J*	*K*	*L*	*M*	*N*	*P*	*Q*
4 in.	5.500	5.472	5.197	5.118	4.528	3.500	0.190	0.576	0.236	0.532	4.500	0.2130	15°	35°	6.142	0.0230
5 in.	6.957	6.929	6.575	6.496	5.826	4.500	0.220	0.653	0.295	0.622	5.750	0.2575	16°	36°	7.717	0.0375

Note 1: All linear measurements in inches. Tolerances: .XXXX = ±0.002 in.
Note 2: All dimensions are to be the same for similar configurations on the gauge.

FIGURE 6.2.1(a) Dimensions for Type A Test Gauge (No Ramp Angle).

--`,,,-`-`,,`,,`,`,,`---
Copyright National Fire Protection Association
Provided by IHS under license with NFPA
No reproduction or networking permitted without license from IHS
Not for Resale

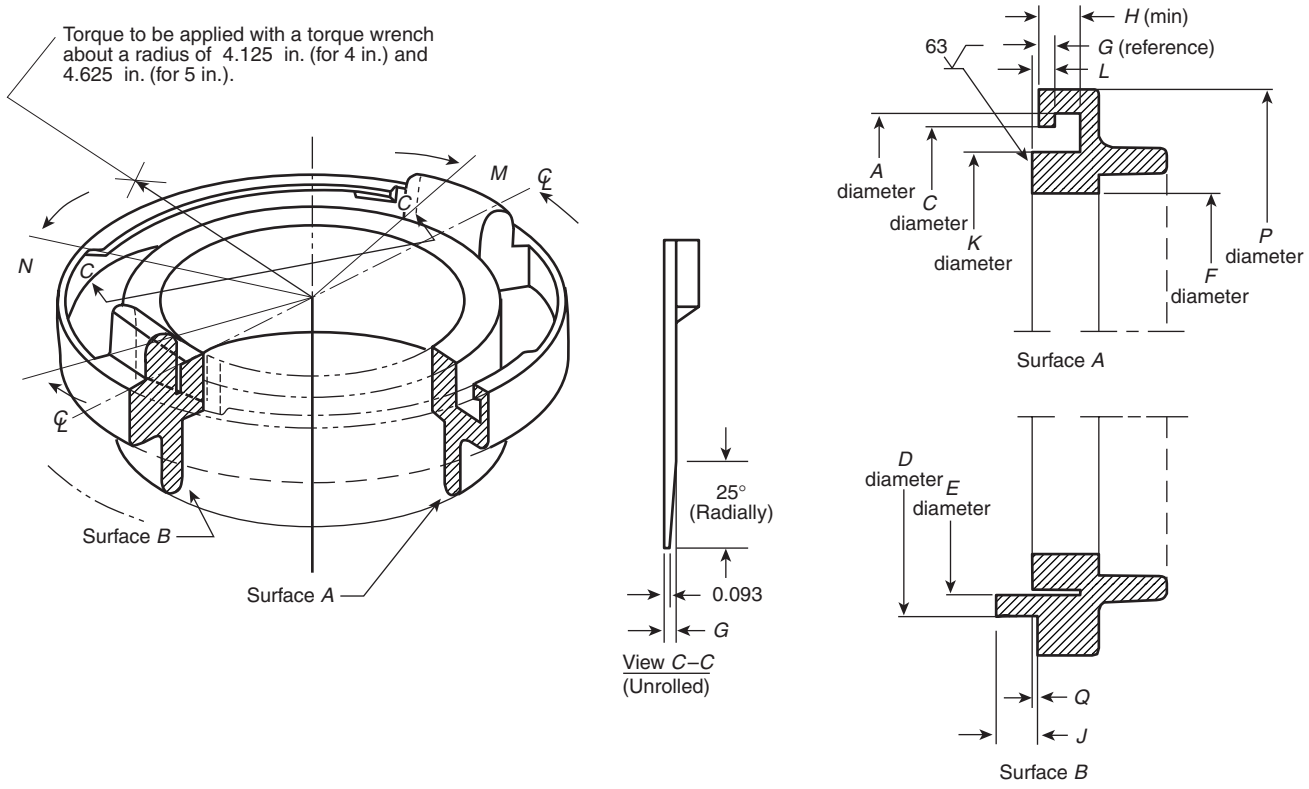

Size	*A*	*C*	*D*	*E*	*F*	*G*	*H*	*J*	*K*	*L*	*M*	*N*	*P*	*Q*
4 in.	5.500	5.197	5.118	4.528	3.500	0.190	0.576	0.532	4.500	0.2130	15°	35°	6.142	0.0230
5 in.	6.957	6.575	6.496	5.826	4.500	0.220	0.653	0.622	5.750	0.2575	16°	36°	7.717	0.0375

Note 1: All linear measurements in inches. Tolerances: .XXXX = ±0.005 in.; .XXX = ±0.002 in.
Note 2: All dimensions are to be the same for similar configurations on the gauge.

FIGURE 6.2.1(b) Dimensions for Type B Test Gauge (with Lugs Removed).

6.3.3 The locks shall be designed so as to lock automatically when connecting two nonthreaded connections without additional action needed to engage the locks. The lock shall not be capable of being secured (mechanically) in the open (unlocked) position.

6.3.4 The locks shall be field repairable.

6.3.5 The locks shall be designed so as to be disengaged by hand in a separate action other than that needed to disconnect the nonthreaded connection.

6.3.5.1 The locks shall be capable of being unlocked by a fire fighter wearing gloves meeting the requirements of NFPA 1971, *Standard on Protective Ensemble for Structural Fire Fighting*.

6.3.5.2 A device such as a wrench incorporating actions to disengage the lock and disconnect the nonthreaded connection in one motion shall be permitted to be used.

6.3.6 The lock mechanism shall not shear when a force of 300 lb × ft (407 N × m) is applied at the nut on the test wrench.

6.4 Indicators. Permanent indicators, obvious to sight and touch, shall be located at two points 180 degrees apart, as shown on Figure 6.2.2(a) and Figure 6.2.2(b), to indicate the fully engaged position of the connections.

6.5 Force to Connect and Disconnect.

6.5.1* All nonthreaded pressure connections shall be capable of connection and disconnection to both the Type A and the Type B metal-face test gauges at a force of between 6.0 lb × in. (0.68 N × m) and 30 lb × in. (3.4 N × m) when measured as described in 6.5.3 and under the conditions described in 6.5.4. The force to connect and disconnect nonthreaded pressure connections to each other shall not exceed 40 lb × in. (4.5 N × m) when measured as described in 6.5.3 and under the conditions described in 6.5.4.

Copyright National Fire Protection Association
Provided by IHS under license with NFPA
No reproduction or networking permitted without license from IHS
Not for Resale

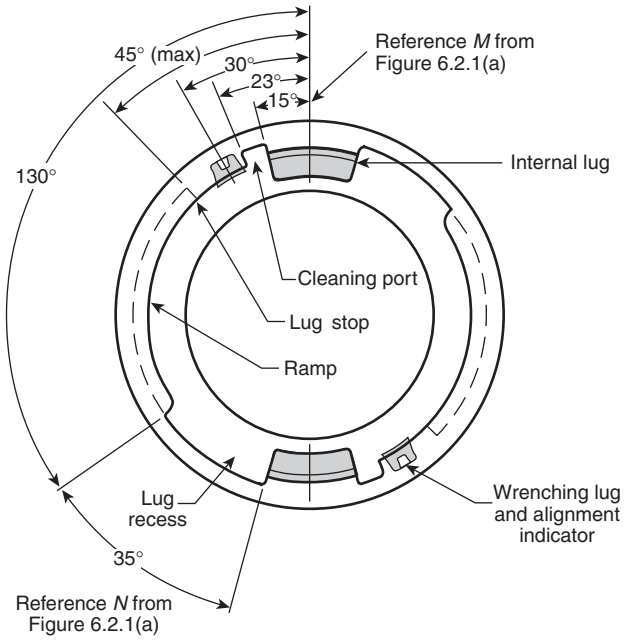

Note: All dimensions are to be the same for similar configurations on the gauge.

FIGURE 6.2.2(a) End View of 4 in. (100 mm) Metal-Face Gauge and Nonthreaded 4 in. (100 mm) Connections.

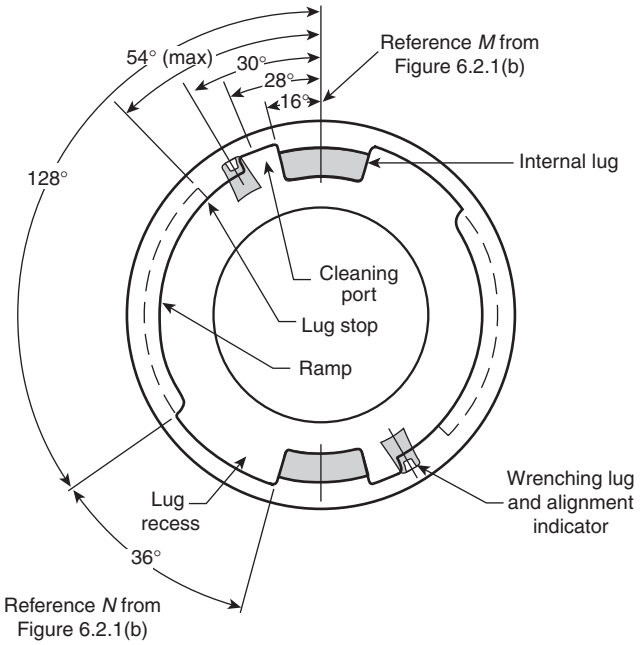

Note: All dimensions are to be the same for similar configurations on the gauge.

FIGURE 6.2.2(b) End View of 5 in. (125 mm) Metal-Face Gauge and Nonthreaded 5 in. (125 mm) Connections.

6.5.2 All nonthreaded suction connections shall be capable of connection and disconnection to both the Type A and the Type B metal-face test gauges at a force of between 168 lb × in. (19.0 N × m) and 312 lb × in. (35.3 N × m) when measured as described in 6.5.3 and under the conditions described in 6.5.4. The force to connect and disconnect nonthreaded suction connections to each other shall not exceed 360 lb × in. (40.7 N × m) when measured as described in 6.5.3 and under the conditions described in 6.5.4.

6.5.3* The force to connect and disconnect shall be tested as follows.

6.5.3.1 One of the metal-face test gauges, or one-half of a pressure or suction connector, depending on the force to be checked, shall be secured in a vise or similar device. The connector to be tested shall be free to turn without constraint or assistance.

6.5.3.2 For 4 in. (100 mm) connectors, a test wrench with dimensions as shown in Figure 6.5.3.2(a) shall be attached over the external lugs of the connector being tested. For 5 in. (125 mm) connectors, a test wrench with dimensions as shown in Figure 6.5.3.2(b) shall be attached over the external lugs of the connector to be tested.

6.5.3.3 A standard torque wrench measuring inch-pounds shall be connected to the test wrench.

6.5.3.4 The torque wrench shall be moved in the direction necessary to connect or disconnect the connector being tested.

6.5.3.4.1 The lock shall be held open only when the connector is being disconnected.

6.5.3.4.2 The torque wrench shall be in direct line with the center of the connector when the torque reading is being taken.

6.5.4 The force to connect and disconnect test shall be done at 70°F (21°C) ambient temperature. The gaskets shall be clean but not lubricated.

6.6 Caps. All nonthreaded caps shall have suction gaskets installed.

6.7 Adapters. All nonthreaded adapters shall have pressure gaskets installed.

6.8 Metal-Face Hydrant Connections.

6.8.1 All nonthreaded, metal-face hydrant connections shall be made to the dimensions specified in Figure 6.8.1.

6.8.2 In addition, 4 in. (100 mm) metal-face hydrant connections shall meet the dimensional characteristics of Figure 6.2.2(a), and the 5 in. (125 mm) metal-face connections shall meet the dimensional characteristics of Figure 6.2.2(b).

Copyright National Fire Protection Association
Provided by IHS under license with NFPA
No reproduction or networking permitted without license from IHS
Not for Resale

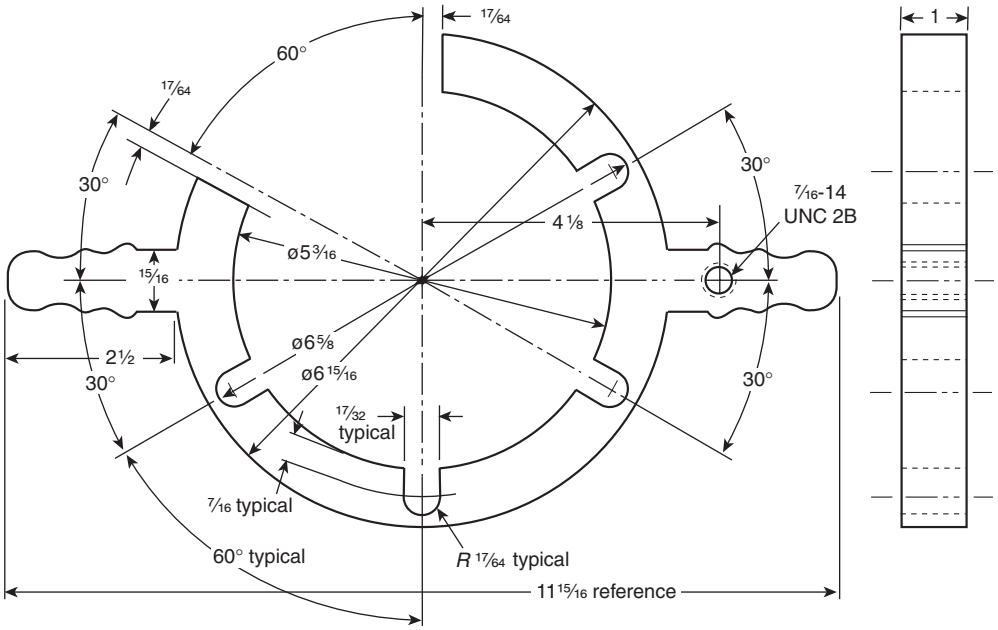

Note 1: Use 7/16-14 UNC 2A × 1-in. long hex head cap screw to connect torque wrench socket to.
Note 2: Unless otherwise specified, tolerance shall be decimals: X.XXX ±0.005; fractions: ±1/64.

Drawing units = inches
Angles = ±½ degree
125 micro-inch finish on all machine surfaces.
Do not scale drawing.

FIGURE 6.5.3.2(a) Test Wrench for Force to Connect Test of 4 in. (100 mm) Connectors.

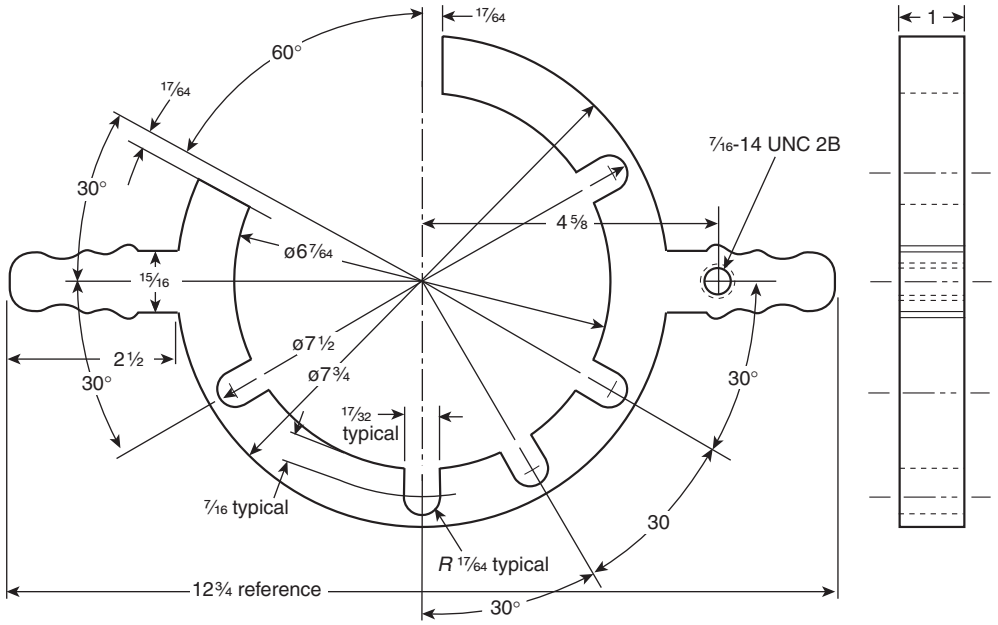

Note 1: Use 7/16-14 UNC 2A × 1-in. long hex head cap screw to connect torque wrench socket to.
Note 2: Unless otherwise specified, tolerance shall be decimals: X.XXX ±0.005; fractions: ±1/64.

Drawing units = inches
Angles = ±½ degree
125 micro-inch finish on all machine surfaces.
Do not scale drawing.

FIGURE 6.5.3.2(b) Test Wrench for Force to Connect Test of 5 in. (125 mm) Connectors.

--`,,,`-`-`,,`,,`,`,,`---

Copyright National Fire Protection Association
Provided by IHS under license with NFPA
No reproduction or networking permitted without license from IHS
Not for Resale

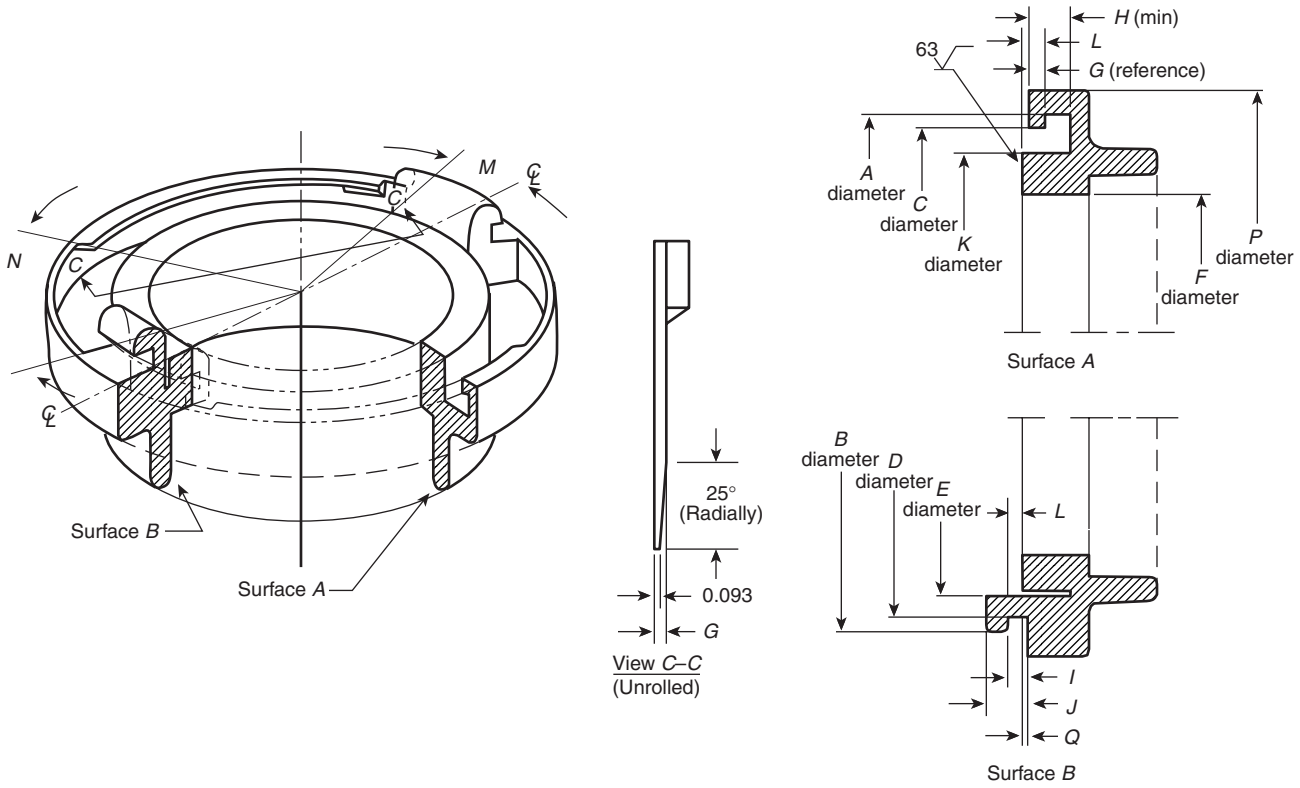

Size	*A*	*B*	*C*	*D*	*E*	*F*	*G*	*H*	*I*	*J*	*K*	*L*	*M*	*N*	*P*	*Q*
4 in.	5.500	5.472	5.197	5.118	4.528	3.500	0.190	0.576	0.236	0.532	4.500	0.2130	15°	35°	6.142	0.0230
5 in.	6.957	6.929	6.575	6.496	5.826	4.500	0.220	0.653	0.295	0.622	5.750	0.2575	16°	36°	7.717	0.0375

Note 1: All linear dimensions in inches. Tolerances: .XXXX = ±0.002 in.; .XXX = ±0.005 in.
Note 2: Attachment to hydrant — as specified by purchaser.
Note 3: All dimensions are to be the same for similar configurations on the hydrant connection.

FIGURE 6.8.1 Metal-Face Hydrant Connection Showing Required Dimensions.

Chapter 7 Gaskets

7.1 Threaded Coupling Gasket.

7.1.1 Each internal connection shall be provided with a resilient thread gasket that does not leak under normal use when fitted accurately in the seat specified in this standard.

7.1.2 Each thread gasket shall meet the dimensions specified in Table 7.1.2.

7.1.3 The durometer of the thread gasket shall be 70 ± 5 Shore A.

7.2 Nonthreaded Coupling Gaskets.

7.2.1 Each nonthreaded connection shall be fitted with a resilient face gasket that does not leak under normal use.

7.2.2 The durometer of the gasket shall be 70 ± 5 Shore A.

7.2.3 The face gasket shall be either a suction gasket or a pressure gasket, depending on the application in which the coupling is to be used.

7.2.3.1 Pressure gaskets shall be designed to withstand the pressure requirements of Sections 4.6 and 4.10 without leakage. They shall be black in color.

7.2.3.2 Suction gaskets shall be designed to allow couplings equipped with the gasket to meet the requirements of Section 4.11. They shall be gray in color.

7.3* Tail Gasket.

7.3.1 Each coupling that is installed on a fire hose with an expansion ring shall be equipped with a resilient gasket of durometer 60 ± 5 Shore A in the hose bowl that keeps the ends of the fabric of the fire hose dry.

7.3.2 The nominal dimensions of these gaskets shall be as follows:

(1) Minimum inside diameter as specified in Table 7.1.2
(2) Outside diameter to accurately fit the recess provided
(3) Thickness 3⁄16 in. (4.8 mm) minimum

Copyright National Fire Protection Association
Provided by IHS under license with NFPA
No reproduction or networking permitted without license from IHS
Not for Resale

Table 7.1.2 Dimensions of Thread Gaskets for Standard Internal Threaded Connections

Nominal Size of Connection	Inside Diameter	Outside Diameter	Thickness
¾	1 3/16 (20.6)	1 7/16 (36.5)	⅛ (3.18)
1	1 1/16 (27)	1 7/16 (36.5)	⅛ (3.18)
1½	1 9/16 (40)	2 1/16 (52)	⅛ (3.18)
2½	2 9/16 (65)	3 3/16 (81)	3/16 (4.8)
3	3 1/16 (78)	3¾ (95)	¼ (6.4)
3½	3 9/16 (91)	4⅜ (111)	¼ (6.4)
4	4 1/16 (103)	5⅛ (130)	¼ (6.4)
4½	4 9/16 (117)	5⅞ (149)	¼ (6.4)
5	5 1/16 (129)	6⅜ (162)	¼ (6.4)
6	6 1/16 (154)	7⅛ (181)	¼ (6.4)
8	8 1/16 (205)	9⅛ (232)	¼ (6.4)

Note: All dimensions are in inches (mm).

Chapter 8 Use of NH Threads and Nonthreaded Connections

8.1* Hose Coupling Threads.

8.1.1* ¾ in. and 1 in. (19 mm and 25 mm) Hose. All ¾ in. and 1 in. (19 mm and 25 mm) hose shall be provided with couplings having the 0.75-8 NH standard thread and 1-8 NH standard thread, respectively.

8.1.2 1½ in. through 2 in. (38 mm through 52 mm) Fire Hose. All 1½ in. through 2 in. (38 mm through 52 mm) fire hose shall be provided with couplings having the 1.5-9 NH standard thread.

8.1.3 2½ in. (65 mm) Fire Hose. All 2½ in. (65 mm) fire hose shall be provided with couplings having the 2.5-7.5 NH standard thread.

8.1.4 3 in. (75 mm) Fire Hose. All 3 in. (75 mm) fire hose shall be provided with couplings having the 2.5-7.5 NH standard thread for interchangeability with 2½ in. (65 mm) fire hose.

8.1.4.1 Where interchangeability with 2½ in. (65 mm) fire hose is not a factor, the couplings shall be permitted to have the 3-6 NH standard thread.

8.1.5 3½ in. (90 mm) Fire Hose. All 3½ in. (90 mm) fire hose shall be provided with couplings having the 3.5-6 NH standard thread.

8.1.5.1 Where interchangeability with 3 in. (75 mm) fire hose or other connections is required, the couplings shall be permitted to have the 3-6 NH standard thread.

8.1.6 4 in. (100 mm) Fire Hose. All 4 in. (100 mm) fire hose shall be provided with couplings having the 4-4 NH standard thread.

8.1.6.1 Where interchangeability with 3½ in. (90 mm) fire hose or other connections is required, the couplings shall be permitted to have the 3.5-6 NH standard thread.

8.1.6.2 Where the authority having jurisdiction permits, 4 in. (100 mm) nonthreaded couplings shall be permitted to be used.

8.1.7 4½ in. (114 mm) Fire Hose. All 4½ in. (114 mm) fire hose shall be provided with couplings having the 4.5-4 NH standard thread.

8.1.7.1 Where interchangeability with 4 in. (100 mm) fire hose or other connections is required, the couplings shall be permitted to have the 4-4 NH standard thread.

8.1.8 5 in. (125 mm) Fire Hose. All 5 in. (125 mm) fire hose shall be provided with couplings having the 5-4 NH standard thread.

8.1.8.1 Where interchangeability with 4½ in. (114 mm) fire hose or other connections is required, the couplings shall be permitted to have the 4.5-4 NH standard thread.

8.1.8.2 Where the authority having jurisdiction permits, 5 in. (125 mm) nonthreaded couplings shall be permitted to be used.

8.1.9 6 in. (150 mm) Fire Hose. All 6 in. (150 mm) fire hose shall be provided with couplings having the 6-4 NH standard thread.

8.1.9.1 Where interchangeability with 5 in. (125 mm) fire hose or other connections is required, the couplings shall be permitted to have the 5-4 NH standard thread.

8.1.10 8 in. (200 mm) Fire Hose. All 8 in. (200 mm) fire hose shall be provided with couplings having the 8-4 NH standard thread.

8.1.11* Hard Suction Hose. Hard suction hose shall be provided with couplings having the NH standard thread compatible with the nominal size of the hard suction hose.

8.2* Connections for Fire Service Nozzles for Handlines.

8.2.1 Playpipes for connecting shutoff nozzles to 2½ in. (65 mm) fire hose shall have the 2.5-7.5 NH standard thread at the base or primary inlet and the 1.5-9 NH standard thread at the discharge end, as shown in Figure 8.2.1.

8.2.2 Nozzle shutoff valves for either 2½ in. (65 mm) nozzles or 1½ in. (38 mm) nozzles shall have the 1.5-9 NH standard thread for both the inlet and discharge sides of the valve, as shown in Figure 8.2.1 for 2½ in (65 mm) and Figure 8.2.2 for 1½ in. (38 mm).

8.2.2.1 Where the valve is an integral nondetachable part of a 2½ in. (65 mm) playpipe, the 1.5-9 NH standard thread shall be provided only on the discharge side of the valve.

8.2.3 All nozzles used on booster hose shall have the 1-8 NH standard thread.

Copyright National Fire Protection Association
Provided by IHS under license with NFPA
No reproduction or networking permitted without license from IHS
Not for Resale

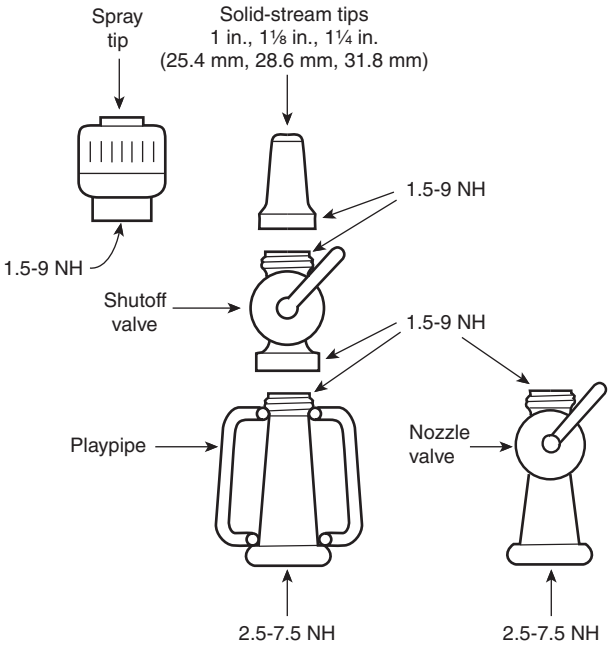

FIGURE 8.2.1 Nozzle Assembly for 2½ in. (65 mm) Hose.

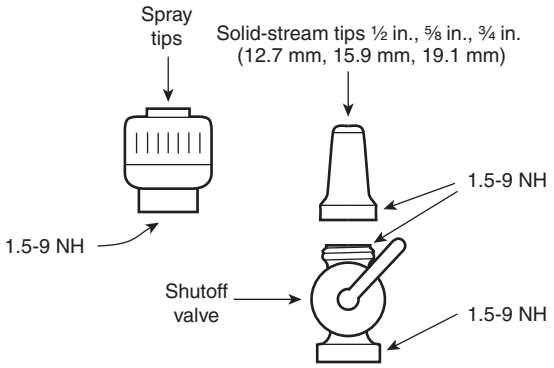

FIGURE 8.2.2 Nozzle Assembly for 1½ in. (38 mm) Hose.

8.2.4 All nozzle tips for use on 2½ in. (65 mm) and 1½ in. (38 mm) nozzles shall have the 1.5-9 NH standard thread.

8.2.5* All spray nozzles with a shutoff valve for use on 1½ in. (38 mm) and 2½ in. (65 mm) hose where flows at rated pressure do not exceed 400 gpm (1600 L/min) shall have at least 1.5-9 NH standard thread at the internal connection.

8.3 Connections for Large-Stream Devices.

8.3.1* Primary Inlet. At least one inlet connection on each fire department large-stream device equipped with multiple primary inlets (other than devices piped permanently to a pump) shall be fitted with at least one female swivel connection, which shall have 2.5-7.5 NH standard thread as shown in Figure 8.3.1(a) and Figure 8.3.1(b). An adapter shall be permitted to be provided to meet this intent.

8.3.2* Subsequent Connections and Nozzles.

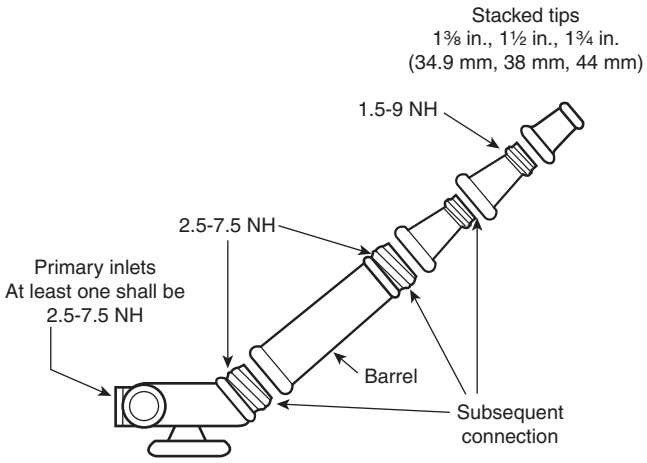

FIGURE 8.3.1(a) Large-Stream Device Rated Under 1250 gpm (5000 L/min).

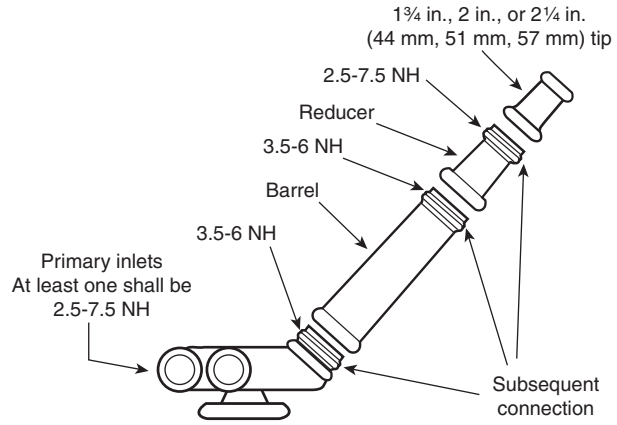

FIGURE 8.3.1(b) Large-Stream Device Rated Over 1250 gpm (5000 L/min) But Less Than 3000 gpm (12,000 L/min).

8.3.2.1 The discharge end of large-stream devices designed to discharge from 400 gpm to 1250 gpm (1600 L/min to 5000 L/min) shall have the 2.5-7.5 NH thread for attaching straight tip nozzle tips or spray nozzles.

8.3.2.1.1 If stacked straight tip nozzles are used, one of the tips shall have the 1.5-9 NH thread as shown in Figure 8.3.1(a).

8.3.2.1.2 Straight tip nozzles and spray nozzles designed to discharge between 400 gpm and 1250 gpm (1600 L/min and 5000 L/min) shall have 2.5-7.5 NH thread on their inlet.

8.3.2.2 The discharge end of large-stream devices designed to discharge in excess of 1250 gpm (5000 L/min) but less than 3000 gpm (12,000 L/min) shall have the 3.5-6 NH thread for attaching straight tip nozzles or spray nozzles.

8.3.2.2.1 A 3.5-6 NH female × 2.5-7.5 NH male reducer fitting, or a stacked tip having the male 2.5-7.5 NH thread as an integral component as shown in Figure 8.3.1(b) shall be provided.

Copyright National Fire Protection Association
Provided by IHS under license with NFPA
No reproduction or networking permitted without license from IHS
Not for Resale

8.3.2.2.2 Straight tip nozzles and spray nozzles designed to discharge flows in excess of 1250 gpm (5000 L/min) but less than 3000 gpm (12,000 L/min) shall have 3.5-6 NH thread on their inlet.

8.3.2.3 Subsequent connections, straight tip nozzles, and spray nozzles on large-stream devices designed to discharge 3000 gpm (12,000 L/min) or more shall have an NH standard thread consistent with the nominal inlet or outlet size.

Annex A Explanatory Material

Annex A is not a part of the requirements of this NFPA document but is included for informational purposes only. This annex contains explanatory material, numbered to correspond with the applicable text paragraphs.

A.1.1 Some fire-fighting organizations use small hose less than ¾ in. (19 mm) nominal diameter fitted with garden hose couplings. Such couplings should have 0.75-11.5 NH (garden hose thread) threads conforming to ANSI/ASME B1.20.7, *Standard on Hose Coupling Screw Threads.*

A.3.2.1 Approved. The National Fire Protection Association does not approve, inspect, or certify any installations, procedures, equipment, or materials; nor does it approve or evaluate testing laboratories. In determining the acceptability of installations, procedures, equipment, or materials, the authority having jurisdiction may base acceptance on compliance with NFPA or other appropriate standards. In the absence of such standards, said authority may require evidence of proper installation, procedure, or use. The authority having jurisdiction may also refer to the listings or labeling practices of an organization that is concerned with product evaluations and is thus in a position to determine compliance with appropriate standards for the current production of listed items.

A.3.2.2 Authority Having Jurisdiction (AHJ). The phrase "authority having jurisdiction," or its acronym AHJ, is used in NFPA documents in a broad manner, since jurisdictions and approval agencies vary, as do their responsibilities. Where public safety is primary, the authority having jurisdiction may be a federal, state, local, or other regional department or individual such as a fire chief; fire marshal; chief of a fire prevention bureau, labor department, or health department; building official; electrical inspector; or others having statutory authority. For insurance purposes, an insurance inspection department, rating bureau, or other insurance company representative may be the authority having jurisdiction. In many circumstances, the property owner or his or her designated agent assumes the role of the authority having jurisdiction; at government installations, the commanding officer or departmental official may be the authority having jurisdiction.

A.4.1 Figure A.4.1(a) shows an expansion ring coupling set for a set of threaded couplings. Figure A.4.1(b) shows a typical nonthreaded fire hose connection that connects to the fire hose with a tailpiece and external reattachable collar.

A.5.1.5 Blunt starts are required on the entering ends of the NH screw thread on all sizes of fire hose connections that meet the requirements of NFPA 1963. The blunt start is formed by cutting off the entering ends of the screw threads completely to where, at the blunt start, the dimension from the face of the connection to the root of the start of the second thread is as specified in Table 5.4.2 (Column I for external threads and Column J for internal threads), as illustrated in Figure 5.1.5.1.

When the entering threads are cut back as required, it forms a pilot on the male coupling and a counter bore in the female coupling, making it easier to align the connections and start the thread engagement.

When the starting ends of the threads are cut off, the following occur:

(1) It takes fewer turns to connect the connection — over one turn less on a 2½ in. (65 mm) connection.
(2) There are no threads at the ends of the connections to be damaged when dropped.
(3) The sharp entering threads are gone, reducing cuts to hands.

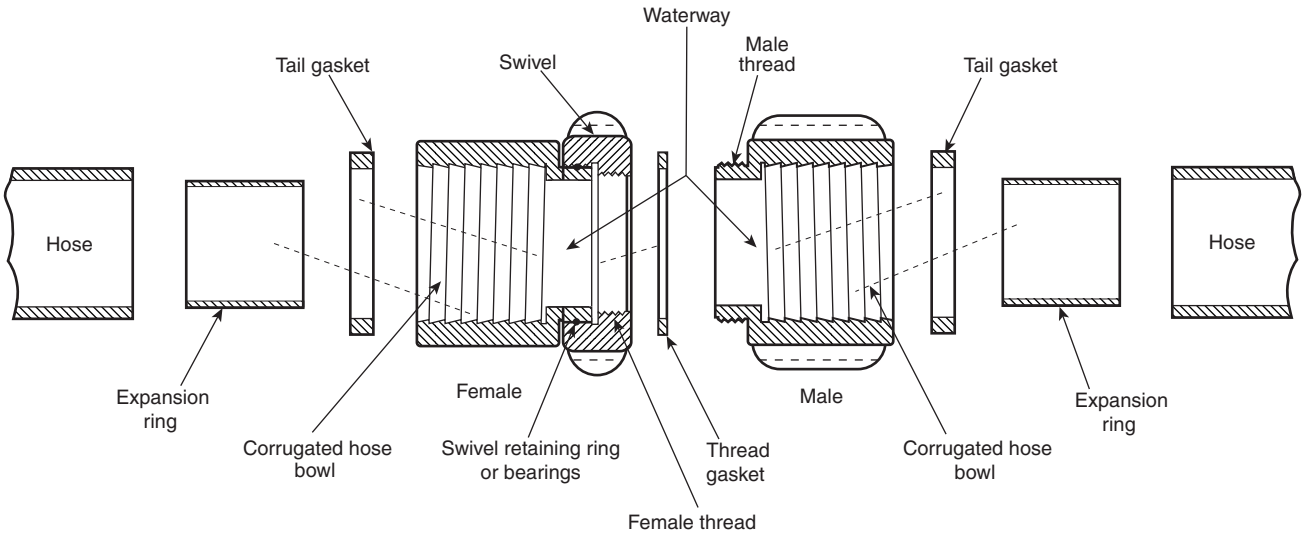

FIGURE A.4.1(a) An Expansion Ring Coupling Set.

Copyright National Fire Protection Association
Provided by IHS under license with NFPA
No reproduction or networking permitted without license from IHS
Not for Resale

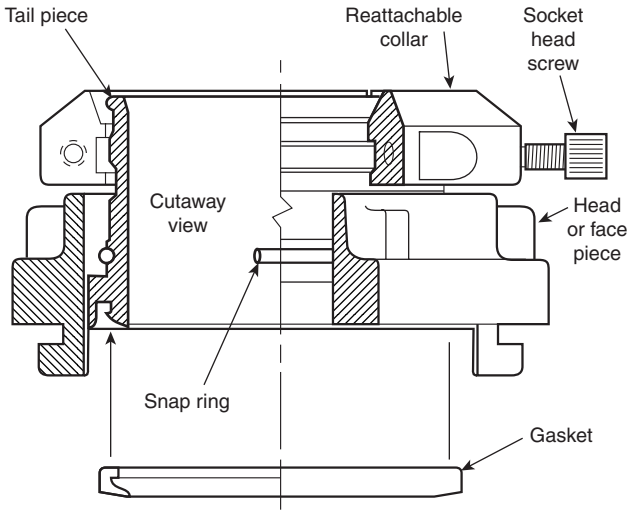

FIGURE A.4.1(b) A Nonthreaded Fire Hose Connection.

A good blunt start does the following:

(1) Helps ream dirt out of the threads when a coupling has been dropped in the dirt
(2) Prevents cross-threading
(3) Makes it easier and faster to connect fire hose connections

A.5.2.1 American National Fire Hose Connection Screw Threads are also sometimes known by the abbreviations NST and NS.

A.5.6.3 See Figure A.5.6.3.

A.5.6.4 Note that setting plug gauges is necessary only for setting of adjustable thread ring gauges and for checking solid ring gauges.

A.6.1 Figure A.6.1 shows the names of the various parts of a nonthreaded coupling.

A.6.2 The Type A test gauge checks the distance from under the high point of the two ramps of a nonthreaded connection to the corresponding connection's gasket face, which is at the centerline between the gauge and the connection when they are connected. The Type B test gauge checks the distance from under the two lugs of a nonthreaded connection to the corresponding connection's gasket face, which is at the centerline between the gauge and the connection when they are connected.

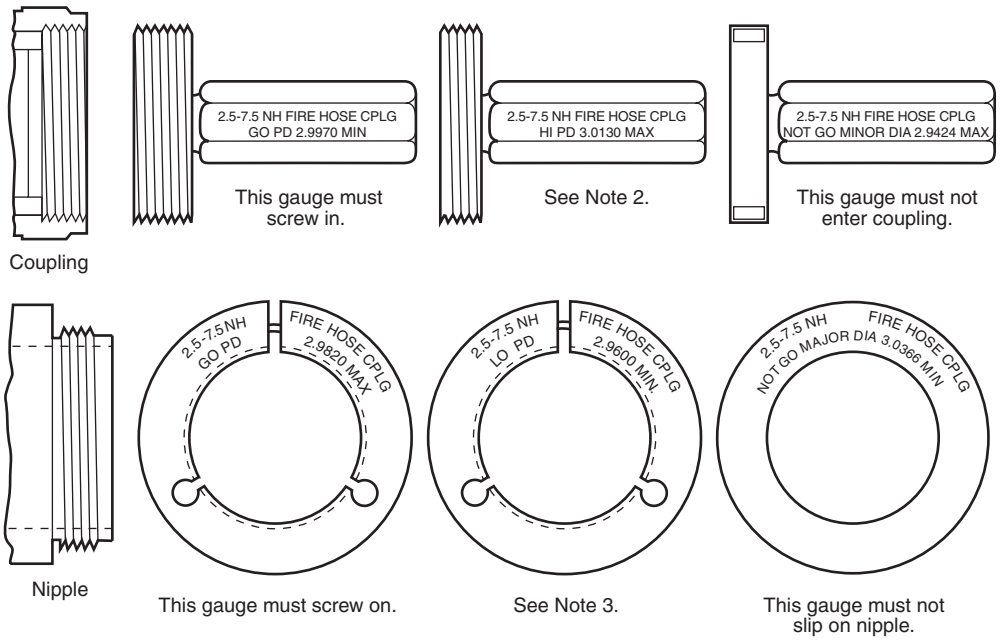

[See Tables 5.6.1(b) and 5.6.1(c) for complete dimensions for these gauges.]

Note 1: The GO plain ring gauge and the GO plain plug gauge have not been included in this figure since the sharpness of the crests of the external and internal threads will be considered generally acceptable if the GO thread ring gauge and the GO thread plug gauge assemble on the two mating parts of the coupling.

Note 2: Internal threads are acceptable when the HI thread plug is applied to the coupling thread if (a) it does not enter, or if (b) all complete coupling threads can be entered, provided that a definite drag (from contact with the coupling material) results on or before the second turn of entry. The gauge should not be forced after the drag becomes definite.

Note 3: External threads are acceptable when the LO thread ring gauge is applied to the nipple thread if (a) it is not entered, or if (b) all complete nipple threads can be entered, provided that a definite drag (from contact with the nipple material) results from contact on or before the second turn of entry. The gauge should not be forced after the drag is definite.

FIGURE A.5.6.3 Gauges for 2.5-7.5 NH Threads.

Copyright National Fire Protection Association
Provided by IHS under license with NFPA
No reproduction or networking permitted without license from IHS
Not for Resale

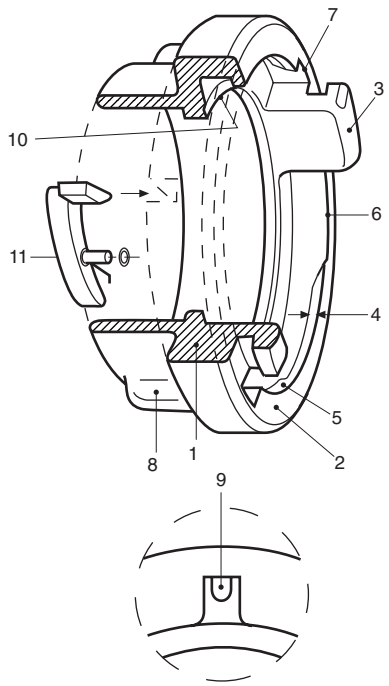

Legend:
1. Circumferential O.D.: The largest outer diameter of connection that protects the connection from damage.
2. Coupling face: The front part of the connection from which dimensions are developed.
3. Internal lug: The two internal lugs with recesses that fit on the ramp under the face of the cam head.
4. Ramp: The inclined plane under the face of the cam head that, when turned clockwise, increases pressure on lip seals.
5. Lug stop: The stop at the end of the ramp that the internal lug comes against.
6. Lug recess: Recessed area where opposite internal lugs enter the ramp.
7. Cleaning port: Area on end of connection face where dirt is pushed in by mating lug.
8. External wrenching lug: The external ribs or lugs on back diameter of connection head.
9. External wrenching lug indicator: The identification on rib or lug that, when lined up together, indicates the connection is fully engaged.
10. Tail place recess: The recess counterbore on the interface of the cam head that the tail piece rides in.
11. Lock: To keep the connection from becoming unintentionally disengaged.

FIGURE A.6.1 Diagram of a Nonthreaded Connection.

A.6.3.1 During the transition in a fire department from couplings without locks to couplings with locks, there will be times when hose will be coupled together with one coupling being a locking type and the other a nonlocking type. Because disconnection procedures are different for couplings with locks, consideration should be given to painting a ring in a distinctive color on the hose near the couplings with locks to alert the fire fighter to the presence of the lock.

A.6.5.1 The forces defined in this requirement are intended to provide nonthreaded connections that are able to be connected and disconnected easily by hand and without the use of wrenches when the connectors are not under pressure.

A.6.5.3 Figure A.6.5.3 shows an example of the setup and location of the torque wrench, test wrench, nonthreaded connector, and test gauge.

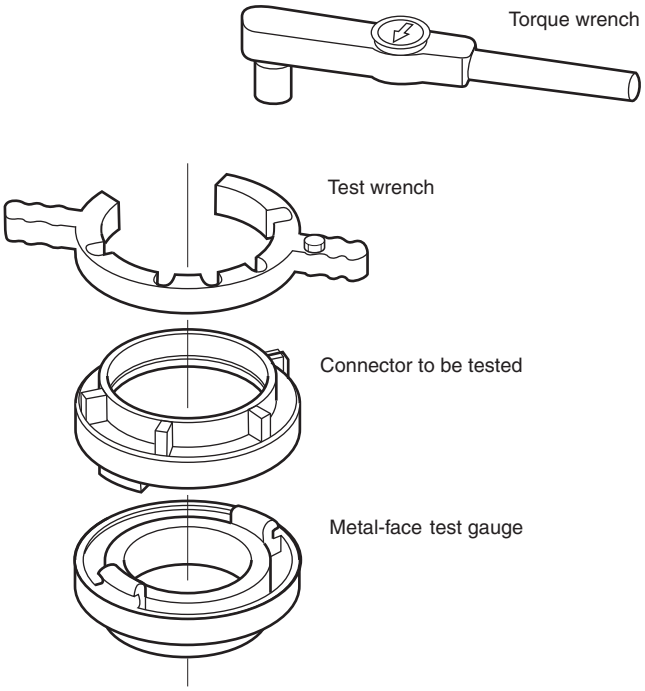

FIGURE A.6.5.3 Arrangement for Testing Nonthreaded Connections.

Other methods of measuring force to connect and disconnect can be used if they produce the same results. A second method of testing the force to connect and disconnect against the test gauges is to fit the metal-face gauge with a plug that has a hex head connection for the torque wrench on the back side of the gauge at the center of rotation. The nonthreaded connector to be tested is then held stationary in a vise or similar device, and the metal-face gauge is mated to the nonthreaded connection with the torque wrench measuring the amount of force to connect and disconnect the two parts. When the force is measured at any point other than as defined in 6.5.3, the acceptable range of force values will need to be calculated for the position of the torque wrench.

A.7.3 It is important when ordering couplings and tail gaskets for recoupling hose with expansion ring couplings that the appropriate tail gasket be obtained. The coupling manufacturer needs the outside diameter of the hose and the wall thickness of the hose to provide the proper coupling and gasket. Also, the length of the expansion ring must be consistent with the length of the coupling bowl.

A.8.1 Where local fire hose coupling threads are not standard, swivel adapters, with the NH female thread and the local male thread, and with the local female thread and the NH male thread, should be carried on the apparatus, stored in hose houses, and so forth.

A.8.1.1 Some fire-fighting organizations use small hose less than ¾ in. (19 mm) nominal diameter fitted with garden hose couplings. Such couplings should have 0.75-11.5 NH (garden hose thread) threads conforming to ANSI/ASME B1.20.7, *Standard on Hose Coupling Screw Threads.*

A.8.1.11 Where the hydrant connections have local threads, adapters with the NH male thread and the local female thread for intake supply hose, and the NH female thread and the

Copyright National Fire Protection Association
Provided by IHS under license with NFPA
No reproduction or networking permitted without license from IHS
Not for Resale

local female thread for hard suction hose, should be provided. Where in-service hard suction hose has couplings that are of a different size, or has threads other than the NH standard, an adapter to the proper size and to the NH standard thread should be provided and attached to the hard suction hose couplings. *(See Figure A.8.1.11.)*

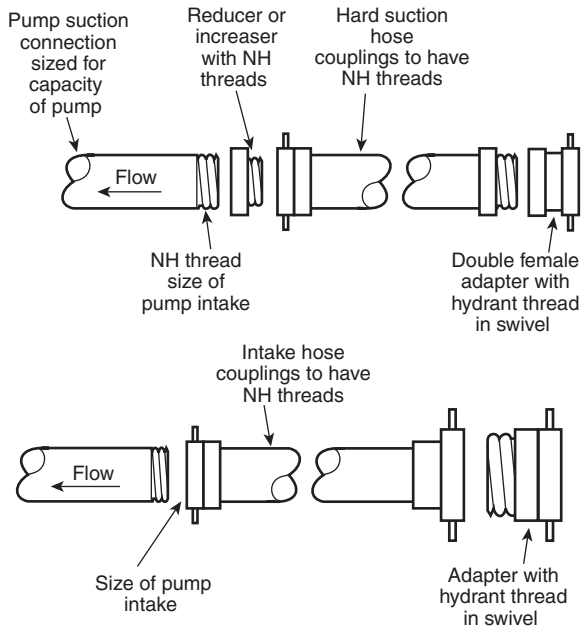

FIGURE A.8.1.11 Suction Inlet for Local Threads.

A.8.2 Connections with NH threads covered in 8.2.1 through 8.2.5 should have adapters with the internal local thread preconnected to the appliance.

The various subsequent connections on a fire service nozzle are designed with standard NH thread to allow the nozzle tip to be removed and hose connected to extend the line. This operation is particularly beneficial when the attack starts with large hand-held lines, and these are later reduced to smaller lines for overhaul.

A.8.2.5 The use of the specified size thread makes it possible to attach these nozzles to any standard 2½ in. (65 mm) or 1½ in. (38 mm) playpipe or shutoff valve and also to advance the nozzle by connecting 1½ in. (38 mm) hose between the valve and the spray nozzle.

A.8.3.1 Fire department large-stream devices with a single large-diameter input are designed to rely on the positioning of the hose for part of the device's stability . The manufacturer's instructions for use should be carefully followed with all large-stream devices. A device designed with a single hose-line inlet system is different from a device designed with a multiline inlet system, and trying to supply one device with adapters and fittings from different size hose can create a dangerous situation.

A.8.3.2 A flow of 400 gpm (1600 L/min) is the maximum normally obtained with a handline nozzle using a standard 1¼ in. (32 mm) straight tip nozzle. A flow of 1250 gpm (5000 L/min) is the maximum normally obtained with a portable turret nozzle using a 2 in. (51 mm) straight tip nozzle.

Annex B History of Fire Hose Coupling Thread Standardization in the United States

This annex is not a part of the requirements of this NFPA document but is included for informational purposes only.

B.1 The need for securing uniformity and interchangeability of fire hose coupling threads was demonstrated by the Boston conflagration of November 1872. The following year, standardization was proposed by the International Association of Fire Engineers (IAFE), now the International Association of Fire Chiefs (IAFC). In subsequent years, various suggested standard threads were considered. A special committee of the IAFE prepared a report adopted by its 1891 convention in which the present principal dimensions for 2½ in. fire hose coupling screw threads were suggested, but no specifications for the shape of thread were included.

Little more was done toward standardization until difficulties with nonstandard threads were encountered by fire departments called to assist at the Baltimore conflagration of 1904. The following year, the National Fire Protection Association (NFPA) took up the project actively, appointing a Committee on Standard Thread for Fire Hose Couplings. The committee developed general screw thread specifications covering the 2½ in., 3 in., 3½ in., and 4½ in. sizes, using as a basis the earlier report of the IAFE committee and working with the active cooperation of the American Water Works Association (AWWA). The principal dimensions for the 2½ in. couplings of 7½ threads per inch and 3$^{1}/_{16}$ in. outside diameter of the external thread (ODM) were selected to facilitate conversion of existing couplings, the majority of which had either 7 or 8 threads per inch, and 3 in. or 3⅓ in. ODM.

During the years that followed until 1917, the committee worked diligently to secure recognition of these specifications as a "National Standard" and their adoption by cities and towns throughout the United States. Its efforts were rewarded with considerable success, and, in addition, as many as 20 organizations officially approved and adopted the standard. It was also published by the National Board of Fire Underwriters (NBFU) in 1911, the American Society of Mechanical Engineers (ASME) in 1913, the U.S. Bureau of Standards as Circular No. 50 (1914 and 1917), and the AWWA.

Between 1920 and 1923, a series of conferences were held that were attended by representatives of the manufacturers of fire hose couplings, the NFBU, the National Screw Thread Commission (NSTC), and the ASME. These resulted in an agreement concerning the standardization of screw thread tolerances, allowances, and methods of gauging. Efforts to bring about the general adoption of the standard throughout the country were continued.

In October 1923, NBFU, NFPA, and ASME asked the American Standards Association (ASA) to approve and designate this standard as an "American Standard." Shortly afterwards, ASA assigned joint sponsorship for the project to NBFU, AWWA, and ASME. At that time, through the cooperation of a group of gauging experts, including members of NSTC, the limiting dimensions were added to the original specifications, and the standard for fire hose coupling screw threads for sizes 2½ in. and larger was approved by the ASA in May 1925.

In 1917, by mutual agreement, the field work of the NFPA committee concerned with encouraging adoption and application of the standard was taken over by a Committee on Fire Prevention and Engineering Standards of the NBFU. At the same time, NFPA organized a Committee on Small Hose Couplings to develop standards on fire hose screw threads in sizes

Copyright National Fire Protection Association
Provided by IHS under license with NFPA
No reproduction or networking permitted without license from IHS
Not for Resale

from ½ in. to 2 in. nominal diameters. A standard covering these sizes was developed and adopted by NFPA in 1922. These smaller size couplings had the same general characteristics of thread design as the standard couplings for 2½ in. and larger hose. The NFPA's *Standard for Small Hose Coupling Screw Threads* was submitted to the ASA for approval in 1926 and is the basis for the current fire hose screw thread dimensions included in this standard.

The National Screw Thread Commission also had prepared dimensions for the screw threads of small hose couplings ½ in. to 2 in., inclusive, which were published in 1921, 1924, and 1928 reports. The pitches and other dimensions of these threads, except for the garden hose size, varied from those proposed by the NFPA for use on fire hose, which requires a heavier thread that can be connected quickly in the field.

In January 1927, the ASME requested that the ASA authorize the organization of a sectional committee to complete the standardization of fire hose couplings and to attempt to unify and complete the dimensions of small hose couplings. A sectional committee was organized in October 1928, under the sponsorship of the ASME, to prepare specifications for screw threads for small hose couplings ranging from ½ in. to 2 in. nominal size. Data on these smaller threads were published by ASA.

Subsequently, it was found that almost every pump manufacturer was using different threads on 4 in., 5 in., and 6 in. supply hose and fittings required on certain sizes of fire department pumping engines, so the supply hose from one pumper could not be used on another pumper at the same time. Accordingly, in 1955, NFPA adopted standards for threads on these three sizes of fire hose.

In 1956, NFPA adopted dimensions for gaskets for standard fire hose couplings of all sizes from ¾ in. to 6 in. couplings, as well as data on the required gasket seat dimensions. Gaskets were felt to be an essential feature of a fire hose coupling standard because hose connections feature swivel or "female" fittings that must provide a tight waterway when connected to the opposing thread.

NFPA also prepared a text showing the suggested application of the standard to various items of fire-fighting equipment because experience had shown that the wrong size of standard thread was sometimes used, limiting the effectiveness of the equipment.

In 1961, the duties of the ASA sectional committee were transferred to a newly established subcommittee of the ASA Sectional Committee on the Standardization of Pipe Threads, for which the ASME and the American Gas Association (AGA) were joint sponsors. The subcommittee was organized to deal with threads for fire hose couplings and fittings. New material from the ASA subcommittee was subsequently included in the NFPA document.

A survey conducted by NFPA in 1965 showed that 65 percent of the fire departments serving U.S. communities with populations greater than 20,000 used standard fire hose coupling screw threads on all sizes of hose. The percentage of fire departments using standard threads on each of the sizes were as follows: ¾ in. and 1 in. threads, 95 percent standard; 1½ in. threads, 84 percent standard; 2½ in. threads, 73 percent standard. The degree of standardization is believed to be considerably higher in smaller communities, many of which organized their fire departments subsequent to the adoption of the standard. Approximately half of the U.S. states have laws supporting fire hose thread standardization.

In 1965, at its 69th annual meeting, the NFPA passed a resolution to intensify its efforts to accomplish complete standardization of fire hose screw threads throughout the country by asking for assistance from all fire chiefs, fire organizations, industrial organizations, manufacturers, and governmental agencies.

The NFPA, the IAFC, the International Association of Fire Fighters, the American National Standards Institute, the AWWA, and many others have assisted on the standardization program.

Annex C Informational References

C.1 Referenced Publications. The following documents or portions thereof are referenced within this standard for informational purposes only and are thus not part of the requirements of this document unless also listed in Chapter 2.

C.1.1 NFPA Publication. National Fire Protection Association, 1 Batterymarch Park, P.O. Box 9101, Quincy, MA 02269-9101.

NFPA 194, *Standard for Screw Threads and Gaskets for Fire Hose Couplings,* 1967 edition.

C.1.2 Other Publication.

C.1.2.1 ANSI Publication. American National Standards Institute, 25 West 43rd Street, 4th floor, New York, NY, 10018.

ANSI/ASME B1.20.7, *Standard on Hose Coupling Screw Threads,* 1991.

C.2 Informational References. (Reserved)

C.3 References for Extracts. (Reserved)

--`,,,-`-`,,`,,`,`,,`---

Copyright National Fire Protection Association
Provided by IHS under license with NFPA
No reproduction or networking permitted without license from IHS
Not for Resale

Index

© 2003 National Fire Protection Association. All Rights Reserved.

The copyright in this index is separate and distinct from the copyright in the document that it indexes. The licensing provisions set forth for the document are not applicable to this index. This index may not be reproduced in whole or in part by any means without the express written permission of NFPA.

-A-

Adapters ..... 1.1 to 1.3
- Definition 3.3.1
- Gasket groove 4.4
- Gasket performance with 4.16
- Internal strength 4.6
- Materials 4.2
- Nonthreaded 6.7
  - Definition 3.3.9
- Screw thread (definition) ..... 3.3.12; *see also* Screw threads
- Swivel 8.3.1, A.8.3.1
- Testing 4.5, 4.6
- Workmanship 4.1, A.4.1

Application of standard 1.4
Approved (definition) 3.2.1, A.3.2.1
Authority having jurisdiction (definition) 3.2.2, A.3.2.2

-B-

Blunt start ..... 5.1.5, Fig. 5.1.5.1, A.5.1.5
- Definition 3.3.2

Bowl gaskets ..... *see* Tail gaskets

-C-

Caps, nonthreaded connection 6.6
Corrosion resistance, coupling 4.12
Coupling assembly (definition) 3.3.3
Couplings ..... 1.1 to 1.3, A.1.1
- Connect/disconnect capability 4.8
- Corrosion resistance 4.12
- Definition 3.3.4
- Gasket groove 4.4
- Gasket performance with 4.16
- High-temperature performance 4.14
- History of fire hose coupling thread standardization in the United States ..... Annex B
- Internal strength 4.6
- Low-temperature performance 4.15
- Materials 4.2
- Minimum waterway 4.3
- Nonmetallic materials 4.13
- Nonthreaded ..... *see* Nonthreaded couplings (connections)
- Retention 4.10
- Rough usage 4.9
- Screw threads ..... *see* Screw threads
- Swivel mechanism, testing of 4.9.2.3, 4.9.2.6
- Tensile strength 4.7
- Testing ..... 4.5 to 4.12, 4.14, 4.15
- Vacuum tightness 4.11
- Workmanship 4.1, A.4.1

-D-

Definitions ..... Chap. 3

-E-

Expansion ring couplings ..... 4.3, 4.12.2, Fig. A.4.1(a)
- Gaskets for 7.3.1, A.7.3

-F-

Face gaskets 7.2
- Definition 3.3.5.2

-G-

Gasket grooves 4.4
Gaskets ..... 4.3, 4.12.2, 4.14.2.1, 4.15.2.1, Chap. 7
- Bowl ..... *see* Tail gasket
- Face 7.2
  - Definition 3.3.5.2
- Nonthreaded coupling (face) 7.2
  - Pressure 7.2.3
  - Suction 7.2.3
- Performance with couplings or adapters 4.16
  - Accelerated aging test 4.16.2
  - Compression set test 4.16.3
  - Low-temperature test 4.16.1
- Tail 7.3, A.7.3
  - Definition 3.3.5.3
- Thread 7.1
  - Definition 3.3.5.4

Gauges
- NH screw threads ..... 5.6, Fig. A.5.6.3, A.5.6.4
  - Plug gauges ..... Table 5.6.1(a), 5.6.4, A.5.6.4
  - Ring gauges ..... Table 5.6.1(a), Table 5.6.1(b), 5.6.4, A.5.6.4
- Nonthreaded connections 6.2, A.6.2
  - Metal-face gauge ..... Fig. 6.2.2(a), Fig. 6.2.2(b)
  - Type A test gauge ..... Fig. 6.2.1(a)
  - Type B test gauge ..... Fig. 6.2.1(b)
- Screw threads ..... Fig. A.5.6.3

-H-

Handlines, nozzle connections for ..... *see* Nozzle connections for handlines
Hard suction hose
- Definition 3.3.6
- Hose coupling threads 8.1.11, A.8.1.11
- Vacuum tightness 4.11

Higbee cut ..... *see* Blunt start
Hose, suction ..... *see* Hard suction hose
Hose couplings ..... *see also* Nozzle connections for handlines
- Nonthreaded ..... Fig. A.4.1(b)
- Threaded 8.1, A.8.1
  - Fire hose ..... 8.1.1 to 8.1.10, A.8.1.1
  - Suction hose 8.1.11, A.8.1.11

Hydrant connections, metal-face 6.8

-L-

Large-stream devices
- Connections for 8.3, A.8.3.1, A.8.3.2
  - Primary inlet 8.3.1, A.8.3.1
  - Subsequent connections 8.3.2, A.8.3.2
- Definition 3.3.7

Locks, nonthreaded connection 6.3, A.6.3.1

-M-

Metal-face gauge ..... Fig. 6.2.2(a), Fig. 6.2.2(b)
Metal-face hydrant connections 6.8

-N-

NH ..... *see also* Screw threads
- Definition 3.3.8
- Designated thread series 5.2, A.5.2.1

Copyright National Fire Protection Association
Provided by IHS under license with NFPA
No reproduction or networking permitted without license from IHS
Not for Resale

Dimensions 5.3, 5.4
Basic dimensions 5.3.1, 5.4.1
Limiting 5.4.3, 5.4.4
Nominal dimensions 5.3.2, 5.4.2
Gauges ..... 5.6, Fig. A.5.6.3, A.5.6.4
Plug gauges ..... Table 5.6.1(a), 5.6.4, A.5.6.4
Ring gauges ..... Table 5.6.1(a), Table 5.6.1(b), 5.6.4, A.5.6.4
Nonmetallic materials, coupling 4.13
Nonthreaded adapters 6.7
Definition 3.3.9
Nonthreaded couplings (connections) ..... Chap. 6; *see also* Large-stream devices
Caps 6.6
Definition 3.3.9
Diagram ..... Fig. A.6.1
Fire hose connection ..... Fig. A.4.1(b)
Force to connect/disconnect requirements .... 6.5, Fig. 6.5.3.2(a), Fig. 6.5.3.2(b), A.6.5.1, A.6.5.3
Testing ..... 6.5.3, A.6.5.3, Fig. A.6.5.3
Gauges 6.2, A.6.2
Indicators 6.4
Locks 6.3, A.6.3.1
Metal-face hydrant connections ..... 6.8, Fig. 6.8.1
Nozzle connections for handlines 8.2, A.8.2
Assemblies ..... Fig. 8.2.1, Fig. 8.2.2
Nozzle tips ..... 8.2.4, 8.3.2.3 to 8.3.2.5
Playpipes 8.2.1, 8.2.2.1, A.8.2.5
Shutoff nozzles 8.2.1
Shutoff valves 8.2.2, 8.2.5, A.8.2.5
Spray nozzles ..... 8.2.5, 8.3.2.3 to 8.3.2.5, A.8.2.5
Nozzles
Spray ..... *see* Spray nozzles
Straight tip ..... 8.3.2.1 to 8.3.2.5
Definition 3.3.10.2

-P-

Playpipes 8.2.1, 8.2.2.1, A.8.2.5
Plug gauges ..... Table 5.6.1(c), 5.6.4, A.5.6.4
Primary inlet 8.3.1, A.8.3.1
Definition 3.3.11
Purpose of standard 1.2

-R-

References ..... Chap. 2
Ring gauges ..... Table 5.6.1(a), Table 5.6.1(b), 5.6.4, A.5.6.4

-S-

Scope of standard 1.1, A.1.1
Screw threads ..... *see also* Hose couplings
Basic angle 5.1.2
Basic form 5.1, A.5.1.5
Blunt start ..... 5.1.5, Fig. 5.1.5.1, A.5.1.5
Definition 3.3.2
Coupling or adapter (definition) 3.3.12
Designated thread series (NH) 5.2, A.5.2.1
Dimensions, NH 5.3, 5.4
Basic dimensions 5.3.1, 5.4.1
Limiting 5.4.3, 5.4.4
Nominal dimensions 5.3.2, 5.4.2
External threads
Limiting dimensions of 5.4.3
Ring gauge size ..... Table 5.6.1(b)
Tolerance 5.5.1, 5.5.2
Flat 5.1.3
Gauges and gauging NH threads ..... 5.6, Fig. A.5.6.3, A.5.6.4
Height, basic thread 5.1.4
Internal threads
Limiting dimensions of 5.4.4
Plug gauge limits ..... Table 5.6.1(c)
Tolerance 5.5.1, 5.5.3
Tolerance 5.5
Shall (definition) 3.2.3
Should (definition) 3.2.4
Shutoff nozzles 8.2.1
Spray nozzles ..... 8.2.5, 8.3.2.1 to 8.3.2.5, A.8.2.5
Definition 3.3.10.1
Straight tip nozzles ..... 8.3.2.1 to 8.3.2.5
Definition 3.3.10.2
Suction hose ..... *see* Hard suction hose
Swivel adapters or coupling mechanisms 4.9.2.3, 4.9.2.6, 8.3.1, A.8.3.1

-T-

Tail gaskets 7.3, A.7.3
Definition 3.3.5.3
Testing ..... *see also* Gauges
Adapters 4.5, 4.6
Couplings ..... *see* Couplings
Gaskets ..... 4.16.1 to 4.16.3
Nonthreaded connections ..... 6.5.3, A.6.5.3, Fig. A.6.5.3
Thread gaskets 7.1
Definition 3.3.5.4

-V-

Valves, shutoff 8.2.2, 8.2.5, A.8.2.5

-W-

Waterway, minimum 4.3

Copyright National Fire Protection Association
Provided by IHS under license with NFPA
No reproduction or networking permitted without license from IHS
Not for Resale

Sequence of Events Leading to Publication of an NFPA Committee Document

Call goes out for proposals to amend existing document or for recommendations on new document.

▼

Committee meets to act on proposals, to develop its own proposals, and to prepare its report.

▼

Committee votes on proposals by letter ballot. If two-thirds approve, report goes forward. Lacking two-thirds approval, report returns to committee.

▼

Report — *Report on Proposals* (ROP) — is published for public review and comment.

▼

Committee meets to act on each public comment received.

▼

Committee votes on comments by letter ballot. If two-thirds approve, supplementary report goes forward. Lacking two-thirds approval, supplementary report returns to committee.

▼

Supplementary report — *Report on Comments* (ROC) — is published for public review.

▼

NFPA membership meets (Annual or Fall Meeting) and acts on committee report (ROP or ROC).

▼

Committee votes on any amendments to report approved at NFPA Annual or Fall Meeting.

▼

Appeals to Standards Council on Association action must be filed within 20 days of the NFPA Annual or Fall Meeting.

▼

Standards Council decides, based on all evidence, whether or not to issue standard or to take other action, including upholding any appeals.

Committee Membership Classifications

The following classifications apply to Technical Committee members and represent their principal interest in the activity of the committee.

M *Manufacturer:* A representative of a maker or marketer of a product, assembly, or system, or portion thereof, that is affected by the standard.

U *User:* A representative of an entity that is subject to the provisions of the standard or that voluntarily uses the standard.

I/M *Installer/Maintainer:* A representative of an entity that is in the business of installing or maintaining a product, assembly, or system affected by the standard.

L *Labor:* A labor representative or employee concerned with safety in the workplace.

R/T *Applied Research/Testing Laboratory:* A representative of an independent testing laboratory or independent applied research organization that promulgates and/or enforces standards.

E *Enforcing Authority:* A representative of an agency or an organization that promulgates and/or enforces standards.

I *Insurance:* A representative of an insurance company, broker, agent, bureau, or inspection agency.

C *Consumer:* A person who is, or represents, the ultimate purchaser of a product, system, or service affected by the standard, but who is not included in the *User* classification.

SE *Special Expert:* A person not representing any of the previous classifications, but who has a special expertise in the scope of the standard or portion thereof.

NOTES:

1. "Standard" connotes code, standard, recommended practice, or guide.
2. A representative includes an employee.
3. While these classifications will be used by the Standards Council to achieve a balance for Technical Committees, the Standards Council may determine that new classifications of members or unique interests need representation in order to foster the best possible committee deliberations on any project. In this connection, the Standards Council may make such appointments as it seems appropriate in the public interest, such as the classification of "Utilities" in the National Electrical Code Committee.
4. Representatives of subsidiaries of any group are generally considered to have the same classification as the parent organization.

Copyright National Fire Protection Association
Provided by IHS under license with NFPA
No reproduction or networking permitted without license from IHS
Not for Resale

NFPA Technical Committee Document Proposal Form

Note: All proposals must be received by 5:00 p.m. EST/EDST on the published proposal closing date.

For further information on the standards-making process, please contact Codes and Standards Administration at 617-984-7249. For technical assistance, please call NFPA at 617-770-3000.

FOR OFFICE USE ONLY
Log #: _____
Date Rec'd: _____

Please indicate in which format you wish to receive your ROP/ROC: ☐ **CD ROM** ☐ **paper** ☐ **download**
(Note: In choosing the download option you intend to view the ROP/ROC from our Website. No copy will be sent to you.)

Date 12/18/02 **Name** John B. Smith **Telephone** 617-555-1212
Company _____
Address 9 Seattle St. **City** Seattle **State** WA **Zip** 02255
Please indicate organization represented (if any) Fire Marshals Assn. of North America

1. **a) NFPA Document Title** National Fire Alarm Code
   b) NFPA No. & Edition NFPA 72, 2002 ed. **c) Section/Paragraph** 4.4.7.1.1

2. **Proposal Recommends:** *(check one)* ☐ **new text** ☐ **revised text** ☒ **deleted text**

3. **Proposal.** *(Include proposed new or revised wording, or identification of wording to be deleted.)* Note: Proposed text should be in legislative format, that is, use underscore to denote wording to be inserted (inserted wording) and strike-through to denote wording to be deleted (~~deleted wording~~). Delete exception.

4. **Statement of Problem and Substantiation for Proposal.** Note: State the problem that will be resolved by your recommendation. Give the specific reason for your proposal including copies of tests, research papers, fire experience, etc. If more than 200 words, it may be abstracted for publication. A properly installed and maintained system should be free of ground faults. The occurrence of one or more ground faults should be required to cause a "trouble" signal because it indicates a condition that could contribute to future malfunction of the system. Ground fault protection has been widely available on these systems for years and its cost is negligible. Requiring it on all systems will promote better installations, maintenance and reliability.

5. ☒ **This Proposal is Original Material.** Note: Original material is considered to be the submitter's own idea based on or as a result of his/her own experience, thought, or research and, to the best of his/her knowledge, is not copied from another source.

   ☐ **This Proposal is Not Original Material; Its Source** ***(if known)*** **is as Follows:** _____

Sample

I hereby grant the NFPA all and full rights in copyright to this proposal, and I understand that I acquire no rights in any publication of NFPA in which this proposal in this or another similar or analogous form is used.

Signature ***(Required)*** John B. Smith

PLEASE USE SEPARATE FORM FOR EACH PROPOSAL • NFPA FAX (617) 770-3500

Mail to: Secretary, Standards Council • NFPA • 1 Batterymarch Park • PO Box 9101 • Quincy, MA 02269-9101

Copyright National Fire Protection Association
Provided by IHS under license with NFPA
No reproduction or networking permitted without license from IHS
Not for Resale

NFPA Technical Committee Document Proposal Form

Note: All proposals must be received by 5:00 p.m. EST/EDST on the published proposal closing date.

For further information on the standards-making process, please contact Codes and Standards Administration at 617-984-7249. For technical assistance, please call NFPA at 617-770-3000.

FOR OFFICE USE ONLY
Log #: _____
Date Rec'd: _____

Please indicate in which format you wish to receive your ROP/ROC: ☐ **CD ROM** ☐ **paper** ☐ **download**
(Note: In choosing the download option you intend to view the ROP/ROC from our Website. No copy will be sent to you.)

Date _____ **Name** _____ **Telephone** _____
Company _____
Address _____ **City** _____ **State** _____ **Zip** _____
Please indicate organization represented (if any) _____

1. **a) NFPA Document Title** _____
   b) NFPA No. & Edition _____ **c) Section/Paragraph** _____

2. **Proposal Recommends:** *(check one)* ☐ **new text** ☐ **revised text** ☐ **deleted text**

3. **Proposal.** *(Include proposed new or revised wording, or identification of wording to be deleted.)* Note: Proposed text should be in legislative format, that is, use underscore to denote wording to be inserted (inserted wording) and strike-through to denote wording to be deleted (~~deleted wording~~). _____

4. **Statement of Problem and Substantiation for Proposal.** Note: State the problem that will be resolved by your recommendation. Give the specific reason for your proposal including copies of tests, research papers, fire experience, etc. If more than 200 words, it may be abstracted for publication. _____

5. ☐ **This Proposal is Original Material.** Note: Original material is considered to be the submitter's own idea based on or as a result of his/her own experience, thought, or research and, to the best of his/her knowledge, is not copied from another source.

   ☐ **This Proposal is Not Original Material; Its Source *(if known)* is as Follows:** _____

I hereby grant the NFPA all and full rights in copyright to this proposal, and I understand that I acquire no rights in any publication of NFPA in which this proposal in this or another similar or analogous form is used.

Signature *(Required)* _____

PLEASE USE SEPARATE FORM FOR EACH PROPOSAL • NFPA FAX (617) 770-3500

Mail to: Secretary, Standards Council • NFPA • 1 Batterymarch Park • PO Box 9101 • Quincy, MA 02269-9101

--`,,,-`-`,,`,,`,`,,`---

Copyright National Fire Protection Association
Provided by IHS under license with NFPA
No reproduction or networking permitted without license from IHS

Not for Resale