NFPA 1951

Standard on Protective Ensembles for Technical Rescue Incidents

2007 Edition



NFPA, 1 Batterymarch Park, Quincy, MA 02169-7471
An International Codes and Standards Organization

--`,,```,,,,````-`-`,,`,,`,`,,`---

Copyright National Fire Protection Association
Provided by IHS under license with NFPA
No reproduction or networking permitted without license from IHS

Not for Resale

IMPORTANT NOTICES AND DISCLAIMERS CONCERNING NFPA DOCUMENTS

NOTICE AND DISCLAIMER OF LIABILITY CONCERNING THE USE OF NFPA DOCUMENTS

NFPA codes, standards, recommended practices, and guides, of which the document contained herein is one, are developed through a consensus standards development process approved by the American National Standards Institute. This process brings together volunteers representing varied viewpoints and interests to achieve consensus on fire and other safety issues. While the NFPA administers the process and establishes rules to promote fairness in the development of consensus, it does not independently test, evaluate, or verify the accuracy of any information or the soundness of any judgments contained in its codes and standards.

The NFPA disclaims liability for any personal injury, property or other damages of any nature whatsoever, whether special, indirect, consequential or compensatory, directly or indirectly resulting from the publication, use of, or reliance on this document. The NFPA also makes no guaranty or warranty as to the accuracy or completeness of any information published herein.

In issuing and making this document available, the NFPA is not undertaking to render professional or other services for or on behalf of any person or entity. Nor is the NFPA undertaking to perform any duty owed by any person or entity to someone else. Anyone using this document should rely on his or her own independent judgment or, as appropriate, seek the advice of a competent professional in determining the exercise of reasonable care in any given circumstances.

The NFPA has no power, nor does it undertake, to police or enforce compliance with the contents of this document. Nor does the NFPA list, certify, test or inspect products, designs, or installations for compliance with this document. Any certification or other statement of compliance with the requirements of this document shall not be attributable to the NFPA and is solely the responsibility of the certifier or maker of the statement.

--`,,```,,,,````-`-`,,`,,`,`,,`---

Copyright National Fire Protection Association
Provided by IHS under license with NFPA
No reproduction or networking permitted without license from IHS

Not for Resale

ADDITIONAL NOTICES AND DISCLAIMERS

Updating of NFPA Documents

Users of NFPA codes, standards, recommended practices, and guides should be aware that these documents may be superseded at any time by the issuance of new editions or may be amended from time to time through the issuance of Tentative Interim Amendments. An official NFPA document at any point in time consists of the current edition of the document together with any Tentative Interim Amendments and any Errata then in effect. In order to determine whether a given document is the current edition and whether it has been amended through the issuance of Tentative Interim Amendments or corrected through the issuance of Errata, consult appropriate NFPA publications such as the National Fire Codes® Subscription Service, visit the NFPA website at www.nfpa.org, or contact the NFPA at the address listed below.

Interpretations of NFPA Documents

A statement, written or oral, that is not processed in accordance with Section 6 of the Regulations Governing Committee Projects shall not be considered the official position of NFPA or any of its Committees and shall not be considered to be, nor be relied upon as, a Formal Interpretation.

Patents

The NFPA does not take any position with respect to the validity of any patent rights asserted in connection with any items which are mentioned in or are the subject of NFPA codes, standards, recommended practices, and guides, and the NFPA disclaims liability for the infringement of any patent resulting from the use of or reliance on these documents. Users of these documents are expressly advised that determination of the validity of any such patent rights, and the risk of infringement of such rights, is entirely their own responsibility.

NFPA adheres to applicable policies of the American National Standards Institute with respect to patents. For further information contact the NFPA at the address listed below.

Law and Regulations

Users of these documents should consult applicable federal, state, and local laws and regulations. NFPA does not, by the publication of its codes, standards, recommended practices, and guides, intend to urge action that is not in compliance with applicable laws, and these documents may not be construed as doing so.

Copyrights

This document is copyrighted by the NFPA. It is made available for a wide variety of both public and private uses. These include both use, by reference, in laws and regulations, and use in private self-regulation, standardization, and the promotion of safe practices and methods. By making this document available for use and adoption by public authorities and private users, the NFPA does not waive any rights in copyright to this document.

Use of NFPA documents for regulatory purposes should be accomplished through adoption by reference. The term "adoption by reference" means the citing of title, edition, and publishing information only. Any deletions, additions, and changes desired by the adopting authority should be noted separately in the adopting instrument. In order to assist NFPA in following the uses made of its documents, adopting authorities are requested to notify the NFPA (Attention: Secretary, Standards Council) in writing of such use. For technical assistance and questions concerning adoption of NFPA documents, contact NFPA at the address below.

For Further Information

All questions or other communications relating to NFPA codes, standards, recommended practices, and guides and all requests for information on NFPA procedures governing its codes and standards development process, including information on the procedures for requesting Formal Interpretations, for proposing Tentative Interim Amendments, and for proposing revisions to NFPA documents during regular revision cycles, should be sent to NFPA headquarters, addressed to the attention of the Secretary, Standards Council, NFPA, 1 Batterymarch Park, P.O. Box 9101, Quincy, MA 02269-9101.

For more information about NFPA, visit the NFPA website at www.nfpa.org.

--`,,```,,,,````-`-`,,`,,`,`,,`---

Copyright National Fire Protection Association
Provided by IHS under license with NFPA
No reproduction or networking permitted without license from IHS
Not for Resale

Copyright © 2007 National Fire Protection Association. All Rights Reserved.

NFPA 1951

Standard on

Protective Ensembles for Technical Rescue Incidents

2007 Edition

This edition of NFPA 1951, *Standard on Protective Ensembles for Technical Rescue Incidents*, was prepared by the Technical Committee on Special Operations Protective Clothing and Equipment and released by the Technical Correlating Committee on Fire and Emergency Services Protective Clothing and Equipment. It was issued by the Standards Council on December 1, 2006, with an effective date of December 20, 2006, and supersedes all previous editions.

This edition of NFPA 1951 was approved as an American National Standard on December 20, 2006.

Origin and Development of NFPA 1951

The Technical Committee on Special Operations Protective Clothing and Equipment began work on the first edition of NFPA 1951 in 1997 to answer the need for personal protective equipment for fire and emergency services personnel operating at technical rescue incidents involving building or structural collapse, vehicle/person extrication, confined space entry, trench/cave-in rescue, rope rescue, and similar incidents. Technical rescue incidents in urban and other nonwilderness locations are complex incidents requiring specially trained personnel and special equipment.

The Committee developed NFPA 1951, *Standard on Protective Ensemble for USAR Operations*, with the goal of establishing personal protection requirements for protective ensembles to reduce the safety risks and health risks associated with exposure of personnel to the hazards of technical rescue during search, rescue, extrication, treatment, recovery, site stabilization, and other mitigation operations at or involving USAR incidents.

The majority of performance criteria in this standard were based on the September 1993 U.S. Fire Administration Study "Protective Clothing and Equipment Needs of Emergency Responders for Urban Search and Rescue Missions" (FA-136, Federal Emergency Management Agency), September 1993. That report documented the protective clothing and equipment needs for emergency responders engaged in technical rescue activities. Input was obtained from an emergency responder user requirements committee and resulted in proposed criteria based on a needs and risk analysis. The U.S. Fire Administration report contains survey results and test data for a number of materials.

The jurisdiction of this Technical Committee does not include the respiratory protection that is necessary for these operations; the appropriate respiratory protection needs to be addressed by emergency responder organizations.

With this second edition of NFPA 1951, the title has been changed to *Standard on Protective Ensembles for Technical Rescue Incidents*, to clarify that the standard applies to all emergency services organizations that perform technical rescue incident operations, not just to USAR (Urban Search and Rescue) teams of state or federal governments. It embraces the broader audience of emergency responders for whom these types of protective ensembles are developed to provide protection from the expected hazards common to such operations.

This edition specifies requirements for three different types of technical rescue ensembles:

(1) A *utility* ensemble, which provides protection from physical hazards, a basic flame resistance for the ensemble and the elements of the ensemble, and a high level of "breathability" of the ensemble to reduce heat stress for the wearers
(2) A *rescue and recovery* ensemble, which provides the physical protection of the utility ensemble and a blood-borne-pathogen barrier to protect wearers from body fluid infection from injured or deceased victims

Copyright National Fire Protection Association
Provided by IHS under license with NFPA
No reproduction or networking permitted without license from IHS
Not for Resale

(3) A *CBRN* ensemble, which in addition to all the protections of the rescue and recovery ensemble, provides limited protection from chemicals, biological agents, and radiological particulates during incidents involving chemical warfare agents or weapons of mass destruction

It is left to emergency services organizations to select the appropriate ensembles for the protection of their emergency responders based on the expected and anticipated technical rescue incidents to which the organizations will or could respond.

In Memoriam, 11 September 2001

We pay tribute to the 343 members of FDNY who gave their lives to save civilian victims on 11 September 2001, at the World Trade Center. They are true American heroes in death, but they were also American heroes in life. We will keep them in our memory and in our hearts. They are the embodiment of courage, bravery, and dedication. May they rest in peace.

--`,,```,,,,````-`-`,,`,,`,`,,`---

Copyright National Fire Protection Association
Provided by IHS under license with NFPA
No reproduction or networking permitted without license from IHS

Not for Resale

Technical Correlating Committee on Fire and Emergency Services Protective Clothing and Equipment (FAE-AAC)

Richard M. Duffy, *Chair*
International Association of Fire Fighters, DC [L]

William M. Lambert, *Secretary*
Mine Safety Appliances Company, PA [M]
Rep. Compressed Gas Association

Leslie Anderson, U.S. Department of Agriculture, MT [E]
Roger L. Barker, North Carolina State University, NC [SE]
Les Boord, U.S. Department of Health and Human Services, PA [E]
Steven D. Corrado, Underwriters Laboratories Incorporated, NC [RT]
Nicholas J. Curtis, Lion Apparel, Incorporated, OH [M]
Robert A. Freese, Globe Manufacturing Company, NH [M]
Andy Gbur, Intertek, OH [RT]
Bill Grilliot, Morning Pride Manufacturing, LLC /TFG, OH [M]
Rep. Fire & Emergency Manufacturers & Services Association Incorporated
Kimberly M. Henry, PBI Performance Products, Incorporated, NC [M]
James S. Johnson, Lawrence Livermore National Laboratory, CA [RT]
Cy Long, Texas Commission on Fire Protection, TX [E]
David G. Matthews, Fire & Industrial (PPE) Limited, United Kingdom [SE]
Rep. International Standards Organization
Jim Minx, Oklahoma State Firefighters Association, OK [C]
Gary L. Neilson, Reno Fire Department, NV [U]
Stephen R. Sanders, Safety Equipment Institute (SEI), VA [RT]
Denise N. Statham, Southern Mills, Incorporated, GA [M]
Jeffrey O. Stull, International Personnel Protection, Incorporated, TX [SE]
David Trivette, Tyco/Scott Health & Safety, NC [M]
Rep. International Safety Equipment Association
Robert D. Tutterow, Jr., Charlotte Fire Department, NC [U]
Rep. Fire Industry Equipment Research Organization
Harry P. Winer, U.S. Department of the Navy, MA [RT]

Alternates

Jason L. Allen, Intertek, NY [RT]
(Alt. to A. Gbur)
Eric J. Beck, Mine Safety Appliances Company, PA [M]
(Alt. to W. M. Lambert)
Janice C. Bradley, International Safety Equipment Association, VA [M]
(Alt. to D. Trivette)
Patricia A. Freeman, Globe Manufacturing Company, Incorporated, NH [M]
(Alt. to R. A. Freese)
Patricia A. Gleason, Safety Equipment Institute (SEI), VA [RT]
(Alt. to S. R. Sanders)
Mary I. Grilliot, TFG/Morning Pride Manufacturing LLC, OH [M]
(Alt. to B. Grilliot)
William E. Haskell III, U.S. Department of Health and Human Services, MA [E]
(Alt. to L. Boord)
Steven B. Lumry, Oklahoma City Fire Department, OK [C]
(Alt. to J. Minx)
Andrew P. Perrella, E. I. DuPont Company, DE [M]
(Alt. to K. M. Henry)
Frank P. Taylor, Lion Apparel, Incorporated, VA [M]
(Alt. to N. J. Curtis)

Nonvoting

Donna P. Brehm, Virginia Beach Fire Department, VA [U]
Rep. TC on Emergency Medical Services PC&E
Dean W. Cox, Fairfax County Fire & Rescue Department, VA [U]
Rep. TC on Special Operations PC&E
Glenn P. Jirka, Miami Township Fire & EMS Division, OH [E]
Rep. TC on Hazardous Materials PC&E
Kirk Owen, Plano Fire Department, TX [U]
Rep. TC on Structural and Proximity Fire Fighting PC&E
Ray F. Reed, Dallas Fire Rescue, TX [U]
Rep. TC on Respiratory Protection Equipment
Bruce H. Varner, Santa Rosa Fire Department, CA [E]
Rep. TC on Electronic Safety Equipment

Bruce W. Teele, NFPA Staff Liaison

This list represents the membership at the time the Committee was balloted on the final text of this edition. Since that time, changes in the membership may have occurred. A key to classifications is found at the back of the document.

NOTE: Membership on a committee shall not in and of itself constitute an endorsement of the Association or any document developed by the committee on which the member serves.

Committee Scope: This Committee shall have primary responsibility for documents on the design, performance, testing, and certification of protective clothing and protective equipment manufactured for fire and emergency services organizations and personnel, to protect against exposures encountered during emergency incident operations. This Committee shall also have the primary responsibility for documents on the selection, care, and maintenance of such protective clothing and protective equipment by fire and emergency services organizations and personnel.

Copyright National Fire Protection Association
Provided by IHS under license with NFPA
No reproduction or networking permitted without license from IHS
Not for Resale

Technical Committee on Special Operations Protective Clothing and Equipment (FAE-SCE)

Dean W. Cox, *Chair*
Fairfax County Fire & Rescue Department, VA [U]

Karen Lehtonen, *Secretary*
Lion Apparel, Incorporated, OH [M]

Steven D. Corrado, Underwriters Laboratories Incorporated, NC [RT]
Keith B. Dempsey, City of Dalton Fire Department, GA [C]
James A. Frank, CMC Rescue, Incorporated, CA [M]
Stephen J. Geraghty, Fire Department City of New York, NY [U]
Hamid M. Ghorashi, E. I. DuPont de Nemours and Company, Incorporated, VA [M]
Daniel Gohlke, W. L. Gore & Associates, MD [M]
William E. Haskell III, U.S. Department of Health & Human Services, MA [E]
Diane B. Hess, PBI Performance Products, Incorporated, NC [M]
Steve Hudson, Pigeon Mountain Industries, Incorporated, GA [M]
H. Dean Paderick, Special Rescue International, VA [SE]
Jack Reall, Columbus Fire Division, OH [U]
Stephen R. Sanders, Safety Equipment Institute (SEI), VA [RT]
Michael T. Stanhope, Southern Mills, Incorporated, GA [M]
Doug Stephenson, Walker County Emergency Services, GA [U]
Jeffrey O. Stull, International Personnel Protection, Incorporated, TX [SE]
Adam R. Varley, Vartest Laboratories, Incorporated, NY [RT]
Brian Wackowicz, Intertek, NY [RT]
Harry P. Winer, U.S. Department of the Navy, MA [RT]

Alternates

Jason L. Allen, Intertek, NY [RT]
(Alt. to B. Wackowicz)
Nicholas J. Curtis, Lion Apparel, Incorporated, OH [M]
(Alt. to K. Lehtonen)
Kimberly M. Henry, PBI Performance Products, Incorporated, NC [M]
(Alt. to D. B. Hess)
Kim Klaren, Fairfax County Fire & Rescue Department, VA [U]
(Alt. to D. W. Cox)
Loui (Clem) McCurley, Pigeon Mountain Industries, Incorporated, CO [M]
(Alt. to S. Hudson)
Stephen G. Rasweiler, Fire Department City of New York, NY [U]
(Alt. to S. J. Geraghty)
Angie M. Shepherd, U.S. Department of Health & Human Services, PA [E]
(Alt. to W. E. Haskell III)
Denise N. Statham, Southern Mills, Incorporated, GA [M]
(Alt. to M. T. Stanhope)

Bruce W. Teele, NFPA Staff Liaison

This list represents the membership at the time the Committee was balloted on the final text of this edition. Since that time, changes in the membership may have occurred. A key to classifications is found at the back of the document.

NOTE: Membership on a committee shall not in and of itself constitute an endorsement of the Association or any document developed by the committee on which the member serves.

Committee Scope: This Committee shall have primary responsibility for documents on special operations protective clothing and protective equipment, except respiratory equipment, that provides hand, foot, torso, limb, head, and interface protection for fire fighters and other emergency services responders during incidents involving special operations functions including, but not limited to, structural collapse, trench rescue, confined space entry, urban search and rescue, high angle/mountain rescue, vehicular extraction, swift water or flooding rescue, contaminated water diving, and air operations.

This Committee shall also have primary responsibility for documents on station/work uniform garments that are not of themselves primary protective garments but can be combined with a primary protective garment to serve dual or multiple functions.

Additionally, this Committee shall have primary responsibility for documents on the selection, care, and maintenance of special operations protective clothing and equipment by fire and emergency services organizations and personnel.

Copyright National Fire Protection Association
Provided by IHS under license with NFPA
No reproduction or networking permitted without license from IHS
Not for Resale

Contents

Chapter 1 Administration **1951–** 6
1.1 Scope **1951–** 6
1.2 Purpose **1951–** 6
1.3 Application **1951–** 6
1.4 Units **1951–** 7

Chapter 2 Referenced Publications **1951–** 7
2.1 General **1951–** 7
2.2 NFPA Publications **1951–** 7
2.3 Other Publications **1951–** 7
2.4 References for Extracts in Mandatory Sections. (Reserved) **1951–** 8

Chapter 3 Definitions **1951–** 8
3.1 General **1951–** 8
3.2 NFPA Official Definitions **1951–** 8
3.3 General Definitions **1951–** 9

Chapter 4 Certification **1951–**13
4.1 General **1951–**13
4.2 Certification Program **1951–**13
4.3 Inspection and Testing **1951–**14
4.4 Annual Verification of Product Compliance **1951–**15
4.5 Manufacturers' Quality Assurance Program **1951–**15
4.6 Hazards Involving Compliant Product ... **1951–**16
4.7 Manufacturers' Investigation of Complaints and Returns **1951–**16
4.8 Manufacturers' Safety Alert and Product Recall Systems **1951–**17

Chapter 5 Labeling and Information **1951–**17
5.1 Product Label Requirements **1951–**17
5.2 User Information **1951–**18

Chapter 6 Design Requirements **1951–**18
6.1 Utility Protective Ensemble for Technical Rescue Incidents Design Requirements **1951–**18
6.2 Rescue and Recovery Protective Ensemble for Technical Rescue Incidents Design Requirements **1951–**20
6.3 CBRN Protective Ensemble for Technical Rescue Incidents Design Requirements **1951–**22

Chapter 7 Performance Requirements **1951–**23
7.1 Utility Protective Ensemble for Technical Rescue Incidents Performance Requirements **1951–**23
7.2 Rescue and Recovery Protective Ensemble for Technical Rescue Incidents Performance Requirements **1951–**26
7.3 CBRN Protective Ensemble for Technical Rescue Incidents Performance Requirements **1951–**29

Chapter 8 Test Methods **1951–**32
8.1 Sample Preparation Procedures **1951–**32
8.2 Thermal Protective Performance Test **1951–**35
8.3 Overall Liquid Integrity Test 1 ..... **1951–**36
8.4 Flame Resistance Test 1 ..... **1951–**37
8.5 Heat and Thermal Shrinkage Resistance Test **1951–**38
8.6 Total Heat Loss Test **1951–**41
8.7 Tear Resistance Test **1951–**42
8.8 Breaking Strength Test **1951–**42
8.9 Abrasion Resistance Test 1 ..... **1951–**42
8.10 Cleaning Shrinkage Resistance Test **1951–**43
8.11 Abrasion Resistance Test 2 ..... **1951–**43
8.12 Seam Breaking Strength Test **1951–**44
8.13 Water Absorption Resistance Test **1951–**44
8.14 Thread Heat Resistance Test **1951–**45
8.15 Corrosion Resistance Test **1951–**45
8.16 Liquid Penetration Resistance Test **1951–**46
8.17 Viral Penetration Resistance Test **1951–**46
8.18 Flame Resistance Test 2 ..... **1951–**47
8.19 Top Impact Resistance Test (Force) **1951–**48
8.20 Physical Penetration Resistance Test **1951–**50
8.21 Electrical Insulation Test 1 ..... **1951–**51
8.22 Suspension System Retention Test **1951–**52
8.23 Retention System Test **1951–**52
8.24 Flame Resistance Test 3 ..... **1951–**53
8.25 Conductive Heat Resistance Test **1951–**55
8.26 Cut Resistance Test **1951–**55
8.27 Puncture Resistance Test 1 ..... **1951–**56
8.28 Glove Hand Function Test **1951–**56
8.29 Grip Test **1951–**56
8.30 Glove Donning Test **1951–**57
8.31 Overall Liquid Integrity Test 2 ..... **1951–**57
8.32 Flame Resistance Test 4 ..... **1951–**58
8.33 Impact Resistance Test **1951–**58
8.34 Ladder Shank Bend Resistance Test **1951–**59
8.35 Abrasion Resistance Test 3 ..... **1951–**59
8.36 Puncture Resistance Test 2 ..... **1951–**59
8.37 Slip Resistance Test **1951–**59
8.38 Electrical Insulation Test 2 ..... **1951–**60
8.39 Eyelet and Stud Post Attachment Test **1951–**60
8.40 Label Durability and Legibility Test **1951–**60
8.41 Burst Strength Test **1951–**61
8.42 Compression Resistance Test **1951–**61
8.43 Metatarsal Protection Test **1951–**62
8.44 Man-in-Simulant Test (MIST) **1951–**62
8.45 Chemical Permeation Resistance Test **1951–**66
8.46 Puncture Propagation Tear Resistance Test **1951–**68
8.47 Cold Temperature Performance Test **1951–**68
8.48 Abrasion Resistance Test 4 ..... **1951–**68

Annex A Explanatory Material **1951–**69

Annex B Informational References **1951–**76

Index **1951–**78

Copyright National Fire Protection Association
Provided by IHS under license with NFPA
No reproduction or networking permitted without license from IHS
Not for Resale

NFPA 1951

Standard on

Protective Ensembles for Technical Rescue Incidents

2007 Edition

IMPORTANT NOTE: This NFPA document is made available for use subject to important notices and legal disclaimers. These notices and disclaimers appear in all publications containing this document and may be found under the heading "Important Notices and Disclaimers Concerning NFPA Documents." They can also be obtained on request from NFPA or viewed at www.nfpa.org/disclaimers.

NOTICE: An asterisk (*) following the number or letter designating a paragraph indicates that explanatory material on the paragraph can be found in Annex A.

Information on referenced publications can be found in Chapter 2 and Annex B.

Chapter 1 Administration

1.1* Scope.

1.1.1 This standard shall specify the minimum design, performance, testing, and certification requirements for utility technical rescue, rescue and recovery technical rescue, and chemicals, biological agents, and radiological particulate [also known as chemical, biological, radiological, and nuclear (CBRN) technical rescue] protective ensembles for use by emergency services personnel during technical rescue incidents.

1.1.2 This standard shall also specify the minimum requirements for the various elements of the utility technical rescue ensembles and the rescue and recovery technical rescue protective ensembles, including garments, helmets, gloves, footwear, interface, and eye and face protection devices.

1.1.3* This standard shall also specify the minimum requirements for the respiratory protection for the CBRN technical rescue protective ensembles.

1.1.4 This standard shall not specify requirements for respiratory protection equipment for technical rescue utility and technical rescue and recovery protective ensembles; those requirements are specified by NIOSH in 42 CFR 84, and by OSHA in 29 CFR 1910.134.

1.1.5 This standard shall not establish criteria for water or wilderness operations.

1.1.6* This standard shall not specify requirements for any visibility markings.

1.1.7 This standard shall not establish criteria for protection from ionizing radiation.

1.1.8 This standard shall not establish criteria for protection for any fire-fighting operations or hazardous materials emergencies.

1.1.9* This standard shall not specify requirements for accessories that could be attached to any ensemble or ensemble element but are not required for the ensemble or element to meet the requirements of this standard.

1.1.10 Certification of technical rescue protective ensembles or ensemble elements to the requirements of this standard shall not preclude certification to additional applicable standards where the protective ensemble or ensemble elements meet all the applicable requirements of the other standards.

1.1.11 This standard shall not be construed as addressing all the safety concerns associated with the use of compliant protective ensembles or elements. It shall be the responsibility of the persons and organizations that use compliant protective ensembles or elements to establish safety and health practices and to determine the applicability of regulatory limitations prior to use.

1.1.12 This standard shall not be construed as addressing all the safety concerns, if any, associated with the use of this standard by testing facilities. It shall be the responsibility of the persons and organizations that use this standard to conduct testing of protective ensembles or elements to establish safety and health practices and to determine the applicability of regulatory limitations prior to using this standard for any designing, manufacturing, and testing.

1.1.13 Nothing herein shall restrict any jurisdiction or manufacturer from exceeding these minimum requirements.

1.2* Purpose.

1.2.1* The purpose of this standard shall be to establish minimum levels of protection for emergency services personnel assigned to or involved in search, rescue, treatment, decontamination, recovery, site stabilization, and similar operations at technical rescue incidents.

1.2.2 To achieve that purpose, this standard shall establish requirements for three different ensembles and their associated ensemble elements designed to provide protection to emergency response personnel during technical rescue incidents.

1.2.2.1* Utility technical rescue protective ensembles and ensemble element requirements shall establish limited protection for operational settings where exposure to physical and thermal hazards are expected.

1.2.2.2* Rescue and recovery technical rescue protective ensembles and ensemble element requirements shall establish limited protection for operational settings where exposure to physical, thermal, liquid, and body fluid–borne pathogen hazards are expected.

1.2.2.3* CBRN technical rescue protective ensemble and ensemble element requirements shall establish limited protection in operational settings where exposure to physical, thermal, liquid, and body fluid–borne pathogen hazards and CBRN agents in vapor, liquid-splash, and particulate forms are expected during terrorism incident operations.

1.2.3* Controlled laboratory tests used to determine compliance with the performance requirements of this standard shall not be deemed as establishing performance levels for all situations to which personnel can be exposed.

1.2.4 This standard is not intended to be utilized as a detailed manufacturing or purchase specification but shall be permitted to be referenced in purchase specifications as minimum requirements.

1.3 Application.

1.3.1 This standard shall apply to the design, manufacturing, testing, and certification of new utility technical rescue, rescue

Copyright National Fire Protection Association
Provided by IHS under license with NFPA
No reproduction or networking permitted without license from IHS
Not for Resale

and recovery technical rescue, and CBRN technical rescue protective ensembles and new ensemble elements.

1.3.2 This edition of NFPA 1951 shall not apply to urban search and rescue (USAR) protective ensembles and ensemble elements manufactured and certified to previous editions of this standard.

1.3.3 This standard shall not apply to utility technical rescue, rescue and recovery technical rescue, and CBRN technical rescue protective ensembles and ensemble elements manufactured to the requirements of any other organization's standards.

1.3.4 This standard shall not apply to protective ensembles or protective ensemble elements for personnel assigned to or involved in search, rescue, recovery, or site stabilization operations that require the functional capabilities for water or wilderness incidents.

1.3.5* The requirements of this standard shall not apply to accessories that could be attached to any element of technical rescue ensembles.

1.3.6* This standard shall not apply to protection for any fire fighting operations or hazardous materials emergencies.

1.3.7 This standard shall not apply to protection from ionizing radiation, protection from all chemical warfare agents, protection from all biological agents, protection from all weapons of mass destruction, or protection from all toxic industrial chemicals.

1.3.8 This standard shall not apply to the use of utility technical rescue, rescue and recovery technical rescue, and CBRN technical rescue protective ensembles and ensemble elements.

1.3.9* The requirements of this standard shall not apply to any accessories that could be attached to the product but that are not necessary for the product to meet the requirements of this standard.

1.4* Units.

1.4.1 In this standard, values for measurement are followed by an equivalent in parentheses, but only the first stated value shall be regarded as the requirement.

1.4.2 Equivalent values in parentheses shall not be considered as the requirement, because these values are approximate.

Chapter 2 Referenced Publications

2.1 General. The documents or portions thereof listed in this chapter are referenced within this standard and shall be considered part of the requirements of this document.

2.2 NFPA Publications. National Fire Protection Association, 1 Batterymarch Park, Quincy, MA 02169-7471.

NFPA 1500, *Standard on Fire Department Occupational Safety and Health Program,* 2007 edition.

NFPA 1971, *Standard on Protective Ensembles for Structural Fire Fighting and Proximity Fire Fighting,* 2007 edition.

NFPA 1981, *Standard on Open-Circuit Self-Contained Breathing Apparatus (SCBA) for Emergency Services,* 2007 edition.

2.3 Other Publications.

2.3.1 AATCC Publications. American Association of Textile Chemists and Colorists, P.O. Box 12215, Research Triangle Park, NC 27709.

AATCC 42, *Water Resistance: Impact Penetration Test*, 2000.

AATCC 70, *Water Repellency: Tumble Jar Dynamic Absorption Test*, 2000.

AATCC 135, *Dimensional Changes in Automatic Home Laundering of Woven and Knit Fabrics*, 2004.

2.3.2 ANSI Publications. American National Standards Institute, Inc., 25 West 43rd Street, 4th floor, New York, NY 10036.

ANSI Z87.1, *Occupational and Educational Personal Eye and Face Protection Devices*, 2003.

2.3.3 ASTM Publications. ASTM International, 100 Barr Harbor Drive, P.O. Box C700, West Conshohocken, PA 19428-2959.

ASTM B 117, *Standard Practice for Operating Salt Spray (Fog) Apparatus*, 2003.

ASTM B 152, *Specification for Copper Sheet, Strip, Plate, and Rolled Bar*, 2000.

ASTM D 471, *Standard Test Method for Rubber Property — Effect of Liquids*, 1998.

ASTM D 747, *Standard Test Method for Apparent Bending Modulus of Plastics by Means of a Cantilever Beam*, 2002.

ASTM D 1630, *Standard Test Method for Rubber Property — Abrasion Resistance (Footwear Abrader)*, 2000.

ASTM D 1683, *Standard Test Method for Failure in Sewn Seams of Woven Fabrics*, 2004.

ASTM D 2582, *Standard Test Method for Puncture Propagation Tear Resistance of Plastic Film and Thin Sheeting*, 2003.

ASTM D 3787, *Standard Test Method for Hydraulic Bursting Strength of Knitted Goods and Nonwoven Fabrics — Ball Burst Testing Method.*

ASTM D 3884, *Standard Test Method for Abrasion Resistance of Textile Fabrics (Rotary Platform, Double-Head Method)*, 2001.

ASTM D 3885, *Standard Test Method for Abrasion Resistance of Textile Fabrics (Flexing and Abrasion Method)*, 2004.

ASTM D 3940, *Standard Test Method for Bursting Strength (Load) and Elongation of Sewn Seams of Knit or Woven Stretch Textile Fabrics*, 1983.

ASTM D 4157, *Standard Test Method for Abrasion Resistance of Textile Fabrics (Oscillatory Cylinder Method)*, 2002.

ASTM D 4966, *Standard Test Method for Abrasion Resistance of Textile Fabrics*, 1998.

ASTM D 5034, *Standard Test Method for Breaking Force and Elongation of Textile Fabrics (Grab Method)*, 2001.

ASTM D 5035, *Standard Test Method for Breaking Force and Elongation of Textile Fabrics (Strip Method)*, 2003.

ASTM D 5587, *Standard Test Method for Tearing Strength of Fabrics by Trapezoid Procedure,* 2005.

ASTM D 6413, *Standard Test Method for Flame Resistance of Textiles (Vertical Test)*, 1999.

ASTM F 392, *Standard Test Method for Flex Durability of Flexible Barrier Materials,* 2004.

Copyright National Fire Protection Association
Provided by IHS under license with NFPA
No reproduction or networking permitted without license from IHS
Not for Resale

ASTM F 489, *Standard Test Method for Static Coefficient of Friction of Shoe Sole and Heel Materials as Measured by the James Machine*, 1996.

ASTM F 739, *Standard Test Method for Resistance of Protective Clothing Materials to Permeation by Liquids or Gases Under Conditions of Continuous Contact*, 1999a.

ASTM F 903, *Standard Test Method for Resistance of Protective Clothing Materials to Penetration by Liquids*, 2003.

ASTM F 1060, *Standard Test Method for Thermal Protective Performance of Materials for Protective Clothing for Hot Surface Contact*, 2005.

ASTM F 1116, *Standard Test Method for Determining Dielectric Strength of Overshoe Footwear*, 2003.

ASTM F 1342, *Standard Test Method for Resistance of Protective Clothing Materials to Puncture*, 2005.

ASTM F 1359, *Standard Test Method for Liquid Penetration Resistance of Protective Clothing or Protective Ensembles Under a Shower Spray While on a Mannequin*, 1999.

ASTM F 1671, *Standard Test Method for Resistance of Materials Used in Protective Clothing to Penetration by Blood-Borne Pathogens Using Phi-X174 Bacteriophage as a Test System*, 2003.

ASTM F 1790, *Test Methods for Measuring Cut Resistance of Materials Used in Protective Clothing*, 2004.

ASTM F 1868, *Standard Test Method for Thermal and Evaporative Resistance of Clothing Materials using a Sweating Hot Plate*, 2002.

ASTM F 2010, *Standard Test Method for Evaluation of Glove Effects on Wearer Hand Dexterity Using a Modified Pegboard Test*, 2000.

ASTM F 2412, *Standard Test Methods for Foot Protection*, 2005.

2.3.4 FIA Publications. Footwear Industries of America, 1420 K Street, NW, Suite 600, Washington, DC 20005.

FIA Standard 1209, *Whole Shoe Flex*, 1984.

2.3.5 ISO Publications. International Organization for Standardization, 1, rue de Varembé, Case Postale 56, CH-1211 Geneve 20, Switzerland.

ISO Guide 27, *Guidelines for corrective action to be taken by a certification body in the event of misuse of its mark of conformity*, 1983.

ISO Guide 62, *General requirements for bodies operating assessment and certification/registration of quality systems*, 1983.

ISO Guide 65, *General requirements for bodies operating product certification systems*, 1996.

ISO 9001, *Quality Management Systems — Requirements*, 2000.

ISO 17011, *General requirements for bodies providing assessment and accreditation of conformity assessment bodies*, 2003.

ISO/IEC 17021, *Conformity assessment — Requirements for bodies providing audit and certification of management systems*, 2006.

ISO 17025, *General requirements for the competence of calibration and testing laboratories*, 1999.

ISO 17492, *Clothing for protection against heat and flame — Determination of heat transmission on exposure to both flame and radiant heat*, 2003.

2.3.6 SAE Publications. Society of Automotive Engineers, 400 Commonwealth Drive, Warrendale, PA 15096.

SAE J211, *Instrumentation for Impact Test.*

2.3.7 U.S. Department of Defense Publications. Standardization Documents Order Desk, Building 4D, 700 Robbins Avenue, Philadelphia, PA 19111-5094.

A-A-55126, *Commercial Item Description, Fastener Tapes, Hook and Pile, Synthetic*, 1999.

A-A-55634, *Commercial Item Description, Zippers (Fasteners, Slide Interlocking)*, 2004.

MIL-F-10884G, *Fastener, Snap*, 16 June 1995.

2.3.8 U.S. Government Publications. U.S. Government Printing Office, Washington, DC 20402.

Title 29, Code of Federal Regulations, Part 1910.132, "Personal Protective Equipment: General Requirements."

Title 29, Code of Federal Regulations, Part 1910.134, "Personal Protective Equipment: Respiratory Protection."

Title 42, Code of Federal Regulations, Part 84, "Approval of Respiratory Protective Devices," 2004.

Statement of Standard for NIOSH CBRN PAPR, Testing, 2003.

2.3.9 Other Publications.

Assessment of the U.S. Army Chemical and Biological Defense Command Report 1: Technical Assessment of the Man-In-Simulant Test (MIST) Program, National Research Council Report, 1997.

NATO Document No. 1268015, AEP-52, "Assessment of the Effect Levels of Classical Chemical Warfare Agents Applied to the Skin to Be Used in the Design of Protective Equipment," 2001.

The Technical Cooperation Program, Chemical Biological Defence Technical Panel 11 on Low Burden, Integrated Protective Clothing, "Final Report: Development of a Standard Vapour Systems Test to Assess the Protection Capability of NBC Individual Protective Ensembles," Appendix G, Defence Research Establishment Suffield Report, April 1997, UNCLASSIFIED.

Merriam-Webster's Collegiate Dictionary, 11th edition, Merriam-Webster, Inc., Springfield, MA, 2003.

2.4 References for Extracts in Mandatory Sections. (Reserved)

Chapter 3 Definitions

3.1 General. The definitions contained in this chapter shall apply to the terms used in this standard. Where terms are not defined in this chapter or within another chapter, they shall be defined using their ordinarily accepted meanings within the context in which they are used. *Merriam-Webster's Collegiate Dictionary*, 11th edition, shall be the source for the ordinarily accepted meaning.

3.2 NFPA Official Definitions.

3.2.1* Approved. Acceptable to the authority having jurisdiction.

3.2.2* Authority Having Jurisdiction. An organization, office, or individual responsible for enforcing the requirements of a code or standard, or for approving equipment, materials, an installation, or a procedure.

Copyright National Fire Protection Association
Provided by IHS under license with NFPA
No reproduction or networking permitted without license from IHS
Not for Resale

3.2.3 Labeled. Equipment or materials to which has been attached a label, symbol, or other identifying mark of an organization that is acceptable to the authority having jurisdiction and concerned with product evaluation, that maintains periodic inspection of production of labeled equipment or materials, and by whose labeling the manufacturer indicates compliance with appropriate standards or performance in a specified manner.

3.2.4* Listed. Equipment, materials, or services included in a list published by an organization that is acceptable to the authority having jurisdiction and concerned with evaluation of products or services, that maintains periodic inspection of production of listed equipment or materials or periodic evaluation of services, and whose listing states that either the equipment, material, or service meets appropriate designated standards or has been tested and found suitable for a specified purpose.

3.2.5 Shall. Indicates a mandatory requirement.

3.2.6 Should. Indicates a recommendation or that which is advised but not required.

3.2.7 Standard. A document, the main text of which contains only mandatory provisions using the word "shall" to indicate requirements and which is in a form generally suitable for mandatory reference by another standard or code or for adoption into law. Nonmandatory provisions shall be located in an appendix or annex, footnote, or fine-print note and are not to be considered a part of the requirements of a standard.

3.3 General Definitions.

3.3.1 Arch. The bottom curve of the foot, from the heel to the ball.

3.3.2 Barrier Layer. The component of the ensemble that is intended to provide protection from hazardous liquids.

3.3.3 Biological Agents. Biological materials that are capable of causing acute disease or long-term damage to the human body.

3.3.4 Biological Terrorism Agents. Liquid or particulate agents that can consist of biologically derived toxins or pathogens to inflict lethal or incapacitating casualties.

3.3.5 Body Fluid–Borne Pathogen. An infectious bacterium or virus carried in human, animal, or clinical body fluids, organs, or tissue.

3.3.6 Body Fluids. Fluids that are produced by the body, including, but not limited to, blood, semen, mucus, feces, urine, vaginal secretions, breast milk, amniotic fluid, cerebrospinal fluid, synovial fluid, and pericardial fluid.

3.3.7 Brim. A part of the shell of the helmet extending around the entire circumference of the helmet.

3.3.8 Cargo Pockets. Pockets located on the protective garment exterior.

3.3.9 CBRN. An abbreviation for chemicals, biological agents, and radiological particulate hazards. *(See also 3.3.18, CBRN Terrorism Agents.)*

3.3.10* CBRN Barrier Layer. The component of the ensemble that provides protection against CBRN terrorism agents.

3.3.11 CBRN Technical Rescue Protective Ensemble. Multiple elements of compliant protective clothing and protective equipment designed and configured as an ensemble to provide limited protection in operational settings where exposure to physical, thermal, liquid, and body fluid–borne pathogen hazards, and CBRN agents in vapor, liquid-splash, and particulate forms are expected.

3.3.12 CBRN Technical Rescue Protective Ensemble Elements. The parts that comprise the CBRN technical rescue protective ensemble, that include coats, trousers, coveralls, helmets, hoods, gloves, footwear, respirator, and interface components.

3.3.13 CBRN Technical Rescue Protective Footwear Element. The element of the certified CBRN technical rescue protective ensemble element that provides protection to the foot, ankle, and leg.

3.3.14 CBRN Technical Rescue Protective Garment Element. The coat, trouser, or coverall of the certified CBRN technical rescue protective ensemble that provides protection to the upper and lower torso, arms, and legs.

3.3.15 CBRN Technical Rescue Protective Glove Element. The element of the certified CBRN technical rescue protective ensemble that provides protection to the hand and wrist.

3.3.16 CBRN Technical Rescue Protective Helmet Element. The element of the certified CBRN technical rescue protective ensemble that provides protection to the head.

3.3.17 CBRN Technical Rescue Protective Hood Element. An interface element of the certified CBRN technical rescue protective ensemble that provides protection to the coat/helmet/respirator facepiece area.

3.3.18* CBRN Terrorism Agents. Chemicals, biological agents, radiological particulates (also known as "chemical, biological, radiological, nuclear") that could be released as an act of terrorism. *(See also 3.3.21, Chemical Terrorism Agents; 3.3.4, Biological Terrorism Agents; and 3.3.87, Radiological Particulate Terrorism Agents.)*

3.3.19 Certification Organization. An independent, third-party organization that determines product compliance with the requirements of this standard with a labeling/listing/follow-up program.

3.3.20 Certification/Certified. A system whereby a certification organization determines that a manufacturer has demonstrated the ability to produce a product that complies with the requirements of this standard, authorizes the manufacturer to use a label on listed products that comply with the requirements of this standard, and establishes a follow-up program conducted by the certification organization as a check on the methods the manufacturer uses to determine continued compliance of labeled and listed products with the requirements of this standard.

3.3.21 Chemical Terrorism Agents. Liquid, solid, gaseous, and vapor chemical warfare agents and toxic industrial chemicals used to inflict lethal or incapacitating casualties, generally on a civilian population as a result of a terrorist attack.

3.3.22 Coat. See 3.3.14, CBRN Technical Rescue Protective Garment Element; 3.3.92, Rescue and Recovery Technical Rescue Protective Garment Element; and 3.3.124, Utility Technical Rescue Protective Garment Element.

3.3.23 Collar. The portion of a coat or coverall that encircles the neck.

Copyright National Fire Protection Association
Provided by IHS under license with NFPA
No reproduction or networking permitted without license from IHS
Not for Resale

3.3.24 Collar Lining. That part of collar fabric composite that is next to the skin when the collar is closed in the raised position.

3.3.25 Compliance/Compliant. Meeting or exceeding all applicable requirements of this standard.

3.3.26 Component(s). Any material, part, or subassembly used in the construction of the compliant product.

3.3.27 Composite. The layer or layers of materials or components.

3.3.28 Confined Space Entry. An activity of rescue that takes place in a space that is large enough and so configured that a person can bodily enter and perform assigned work, that has limited restricted means for entry or exit (e.g., tanks, vessels, silos, storage bins, hoppers, vaults, and pits), and that is not designed for continuous occupancy.

3.3.29 Coverall. See 3.3.14, CBRN Technical Rescue Protective Garment Element; 3.3.92, Rescue and Recovery Technical Rescue Protective Garment Element; and 3.3.124, Utility Technical Rescue Protective Garment Element.

3.3.30 Drip. To run or fall in drops or blobs.

3.3.31 Element(s). See 3.3.33, Ensemble Elements.

3.3.32 Energy Absorbing System. Materials or systems used to attenuate impact energy.

3.3.33 Ensemble Elements. The certified parts of an ensemble that provide protection to the upper and lower torso, arms, legs, head, hands, and feet.

3.3.34 Flame Resistance. The property of a material whereby combustion is prevented, terminated, or inhibited following the application of a flaming or nonflaming source of ignition, with or without subsequent removal of the ignition source. Flame resistance can be an inherent property of a material, or it can be imparted by specific treatment.

3.3.35 Flammable or Explosive Atmospheres. Atmospheres containing solids, liquids, vapors, or gases at concentrations that will burn or explode if ignited.

3.3.36 Flash Fire. A fire that rapidly spreads through a diffuse fuel, such as a dust, gas, or the vapors of an ignitable liquid, without the production of damaging pressure.

3.3.37 Follow-Up Program. The sampling, inspections, tests, or other measures conducted by the certification organization on a periodic basis to determine the continued compliance of labeled and listed products that are being produced by the manufacturer to the requirements of this standard.

3.3.38 Footwear. See 3.3.91, Rescue and Recovery Technical Rescue Protective Footwear Element.

3.3.39 Footwear Upper. The portion of the protective footwear element or item that includes, but is not limited to, the toe, vamp, quarter, shaft, collar, and throat, but not including the sole with heel, puncture-resistant device, and insole.

3.3.40 Garment. See 3.3.14, CBRN Technical Rescue Utility Protective Garment Element; 3.3.92, Rescue and Recovery Technical Rescue Protective Garment Element; and 3.3.124, Utility Technical Rescue Protective Garment Element.

3.3.41 Garment Closure. The garment component designed and configured to allow the wearer to don (put on) and doff (take off) the garment.

3.3.42 Garment Closure Assembly. The combination of the garment closure and the seam attaching the garment closure to the garment, including any protective flap or cover.

3.3.43 Garment Material. The primary protective material(s) used in the construction of garments.

3.3.44 Gauntlet. An interface component of the protective glove element that provides limited protection to the coat/glove interface area.

3.3.45 Glove. See 3.3.15, CBRN Technical Rescue Protective Glove Element; 3.3.93, Rescue and Recovery Technical Rescue Protective Glove Element; and 3.3.125, Utility Technical Rescue Protective Glove Element.

3.3.46 Glove Body. The part of the glove that extends from the tip of the fingers to 25 mm (1 in.) beyond the wrist crease.

3.3.47 Glove Gauntlet. See 3.3.44, Gauntlet.

3.3.48 Glove Liner. The innermost component of the glove body composite that comes in contact with the wearer's skin.

3.3.49 Goggles. The component that provides protection to the wearer's eyes and a portion of the wearer's face.

3.3.50 Hardware. Nonfabric components of the protective clothing or equipment, including, but not limited to, those made of metal or plastic.

3.3.51 Headband. The portion of the helmet suspension that encircles the head.

3.3.52 Headform. A device that simulates the configuration of the human head.

3.3.53 Helmet. See 3.3.16, CBRN Technical Rescue Protective Helmet Element; 3.3.95, Rescue and Recovery Technical Rescue Protective Helmet Element; and 3.3.127, Utility Technical Rescue Protective Helmet Element.

3.3.54 Helmet Positioning Index. The distance, as specified by the manufacturer, from the lowest point of the brow opening at the lateral midpoint of the helmet to the basic plane of the headform when the helmet is firmly positioned on the headform.

3.3.55 Hood. See 3.3.17, CBRN Technical Rescue Protective Hood Element.

3.3.56 Insole. The inner component of the footwear upon which the foot rests.

3.3.57 Interface Area. An area of the body where the protective garments, helmet, gloves, footwear, or SCBA facepiece meet. Interface areas include, but are not limited to, the coat/helmet/SCBA facepiece area, the coat/trouser area, the coat/glove area, and the trouser/footwear area.

3.3.58* Interface Component(s). Any material, part, or subassembly used in the construction of the compliant product that provides limited protection to interface areas.

3.3.59 Ladder Shank. See 3.3.100, Shank.

3.3.60 Liquid-Borne Pathogen. An infectious bacteria or virus carried in human, animal, or clinical body fluids, organs, or tissues.

3.3.61 Major A Seam. See 3.3.98.1.

3.3.62 Major B Seam. See 3.3.98.2.

Copyright National Fire Protection Association
Provided by IHS under license with NFPA
No reproduction or networking permitted without license from IHS
Not for Resale

3.3.63 Manufacturer. The entity that directs and controls any of the following: compliant product design, compliant product manufacturing, or compliant product quality assurance; or the entity that assumes the liability for the compliant product or provides the warranty for the compliant product.

3.3.64 Melt. A response to heat by a material resulting in evidence of flowing or dripping.

3.3.65 Midsagittal Plane. The anatomical plane perpendicular to the basic plane and containing the midpoint of the line connecting the notches of the right and left inferior orbital ridges and the midpoint of the line connecting the superior rims of the right and left auditory meatus.

3.3.66 Minor Seam. See 3.3.98.3.

3.3.67 Model. The collective term used to identify a group of individual elements of the same basic design and components from a single manufacturer produced by the same manufacturing and quality assurance procedures that are covered by the same certification.

3.3.68 Nape Device. A component used to aid in helmet retention.

3.3.69 Operations.

3.3.69.1 ***Search Operations.*** Any land-based operations involving the search for victims or body recovery.

3.3.69.2 ***Technical Rescue Operations.*** Those activities directed at locating endangered persons, removing endangered persons from danger, treating the injured at an emergency incident, and providing transport to an appropriate health care facility.

3.3.70 Outer Glove. A secondary glove worn over the glove ensemble element for the purpose of providing CBRN protection.

3.3.71 Outer Shell. The outermost component of an element or item not including trim, hardware, reinforcing material, pockets, wristlet material, accessories, fittings, or suspension systems.

3.3.72 Package. The wrapping or enclosure directly containing the technical rescue incidents element.

3.3.73 Product. The compliant protective ensemble or the compliant elements and the compliant interface elements of the protective ensemble.

3.3.74* Product Label. A marking provided by the manufacturer for each compliant product containing compliant statements, certification statements, manufacturer and model information, or similar data.

3.3.75 Protective Clothing. See 3.3.11, CBRN Technical Rescue Protective Ensemble; 3.3.89, Rescue and Recovery Technical Rescue Protective Ensemble; and 3.3.121, Utility Technical Rescue Protective Ensemble.

3.3.76 Protective Coat. See 3.3.12, CBRN Technical Rescue Protective Ensemble Elements; 3.3.90, Rescue and Recovery Technical Rescue Protective Ensemble Elements; and 3.3.122, Utility Technical Rescue Protective Ensemble Elements.

3.3.77 Protective Coverall. See 3.3.12, CBRN Technical Rescue Protective Ensemble Elements; 3.3.90, Rescue and Recovery Technical Rescue Protective Ensemble Elements; and 3.3.122, Utility Technical Rescue Protective Ensemble Elements.

3.3.78 Protective Ensemble. See 3.3.11, CBRN Technical Rescue Protective Ensemble; 3.3.89, Rescue and Recovery Technical Rescue Protective Ensemble; and 3.3.121, Utility Technical Rescue Protective Ensemble.

3.3.79 Protective Footwear. See 3.3.13, CBRN Technical Rescue Protective Footwear Element; 3.3.91, Rescue and Recovery Technical Rescue Protective Footwear Element; and 3.3.123, Utility Technical Rescue Protective Footwear Element.

3.3.80 Protective Garment. See 3.3.14, CBRN Technical Rescue Protective Garment Element; 3.3.92, Rescue and Recovery Technical Rescue Protective Garment Element; and 3.3.124, Utility Technical Rescue Protective Garment Element.

3.3.81 Protective Glove. See 3.3.15, CBRN Technical Rescue Protective Glove Element; 3.3.93, Rescue and Recovery Technical Rescue Protective Glove Element; and 3.3.125, Utility Technical Rescue Protective Glove Element.

3.3.82 Protective Goggle. See 3.3.126, Utility Technical Rescue Protective Goggle Element.

3.3.83 Protective Helmet. See 3.3.16, CBRN Technical Rescue Protective Helmet Element; 3.3.95, Rescue and Recovery Technical Rescue Protective Helmet Element; and 3.3.127, Utility Technical Rescue Protective Helmet Element.

3.3.84 Protective Trouser. See 3.3.14, CBRN Technical Rescue Protective Garment Element; 3.3.92, Rescue and Recovery Technical Rescue Protective Garment Element; and 3.3.124, Utility Technical Rescue Protective Garment Element.

3.3.85 Puncture-Resistant Device. A reinforcement to the bottom of protective footwear that is designed to provide puncture resistance.

3.3.86 Radiological Agents. Radiation associated with X-rays, alpha, beta, and gamma emissions from radioactive isotopes, or other materials in excess of normal background radiation levels.

3.3.87* Radiological Particulate Terrorism Agents. Particles that emit ionizing radiation in excess of normal background levels, used to inflict lethal or incapacitating casualties, generally on a civilian population as a result of a terrorist attack.

3.3.88 Recovery. An operation involving the retrieval of either (1) the remains of a deceased victim or (2) property, but in no case a living person.

3.3.89* Rescue and Recovery Technical Rescue Protective Ensemble. Multiple elements of compliant protective clothing and protective equipment designed and configured as an ensemble to provide limited protection in operational settings where exposure to physical, thermal, liquid, and body fluid–borne pathogen hazards is expected.

3.3.90 Rescue and Recovery Technical Rescue Protective Ensemble Elements. The parts that comprise the rescue and recovery technical rescue protective ensemble, that include coats, trousers, coveralls, helmets, gloves, footwear, and interface components.

3.3.91 Rescue and Recovery Technical Rescue Protective Footwear Element. The element of the certified rescue and recovery technical rescue protective ensemble that provides protection to the foot, ankle, and lower leg.

3.3.92 Rescue and Recovery Technical Rescue Protective Garment Element. The coat, trouser, or coverall element of the certified rescue and recovery technical rescue protective ensemble that provides protection to the upper and lower torso, arms, and legs.

Copyright National Fire Protection Association
Provided by IHS under license with NFPA
No reproduction or networking permitted without license from IHS
Not for Resale

3.3.93 Rescue and Recovery Technical Rescue Protective Glove Element. The element of the certified rescue and recovery technical rescue protective ensemble that provides protection to the hand and wrist.

3.3.94 Rescue and Recovery Technical Rescue Protective Goggle Element. The element of the certified rescue and recovery technical rescue protective ensemble that provides partial protection to the face and eyes.

3.3.95 Rescue and Recovery Technical Rescue Protective Helmet Element. The element of the certified rescue and recovery technical rescue protective ensemble that provides protection to the head.

3.3.96 Retention System. The complete assembly by which the helmet is retained in position on the head.

3.3.97 Sample. The ensemble, element, item, component, or composite that is conditioned for testing. *(See also 3.3.103, Specimen.)*

3.3.98 Seam. Any permanent attachment of two or more materials, in a line formed by joining the separate material pieces.

3.3.98.1 ***Major A Seam.*** Outermost layer seam assemblies where rupture could reduce the protection of the garment by exposing the garment's inner layers.

3.3.98.2 ***Major B Seam.*** Inner layer seam assemblies where rupture could reduce the protection of the garment by exposing the next layer of the garment, the wearer's station/work uniform, other clothing, or skin.

3.3.98.3 ***Minor Seam.*** Remaining seam assemblies that are not classified as Major A or Major B seams.

3.3.99 Separate. A material response evidenced by splitting or delaminating.

3.3.100 Shank. The component of footwear that provides additional support to the instep.

3.3.101 Shell. See 3.3.71, Outer Shell.

3.3.102 Site Stabilization. Those activities directed at mitigating the dangerous elements of an emergency situation.

3.3.103 Specimen. The conditioned element, item, component, or composite that is tested; specimens are taken from samples. *(See also 3.3.97, Sample.)*

3.3.104 Strap.

3.3.104.1 ***Chin Strap.*** An adjustable strap for the helmet that fits under the chin to help secure the helmet to the head.

3.3.104.2 ***Crown Straps.*** The part of the helmet suspension that passes over the head.

3.3.105 Suspension. The energy attenuating system of the helmet that is made up of the headband and crown strap.

3.3.106 Sweatband. That part of a helmet headband, either integral or attached, that comes in contact with the wearer's forehead.

3.3.107 Technical Rescue Incidents. Complex rescue incidents requiring specially trained personnel and special equipment to complete the mission.

3.3.108 Technical Rescue Protective Ensembles. See 3.3.11, CBRN Technical Rescue Protective Ensemble; 3.3.89, Rescue and Recovery Technical Rescue Protective Ensemble; and 3.3.121, Utility Technical Rescue Protective Ensemble.

3.3.109 Technical Rescue Protective Footwear. See 3.3.13, CBRN Technical Rescue Protective Footwear Elements; 3.3.91, Rescue and Recovery Technical Rescue Protective Footwear Element; and 3.3.123, Utility Technical Rescue Protective Footwear Element.

3.3.110 Technical Rescue Protective Garments. See 3.3.124, Utility Technical Rescue Protective Garment Element; 3.3.92, Rescue and Recovery Technical Rescue Protective Garment Element; and 3.3.14, CBRN Technical Rescue Protective Garment Element.

3.3.111 Technical Rescue Protective Gloves. See 3.3.15, CBRN Technical Rescue Protective Glove Element; 3.3.93, Rescue and Recovery Technical Rescue Protective Glove Element; and 3.3.125, Utility Technical Rescue Protective Glove Element.

3.3.112 Technical Rescue Protective Goggles. See 3.3.94, Rescue and Recovery Technical Rescue Protective Goggle Element, and 3.3.126, Utility Technical Rescue Protective Goggle Element.

3.3.113 Technical Rescue Protective Helmets. See 3.3.16, CBRN Technical Rescue Protective Helmet Element; 3.3.95, Rescue and Recovery Technical Rescue Protective Helmet Element; and 3.3.127, Utility Technical Rescue Protective Helmet Element.

3.3.114 Textile Fabric. A planar structure consisting of yarns or fibers.

3.3.115 Toecap. A reinforcement to the toe area of footwear designed to protect the toes from impact and compression.

3.3.116 Top Line. The top edge of the protective footwear that includes the tongue, gusset, quarter, collar, and shaft.

3.3.117 Torso.

3.3.117.1 ***Lower Torso.*** The area of the body trunk below the waist, excluding the legs, ankles and feet.

3.3.117.2 ***Upper Torso.*** The area of body trunk above the waist and extending to the shoulder, excluding the arms, wrists, and hands.

3.3.118 Toxic Industrial Chemicals. Highly toxic solid, liquid, or gaseous chemicals that have been identified as mass casualty threats that could be used to inflict casualties, generally on a civilian population during a terrorist attack.

3.3.119 Trench/Cave-In Rescue. The activity of rescue during the collapse or cave-in of a trench. A trench is deeper than it is wide.

3.3.120 Trouser. See 3.3.14, CBRN Technical Rescue Protective Garment Element; 3.3.92, Rescue and Recovery Technical Protective Garment Element; and 3.3.124, Utility Technical Rescue Protective Garment Element;

3.3.121 Utility Technical Rescue Protective Ensemble. Multiple elements of protective clothing and protective equipment designed and configured as an ensemble to provide limited protection in operational settings where exposure to physical and thermal hazards are expected.

3.3.122 Utility Technical Rescue Protective Ensemble Elements. The parts that comprise the utility technical rescue protective ensemble, that include coats, trousers, coveralls, helmets, gloves, footwear, and interface components.

Copyright National Fire Protection Association
Provided by IHS under license with NFPA
No reproduction or networking permitted without license from IHS
Not for Resale

3.3.123 Utility Technical Rescue Protective Footwear Element. An element of the utility technical rescue protective ensemble that provides protection to the foot, ankle, and lower leg that is certified to the utility protection requirements.

3.3.124 Utility Technical Rescue Protective Garment Element. The coat, trouser, or coverall of the certified utility technical rescue protective ensemble that provides protection to the upper and lower torso, arms, and legs.

3.3.125 Utility Technical Rescue Protective Glove Element. The element of the certified utility technical rescue protective ensemble that provides protection to the hand and wrist.

3.3.126 Utility Technical Rescue Protective Goggle Element. The element of the certified utility technical rescue protective ensemble that provides partial protection to the face and eyes.

3.3.127 Utility Technical Rescue Protective Helmet Element. The element of the certified utility technical rescue protective ensemble that provides protection to the head.

3.3.128 Vehicle/Person Extrication. The activity of removing a victim from a vehicle at the scene of an accident.

3.3.129 Wear Surface. The bottom of the footwear sole, including the heel.

3.3.130 Wristlet. The interface component of the protective element or item that provides limited protection to the coat/glove interface area.

Chapter 4 Certification

4.1 General.

4.1.1 The process of certification for protective ensembles and ensemble elements as being compliant with NFPA 1951 shall meet the requirements of Section 4.1, General; Section 4.2, Certification Program; Section 4.3, Inspection and Testing; Section 4.4, Annual Verification of Product Compliance; Section 4.5, Manufacturers' Quality Assurance Program; Section 4.6, Hazards Involving Compliant Product; Section 4.7, Manufacturers' Investigation of Complaints and Returns; and Section 4.8, Manufacturers' Safety Alert and Product Recall Systems.

4.1.2 All compliant protective ensembles and ensemble elements that are labeled as being compliant with this standard shall meet or exceed all applicable requirements specified in this standard and shall be certified.

4.1.2.1 The certification organization shall only permit the certification of complete CBRN protective ensembles that include protective garments, protective helmets, protective gloves, protective footwear, and interface components.

4.1.2.2 The certification organization shall further require that the CBRN protective ensemble manufacturer specify the respiratory protection for the ensemble.

4.1.3 All certification shall be performed by a certification organization that meets at least the requirements specified in Section 4.2, Certification Program, and that is accredited for personal protective equipment in accordance with ISO 65, *General requirements for bodies operating product certification systems.* The accreditation shall be issued by an accreditation body operating in accordance with ISO 17011, *General requirements for accreditation bodies accrediting conformity assessment bodies.*

4.1.4* Manufacturers shall not claim compliance with portions or segments of the requirements of this standard and shall not use the NFPA name or the name or identification of this standard, NFPA 1951, in any statements about their respective product(s) unless the product(s) is certified as compliant to this standard.

4.1.5 All compliant protective ensembles and ensemble elements shall be labeled.

4.1.6 All compliant protective ensembles and ensemble elements shall be listed by the certification organization. The listing shall uniquely identify the certified product, for example, by style, model number, or part number.

4.1.7 All compliant protective ensembles and ensemble elements shall also have a product label that meets the requirements specified in Section 5.1, Product Label Requirements.

4.1.8 The certification organization's label, symbol, or identifying mark shall be attached to the product label, shall be part of the product label, or shall be immediately adjacent to the product label.

4.1.9 The certification organization shall not issue any new certifications to the 2001 edition of this standard on or after the NFPA effective date for the 2007 edition, which is 20 December 2006.

4.1.10 The certification organization shall not permit any manufacturer to continue to label any protective ensembles or ensemble elements that are certified as compliant with the 2001 edition of this standard on or after 31 August 2007.

4.1.11 The certification organization shall require manufacturers to remove all certification labels and product labels indicating compliance with the 2001 edition of this standard from all protective ensembles and ensemble elements that are under the control of the manufacturer on 31 August 2007, and the certification organization shall verify that this action is taken.

4.2 Certification Program.

4.2.1* The certification organization shall not be owned or controlled by manufacturers or vendors of the product being certified.

4.2.2 The certification organization shall be primarily engaged in certification work and shall not have a monetary interest in the product's ultimate profitability.

4.2.3 The certification organization shall be accredited for personal protective equipment in accordance with ISO 65, *General requirements for bodies operating product certification systems.* The accreditation shall be issued by an accreditation body operating in accordance with ISO 17011, *General requirements for accreditation bodies accrediting conformity assessment bodies.*

4.2.4 The certification organization shall refuse to certify products to this standard that do not comply with all applicable requirements of this standard.

4.2.5* The contractual provisions between the certification organization and the manufacturer shall specify that certification is contingent on compliance with all applicable requirements of this standard.

4.2.5.1 The certification organization shall not offer or confer any conditional, temporary, or partial certifications.

Copyright National Fire Protection Association
Provided by IHS under license with NFPA
No reproduction or networking permitted without license from IHS
Not for Resale

4.2.5.2 Manufacturers shall not be authorized to use any label or reference to the certification organization on products that are not compliant with all applicable requirements of this standard.

4.2.6* The certification organization shall have laboratory facilities and equipment available for conducting proper tests to determine product compliance.

4.2.6.1 The certification organization laboratory facilities shall have a program in place and functioning for calibration of all instruments, and procedures shall be in use to ensure proper control of all testing.

4.2.6.2 The certification organization laboratory facilities shall follow good practice regarding the use of laboratory manuals, form data sheets, documented calibration and calibration routines, performance verification, proficiency testing, and staff qualification and training programs.

4.2.7 The certification organization shall require the manufacturer to establish and maintain a quality assurance program that meets the requirements of Section 4.5, Manufacturer's Quality Assurance Program.

4.2.7.1* The certification organization shall require the manufacturer to have a product recall system specified in Section 4.8, Manufacturers' Safety Alert and Product Recall Systems, as part of the manufacturer's quality assurance program.

4.2.7.2 The certification organization shall audit the manufacturer's quality assurance program to ensure that the quality assurance program provides continued product compliance with this standard.

4.2.8 The certification organization and the manufacturer shall evaluate any changes affecting the form, fit, or function of the compliant product to determine its continued certification to this standard.

4.2.9* The certification organization shall have a follow-up inspection program of the manufacturing facilities of the compliant product with at least two random and unannounced visits per 12-month period.

4.2.9.1 As part of the follow-up inspection program, the certification organization shall select sample compliant product at random from the manufacturer's production line, from the manufacturer's in-house stock, or from the open market.

4.2.9.2 The sample product shall be evaluated by the certification organization to verify the product's continued compliance in order to assure that the materials, components, and manufacturing quality assurance systems are consistent with the materials, components, and manufacturing quality assurance that were inspected and tested by the certification organization during certification and recertification.

4.2.9.3 The certification organization shall be permitted to conduct specific testing to verify the products' continued compliance.

4.2.9.4 For products, components, and materials where prior testing, judgment, and experience of the certification organization have shown the result to be in jeopardy of not complying with this standard, the certification organization shall conduct more frequent testing of the sample product, components, and materials acquired in accordance with 4.2.9.1 against the applicable requirements of this standard.

4.2.10 The certification organization shall have in place a series of procedures, as specified in Section 4.6, Hazards Involving Compliant Product, that address report(s) of situation(s) in which a compliant product is subsequently found to be hazardous.

4.2.11 The certification organization's operating procedures shall provide a mechanism for the manufacturer to appeal decisions. The procedures shall include the presentation of information from both sides of a controversy to a designated appeals panel.

4.2.12 The certification organization shall be in a position to use legal means to protect the integrity of its name and label. The name and label shall be registered and legally defended.

4.3 Inspection and Testing.

4.3.1 For both initial certification and recertification of protective ensembles and ensemble elements, the certification organization shall conduct both inspection and testing as specified in this section.

4.3.2 All inspections, evaluations, conditioning, and testing for certification or for recertification shall be conducted by a certification organization's testing laboratory that is accredited in accordance with the requirements of ISO 17025, *General requirements for the competence of calibration and testing laboratories*.

4.3.2.1 The certification organization's testing laboratory's scope of accreditation to ISO 17025, *General requirements for the competence of testing and calibration laboratories*, shall encompass testing of personal protective equipment.

4.3.2.2 The accreditation of a certification organization's testing laboratory shall be issued by an accreditation body operating in accordance with ISO 17011, *General requirements for accreditation bodies accrediting conformity assessment bodies*.

4.3.3 A certification organization shall be permitted to utilize conditioning and testing results conducted by a product or component manufacturer for certification or recertification provided the manufacturer's testing laboratory meets the requirements specified in 4.3.3.1 through 4.3.3.5.

4.3.3.1 The manufacturer's testing laboratory shall be accredited in accordance with the requirements of ISO 17025, *General requirements for the competence of testing and calibration laboratories*.

4.3.3.2 The manufacturer's testing laboratory's scope of accreditation to ISO 17025, *General requirements for the competence of testing and calibration laboratories*, shall encompass testing of personal protective equipment.

4.3.3.3 The accreditation of a manufacturer's testing laboratory shall be issued by an accreditation body operating in accordance with ISO 17011, *General requirements for accreditation bodies accrediting conformity assessment bodies*.

4.3.3.4 The certification organization shall approve the manufacturer's testing laboratory.

4.3.3.5 The certification organization shall determine the level of supervision and witnessing of the conditioning and testing for certification or recertification conducted at the manufacturer's testing laboratory.

4.3.4 Sampling levels for testing and inspection shall be established by the certification organization and the manufacturer to ensure a reasonable and acceptable reliability at a reasonable and acceptable confidence level that products cer-

Copyright National Fire Protection Association
Provided by IHS under license with NFPA
No reproduction or networking permitted without license from IHS
Not for Resale

tified to this standard are compliant, unless such sampling levels are specified herein.

4.3.5 Inspection by the certification organization shall include a review of all product labels to ensure that all required label attachments, compliance statements, certification statements, and other product information are at least as specified for the protective ensemble and ensemble elements in Section 5.1, Product Label Requirements.

4.3.6 Inspection by the certification organization shall include an evaluation of any symbols and pictorial representations used on product labels or in user information, as permitted by 5.1.5, to ensure that the symbols are clearly explained in the product's user information package.

4.3.7 Inspection by the certification organization shall include a review of the user information required by Section 5.2 to ensure that the information has been developed and is available.

4.3.8 Inspection by the certification organization for determining compliance with the design requirements specified in Chapter 6 shall be performed on whole or complete products.

4.3.9 Testing to determine product compliance with the performance requirements specified in Chapter 7 shall be conducted by the certification organization in accordance with the specified testing requirements of Chapter 8.

4.3.9.1 Testing shall be performed on specimens representative of materials and components used in the actual construction of the protective ensemble and ensemble element.

4.3.9.2 The certification organization also shall be permitted to use sample materials cut from a representative product.

4.3.10 The certification organization shall accept from the manufacturer, for evaluation and testing for certification, only product or product components that are the same in every respect as the actual final product or product component.

4.3.11 The certification organization shall not allow any modifications, pretreatment, conditioning, or other such special processes of the product or any product component prior to the product's submission for evaluation and testing by the certification organization.

4.3.12 The certification organization shall not allow the substitution, repair, or modification, other than as specifically permitted herein, of any product or any product component during testing.

4.3.13 The certification organization shall not allow test specimens that have been conditioned and tested for one method to be reconditioned and tested for another test method unless specifically permitted in the test method.

4.3.14 The certification organization shall test ensemble elements with the specific ensemble(s) with which they are to be certified.

4.3.15 Any change in the design, construction, or material of a compliant product shall necessitate new inspection and testing to verify compliance to all applicable requirements of this standard that the certification organization determines can be affected by such change. This recertification shall be conducted before labeling the modified product as being compliant with this standard.

4.3.16 The manufacturer shall maintain all design and performance inspection and test data from the certification organization used in the certification of the manufacturer's compliant product. The manufacturer shall provide such data, upon request, to the purchaser or authority having jurisdiction.

4.4 Annual Verification of Product Compliance.

4.4.1 All individual elements of the protective ensemble that are labeled as being compliant with this standard shall undergo recertification on an annual basis. This recertification shall include the following:

(1) Inspection and evaluation to all design requirements as required by this standard on all manufacturer models and components
(2) Testing to all performance requirements as required by this standard on all manufacturer models and components within the following protocol:
   (a) When a test method incorporates testing both before and after the laundering precondition specified in 8.1.3 and the test generates quantitative results, recertification testing shall be limited to the conditioning that yielded the worst case test result during the initial certification for the model or component.
   (b) Where a test method incorporates testing both before and after the laundering precondition specified in 8.1.3 and the test generates nonquantitative results, recertifications shall be limited to a single conditioning procedure in any given year. Subsequent annual recertifications shall cycle through the remaining conditioning procedures to ensure that all required conditionings are included over time.
   (c) Where a test method requires the testing on three specimens, a minimum of one specimen shall be tested for annual recertification.
   (d) Where a test method requires the testing of five or more specimens, a minimum of two specimens shall be tested for annual recertification.

4.4.2 Samples of manufacturer models and components for recertification acquired from the manufacturer or component supplier during random and unannounced visits as part of the follow-up inspection program in accordance with 4.2.9 shall be permitted to be used toward annual recertification.

4.4.3 The manufacturer shall maintain all design and performance inspection and test data from the certification organization used in the recertification of manufacturer models and components. The manufacturer shall provide such data, upon request, to the purchaser or authority having jurisdiction.

4.5* Manufacturers' Quality Assurance Program.

4.5.1 The manufacturer shall provide and operate a quality assurance program that meets the requirements of this section and that includes a product recall system as specified in 4.2.7.1, and Section 4.8, Manufacturers' Safety Alert and Product Recall Systems.

4.5.2 The operation of the quality assurance program shall evaluate and test compliant product production to the requirements of this standard to assure production remains in compliance.

4.5.3 The manufacturer shall be registered to ISO 9001, *Quality management systems — Requirements.*

4.5.3.1 Registration to the requirements of ISO 9001, *Quality management systems — Requirements,* shall be conducted by a registrar that is accredited for personal protective equipment.

Copyright National Fire Protection Association
Provided by IHS under license with NFPA
No reproduction or networking permitted without license from IHS
Not for Resale

4.5.3.2 Where the registrar specified in 4.5.3.1 is currently accredited for personal protective equipment in accordance with the 1996 edition of ISO Guide 62, *General requirements for bodies operating assessment and certification/registration of quality systems,* that accreditation shall be permitted until 14 September 2008.

4.5.3.3 Not later than 14 September 2008, registrars specified in 4.5.3.1 shall be accredited for personal protective equipment in accordance with the 2006 edition of ISP/IEC 17021, *Conformity assessment — Requirements for bodies providing audit and certification of management systems.*

4.5.3.4 Any new accreditations for registrars specified in 4.5.3.1 for personal protective equipment shall only be in accordance with the 2006 edition of ISO/IEC 17021, *Conformity assessment — Requirements for bodies providing audit and certification of management systems.*

4.5.4* Any entity that meets the definition of *manufacturer* specified in Section 3.3, General Definitions, and therefore is considered to be the "manufacturer" but does not manufacture or assemble the compliant product, shall meet the requirements specified in this section.

4.5.5* Where the manufacturer uses subcontractors in the construction or assembly of the compliant product, the locations and names of all subcontractor facilities shall be documented, and the documentation shall be provided to the manufacturer's ISO registrar and the certification organization.

4.6 Hazards Involving Compliant Product.

4.6.1* The certification organization shall establish procedures to be followed where situation(s) are reported in which a compliant product is subsequently found to be hazardous. These procedures shall comply with the provisions of ISO Guide 27, *Guidelines for corrective action to be taken by a certification body in the event of misuse of its mark of conformity*, and as modified herein.

4.6.2* Where a report of a hazard involved with a compliant product is received by the certification organization, the validity of the report shall be investigated.

4.6.3 With respect to a compliant product, a hazard shall be a condition or create a situation that results in exposing life, limb, or property to an imminently dangerous or dangerous condition.

4.6.4 Where a specific hazard is identified, the determination of the appropriate action for the certification organization and the manufacturer to undertake shall take into consideration the severity of the hazard and its consequences to the safety and health of users.

4.6.5 Where it is established that a hazard is involved with a compliant product, the certification organization shall determine the scope of the hazard, including products, model numbers, serial numbers, factory production facilities, production runs, and quantities involved.

4.6.6 The certification organization's investigation shall include, but not be limited to, the extent and scope of the problem as it might apply to other compliant products or compliant product components manufactured by other manufacturers or certified by other certification organizations.

4.6.7 The certification organization shall also investigate reports of a hazard where a compliant product is gaining widespread use in applications not foreseen when the standard was written, such applications in turn being ones for which the product was not certified, and no specific scope of application has been provided in the standard, and no limiting scope of application was provided by the manufacturer in written material accompanying the compliant product at the point of sale.

4.6.8 The certification organization shall require the manufacturer of the compliant product, or the manufacturer of the compliant product component if applicable, to assist the certification organization in the investigation and to conduct its own investigation as specified in Section 4.7, Manufacturers' Investigation of Complaints and Returns.

4.6.9 Where the facts indicating a need for corrective action are conclusive and the certification organization's appeal procedures referenced in 4.2.11 have been followed, the certification organization shall initiate corrective action immediately, provided there is a manufacturer to be held responsible for such action.

4.6.10 Where the facts are conclusive and corrective action is indicated, but there is no manufacturer to be held responsible, such as when the manufacturer is out of business or the manufacturer is bankrupt, the certification organization shall immediately notify relevant governmental and regulatory agencies and issue a notice to the user community about the hazard.

4.6.11* Where the facts are conclusive and corrective action is indicated, the certification organization shall take one or more of the following corrective actions:

(1) Notification of parties authorized and responsible for issuing a safety alert when, in the opinion of the certification organization, such a notification is necessary to inform the users
(2) Notification of parties authorized and responsible for issuing a product recall when, in the opinion of the certification organization, such a recall is necessary to protect the users
(3) Removal of the mark of certification from the product
(4) Where a hazardous condition exists and it is not practical to implement 4.6.11(1), 4.6.11(2), or 4.6.11(3), or the responsible parties refuse to take corrective action, the certification organization shall notify relevant governmental and regulatory agencies and issue a notice to the user community about the hazard

4.6.12 The certification organization shall provide a report to the organization or individual identifying the reported hazardous condition and notify them of the corrective action indicated, or that no corrective action is indicated.

4.6.13* Where a change to an NFPA standard(s) is felt to be necessary, the certification organization shall also provide a copy of the report and corrective actions indicated to the NFPA, and shall also submit either a public proposal for a proposed change to the next revision of the applicable standard, or a proposed temporary interim amendment (TIA) to the current edition of the applicable standard.

4.7 Manufacturers' Investigation of Complaints and Returns.

4.7.1 Manufacturers shall provide corrective action in accordance with ISO 9001, *Quality management systems — Requirements*, for investigating written complaints and returned products.

4.7.2 Manufacturers' records of returns and complaints related to safety issues shall be retained for at least 5 years.

4.7.3 Where the manufacturer discovers, during the review of specific returns or complaints, that a compliant product or

Copyright National Fire Protection Association
Provided by IHS under license with NFPA
No reproduction or networking permitted without license from IHS
Not for Resale

compliant product component can constitute a potential safety risk to end users that is possibly subject to a safety alert or product recall, the manufacturer shall immediately contact the certification organization and provide all information about their review to assist the certification organization with their investigation.

4.8 Manufacturers' Safety Alert and Product Recall Systems.

4.8.1 Manufacturers shall establish a written safety alert system and a written product recall system that describes the procedures to be used in the event that it decides, or is directed by the certification organization, to either issue a safety alert or to conduct a product recall.

4.8.2 The manufacturers' safety alert and product recall system shall provide the following:

(1) The establishment of a coordinator and responsibilities by the manufacturer for the handling of safety alerts and product recalls
(2) A method of notifying all dealers, distributors, purchasers, users, and the NFPA about the safety alert or product recall that can be initiated within a one week period following the manufacturer's decision to issue a safety alert or to conduct a product recall, or after the manufacturer has been directed by the certification organization to issue a safety alert or conduct a product recall
(3) Techniques for communicating accurately and understandably the nature of the safety alert or product recall and in particular the specific hazard or safety issue found to exist
(4) Procedures for removing a product that is recalled and for documenting the effectiveness of the product recall
(5) A plan for either repairing, replacing, or compensating purchasers for returned product.

Chapter 5 Labeling and Information

5.1 Product Label Requirements.

5.1.1* Each element of the protective ensemble shall have a product label or labels permanently and conspicuously located inside each element when the element is properly assembled with all layers and components in place.

5.1.2 Multiple label pieces shall be permitted in order to carry all statements and information required to be on the product label; however, all label pieces that make up the product label shall be located adjacent to each other.

5.1.3* The certification organization's label, symbol, or identifying mark shall be permanently attached to the product label or shall be part of the product label. All letters shall be at least 2.5 mm (3⁄32 in.) high. The label, symbol, or identifying mark shall be at least 6 mm (1⁄4 in.) in height and shall be placed in a conspicuous location.

5.1.4 All worded portions of the required product label shall be printed at least in English.

5.1.5 Symbols and other pictorial graphic representations shall be permitted to be used to supplement worded statements on the product label(s) where the symbols and pictorial graphic representations are clearly explained in the product's user information package.

5.1.6 The statement specified in 5.1.6.3 or 5.1.6.4 for the specific element being certified shall be printed legibly on the product label. The appropriate term for the element (garment, helmet, glove, footwear, goggles, interface) shall be inserted in this compliance statement text where indicated. All letters shall be at least 2.5 mm (3⁄8 in.) in height.

5.1.6.1 The line that reads "CBRN PROTECTIVE ENSEMBLE FOR TECHNICAL RESCUE INCIDENTS" specified in 5.1.6.4 shall be in letters at least 10 mm (3⁄32 in.) in height.

5.1.6.2 Where the requirements for the utility protective ensemble helmet and footwear elements and for the rescue and recovery protective ensemble helmet and footwear elements are identical for both types of ensembles, the product label text for both "utility and rescue and recovery ensemble elements," as detailed in 5.1.6.3, shall be permitted to be selected.

5.1.6.3 For utility protective ensemble elements and for rescue and recovery protective ensemble elements, the following statement shall be printed as specified in 5.1.6:

"THIS [*insert* "UTILITY," *or* "RESCUE AND RECOVERY," *or both* "UTILITY AND RESCUE AND RECOVERY" *here*] PROTECTIVE ENSEMBLE [*insert appropriate element term here*] ELEMENT MEETS THE REQUIREMENTS OF NFPA 1951, STANDARD ON PROTECTIVE ENSEMBLES FOR TECHNICAL RESCUE INCIDENTS, 2007 EDITION.

DO NOT REMOVE THIS LABEL."

5.1.6.4 For CBRN protective ensembles, the following statement shall be printed as specified in 5.1.6:

"CBRN PROTECTIVE ENSEMBLE FOR TECHNICAL RESCUE INCIDENTS

THIS ENSEMBLE IS NOT INTENDED AS PART OF A HAZARDOUS MATERIALS PROTECTIVE ENSEMBLE.

THIS CBRN PROTECTIVE ENSEMBLE *[insert appropriate element term here]* ELEMENT MEETS THE CBRN [*insert appropriate element term here*] REQUIREMENTS OF NFPA 1951, STANDARD ON PROTECTIVE ENSEMBLES FOR TECHNICAL RESCUE INCIDENTS, 2007 EDITION, WHEN WORN TOGETHER WITH THE OTHER SPECIFIED ELEMENTS AND INTERFACE COMPONENTS OF THE CBRN ENSEMBLE.

DO NOT REMOVE THIS LABEL."

5.1.7 The following information shall also be printed legibly on the product label, and all letters shall be at least 1.6 mm (1⁄16 in.) high:

(1) Manufacturer's name, identification, or designation
(2) Manufacturer's address
(3) Country of manufacture
(4) Manufacturer's garment identification number, lot number, or serial number
(5) Month and year of manufacture (not coded)
(6) Model name, number, or design
(7) Size
(8) Garment material(s)
(9) Cleaning precautions

5.1.8 Supplementary Product Labels.

5.1.8.1 Where the garment's outer shell and linings can be separated from each other, each separable layer shall have a supplementary product label permanently attached.

Copyright National Fire Protection Association
Provided by IHS under license with NFPA
No reproduction or networking permitted without license from IHS
Not for Resale

5.1.8.2 Supplementary product labels shall also meet the requirements of 5.1.4 and 5.1.5.

5.1.9 Specific Requirements for CBRN Protection Ensemble for Technical Rescue Incidents Garment Elements.

5.1.9.1 The CBRN protective ensemble garment elements meeting the requirements for protection against CBRN terrorism agents shall also list those parts and components of the certified ensemble element that are required to meet this standard.

5.1.9.2 This list shall be on the product label by manufacturer name and model number after the following statement,

FOR COMPLIANCE WITH THE CBRN PROTECTIVE ENSEMBLE FOR TECHNICAL RESCUE INCIDENTS REQUIREMENTS OF NFPA 1951, THE FOLLOWING PROTECTIVE PARTS AND COMPONENTS MUST BE WORN IN CONJUNCTION WITH THIS GARMENT:

[*list parts and components here*]

5.1.9.3 All letters shall be at least 2.5 mm (3⁄32 in.) in height.

5.1.10 Specific Requirements for Technical Rescue Incidents Protective Goggles.

5.1.10.1 For goggles only, the product label shall be permitted to be placed on the package.

5.1.10.2 The package containing the smallest number of goggles elements from which the user withdraws product for use shall have a package product label.

5.1.10.3 The package product label shall be permanently and conspicuously located on the outside of the package or printed on the package.

5.1.10.4 The label shall not be removed, obscured, or otherwise mutilated by the opening of the package when the package is opened as intended.

5.1.10.5 Where goggles have a package label, the certification organization's label, symbol, or identifying mark and at least the following statement shall be legibly printed as the product label on each goggle. All letters and numbers shall be at least 3 mm (⅛ in.) high.

"MEETS NFPA 1951, 2007 EDITION"

5.2 User Information.

5.2.1 The manufacturer shall provide user information, including, but not limited to, warnings, information, and instructions with each element.

5.2.2 The manufacturer shall attach the required user information or packaging containing the user information to the element in such a manner that it is not possible to use the element without being aware of the availability of the information.

5.2.3 The required user information or packaging containing the user information shall be attached to the element so that a deliberate action is necessary to remove it. The element manufacturer shall provide notice that the user information is to be removed ONLY by the end user.

5.2.4* The element manufacturer shall provide at least the following instructions and information with each element:

(1) Pre-use information, including the following:
   (a) Safety considerations
   (b) Limitations of use
   (c) Marking recommendations and restrictions
   (d) A statement that most performance properties of the element cannot be tested by the user in the field
   (e) Warranty information
(2) Preparation for use, including the following:
   (a) Sizing/adjustment
   (b) Recommended storage practices
(3) Inspection, including inspection frequency and details
(4) Don/doff, including the following:
   (a) Donning and doffing procedures
   (b) Sizing and adjustment procedures
   (c) Interface issues
(5) Use, including proper use consistent with 29 CFR 1910.132
(6) Maintenance and cleaning, including the following:
   (a) Cleaning instructions and precautions with a statement advising users not to use garments that are not thoroughly cleaned and dried
   (b) Inspection details
   (c) Maintenance criteria and methods of repair where applicable
   (d) Decontamination procedures for both chemical and biological contamination
(7) Retirement and disposal, including criteria and considerations

5.2.5 For compliant CBRN protective ensembles for technical rescue incidents, the manufacturer shall provide the following additional instruction and information with the ensemble:

(1) A statement that only the ensemble and the specific elements with which the ensemble has been certified must be worn together to ensure that the CBRN protection is provided
(2) A list of the specific elements and interface components that must be worn as part of the CBRN protective ensemble for technical rescue incidents, including each type of CBRN self-contained breathing apparatus (SCBA), CBRN air-purifying respirator (APR), or CBRN powered air-purifying respirator (PAPR) with which the ensemble has been certified
(3) Specific limitations associated with the use of the ensemble for a response involving CBRN hazards, including, but not limited to, a statement that protection against radiological and nuclear hazards is limited to particulates only
(4) Specific care and maintenance provisions associated with properly maintaining the unique performance properties of the ensemble, its elements, or interface components
(5) A statement that if the ensemble is used in an emergency involving CBRN hazards, the ensemble be retired from use and not be further used
(6) When the requirements for CBRN protection necessitate a specific action to engage interface areas, the manufacturer shall provide details explaining those procedures.

Chapter 6 Design Requirements

6.1 Utility Protective Ensemble for Technical Rescue Incidents Design Requirements.

6.1.1 Utility Protective Ensemble Garment Elements.

6.1.1.1 Garments shall have at least the applicable design requirements specified in this section where inspected by the

Copyright National Fire Protection Association
Provided by IHS under license with NFPA
No reproduction or networking permitted without license from IHS
Not for Resale

certification organization as specified in Section 4.3, Inspection Testing.

6.1.1.2 Garments shall be permitted to be single-layer or multiple-layer garments.

6.1.1.3 All garment collars shall remain upright after extension into a vertical position. The coat shall have a collar at least 50 mm (2 in.) in height at any point when measured from the top of the collar down and shall have a closure system. The collar and closure system shall consist of materials that meet all applicable requirements as specified in this section.

6.1.1.4 Garments shall not have turn-up cuffs. Sleeve cuffs shall have a closure system that can be adjusted to provide a snug and secure fit around the wrist when a technical rescue glove is worn.

6.1.1.5 Top-entry pockets shall have cover flaps with a closure system.

6.1.1.6 Pass-through openings of coveralls shall have a closure system that can be easily secured and easily opened by the wearer.

6.1.1.7 Sewing thread utilized in the construction of garments shall be made of an inherently flame-resistant fiber.

6.1.1.8 All garment hardware finish shall be free of rough spots, burrs, and sharp edges.

6.1.1.9 All snaps shall be Style 2 and shall comply with the design and construction requirements of MIL-F-10884G, *Fastener, Snap.*

6.1.1.10 Fastener tape shall meet the requirements of A-A-55126, *Commercial Item Description, Fastener Tapes, Hook and Pile, Synthetic.*

6.1.1.11 Zippers shall meet the physical performance requirements of A-A-55634, *Commercial Item Description, Zippers (Fasteners, Slide Interlocking).*

6.1.1.12 Cargo pockets, where provided, shall have a means to drain water and shall have a means of being fastened in the closed position.

6.1.1.13 All upper torso garments shall have closure systems at the neckline.

6.1.1.14 One-piece coverall torso closure systems shall be continuous from the top of the crotch area to the top of the garment at the neck.

6.1.1.15 Metallic closure systems shall not come in direct contact with the body.

6.1.1.16 Metal components of the garments shall not come in direct contact with the body.

6.1.1.17* Garment Sizing.

6.1.1.17.1 Upper torso garment chest circumferences shall be provided in circumferences from 760 mm to 1270 mm (30 in. to 50 in.) in 50 mm (2 in.) increments or cut to order.

6.1.1.17.2 Upper torso garment sleeve lengths shall be provided in lengths from 760 mm to 915 mm (30 in. to 36 in.) in 25 mm (1 in.) increments or cut to order.

6.1.1.17.3 Lower torso garment waist circumferences shall be provided in circumferences from 660 mm to 1270 mm (26 in. to 50 in.) in 50 mm (2 in.) increments or cut to order.

6.1.1.17.4 Lower torso garment inseam lengths shall be provided in lengths from 660 mm to 890 mm (26 in. to 35 in.) in 25 mm (1 in.) increments or cut to order.

6.1.1.17.5 Men's and women's sizing shall be accomplished by the use of individual patterns for men's and women's garments.

6.1.2 Utility Protective Ensemble Helmet Elements.

6.1.2.1 Helmets shall have at least the applicable design requirements specified in this section where inspected by the certification organization as specified in Section 4.3, Inspection and Testing.

6.1.2.2 Helmets shall consist of material or materials meeting the performance requirements of Section 7.1.2.

6.1.2.3 Suspension shall contain a nape device and shall be removable and replaceable.

6.1.2.3.1 Helmet suspension shall be adjustable in at least 3 mm (⅛ in.) hat size increments, and the size range that can be accommodated shall be marked on the product label.

6.1.2.3.2 With the suspension adjusted to the maximum designated size, there shall be sufficient clearance between the shell and the headband to provide ventilation.

6.1.2.4 A sweatband shall be provided that shall cover at least the forehead portion of the headband. Sweatbands shall be removable and replaceable or shall be integral with the headband.

6.1.2.5 Crown straps shall be provided and, when assembled, shall form a cradle for supporting the helmet on the wearer's head. The crown straps shall be designed so that the distance between the top of the head and the underside of the shell cannot be adjusted to less clearance than the manufacturer's requirements for that specific helmet.

6.1.2.6 Chin straps shall be provided and shall be attached to the helmet shell. Chin straps shall not be less than 13 mm (½ in.) in width.

6.1.2.7 Sewing thread utilized in the construction of helmets shall be made of an inherently flame-resistant fiber.

6.1.2.8 Product labels and any other identification labels or markers used on helmet shells shall be affixed without holes being made through the shell and without the use of any metal parts or metallic labels.

6.1.3 Utility Protective Ensemble Glove Elements.

6.1.3.1 Gloves shall have at least the applicable design requirements specified in this section where inspected by the certification organization as specified in Section 4.3, Inspection and Testing.

6.1.3.2 Gloves shall consist of a material or materials meeting the performance requirements of Section 7.1.3. The composite shall be permitted to be configured as a single layer or multiple layers. If the glove is made up of multiple layers, all layers of the glove shall be individually graded per size.

6.1.3.3 Gloves shall have a wristlet that allows the glove material to fit closely around the wearer's wrist.

6.1.3.4 The glove body shall extend circumferentially not less than 25 mm (1 in.) beyond the wrist crease where measured from the tip of the finger. The location of the wrist crease shall be determined as shown in Figure 6.1.3.4.

Copyright National Fire Protection Association
Provided by IHS under license with NFPA
No reproduction or networking permitted without license from IHS
Not for Resale

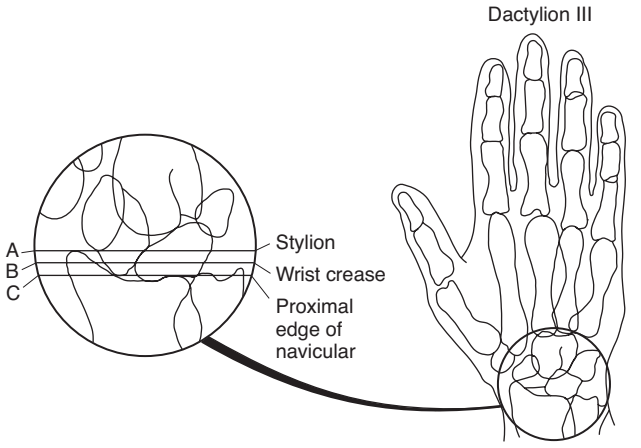

FIGURE 6.1.3.4 Anatomical Landmarks at Base of Hand.

6.1.3.5 Sewing thread utilized in the construction of gloves shall be made of an inherently flame-resistant fiber.

6.1.3.6* In order to label or otherwise represent a glove as compliant with the requirements of this standard, the manufacturer shall provide gloves in not fewer than five separate and distinct sizes.

6.1.4 Utility Protective Ensemble Footwear Elements.

6.1.4.1 Footwear shall have at least the applicable design requirements specified in this section where inspected by the certification organization as specified in Section 4.3, Inspection and Testing.

6.1.4.2 The footwear shall consist of a composite meeting the performance requirements of 7.1.4. The composite shall be permitted to be configured as a continuous or joined single layer or continuous or joined multiple layers. If the footwear is made up of multiple layers, all layers of the footwear shall be individually graded per size.

6.1.4.3 Footwear shall consist of a sole with heel, an upper with lining, an insole with puncture-resistant device, a ladder shank, and a toecap permanently attached.

6.1.4.4 Footwear height shall be a minimum of 200 mm (8 in.). The height shall be determined by measuring inside the boot from the center of the insole at the heel up to a perpendicular reference line extending across the width of the footwear at the highest point of uninterrupted barrier protection. Removable insole inserts shall be removed prior to measurement.

6.1.4.5 Where the footwear is provided with a raised heel, the footwear heel breast shall not be less than 13 mm (½ in.) or more than 25 mm (1 in.). The heel breasting angle shall not be less than 90 degrees or more than 135 degrees. The edges shall not be less than or extend more than 13 mm (½ in.) laterally from the upper at any point.

6.1.4.6 The puncture-resistant device shall cover the maximum area of the insole.

6.1.4.7 Footwear shall have a toecap that extends not less than 50 mm (2 in.) from the front edge of the footwear.

6.1.4.8 Sewing thread utilized in the construction of footwear shall be made of an inherently flame-resistant fiber.

6.1.4.9 Metal parts shall not penetrate from the outside into the lining or insole at any point unless the metal parts are covered.

6.1.4.10 No metal parts, including but not limited to nails or screws, shall be present or utilized in the construction or attachment of the sole with heel to the puncture-resistant device, insole, or upper.

6.1.4.11 Where stud hooks are used, there shall be a minimum of four metal stud hooks on each side of the eyerow.

6.1.4.12 Eyelets, where used, shall be constructed of coated steel, solid brass, brass-coated nickel, or nickel.

6.1.4.13 Footwear shall incorporate a metatarsal impact guard positioned partially over the protective toecap and extended to cover the metatarsal bone area. The metatarsal protection shall be an integral and permanent part of the footwear.

6.1.4.14 Footwear Sizing.

6.1.4.14.1 Footwear shall be available in all the following sizes:

(1) Mens: 6–15, including half sizes, and a minimum of three widths
(2) Womens: 5–10, including half sizes, and a minimum of three widths

6.1.4.14.2 Manufacturers shall be required to establish and provide, upon request, a size conversion chart for each model or style of protective footwear based on toe length, arch length, and foot width as measured on the Brannock Scientific Foot-Measuring Device.

6.1.4.14.3 Full and half sizes in each of the three required widths shall be accomplished by individual and unique lasts to provide proper fit.

6.1.5 Utility Protective Ensemble Goggle Elements.

6.1.5.1 Goggle elements shall meet ANSI Z87.1, *Occupational and Educational Personal Eye and Face Protection Devices*, requirements for Type G (Cover Goggle, No Ventilation), Type H (Cover Goggle, Indirect Ventilation), Type I (Cover Goggle, Direct Ventilation), Type J (Cup Goggle, Direct Ventilation), or Type K (Cup Goggle, Indirect Ventilation).

6.1.5.2 Goggle elements shall be rated as "Z87+" in accordance with ANSI Z87.1.

6.1.5.3 Goggle elements shall be permitted to be attached to the helmet.

6.2 Rescue and Recovery Protective Ensemble for Technical Rescue Incidents Design Requirements.

6.2.1 Rescue and Recovery Protective Ensemble Garment Elements.

6.2.1.1 Garments shall have at least the applicable design requirements specified in this section where inspected by the certification organization as specified in Section 4.3, Inspection Testing.

6.2.1.2 Garments shall be permitted to be single-layer or multiple-layer garments.

6.2.1.3 All garment collars shall remain upright after extension into a vertical position. The coat shall have a collar at least 50 mm (2 in.) in height at any point when measured from the top of the collar down and shall have a closure system. The

Copyright National Fire Protection Association
Provided by IHS under license with NFPA
No reproduction or networking permitted without license from IHS
Not for Resale

collar and closure system shall consist of materials that meet all applicable requirements as specified in this section.

6.2.1.4 Garments shall not have turn-up cuffs. Sleeve cuffs shall have a closure system that can be adjusted to provide a snug and secure fit around the wrist when a technical rescue glove is worn.

6.2.1.5 Rescue and recovery protective ensemble garments shall have a means for securing the liquid barrier to the outer shell.

6.2.1.6 Top-entry pockets shall have cover flaps with a closure system.

6.2.1.7 Pass-through openings of coveralls shall have a closure system that can be easily secured and easily opened by the wearer.

6.2.1.8 Sewing thread utilized in the construction of garments shall be made of an inherently flame-resistant fiber.

6.2.1.9 All garment hardware finish shall be free of rough spots, burrs, and sharp edges.

6.2.1.10 All snaps shall be Style 2 and shall comply with the design and construction requirements of MIL-F-10884G, *Fastener, Snap.*

6.2.1.11 Fastener tape shall meet the requirements of A-A-55126, *Commercial Item Description, Fastener Tapes, Hook and Pile, Synthetic.*

6.2.1.12 Zippers shall meet the physical performance requirements of A-A-55634, *Commercial Item Description, Zippers (Fasteners, Slide Interlocking).*

6.2.1.13 Cargo pockets, where provided, shall have a means to drain water and shall have a means of being fastened in the closed position.

6.2.1.14 All upper torso garments shall have closure systems at the neckline.

6.2.1.15 One-piece coverall torso closure systems shall be continuous from the top of the crotch area to the top of the garment at the neck.

6.2.1.16 Metallic closure systems shall not come in direct contact with the body.

6.2.1.17 Metal components of the garments shall not come in direct contact with the body.

6.2.1.18* Garment Sizing.

6.2.1.18.1 Upper torso garment chest circumferences shall be provided in circumferences from 760 mm to 1270 mm (30 in. to 50 in.) in 50 mm (2 in.) increments or cut to order.

6.2.1.18.2 Upper torso garment sleeve lengths shall be provided in lengths from 760 mm to 915 mm (30 in. to 36 in.) in 25 mm (1 in.) increments or cut to order.

6.2.1.18.3 Lower torso garment waist circumferences shall be provided in circumferences from 660 mm to 1270 mm (26 in. to 50 in.) in 50 mm (2 in.) increments or cut to order.

6.2.1.18.4 Lower torso garment inseam lengths shall be provided in lengths from 660 mm to 890 mm (26 in. to 35 in.) in 25 mm (1 in.) increments or cut to order.

6.2.1.18.5 Men's and women's sizing shall be accomplished by the use of individual patterns for men's and women's garments.

6.2.2 Rescue and Recovery Protective Ensemble Helmet Elements.

6.2.2.1 Helmets shall have at least the applicable design requirements specified in this section where inspected by the certification organization as specified in Section 4.3, Inspection and Testing.

6.2.2.2 Helmets shall consist of material or materials meeting the performance requirements of 7.2.2.

6.2.2.3 Suspension shall contain a nape device and shall be removable and replaceable.

6.2.2.3.1 Helmet suspension shall be adjustable in at least 3 mm (⅛ in.) hat size increments, and the size range that can be accommodated shall be marked on the product label.

6.2.2.3.2 With the suspension adjusted to the maximum designated size, there shall be sufficient clearance between the shell and the headband to provide ventilation.

6.2.2.4 A sweatband shall be provided that shall cover at least the forehead portion of the headband. Sweatbands shall be removable and replaceable or shall be integral with the headband.

6.2.2.5 Crown straps shall be provided and, when assembled, they shall form a cradle for supporting the helmet on the wearer's head. The crown straps shall be designed so that the distance between the top of the head and the underside of the shell cannot be adjusted to less clearance than the manufacturer's requirements for that specific helmet.

6.2.2.6 Chin straps shall be provided and shall be attached to the helmet shell. Chin straps shall not be less than 13 mm (½ in.) in width.

6.2.2.7 Sewing thread utilized in the construction of helmets shall be made of an inherently flame-resistant fiber.

6.2.2.8 Product labels and any other identification labels or markers used on helmet shells shall be affixed without holes being made through the shell and without the use of any metal parts or metallic labels.

6.2.3 Rescue and Recovery Protective Ensemble Glove Elements.

6.2.3.1 Gloves shall have at least the applicable design requirements specified in this section where inspected by the certification organization as specified in Section 4.3, Inspection and Testing.

6.2.3.2 Gloves shall consist of a material or materials meeting the performance requirements of 7.2.3. The composite shall be permitted to be configured as a single layer or multiple layers. If the glove is made up of multiple layers, all layers of the glove shall be individually graded per size.

6.2.3.3 Gloves shall have a wristlet that allows the glove material to fit closely around the wearer's wrist.

6.2.3.4 The glove body shall extend circumferentially not less than 25 mm (1 in.) beyond the wrist crease where measured from the tip of the finger. The location of the wrist crease shall be determined as shown in Figure 6.1.3.4.

6.2.3.5 Sewing thread utilized in the construction of gloves shall be made of an inherently flame-resistant fiber.

6.2.3.6* In order to label or otherwise represent a glove as compliant with the requirements of this standard, the manufacturer shall provide gloves in not fewer than five separate and distinct sizes.

Copyright National Fire Protection Association
Provided by IHS under license with NFPA
No reproduction or networking permitted without license from IHS
Not for Resale

6.2.4 Rescue and Recovery Protective Ensemble Footwear Elements.

6.2.4.1 Footwear shall have at least the applicable design requirements specified in this section where inspected by the certification organization as specified in Section 4.3, Inspection and Testing.

6.2.4.2 The footwear shall consist of a composite meeting the performance requirements of 7.2.4. The composite shall be permitted to be configured as a continuous or joined single layer or continuous or joined multiple layers. If the footwear is made up of multiple layers, all layers of the footwear shall be individually graded per size.

6.2.4.3 Footwear shall consist of a sole with heel, an upper with lining, an insole with puncture-resistant device, a ladder shank, and a toecap permanently attached.

6.2.4.4 Footwear height shall be a minimum of 200 mm (8 in.). The height shall be determined by measuring inside the boot from the center of the insole at the heel up to a perpendicular reference line extending across the width of the footwear at the highest point of uninterrupted barrier protection. Removable insole inserts shall be removed prior to measurement.

6.2.4.5 Where the footwear is provided with a raised heel, the footwear heel breast shall not be less than 13 mm (½ in.) or more than 25 mm (1 in.). The heel breasting angle shall not be less than 90 degrees or more than 135 degrees. The edges shall not be less than or extend more than 13 mm (½ in.) laterally from the upper at any point.

6.2.4.6 The puncture-resistant device shall cover the maximum area of the insole.

6.2.4.7 Footwear shall have a toecap that extends not less than 50 mm (2 in.) from the front edge of the footwear.

6.2.4.8 Sewing thread utilized in the construction of footwear shall be made of an inherently flame-resistant fiber.

6.2.4.9 Metal parts shall not penetrate from the outside into the lining or insole at any point, unless the metal parts are covered.

6.2.4.10 No metal parts, including but not limited to nails or screws, shall be present or utilized in the construction or attachment of the sole with heel to the puncture-resistant device, insole, or upper.

6.2.4.11 Where stud hooks are used, there shall be a minimum of four metal stud hooks on each side of the eyerow.

6.2.4.12 Eyelets, where used, shall be constructed of coated steel, solid brass, brass-coated nickel, or nickel.

6.2.4.13 Footwear shall incorporate a metatarsal impact guard positioned partially over the protective toecap and extended to cover the metatarsal bone area. The metatarsal protection shall be an integral and permanent part of the footwear.

6.2.4.14 Footwear Sizing.

6.2.4.14.1 Footwear shall be available in all the following sizes:

(1) Mens: 6–15, including half sizes, and a minimum of three widths
(2) Womens: 5–10, including half sizes, and a minimum of three widths

6.2.4.14.2 Manufacturers shall be required to establish and provide, upon request, a size conversion chart for each model or style of protective footwear based on toe length, arch length, and foot width as measured on the Brannock Scientific Foot-Measuring Device.

6.2.4.14.3 Full and half sizes in each of the three required widths shall be accomplished by individual and unique lasts to provide proper fit.

6.2.5 Rescue and Recovery Protective Ensemble Goggle Elements.

6.2.5.1 Goggle elements shall meet ANSI Z87.1, *Occupational and Educational Personal Eye and Face Protection Devices*, requirements for Type G (Cover Goggle, No Ventilation), Type H (Cover Goggle, Indirect Ventilation), Type I (Cover Goggle, Direct Ventilation), Type J (Cup Goggle, Direct Ventilation), or Type K (Cup Goggle, Indirect Ventilation).

6.2.5.2 Goggle elements shall be rated as "Z87+" in accordance with ANSI Z87.1.

6.2.5.3 Goggle elements shall be permitted to be attached to the helmet.

6.3 CBRN Protective Ensemble for Technical Rescue Incidents Design Requirements.

6.3.1 CBRN Protective Ensembles.

6.3.1.1 Ensembles shall have at least the applicable design requirements specified in this section where inspected by the certification organization as specified in Section 4.3, Inspection and Testing.

6.3.1.2 Ensembles, including the respirator, shall be designed to protect the wearer's upper and lower torso, head, arms, legs, hands, and feet.

6.3.1.3 Ensemble elements shall include protective garments, protective helmet, protective gloves, protective footwear, interface components, and a protective hood, where the protective hood is not already part of the protective garment.

6.3.1.4 The manufacturer shall specify each respirator that is part of the CBRN protective ensemble. All respirators specified by the ensemble manufacturer for inclusion in the ensemble shall be any of the following:

(1) Certified to NFPA 1981, *Standard on Open-Circuit Self-Contained Breathing Apparatus (SCBA) for Emergency Services*, and certified as CBRN SCBA compliant with the Statement of Standard for NIOSH CBRN SCBA testing by the National Institute for Occupational Safety and Health (NIOSH)
(2) Certified as CBRN APR compliant with the Statement of Standard for NIOSH CBRN SCBA testing by the National Institute for Occupational Safety and Health (NIOSH)
(3) Certified as CBRN PAPR compliant with the Statement of Standard for NIOSH CBRN PAPR testing by the National Institute for Occupational Safety and Health (NIOSH)

6.3.1.5 Ensembles shall be designed to accommodate the respirator(s) as specified in 6.3.1.4 by the manufacturer for the specific ensemble.

6.3.2 CBRN Protective Ensemble Garment Elements.

6.3.2.1 CBRN protective ensemble garment elements shall meet the design requirements specified in 6.2.1.

Copyright National Fire Protection Association
Provided by IHS under license with NFPA
No reproduction or networking permitted without license from IHS
Not for Resale

6.3.2.2 Supplemental garments that are provided to meet the performance requirements of this standard but are not intended to be worn continuously with the wearing of the garment element shall not be permitted.

6.3.2.3 Garments shall be permitted to include integrated booties to protect the wearer's feet in conjunction with outer footwear.

6.3.2.4 Where garments incorporate booties, the booties shall be designed as an extension of the garment leg and shall cover the entire foot and ankle.

6.3.3 CBRN Protective Ensemble Helmet Elements.

6.3.3.1 Where the CBRN barrier layer is provided in a protective hood and provides an interface with the respirator specified by the ensemble manufacturer, the helmet shall not be required to incorporate a CBRN barrier layer.

6.3.3.2 Where the helmet is not required to demonstrate compliance with the CBRN protection requirements, the manufacturer shall not specify a helmet as part of the CBRN protective ensemble.

6.3.3.3 Supplemental helmets that are provided to meet the performance requirements of this standard but are not intended to be worn continuously with the wearing of the helmet shall not be permitted.

6.3.4 CBRN Protective Ensemble Glove Elements.

6.3.4.1 CBRN technical rescue gloves shall meet the design requirements specified in 6.2.3.

6.3.4.2 Supplemental gloves that are provided to meet the performance requirements of this standard but are not intended to be worn continuously with the wearing of the glove element shall not be permitted.

6.3.4.3 Where outer gloves are worn to provide a CBRN barrier layer, the manufacturer shall provide gloves in not fewer than five separate and distinct sizes.

6.3.4.4 If an interface component connects the glove to the coat sleeve in a manner providing continuous thermal protection and demonstrates liquid integrity, then gloves shall not be required to meet the requirements in 6.2.3.3 and 6.2.3.4.

6.3.5 CBRN Protective Ensemble Footwear Elements.

6.3.5.1 CBRN technical rescue footwear shall meet the design requirements in 6.2.4.

6.3.5.2 Where booties are used as part of the ensemble, the manufacturer shall specify types of outer footwear that provide the physical and other performance requirements for footwear as specified in 7.3.2.4, as applicable.

6.3.5.3 Where booties are used as part of the ensemble, the outer footwear shall not be required to have a liner in the upper.

6.3.5.4 Supplemental footwear that is provided to meet the performance requirements of this standard but is not intended to be worn continuously with the wearing of the footwear element shall not be permitted.

6.3.6 CBRN Protective Ensemble Hood Interface Elements. Where a hood interface element is provided for CBRN protection, hood interface elements shall meet the design criteria for structural fire fighting protective hood requirements in Section 6.14 of NFPA 1971, *Standard on Protective Ensembles for Structural Fire Fighting and Proximity Fire Fighting*.

Chapter 7 Performance Requirements

7.1* Utility Protective Ensemble for Technical Rescue Incidents Performance Requirements.

7.1.1 Utility Protective Ensemble Garment Elements.

7.1.1.1 Garment composites shall be tested for total heat loss as specified in Section 8.6, Total Heat Loss Test, and shall have a total heat loss equal to or greater than 650 W/m^2.

7.1.1.2 Textile fabrics and linings used for garments shall be tested for tear resistance as specified in Section 8.7, Tear Resistance Test, and shall have a tear resistance of not less than 30 N (6.75 lbf).

7.1.1.3 Outer shell fabric shall be tested for breaking strength as specified in Section 8.8, Breaking Strength Test, and shall have a breaking strength of not less than 400 N (90 lbf).

7.1.1.4 Garment outer shell fabrics shall be tested for abrasion resistance as specified in Section 8.9, Abrasion Resistance Test 1, and shall have an ending breaking strength of not less than 230 N (50 lbf).

7.1.1.5 Garment outer shell fabrics and liners shall be individually tested for cleaning shrinkage resistance as specified in Section 8.10, Cleaning Shrinkage Resistance Test, and shall not shrink more than 5.0 percent in either direction.

7.1.1.6 All garment seam assemblies shall be tested for seam strength as specified in Section 8.12, Seam Breaking Strength Test, and shall demonstrate a seam strength equal to or greater than that stipulated for the respective seam type.

7.1.1.6.1 Garment seam assemblies shall demonstrate a seam strength equal to or greater than 315 N (70 lbf) force for Major A seams and 180 N (40 lbf) for Major B seams.

7.1.1.6.2 All combination woven and knit or stretch knit seam assemblies shall meet the requirements specified in 7.1.1.6.1.

7.1.1.6.3 Seam strength shall be considered acceptable where the fabric strength is less than the required seam strength specified in 7.1.1.6.1, provided the fabric fails without seam failure below the applicable forces specified in 7.1.1.6.1.

7.1.1.7* Textile fabrics, linings, collar linings, lettering, and other materials used in garment construction, including but not limited to padding, reinforcement, interfacing, binding, and hanger loops but excluding emblems, labels, and patches, shall be individually tested for flame resistance as specified in Section 8.4, Flame Resistance Test 1, and shall not have a char length of more than 100 mm (4 in.), shall not have an afterflame of more than 2.0 seconds, and shall not melt or drip.

7.1.1.7.1 Zippers shall meet the performance requirements specified in 7.1.1.7 only where located on the exterior of the garment or located where they will directly contact the wearer's body.

7.1.1.7.2 Elastic and hook and pile fasteners shall meet the performance requirements specified in 7.1.1.7 only where located where they will directly contact the wearer's body.

7.1.1.7.3 Small specimens such as hanger loops and emblems or patches that are not large enough to meet the sample size requirements in 8.4.2.1 shall be tested for resistance to flame

--`,,```,,,,````-`-`,,`,,`,`,,`---
Copyright National Fire Protection Association
Provided by IHS under license with NFPA
No reproduction or networking permitted without license from IHS
Not for Resale

as specified in 8.4.12 and shall not have an afterflame of more than 2.0 seconds and shall not melt or drip.

7.1.1.8 Textile fabrics and linings utilized in garments shall be individually tested for thermal shrinkage resistance as specified in Section 8.5, Heat and Thermal Shrinkage Resistance Test, and shall not shrink more than 10.0 percent in any direction.

7.1.1.9 Textile fabrics, linings, hardware, and other materials used in garment construction, including but not limited to padding, reinforcements, wristlets, collars, labels, hanger hooks, buttons, and fasteners but excluding hook and pile fasteners not in direct contact with the skin, shall be individually tested for heat resistance in their original form as specified in Section 8.5, Heat and Thermal Shrinkage Resistance Test, and shall not melt, drip, separate, or ignite; garment outer shells shall not char; and hardware items and closures shall remain functional.

7.1.1.9.1 Garment closures, including but not limited to zippers and hook and pile fasteners, shall meet the performance requirements specified in 7.1.1.9 only where they are located on the exterior of the garment or located where they will directly contact the wearer's body.

7.1.1.10 Sewing thread utilized in the construction of garments shall be tested for heat resistance as specified in Section 8.14, Thread Heat Resistance Test, and shall not melt.

7.1.1.11 All metal hardware and hardware that includes metal parts shall be tested for corrosion resistance as specified in Section 8.15, Corrosion Resistance Test, and shall have metals that are inherently resistant to corrosion, including but not limited to stainless steel, brass, copper, aluminum, and zinc show no more than light surface-type corrosion or oxidation; shall have ferrous metals shall no corrosion of the base metal; and shall have hardware items remain functional.

7.1.1.12 Garment composites shall be tested for thermal protective performance as specified in Section 8.2, Thermal Protective Performance Test, and shall have an average thermal protective performance (TPP) of 10 or greater.

7.1.1.13 Garment outer shell fabric shall be tested for water absorption resistance as specified in Section 8.13, Water Absorption Resistance Test, and shall have a percent water absorption of 15 percent or less.

7.1.1.14 Garment product labels shall be tested for legibility as specified in Section 8.40, Label Durability and Legibility Test, and shall not be torn, shall remain in place, and shall be legible to the unaided eye.

7.1.2 Utility Protective Ensemble Helmet Elements.

7.1.2.1 Helmets shall be tested for flame resistance as specified in Section 8.18, Flame Resistance Test 2, Procedure A, and shall not have afterflame with a duration greater than 5.0 seconds.

7.1.2.2 Any antiglare material, where used, shall be tested for flame resistance as specified in Section 8.18, Flame Resistance Test 2, Procedure B, and shall not have afterflame with a duration greater than 5.0 seconds.

7.1.2.3 Helmets shall be tested for heat resistance as specified in Section 8.5, Heat and Thermal Shrinkage Resistance Test, and shall not have any distortion of the shell extend more than 30 mm (1 3/16 in.) below the original position of the helmet, and hardware shall remain functional.

7.1.2.4 Helmets shall be tested for top impact resistance as specified by Section 8.19, Top Impact Resistance Test (Force), and shall not transmit an average force of more than 3785 N (850 lbf). No individual specimen shall transmit a force of more than 4450 N (1000 lbf).

7.1.2.5 Helmets shall be tested for physical penetration resistance as specified in Section 8.20, Physical Penetration Resistance Test, and shall exhibit no electrical or physical contact between the penetration striker and the headform.

7.1.2.6 Helmets shall be tested for electrical insulation as specified in Section 8.21, Electrical Insulation Test 1, and shall not have electrical leakage current exceeding 3 milliamperes.

7.1.2.7 Helmets shall be tested for suspension system separation as specified in Section 8.22, Suspension System Retention Test, and shall not have the minimum force required to separate any individual attachment point of the suspension assembly from the helmet shell be less than 22 N (5 lbf).

7.1.2.8 Helmets shall be tested for retention system and chin strap efficiency as specified in Section 8.23, Retention System Test, and the retention system shall not break or show any slip or stretch greater than 38 mm (1½ in.).

7.1.2.9 All metal hardware and hardware that includes metal parts shall be tested for corrosion resistance as specified in Section 8.15, Corrosion Resistance Test, and shall have metals that are inherently resistant to corrosion, including but not limited to stainless steel, brass, copper, aluminum, and zinc show no more than light surface-type corrosion or oxidation; shall have ferrous metals show no corrosion of the base metal; and shall have hardware items remain functional.

7.1.2.10 Sewing thread utilized in the construction of helmets shall be tested for heat resistance as specified in Section 8.14, Thread Heat Resistance Test, and shall not melt.

7.1.2.11 Helmet product labels shall be tested for legibility as specified in Section 8.40, Label Durability and Legibility Test, and shall not be torn, shall remain in place, and shall be legible to the unaided eye.

7.1.3 Utility Protective Ensemble Glove Elements.

7.1.3.1 Glove composites shall be tested for resistance to cut as specified in Section 8.26, Cut Resistance Test, and shall have a distance of blade travel not less than 25 mm (1 in.).

7.1.3.2 Glove composites shall be tested for puncture resistance as specified in Section 8.27, Puncture Resistance Test 1, and shall not puncture under an applied force of 45 N (10 lbf).

7.1.3.3 Glove composites shall be tested for abrasion resistance as specified in Section 8.11, Abrasion Resistance Test 2, and shall show no wear-through.

7.1.3.4 Glove composites shall be tested for hand function as specified in Section 8.28, Glove Hand Function Test, and shall not have an average percent of barehand control exceeding 200 percent.

7.1.3.5 Gloves shall be tested for grip as specified in Section 8.29, Grip Test, and shall have a weight-pulling capacity not less than 90 percent of the barehand control values.

7.1.3.6 Gloves shall be tested for ease of donning as specified in Section 8.30, Glove Donning Test, and shall not have a final donning time exceed the baseline donning time plus 20.0 seconds, shall have no detachment of the inner liner, and shall allow full insertion of all digits.

Copyright National Fire Protection Association
Provided by IHS under license with NFPA
No reproduction or networking permitted without license from IHS
Not for Resale

7.1.3.7 Glove composites shall be individually tested for flame resistance as specified in Section 8.24, Flame Resistance Test 3, and shall have an average char length of not more than 100 mm (4 in.), shall have an average afterflame of not more than 2.0 seconds, and shall not melt or drip.

7.1.3.8 Gloves shall be tested for heat resistance as specified in Section 8.5, Heat and Thermal Shrinkage Resistance Test, and shall not separate, melt, ignite, or drip.

7.1.3.9 All glove metal hardware and hardware that includes metal parts shall be tested for corrosion resistance as specified in Section 8.15, Corrosion Resistance Test, and shall have metals that are inherently resistant to corrosion, including but not limited to stainless steel, brass, copper, aluminum, and zinc show no more than light surface-type corrosion or oxidation; shall have ferrous metals show no corrosion of the base metal; and shall have hardware items remain functional.

7.1.3.10 Glove composites shall be tested for conductive heat resistance as specified in Section 8.25, Conductive Heat Resistance Test, shall not have a second-degree burn time of less than 7 seconds, and shall not have the pain time be less than 4 seconds.

7.1.3.11 Glove knit wristlet material shall be tested for material strength as specified in Section 8.41, Burst Strength Test, and shall have a burst strength of not less than 180 N (40.7 lbf).

7.1.3.12 Sewing thread utilized in the construction of gloves shall be tested for heat resistance as specified in Section 8.14, Thread Heat Resistance Test, and shall not melt.

7.1.3.13 Glove product labels shall be tested for legibility as specified in Section 8.40, Label Durability and Legibility Test, and shall not be torn, shall remain in place, and shall be legible to the unaided eye.

7.1.3.14 Glove composites shall be tested for thermal protective performance as specified in Section 8.2, Thermal Protective Performance Test, and shall have an average thermal protective performance (TPP) of 10 or greater.

7.1.4 Utility Protective Ensemble Footwear Elements.

7.1.4.1 Footwear uppers shall be tested for abrasion resistance as specified in Section 8.11, Abrasion Resistance Test 2, and shall show no wear-through.

7.1.4.2 Footwear uppers shall be tested for cut resistance as specified in Section 8.26, Cut Resistance Test, and shall have a distance of blade travel not less than 25 mm (1 in.).

7.1.4.3 Footwear uppers shall be tested for puncture resistance as specified in Section 8.27, Puncture Resistance Test 1, and shall not puncture under an applied force of 45 N (10 lbf).

7.1.4.4 Footwear shall be tested for resistance to impact as specified in Section 8.33, Impact Resistance Test, and shall demonstrate a minimum interior height clearance of 13 mm (½ in.) during exposure to impact energy of 101.7 J (75 ft-lbf).

7.1.4.5 Footwear ladder shanks shall be tested for resistance to bending as specified in Section 8.34, Ladder Shank Bend Resistance Test, and shall not deflect more than 6 mm (¼ in.).

7.1.4.6 Footwear soles and heels shall be tested for abrasion resistance as specified in Section 8.35, Abrasion Resistance Test 3, and shall not have an abrasion index of less than 65.

7.1.4.7 Footwear soles and heels shall be tested for penetration (physical) resistance as specified in Section 8.36, Puncture Resistance Test 2, and shall not have a puncture force of less than 1200 N (270 lbf).

7.1.4.8 Footwear soles shall be tested for slip resistance as specified in Section 8.37, Slip Resistance Test, and shall have a static coefficient friction of 0.75 or greater under dry conditions.

7.1.4.9 Footwear shall be tested for electrical conduction as specified in Section 8.38, Electrical Insulation Test 2, and shall not have any electrical leakage exceed 3 milliamperes.

7.1.4.10 Eyelets and stud hooks shall be tested for detachment strength as specified in Section 8.39, Eyelet and Stud Post Attachment Test, and shall have a minimum detachment strength of 300 N (66 lbf).

7.1.4.11 All metal hardware and hardware that includes metal parts shall be tested for corrosion resistance as specified in Section 8.15, Corrosion Resistance Test, and shall have metals that are inherently resistant to corrosion, including but not limited to stainless steel, brass, copper, aluminum, and zinc show no more than light surface-type corrosion or oxidation; shall have ferrous metals show no corrosion of the base metal; and shall have hardware items remain functional.

7.1.4.12 Footwear shall be individually tested for flame resistance as specified in Section 8.32, Flame Resistance Test 4, shall not have an afterflame of more than 2.0 seconds, shall not melt or drip, and shall not exhibit any burn-through.

7.1.4.13 Footwear shall be tested for heat resistance as specified in Section 8.5, Heat and Thermal Shrinkage Resistance Test, and, other than the laces, shall not have any part of the footwear melt, shall have no delamination or separation of any part of the footwear, shall have all hardware remain functional, and shall show no water penetration.

7.1.4.14 Footwear uppers shall be tested for thermal protective performance as specified in Section 8.2, Thermal Protective Performance Test, and shall not have an average thermal protective performance (TPP) of less than 10.

7.1.4.15 Footwear uppers shall be tested for conductive heat resistance as specified in Section 8.25, Conductive Heat Resistance Test, shall not have a second-degree burn time of less than 7 seconds, and shall not have the pain time be less than 4 seconds.

7.1.4.16 Footwear upper material composite, upper seams, and vamp seams shall be tested for liquid penetration resistance as specified in Section 8.16, Liquid Penetration Resistance Test, and shall show no chemical penetration.

7.1.4.17 Footwear upper material composite, upper seams, and vamp seams shall be tested for biopenetration resistance as specified in Section 8.17, Viral Penetration Resistance Test, and shall show no viral penetration.

7.1.4.18 Sewing thread utilized in the construction of footwear shall be made of an inherently flame-resistant fiber, shall be tested for heat resistance as specified in Section 8.14, Thread Heat Resistance Test, and shall not melt.

7.1.4.19 Footwear product labels shall be tested for legibility as specified in Section 8.40, Label Durability and Legibility Test, and shall not be torn, shall remain in place, and shall be legible to the unaided eye.

Copyright National Fire Protection Association
Provided by IHS under license with NFPA
No reproduction or networking permitted without license from IHS
Not for Resale

7.1.4.20 Footwear shall be tested for metatarsal protection as specified in Section 8.43, Metatarsal Protection Test, and the height of the wax form used to measure metatarsal protection shall be a minimum of 25 mm (1 in.) after exposure to impact energy of 101.7 J (75 ft-lbf).

7.1.4.21 Footwear shall be tested for resistance to compression as specified in Section 8.42, Compression Resistance Test, and shall demonstrate a minimum interior height clearance of 13 mm (½ in.) during exposure to a compressive force of 11,121 N (2500 lbf).

7.1.5 Utility Protective Ensemble Goggle Elements.

7.1.5.1 Goggle elements shall be tested for flame resistance as specified in Section 8.18, Flame Resistance Test 2, and shall not show any visible afterflame 5.0 seconds after removal of the test flame.

7.1.5.2 Goggle elements shall be tested for heat resistance as specified in Section 8.5, Heat and Thermal Shrinkage Resistance Test, and shall not melt, drip, or ignite.

7.2* Rescue and Recovery Protective Ensemble for Technical Rescue Incidents Performance Requirements.

7.2.1 Rescue and Recovery Protective Ensemble Garment Elements.

7.2.1.1 Garment composites shall be tested for total heat loss as specified in Section 8.6, Total Heat Loss Test, and shall have a total heat loss equal to or greater than 450 W/m^2.

7.2.1.2 Textile fabrics and linings used for garments shall be tested for tear resistance as specified in Section 8.7, Tear Resistance Test, and shall have a tear resistance of not less than 30 N (6.75 lbf).

7.2.1.3 Outer shell fabrics shall be tested for breaking strength as specified in Section 8.8, Breaking Strength Test, and shall have a breaking strength of not less than 400 N (90 lbf).

7.2.1.4 Garment outer shell fabrics shall be tested for abrasion resistance as specified in Section 8.9, Abrasion Resistance Test 1, and shall have an ending breaking strength of not less than 230 N (50 lbf).

7.2.1.5 Garment outer shell fabrics, liquid barrier, and liners shall be individually tested for cleaning shrinkage resistance as specified in Section 8.10, Cleaning Shrinkage Resistance Test, and shall not shrink more than 5.0 percent in either direction.

7.2.1.6 All garment seam assemblies shall be tested for seam strength as specified in Section 8.12, Seam Breaking Strength Test, and shall demonstrate a seam strength equal to or greater than that stipulated for the respective seam type.

7.2.1.6.1 Garment seam assemblies shall demonstrate a seam strength equal to or greater than 315 N (70 lbf) for Major A seams and 180 N (40 lbf) for Major B seams.

7.2.1.6.2 All combination woven and knit or stretch knit seam assemblies shall meet the requirements as specified in 7.2.1.6.1.

7.2.1.6.3 Seam strength shall be considered acceptable where the fabric strength is less than the required seam strength specified in 7.2.1.6.1, provided the fabric fails without seam failure below the applicable forces specified in 7.2.1.6.1.

7.2.1.7* Textile fabrics, linings, collar linings, lettering, and other materials used in garment construction, including but not limited to padding, reinforcement, interfacing, binding, and hanger loops but excluding emblems, labels, and patches, shall be individually tested for flame resistance as specified in Section 8.4, Flame Resistance Test 1, and shall not have a char length of more than 100 mm (4 in.), shall not have an afterflame of more than 2.0 seconds, and shall not melt or drip.

7.2.1.7.1 Zippers and seam-sealing materials shall meet the performance requirements specified in 7.2.1.7 only where located on the exterior of the garment or located where they will directly contact the wearer's body.

7.2.1.7.2 Elastic and hook and pile fasteners shall meet the performance requirements specified in 7.2.1.7 only where located where they will directly contact the wearer's body.

7.2.1.7.3 Small specimens such as hanger loops and emblems or patches that are not large enough to meet the sample size requirements in 8.4.2.1 shall be tested for resistance to flame as specified in 8.4.12 test format and shall not have an afterflame of more than 2.0 seconds, and shall not melt or drip.

7.2.1.8 Textile fabrics and linings utilized in garments shall be individually tested for thermal shrinkage resistance as specified in Section 8.5, Heat and Thermal Shrinkage Resistance Test, and shall not shrink more than 10.0 percent in any direction.

7.2.1.9 Textile fabrics, linings, hardware, and other materials used in garment construction, including but not limited to padding, reinforcements, wristlets, collars, labels, hanger hooks, buttons, and fasteners but excluding hook and pile fasteners not in direct contact with the skin, shall be individually tested for heat resistance in their original form as specified in Section 8.5, Heat and Thermal Shrinkage Resistance Test, and shall not melt, drip, separate, or ignite; garment outer shells shall not char; and hardware items and closures shall remain functional.

7.2.1.9.1 Garment closures, including but not limited to zippers and hook and pile fasteners, shall meet the performance requirements specified in 7.2.1.9 only where they are located on the exterior of the garment or located where they will directly contact the wearer's body.

7.2.1.9.2 Liquid barrier seams shall be individually tested for resistance to heat as specified in Section 8.5, Heat and Thermal Shrinkage Resistance Test, and shall not drip or ignite.

7.2.1.10 Sewing thread utilized in the construction of garments shall be tested for heat resistance as specified in Section 8.14, Thread Heat Resistance Test, and shall not melt.

7.2.1.11 All metal hardware and hardware that includes metal parts shall be tested for corrosion resistance as specified in Section 8.15, Corrosion Resistance Test, and shall have metals that are inherently resistant to corrosion, including but not limited to stainless steel, brass, copper, aluminum, and zinc show no more than light surface-type corrosion or oxidation; shall have ferrous metals show no corrosion of the base metal; and shall have hardware items remain functional.

7.2.1.12 Garment composites shall be tested for thermal protective performance as specified in Section 8.2, Thermal Protective Performance Test, and shall have an average thermal protective performance (TPP) of 10 or greater.

7.2.1.13 Garment outer shell fabrics shall be tested for water absorption resistance as specified in Section 8.13, Water Absorption Resistance Test, and shall have a percent water absorption of 15 percent or less.

Copyright National Fire Protection Association
Provided by IHS under license with NFPA
No reproduction or networking permitted without license from IHS
Not for Resale

7.2.1.14 Garment composites and seams shall be tested for liquid penetration resistance as specified in Section 8.16, Liquid Penetration Resistance Test, and shall show no liquid penetration.

7.2.1.15 Garment composites and seams shall be tested for biopenetration resistance as specified in Section 8.17, Viral Penetration Resistance Test, and shall show no viral penetration.

7.2.1.16 Garments shall be tested for liquid penetration resistance as specified in Section 8.3, Overall Liquid Integrity Test 1, and shall not allow liquid penetration.

7.2.1.17 Garment product labels shall be tested for legibility as specified in Section 8.40, Label Durability and Legibility Test, and shall not be torn, shall remain in place, and shall be legible to the unaided eye.

7.2.2 Rescue and Recovery Protective Ensemble Helmet Elements.

7.2.2.1 Helmets shall be tested for flame resistance as specified in Section 8.18, Flame Resistance Test 2, Procedure A, and shall not have afterflame with a duration greater than 5.0 seconds.

7.2.2.2 Any antiglare material, where used, shall be tested for flame resistance as specified in Section 8.18, Flame Resistance Test 2, Procedure B, and shall not have afterflame with a duration greater than 5.0 seconds.

7.2.2.3 Helmets shall be tested for heat resistance as specified in Section 8.5, Heat and Thermal Shrinkage Resistance Test, and shall not have any distortion of the shell extend more than 30 mm (1 3/16 in.) below the original position of the helmet, and shall have hardware remain functional.

7.2.2.4 Helmets shall be tested for top impact resistance as specified by Section 8.19, Top Impact Resistance Test (Force), and shall not transmit an average force of more than 3785 N (850 lbf). No individual specimen shall transmit a force of more than 4450 N (1000 lbf).

7.2.2.5 Helmets shall be tested for physical penetration resistance as specified in Section 8.20, Physical Penetration Resistance Test, and shall exhibit no electrical or physical contact between the penetration striker and the headform.

7.2.2.6 Helmets shall be tested for electrical insulation as specified in Section 8.21, Electrical Insulation Test 1, and shall not have electrical leakage current exceeding 3 milliamperes.

7.2.2.7 Helmets shall be tested for suspension system separation as specified in Section 8.22, Suspension System Retention Test, and shall not have the minimum force required to separate any individual attachment point of the suspension assembly from the helmet shell be less than 22 N (5 lbf).

7.2.2.8 Helmets shall be tested for retention system and chin strap efficiency as specified in Section 8.23, Retention System Test, and the retention system shall not break or show any slip or stretch greater than 38 mm (1½ in).

7.2.2.9 All metal hardware and hardware that includes metal parts shall be tested for corrosion resistance as specified in Section 8.15, Corrosion Resistance Test, and shall have metals that are inherently resistant to corrosion, including but not limited to stainless steel, brass, copper, aluminum, and zinc show no more than light surface-type corrosion or oxidation; shall have ferrous metals show no corrosion of the base metal; and shall have hardware items remain functional.

7.2.2.10 Sewing thread utilized in the construction of helmets shall be tested for heat resistance as specified in Section 8.14, Thread Heat Resistance Test, and shall not melt.

7.2.2.11 Helmet product labels shall be tested for legibility as specified in Section 8.40, Label Durability and Legibility Test, and shall not be torn, shall remain in place, and shall be legible to the unaided eye.

7.2.3 Rescue and Recovery Protective Ensemble Glove Elements.

7.2.3.1 Glove composites shall be tested for resistance to cut as specified in Section 8.26, Cut Resistance Test, and shall have a distance of blade travel not less than 25 mm (1 in.).

7.2.3.2 Glove composites shall be tested for puncture resistance as specified in Section 8.27, Puncture Resistance Test 1, and shall not puncture under an applied force of 45 N (10 lbf).

7.2.3.3 Glove composites shall be tested for abrasion resistance as specified in Section 8.11, Abrasion Resistance Test 2, and shall show no wear-through.

7.2.3.4 Gloves shall be tested for hand function as specified in Section 8.28, Glove Hand Function Test, and shall not have an average percent of barehand control exceeding 200 percent.

7.2.3.5 Gloves shall be tested for grip as specified in Section 8.29, Grip Test, and shall have a weight-pulling capacity not less than 90 percent of the barehand control values.

7.2.3.6 Gloves shall be tested for ease of donning as specified in Section 8.30, Glove Donning Test, and shall not have a final donning time exceed the baseline donning time plus 20.0 seconds, shall have no detachment of the inner liner, and shall allow full insertion of all digits.

7.2.3.7 Glove composites shall be individually tested for flame resistance as specified in Section 8.24, Flame Resistance Test 3, and shall have an average char length of not more than 100 mm (4 in.), shall have an average afterflame of not more than 2.0 seconds, and shall not melt or drip.

7.2.3.8 Gloves shall be tested for heat resistance as specified in Section 8.5, Heat and Thermal Shrinkage Resistance Test, and shall not separate, melt, ignite, or drip.

7.2.3.9 All glove metal hardware and hardware that includes metal parts shall be tested for corrosion resistance as specified in Section 8.15, Corrosion Resistance Test, and shall have metals that are inherently resistant to corrosion, including but not limited to stainless steel, brass, copper, aluminum, and zinc show no more than light surface-type corrosion or oxidation; shall have ferrous metals show no corrosion of the base metal; and shall have hardware remain functional.

7.2.3.10 Glove composites shall be tested for conductive heat resistance as specified in Section 8.25, Conductive Heat Resistance Test, and shall not have a second-degree burn time of less than 7 seconds, and shall not have the pain time be less than 4 seconds.

7.2.3.11 Glove materials and seams shall be tested for liquid penetration resistance as specified in Section 8.16, Liquid Penetration Resistance Test, and shall show no liquid penetration.

Copyright National Fire Protection Association
Provided by IHS under license with NFPA
No reproduction or networking permitted without license from IHS
Not for Resale

7.2.3.12 Glove materials and seams shall be tested for biopenetration resistance as specified in Section 8.17, Viral Penetration Resistance Test, and shall show no viral penetration.

7.2.3.13 Gloves shall be tested for overall watertight integrity as specified in Section 8.31, Overall Liquid Integrity Test 2, and shall show no water penetration.

7.2.3.14 Glove knit wristlet material shall be tested for material strength as specified in Section 8.41, Burst Strength Test, and shall have a burst strength of not less than 180 N (40.7 lbf).

7.2.3.15 Sewing thread utilized in the construction of gloves shall be tested for heat resistance as specified in Section 8.14, Thread Heat Resistance Test, and shall not melt.

7.2.3.16 Glove product labels shall be tested for legibility as specified in Section 8.40, Label Durability and Legibility Test, and shall not be torn, shall remain in place, and shall be legible to the unaided eye.

7.2.3.17 Glove composites shall be tested for thermal protective performance as specified in Section 8.2, Thermal Protective Performance Test, and shall have an average thermal protective performance (TPP) of 10 or greater.

7.2.4 Rescue and Recovery Protective Ensemble Footwear Elements.

7.2.4.1 Footwear uppers shall be tested for abrasion resistance as specified in Section 8.11, Abrasion Resistance Test 2, and shall show no wear-through.

7.2.4.2 Footwear uppers shall be tested for cut resistance as specified in Section 8.26, Cut Resistance Test, and shall have a distance of blade travel not less than 25 mm (1 in.).

7.2.4.3 Footwear uppers shall be tested for puncture resistance as specified in Section 8.27, Puncture Resistance Test 1, and shall not puncture under an applied force of 45 N (10 lbf).

7.2.4.4 Footwear shall be tested for resistance to impact as specified in Section 8.33, Impact Resistance Test, and shall demonstrate a minimum interior height clearance of 13 mm (½ in.) during exposure to impact energy of 101.7 J (75 ft-lbf).

7.2.4.5 Footwear ladder shanks shall be tested for resistance to bending as specified in Section 8.34, Ladder Shank Bend Resistance Test, and shall not deflect more than 6 mm (¼ in.).

7.2.4.6 Footwear soles and heels shall be tested for abrasion resistance as specified in Section 8.35, Abrasion Resistance Test 3, and shall have an abrasion index of 65 or greater.

7.2.4.7 Footwear soles and heels shall be tested for penetration (physical) resistance as specified in Section 8.36, Puncture Resistance Test 2, and shall not have a puncture force of less than 1200 N (270 lbf).

7.2.4.8 Footwear soles shall be tested for slip resistance as specified in Section 8.37, Slip Resistance Test, and shall have a static coefficient friction of 0.75 or greater under dry conditions.

7.2.4.9 Footwear shall be tested for electrical conduction as specified in Section 8.38, Electrical Insulation Test 2, and shall not have any electrical leakage exceed 3 milliamperes.

7.2.4.10 Eyelets and stud hooks shall be tested for detachment strength as specified in Section 8.39, Eyelet and Stud Post Attachment Test, and shall have a minimum detachment strength of 300 N (66 lbf).

7.2.4.11 All metal hardware and hardware that includes metal parts shall be tested for corrosion resistance as specified in Section 8.15, Corrosion Resistance Test, and shall have metals that are inherently resistant to corrosion, including but not limited to stainless steel, brass, copper, aluminum, and zinc show no more than light surface-type corrosion or oxidation; shall have ferrous metals show no corrosion of the base metal; and shall have hardware items remain functional.

7.2.4.12 Footwear shall be individually tested for flame resistance as specified in Section 8.32, Flame Resistance Test 4, shall not have an afterflame of more than 2.0 seconds, shall not melt or drip, and shall not exhibit any burn-through.

7.2.4.13 Footwear shall be tested for heat resistance as specified in Section 8.5, Heat and Thermal Shrinkage Resistance Test, and, other than the laces, shall not have any part of the footwear melt, shall have no delamination or separation of any part of the footwear, shall have all hardware remain functional, and shall show no water penetration.

7.2.4.14 Footwear uppers shall be tested for thermal protective performance as specified in Section 8.2, Thermal Protective Performance Test, and shall not have an average thermal protective performance (TPP) of less than 10.

7.2.4.15 Footwear uppers shall be tested for conductive heat resistance as specified in Section 8.25, Conductive Heat Resistance Test, shall not have a second-degree burn time of less than 7 seconds, and shall not have the pain time be less than 4 seconds.

7.2.4.16 Footwear upper material composites, upper seams, and vamp seams shall be tested for liquid penetration resistance as specified in Section 8.16, Liquid Penetration Resistance Test, and shall show no chemical penetration.

7.2.4.17 Footwear upper material composites, upper seams, and vamp seams shall be tested for biopenetration resistance as specified in Section 8.17, Viral Penetration Resistance Test, and shall show no viral penetration.

7.2.4.18 Sewing thread utilized in the construction of footwear shall be made of an inherently flame-resistant fiber, shall be tested for heat resistance as specified in Section 8.14, Thread Heat Resistance Test, and shall not melt.

7.2.4.19 Footwear product labels shall be tested for legibility as specified in Section 8.40, Label Durability and Legibility Test, and shall not be torn, shall remain in place, and shall be legible to the unaided eye.

7.2.4.20 Footwear shall be tested for metatarsal protection as specified in Section 8.43, Metatarsal Protection Test, and the height of the wax form used to measure metatarsal protection shall be a minimum of 25 mm (1 in.) after exposure to impact energy of 101.7 J (75 ft-lbf).

7.2.4.21 Footwear shall be tested for resistance to compression as specified in Section 8.42, Compression Resistance Test, and shall demonstrate a minimum interior height clearance of 13 mm (½ in.) during exposure to a compressive force of 11,121 N (2500 lbf).

7.2.5 Rescue and Recovery Protective Ensemble Goggle Elements.

7.2.5.1 Goggle elements shall be tested for flame resistance as specified in Section 8.18, Flame Resistance Test 2, and shall not show any visible afterflame 5.0 seconds after removal of the test flame.

Copyright National Fire Protection Association
Provided by IHS under license with NFPA
No reproduction or networking permitted without license from IHS
Not for Resale

7.2.5.2 Goggle elements shall be tested for heat resistance as specified in Section 8.5, Heat and Thermal Shrinkage Resistance Test, and shall not melt, drip, or ignite.

7.3* CBRN Protective Ensemble for Technical Rescue Incidents Performance Requirements.

7.3.1 CBRN Protective Ensembles.

7.3.1.1* The entire ensemble shall be tested for overall inward leakage as specified in Section 8.44, Man-In-Simulant Test, and shall have an average local physiological protective dosage factor ($PPDF_i$) value at each PAD location for the four ensembles tested of no less than 120.0 and a systemic physiological protective dosage factor ($PPDF_{sys}$) value for each tested ensemble of no less than 76.0.

7.3.1.2 The entire ensemble shall be tested as specified in Section 8.3, Overall Liquid Integrity Test 1, and shall show no liquid penetration.

7.3.1.3 Each ensemble element's CBRN barrier layer and the barrier layer seams shall be tested for permeation resistance as specified in Section 8.45, Chemical Permeation Resistance Test, and shall meet the following performance criteria:

(1) For permeation testing of the chemical warfare agent distilled mustard (HD), the average cumulative permeation in 1 hour shall not exceed 4.0 $\mu g/cm^2$.
(2) For permeation testing of the chemical warfare agent Soman (GD), the average cumulative permeation in 1 hour shall not exceed 1.25 $\mu g/cm^2$.
(3) For permeation testing of liquid and gaseous toxic industrial chemicals, the average breakthrough time shall not be less than 60 minutes.

7.3.2 CBRN Protective Ensemble Garment Elements.

7.3.2.1 Garment composites shall be tested for total heat loss as specified in Section 8.6, Total Heat Loss Test, and shall have a total heat loss equal to or greater than 250 W/m^2.

7.3.2.2 Textile fabrics and linings used for garments shall be tested for tear resistance as specified in Section 8.7, Tear Resistance Test, and shall have a tear resistance of not less than 30 N (6.75 lbf).

7.3.2.3 Outer shell fabrics shall be tested for breaking strength as specified in Section 8.8, Breaking Strength Test, and shall have a breaking strength of not less than 400 N (90 lbf).

7.3.2.4 Garment outer shell fabrics shall be tested for abrasion resistance as specified in Section 8.9, Abrasion Resistance Test 1, and shall have an ending breaking strength of not less than 230 N (50 lbf).

7.3.2.5 Garment outer shell fabrics, liquid barrier, and liners shall be individually tested for cleaning shrinkage resistance as specified in Section 8.10, Cleaning Shrinkage Resistance Test, and shall not shrink more than 5.0 percent in either direction.

7.3.2.6 All garment seam assemblies shall be tested for seam strength as specified in Section 8.12, Seam Breaking Strength Test, and shall demonstrate a seam strength equal to or greater than that stipulated for the respective seam type.

7.3.2.6.1 Garment seam assemblies shall demonstrate a seam strength equal to or greater than 315 N (70 lbf) for Major A seams and 180 N (40 lbf) for Major B seams.

7.3.2.6.2 All combination woven and knit or stretch knit seam assemblies shall meet the requirements as specified in 7.3.2.6.1.

7.3.2.6.3 Seam strength shall be considered acceptable where the fabric strength is less than the required seam strength specified in 7.3.2.6.1, provided the fabric fails without seam failure below the applicable forces specified in 7.3.2.6.1.

7.3.2.7* Textile fabrics, linings, collar linings, lettering, and other materials used in garment construction, including but not limited to padding, reinforcement, interfacing, binding, and hanger loops but excluding emblems, labels, and patches, shall be individually tested for flame resistance as specified in Section 8.4, Flame Resistance Test 1, and shall not have a char length of more than 100 mm (4 in.), shall not have an afterflame of more than 2.0 seconds, and shall not melt or drip.

7.3.2.7.1 Zippers and seam-sealing materials shall meet the performance requirements specified in 7.3.2.7 only where located on the exterior of the garment or located where they will directly contact the wearer's body.

7.3.2.7.2 Elastic and hook and pile fasteners shall meet the performance requirements specified in 7.3.2.7 only where located where they will directly contact the wearer's body.

7.3.2.7.3 Small specimens such as hanger loops and emblems or patches that are not large enough to meet the sample size requirements in 8.4.2.1 shall be tested for resistance to flame as specified in 8.4.12 and shall not have an afterflame of more than 2.0 seconds, and shall not melt or drip.

7.3.2.8 Textile fabrics and linings utilized in garments shall be individually tested for thermal shrinkage resistance as specified in Section 8.5, Heat and Thermal Shrinkage Resistance Test, and shall not shrink more than 10.0 percent in any direction.

7.3.2.9 Textile fabrics, linings, hardware, and other materials used in garment construction, including but not limited to padding, reinforcements, wristlets, collars, labels, hanger hooks, buttons, and fasteners but excluding hook and pile fasteners not in direct contact with the skin, shall be individually tested for heat resistance in their original form as specified in Section 8.5, Heat and Thermal Shrinkage Resistance Test, and shall not melt, drip, separate, or ignite; garment outer shells shall not char; and hardware items and closures shall remain functional.

7.3.2.9.1 Garment closures, including but not limited to zippers and hook and pile fasteners, shall meet the performance requirements specified in 7.3.2.9 only where they are located on the exterior of the garment or located where they will directly contact the wearer's body.

7.3.2.9.2 Liquid barrier seams shall be individually tested for resistance to heat as specified in Section 8.5, Heat and Thermal Shrinkage Resistance Test, and shall not drip or ignite.

7.3.2.10 Sewing thread utilized in the construction of garments shall be tested for heat resistance as specified in Section 8.14, Thread Heat Resistance Test, and shall not melt.

7.3.2.11 All metal hardware and hardware that includes metal parts shall be tested for corrosion resistance as specified in Section 8.15, Corrosion Resistance Test, and shall have metals that are inherently resistant to corrosion, including but not limited to stainless steel, brass, copper, aluminum, and zinc show no more than light surface-type corrosion or oxidation;

--`,,```,,,,````-`-`,,`,,`,`,,`---
Copyright National Fire Protection Association
Provided by IHS under license with NFPA
No reproduction or networking permitted without license from IHS
Not for Resale

shall have ferrous metals show no corrosion of the base metal; and shall have hardware items remain functional.

7.3.2.12 Garment composites shall be tested for thermal protective performance as specified in Section 8.2, Thermal Protective Performance Test, and shall have an average thermal protective performance (TPP) of 10 or greater.

7.3.2.13 Garment outer shell fabrics shall be tested for water absorption resistance as specified in Section 8.13, Water Absorption Resistance Test, and shall have a percent water absorption of 15 percent or less.

7.3.2.14 Garment composites and seams shall be tested for liquid penetration resistance as specified in Section 8.16, Liquid Penetration Resistance Test, and shall show no chemical penetration.

7.3.2.15 Garment composites and seams shall be tested for biopenetration resistance as specified in Section 8.17, Viral Penetration Resistance Test, and shall show no viral penetration.

7.3.2.16 Garment product labels shall be tested for legibility as specified in Section 8.40, Label Durability and Legibility Test, and shall not be torn, shall remain in place, and shall be legible to the unaided eye.

7.3.2.17 Where the garment CBRN barrier layer and the CBRN barrier layer seams are also the moisture barrier and the moisture barrier seams for the garment, the garment CBRN barrier layer and CBRN barrier layer seams shall meet all the performance requirements for the moisture barrier and the moisture barrier seams in 7.3.2.5, 7.3.2.6, 7.3.2.7, 7.3.2.8, 7.3.2.9, 7.3.2.14, and 7.3.2.15.

7.3.2.18 Where the garment CBRN barrier layer and the CBRN barrier layer seams are also the external layer of the garment, the garment CBRN outer layer and CBRN outer layer seams shall meet all the performance requirements for the barrier layer and barrier layer seams in 7.3.2.3, 7.3.2.4, 7.3.2.5, 7.3.2.6, 7.3.2.7, 7.3.2.8, and 7.3.2.9.

7.3.2.19 Where the CBRN barrier layer is configured as an external layer of the garment, the CBRN barrier layer shall be tested for bursting strength as specified in Section 8.41, Burst Strength Test, and shall have a bursting strength test of not less than 156 N (35 lbf).

7.3.2.20 Where the CBRN barrier layer is configured as an external layer of the garment, the CBRN barrier layer shall be tested for puncture propagation tear resistance as specified in Section 8.46, Puncture Propagation Tear Resistance Test, and shall have a puncture propagation tear resistance of not less than 31 N (7 lbf).

7.3.2.21 Where the CBRN barrier layer is configured as an external layer of the garment, the CBRN barrier layer shall be tested for cold weather performance as specified in Section 8.47, Cold Temperature Performance Test, and shall have a bending moment of not greater than 0.057 N/m (½ in.-lbf) at an angular deflection of 60 degrees at –25°C (–13°F).

7.3.3 CBRN Protective Ensemble Helmet Elements.

7.3.3.1 Helmets shall be tested for flame resistance as specified in Section 8.18, Flame Resistance Test 2, Procedure A, and shall not have afterflame with a duration greater than 5.0 seconds.

7.3.3.2 Any antiglare material, where used, shall be tested for flame resistance as specified in Section 8.18, Flame Resistance Test 2, Procedure B, and shall not have afterflame with a duration greater than 5.0 seconds.

7.3.3.3 Helmets shall be tested for heat resistance as specified in Section 8.5, Heat and Thermal Shrinkage Resistance Test, and shall not have any distortion of the shell extend more than 30 mm (1$\frac{3}{16}$ in.) below the original position of the helmet, and the hardware shall remain functional.

7.3.3.4 Helmets shall be tested for top impact resistance as specified by Section 8.19, Top Impact Resistance Test (Force), and shall not transmit an average force of more than 3785 N (850 lbf). No individual specimen shall transmit a force of more than 4450 N (1000 lbf).

7.3.3.5 Helmets shall be tested for physical penetration resistance as specified in Section 8.20, Physical Penetration Resistance Test, and shall exhibit no electrical or physical contact between the penetration striker and the headform.

7.3.3.6 Helmets shall be tested for electrical insulation as specified in Section 8.21, Electrical Insulation Test 1, and shall not have electrical leakage current exceeding 3 milliamperes.

7.3.3.7 Helmets shall be tested for suspension system separation as specified in Section 8.22, Suspension System Retention Test, and shall not have the minimum force required to separate any individual attachment point of the suspension assembly from the helmet shell be less than 22 N (5 lbf).

7.3.3.8 Helmets shall be tested for retention system and chin strap efficiency as specified in Section 8.23, Retention System Test, and the retention system shall not break or show any slip or stretch greater than 38 mm (1½ in.).

7.3.3.9 All metal hardware and hardware that includes metal parts shall be tested for corrosion resistance as specified in Section 8.15, Corrosion Resistance Test, and shall have metals that are inherently resistant to corrosion, including but not limited to stainless steel, brass, copper, aluminum, and zinc show no more than light surface-type corrosion or oxidation; shall have ferrous metals show no corrosion of the base metal; and shall have hardware items the remain functional.

7.3.3.10 Sewing thread utilized in the construction of helmets shall be tested for heat resistance as specified in Section 8.14, Thread Heat Resistance Test, and shall not melt.

7.3.3.11 Helmet product labels shall be tested for legibility as specified in Section 8.40, Label Durability and Legibility Test, and shall not be torn, shall remain in place, and shall be legible to the unaided eye.

7.3.3.12 Where the protective helmet element is used for CBRN terrorism agent protection, any helmet CBRN barrier layer and the barrier layer seams shall be tested for permeation resistance as specified in Section 8.45, Chemical Permeation Resistance Test, and shall meet the performance criteria in 7.3.1.3.

7.3.4 CBRN Protective Ensemble Glove Elements.

7.3.4.1 Glove composites shall be tested for resistance to cut as specified in Section 8.26, Cut Resistance Test, and shall have a distance of blade travel not less than 25 mm (1 in.).

7.3.4.2 Glove composites shall be tested for puncture resistance as specified in Section 8.27, Puncture Resistance Test 1, and shall not puncture under an applied force of 45 N (10 lbf).

Copyright National Fire Protection Association
Provided by IHS under license with NFPA
No reproduction or networking permitted without license from IHS
Not for Resale

7.3.4.3 Glove composites shall be tested for abrasion resistance as specified in Section 8.11, Abrasion Resistance Test 2, and shall show no wear-through.

7.3.4.4 Gloves shall be tested for hand function as specified in Section 8.28, Glove Hand Function Test, and shall not have an average percent of barehand control exceeding 200 percent.

7.3.4.5 Gloves shall be tested for grip as specified in Section 8.29, Grip Test, and shall have a weight-pulling capacity not less than 90 percent of the barehand control values.

7.3.4.6 Gloves shall be tested for ease of donning as specified in Section 8.30, Glove Donning Test, and shall not have a final donning time exceed the baseline donning time plus 20.0 seconds.

7.3.4.7 Glove composites shall be individually tested for flame resistance as specified in Section 8.24, Flame Resistance Test 3, and shall have an average char length of not more than 100 mm (4 in.), shall have an average afterflame of not more than 2.0 seconds, and shall not melt or drip.

7.3.4.8 Gloves shall be tested for heat resistance as specified in Section 8.5, Heat and Thermal Shrinkage Resistance Test, and shall not separate, melt, ignite, or drip.

7.3.4.9 All glove metal hardware and hardware that includes metal parts shall be tested for corrosion resistance as specified in Section 8.15, Corrosion Resistance Test, and shall have metals that are inherently resistant to corrosion, including but not limited to stainless steel, brass, copper, aluminum, and zinc show no more than light surface-type corrosion or oxidation; shall have ferrous metals show no corrosion of the base metal; and shall have hardware items remain functional.

7.3.4.10 Glove composites shall be tested for conductive heat resistance as specified in Section 8.25, Conductive Heat Resistance Test, and shall not have a second-degree burn time of less than 7 seconds, and shall not have the pain time be less than 4 seconds.

7.3.4.11 Glove materials and seams shall be tested for liquid penetration resistance as specified in Section 8.16, Liquid Penetration Resistance Test, and shall show no liquid penetration.

7.3.4.12 Glove materials and seams shall be tested for biopenetration resistance as specified in Section 8.17, Viral Penetration Resistance Test, and shall show no viral penetration.

7.3.4.13 Gloves shall be tested for overall watertight integrity as specified in Section 8.31, Overall Liquid Integrity Test 2, and shall show no water penetration.

7.3.4.14 Glove knit wristlet material shall be tested for material strength as specified in Section 8.41, Burst Strength Test, and shall have a burst strength of not less than 180 N (40.7 lbf).

7.3.4.15 Sewing thread utilized in the construction of gloves shall be tested for heat resistance as specified in Section 8.14, Thread Heat Resistance Test, and shall not melt.

7.3.4.16 Glove product labels shall be tested for legibility as specified in Section 8.40, Label Durability and Legibility Test, and shall not be torn, shall remain in place, and shall be legible to the unaided eye.

7.3.4.17 Glove composites shall be tested for thermal protective performance as specified in Section 8.2, Thermal Protective Performance Test, and shall have an average thermal protective performance (TPP) of 10 or greater.

7.3.4.18 Where the glove element's CBRN barrier layer is the most external layer of the element, the CBRN barrier layer shall be tested for cut resistance as specified in Section 8.26, Cut Resistance Test, and shall have a blade travel distance of not less than 25 mm (1 in.).

7.3.4.19 Where the glove element's CBRN barrier layer is the most external layer of the ensemble element for hand protection, the CBRN barrier layer shall be tested for puncture resistance as specified in Section 8.27, Puncture Resistance Test 1, and shall not be punctured under an average applied force of 22 N (5 lbf).

7.3.4.20 Where the glove element's CBRN barrier layer is the most external layer of the ensemble element, the CBRN barrier layer shall be tested for abrasion resistance as specified in Section 8.11, Abrasion Resistance Test 2, and shall show no wear-through.

7.3.5 CBRN Protective Ensemble Footwear Elements.

7.3.5.1 Footwear uppers shall be tested for abrasion resistance as specified in Section 8.11, Abrasion Resistance Test 2, and shall show no wear-through.

7.3.5.2 Footwear uppers shall be tested for cut resistance as specified in Section 8.26, Cut Resistance Test, and shall have a distance of blade travel not less than 25 mm (1 in.).

7.3.5.3 Footwear uppers shall be tested for puncture resistance as specified in Section 8.27, Puncture Resistance Test 1, and shall not puncture under an applied force of 45 N (10 lbf).

7.3.5.4 Footwear shall be tested for resistance to impact as specified in Section 8.33, Impact Resistance Test, and shall demonstrate a minimum interior height clearance of 13 mm (½ in.) during exposure to impact energy of 101.7 J (75 ft-lbf).

7.3.5.5 Footwear ladder shanks shall be tested for resistance to bending as specified in Section 8.34, Ladder Shank Bend Resistance Test, and shall not deflect more than 6 mm (¼ in.).

7.3.5.6 Footwear sole sand heels shall be tested for abrasion resistance as specified in Section 8.35, Abrasion Resistance Test 3, and shall not have an abrasion index of less than 65.

7.3.5.7 Footwear soles and heels shall be tested for penetration (physical) resistance as specified in Section 8.36, Puncture Resistance Test 2, and shall not have a puncture force of less than 1200 N (270 lbf).

7.3.5.8 Footwear soles shall be tested for slip resistance as specified in Section 8.37, Slip Resistance Test, and shall have a static coefficient friction of 0.75 or greater under dry conditions.

7.3.5.9 Footwear shall be tested for electrical conduction as specified in Section 8.38, Electrical Insulation Test 2, and shall not have any electrical leakage exceed 3 milliamperes.

7.3.5.10 Eyelets and stud hooks shall be tested for detachment strength as specified in Section 8.39, Eyelet and Stud Post Attachment Test, and shall have a minimum detachment strength of 300 N (66 lbf).

7.3.5.11 All metal hardware and hardware that includes metal parts shall be tested for corrosion resistance as specified in Section 8.15, Corrosion Resistance Test, and shall have metals that are inherently resistant to corrosion, including but not limited to stainless steel, brass, copper, aluminum, and zinc show no more than light surface-type corrosion or oxidation; shall have ferrous metals show no corrosion of the base metal; and shall have hardware items remain functional.

Copyright National Fire Protection Association
Provided by IHS under license with NFPA
No reproduction or networking permitted without license from IHS
Not for Resale

7.3.5.12 Footwear shall be individually tested for flame resistance as specified in Section 8.32, Flame Resistance Test 4, and shall not have an afterflame of more than 2.0 seconds, shall not melt or drip, and shall not exhibit any burn-through.

7.3.5.13 Footwear shall be tested for heat resistance as specified in Section 8.5. Heat and Thermal Shrinkage Resistance Test, and, other than the laces, shall not have any part of the footwear melt, shall have no delamination or separation of any part of the footwear; shall have all hardware remain functional; and shall show no water penetration.

7.3.5.14 Footwear uppers shall be tested for thermal protective performance as specified in Section 8.2, Thermal Protective Performance Test, and shall not have an average thermal protective performance (TPP) of less than 10.

7.3.5.15 Footwear uppers shall be tested for conductive heat resistance as specified in Section 8.25, Conductive Heat Resistance Test, and shall not have a second-degree burn time of less than 7 seconds and shall not have the pain time be less than 4 seconds.

7.3.5.16 Footwear upper material composites, upper seams, and vamp seams shall be tested for liquid penetration resistance as specified in Section 8.16, Liquid Penetration Resistance Test, and shall show no chemical penetration.

7.3.5.17 Footwear upper material composites, upper seams, and vamp seams shall be tested for biopenetration resistance as specified in Section 8.17, Viral Penetration Resistance Test, and shall show no viral penetration.

7.3.5.18 Sewing thread utilized in the construction of footwear shall be made of an inherently flame-resistant fiber, and shall be tested for heat resistance as specified in Section 8.14, Thread Heat Resistance Test, and shall not melt.

7.3.5.19 Footwear product labels shall be tested for legibility as specified in Section 8.40, Label Durability and Legibility Test, and shall not be torn, shall remain in place, and shall be legible to the unaided eye.

7.3.5.20 Footwear shall be tested for metatarsal protection as specified in Section 8.43, Metatarsal Protection Test, and the height of the wax form used to measure metatarsal protection shall be a minimum of 25 mm (1 in.) after exposure to impact energy of 101.7 J (75 ft-lbf).

7.3.5.21 Footwear shall be tested for resistance to compression as specified in Section 8.42, Compression Resistance Test, and shall demonstrate a minimum interior height clearance of 13 mm (½ in.) during exposure to a compressive force of 11,121 N (2500 lbf).

7.3.5.22 Where the footwear element's CBRN barrier layer is the most external layer of the element, the CBRN layer from the upper portion of the footwear element shall be tested for cut resistance as specified in Section 8.26, Cut Resistance Test, and shall have a blade travel distance of not less than 25 mm (1 in.).

7.3.5.23 Where the footwear element's CBRN barrier layer is the most external layer of the element, the CBRN barrier layer from the upper portion of the footwear element shall be tested for puncture resistance as specified in Section 8.27, Puncture Resistance Test 1, and shall not be punctured under an average applied force of 36 N (8 lbf).

7.3.5.24 Where the footwear element's CBRN barrier layer is the most external layer of the element, the CBRN barrier layer from the wear surface of the footwear element shall be tested for puncture resistance as specified in Section 8.27, Puncture Resistance Test 1, and shall not be punctured under an average applied force of 200 N (45 lbf).

7.3.5.25 Where the footwear element's CBRN barrier layer is the most external layer of the element, the CBRN barrier layer from the wear surface of the footwear element shall be tested for abrasion resistance as specified in Section 8.48, Abrasion Resistance Test 4, and shall not show wear-through of the film portion of the barrier layer in fewer than 3000 cycles.

7.3.6 CBRN Protective Ensemble Hood Interface Elements. Where a protective hood interface element is used for CBRN terrorism agent protection, the materials used in the construction of the hood shall meet the criteria for garments specified in 7.3.2.

Chapter 8 Test Methods

8.1 Sample Preparation Procedures.

8.1.1 Application.

8.1.1.1 The sample preparation procedures contained in this section shall apply to each test method in this chapter, as specifically referenced in the sample preparation section of each test method.

8.1.1.2 Only the specific sample preparation procedure or procedures referenced in the sample preparation section of each test method shall be applied to that test method.

8.1.2 Room Temperature Conditioning Procedure for Garments, Helmets, Gloves, Footwear, and Goggles. Specimens shall be conditioned at a temperature of 21°C, ±3°C (70°F, ±5°F) and a relative humidity of 65 percent, ±5 percent for at least 24 hours. Specimens shall be tested within 5 minutes after removal from conditioning.

8.1.3 Washing and Drying Procedure for Garment Materials. Specimens shall be subjected to 10 cycles of washing and drying in accordance with the procedure specified in Machine Cycle 1, Wash Temperature V, and Drying Procedure Ai, of AATCC 135, *Dimensional Changes in Automatic Home Laundering of Woven and Knit Fabrics*. A 1.8 kg, ±0.1 kg (4.0 lb, ±0.2 lb) load shall be used. A laundry bag shall not be used.

8.1.4 Low Temperature Environmental Conditioning Procedure for Helmets.

8.1.4.1 Sample helmets shall be conditioned by exposing them to a temperature of −18°C, +1°C (0°F, +2°F) for at least 4 hours but not more than 24 hours. The impact/penetration test shall be completed within 15 seconds ±5 seconds after removal from the cold temperature environment, or the helmet shall be reconditioned and tested.

8.1.4.2 If during testing, as specified in Section 8.19, Top Impact Resistance Test (Force), and Section 8.20, Physical Penetration Resistance Test, a helmet is returned to the conditioning environment before the time out of that environment exceeds 4 minutes, the helmet shall be kept in the environment for a minimum of 3 minutes before resumption of testing with that helmet.

8.1.4.3 If the time out of the environment exceeds 4 minutes, the helmet shall be returned to the environment for a minimum of 3 minutes for each minute or portion of a minute that the helmet remained out of the environment in excess of

--`,,```,,,,````-`-`,,`,,`,`,,`---

Copyright National Fire Protection Association
Provided by IHS under license with NFPA
No reproduction or networking permitted without license from IHS
Not for Resale

4 minutes or for a maximum of 12 hours, whichever is less, before the resumption of testing with that helmet.

8.1.5 Wet Conditioning Procedure for Helmets. Sample helmets shall be conditioned by immersing them in water at a temperature of 20°C to 28°C (68°F to 82°F) for at least 4 hours but not more than 24 hours. The helmet shall be allowed to drain and tested within 10 minutes after removal from water. If during testing, as specified in Section 8.19, Top Impact Resistance Test (Force) and Section 8.20, Physical Penetration Resistance Test, a helmet is returned to the conditioning environment before the time out of that environment exceeds 4 minutes, the helmet shall be kept in the environment for a minimum of 3 minutes before resumption of testing with that helmet. If the time out of the environment exceeds 4 minutes, the helmet shall be returned to the environment for a minimum of 3 minutes for each minute or portion of a minute that the helmet remained out of the environment in excess of 4 minutes or for a maximum of 12 hours, whichever is less, before the resumption of testing with that helmet.

8.1.6 Radiant and Convective Heat Environmental Conditioning Procedure for Helmets.

8.1.6.1 Sample helmets shall be conditioned by exposing the area to be impacted/penetrated to a radiant heat source. The top, sides, front, and back test areas to be impacted/penetrated shall be as specified in Figure 8.1.6.1.

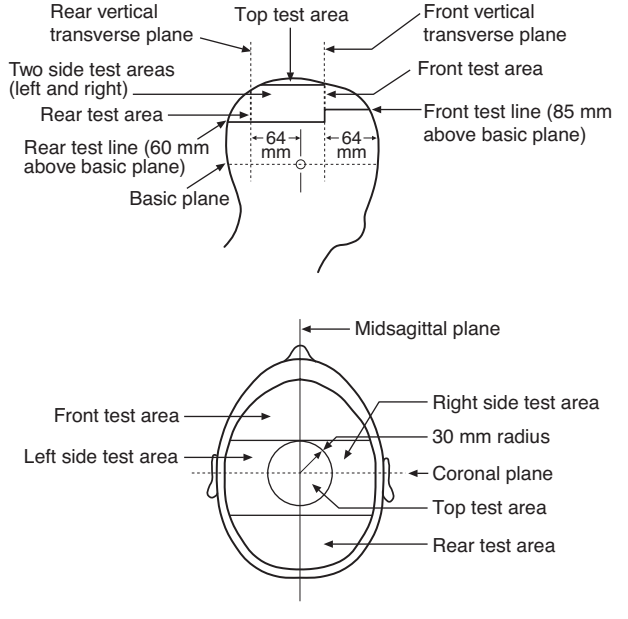

FIGURE 8.1.6.1 Helmet Test Areas and Landmarks.

8.1.6.2 The area to be impacted/penetrated shall be exposed to an irradiance of 1.0 W/cm^2, ±0.1 W/cm^2 for a length of time determined by exposure of a radiant heat transducer. The heat source shall be removed, and the helmet shall be tested. The helmet shall be impacted/penetrated in 15 seconds, ±5 seconds after removal from the conditioning environment, or the helmet shall be cooled to room temperature and reconditioned and tested as above.

8.1.6.3 The radiometer shall have a spectral response that is flat within ±3 percent over a range of at least 1.0 mm to 10.1 mm (1/25 in. to 2/5 in.) and an overall accuracy of at least ±5 percent of the reading.

8.1.6.4 The radiant panel shall have an effective radiating surface of at least 150 mm, ±5 mm (6 in., ±¼ in.) square. The spectral radiant emittance curve of the radiant panel shall be that of a blackbody at a temperature of 1000K, ±200K (1340°F, ±360°F).

8.1.6.5 The radiant heat transducer specified in Figure 8.1.6.5 shall be constructed from sheet copper, ASTM B 152, *Specification for Copper Sheet, Strip, Plate, and Rolled Bar,* Type 110 ETP, half hard, 0.64 mm, ±0.05 mm (0.025 in., ±0.002 in.) thick and 50 mm, ±0.4 mm (2. in., ±0.02 in.) square. A constantan wire 0.81 mm, ±0.04 mm (0.032 in., ±0.002 in.) in diameter and an iron wire of the same diameter shall be silver-soldered near the edges of the copper sheet on the same side, as illustrated in Figure 8.1.6.5. The side of the copper sheet opposite that with the wires attached shall be painted flat black. The resulting transducer is a Type J thermocouple, which shall be used in conjunction with appropriate instrumentation to monitor the heat exposure to which the helmet is to be subjected.

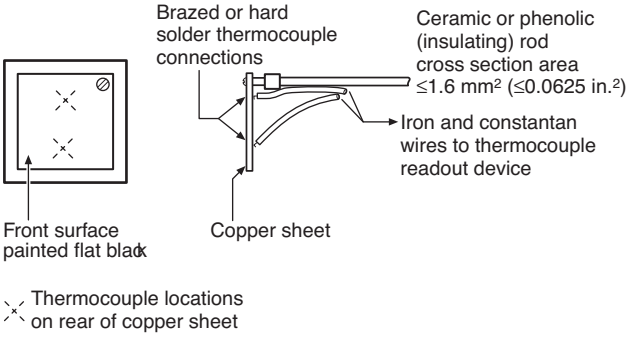

FIGURE 8.1.6.5 Radiant Heat Transducer.

8.1.6.6 Sample helmets shall be mounted in the position to be conditioned. The point of impact or penetration on the helmet shell shall be determined in accordance with the specific test to be performed. The helmet shall be temporarily removed, and a radiometer shall be located at that point perpendicular to and facing away from the helmet surface.

8.1.6.7* The radiant panel shall be introduced in front of the radiometer with its effective radiating surface parallel to the plane tangent to the helmet surface at the center of the impact/penetration site on the helmet. The radiant panel shall be adjusted to obtain a stable uniform irradiance of 1.0 W/cm^2, ±0.1 W/cm^2 over at least a 75 mm (3 in.) diameter circle located on the plane and centered at the center of impact or penetration. Stability shall be achieved when the irradiance changes by less than 10 percent during a 3-minute period.

8.1.6.8 The radiometer shall be replaced with the radiant heat transducer. The center of the transducer shall be positioned with its center coincident with the center of the impact/penetration site on the helmet and parallel to the plane tangent to the helmet surface at that point. The flat black surface of the transducer shall face the radiant panel. The time required for the transducer to reach a temperature of 177°C (350°F) shall be recorded. That time shall be 1 minute +5/−0 seconds. A closed insulated chamber shall be required to achieve this exposure time.

Copyright National Fire Protection Association
Provided by IHS under license with NFPA
No reproduction or networking permitted without license from IHS
Not for Resale

8.1.6.9 The chamber and helmet shall be stabilized at 25°C, ±5°C (77°F, ±9°F). The helmet shall be positioned in the chamber in the same position as in 8.1.6.6. The helmet shall be subjected to the exposure conditions specified in 8.1.6.1 for the time recorded in 8.1.6.8. The exposure time shall be not less than the time recorded in 8.1.6.8 nor more than 5 seconds longer than that time.

8.1.7 Wet Conditioning Procedure for Gloves. Specimens shall be conditioned by complete immersion in water at a temperature of 21°C, ±3°C (70°F, ±5°F) for 2 minutes. Specimens shall be removed from water, hung in a vertical position for 5 minutes, laid horizontal with AATCC textile blotting paper both under and over the specimen, under a pressure of 3.5 kPa, ±0.35 kPa (0.50 psi, ±0.05 psi) for a period of 20 minutes. Blotting paper shall be in accordance with paragraph 5.4 of AATCC 70, *Water Repellency: Tumble Jar Dynamic Absorption Test.*

8.1.8 Convective Heat Conditioning for Labels, Visibility Markings, and CBRN Barrier Layers. Samples shall be conditioned by exposing them to the procedures specified in 8.5.4 and in 8.5.5.2 through 8.5.5.4, with the following modifications:

(1) The oven temperature shall be stabilized at 140°C, +6°C/−0°C (285°F, +10°/0°F), and the test exposure time shall be 10 minutes, +15/−0 seconds.
(2) The test exposure time shall begin when the test thermocouple reading has stabilized at the required test exposure temperature.
(3) The requirements of 8.5.5.5 and 8.5.5.6 shall be disregarded.
(4) The required post–oven exposure testing shall be performed within 4 hours.

8.1.9 Washing and Drying Procedure for Whole Garments and CBRN Materials.

8.1.9.1 The complete garment shall be washed with all closures fastened.

8.1.9.2 A front-loading washer/extractor shall be used.

8.1.9.3 Two-thirds the rated capacity of the washer shall not be exceeded.

8.1.9.4 The wash cycle procedure in Table 8.1.9.4 shall be followed.

8.1.9.5 The garment shall be dried using a tumble dryer with a dry stack temperature of 38°C to 49°C (100°F to 120°F).

8.1.9.6 The garment shall be tumbled for 60 minutes and shall be removed immediately at the end of the drying cycle. At the conclusion of the final drying cycle, the garment shall be allowed to air dry for at least 48 hours prior to conducting the test.

8.1.9.7 Garments shall be washed and dried for a total of 10 washing and 10 drying cycles.

8.1.9.8 Gloves and hoods that are part of CBRN protective ensembles shall be washed and dried for a total of 10 washing and 10 drying cycles.

8.1.9.9 CBRN materials shall be washed and dried for a total of 10 washing and 10 drying cycles.

8.1.9.10 The CBRN material samples shall be tumbled for 20 minutes and shall be removed immediately at the end of the drying cycle.

Table 8.1.9.4 Wash Cycle Procedure for Whole Garments and CBRN Materials

Operation	Time (minutes)	Temperature °C, ±3°C	Temperature °F, ±5°F	Water Level
Suds using AATCC detergent % 1993, 1.0 g/4 L (1 gal) water	10	49	120	Low
Drain	1			
Carryover	5	49	120	Low
Drain	1			
Rinse	2	38	100	High
Drain	1			
Rinse	2	38	100	High
Drain	1			
Rinse	2	38	100	High
Drain	1			
Extract	5			

8.1.10 Washing and Drying Procedure for Gloves. Specimens shall be subjected to 10 cycles of washing and drying in accordance with the procedure specified in Machine Cycle 1, Wash Temperature V, and Drying Procedure Ai, of AATCC 135, *Dimensional Changes in Automatic Home Laundering of Woven and Knit Fabrics.*

8.1.10.1 A 1.8 kg, ±0.1 kg (4.0 lb, ±0.2 lb) load shall be used.

8.1.10.2 A laundry bag shall not be used.

8.1.11 Flexural Fatigue Procedure for CBRN Barrier Layer.

8.1.11.1 Specimens shall be subjected to flexural fatigue in accordance with ASTM F 392, *Standard Test Method for Flex Durability of Flexible Barrier Materials*, with the following modifications.

8.1.11.2 Specimens shall be flexed at 21°C, +/−3°C and a relative humidity of 65 percent, +/−5 percent.

8.1.11.3 In lieu of Flexing Conditions A, B, C, D, or E, test specimens shall have a flex period of 3000 cycles at 45 cycles per minute.

8.1.11.4 The mandrels shall be spaced at a distance of 235 mm (9¼ in.) in the starting position and 83 mm (3¼ in.) in the closed position. A cycle shall be full flex and twisting action.

8.1.12 Abrasion Procedure for CBRN Barrier Layer. Specimens shall be abraded in accordance with ASTM D 4157, *Standard Test Method for Abrasion Resistance of Textile Fabrics (Oscillatory Cylinder Method)*, under the following conditions:

(1) A 2.3 kg (5 lb) tension weight shall be used.
(2) A 1.6 kg (3.5 lb) head weight shall be used.
(3) The abradants shall be each of the material layers in the composite that are adjacent to the CBRN barrier layer.
(4) The specimen shall be abraded for a total of 60,000 cycles.
(5) The specimen shall be abraded for half of the cycles against the outer layer of the composite with the specimen facing the outer layer in its normal "as worn" orientation.
(6) The specimen shall then be abraded for the remaining cycles against the inner layer of the composite with the specimen facing the inner layer in its normal "as worn" orientation.

Copyright National Fire Protection Association
Provided by IHS under license with NFPA
No reproduction or networking permitted without license from IHS
Not for Resale

8.2 Thermal Protective Performance Test.

8.2.1 Application.

8.2.1.1 This test method shall apply to protective garment materials, glove materials, and footwear upper materials.

8.2.1.2 Modifications to this test method for testing garment materials shall be as specified in 8.2.8.

8.2.1.3 Modifications to this test method for testing glove materials shall be as specified in 8.2.9.

8.2.1.4 Modifications to this test method for testing footwear upper materials shall be as specified in 8.2.10.

8.2.2 Sample Preparation.

8.2.2.1 Samples shall be as specified in 8.2.8, 8.2.9, or 8.2.10.

8.2.2.2 Samples shall be conditioned as specified in 8.1.3 followed by conditioning as specified in 8.1.2.

8.2.2.3 Other samples shall also be conditioned as specified in 8.1.2.

8.2.3 Specimens.

8.2.3.1 Specimens shall be as specified in 8.2.8, 8.2.9, or 8.2.10.

8.2.3.2 Three specimens for each conditioning specified in 8.2.8, 8.2.9, and 8.2.10 shall be tested.

8.2.4 Apparatus. The test apparatus specified in ISO 17492, *Clothing for protection against heat and flame — Determination of heat transmission on exposure to both flame and radiant heat* shall be used.

8.2.5 Procedure. Thermal protective performance testing shall be performed in accordance with ISO 17492, *Clothing for protection against heat and flame — Determination of heat transmission on exposure to both flame and radiant heat*, shall be used with the following modifications:

(1) An exposure heat flux of 84 kW/m^2 (2.0 cal/cm^2/s) shall be used.
(2) The space configuration shall be used for testing of all material specimens.
(3) The thermal threshold index analysis method shall be used with calculations made using the heat flux in calories per square centimeter per second and reported as the TPP rating.
(4) T-150 quartz tubes shall be used.

8.2.6 Report.

8.2.6.1 The individual test TPP rating of each specimen shall be reported.

8.2.6.2 The average TPP rating shall be calculated, recorded, and reported.

8.2.6.3 Where a TPP rating is greater than 60, the TPP rating shall be reported as ">60."

8.2.7 Interpretation.

8.2.7.1 Pass or fail determinations shall be separately based on the average reported TPP rating of all specimens.

8.2.7.2 Where an individual result from any test set varies more than ±10 percent from the average result, the results from the test set shall be discarded and another set of specimens shall be tested.

8.2.8 Specific Requirements for Testing Garment Composites.

8.2.8.1 Specimens shall consist of all layers used in the construction of the garment, excluding any areas with special reinforcements. Specimens shall not include seams. Specimens shall not be stitched to hold individual layers together.

8.2.8.2 Samples for conditioning shall be at least 1 m (1 yd) square of each material.

8.2.8.3 Testing shall be performed as described in 8.2.2 through 8.2.7.

8.2.8.4 Specimens shall be tested both before and after preconditioning as specified in 8.1.2 and then conditioned as specified in 8.1.3.

8.2.9 Specific Requirements for Testing Glove Body Composites.

8.2.9.1 Samples for conditioning shall be glove composite pouches constructed as specified in 8.2.9.3.

8.2.9.2 Specimens shall be representative of each glove body composite construction.

8.2.9.3 Specimens of glove body composites for conditioning shall be in the form of a 200 mm × 200 mm (8 in. × 8 in.) pouch.

8.2.9.3.1 The glove composite pouch shall be made of two glove body composite swatches. Each of the two glove body composite swatches shall be 200 mm × 200 mm (8 in. × 8 in.) and shall be constructed using the actual glove layers arranged in proper order.

8.2.9.3.2 Each of the two glove body composite swatches shall be stitched on all four sides using the same thread as used in the glove construction.

8.2.9.3.3 The two glove body composite swatches shall then be sewn together, inner liner to inner liner, on three sides, using the same thread as used in the glove construction, to form the glove composite pouch.

8.2.9.4 Specimens shall be tested both before and after preconditioning as specified in 8.1.2 and then conditioned as specified in 8.1.10.

8.2.9.5 After conditioning, the glove composite pouch and stitching shall be cut to form specimens measuring 175 mm × 175 mm (7 in. × 7 in.) for testing.

8.2.9.5.1 Specimens shall not include seams where multiple layers are involved.

8.2.9.5.2 Specimens shall not be stitched to hold individual layers together during testing.

8.2.9.6 Testing shall be performed as specified in 8.2.2 through 8.2.7.

8.2.10 Specific Requirements for Testing Footwear Upper Materials.

8.2.10.1 Specimens shall consist of the footwear upper used in the actual footwear construction, with the layers arranged in proper order. Specimens shall not include seams where multiple layers are involved. Specimens shall not be stitched to hold individual layers together.

8.2.10.2 Samples for conditioning shall include footwear upper material that is a minimum of 150 mm × 150 mm, ±6 mm (6 in. × 6 in., ±¼ in.), consisting of the material used in the

Copyright National Fire Protection Association
Provided by IHS under license with NFPA
No reproduction or networking permitted without license from IHS
Not for Resale

actual footwear construction, with the layers arranged in proper order.

8.2.10.3 Testing shall be performed as described in 8.2.2 through 8.2.7.

8.2.10.4 Footwear upper specimens shall be conditioned as specified in 8.1.2 only.

8.3 Overall Liquid Integrity Test 1.

8.3.1 Application. This test method shall apply to complete garments.

8.3.1.1 This test method shall apply to protective garments, protective coats with interface device to integrate gloves, protective trousers with integrated booties, and entire ensembles that are being evaluated for optional CBRN terrorism agent protection.

8.3.1.2 Modifications to this test method for testing protective coats and protective coats with an interface device to integrate gloves shall be as specified in 8.3.8.

8.3.1.3 Modifications to this test method for testing protective trousers and protective trousers with integrated booties shall be as specified in 8.3.9.

8.3.1.4 Modifications to this test method for testing protective coat and trouser sets or protective coveralls shall be as specified in 8.3.10.

8.3.1.5 Modifications to this test method for testing entire ensembles for CBRN terrorism agent protection shall be as specified in 8.3.11.

8.3.2 Sample Preparation.

8.3.2.1 Samples shall be complete garments or ensemble elements, with all layers assembled that are required for the garment to be compliant.

8.3.2.2 Samples shall be preconditioned as specified in 8.1.9 followed by 8.1.2.

8.3.3 Specimens.

8.3.3.1 A minimum of three specimens shall be tested. Specimens shall consist of individual coats, trousers, coveralls, sets of coats and trousers, or entire ensembles for CBRN terrorism agent protection. Each element shall have in place all layers that are required for the element to be compliant.

8.3.3.2 The size of the elements that the specimens comprise shall be chosen to conform with the dimensions of the mannequin for proper fit of the specimen on the mannequin in accordance with the manufacturer's sizing system. The size of the elements that the specimen comprises shall be the same size as the mannequin in terms of chest circumference, waist circumference, and inseam height.

8.3.4 Apparatus. The apparatus and supplies for testing shall be those specified in ASTM F 1359, *Standard Test Method for Liquid Penetration Resistance of Protective Clothing or Protective Ensembles Under a Shower Spray While on a Mannequin,* using the following modifications:

(1) The surface tension of the water used in testing shall be 35 dynes/cm, ±5 dynes/cm.
(2) The mannequin used in testing shall have straight arms and legs, with the arms positioned at the mannequin's side.

8.3.5 Procedure. Liquidtight integrity testing of garments shall be conducted in accordance with ASTM F 1359, *Standard Test Method for Liquid Penetration Resistance of Protective Clothing or Protective Ensembles Under a Shower Spray While on a Mannequin,* with the following modifications:

(1) No provisions for partial garments shall be permitted.
(2) Blocking of the specimen shall be as specified in 8.3.8, 8.3.9, and 8.3.10, as appropriate, for the type of specimen being tested.
(3) The method used for mounting of the mannequin in the spray chamber shall not interfere with the water spray.
(4) The normal outer surface of the material shall be exposed to the liquid as oriented in the clothing item.
(5) Fluorescent or visible dyes shall not be used in the water for spraying the suited mannequin.
(6) The suited mannequin shall be exposed to the liquid spray for 5 minutes in each of the four specified mannequin orientations, for a total of 20 minutes.
(7) At the end of the liquid spray exposure period, excess liquid shall be removed from the surface of the specimen.
(8) The specimen shall be inspected within 10 minutes of the end of the liquid spray exposure period for evidence of liquid penetration.

8.3.6 Report. A diagram shall be prepared for each test that identifies the locations of any liquid leakage as detected on the liquid-absorptive garment and the interior of the garment.

8.3.7 Interpretation. Any evidence of liquid inside the specimen or on the liquid-absorptive garment, as determined by visual, tactile, or absorbent toweling, shall constitute failure of the specimen.

8.3.8 Specific Requirements for Testing Coats.

8.3.8.1 The liquid-absorptive garment shall cover only the upper torso and arms of the mannequin from the middle of the mannequin's neck, down to the mannequin's waistline, and down to the mannequin's wrist crease.

8.3.8.2 The coat shall be donned on the mannequin in accordance with the manufacturer's instructions for proper wearing.

8.3.8.3 The coat collar shall be placed in the up position on the mannequin with the collar closure system fastened in the closed position. The head of the mannequin shall be sealed off with a plastic bag. The plastic bag shall extend downward over the collar a distance of not greater than 25 mm (1 in.) and shall be taped down with duct tape or similar waterproof tape. The tape shall not extend downward more than 25 mm (1 in.) from the top of the collar. The bottom edge of the tape and the plastic bag shall not come closer than 25 mm (1 in.) to the collar seam, where a collar seam is present. Where present, the collar neck seam shall not be covered.

8.3.8.4 The test shall be conducted with the mannequin's hands removed. The coat sleeve hem shall be taped smoothly to a can or an object of similar cylindrical, rigid shape of the same nominal diameter as the sleeve opening. The can or cylinder shall be fitted under the coat outer shell sleeve hem. The tape shall be duct tape or similar waterproof tape.

8.3.8.4.1 Where the coats have an interface device to integrate gloves as permitted in 6.3.4.4, the mannequin hands shall not be removed.

8.3.8.4.2 The interface device shall be mounted with gloves in accordance with the manufacturer's instructions for proper wearing.

Copyright National Fire Protection Association
Provided by IHS under license with NFPA
No reproduction or networking permitted without license from IHS
Not for Resale

8.3.8.5 The coat shall be tested in conjunction with the protective trousers specified by the manufacturer, even where the trousers are not being specifically evaluated by this test.

8.3.8.6 Testing shall be performed as specified in 8.3.3 through 8.3.6.

8.3.9 Specific Requirements for Testing Trousers.

8.3.9.1 The liquid-absorptive garment shall only cover the lower torso and legs of the mannequin from the mannequin's waistline down to the mannequin's ankles.

8.3.9.2 The trousers shall be donned on the mannequin in accordance with the manufacturer's instructions for proper wearing.

8.3.9.3 Trousers shall be tested in conjunction with the protective coat specified by the manufacturer, even where the coat is not being specifically evaluated by this test.

8.3.9.4 Absorbent toweling or similar material shall be placed underneath the mannequin to prevent water splashing up inside the trouser leg.

8.3.9.5 Where trousers are provided with integrated booties, outer footwear specified to be worn with the booties shall be donned on the mannequin in accordance with the manufacturer's instructions for proper wearing.

8.3.9.6 Testing shall be performed as specified in 8.3.3 through 8.3.6.

8.3.10 Specific Requirements for Testing Coveralls and for Testing Sets of Coats and Trousers.

8.3.10.1 The liquid-absorptive garment shall cover only the torso, arms, and legs of the mannequin from the middle of the mannequin's neck, down to the mannequin's wrist crease, and down to the mannequin's ankles.

8.3.10.2 The coverall or set of coat and trousers shall be donned on the mannequin in accordance with the manufacturer's instructions for proper wearing.

8.3.10.3 The coat or coverall collar shall be placed in the up position on the mannequin with the collar closure system fastened in the closed position. The head of the mannequin shall be sealed off with a plastic bag. The plastic bag shall extend downward over the collar a distance of not greater than 25 mm (1 in.) and shall be taped down with duct tape or similar waterproof tape. The tape shall not extend downward more than 25 mm (1 in.) from the top of the collar. The collar neck seam shall not be covered. The bottom edge of the tape and the plastic bag shall not come closer than 25 mm (1 in.) to the collar seam, where a collar seam is present. Where present, the collar neck seam shall not be covered.

8.3.10.4 The test shall be conducted with the mannequin's hands removed. The coat or coverall sleeve hem shall be taped smoothly to a can or an object of similar cylindrical, rigid shape of the same nominal diameter as the sleeve opening. The can or cylindrical object shall be fitted under the coat or coverall outer shell sleeve hem. The tape shall be duct tape or similar waterproof tape.

8.3.10.4.1 Where the coats or coveralls have an interface device to integrate gloves as permitted in 6.3.4.4, the mannequin hands shall not be removed.

8.3.10.4.2 The interface device shall be mounted with gloves in accordance with the manufacturer's instructions for proper wearing.

8.3.10.5 Absorbent toweling or similar material shall be placed underneath the mannequin to prevent water splashing up inside the trouser leg.

8.3.10.6 Where trousers are provided with integrated booties, outer footwear specified to be worn with the booties shall be donned on the mannequin in accordance with the manufacturer's instructions for proper wearing.

8.3.10.7 Testing shall be performed as specified in 8.3.3 through 8.3.6.

8.3.11 Specific Requirements for Testing Ensembles for CBRN Terrorism Agent Protection.

8.3.11.1 Specimens for testing shall consist of CBRN protective ensembles and the garment, helmet, glove, and footwear elements, and the CBRN SCBA, CBRN PAPR, or CBRN APR specified for the ensemble by the ensemble manufacturer. The hood interface component shall also be tested where the hood is not part of the CBRN ensemble garment elements.

8.3.11.2 A total of three different ensemble specimens shall be evaluated.

8.3.11.3 Garment, glove, and hood elements shall be conditioned as specified in 8.1.9.

8.3.11.4 Where the ensemble garment element does not include booties and the CBRN barrier layer is incorporated into footwear, footwear shall be conditioned by flexing for 100,000 cycles in accordance with Appendix B of FIA 1209, *Whole Shoe Flex*.

8.3.11.5 The liquid absorptive garment shall be a hooded coverall made of fabric meeting the requirements in ASTM F1359, *Standard Test Method for Liquid Penetration Resistance of Protective Clothing or Protective Ensembles Under a Shower Spray While on a Mannequin*. The liquid absorptive garment shall not interfere with the correct wearing of the ensemble. In addition to the liquid absorptive garment, the mannequin's hands shall be covered with suitably sized 100 percent cotton gloves and the mannequin's feet covered with suitably sized 100 percent cotton socks.

8.3.11.6 Specimens provided in 8.3.11.1 shall be donned on the mannequin in accordance with manufacturer specifications.

8.3.11.7 No taping, blockage, coverage, or provision of absorbent toweling of or to any part of any interface or element on the ensemble shall be permitted.

8.3.11.8 The mannequin with ensemble in place shall be exposed to the liquid spray for a total of 20 minutes, 5 minutes in each of the four mannequin orientations.

8.3.11.9 Following the test, the liquid absorptive garment, inner cotton gloves, and inner cotton socks on the mannequin shall be inspected to determine evidence of liquid leakage.

8.3.11.10 Other than the exposure duration specified in 8.3.11.8, testing shall be performed as specified in 8.3.3 through 8.3.6.

8.4 Flame Resistance Test 1.

8.4.1 Application.

8.4.1.1 This test method shall apply to protective garment textiles and visibility markings.

8.4.1.2 Modifications to this test method for testing woven textile materials shall be as specified in 8.4.8.

Copyright National Fire Protection Association
Provided by IHS under license with NFPA
No reproduction or networking permitted without license from IHS
Not for Resale

8.4.1.3 Modifications to this test method for testing knit textile materials shall be as specified in 8.4.9.

8.4.1.4 Modifications to this test method for testing nonwoven textile materials shall be as specified in 8.4.10.

8.4.1.5 Modifications to this test method for testing small specimens not meeting the specimen size requirements of 8.4.2.1 shall be as specified in 8.4.12.

8.4.2 Samples.

8.4.2.1 Samples shall consist of a 75 mm × 305 mm (3 in. × 12 in.) rectangle with the long dimension parallel to either the warp direction, machine or course, or the filling direction, cross machine or wales, of the material.

8.4.2.2 Each individual layer of multilayer material systems or composites shall be separately tested.

8.4.3 Specimen Preparation.

8.4.3.1 Specimens shall be tested both before and after being subjected to the procedure specified in 8.1.3.

8.4.3.2 All specimens to be tested shall be conditioned as specified in 8.1.2.

8.4.4 Apparatus. The test apparatus specified in ASTM D 6413, *Standard Test Method for Flame Resistance of Textiles (Vertical Test),* shall be used.

8.4.5 Procedure.

8.4.5.1 Flame resistance testing shall be performed in accordance with Method ASTM D 6413, *Standard Test Method for Flame Resistance of Textiles (Vertical Test).*

8.4.5.2 Each specimen shall be examined for evidence of melting or dripping.

8.4.6 Report.

8.4.6.1 Afterflame time and char length shall be reported for each specimen.

8.4.6.2 The average afterflame time and char length for each material shall be calculated, recorded, and reported.

8.4.6.3 The afterflame time shall be reported to the nearest 0.1 second and the char length to the nearest 3 mm (⅛ in.).

8.4.6.4 Observations of melting or dripping for each specimen shall be reported.

8.4.7 Interpretation.

8.4.7.1 Pass or fail performance shall be based on any observed melting or dripping, the average afterflame time, and the average char length.

8.4.7.2 Failure in either direction shall constitute failure of the material.

8.4.8 Specific Requirements for Testing Woven Textile Materials.

8.4.8.1 Five specimens from each of the warp and filling directions shall be tested.

8.4.8.2 Samples for conditioning shall be at least 1 m (1 yd) square of each material.

8.4.8.3 Testing shall be performed as described in 8.4.2 through 8.4.7.

8.4.9 Specific Requirements for Testing Knit Textile Materials.

8.4.9.1 Five specimens from each of the two directions shall be tested.

8.4.9.2 Samples for conditioning shall include material that is a minimum of 75 mm × 305 mm (3 in. × 12 in.).

8.4.9.3 Testing shall be performed as described in 8.4.2 through 8.4.7.

8.4.10 Specific Requirements for Testing Nonwoven Textile Materials.

8.4.10.1 Five specimens from each of the machine and cross machine directions shall be tested.

8.4.10.2 Samples for conditioning shall be at least 1 m (1 yd) square of each material.

8.4.10.3 Testing shall be performed as described in 8.4.2 through 8.4.7.

8.4.11 Specific Requirements for Testing Small Materials.

8.4.11.1 Five specimens attached to the textile layer as used in the protective garments shall be tested. The specimens shall be attached to the textile layer such that the bottom (exposure) edge of the item coincides with the bottom (exposure) edge of the textile support layer.

8.4.11.2 Samples for conditioning shall be 1 m (1 yd) square of the textile layer on which the small specimens are attached.

8.4.11.3 Testing shall be performed as described in 8.4.2 through 8.4.7, other than char length shall not be measured.

8.5 Heat and Thermal Shrinkage Resistance Test.

8.5.1 Application.

8.5.1.1 This test method shall apply to protective garment textiles, liquid barrier seams, and hardware; labels; protective helmets; protective gloves; protective footwear; and goggles.

8.5.1.2 Modifications to this test method for testing garment textiles and liquid barrier seams shall be as specified in 8.5.8.

8.5.1.3 Modifications to this test method for other garments and label materials shall be as specified in 8.5.9.

8.5.1.4 Modifications to this test method for testing hardware shall be as specified in 8.5.10.

8.5.1.5 Modifications to this test method for testing helmets shall be as specified in 8.5.11.

8.5.1.6 Modifications to this test method for testing gloves shall be as specified in 8.5.12.

8.5.1.7 Modifications to this test method for testing footwear shall be as specified in 8.5.13.

8.5.1.8 Modifications to this test method for testing goggles shall be as specified in 8.5.14.

Copyright National Fire Protection Association
Provided by IHS under license with NFPA
No reproduction or networking permitted without license from IHS
Not for Resale

8.5.2 Sample Preparation.

8.5.2.1 Samples shall be as specified in 8.5.8, 8.5.9, 8.5.10, 8.5.11, 8.5.12, 8.5.13, or 8.5.14.

8.5.2.2 Samples shall be conditioned as specified in 8.1.3 followed by conditioning as specified in 8.1.2.

8.5.2.3 Other samples shall be conditioned as specified in 8.1.2 only.

8.5.3 Specimens.

8.5.3.1 Specimens shall be as specified in 8.5.8, 8.5.9, 8.5.10, 8.5.11, 8.5.12, 8.5.13, or 8.5.14.

8.5.3.2 Heat resistance testing shall be conducted on a minimum of three specimens for each hardware item, label material, helmet, footwear, goggle, and other protective garment materials not listed in 8.5.3.3.

8.5.3.3 Both heat and thermal shrinkage resistance testing shall be conducted on a minimum of three specimens for each garment textile and on whole gloves.

8.5.3.4 Each separable layer of multilayer material systems or composites shall be tested as an individual layer.

8.5.3.5 Testing shall be conducted on specimens taken from samples conditioned according to both 8.5.2.2 and 8.5.2.3, except as modified by 8.5.8, 8.5.9, 8.5.10, 8.5.11, 8.5.12, 8.5.13, and 8.5.14.

8.5.4 Apparatus.

8.5.4.1 The test oven shall be a horizontal-flow circulating oven with minimum interior dimensions of 610 mm × 610 mm × 610 mm (24 in. × 24 in. × 24 in.) such that a specimen can be suspended and be at least 50 mm (2 in.) from any interior oven surface or other specimen.

8.5.4.2 The test oven shall have an airflow rate of 38 m/min to 76 m/min (125 ft/min to 250 ft/min) at the standard temperature and pressure of 21°C (70°F) at 1 atmosphere, measured at the center point of the oven.

8.5.4.3 A test thermocouple shall be positioned so that it is level with the horizontal centerline of a mounted sample specimen. The thermocouple shall be equidistant between the vertical centerline of a mounted specimen placed in the middle of the oven and the oven wall where the airflow enters the test chamber. The thermocouple shall be an exposed bead, Type J or Type K, No. 30 AWG thermocouple. The test oven shall be heated and the test thermocouple stabilized at 260°C, +6/−0°C (500°F, +10/−0°F) for a period of not less than 30 minutes.

8.5.5 Procedure.

8.5.5.1 Specimen marking and measurements shall be conducted in accordance with the procedure specified in AATCC 135, *Dimensional Changes in Automatic Home Laundering of Woven and Knit Fabrics*.

8.5.5.2 The specimen shall be suspended by metal hooks at the top and centered in the oven so that the entire specimen is not less than 50 mm (2 in.) from any oven surface or other specimen, and airflow is parallel to the plane of the material.

8.5.5.3 The oven door shall not remain open more than 15 seconds. The air circulation shall be shut off while the door is open and turned on when the door is closed. The total oven recovery time after the door is closed shall not exceed 30 seconds.

8.5.5.4 The specimen, mounted as specified, shall be exposed in the test oven for 5 minutes, +0.15/−0 minutes. The test exposure time shall begin when the test thermocouple recovers to a temperature of 260°C, +6/−0°C (500°F, +10/−0°F).

8.5.5.5 Immediately after the specified exposure, the specimen shall be removed and examined for evidence of ignition, melting, dripping, or separation.

8.5.5.6 After the specified exposure, the specimen shall also be measured to determine pass or fail performance. Knit fabric shall be pulled to original dimensions and shall be allowed to relax for 1 minute prior to measurement to determine pass or fail performance.

8.5.6 Report.

8.5.6.1 Observations of ignition, melting, dripping, or separation shall be recorded and reported for each specimen.

8.5.6.2 The percent change in the width and length dimensions of each specimen shall be calculated.

8.5.6.3 Results shall be reported as the average of all three specimens in each direction.

8.5.7 Interpretation.

8.5.7.1 Any evidence of ignition, melting, dripping, or separation on any specimen shall constitute failing performance.

8.5.7.2 The average percent change in both dimensions shall be used to determine pass or fail performance.

8.5.7.3 Failure in any one direction shall constitute failure for the entire sample.

8.5.8 Specific Requirements for Testing Garment Textiles.

8.5.8.1 Each specimen shall be 380 mm × 380 mm, ±13 mm (15 in. × 15 in., ±½ in.) and shall be cut from the fabric to be utilized in the construction of the clothing item.

8.5.8.2 Samples for conditioning shall be at least 1 m (1 yd) square of each material.

8.5.8.3 Testing shall be performed as described in 8.5.2 through 8.5.7.

8.5.9 Specific Requirements for Testing Other Garment and Label Materials.

8.5.9.1 Specimen length shall be 150 mm (6 in.), except for textiles utilized in the clothing item in lengths less than 150 mm (6 in.), where length shall be the same as utilized in the clothing item. Specimen width shall be 150 mm (6 in.), except for textiles utilized in the clothing item in widths less than 150 mm (6 in.), where widths shall be the same as utilized in the clothing item.

8.5.9.2 Samples for conditioning shall include material sewn onto a 1 yd square ballast material no closer than 50 mm (2 in.) apart in parallel strips. The ballast material shall be as specified in AATCC 135, *Dimensional Changes in Automatic Home Laundering of Woven and Knit Fabrics*. Specimens shall be removed from the ballast material prior to testing.

--`,,```,,,,````-`-`,,`,,`,`,,`---

Copyright National Fire Protection Association
Provided by IHS under license with NFPA
No reproduction or networking permitted without license from IHS
Not for Resale

8.5.9.3 Testing shall be performed as described in 8.5.2 through 8.5.7. Thermal shrinkage shall not be measured.

8.5.10 Specific Requirements for Testing Hardware.

8.5.10.1 Only the conditioning specified in 8.1.2 shall be required prior to testing.

8.5.10.2 A minimum of three complete hardware items shall be tested.

8.5.10.3 Other than as specified in 8.5.6.1 and 8.5.6.2, testing shall be performed as described in 8.5.2 through 8.5.7. Thermal shrinkage shall not be measured.

8.5.10.4 Observations of hardware items and closure condition following heat exposure shall be limited to ignition.

8.5.10.5 Hardware items and closures shall be evaluated for functionality within 10 minutes following removal from the oven.

8.5.11 Specific Testing Requirements for Helmets.

8.5.11.1 Helmet specimens shall include complete helmets. Only one helmet shall be tested at a time.

8.5.11.2 Only the conditioning specified in 8.1.2 shall be required prior to testing.

8.5.11.3 The test oven shall be heated and stabilized to a temperature of 177°C, +5°C/–0°C (350°F, +10°/–0°F).

8.5.11.4 Sample helmets shall be mounted in accordance with the helmet-positioning index on the thermal headform conforming to the dimensions in Figure 8.5.11.4.

8.5.11.5 A series of points shall be marked 75 mm (3 in.) apart on the outer edge of the peak or brim of the sample helmets, allowing at least three points on a peak and eight or more points on a full brim. The vertical distance from a known horizontal base plane to the marked points on the peak or brim shall be measured and recorded.

8.5.11.6 The sample helmet mounted on the headform shall be placed in the center of the oven with the centerline of the front of the helmet facing the airflow. The thermocouple shall be equidistant between the vertical centerline of a mounted test helmet placed in the middle of the oven and the oven wall where the airflow enters the test chamber.

8.5.11.7 Testing shall be performed as described in 8.5.2 through 8.5.7. Thermal shrinkage shall not be measured.

8.5.11.8 After 5 minutes, +15/–0 seconds, the sample helmet mounted on the headform shall be removed from the test oven. The helmet shall be allowed to cool for a minimum of 2 minutes. The vertical distance from the marked points to the base plane shall be measured, recorded, and compared with the measurements recorded in 8.5.11.5 to determine pass or fail performance.

8.5.11.9 Hardware shall be evaluated to determine functionality.

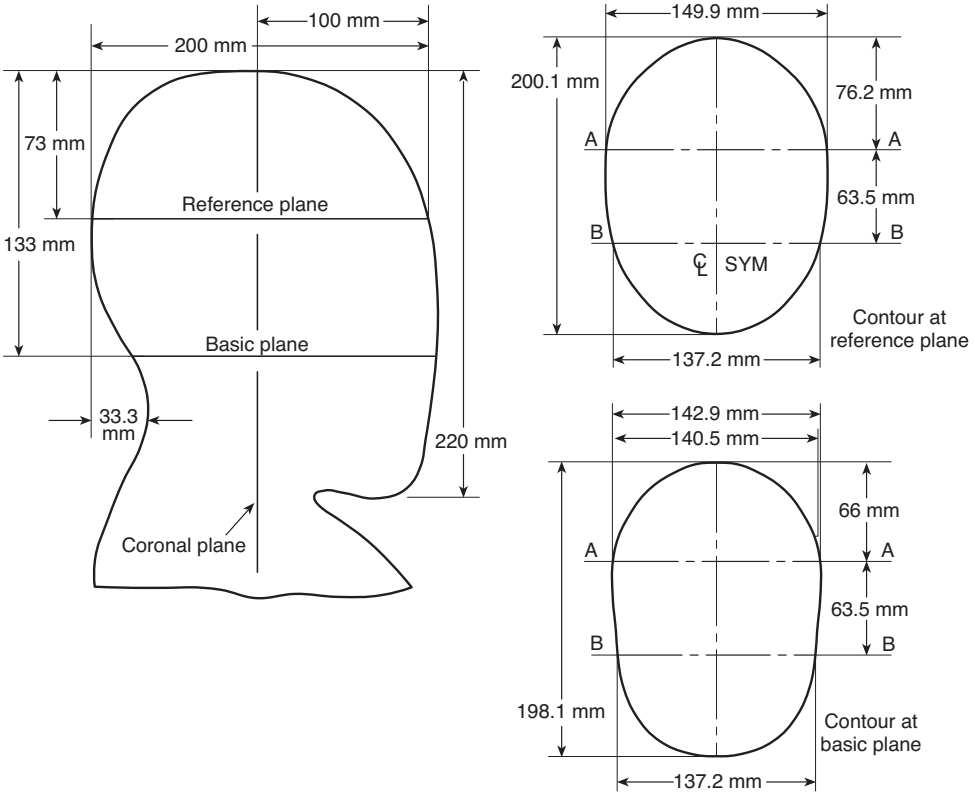

FIGURE 8.5.11.4 Thermal Headform.

Copyright National Fire Protection Association
Provided by IHS under license with NFPA
No reproduction or networking permitted without license from IHS
Not for Resale

8.5.12 Specific Requirements for Testing Gloves.

8.5.12.1 Specimens shall include complete gloves with labels. Only three glove specimens shall be tested at a time.

8.5.12.2 The glove body shall be filled with 4 mm perforated soda-lime glass beads, with care taken to tightly pack the glass beads into the fingers of the glove and the glove body. The opening of the glove shall be clamped closed, and the specimen shall be suspended by the clamp in the oven so that the entire glove is not less than 50 mm (2 in.) from any oven surface or other specimen and airflow is parallel to the plane of the material.

8.5.12.3 Testing shall be performed as described in 8.5.2 through 8.5.7. Thermal shrinkage shall not be measured.

8.5.13 Specific Testing Requirements for Footwear.

8.5.13.1 Only the conditioning specified in 8.1.2 shall be required prior to testing. One footwear specimen shall be tested at a time.

8.5.13.2 Samples for conditioning shall be whole boots.

8.5.13.3 The footwear specimen for testing shall be size 9.

8.5.13.4 A minimum of three specimens shall be tested. One footwear specimen shall be tested at a time.

8.5.13.5 Footwear specimens shall be filled to capacity with nominal 4 mm perforated soda-lime glass beads or borosilicate glass beads. Any closures shall be fastened.

8.5.13.6 The test thermocouple shall be positioned so that it is level with the horizontal centerline of a footwear test specimen. The thermocouple shall be equidistant between the vertical centerline of a footwear test specimen placed in the middle of the oven and the oven wall where the airflow enters the test chamber.

8.5.13.7 The specimen shall be placed in the center of the test oven with the centerline of the front of the specimen facing the airflow.

8.5.13.8 Testing shall be performed as specified in 8.5.2 through 8.5.7. Thermal shrinkage shall not be measured.

8.5.13.9 Following removal from the oven, the specimen shall be allowed to cool at room temperature for not less than 5 minutes, +15/−0 seconds. The test specimen shall be examined inside and outside for evidence of melting, separation, or ignition, within 10 minutes, +15/−0 seconds after removal from the oven.

8.5.13.10 Each test specimen shall then be reconditioned as specified in 8.1.2 and then reexamined inside and outside for evidence of melting, separation, or ignition.

8.5.13.11 Footwear functionality shall be determined by flexing the specimen for 100,000 cycles performed in accordance with Appendix B of FIA 1209, *Whole Shoe Flex*, with the exception that water shall not be used.

8.5.13.12 Specimens shall then be examined for evidence of sole separation, seam separation, or component breakage.

8.5.13.13 After flexing, the footwear specimen shall be placed in a container that allows the entire footwear to be immersed in tap water.

8.5.13.13.1 The container shall be filled with tap water to a height within 25 mm (1 in.) of the footwear height as determined in 6.4.4.

8.5.13.13.2 The tap water shall be treated with a dye and surfactant that achieves a surface tension of 35 dynes/cm, ±5 dynes/cm.

8.5.13.13.3 Plain white paper toweling shall be placed inside the footwear specimen such that the paper toweling intimately contacts all areas inside the footwear specimen to a height within 25 mm (1 in.) of the footwear height as determined in 6.1.4.4, 6.2.4.4, and 6.3.5.1.

8.5.13.13.4 After 2 hours, ±10 minutes, the paper toweling shall be removed and examined for evidence of liquid leakage.

8.5.13.14 The appearance of any liquid on the removed paper toweling shall be recorded and reported as a failure for the tested specimen. One or more footwear specimens failing this test shall constitute failing performance.

8.5.14 Specific Testing Requirements for Goggles.

8.5.14.1 Only the conditioning specified in 8.1.2 shall be required prior to testing.

8.5.14.2 Where provided, goggle specimens shall include straps or headbands and attachment devices.

8.5.14.3 Goggles shall be mounted on a thermal headform conforming to the dimensions in Figure 8.5.11.4. The headform with goggles attached shall be placed in the center of the test oven with the centerline of the front of the goggles facing the air flow.

8.5.14.4 The test thermocouple shall be positioned so that it is level with the horizontal centerline of the mounted goggles. The thermocouple shall be equidistant between the vertical centerline of the mounted test goggles placed in the middle of the oven and the oven wall where the airflow enters the test chamber.

8.5.14.5 Testing shall be performed as described in 8.5.2 through 8.5.7. Thermal shrinkage shall not be measured.

8.5.14.6 Following removal from the oven, the specimen shall be allowed to cool at room temperature for not less than 2 minutes. The specimen shall be examined to ascertain any effects of the heat exposure.

8.6 Total Heat Loss Test.

8.6.1 Application. This test method shall apply to the protective garment base composites.

8.6.2 Sample Preparation.

8.6.2.1 Samples for conditioning shall be at least a 1 m (1 yd) square of each material.

8.6.2.2 Samples to be tested shall be conditioned as specified at a temperature of 25°C, ±7°C (75°F, ±12°F) and a relative humidity of 65 percent, ±5 percent for at least 5 hours.

8.6.3 Specimens.

8.6.3.1 Specimen size shall be the size required to cover the sweating guarded hot plate.

8.6.3.2 At least three specimens shall be tested.

8.6.3.3 Specimens shall consist of all layers in the protective garment base composite arranged in the order and orientation as worn and shall not include any reinforcement materials.

--`,,```,,,,````-`-`,,`,,`,`,,`---

Copyright National Fire Protection Association
Provided by IHS under license with NFPA
No reproduction or networking permitted without license from IHS
Not for Resale

8.6.4 Apparatus. The test apparatus shall be as specified in ASTM F 1868, *Standard Test Method for Thermal and Evaporative Resistance of Clothing Materials using a Sweating Hot Plate.*

8.6.5 Procedure. Testing shall be conducted in accordance with ASTM F 1868, *Standard Test Method for Thermal and Evaporative Resistance of Clothing Materials using a Sweating Hot Plate,* Part C.

8.6.6 Report.

8.6.6.1 The average intrinsic thermal resistance (R_{cf}) of the sample shall be recorded and reported.

8.6.6.2 The average apparent intrinsic evaporative resistance (AR_{ef}) of the sample shall be recorded and reported.

8.6.6.3 The average total heat loss (Q_t) of the sample shall be calculated and reported.

8.6.7 Interpretation.

8.6.7.1 Pass or fail determination shall be based on the average reported total heat loss measurement of all specimens tested.

8.6.7.2 Where an individual result from any test set varies more than +/−10 percent from the average result, the results from the test set shall be discarded and another set of specimens shall be tested.

8.7 Tear Resistance Test.

8.7.1 Application. This test shall apply to garment materials. If the garment is constructed of several separable layers, then all layers shall be individually tested.

8.7.2 Sample Preparation.

8.7.2.1 Samples for conditioning shall be at least 1 m (1 yd) square of material.

8.7.2.2 Samples shall be conditioned as specified in 8.1.3 followed by the conditioning as specified in 8.1.2.

8.7.2.3 Other specimens shall be conditioned as specified in 8.1.2 only.

8.7.3 Specimens.

8.7.3.1 Specimens shall be the size specified in ASTM D 5587, *Standard Test Method for Tearing Strength of Fabrics by Trapezoid Procedure.*

8.7.3.2 A minimum of five specimens in each of the warp direction, machine or course, and the filling direction, cross machine or wales, shall be tested.

8.7.3.3 If the material is isotropic, then 10 specimens shall be tested.

8.7.3.4 Testing shall be conducted on 10 specimens taken from both samples conditioned according to 8.7.2.2 and 8.7.2.3.

8.7.4 Procedure. Specimens shall be tested in accordance with ASTM D 5587, *Standard Test Method for Tearing Strength of Fabrics by Trapezoid Procedure,* using Option 1 for the calculation of tear resistance.

8.7.5 Report.

8.7.5.1 The tear resistance of each specimen shall be recorded and reported to the nearest 0.2 N (0.1 lbf).

8.7.5.2 An average tear resistance shall be individually calculated for the warp and filling directions.

8.7.5.3 For isotropic materials, a single average tear resistance shall be calculated.

8.7.6 Interpretation.

8.7.6.1 Pass or fail performance shall be based on the average tear resistance in the warp and filling directions.

8.7.6.2 Failure in any one direction constitutes failure for the material.

8.8 Breaking Strength Test.

8.8.1 Application. This test shall apply to garment outer shell materials.

8.8.2 Sample Preparation.

8.8.2.1 Samples for conditioning shall be at least 1 m (1 yd) square of material.

8.8.2.2 Samples shall be conditioned as specified in 8.1.3 followed by conditioning as specified in 8.1.2.

8.8.2.3 Other specimens shall be conditioned as specified in 8.1.2 only.

8.8.3 Specimens.

8.8.3.1 Specimens shall be the size specified in ASTM D 5034, *Standard Test Method for Breaking Force and Elongation of Textile Fabrics (Grab Method).*

8.8.3.2 A minimum of five specimens in each of the warp direction, machine or course, and the filling direction, cross machine or wales, shall be tested.

8.8.3.3 If the material is isotropic, then 10 specimens shall be tested.

8.8.3.4 Testing shall be conducted on 10 specimens taken from both samples conditioned according to 8.8.2.2 and 8.8.2.3.

8.8.4 Procedure. Specimens shall be tested in accordance with ASTM D 5034, *Standard Test Method for Breaking Force and Elongation of Textile Fabrics (Grab Method).*

8.8.5 Report.

8.8.5.1 The breaking strength of each specimen shall be recorded and reported to the nearest 0.2 N (0.1 lbf) of force.

8.8.5.2 An average breaking strength shall be individually calculated and reported for the warp and filling directions.

8.8.5.3 For isotropic materials, a single average breaking strength shall be calculated.

8.8.6 Interpretation.

8.8.6.1 Pass or fail performance shall be based on the average breaking strength in the warp and filling directions.

8.8.6.2 Failure in any one direction constitutes failure for the material.

8.9 Abrasion Resistance Test 1.

8.9.1 Application. This test shall apply to garment outer shell materials.

8.9.2 Sample Preparation.

8.9.2.1 Samples for conditioning shall be at least 1 m (1 yd) square of material.

8.9.2.2 Samples shall be conditioned as specified in 8.1.3 followed by conditioning as specified in 8.1.2.

Copyright National Fire Protection Association
Provided by IHS under license with NFPA
No reproduction or networking permitted without license from IHS
Not for Resale

8.9.3 Specimens.

8.9.3.1 Specimens shall be the size specified in ASTM D 3885, *Standard Test Method for Abrasion Resistance of Textile Fabrics (Flexing and Abrasion Method).*

8.9.3.2 A minimum of five specimens in each of the warp direction, machine or course, and the filling direction, cross machine or wales, shall be tested.

8.9.3.3 If the material is isotropic, then 10 specimens shall be tested.

8.9.4 Procedure.

8.9.4.1 Specimens shall be subjected to abrasion in accordance with ASTM D 3885, *Standard Test Method for Abrasion Resistance of Textile Fabrics (Flexing and Abrasion Method),* under the following conditions:

(1) A 0.23 kg (0.5 lb) head weight shall be used.
(2) A 1.35 kg (3.0 lb) back weight shall be used.
(3) The specimen shall be abraded for 500 continuous cycles.

8.9.4.2 After being abraded as specified in 8.9.4.1, specimens shall be tested in accordance with ASTM D 5035, *Standard Test Method for Breaking Force and Elongation of Textile Fabrics (Strip Method).*

8.9.5 Report.

8.9.5.1 The breaking strength of each specimen shall be recorded and reported to the nearest 0.2 N (0.1 lbf).

8.9.5.2 An average breaking strength after abrasion shall be individually calculated and reported for the warp and filling directions.

8.9.5.3 For isotropic materials, a single average breaking strength after abrasion shall be calculated.

8.9.6 Interpretation.

8.9.6.1 Pass or fail performance shall be based on the average breaking strength after abrasion in the warp and filling directions.

8.9.6.2 Failure in any one direction constitutes failure for the material.

8.10 Cleaning Shrinkage Resistance Test.

8.10.1 Application.

8.10.1.1 This test method shall apply to garment materials.

8.10.1.2 Modifications to this test method for woven material shall be as specified in 8.10.7.

8.10.1.3 Modifications to this test method for knit and stretch woven materials shall be as specified in 8.10.8.

8.10.2 Sample Preparation.

8.10.2.1 Samples shall be as specified in 8.10.7 or 8.10.8.

8.10.2.2 Samples shall be conditioned as specified in 8.1.2.

8.10.3 Specimens.

8.10.3.1 Samples shall be as specified in 8.10.7 or 8.10.8.

8.10.3.2 At least three specimens shall be tested.

8.10.3.3 Each material shall be tested separately.

8.10.4 Procedure.

8.10.4.1 Specimens shall be tested using five cycles of Machine Cycle 1, Wash Temperature V, and Drying Procedure Ai, of AATCC 135, *Dimensional Changes in Automatic Home Laundering of Woven and Knit Fabrics.*

8.10.4.2 A 1.8 kg, ±0.1 kg (4.0 lb, ±0.2 lb) load shall be used. A laundry bag shall not be used.

8.10.4.3 Specimen marking and measurements shall be conducted in accordance with the procedure specified in AATCC 135, *Dimensional Changes in Automatic Home Laundering of Woven and Knit Fabrics.*

8.10.5 Report.

8.10.5.1 The percent change in the width and length dimensions of each specimen shall be calculated and reported.

8.10.5.2 Results shall be reported as the average of all three specimens in each direction.

8.10.6 Interpretation.

8.10.6.1 The average percent change in both dimensions shall be used to determine pass or fail performance.

8.10.6.2 Failure in any one direction constitutes failure for the entire sample.

8.10.7 Specific Requirements for Testing Woven Textile Materials.

8.10.7.1 Each specimen shall be 380 mm × 380 mm, ±13 mm (15 in. × 15 in., ±½ in.) and shall be cut from the fabric to be utilized in the construction of the clothing item.

8.10.7.2 Samples for conditioning shall be at least 1 m (1 yd) square of each material.

8.10.7.3 Testing shall be performed as described in 8.10.2 through 8.10.6.

8.10.8 Specific Requirements for Testing Knit and Stretch Woven Textile Materials.

8.10.8.1 Each specimen shall be 380 mm × 380 mm, ±13 mm (15 in. × 15 in., ±½ in.) and shall be cut from the fabric to be utilized in the construction of the clothing item.

8.10.8.2 Samples for conditioning shall include material that is at least 50 mm (2 in.) larger than necessary for the dimensional change measurement in each of the two required specimen dimensions.

8.10.8.3 Testing shall be performed as described in 8.10.2 through 8.10.6.

8.10.8.4 Knit fabric specimens, instead of being restored to 7.4.2 of AATCC 135, *Dimensional Changes in Automatic Home Laundering of Woven and Knit Fabrics*, shall be pulled to their original dimensions and shall be allowed to relax for 1 minute prior to measurement.

8.11 Abrasion Resistance Test 2.

8.11.1 Application.

8.11.1.1 This test shall apply to glove palm composites and footwear upper materials.

8.11.1.2 Modifications to this test method for testing glove composite shall be as specified in 8.11.7.

Copyright National Fire Protection Association
Provided by IHS under license with NFPA
No reproduction or networking permitted without license from IHS
Not for Resale

8.11.1.3 Modifications to this test method for testing footwear upper materials shall be as specified in 8.11.8.

8.11.2 Sample Preparation.

8.11.2.1 Samples shall be as specified in 8.11.7 or 8.11.8.

8.11.2.2 Samples shall be conditioned as specified in 8.1.2.

8.11.3 Specimens.

8.11.3.1 Samples shall be as specified in 8.11.7 or 8.11.8.

8.11.3.2 Specimens shall be the size specified in ASTM D 3884, *Standard Test Method for Abrasion Resistance of Textile Fabrics (Rotary Platform, Double-Head Method).*

8.11.3.3 At least five specimens shall be tested.

8.11.4 Procedure. Specimens shall be tested in accordance with ASTM D 3884, *Standard Test Method for Abrasion Resistance of Textile Fabrics (Rotary Platform, Double-Head Method),* using a Calibrade H-18 wheel for a total of 2500 cycles. At the end of each abrasion exposure, the specimen shall be examined for wear-through of the outermost separable layer.

8.11.5 Report. The wear-through determination shall be reported for each specimen tested.

8.11.6 Interpretation. Any specimen of the outermost separable layer showing wear-through shall constitute failure of this test.

8.11.7 Requirements for Testing Glove Composites.

8.11.7.1 Specimens shall be taken from the palm area of the gloves and shall not include seams. Samples and specimens shall be permitted to be materials representative of those used in the construction of the glove.

8.11.7.2 Samples for conditioning shall be full gloves.

8.11.7.3 A load of 500 g on each wheel shall be used in abrasion testing of gloves.

8.11.8 Requirements for Testing Footwear Upper Materials.

8.11.8.1 Specimens shall be taken from the footwear upper area and shall not include seams. Samples and specimens shall be permitted to be materials representative of those used in the construction of the footwear.

8.11.8.2 Samples for conditioning shall be complete footwear items.

8.11.8.3 A load of 1000 g on each wheel shall be used in abrasion testing of footwear.

8.12 Seam Breaking Strength Test.

8.12.1 Application. This test method shall apply to seam assemblies for garments.

8.12.2 Sample Preparation.

8.12.2.1 Samples for conditioning shall be full clothing items or 305 mm (12 in.) or greater lengths of seam with at least 150 mm (6 in.) of material on either side of the seam centerline.

8.12.2.2 Samples shall be conditioned as specified in 8.1.2.

8.12.3 Specimens.

8.12.3.1 Specimens shall be cut from the finished garment or shall be permitted to be prepared by the joining of two pieces of the garment fabric as specified in 8.2.1.2 of ASTM D 1683, *Standard Test Method for Failure in Sewn Seams of Woven Fabrics,* for woven fabrics or 7.2.2 of ASTM D 3940, *Standard Test Method for Bursting Strength (Load) and Elongation of Sewn Seams of Knit or Woven Stretch Textile Fabrics,* for knit or stretch woven fabrics, using the same thread, seam type, and stitch type as used in the finished garment.

8.12.3.2 Specimens shall be the size specified in ASTM D 1683, *Standard Test Method for Failure in Sewn Seams of Woven Fabrics,* for woven fabrics or ASTM D 3940, *Standard Test Method for Bursting Strength (Load) and Elongation of Sewn Seams of Knit or Woven Stretch Textile Fabrics,* for knit or stretch woven fabrics.

8.12.3.3 At least five seam specimens shall be tested for each seam type.

8.12.4 Procedure.

8.12.4.1 All woven seam assemblies shall be tested in accordance with ASTM D 1683, *Standard Test Method for Failure in Sewn Seams of Woven Fabrics.* The test machine shall be operated at a rate of 305 mm/min (12 in./min).

8.12.4.2 All knit seam assemblies shall be tested in accordance with ASTM D 3940, *Standard Test Method for Bursting Strength (Load) and Elongation of Sewn Seams of Knit or Woven Stretch Textile Fabrics.*

8.12.5 Report.

8.12.5.1 The seam breaking strength for each seam specimen shall be recorded and reported.

8.12.5.2 The average seam breaking strength for each seam type shall also be reported.

8.12.5.3 The type of seams tested shall be reported as to whether the specimens were cut from the finished garment or prepared from fabric samples.

8.12.6 Interpretation. The average seam breaking strength for each seam type shall be used to determine pass or fail performance.

8.13 Water Absorption Resistance Test.

8.13.1 Application. This test method shall apply to the protective garment outer shell and collar lining materials.

8.13.2 Sample Preparation.

8.13.2.1 Samples for conditioning shall be at least 1 m (1 yd) square of each material.

8.13.2.2 Specimens shall be conditioned as specified in 8.1.3 followed by conditioning as specified in 8.1.2.

8.13.3 Specimens.

8.13.3.1 Specimens shall be 200 mm × 200 mm (8 in. × 8 in.).

8.13.3.2 At least 3 specimens shall be tested.

8.13.4 Apparatus. The test apparatus shall be as specified in AATCC 42, *Water Resistance: Impact Penetration Test,* with the following modifications:

(1) A metal roller 113 mm, ±6 mm (4½ in., ±¼ in.) long and weighing 1 kg (2¼ lb) shall be used.
(2) Embroidery hoops, measuring 150 mm to 180 mm (6 in. to 7 in.) in diameter shall be used for mounting the specimen.

Copyright National Fire Protection Association
Provided by IHS under license with NFPA
No reproduction or networking permitted without license from IHS
Not for Resale

8.13.5 Procedure.

8.13.5.1 The conditioned specimen shall be securely mounted in the embroidery hoops with sufficient tension to ensure a uniformly smooth surface.

8.13.5.2 The direction of the flow of water down the specimen shall coincide with the warpwise direction of the specimen as placed on the stand.

8.13.5.3 The mounted specimen shall be placed on the block with the center of the specimen directly beneath the center of the nozzle and the plane of the surface of the specimen at a 45-degree angle with the horizontal.

8.13.5.4 A 500 mL volume of distilled water at a temperature of 27°C, ±1°C (80°F, ±2°F) shall be poured quickly into the funnel and allowed to spray onto the specimen.

8.13.5.5 The following operations shall then be executed as rapidly as possible:

(1) The specimen shall be removed from the hoops and placed between sheets of blotting paper on a flat horizontal surface.
(2) The metal roller shall be rolled quickly forward and back one time over the paper without application of any pressure other than the weight of the roller.
(3) A square 100 mm × 100 mm (4 in. × 4 in.) shall be cut out of the center of the wet portion of the specimen and weighed to the nearest 0.05 g. This weight shall be designated the "wet weight." Not more than 30 seconds shall elapse between the time the water has ceased flowing through the spray nozzle and the start of the weighing.
(4) The same 100 mm (4 in.) square shall be conditioned as specified in 8.1.2 until it has dried and reached moisture equilibrium with the surrounding standard atmosphere for textiles.
(5) Following this conditioning it shall be reweighed.
(6) This weight shall be designated the "dry weight."

8.13.5.6 The percent water absorption shall be calculated using the following equation: *Percent water absorption* = [(*wet weight* − *dry weight*) / (*dry weight*)] × 100.

8.13.6 Report.

8.13.6.1 The percent water absorption for each specimen shall be recorded and reported.

8.13.6.2 The average percent water absorption for all tested specimens shall be calculated and reported.

8.13.7 Interpretation. The average percent water absorption shall be used to determine pass or fail performance.

8.14 Thread Heat Resistance Test.

8.14.1 Application. This test method shall apply to each type of thread used in the construction of garments, helmets, gloves, and footwear.

8.14.2 Sample Preparation.

8.14.2.1 Samples shall be 150 mm (6 in.) or greater in length.

8.14.2.2 Samples shall be conditioned as specified in 8.1.2.

8.14.3 Specimens.

8.14.3.1 Samples shall be 150 mm (6 in.) or greater in length.

8.14.3.2 At least three specimens of each thread type shall be tested.

8.14.4 Apparatus.

8.14.4.1* An electrically heated stage having a circular depression large enough to insert a micro cover glass shall be used. The stage shall have a variable transformer controlling the rate of heat input into the stage.

8.14.4.2 The following equipment shall also be used:

(1) An armored stem thermometer with a range of 150°C to 300°C, accurate to 1°C
(2) A low-powered magnifying glass
(3) Two micro cover glasses
(4) Spatula, pick needle, or other instrument for applying pressure to the cover glasses
(5) Soxhlet extraction apparatus

8.14.4.3* The following reagents and reference materials shall be used:

(1) Chloroform, USP
(2) U.S. Pharmacopeia reference standards for melting point calibration of the apparatus

8.14.5 Procedure.

8.14.5.1 The sample shall be extracted with chloroform for a minimum of 20 extractions in a Soxhlet extractor and dried. The specimen shall then be cut into lengths of 2 mm (1/16 in.) or less to serve as the specimens for testing.

8.14.5.2 The apparatus shall be calibrated by determining the melting point of a pure material of known material of known melting point. The melting point of the pure material shall be 260°C, ±20°C. The value obtained shall agree within 1°C of the known value of the reference material.

8.14.5.3 Following each successive determination of melting temperature for the reference material and for test specimens, the stage in each case shall be cooled to at least 230°C before a new specimen is placed for testing.

8.14.5.4 The specimen shall be placed in a small mound on the cover glass and covered with another cover glass. The two cover glasses shall be pressed together and placed in the circular depression on the stage. The temperature of the stage shall be raised to within 485°C and thereafter at a rate of 3° to 4°C per minute. At this rate of temperature rise, a slight pressure shall be applied on the upper glass cover with a spatula, pick needle, or other instrument, so that the complete fiber is in contact with the cover glass.

8.14.5.5 When the temperature of the stage reaches 260°C, +5/−0°C, the specimen shall be observed with the aid of the magnifying glass for ignition, melting, or charring.

8.14.6 Report. Observations of ignition, melting, and charring shall be recorded and reported for each specimen.

8.14.7 Interpretation. Any specimen showing ignition, melting, or charring shall constitute failure of the sample.

8.15 Corrosion Resistance Test.

8.15.1 This test method shall apply to hardware items on garments, helmets, gloves, and footwear.

8.15.2 Modifications to this test method for testing garment and glove hardware shall be as specified in 8.15.10.

8.15.3 Modifications to this test method for testing helmet hardware shall be as specified in 8.15.11.

Copyright National Fire Protection Association
Provided by IHS under license with NFPA
No reproduction or networking permitted without license from IHS
Not for Resale

8.15.4 Modifications to this test method for testing footwear hardware shall be as specified in 8.15.12.

8.15.5 Sample Preparation.

8.15.5.1 Samples shall be as specified in 8.15.10, 8.15.11, or 8.15.12.

8.15.5.2 Samples shall be conditioned as specified in 8.1.2.

8.15.6 Specimens.

8.15.6.1 Specimens shall be the same as the samples.

8.15.6.2 At least five specimens shall be tested for each hardware type.

8.15.7 Procedure.

8.15.7.1 Specimens shall be tested in accordance with ASTM B 117, *Standard Practice for Using Salt Spray (Fog) Apparatus*. Salt spray shall be 5 percent saline solution, and test exposure shall be for 20 hours.

8.15.7.2 Immediately following the test exposure and prior to examination, specimens shall be rinsed under warm, running tap water and dried with compressed air.

8.15.7.3 Specimens shall then be examined visually with the unaided eye to determine pass or fail.

8.15.7.4 The functionality of each specimen shall be evaluated.

8.15.8 Report. The presence of corrosion and the functionality of each specimen shall be recorded and reported.

8.15.9 Interpretation. One or more hardware specimens failing this test shall constitute failing performance for the hardware type.

8.15.10 Specific Requirements for Testing Garment and Glove Hardware. Samples for conditioning shall be whole hardware items.

8.15.11 Specific Requirements for Testing Helmets. Samples for conditioning shall be whole helmets.

8.15.12 Specific Requirements for Testing Footwear. Samples for conditioning shall be whole footwear.

8.16 Liquid Penetration Resistance Test.

8.16.1 Application.

8.16.1.1 This test shall apply to garments, gloves, and footwear materials.

8.16.1.2 Modifications to this test method for testing garment materials shall be as specified in 8.16.7.

8.16.1.3 Modifications to this test method for testing gloves materials shall be as specified in 8.16.8.

8.16.1.4 Modifications to this test method for testing footwear materials shall be as specified in 8.16.9.

8.16.2 Sample Preparation.

8.16.2.1 Samples shall be 1 m (1 yd) square of material for garments and garment seams and whole elements for gloves and footwear.

8.16.2.2 Garment material samples shall be conditioned as specified in 8.1.3 followed by conditioning as specified in 8.1.2.

8.16.2.3 Footwear samples shall be conditioned as specified in 8.1.2 only.

8.16.2.4 Glove material samples shall be conditioned as specified in 8.1.10 followed by conditioning as specified in 8.1.2.

8.16.3 Specimens.

8.16.3.1 Specimens shall be as specified in 8.16.7, 8.16.8, or 8.16.9.

8.16.3.2 Specimens shall be 75 mm (3 in.) squares of each composite type.

8.16.3.3 At least three specimens per liquid shall be tested for each material type.

8.16.3.4 Where the same materials are used as the barrier layer throughout the product, testing of seams only in lieu of testing both material and seams shall be permitted.

8.16.4 Procedure.

8.16.4.1 Liquid penetration resistance testing shall be conducted in accordance with ASTM F 903, *Standard Test Method for Resistance of Protective Clothing Materials to Penetration by Liquids,* exposure procedure C.

8.16.4.2 Each of the following liquids shall be tested separately against each sample specimen:

(1) Aqueous film-forming foam (AFFF), 3 percent concentrate
(2) Battery acid (37 percent w/w sulfuric acid)
(3) Fire-resistant hydraulic fluid, phosphate ester base
(4) Surrogate gasoline fuel C as defined in ASTM D 471, *Standard Test Method for Rubber Property — Effect of Liquids,* a 50/50 percent volume of toluene and iso-octane
(5) Swimming pool chlorinating chemical containing at least 65 percent free chlorine (saturated solution)

8.16.4.3 The normal outer surface of the material as oriented in the clothing item shall be exposed to the liquid.

8.16.5 Report. The pass or fail result for each specimen shall be recorded and reported.

8.16.6 Interpretation. One or more failures of any specimen against any liquid shall constitute failure of the material.

8.16.7 Specific Requirements for Testing Garment Materials. Specimens shall consist of the barrier layer, which is intended to prevent the penetration of liquids.

8.16.8 Specific Requirements for Testing Glove Materials. Three specimens shall be taken from sample gloves at the palm and back and shall include seam areas. Only that separable layer of the glove intended to prevent the penetration of liquids shall be tested. Samples and specimens shall be permitted to be materials representative of those used in the construction of the glove.

8.16.9 Specific Requirements for Testing Footwear Materials. Three specimens shall be representative of the moisture barrier, and three specimens shall be representative of each type of moisture barrier seam. Only that separable layer of the footwear item intended to prevent the penetration of liquids shall be tested. Footwear shall be subjected only to the conditioning specified in 8.1.2 prior to testing.

8.17 Viral Penetration Resistance Test.

8.17.1 Application.

8.17.1.1 This test shall apply to garments, gloves, and footwear materials.

Copyright National Fire Protection Association
Provided by IHS under license with NFPA
No reproduction or networking permitted without license from IHS
Not for Resale

8.17.1.2 Modifications to this test method for testing garment materials shall be as specified in 8.17.7.

8.17.1.3 Modifications to this test method for testing glove materials shall be as specified in 8.17.8.

8.17.1.4 Modifications to this test method for testing footwear materials shall be as specified in 8.17.9.

8.17.2 Sample Preparation.

8.17.2.1 Samples shall be 1 m (1 yd) square of material for garments and garment seams and whole elements for gloves and footwear.

8.17.2.2 Garment material samples shall be conditioned as specified in 8.1.3 followed by conditioning as specified in 8.1.2.

8.17.2.3 Footwear samples shall be conditioned as specified in 8.1.2 only.

8.17.2.4 Glove material samples shall be conditioned as specified in 8.1.10 followed by conditioning as specified in 8.1.2.

8.17.3 Specimens.

8.17.3.1 Specimens shall be as specified in 8.17.7, 8.17.8, or 8.17.9.

8.17.3.2 Specimens shall be 75 mm (3 in.) squares of each composite type. A minimum of three specimens per liquid shall be tested for each material type.

8.17.3.3 At least three specimens per liquid shall be tested for each material type.

8.17.3.4 Where the same materials are used as the barrier layer throughout the product, testing of seams only in lieu of testing both material and seams shall be permitted.

8.17.4 Procedure.

8.17.4.1 Biopenetration resistance testing shall be conducted in accordance with ASTM F 1671, *Standard Test Method for Resistance of Materials Used in Protective Clothing to Penetration by Blood-Borne Pathogens Using Phi-X174 Bacteriophage as a Test System.*

8.17.4.2 The normal outer surface of the material as oriented in the clothing item shall be exposed to the liquid.

8.17.5 Report. The pass or fail result for each specimen shall be recorded and reported.

8.17.6 Interpretation. One or more failures of any specimen shall constitute failure of the material.

8.17.7 Specific Requirements for Testing Garment Materials. Specimens shall consist of the barrier layer that is intended to prevent the penetration of liquids.

8.17.8 Specific Requirements for Testing Glove Materials. Three specimens shall be taken from sample gloves at the palm and back and shall include seam areas. Only that separable layer of the glove intended to prevent the penetration of liquids shall be tested. Samples and specimens shall be permitted to be materials representative of those used in the construction of the glove.

8.17.9 Specific Requirements for Testing Footwear Materials. Three specimens shall be representative of the moisture barrier, and three specimens shall be representative of each type of moisture barrier seam. Only that separable layer of the footwear item intended to prevent the penetration of liquids shall be tested. Footwear shall be subjected only to the conditioning specified in 8.1.2 prior to testing.

8.18 Flame Resistance Test 2.

8.18.1 Application. This test method shall apply to protective helmets and goggles.

8.18.1.1 Helmets shall be tested to Procedure A. Where helmets include antiglare material on the underside of the brim, helmets shall also be tested to Procedure B.

8.18.1.2 Goggles shall be tested to Procedure C only.

8.18.2 Sample Preparation. No sample preparation shall be performed.

8.18.3 Specimens.

8.18.3.1 Specimens shall be complete helmets or goggles.

8.18.3.2 At least three specimens shall be tested for each of the tests in this section.

8.18.4 Apparatus.

8.18.4.1 A standard Bunsen burner shall be used.

8.18.4.2 The Bunsen burner shall be fueled by methane gas, 99 percent purity or better.

8.18.4.3 A control valve system with a delivery rate designed to furnish gas to the burner under a pressure of 3.5 kPa, +0.7/−0 kPa (0.5 psi, +0.1/−0.0 psi) at the burner shall be utilized.

8.18.4.4 The barrel of the Bunsen burner shall be 13 mm, ±3 mm (½ in., ±⅛ in.) in diameter. A flame spreader shall not be used.

8.18.5 Procedures.

8.18.5.1 Procedure A.

8.18.5.1.1 The helmet shall be seated on the ISO J headform specified in Figure 8.23.4.1 according to the manufacturer's positioning index, as specified in the manufacturer's instruction for the specific helmet.

8.18.5.1.2 The flame of the Bunsen burner shall be adjusted to produce a 50 mm, ±1.5 mm (2.0 in., ±1/16 in.) blue flame with an inner cone of 25 mm, ±1.5 mm (1 in., ±1/16 in.). The temperature of the flame at the tip of the inner cone shall be measured and shall be 1200°C, ±100°C (2912°F, ±180°F). The tip of the inner cone in the flame shall then be applied to the helmet shell from below the helmet at an angle of 90 degrees to the basic plane as shown in Figure 8.18.5.1.2:

(1) At the intersection of the front edge of the brim and midsagittal plane
(2) At the intersection of each side of the brim and the coronal plane
(3) At the intersection of the rear edge of the brim and the midsagittal plane

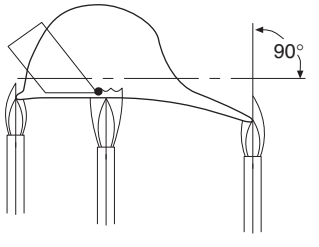

FIGURE 8.18.5.1.2 Test Procedure A.

Copyright National Fire Protection Association
Provided by IHS under license with NFPA
No reproduction or networking permitted without license from IHS
Not for Resale

8.18.5.1.3 The flame shall be applied for 15 seconds, +1/−0 seconds; the flame shall then be removed and the duration of the afterflame and afterglow shall be measured and recorded.

8.18.5.2 Procedure B.

8.18.5.2.1 The helmet shall be seated on the ISO J headform specified in Figure 8.23.4.1 according to the manufacturer's positioning index, as specified in the manufacturer's instruction for the specific helmet.

8.18.5.2.2 The flame of the Bunsen burner shall be adjusted to produce a 50 mm, ±1.5 mm (2.0 in., ±1⁄16 in.) blue flame with an inner cone of 25 mm, ±1.5 mm (1 in., ±1⁄16 in.). The temperature of the flame at the tip of the inner cone shall be measured and shall be 1200°C, ±100°C (2912°F, ±180°F). The tip of the inner cone in the flame shall then be applied at the helmet surface, ±5 mm (±13⁄64 in.) at any point under the brim and 13 mm, ±3 mm (½ in., ±⅛) from the edge of the brim.

8.18.5.2.3 The flame shall be applied to the test surface for 5 seconds, +1/−0 seconds; the flame shall then be removed and the duration of the afterflame shall be measured and recorded.

8.18.5.3 Procedure C.

8.18.5.3.1 The goggle specimen shall be attached to an appropriate test fixture so that the lower edge of the specimen is exposed. The test setup shall be as shown in Figure 8.18.5.3.1.

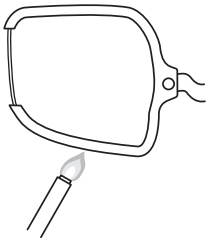

FIGURE 8.18.5.3.1 Test Procedure C.

8.18.5.3.2 The flame of the Bunsen burner shall be adjusted to produce a 50 mm, ±1.5 mm (2.0 in., ±1⁄16 in.) blue flame with an inner cone of 25 mm, ±1.5 mm (1 in., ±1⁄16 in.). The temperature of the flame at the tip of the inner cone shall be measured and shall be 1200°C, ±100°C (2912°F, ±180°F). The tip of the inner cone of the flame shall be applied on the outer edge of the specimen at the lowest exposed edge of the specimen. The burner shall be held to the test point of the specimen in an angle of 45 degrees, ±10 degrees.

8.18.5.3.3 After 15 seconds, +1/−0 seconds, the flame shall be removed and the duration of the afterflame measured and recorded.

8.18.6 Report.

8.18.6.1 Afterflame times shall be recorded and reported for each specimen at each flame impingement location.

8.18.6.2 The average afterflame times shall be calculated and recorded and reported for each flame impingement location.

8.18.6.3 The afterflame times shall be reported to the nearest 0.2 second.

8.18.7 Interpretation. Pass or fail performance shall be based on the longest measured afterflame times.

8.19 Top Impact Resistance Test (Force).

8.19.1 Application. This test method shall apply to protective helmets.

8.19.2 Sample Preparation.

8.19.2.1 Samples shall be complete helmets.

8.19.2.2 Samples shall be conditioned for each environmental condition specified in 8.1.2, 8.1.4, 8.1.5, and 8.1.6 prior to each impact.

8.19.3 Specimens.

8.19.3.1 Specimens shall be complete helmets.

8.19.3.2 At least three specimens shall be tested as specified for each environmental condition.

8.19.4 Apparatus.

8.19.4.1 An aluminum ISEA size 7 headform shall be used. The headform shall have a mass of 3.6 kg, ±0.5 kg (8 lb, ±1.0 lb). The test headform shall be the nominal dimensions of the headform in Table 8.19.4.1 and Figure 8.19.4.1(a) through Figure 8.19.4.1(c).

8.19.4.2 A steel drop mass of 3.58 kg, ±0.05 kg (7.9 lb, ±0.10 lb) shall be used. The striking face of the drop mass shall be a spherical segment with a radius of 50 mm, ±8 mm (1.9 in., ±0.3 in.) and a chord length of at least 75 mm (3 in.).

8.19.4.3 An electronic force measurement system with the following minimum specifications shall be used:

(1) Range, 4450 N (1000 lbf)
(2) Peak force measurement accuracy, ±2.5 percent
(3) Resolution, 22 N (5 lbf)
(4) Load cell rigidity, $4.4\,Y \times 10^9$ N/m ($2.5\,Y \times 10^7$ lb/in.)
(5) Minimum mechanical resonant frequency of the headform/load cell system, 5000 Hz
(6) Load cell diameter, 75 mm (3 in.)

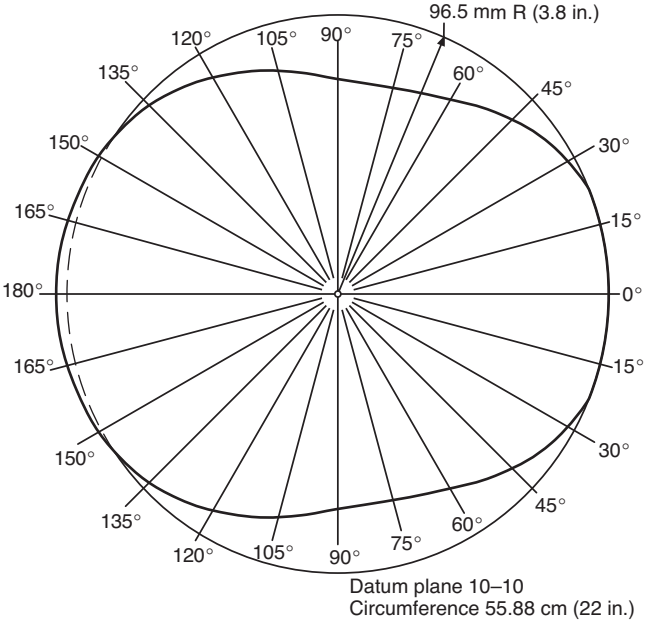

FIGURE 8.19.4.1(a) ISEA Size 7 Headform, Top.

Copyright National Fire Protection Association
Provided by IHS under license with NFPA
No reproduction or networking permitted without license from IHS
Not for Resale

Table 8.19.4.1 Data for Contour Drawing of ISEA Headform

Plane	Distance from Datum Plane (mm)	Vertical Sections 0°	15°	30°	45°	60°	75°	90°	105°	120°	135°	150°	165°	180°
Horizontal Plane														
0-0	99	0	0	0	0	0	0	0	0	0	0	0	0	0
1-1	95	22.5	22.5	23.0	25.5	26.5	28.0	28.5	31.0	33.0	36.0	39.0	38.7	40.0
2-2	90	39.5	40.0	40.0	40.5	40.5	40.5	41.5	43.5	47.5	50.0	53.0	53.0	54.5
3-3	85	53.5	54.0	55.7	51.5	50.5	50.0	51.5	53.5	57.0	60.5	64.0	64.5	65.5
4-4	80	62.5	63.0	60.9	59.0	57.0	57.0	57.5	60.5	63.5	67.3	70.7	70.7	72.2
5-5	70	72.5	74.0	71.5	68.2	65.5	64.5	65.3	68.0	72.0	75.7	79.1	80.0	82.0
6-6	60	82.0	82.0	79.5	75.0	71.0	69.4	70.1	73.0	77.5	81.7	85.1	87.5	87.9
7-7	50	87.3	87.0	84.5	79.0	74.0	71.5	72.0	75.7	80.9	85.8	89.4	91.0	92.3
8-8	40	90.2	90.5	87.5	81.5	75.5	73.0	73.5	76.9	82.7	88.3	91.3	93.5	95.0
9-9	20	94.0	94.0	90.5	83.5	77.1	73.7	74.2	77.8	84.3	91.0	95.5	97.6	98.5
Datum Plane														
10-10	0	96.5	96.5	93.0	84.6	77.5	73.5	74.2	79.0	85.0	92.5	96.5	98.8	99.9
11-11	20	96.5	96.5	93.0	84.6	77.5	73.5	72.0	70.0	78.5	84.0	90.0	91.0	95.0
12-12	40	96.5	96.5	93.0	84.6	77.5	73.5	70.0	63.5	70.0	75.0	81.0	82.0	84.0
13-13	60	96.5	96.5	93.0	84.6	77.5	73.5	68.0	58.0	57.5	63.0	69.0	69.0	72.0
14-14	80	96.5	96.5	93.0	84.6	77.5	73.5	66.0	54.0	48.0	53.0	59.0	60.0	63.0
15-15	100	96.5	96.5	93.0	84.6	77.5	73.5	64.0	52.0	48.0	49.0	54.0	56.0	59.0
16-16	115.9	96.5	96.5	96.5	96.5	96.5	96.5	96.5	96.5	96.5	96.5	96.5	96.5	96.5
17-17	128.6	96.5	96.5	96.5	96.5	96.5	96.5	96.5	96.5	96.5	96.5	96.5	96.5	96.5

Note: All dimensions ±5 mm.
For SI units, 25 mm = 1 in.

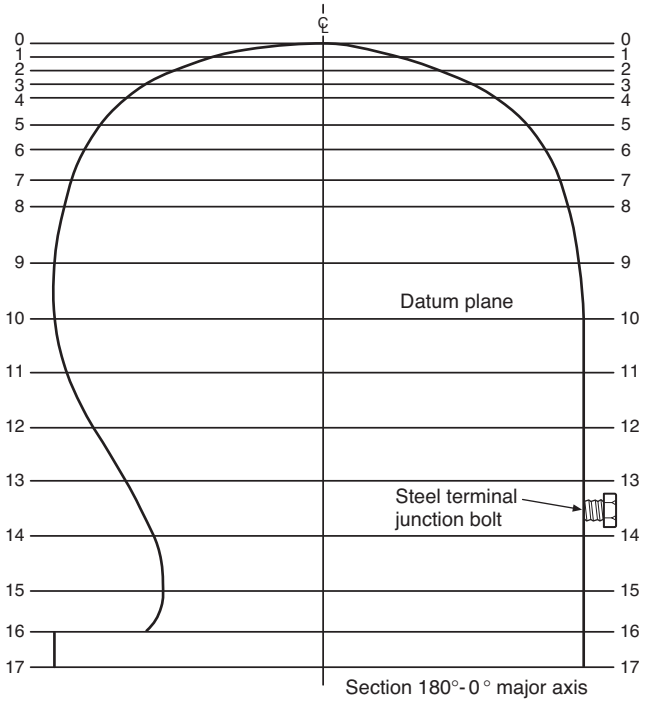

FIGURE 8.19.4.1(b) ISEA Size 7 Headform, Side with Modification for Steel Terminal Junction Bolt.

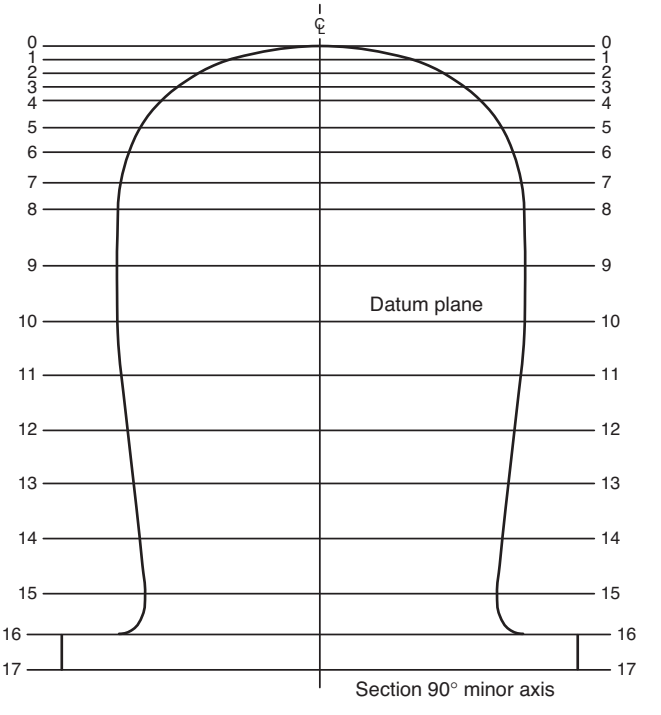

FIGURE 8.19.4.1(c) ISEA Size 7 Headform, Front.

Copyright National Fire Protection Association
Provided by IHS under license with NFPA
No reproduction or networking permitted without license from IHS
Not for Resale

8.19.4.4 The system frequency response shall comply with SAE J211, *Instrumentation for Impact Test,* Channel Frequency Class 1000 specifications. The minimum mechanical resonant frequency shall be calculated from the following formula:

$$f = \frac{\sqrt{kg/m}}{2\pi}$$

where:
f = minimum mechanical resonant frequency
kg = load cell rigidity (N/m or lbf/ft)
m = mass of the structure on top of the load cell (kg or slugs)

8.19.4.5 All surfaces in contact with the load cell shall have a surface finish of at least 0.8×10^{-6} m (32×10^{-6} in.) rms. In addition, those surfaces in contact with the load cell shall be flat to within 12.7×10^{-6} m (500×10^{-6} in.).

8.19.4.6 The load cell shall have a backup mass of at least 540 kg (1200 lb). The load cell assembly shall be rigidly mounted between the headform structure and a steel plate at least 305 mm (1 ft) square and 25 mm (1 in.) thick. The backup mass shall be concrete or a rigid material of equal or greater density at least 610 mm (2 ft) square.

8.19.4.7 The surface of the steel plate, in the area of the load cell assembly mounting, shall be flat within ±0.15 mm (±0.005 in.) and within 1 degree of level. The steel plate shall be rigidly attached to and in intimate contact with the backup mass.

8.19.4.8 The vertical centerline of the drop mass, the headform, and the load cell shall all be colinear within 3 mm (⅛ in.). The sensitive axis of the load cell shall be aligned within 1 degree of vertical. The guide or guides shall be vertical (or, in the case of a double guide system, parallel) to within 6 mm (¼ in.) per 3 m (10 ft) of length.

8.19.4.9* The instrumentation calibration shall be verified at least before and after each test series or at the beginning and end of each day of testing, whichever is the shorter length of time.

8.19.4.10 The test system shall be analyzed dynamically to assure that any mechanical resonances associated with transducer mountings do not distort the output data.

8.19.4.11 Prior to testing, the instrumentation shall be allowed to warm up until stability is achieved.

8.19.4.12 Throughout calibration, verification, and testing, the ambient temperature shall be 20°C to 28°C (68°F to 82°F), and the relative humidity shall be 30 to 70 percent.

8.19.5 Procedure.

8.19.5.1 Specimen helmets shall be adjusted to a size sufficiently large to prevent binding. Sample helmets shall be positioned and secured to properly fit on the headform with the horizontal center plane parallel within 5 degrees of the reference plane. The front-to-back centerline of the shell shall be within 13 mm (½ in.) of the midsagittal plane of the headform. Helmets shall be subjected to the environmental conditions specified in 8.1.2, 8.1.4, 8.1.5, and 8.1.6 prior to each impact and within the specified time after being removed from conditioning.

8.19.5.2 The impactor shall be dropped from a height that yields an impact velocity within 2 percent of 5.47 m/s (17.9 ft/s). A means of verifying the impact velocity to within 2 percent for each impact shall be incorporated.

8.19.5.3 The verification tests shall demonstrate an accuracy of 2.5 percent or better in the measured force.

8.19.6 Report.

8.19.6.1 The peak force and impact velocity shall be recorded and reported for each test.

8.19.6.2 The results of each system verification shall be made part of the test results for the helmets being tested.

8.19.7 Interpretation.

8.19.7.1 Disengagement of, deformation of, or damage to the helmet shell or component parts shall not of itself constitute failure.

8.19.7.2 Pass or fail performance shall be determined for each specimen. One or more helmet specimens failing this test shall constitute failing performance.

8.20 Physical Penetration Resistance Test.

8.20.1 Application. This test method shall apply to protective helmets.

8.20.2 Sample Preparation.

8.20.2.1 Samples shall be complete helmets.

8.20.2.2 Samples shall be conditioned for each environmental condition specified in 8.1.2, 8.1.4, 8.1.5, and 8.1.6 prior to each physical penetration.

8.20.3 Specimens.

8.20.3.1 Specimens shall be complete helmets.

8.20.3.2 At least three specimens shall be tested as specified for each environmental condition.

8.20.4 Apparatus.

8.20.4.1 The ISO size J headform shall conform to the nominal dimensions in Figure 8.23.4.1. Above the test line, it shall have an electrically conductive surface that is electrically connected to the contact indicator.

8.20.4.2 The penetration striker shall have a mass of 1 kg, +0.02/−0/00 kg (2.2 lb, +0.01/−0.00 lb). The point of the striker shall be a cone with an included angle of 60 degrees, ±½ degree, a height of 38 mm (1½ in.), and a tip radius of 0.5 mm, ±0.1 mm (0.020 in., ±0.004 in.). The hardness of the striking tip shall be Rockwell Scale C-60, minimum. The penetration striker shall be electrically connected to the contact indicator.

8.20.4.3 The contact indicator shall indicate when electrical contact has been made between the penetration striker and the conductive surface of the test headform. The contact indicator shall have a response time of less than 0.5 second.

8.20.4.4 The test shall be conducted at an ambient temperature of 20°C to 28°C (68°F to 82°F), and the relative humidity shall be 30 percent to 70 percent.

8.20.5 Procedure.

8.20.5.1 The environmentally conditioned helmet shall be placed on the rigidly mounted test headform and secured by the helmet retention system or by other means that will not interfere with the test. The helmet shall be positioned so that the penetration striker shall impact perpendicular to the helmet. The helmet shall be adjusted to a size sufficient to properly fit on the headform with the horizontal center plane parallel and within

Copyright National Fire Protection Association
Provided by IHS under license with NFPA
No reproduction or networking permitted without license from IHS
Not for Resale

5 degrees of the reference plane. The front-to-back centerline of the shell shall be within 13 mm (0.5 in.) of the midsagittal plane of the headform.

8.20.5.2 The drop height of the penetration striker shall be adjusted so that the velocity at impact is 7 m/s, ±0.1 m/s (23 ft/s, ±0.5 ft/s). The penetration striker shall be dropped to strike the sample helmet shell within a circle whose diameter is 75 mm (3 in.) and whose center shall be the geometric center of the shell. The penetration striker shall not fall on any portion of the ridges or make contact with the headform.

8.20.6 Report. The pass or fail result for each helmet shall be recorded and reported.

8.20.7 Interpretation. One or more helmet specimens failing this test shall constitute failing performance.

8.21 Electrical Insulation Test 1.

8.21.1 Application. This test method shall apply to helmets: Procedure A shall apply to all helmets, and Procedure B shall apply to helmets that include metallic hardware mounted on the helmet shell.

8.21.2 Sample Preparation.

8.21.2.1 Samples shall be complete helmets.

8.21.2.2 Samples shall be conditioned as specified in 8.1.2.

8.21.3 Specimens.

8.21.3.1 Specimens shall be complete helmets.

8.21.3.2 At least three specimens shall be tested in each test.

8.21.4 Apparatus.

8.21.4.1 The following equipment shall be provided for Procedure A:

(1) A source of 60 Hz alternating current variable from 0 volts to 2200 volts true rms
(2) Wiring and terminals for application of voltage to the water in the vessel
(3) A voltmeter to measure the applied voltage within 2 percent
(4) A milliammeter to measure the leakage current to within 2 percent
(5) A vessel, containing tap water, of sufficient size to submerge an inverted helmet to the dielectric test plane
(6) A frame for suspending the test specimen in water

8.21.4.2 The following equipment shall be provided for Procedure B:

(1) A source of 60 Hz alternating current variable from 0 volts to 2200 volts true rms
(2) Wiring and terminals for application of voltage across the crown of the test specimen
(3) A voltmeter to measure the applied voltage within 2 percent
(4) A milliammeter to measure the leakage current to within 2 percent
(5) A vessel, containing fresh tap water, of sufficient size to submerge an inverted helmet shell
(6) An aluminum ISEA/size 7 headform modified in accordance with Table 8.19.4.1 and Figure 8.19.4.1(a) through Figure 8.19.4.1(c)

8.21.5 Procedures.

8.21.5.1 Procedure A.

8.21.5.1.1 Where helmets have a vertical adjustment to the suspension system, the vertical adjustment shall be set to raise the helmet to the highest position with maximum crown clearance between the headform and the inside of the helmet shell crown prior to establishing the helmet positioning index. The helmet shall be placed on the ISO size J headform specified in Figure 8.23.4.1 and positioned according to the helmet positioning index.

8.21.5.1.2 After proper positioning in accordance with the helmet positioning index, the dielectric test plane specified in Figure 8.21.5.1.2 shall be marked on the shell of the helmet. The dielectric test plane shall be the plane that passes through the point located 85 mm above the basic plane, where the basic plane and the midsagittal plane intersect at the front of the headform, and the point located 60 mm above the basic plane, where the basic plane and the midsagittal plane intersect at the rear of the headform.

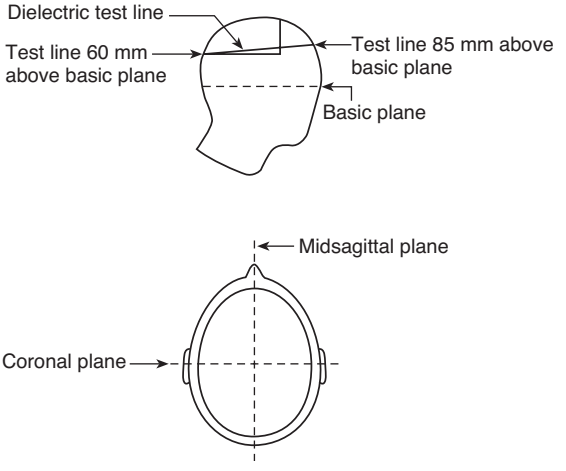

FIGURE 8.21.5.1.2 Test Setup.

8.21.5.1.3 The helmet shall be inverted and the inside of the helmet shall be filled with fresh tap water up to the dielectric test plane. The helmet shall then be submerged in the same type of water up to the same level as the water inside the helmet. Care shall be taken to keep the unsubmerged portion of the test sample dry so that flashover will not occur when voltage is applied.

8.21.5.1.4 A 60 Hz alternating current voltage shall be applied to the water in the vessel and increased to 2200 volts. The voltage shall be maintained at 2200 volts, ±2 percent for 1 minute.

8.21.5.2 Procedure B.

8.21.5.2.1 The specimen and retention system shall be completely submerged in tap water for a period of 15 minutes, +2/−0 minutes. The helmet shall be removed from the water and allowed to drain for not longer than 2 minutes.

8.21.5.2.2 The specimen shall then be mounted on the modified ISEA size 7 aluminum headform, with chin strap firmly secured to the headform by means of the conductive terminal junction bolt.

8.21.5.2.3 A lead carrying 60 Hz alternating voltage shall be attached to all metal parts on the helmet's exterior at or above the brim edge. A second pickup lead shall be attached to the terminal junction bolt. A voltage shall be applied to the external

Copyright National Fire Protection Association
Provided by IHS under license with NFPA
No reproduction or networking permitted without license from IHS
Not for Resale

helmet shell lead and increased to 2200 volts, ±2 volts. The voltage shall be maintained for 15 seconds.

8.21.6 Report. Any current leakage or evidence of breakdown shall be recorded and reported for each helmet.

8.21.7 Interpretation. One or more helmet specimens failing this test shall constitute failing performance.

8.22 Suspension System Retention Test.

8.22.1 Application. This test method shall apply to helmets.

8.22.2 Sample Preparation.

8.22.2.1 Samples shall be complete helmets.

8.22.2.2 Samples shall be conditioned as specified in 8.1.2.

8.22.3 Specimens.

8.22.3.1 Specimens shall be complete helmets.

8.22.3.2 At least three specimens shall be tested.

8.22.4 Apparatus.

8.22.4.1 The suspension system retention test fixtures shall consist of rigid material of sufficient thickness to facilitate firm attachment of the inverted helmet to the tensile test machine as shown in Figure 8.22.4.1.

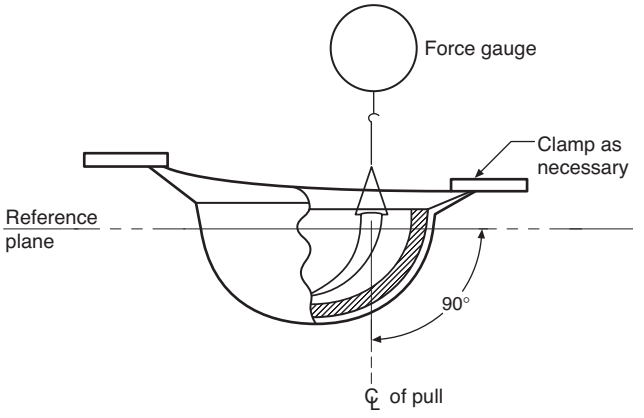

FIGURE 8.22.4.1 Suspension System Test Setup.

8.22.4.2 The calibrated tensile testing machine shall be capable of measuring the force applied to the retention system within 2 percent at the specified forces.

8.22.5 Procedure.

8.22.5.1 Each helmet suspension strap shall be cut such that sufficient length of strap remains to be gripped by the movable jaw of the testing machine.

8.22.5.2 Specimens shall be positioned and secured in the tensile testing machine so that the helmet's reference plane is horizontal.

8.22.5.3 Each attachment point of the crown strap shall be tested by applying a pull force along the centerline of the suspension strap, perpendicular to the reference plane, to a maximum load of 22 N, ±2 N (5 lb, ±0.5 lb). The force shall be increased from 0 N to 22 N, ±2 N (0 lbf to 5 lbf, ±0.5 lbf) at a load rate of 25 mm, ±5 mm (1 in., ±3⁄16 in.) per minute.

8.22.5.4 After application of the force is complete, the load shall be released and the suspension system shall be inspected for any separation from the helmet shell.

8.22.6 Report. The pass or fail result for each attachment point shall be recorded and reported.

8.22.7 Interpretation.

8.22.7.1 Separation of the helmet suspension from the helmet shall constitute failing performance.

8.22.7.2 One or more helmet specimens failing this test shall constitute failing performance.

8.23 Retention System Test.

8.23.1 Application. This test method shall apply to helmets.

8.23.2 Sample Preparation.

8.23.2.1 Samples shall be complete helmets.

8.23.2.2 Samples shall be conditioned as specified in 8.1.2.

8.23.3 Specimens.

8.23.3.1 Specimens shall be complete helmets.

8.23.3.2 At least three specimens shall be tested.

8.23.4 Apparatus.

8.23.4.1 An ISO size J headform shall be used and shall be of the nominal dimensions given in Figure 8.23.4.1.

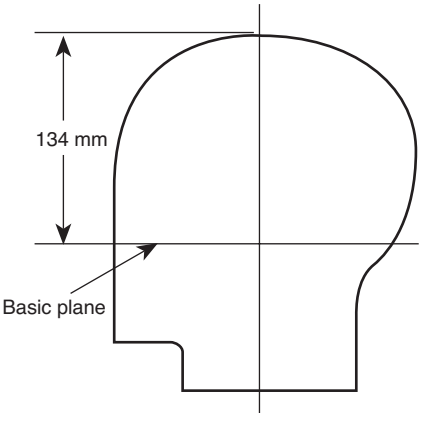

FIGURE 8.23.4.1 ISO Size J Headform.

8.23.4.2 A mechanical chin structure shall be designed for use with a calibrated tensile test machine. The mechanical chin structure shall consist of two rollers 13 mm (½ in.) in diameter with centers 75 mm (3 in.) apart. The mechanical chin structure shall conform with Figure 8.23.4.2.

8.23.4.3 The calibrated tensile test machine that shall be capable of measuring the force applied to the retention system within 2 percent at the specified force.

8.23.5 Procedure.

8.23.5.1 The test shall be conducted at an ambient temperature of 20°C to 28°C (68°C to 82°F), and the relative humidity shall be 30 percent to 70 percent.

8.23.5.2 Prior to testing, the test machine shall be allowed to warm up until stability is achieved.

Copyright National Fire Protection Association
Provided by IHS under license with NFPA
No reproduction or networking permitted without license from IHS
Not for Resale

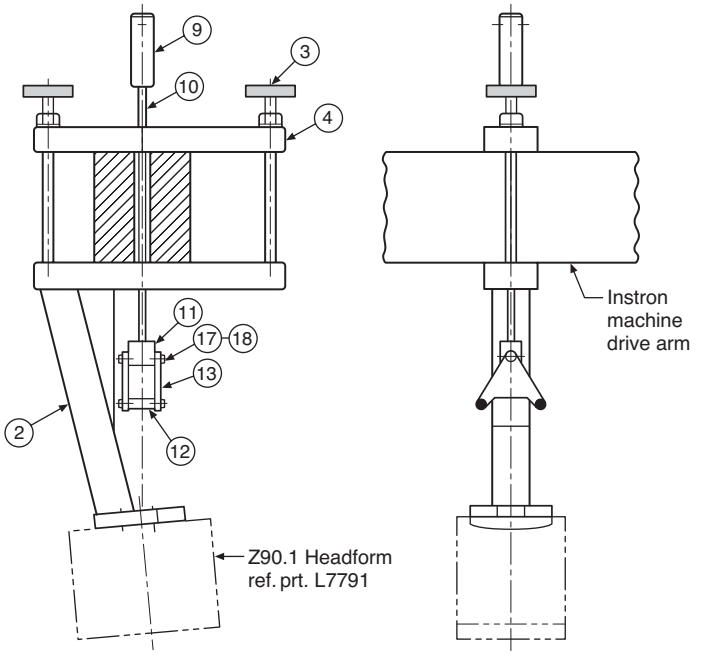

ITEM NO.	PART NO.	SHT. NO.	DESCRIPTION	MAT'L.	VEND. OR STR. SIZE	QTY.
1	L8539	1	Retention Test Fixt. Assy.	—	—	1
2		2	Main Support Assy.	—	—	1
3		2	Knurled Knob Assy.	—	—	2
4		2	Rect. Alum. Bar	6061-T6	1 1/2 x 3 x 14 Lg.	1
5		2	Rect. Alum. Bar	6061-T6	1 1/2 x 3 x 14 Lg.	1
6		2	Alum. Bar	6061-T6	2 x 2 x 7 1/2 Lg.	1
7		2	Alum. Bar	6061-T6	2 x 2 x 12.96 Lg.	1
8		2	Alum. Flat	6061-T6	3/4 x 4 1/2 x 5 Lg.	1
9		2	C.F. Steel Rod	Stl.	1 1/4 Dia. x 4 Lg.	1
10		2	C.F. Steel Rod	Stl.	3/8 Dia. x 22 Lg.	1
11		2	C.F. Steel Flat	Stl.	1 x 1 1/4 x 1 1/2 Lg.	1
12		2	Hollow Steel Tube	Stl.	.500 O.D. .384 I.D. x 1 1/2	2
13		2	C.F. Steel Flat	Stl.	1/4 x 3 1/4 x 3 3/4 Lg.	2
14		2	C.F. Steel Flat	Stl.	39 x 3/4 Thk.	2
15		2	C.F. Steel Rod	Stl.	3/4 ∅ x 10 1/2 Lg.	2
16		2	Hex Nut	Stl.	3/4 - 10 Unc.	2
17		1	Hex Hd. Bolt	Stl.	3/8 - 24 Unf. x 2 1/2 Lg.	3
18		1	Hex Nut	Stl.	3/8 - 24 Unf.	3

Notes:
1. Remove burrs and break sharp edges.
2. All steel parts are to be solvent cleaned and zinc plated 0.0003 to 0.0010 in. thick.
3. Headform is to be bolted in place using 3 socket-head cap screws 1/2–13 UNC x 1 1/2 Lg.

FIGURE 8.23.4.2 Retention System Test Setup.

8.23.5.3 The headform and mechanical chin structure shall be positioned such that the distance between the bottom of the rollers and the top of the headform is 210 mm, ±10 mm (8.3 in., ±0.4 in.). The chin strap shall be passed around the rollers, and the helmet shall be secured to the headform. The chin strap shall be adjusted and preloaded to 45 N, ±5 N (10 lbf, ±1 lbf). The distance between the top of the helmet and the rollers shall be measured and recorded to the nearest 0.5 mm (1/64 in.).

8.23.5.4 The force applied to the retention system shall be increased smoothly from 45 N (10 lbf) to 225 N (50 lbf) at a rate between 9.0 N/s (2 lbf/s) and 45 N/s (10 lbf/s).

8.23.5.5 The load rate of the tensile testing machine shall be 25 mm (1 in.) per minute to a limit of 225 N (50 lbf).

8.23.5.6 The distance between the top of the helmet and the rollers shall be measured and recorded again after the force has been maintained at 225 N (50 lbf) for 60 seconds, +15/–0 seconds. The difference between the second measurement and the first shall be the retention system elongation.

8.23.6 Report. The retention system elongation shall be measured, recorded, and reported for each helmet specimen.

8.23.7 Interpretation. One or more helmet specimens failing this test shall constitute failing performance.

8.24 Flame Resistance Test 3.

8.24.1 Application. This test method shall be applied to glove composite materials.

8.24.2 Sample Preparation.

8.24.2.1 Samples shall be the composite used in actual glove construction, consisting of each single layer, with all layers arranged in proper order and stitched along the edges using the same thread as used in the construction of the glove.

8.24.2.2 Samples shall be a rectangle at least 50 mm (2 in.) wide by 150 mm (6 in.) long.

8.24.2.3 Samples shall be conditioned as specified in 8.1.10, followed by conditioning as specified in 8.1.2.

8.24.2.4 Other samples shall be conditioned as specified in 8.1.2 only.

8.24.3 Specimens.

8.24.3.1 Specimens shall be cut from the samples.

8.24.3.2 At least three specimens shall be tested for each material.

8.24.3.3 Testing shall be conducted on specimens taken from samples conditioned according to 8.24.2.3 and 8.24.2.4.

8.24.3.4 In each test, the specimen's normal outer surface shall be exposed to the flame.

8.24.3.5 If a proposed glove construction has stitched-through seams, three additional specimens containing these seams shall be tested. The seam shall be in the direction of the 150 mm (6.0 in.) dimension.

8.24.4 Apparatus.

8.24.4.1 The test apparatus shall consist of a burner, crucible tongs, support stand, utility clamp, stopwatch, butane gas, gas regulator valve system, and measuring scale, and the following criteria shall be met:

(1) The burner shall be a high temperature, liquefied petroleum gas–type Fisher burner.
(2) The stopwatch or other timing device shall measure the burning time to the nearest 0.1 second.
(3) The butane shall be of commercial grade, 99.0 percent pure or better.

--`,,```,,,,````-`-`,,`,,`,`,,`---
Copyright National Fire Protection Association
Provided by IHS under license with NFPA
No reproduction or networking permitted without license from IHS
Not for Resale

(4) The gas regulator system shall consist of a control valve system with a delivery rate designed to furnish gas to the burner under a pressure of 17.3 kPa, ±1.7 kPa (2.5 psi, ±0.25 psi) at the reducing valve.
(5) The flame height shall be adjusted at the reducing valve producing a pressure of 0.7 kPa, ±0.07 kPa (0.1 psi, ±0.01 psi).

8.24.4.2 A freestanding flame height indicator shall be used to assist in adjusting the burner flame height. The indicator shall mark a flame height of 75 mm (3 in.) above the top of the burner.

8.24.4.3 A specimen support assembly shall be used that consists of a frame and steel rod of 2 mm (1/16 in.) diameter to support the specimen in an L-shaped position as shown in Figure 8.24.4.3.

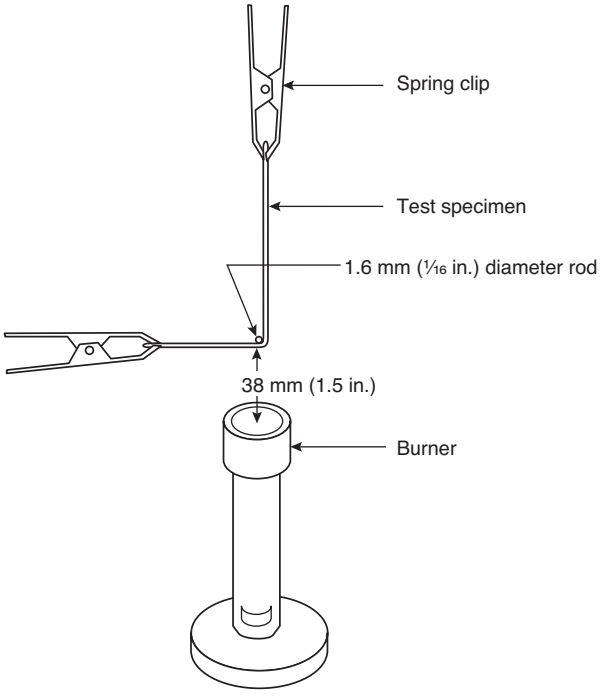

FIGURE 8.24.4.3 Relationship of Test Material to Burner.

8.24.4.4 The horizontal portion of the specimen shall be not less than 50 mm (2 in.), and the vertical portion shall be not less than 100 mm (4 in.). The specimen shall be held at each end by spring clips under light tension as shown in Figure 8.24.4.3.

8.24.5 Procedure.

8.24.5.1 The burner shall be ignited, and the test flame shall be adjusted to a height of 75 mm (3 in.) with the gas on/off valve fully open and the air supply completely and permanently off, as it is important that the flame height be closely controlled. The 75 mm (3 in.) height shall be obtained by adjusting the orifice in the bottom of the burner so that the top of the flame is level with the marked flame height indicator.

8.24.5.2 With the specimen mounted in the support assembly, the burner shall be moved such that the middle of the folded corner contacts the flame as shown in Figure 8.24.4.3.

8.24.5.3 The burner flame shall be applied to the specimen for 12 seconds. After 12 seconds, the burner shall be removed.

8.24.5.4 The afterflame time shall be measured as the time, in seconds, to the nearest 0.1 second, that the specimen continues to flame after the burner is removed from the flame.

8.24.5.5 Each layer of the specimen shall be examined for melting or dripping.

8.24.5.6 The specimen shall then be further examined for char length. The char length shall be determined by measuring the length of the tear through the center of the charred area as specified in 8.24.5.6.1 through 8.24.5.6.4.

8.24.5.6.1 The specimen shall be folded lengthwise and creased, by hand, along a line through the highest peak of the charred area.

8.24.5.6.2 The hook shall be inserted in the specimen or a hole that is 6 mm (¼ in.) in diameter or less that is punched out for the hook, at one side of the charred area 6 mm (¼ in.) from the adjacent outside edge at the point where the specimen contacted the steel rod, and 6 mm (¼ in.) in from the lower end.

8.24.5.6.3 A weight of sufficient size such that the weight and hook together shall equal the total tearing load required in Table 8.24.5.6.3 shall be attached to the hook. The specific load for determining char length applicable to the weight of the composite specimen shall be as shown in Table 8.24.5.6.3.

Table 8.24.5.6.3 Determining Tearing Weight

Specified Weight of Material Before Any Fire-Retardant Treatment or Coating		Total Tearing Weight for Determining Charred Length	
g/m^2	oz/yd^2	kg	lb
68 to 203	2.0 to 6.0	0.1	0.25
>203 to 508	>6.0 to 15.0	0.2	0.5
>508 to 780	>15.0 to 23.0	0.3	0.75
>780	>23.0	0.45	1.0

8.24.5.6.4 A tearing force shall be applied gently to the specimen by grasping the side of the material at the edge of the char opposite from the load and raising the specimen and weight clear of the supporting surface. The end of the tear shall be marked off on the edge and the char length measurement made along the undamaged edge.

8.24.6 Report.

8.24.6.1 The afterflame time and char length shall be reported for each specimen.

8.24.6.2 The average afterflame time and char length shall also be calculated and reported.

8.24.6.3 The afterflame time shall be reported to the nearest 0.1 second and the char length to the nearest 2.5 mm (1/10 in.).

8.24.6.4 Observations of melting or dripping for each specimen shall be reported.

8.24.7 Interpretation. Pass or fail performance shall be based on any observed hole formation, melting or dripping, the average afterflame time, and the average char length.

Copyright National Fire Protection Association
Provided by IHS under license with NFPA
No reproduction or networking permitted without license from IHS
Not for Resale

8.25 Conductive Heat Resistance Test.

8.25.1 Application.

8.25.1.1 This test method shall apply to glove and upper footwear materials.

8.25.1.2 Modifications to this method for glove materials shall be as specified in 8.25.7.

8.25.1.3 Modifications to this method for footwear upper materials shall be as specified in 8.25.8.

8.25.2 Sample Preparation.

8.25.2.1 Samples shall be as specified in ASTM F 1060, *Standard Test Method for Thermal Protective Performance of Materials for Protective Clothing for Hot Surface Contact.*

8.25.2.2 Samples shall be conditioned as specified in 8.1.2.

8.25.3 Specimens.

8.25.3.1 Specimens shall be the same as samples.

8.25.3.2 At least three specimens shall be tested.

8.25.4 Procedure.

8.25.4.1 Sample specimens shall be tested in accordance with ASTM F 1060, *Standard Test Method for Thermal Protective Performance of Materials for Protective Clothing for Hot Surface Contact.*

8.25.4.2 Sample specimens shall be tested using an exposure temperature of 280°C (536°F). The pressure applied during the test shall be 3.5 kPa (½ psi).

8.25.4.3 The time in seconds to pain and to second-degree burn (blister), as predicted by the Stoll Human Tissue Burn Tolerance Criteria, shall be recorded.

8.25.5 Report.

8.25.5.1 The time to pain and time to second-degree burn for each specimen shall be reported.

8.25.5.2 The average time to pain and time to second-degree burn shall be calculated and recorded and reported.

8.25.5.3 If the time to pain or time to second-degree burn is greater than 30 seconds, then the time to pain or time to second degree burn shall be recorded and reported as ">30 s."

8.25.6 Interpretation.

8.25.6.1 Pass or fail determinations shall be based on the average time to pain and average time to second-degree burn of all specimens tested.

8.25.6.2 If an individual result from any test set varies more than ±8 percent from the average result, the results from the test set shall be discarded and another set of specimens shall be tested.

8.25.7 Specific Requirement for Testing Gloves.

8.25.7.1 Specimens shall be representative of glove body composite construction at the palm of the hand and at the palm side of the fingers.

8.25.7.2 Specimens shall be stitched around the perimeter using the same thread used in glove construction.

8.25.7.3 Glove specimens shall be tested before and after being subjected to the procedure specified in 8.1.10.

8.25.8 Specific Requirements for Testing Footwear Upper Materials. Footwear specimens shall include the thinnest portions of the footwear upper.

8.26 Cut Resistance Test.

8.26.1 Application.

8.26.1.1 This test method shall apply to glove and footwear upper materials.

8.26.1.2 Modifications to this test method for evaluation of glove materials shall be as specified in 8.26.7.

8.26.1.3 Modifications to this test method for evaluation of footwear upper materials shall be as specified in 8.26.8.

8.26.1.4 Modifications to this test method for the evaluation of external CBRN barrier layers shall be as specified in 8.26.9.

8.26.2 Sample Preparation.

8.26.2.1 Samples shall be whole gloves or footwear uppers.

8.26.2.2 Samples shall be conditioned as specified in 8.1.2.

8.26.3 Specimens.

8.26.3.1 Specimens shall be the size specified in ASTM F 1790, *Test Methods for Measuring Cut Resistance of Materials Used in Protective Clothing*, consisting of all layers.

8.26.3.2 At least three specimens shall be tested.

8.26.4 Procedure. Specimens shall be evaluated in accordance with ASTM F 1790, *Test Methods for Measuring Cut Resistance of Materials Used in Protective Clothing*, with the modification that specimens shall be tested to a specific load with the measurement of blade travel distance.

8.26.5 Report.

8.26.5.1 The blade travel distance shall be recorded and reported to the nearest 1 mm (1/32 in.) for each sample specimen.

8.26.5.2 The average blade travel distance in mm shall be recorded and reported for all specimens tested.

8.26.6 Interpretation. The average blade travel distance shall be used to determine pass or fail performance.

8.26.7 Specific Requirements for Testing Glove Materials.

8.26.7.1 Specimens shall be taken from the back and palm of the glove and shall not include seams.

8.26.7.2 Cut resistance testing shall be performed under a load of 200 g.

8.26.8 Specific Requirements for Testing Footwear Upper Materials.

8.26.8.1 Specimens shall be taken from the parts of the footwear upper that provide uniform thickness and shall not include seams.

8.26.8.2 Cut resistance testing shall be performed under a load of 800 g.

8.26.9 Specific Requirements for Testing External CBRN Barrier Layers.

8.26.9.1 Specimens shall consist of only the CBRN barrier layer material, as specified by the manufacturer.

8.26.9.2 Cut resistance testing shall be performed under a load of 200 g.

Copyright National Fire Protection Association
Provided by IHS under license with NFPA
No reproduction or networking permitted without license from IHS
Not for Resale

8.27 Puncture Resistance Test 1.

8.27.1 Application.

8.27.1.1 This test shall be applied to glove and footwear upper materials and footwear wear surfaces where the CBRN terrorism agent protection option is applied.

8.27.1.2 Modifications to this test method for testing glove materials shall be as specified in 8.27.7.

8.27.1.3 Modifications to this test method for testing footwear upper material shall be as specified in 8.27.8.

8.27.1.4 Modifications to this test method for testing footwear wear surface materials shall be as specified in 8.27.9.

8.27.2 Sample Preparation.

8.27.2.1 Samples shall be complete gloves or footwear upper sections.

8.27.2.2 Samples shall be conditioned as specified in 8.1.2.

8.27.3 Specimens.

8.27.3.1 Specimens shall be at least 150 mm (6 in.) square.

8.27.3.2 At least three specimens shall be tested.

8.27.4 Procedure. Specimens shall be tested in accordance with ASTM F 1342, *Standard Test Method for Resistance of Protective Clothing Materials to Puncture*.

8.27.5 Report.

8.27.5.1 The puncture force shall be recorded and reported for each specimen to the nearest 0.4 N (0.1 lbf) of force.

8.27.5.2 The average puncture force shall be recorded and reported for all specimens tested.

8.27.6 Interpretation. The average puncture force shall be used to determine pass or fail performance.

8.27.7 Specific Requirements for Testing Glove Materials. Specimens shall consist of each composite of the palm and palm side of the fingers with layers arranged in the proper order. Where the specimen composites of the palm and palm side of the fingers are identical, only one representative composite shall be required to be tested.

8.27.8 Specific Requirements for Testing Footwear Upper Materials. Specimens shall consist of each composite of the footwear item used in the actual footwear configuration, with layers arranged in proper order. Specimens shall be taken from the thinnest portion of the footwear upper.

8.27.9 Specific Requirements for Testing CBRN Footwear Upper Materials. Specimens shall consist of each material or composite representing the wear surface of the footwear, with layers arranged in proper order. Specimens shall be taken from the thinnest portion of the footwear wear surface material or composite.

8.28 Glove Hand Function Test.

8.28.1 Application. This test shall apply to gloves.

8.28.2 Sample Preparation.

8.28.2.1 Samples shall be whole glove pairs, sizes small and large.

8.28.2.2 Samples shall be conditioned as specified in 8.1.10, followed by conditioning as specified in 8.1.2.

8.28.3 Specimens.

8.28.3.1 Specimens shall be whole glove pairs, sizes small and large, in new, as-distributed condition.

8.28.3.2 At least three glove pairs each for small and large sizes shall be tested.

8.28.3.3 Each glove pair shall be tested as a complete set of gloves in new, as-distributed condition.

8.28.3.4 Glove pair specimens shall not receive special softening treatments prior to tests.

8.28.4 Apparatus. The apparatus shall conform to the requirements specified in ASTM F 2010, *Standard Test Method for Evaluation of Glove Effects on Wearer Hand Dexterity Using a Modified Pegboard Test*.

8.28.5 Procedures. Testing shall be conducted in accordance with ASTM F 2010, *Standard Test Method for Evaluation of Glove Effects on Wearer Hand Dexterity Using a Modified Pegboard Test*, with the following modifications:

(1) Each size of gloves shall be evaluated with at least one separate test subject with the same pair of gloves.
(2) A minimum of three different glove pairs shall be evaluated for each size specified in 8.28.2.1.

8.28.6 Report.

8.28.6.1 The average percent of barehand control shall be recorded and reported for each test subject.

8.28.6.2 The average percent of barehand control for all test subjects shall be calculated, recorded, and reported.

8.28.7 Interpretation. The average percent of barehand control for all test subjects shall be used to determine pass or fail performance.

8.29 Grip Test.

8.29.1 Application. This test method shall apply to protective gloves.

8.29.2 Sample Preparation.

8.29.2.1 Samples shall be whole glove pairs, sizes small and large, in new, as-distributed condition.

8.29.2.2 Samples shall be conditioned as specified in 8.1.10, followed by conditioning as specified in 8.1.2.

8.29.2.3 Other samples shall be conditioned as specified in 8.1.10 followed by conditioning as specified in 8.1.7.

8.29.3 Specimens.

8.29.3.1 Specimens shall be whole glove pairs, sizes small and large.

8.29.3.2 At least three glove pairs each for small and large sizes shall be tested.

8.29.3.3 Glove pair specimens shall not receive special softening treatments prior to tests.

8.29.3.4 Specimens shall be tested for each material and construction combination.

8.29.4 Apparatus. Grip testing shall be evaluated with the use of a 9.5 mm (⅜ in.) diameter, three-strand prestretched polyester rope attached to a calibrated force-measuring device.

--`,,```,,,,````-`-`,,`,,`,`,,`---

Copyright National Fire Protection Association
Provided by IHS under license with NFPA
No reproduction or networking permitted without license from IHS
Not for Resale

8.29.5 Procedure.

8.29.5.1 Test subjects shall be selected such that their hand dimensions are as close as possible to those specified in accordance with manufacturing glove-sizing guidelines

8.29.5.2 Each test subject shall make three successive attempts to exert as much horizontal pulling force as possible, using the rope and force-measuring device, using both hands one in front of the other. Thumbs shall not overlap the fingers, and both feet shall be firmly planted on the ground. The average weight hoisted over the three trials shall be the barehand weight lift capability.

8.29.5.3 Dry-conditioned sample gloves shall be tested on a dry rope and then on a wet rope.

8.29.5.4 Wet-conditioned sample gloves shall be tested on a dry rope and then on a wet rope.

8.29.5.5 Each test subject shall be tested with a minimum of three pairs of gloves. Test subjects shall attempt one trial with each pair of gloves for a minimum of six grip tests for each set of conditions, with at least three grip tests with small-sized gloves and three grip tests with large-sized gloves.

8.29.5.6 Weight-pulling capacity with gloves shall be compared with barehand weight-lifting capability. The percentage of weight-pulling capacity with gloves to barehand weight-lifting capability shall be calculated as follows:

$$\text{Percent of barehand control} = \frac{WPC_g}{WLC_b} \times 100$$

where:
WPC_g = weight-pulling capacity with gloves
WLC_b = barehand weight-lifting capability

8.29.6 Report. The percent of barehand control shall be recorded and reported for each glove pair specimen, condition, and test subject tested.

8.29.7 Interpretation. One or more glove pair specimens failing this test shall constitute failing performance.

8.30 Glove Donning Test.

8.30.1 Application. This test shall apply to protective gloves.

8.30.2 Sample Preparation.

8.30.2.1 Samples shall be whole glove pairs, sizes small and large.

8.30.2.2 Samples shall be conditioned as specified in 8.1.2.

8.30.3 Specimens.

8.30.3.1 Specimens shall be whole glove pairs, sizes small and large.

8.30.3.2 At least three glove pairs each for small and large sizes shall be tested.

8.30.4 Procedure.

8.30.4.1 Test subjects shall be selected such that their hand dimensions are as close as possible to those specified in accordance with manufacturing glove-sizing guidelines.

8.30.4.2 The time to don one glove of the glove pair specimen shall be determined by measuring the time it takes for the test subject to don the single glove on three consecutive trials without altering the sample glove linings between donnings.

8.30.4.3 Each donning trial shall start with the glove lying in front of the test subject and shall end when the test subject's fingers are seated in the glove sample.

8.30.4.4 The baseline donning time shall be the average of the first three donning times as determined in 8.30.4.2. The baseline donning time shall not exceed 10 seconds. The doffing time between donnings shall not exceed 10 seconds.

8.30.4.5 Glove pair specimens shall then be conditioned as specified in 8.1.10.

8.30.4.6 The final donning time shall be the average of the times for the first three donnings after removal from the final drying cycle as specified in 8.30.4.5. No preparation of the gloves shall be done.

8.30.5 Report.

8.30.5.1 The final donning time and the baseline donning time shall be reported to the nearest 0.1 second for each trial.

8.30.5.2 The average final and average baseline donning times shall be calculated, recorded, and reported.

8.30.5.3 Any inner liner or barrier layer separations shall be recorded and reported.

8.30.5.4 Any glove digits that do not allow full insertion shall be recorded and reported.

8.30.6 Interpretation.

8.30.6.1 Pass or fail determinations shall be made using the average final and average baseline donning times.

8.30.6.2 Any detachment of the inner liner or barrier layer shall constitute failing performance.

8.31 Overall Liquid Integrity Test 2.

8.31.1 Application. This test method shall apply to protective gloves.

8.31.2 Sample Preparation.

8.31.2.1 Samples shall be whole glove pairs, sizes small and large.

8.31.2.2 Samples shall be conditioned as specified in 8.1.10, followed by conditioning as specified in 8.1.2.

8.31.3 Specimens.

8.31.3.1 Specimens shall be whole glove pairs, sizes small and large.

8.31.3.2 At least three glove pairs each for small and large sizes shall be tested.

8.31.4 Apparatus.

8.31.4.1* A water-markable glove shall cover all areas of the tester's hand. The water-markable glove shall be constructed of a fabric that is easily water marked to determine leakage.

8.31.4.2 Water used for integrity testing shall be treated with a nonfoaming surfactant to lower its surface tension to 35 dynes/cm, ±5 dynes/cm.

8.31.5 Procedure.

8.31.5.1 Test subjects shall be selected such that their hand dimensions are as close as possible to those specified in accordance with manufacturing glove-sizing guidelines.

--`,,```,,,,````-`-`,,`,,`,`,,`---
Copyright National Fire Protection Association
Provided by IHS under license with NFPA
No reproduction or networking permitted without license from IHS
Not for Resale

8.31.5.2 The test subject shall don the glove specimen over the water-markable glove.

8.31.5.3 The test subject shall immerse the glove specimen to within 25 mm (1 in.) of the top of the body of the glove specimen for 5 minutes in 20°C, ±3°C (68°F, ±5°F) water. The test subject shall flex the glove specimen in a fist-clenching motion every 10 seconds.

8.31.5.4 The glove specimen shall be removed from the testing person's hand, and the inner glove shall be inspected for water marks.

8.31.6 Report. The appearance of water marks on the inner glove after testing any of the three gloves shall be recorded and reported.

8.31.7 Interpretation. The appearance of water marks on the inner glove after the testing of any glove shall be considered leakage and shall constitute failing performance.

8.32 Flame Resistance Test 4.

8.32.1 Application. This test method shall apply to protective footwear.

8.32.2 Sample Preparation.

8.32.2.1 Samples shall be whole footwear.

8.32.2.2 Samples shall be conditioned as specified in 8.1.2.

8.32.3 Specimens.

8.32.3.1 Specimens shall be whole footwear.

8.32.3.2 At least three specimens shall be tested.

8.32.4 Apparatus.

8.32.4.1 The test apparatus shall consist of a burner, crucible tongs, support stand, utility clamp, stopwatch, butane gas, gas regulator valve system, and measuring scale, and the following criteria shall be met:

(1) The burner shall be a high temperature, liquefied petroleum gas–type Fisher burner.
(2) The stopwatch or other timing device shall measure the burning time to the nearest 0.1 second.
(3) The butane shall be of commercial grade, 99.0 percent pure or better.
(4) The gas regulator system shall consist of a control valve system with a delivery rate designed to furnish gas to the burner under a pressure of 17.3 kPa, ±1.7 kPa (2.5 psi, ±0.25 psi) at the reducing valve.
(5) The flame height shall be adjusted at the reducing valve producing a pressure of 0.7 kPa, ±0.07 kPa (0.1 psi, ±0.01 psi).

8.32.4.2 A freestanding flame height indicator shall be used to assist in adjusting the burner flame height. The indicator shall mark a flame height of 75 mm (3 in.) above the top of the burner.

8.32.4.3 A specimen support assembly shall be used to support the footwear specimen above the burner flame.

8.32.5 Procedure.

8.32.5.1 The burner shall be ignited and the test flame shall be adjusted to a height of 75 mm (3 in.) with the gas on/off valve fully open and the air supply completely and permanently off, as it is important that the flame height be closely controlled. The 75 mm (3 in.) height shall be obtained by adjusting the orifice in the bottom of the burner so that the top of the flame is level with the marked flame height indicator.

8.32.5.2 With the specimen mounted in the support assembly, the burner shall be moved such that the flame contacts the specimen at the angles and the areas shown in Figure 8.32.5.2.

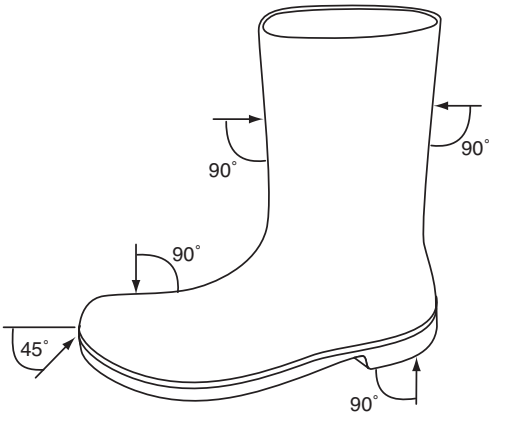

FIGURE 8.32.5.2 Test Areas.

8.32.5.3 The burner flame shall be applied to the specimen for 12 seconds. After 12 seconds, the burner shall be removed.

8.32.5.4 The afterflame time shall be measured as the time, in seconds, to the nearest 0.1 second that the specimen continues to flame after the specimen is removed from the flame.

8.32.5.5 Following the flame exposure, the specimen shall be removed and examined for burn-through. Each layer of the specimen shall be examined for melting or dripping.

8.32.6 Report.

8.32.6.1 The afterflame time shall be reported for each specimen. The average afterflame time shall also be calculated and reported. The afterflame time shall be reported to the nearest 0.1 second.

8.32.6.2 Observations of burn-through, melting, or dripping for each specimen shall be reported.

8.32.7 Interpretation. Pass or fail performance shall be based on any observed burn-through, melting, or dripping and on the average afterflame time.

8.33 Impact Resistance Test.

8.33.1 Application. This test method shall apply to the toe section of the footwear.

8.33.2 Sample Preparation.

8.33.2.1 Samples shall be complete footwear toes.

8.33.2.2 Samples shall be conditioned as specified in 8.1.2.

8.33.3 Specimens.

8.33.3.1 Specimens shall be complete footwear toes.

8.33.3.2 At least three specimens shall be tested.

--`,,```,,,,````-`-`,,`,,`,`,,`---

Copyright National Fire Protection Association
Provided by IHS under license with NFPA
No reproduction or networking permitted without license from IHS
Not for Resale

8.33.4 Procedure.

8.33.4.1 Footwear specimens shall be tested in accordance with ASTM F 2412, *Standard Test Methods for Foot Protection,* Section 5.

8.33.4.2 The impactor shall be dropped from a height that results in an impact velocity of 2995 mm/s, ±61 mm/s (117.9 in./s, ±2.4 in./s), creating a force of 101.7 J (75 ft-lbf).

8.33.5 Report. The minimum height of the clay cylinder, without rounding up, to the nearest 0.1 mm (0.004 in.) for each specimen shall be reported.

8.33.6 Interpretation. One or more footwear specimens failing this test shall constitute failing performance.

8.34 Ladder Shank Bend Resistance Test.

8.34.1 Application. This test method shall apply to footwear ladder shanks.

8.34.2 Sample Preparation.

8.34.2.1 Samples shall be complete footwear ladder shanks.

8.34.2.2 Samples shall be conditioned as specified in 8.1.2.

8.34.3 Specimens.

8.34.3.1 Specimens shall be complete footwear ladder shanks.

8.34.3.2 At least three specimens shall be tested.

8.34.4 Apparatus. The apparatus shall consist of a tensile testing machine, such as an Instron or equivalent, that challenges a specimen with a simulated ladder rung. A 32 mm diameter × 50 mm long (1¼ in. diameter × 2 in. long) noncompressible probe shall be mounted on the movable arm. The specimen support assembly shall consist of two 50 mm × 25 mm × 25 mm (2 in. × 1 in. × 1 in.) noncompressible blocks placed 50 mm (2 in.) apart as shown in Figure 8.34.4.

8.34.5 Procedure. The ladder shank shall be placed on mounting blocks as it would be oriented toward the ladder where the shank is affixed into the protective footwear and subjected to force on its center with the test probe operated at 50 mm/min (2 in./min).

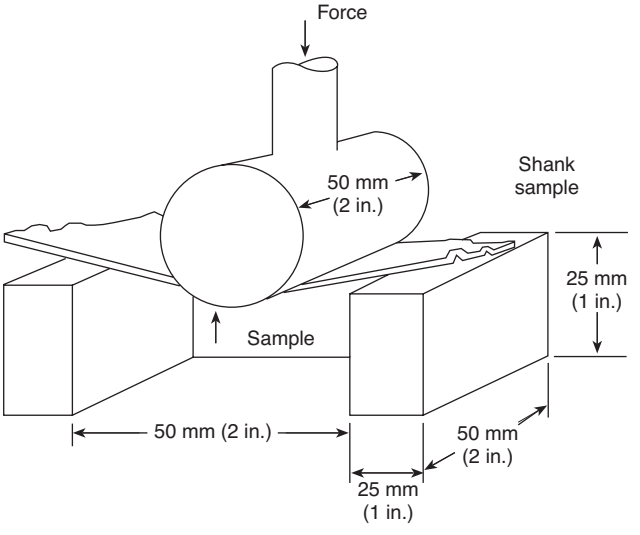

FIGURE 8.34.4 Shank Bend Test Setup.

8.34.6 Report. Deflection at 1780 N (400 lbf) shall be reported to the nearest 1 mm (1/32 in.). The average deflection shall be calculated and reported to the nearest 1 mm (1/32 in.).

8.34.7 Interpretation. Pass or fail performance shall be determined using the average deflection for all specimens tested.

8.35 Abrasion Resistance Test 3.

8.35.1 Application. This test method shall apply to footwear soles.

8.35.2 Sample Preparation.

8.35.2.1 Samples shall be complete footwear soles.

8.35.2.2 Samples shall be conditioned as specified in 8.1.2.

8.35.3 Specimens.

8.35.3.1 Specimens shall be complete footwear soles.

8.35.3.2 At least three specimens shall be tested.

8.35.3.3 Specimens shall be conditioned as specified in 8.1.2.

8.35.4 Procedure. Abrasion resistance shall be performed in accordance with ASTM D 1630, *Standard Test Method for Rubber Property — Abrasion Resistance (Footwear Abrader).*

8.35.5 Report. The abrasion resistance rating of each specimen shall be reported.

8.35.6 Interpretation. One or more footwear specimens failing this test shall constitute failing performance.

8.36 Puncture Resistance Test 2.

8.36.1 Application. This test method shall apply to footwear soles.

8.36.2 Sample Preparation.

8.36.2.1 Samples shall be complete footwear sole sections.

8.36.2.2 Samples shall be conditioned as specified in 8.1.2.

8.36.3 Specimens.

8.36.3.1 Specimens shall be complete sole sections.

8.36.3.2 At least three specimens shall be tested.

8.36.4 Procedure. Puncture resistance shall be performed in accordance with Section 11 of ASTM F 2412, *Standard Test Methods for Foot Protection.*

8.36.5 Report. The force required to puncture each specimen shall be reported.

8.36.6 Interpretation. One or more footwear specimens failing this test shall constitute failing performance.

8.37 Slip Resistance Test.

8.37.1 Application. This test method shall apply to footwear soles.

8.37.2 Sample Preparation.

8.37.2.1 Samples shall be whole footwear.

8.37.2.2 Samples shall be conditioned as specified in 8.1.2.

8.37.3 Specimens.

8.37.3.1 Specimens shall be whole footwear.

--`,,```,,,,````-`-`,,`,,`,`,,`---
Copyright National Fire Protection Association
Provided by IHS under license with NFPA
No reproduction or networking permitted without license from IHS
Not for Resale

8.37.3.2 At least three specimens shall be tested.

8.37.4 Procedure. Slip resistance shall be performed in accordance with ASTM F 489, *Standard Test Method for Static Coefficient of Friction of Shoe Sole and Heel Materials as Measured by the James Machine,* in a dry condition.

8.37.5 Report. The static coefficient of friction under a dry condition of each specimen shall be reported.

8.37.6 Interpretation. One or more footwear specimens failing this test shall constitute failing performance.

8.38 Electrical Insulation Test 2.

8.38.1 Application. This test shall apply to protective footwear.

8.38.2 Sample Preparation.

8.38.2.1 Samples shall be whole footwear.

8.38.2.2 Samples shall be conditioned as specified in 8.1.2.

8.38.3 Specimens.

8.38.3.1 Specimens shall be whole footwear.

8.38.3.2 At least three specimens shall be tested.

8.38.4 Procedure. Protective footwear shall be tested to 14,000 V (rms) in accordance with Section 9 of ASTM F 2412, *Standard Test Methods for Foot Protection*.

8.38.5 Report. Any current leakage or evidence of breakdown shall be recorded for each footwear item.

8.38.6 Interpretation. One or more footwear specimens failing this test shall constitute failing performance.

8.39 Eyelet and Stud Post Attachment Test.

8.39.1 Application. This test method shall apply to protective footwear eyelets and stud posts.

8.39.2 Sample Preparation.

8.39.2.1 Samples shall be whole footwear.

8.39.2.2 Samples shall be conditioned as specified in 8.1.2.

8.39.3 Specimens.

8.39.3.1 Specimens shall be 25 mm × 50 mm (1 in. × 2 in.) containing two eyelets and two stud posts.

8.39.3.2 At least three specimens from separate footwear items shall be tested.

8.39.4 Apparatus. A tensile testing machine shall be used with a traverse rate of 50 mm/min (2 in./min). Clamps measuring 25 mm × 38 mm (1 in. × 1½ in.) shall have gripping surfaces that are parallel, flat, and capable of preventing slippage of the specimen during the test.

8.39.5 Procedure.

8.39.5.1 The stud post or eyelet puller shall be inserted or attached to the upper position of the tensile machine.

8.39.5.2 The traverse rate shall be set at 50 mm/min (2 in./min).

8.39.5.3 The test eyelet or stud post shall be attached using the appropriate puller fixture.

8.39.5.4 The eyelet stay shall be clamped, but clamping the metal portion of the eyelets or stud hook in the lower clamps shall not be permitted.

8.39.5.5 The distance between the clamps and the stud hooks or eyelets shall be 1.6 mm to 3.2 mm (0.063 in. to 0.125 in.).

8.39.5.6 The test shall then be started.

8.39.6 Report.

8.39.6.1 The force shall reach a peak, decline slightly, and then increase to complete failure; however, the value at which the force first declines shall be recorded and reported as the initial failure point, as this is the separation point of the material around the eyelet or stud post.

8.39.6.2 The average force shall be calculated, recorded, and reported.

8.39.7 Interpretation. The average force shall be used to determine pass or fail.

8.40 Label Durability and Legibility Test.

8.40.1 Application.

8.40.1.1 This test method shall apply to labels on protective garments, helmets, gloves, and footwear.

8.40.1.2 Modifications to this test method for testing garment labels shall be as specified in 8.40.7.

8.40.1.3 Modifications to this test method for testing helmet labels shall be as specified in 8.40.8.

8.40.1.4 Modifications to this test method for testing glove labels all be as specified in 8.40.9.

8.40.1.5 Modifications to this test method for testing footwear labels shall be as specified in 8.40.10.

8.40.2 Sample Preparation.

8.40.2.1 Samples shall be as specified in 8.40.7, 8.40.8, 8.40.9, and 8.40.10.

8.40.2.2 Samples shall be conditioned as specified for the respective tests.

8.40.3 Specimens.

8.40.3.1 At least three specimens of each type of label shall be tested in each test.

8.40.3.2 Where labels have areas of "write-in" information, two additional specimens shall be tested that include those areas with sample information written in.

8.40.4 Procedures.

8.40.4.1 Laundering Durability Test.

8.40.4.1.1 Specimens shall be subjected to 10 cycles of laundering and drying using Machine Cycle 1, Wash Temperature V, and Drying Procedure Ai of AATCC 135, *Dimensional Changes in Automatic Home Laundering of Woven and Knit Fabrics*.

8.40.4.1.2 A 1.8 kg, ±0.1 kg (4.0 lb, ±0.2 lb) load shall be used. A laundry bag shall not be used.

8.40.4.1.3 Specimens shall be examined for legibility to the unaided eye by a person with 20/20 vision, or vision corrected to 20/20, at a nominal distance of 305 mm (12 in.) in a well-illuminated area.

8.40.4.2 Abrasion Durability Test.

8.40.4.2.1 Specimens shall be subjected to abrasion in accordance with ASTM D 4966, *Standard Test Method for Abrasion Resistance of Textile Fabrics*, with the following modifications:

Copyright National Fire Protection Association
Provided by IHS under license with NFPA
No reproduction or networking permitted without license from IHS
Not for Resale

(1) The standard abrasive fabric and the felt-backing fabric shall be soaked for 24 hours or agitated in distilled water so that they are thoroughly wet.
(2) The standard abrasive fabric shall be rewetted after each set of cycles with 20 ml (0.68 oz) of distilled water squirted from a squeeze bottle onto the center of the abrasive composite pad.
(3) Specimens shall be subjected to 200 cycles, 3200 revolutions, of the test apparatus.

8.40.4.2.2 Specimens shall be examined for legibility to the unaided eye by a person with 20/20 vision, or vision corrected to 20/20, at a nominal distance of 305 mm (12 in.) in a well-illuminated area.

8.40.4.3 Heat Durability Test.

8.40.4.3.1 Specimens shall be subjected to convective heat as specified in 8.1.8.

8.40.4.3.2 Specimens shall be examined for legibility to the unaided eye by a person with 20/20 vision, or vision corrected to 20/20, at a nominal distance of 305 mm (12 in.) in a well-illuminated area.

8.40.5 Report. The legibility for each specimen shall be recorded and reported as acceptable or unacceptable.

8.40.6 Interpretation. One or more label specimens failing this test shall constitute failing performance.

8.40.7 Specific Requirements for Testing Garment Labels.

8.40.7.1 For testing label legibility after laundering, specimens shall include individual labels sewn onto a 1 m (1 yd) square of ballast material no closer than 50 mm (2 in.) apart in parallel strips. The ballast material shall be as specified in AATCC 135, *Dimensional Changes in Automatic Home Laundering of Woven and Knit Fabrics*.

8.40.7.2 For testing label legibility after abrasion, specimens shall be individual labels.

8.40.7.3 For testing label legibility after convective heat exposure, specimens shall include individual labels sewn onto a separate 380 mm, ±13 mm (15 in., ±½ in.) square of material that meets the outer shell requirements of this standard.

8.40.7.4 Specimens shall be tested separately for legibility after laundering, abrasion, and heat durability as specified in 8.40.4.1, 8.40.4.2, and 8.40.4.3, respectively.

8.40.8 Specific Requirements for Testing Helmet Labels.

8.40.8.1 Samples for conditioning shall be whole helmets with labels attached.

8.40.8.2 Specimens shall be conditioned as specified in 8.1.4, 8.1.5, and 8.1.6 with the label examined legibility to the unaided eye by a person with 20/20 vision, or vision corrected to 20/20, at a nominal distance of 305 mm (12 in.) in a well-illuminated area.

8.40.8.3 Specimens shall also be tested separately for legibility after heat durability as specified in 8.40.4.3.

8.40.9 Specific Requirements for Testing Glove Labels.

8.40.9.1 For testing label legibility after laundering and heat durability, specimens shall include gloves with labels attached.

8.40.9.2 For testing label legibility after abrasion, specimens shall be individual labels.

8.40.9.3 Specimens shall be tested separately for legibility after laundering, abrasion, and heat durability as specified in 8.40.4.1, 8.40.4.2, and 8.40.4.3, respectively.

8.40.10 Specific Requirements for Testing Footwear Labels.

8.40.10.1 For testing label legibility after heat durability, specimens shall include footwear with labels attached.

8.40.10.2 For testing label legibility after abrasion, specimens shall be individual labels.

8.40.10.3 Specimens shall be tested separately for legibility after abrasion and heat durability as specified in 8.40.4.2 and 8.40.4.3, respectively.

8.41 Burst Strength Test.

8.41.1 Application. This test shall apply to knit materials used in gloves.

8.41.2 Sample Preparation.

8.41.2.1 Samples shall be a 0.5 m (20 in.) long section of knit material.

8.41.2.2 Samples shall be conditioned as specified in 8.1.2.

8.41.3 Specimens.

8.41.3.1 Specimens shall be the size specified in ASTM D 3787, *Standard Test Method for Hydraulic Bursting Strength of Knitted Goods and Nonwoven Fabrics — Ball Burst Testing Method*.

8.41.3.2 At least 10 specimens shall be tested.

8.41.3.3 Specimens shall include all layers of the wristlet used in glove construction.

8.41.4 Procedure. Specimens shall be tested as specified in ASTM D 3787, *Standard Test Method for Hydraulic Bursting Strength of Knitted Goods and Nonwoven Fabrics — Ball Burst Testing Method*.

8.41.5 Report.

8.41.5.1 The burst strength of each specimen shall be reported.

8.41.5.2 The average burst strength of all specimens shall be calculated, recorded, and reported.

8.41.6 Interpretation. The average burst strength shall be used to determine pass or fail performance.

8.42 Compression Resistance Test.

8.42.1 Application. This test method shall apply to the toe section of the footwear.

8.42.2 Sample Preparation.

8.42.2.1 Samples shall be complete footwear toes.

8.42.2.2 Samples shall be conditioned as specified in 8.1.2.

8.42.3 Specimens.

8.42.3.1 Specimens shall be complete footwear toes.

8.42.3.2 At least three specimens shall be tested.

8.42.4 Procedure.

8.42.4.1 Footwear specimens shall be tested in accordance with Section 6 of ASTM F 2412, *Standard Test Methods for Foot Protection*.

Copyright National Fire Protection Association
Provided by IHS under license with NFPA
No reproduction or networking permitted without license from IHS
Not for Resale

8.42.4.2 A compressive force of 11,121 N (2500 lbf) shall be applied.

8.42.5 Report. The minimum height of the clay cylinder, without rounding up, to the nearest 0.1 mm (0.004 in.) for each specimen shall be recorded and reported.

8.42.6 Interpretation. One or more footwear specimens failing this test shall constitute failing performance.

8.43 Metatarsal Protection Test.

8.43.1 Application. This test method shall apply to footwear.

8.43.2 Sample Preparation.

8.43.2.1 Samples shall be complete footwear.

8.43.2.2 Samples shall be conditioned as specified in 8.1.2.

8.43.3 Specimens.

8.43.3.1 Specimens shall be complete footwear.

8.43.3.2 At least three specimens shall be tested.

8.43.4 Procedure.

8.43.4.1 Footwear specimens shall be tested in accordance with Section 7 of ASTM F 2412, *Standard Test Methods for Foot Protection*.

8.43.4.2 The impactor shall be dropped from a height that results in an impact velocity of 2995 mm/s, ±61 mm/s (117.9 in./s, ±2.4 in./s), creating a force of 101.7 J (75 ft-lbf).

8.43.5 Report. The distance from the lowest point of the impression made in the wax form to the bottom surface of the form, without rounding up, to the nearest 0.1 mm (0.004 in.) for each specimen shall be recorded and reported.

8.43.6 Interpretation. One or more footwear specimens failing this test shall constitute failing performance.

8.44 Man-in-Simulant Test (MIST).

8.44.1 Application. This test method shall apply to CBRN protective ensembles.

8.44.2 Samples.

8.44.2.1 Samples shall consist of CBRN protective ensembles, including the ensemble garment, helmet, glove, and footwear elements, and the SCBA specified for the ensemble by the ensemble manufacturer. The hood interface component shall also be tested where the hood is not part of the CBRN ensemble garment elements.

8.44.2.2 The ensemble shall be tested with each style of the SCBA specified by the manufacturer.

8.44.2.3 Garment, glove, and hood elements shall be conditioned as specified in 8.1.9.

8.44.2.4 Where the ensemble garment element does not include booties and the chemical/CBRN barrier material is incorporated into footwear, the footwear shall be conditioned by flexing for 1,000,000 cycles in accordance with Appendix B of FIA 1209, *Whole Shoe Flex*.

8.44.2.5 Samples shall be conditioned at 21°C, ±6°C and 50 percent, ±30 percent relative humidity for at least 4 hours.

8.44.3 Specimens.

8.44.3.1 A minimum of four specimens shall be tested. The specimens shall represent a minimum of two different ensemble sizes.

8.44.3.2 Specimens shall be provided to fit or be adjustable to fit the selected test subjects in accordance with the manufacturer's sizing provisions that are specific to each element.

8.44.3.3* None of the components to be tested shall have been previously subjected to MIST testing unless it can be demonstrated that the items are free of contamination.

8.44.3.4 Underclothing and socks shall be permitted to be reused provided they have been laundered with a detergent that has been demonstrated not to cause interference with the analytical method.

8.44.4 Apparatus.

8.44.4.1 The test lab chamber and procedures shall be validated against the Test Operations Procedure (TOP 10-2-022), Man-In-Simulant Test (MIST) — Chemical Vapor Testing of Chemical/Biological Protective Suits, September 2001.

8.44.4.2 The test simulant shall be methyl salicylate (MS – $C_8H_8O_3$) CAS # 119-36-8, more commonly known as oil of wintergreen. The MS minimum purity shall be 95 percent. Vapor doses shall be measured using passive adsorbent dosimeters (PADs).

8.44.4.3 The test facility shall include areas for dressing, a Stage 1 undressing area adjacent and accessible to the chamber, and a Stage 2 undressing area adjacent and accessible to the Stage 1 undressing area.

8.44.4.4 The test shall be conducted in a sealed chamber with a minimum volume of sufficient dimensions to permit free movement of the test subject(s) fully dressed in the ensemble.

8.44.4.5 More than one test subject shall be permitted in the chamber at the same time, provided that they can complete all tasks completely in the appropriate time period and that they have an unobstructed direct path to the wind stream.

8.44.4.6 The test chamber shall have a temperature of 27°C, ±2°C; relative humidity of 65 percent, ±20 percent; and a nominal range of wind speed of 0.9 m/s to 2.2 m/s (2 mph to 5 mph).

8.44.4.7 The standard concentration of MS in the vapor chamber shall be 100 mg/m^3, ±5 mg/m^3, as measured by a real-time infrared analysis of the chamber air or other validated real-time analytical technique.

8.44.4.8 Infrared readings shall be taken every 60 seconds to verify compliance with the concentration requirement, and an air sample shall be taken at least every 10 minutes for validation of infrared readings.

8.44.4.9 Every step shall be taken to avoid generation of liquid aerosol.

8.44.4.10 During the test, a minimum of four PADs shall be placed inside the chamber at defined positions for a known duration. The four PADs shall be from the same lot as the dosimeters worn by the test subject and shall be used to calibrate the PAD lot used in the analysis.

8.44.4.11 The exposure time for the chamber PADs shall be 15 minutes, +5 minutes/–0 minutes.

Copyright National Fire Protection Association
Provided by IHS under license with NFPA
No reproduction or networking permitted without license from IHS
Not for Resale

8.44.4.12 All test subjects shall be medically and physically suitable to perform these tests without danger to themselves. A medical certificate for each test subject shall have been issued within 12 months prior to testing.

8.44.4.13 Test subjects shall be familiar with the use of chemical protective ensembles and with the selected SCBA.

8.44.4.14 The test shall be conducted using PADs that affix directly to the skin of the test subjects. The PAD used in ensemble certification shall be the same type of dosimeter that was used during the validation of the MIST test lab. The PADs shall be an adhesive-backed foil packet measuring 25 × 35 × 0.02 mm that contains an adsorbent material covered by a high-density polyethylene film that acts as a pseudo-skin barrier. The active surface sampling area of a PAD shall be 3.5 cm^2, +/−0.6 cm^2, and its uptake rate shall be 3.5 cm^3/min, +/−1 cm^3/min. The four chamber PADs shall be used to calibrate the lot of PADs used in the test.

8.44.5 Procedure.

8.44.5.1 Test subjects shall have followed pretrial procedures that include proper hydration and avoiding personal hygiene products that may contain MS.

8.44.5.2 PADs shall be placed on test subjects at the body region locations shown in Figure 8.44.5.2.

8.44.5.2.1 All PADs shall be applied in a clean dressing area by personnel who have followed pretrial procedures to minimize contamination. Test subjects shall also follow pretrial procedures to minimize contamination.

8.44.5.2.2 Cheek PADs shall be located entirely within the respirator facepiece, and all other PADs shall be located entirely outside the seal of the respirator facepiece.

8.44.5.3 Three additional PADs shall be used to conduct background sampling and for quality control during the trial. These PADs shall be located in the dressing area, the Stage 1 undress area, and the Stage 2 undress area.

8.44.5.4 The test subject shall don the protective ensemble and respirator in accordance with the manufacturer's instructions in an area located away from the test chamber. The test subject shall wear clothing under the CBRN protective ensemble as specified by the manufacturer. If no undergarments are specified or required by the manufacturer as part of the certified ensemble, the test subject shall wear a short-sleeve cotton shirt and shorts or underwear.

8.44.5.5 After sealing the ensemble, the test subject shall enter the test chamber, and the test chamber shall be sealed.

8.44.5.6 The test duration shall be 30 minutes in the chamber with an additional 5-minute decontamination period.

8.44.5.7 The start of the test, in which the test subject enters the MIST chamber, shall be initiated within 60 minutes after removal of the ensemble from conditioning environment.

8.44.5.8 Physical Exercise Routine.

8.44.5.8.1 Once the chamber concentration has been established, the test subject(s) shall perform the following physical activity protocol. The chamber concentration shall remain within acceptable limits during the exercise protocol.

(1) Drag 70 kg human dummy using both hands a distance of 10 m over 15-second period. Stop and rest for 15 seconds. Repeat exercise twice.

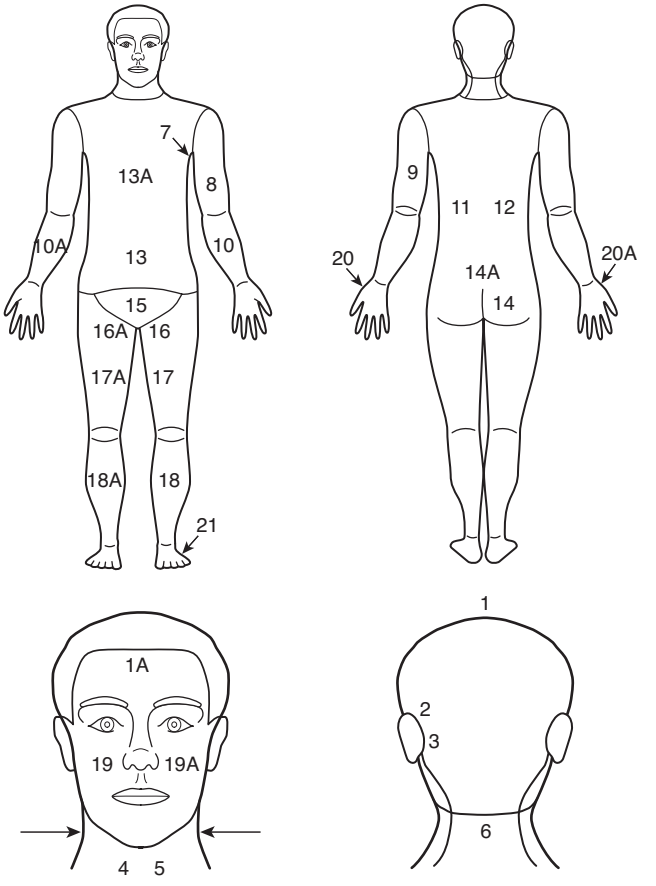

PAD locations

1:	scalp (SCA)	13A:	chest (C)
1A:	forehead (F)	14:	right buttock (RB)
2:	behind left ear upper (LED)	14A:	lower back (LB)
3:	behind left ear (LE)	15:	groin (GR)
4:	neck right (NED)	16:	crotch (LCR)
5:	neck left (NE)	16A:	crotch (RCR)
6:	nape (NA)	17:	left inner thigh (LIT)
7:	left armpit (LA)	17A:	right inner thigh (RIT)
8:	left inner upper arm (LIU)	18:	left inner shin (LIS)
9:	left outer upper arm (LOU)	18A:	right inner shin (RIS)
10:	left forearm (LFA)	19:	cheek (RM)
10A:	right forearm (RFA)	19A:	cheek (LM)
11:	middle back (MB)	20:	left hand (G)
12:	middle back dup. (MBD)	20A:	right hand (GD)
13:	abdomen (AB)	21:	foot (B)

FIGURE 8.44.5.2 Locations of Passive Adsorption Dosimeters (PADs) on Test Subjects.

(2) Duck squat, pivot right, pivot left, stand. Rotate orientation 90 degrees to wind stream between each repetition. Repeat exercise twice in each orientation for a total of 1 minute.
(3) Stand erect. With arms at sides, bend body to left and return, bend body forward and return, bend body to right and return. Rotate orientation 90 degrees to wind stream between each repetition. Repeat exercise twice in each orientation for a total of 1 minute.
(4) Stand erect. Extend arms overhead in the lateral direction, then bend elbows. Extend arms overhead in the frontal

Copyright National Fire Protection Association
Provided by IHS under license with NFPA
No reproduction or networking permitted without license from IHS
Not for Resale

direction, then bend elbows. Rotate orientation 90 degrees to wind stream between each repetition. Repeat exercise twice in each orientation for a total of 1 minute.

(5) Stand erect. Extend arms perpendicular to the sides of torso. Twist torso left and return, twist torso right and return. Rotate orientation 90 degrees to wind stream between each repetition. Repeat exercise twice in each orientation for a total of 1 minute.

(6) Stand erect. Reach arms across chest completely to opposite sides. Rotate orientation 90 degrees to wind stream between each repetition. Repeat exercise twice in each orientation for a total of 1 minute.

(7) Climb two steps of the ladder and touch the ceiling with one hand (use alternate hand each time). Climb down, squat, and touch the floor with both hands. Repeat exercise three times within 1 minute.

(8) Crawl in place for 1 minute. Rotate orientation 90 degrees to wind stream every 15 seconds.

(9) Sit on stool (facing wind) for 1 minute.

(10) Sit on stool (back to wind) for 1 minute.

8.44.5.8.2 Physical activities and rest periods must be performed in a chamber location that provides an unobstructed exposure of the protective ensemble to the required wind stream.

8.44.5.8.3 Each physical activity and rest cycle shall be 10 minutes. The cycle of exercise and rest shall be completed a total of three times, for a total chamber exposure of 30 minutes. Each exercise cycle shall consist of eight 1-minute activities followed by a 2-minute rest (sitting) period.

8.44.5.8.4 The test subject shall begin the first repetition of each activity facing the wind stream and shall rotate 90 degrees between repetitions until the time period for that exercise has ended.

8.44.5.8.5 All physical activities shall be a full range of motion and shall be performed at a moderate speed.

8.44.5.9 Decontamination and Doffing.

8.44.5.9.1 After completion of the 30-minute MIST exposure, the subjects shall move to a decontamination area, where they shall remain for at least 5 minutes. This area shall be well-ventilated to assist in off-gassing of the outside of the ensemble. At this point, all exposed ensemble surfaces, including such items as the respirator, boots, gloves, and helmets shall be washed with a strong soap solution. If the garment is designed for wet decontamination, it shall be washed with the soap solution as well.

8.44.5.9.2 The participant shall move to the Stage 1 undressing room, where all remaining items of clothing, except for underclothes, shall be doffed. The undress process shall not exceed 5 minutes.

8.44.5.9.3 The participant shall proceed to the Stage 2 undressing room, where the PADs shall be removed.

8.44.5.9.4 Each PAD shall be backed with aluminum foil, placed in individual sealed glass vials with a nonadsorbent lid liner, and stored in a refrigerated environment (4°C) and shall not be removed from the environment for more than 15 minutes before processing.

8.44.6 Analysis.

8.44.6.1* The sensitivity of the analytical technique shall provide for a detection limit of 3 mg·min/m^3 (approximately 30 ng MS per PAD). The analytical technique shall be linear up to at least a dose of 2000 mg·min/m^3, with a coefficient of variation on replicate spiked dosimeter samples of less than 7 percent.

8.44.6.2 Processing of the PAD samples shall be performed within 24 hours of exposure. Where liquid extraction of the PAD samples is performed, samples shall be permitted to be stored at 4°C for up to 7 days before analysis.

8.44.6.3 Each lot of PADs used for testing shall be calibrated to determine the uptake rate. PADs shall be calibrated by placing at least four PADs from each representative lot within the chamber for 30 minutes, +5 minutes/–0 minutes during the MIST test. The chamber PAD exposure time shall be set such that the PAD dosage does not exceed the linear range of the analytical technique. The average of the chamber vapor concentration and the actual time of exposure shall be used to determine the uptake rate from the following equation:

$$m = uACt$$

where:

m = the total mass measured on the PAD (mg)
u = uptake rate (cm^3/min)
A = average active area of the PAD (cm^2)
Ct = chamber vapor dosage (mg·min/cm^3)

8.44.6.4 For the test results to be considered valid for a given ensemble, no more than one PAD out of the four replicate PADs for any particular body region shall be permitted to be lost to analysis over the course of the four test subjects.

8.44.7 Calculations.

8.44.7.1 The arithmetic mean for the calibrated uptake rate shall be used to calculate the dosage measured by each PAD (Ct_{inside}) from the same equation based on the measured mass taken up by the PAD. Finally, the protection factor at each PAD location i inside the ensemble shall be calculated using the following equation, where $Ct_{outside}$ shall be determined from the measured chamber vapor dosage of the individual trial over the entire exposure, and the value for $Ct_{outside}$ shall be the average of the chamber MS concentration readings taken during the course of the test subject exposure period:

$$PF_i = \frac{Ct_{outside}}{Ct_{inside}}$$

8.44.7.2 All results for each PAD location shall be expressed in terms of the local physiological protective dosage factor (PPDF) value and shall be calculated according to the following equation:

$$local\ PPDF_i = \frac{OSED_i}{25} PF_i$$

8.44.7.2.1* The site specific onset of symptoms exposure dosages (OSED) for each PAD will be based on ECt_{10} values for mustard blistering/ulceration according to Table 8.44.7.2.1.

8.44.7.2.2 The average local physiological protective dosage factor (PPDF) values at each PAD location for all specimens tested shall be calculated.

8.44.7.3 A systemic physiological protective dosage factor (PPDF) shall also be calculated from the PAD data. The systemic protection analysis shall use the systemic weighting body region hazard analysis values from the *Technical Cooperation Program, Chemical Biological Defence Technical Panel 11 on Low Burden, Integrated Protective Clothing*, "Final Report: Development of a Standard Vapour Systems Test to Assess the Protection Capability of

Copyright National Fire Protection Association
Provided by IHS under license with NFPA
No reproduction or networking permitted without license from IHS
Not for Resale

NBC Individual Protective Ensembles," Appendix G, Defence Research Establishment Suffield Report, Assessment of the U.S. Army Chemical and Biological Defense Command Report 1: Technical Assessment of the Man-In-Simulant Test (MIST) Program," National Research Council Report, to calculate the systemic physiological protective dosage factor for each ensemble test ($PPDF_{sys}$).

Table 8.44.7.2.1 Site Specific Onset of Symptoms Exposure Dosage (OSED) by PAD Location

Body Region	PAD Locations*	OSED ($mg \cdot min \cdot m^{-3}$)
Head, neck	1, 1A, 2, 3, 4, 5, 6, 19, 19A	100
Torso, buttocks (excluding crotch)	11, 12, 13, 13A, 14, 14A, 15	50
Arm, hand	7, 8, 9, 10, 10A, 20, 20A	50
Leg, foot	17, 17A, 18, 18A, 21	100
Crotch	16, 16A	25

*See Figure 8.44.5.2.

8.44.7.3.1 The $PPDF_{sys}$ for each specimen is calculated as follows, where each of the terms is calculated according to Table 8.44.7.3.1:

$$PPDF_{sys} = \frac{\sum_i \frac{dz_i}{ED_{50i}}}{\sum_i \frac{dz_i}{ED_{50i} PF_i}}$$

8.44.7.3.2 The average systemic physiological protective dosage factor $(PPDF_{sys})$ for all specimens tested shall be calculated and reported.

8.44.8 Report.

8.44.8.1 The average local physiological protective dosage factor ($PPDF_i$) value for each PAD location shall be recorded and reported.

8.44.8.2 The systemic physiological protective dosage factor ($PPDF_{sys}$) value for each specimen and the average systemic physiological protective dosage factor ($PPDF_{sys}$) value for the ensemble tested shall be recorded and reported.

Table 8.44.7.3.1 ED_{50i} Values by PAD and Body Location

Body Region *i* for BRHA Model	PADs Mapped to This Region (Average Dosage from Each PAD, and Then Calculate PF_i)*	Area of Body Region (dz_i, cm^2)	ED_{50i} for Severe Effects (VX) for Body Region (mg/individual)
Scalp	1,1A	350	0.76
Ears	2,3	50	0.46
Face, cheeks, and neck	4,5,19,19A	300	0.48
Chin and neck	4,5	200	0.36
Nape	6	100	1.72
Abdomen	13A	2858	2.23
Back	11,12,14A	2540	2.65
Axillae	7	200	2.07
Upper arm medial	8	488	6.57
Upper arm lateral	9	706	2.8
Elbow fold	8,9,10,10A	50	2.09
Elbow	8,9,10,10A	50	2.25
Forearm extensor	10,10A	487	2.8
Forearm flexor	10,10A	706	6.57
Hands dorsum	20,20A	200	2.91
Hands palmar	20,20A	200	9.24
Buttocks	14	953	4.26
Groin	13,15	300	1.22
Scrotum	16,16A	200	0.11
Thigh anterior	17,17A	2845	6.57
Thigh posterior	17,17A	1422	4.26
Knee	17,17A,18,18A	200	7.14
Popliteal space (back of knees)	17,17A,18,18A	100	2.09
Shins	18,18A	1897	2.8
Calves	18,18A	948	6.57
Feet dorsum	21	500	6.6
Feet plantar	21	300	7.14

*See Figure 8.44.5.2.

Copyright National Fire Protection Association
Provided by IHS under license with NFPA
No reproduction or networking permitted without license from IHS
Not for Resale

8.44.9 Interpretation. The average local physiological protective dosage factor ($PPDF_i$) values at each PAD location and the systemic physiological protective dosage factor ($PPDF_{sys}$) value for each specimen shall be used to determine pass or fail performance.

8.45 Chemical Permeation Resistance Test.

8.45.1 Application.

8.45.1.1 This method shall apply to the CBRN barrier layer and seams used in elements and ensembles for CBRN terrorism agent protection.

8.45.1.2 Specific requirements for testing the garment, hood, and bootie CBRN barrier layer shall be as specified in 8.45.7.

8.45.1.3 Specific requirements for testing the garment, hood, and bootie CBRN barrier layer seams shall be as specified in 8.45.8.

8.45.1.4 Specific requirements for testing the glove CBRN barrier layer and seams shall be as specified in 8.45.9.

8.45.1.5 Specific requirements for testing footwear CBRN barrier layer shall be as specified in 8.45.10.

8.45.2 Sample Preparation. Specimens shall then be conditioned at a temperature of 21°C, ±3°C (70°F, ±5°F) and at a relative humidity of 80 percent, ±5 percent, for at least 4 hours prior to permeation testing.

8.45.3 Specimens.

8.45.3.1 A minimum of three specimens of each material shall be tested against each chemical.

8.45.3.2 The CBRN barrier layers shall be tested for chemical permeation resistance.

8.45.3.3 The CBRN barrier layer plus any outer shell or other composite layers normally worn over the CBRN barrier layer shall be permitted to be tested for chemical permeation resistance. Separable layers worn underneath the CBR barrier layer shall not be tested with the CBR layer.

8.45.3.4 If the CBR barrier layer is the outermost layer in the composite, then it shall be tested for chemical permeation resistance without additional layers on top.

8.45.4 Procedures.

8.45.4.1 Specimens shall be tested for permeation resistance for not less than 60 minutes against the chemicals specified in 8.45.4.2 and 8.45.4.3 in accordance with ASTM F 739, *Standard Test Method for Resistance of Protective Clothing Materials to Permeation by Liquids or Gases Under Conditions of Continuous Contact,* with the following modifications:

(1) The test cells shall be designed to accommodate the introduction of liquid chemicals in a safe manner.
(2) Testing shall be conducted in an open-loop configuration for the collection of permeant.
(3) The collection media shall be filtered air flowed through the bottom of the test cell at a rate of 1 lpm, ±0.1 lpm with a relative humidity of 80 percent, ±5 percent.
(4) Analytical methods used shall be sensitive to concentrations of at least one order of magnitude lower than the required end points.
(5) Where cumulative permeation end points are not specified in this standard, a permeation rate of 0.1 μg/cm^2/minute, as defined by ASTM F 739, *Standard Test Method for Resistance of Protective Clothing Materials to Permeation by Liquids or Gases Under Conditions of Continuous Contact,* shall be used.

8.45.4.2 The following liquid chemicals shall be tested:

(1) Liquid chemical warfare agents as follows:
   (a) Distilled sulfur mustard [HD; bis (2-chloroethyl) sulfide], 505-60-2; at 32°C, ±1°C (90°F, ±2°F)
   (b) Soman (GD; o-pinacolyl methylphosphonofluoridate), 96-64-0; at 32°C, ±1°C (90°F, ±2°F)
(2) Liquid toxic industrial chemicals as follows:
   (a) Acrolein (allyl aldehyde), 107-02-8; at 32°C, ±1°C (90°F, ±2°F)
   (b) Acrylonitrile (VCN, cyanoethylene), 107-13-1; at 32°C, ±1°C (90°F, ±2°F)
   (c) Dimethyl sulfate (DMS, sulfuric acid dimethyl ester), 77-78-1; at 32°C, ±1°C (90°F, ±2°F)

8.45.4.3 The following gases shall be tested:

(1) Ammonia (NH_3, 7664-41-7); at 32°C, ±1°C (90°F, ±2°F)
(2) Chlorine (Cl_2, 7782-50-5); at 32°C, ±1°C (90°F, ±2°F)

8.45.4.4 Permeation Test Configuration.

8.45.4.4.1 For permeation tests involving gases, the gas concentration shall be 40 ppm, +5/–0 ppm.

8.45.4.4.2 For permeation tests involving liquids, the liquid concentration density shall be 10 g/m^2, +1/–0 g/m^2, and the cell shall be assembled in closed-top configuration. The liquid drops shall be uniformly distributed over the test area of the sample surface, applied as nominal 1 μl drops. Where a seam, closure, or fixture is included, at least one drop shall be applied to each critical juncture, such as the seam edge.

8.45.4.4.3 For the liquid chemicals specified in 8.45.4.2, the test cell shall be assembled in the open-top configuration with 0.3 lpm, ±0.03 lpm of filtered air with a relative humidity of 80 percent, ±5 percent flowing through the top of the cell. With the open-top configuration, the test cell washer shall be allowed to be sealed by an impermeable nonreactive sealant.

8.45.5 Report.

8.45.5.1 Permeation Testing of Chemical Warfare Agents.

8.45.5.1.1 The cumulative permeation in 1 hour shall be recorded and reported in micrograms per square centimeter (μg/cm^2) for each specimen.

8.45.5.1.2 The average cumulative permeation in 1 hour for all specimens shall be calculated, recorded, and reported.

8.45.5.1.3 The report shall include the pass or fail results for each chemical tested.

8.45.5.2 Permeation Testing of Liquid and Gaseous Toxic Industrial Chemicals.

8.45.5.2.1 The normalized breakthrough time shall be recorded and reported in minutes for each specimen.

8.45.5.2.2 The average normalized breakthrough time shall also be calculated, recorded, and reported.

8.45.6 Interpretation.

8.45.6.1 For permeation testing of chemical warfare agents specified in 8.45.4.2(1), the average cumulative permeation shall be used to determine pass or fail performance.

Copyright National Fire Protection Association
Provided by IHS under license with NFPA
No reproduction or networking permitted without license from IHS
Not for Resale

8.45.6.2 For permeation testing of liquid and gaseous toxic industrial chemicals specified in 8.45.4.2(2), the average normalized breakthrough time shall be used to determine pass or fail performance.

8.45.7 Specific Requirements for Testing Garment, Hood, and Bootie Materials.

8.45.7.1 Samples for conditioning shall be at least 380 mm (15 in.) square and shall consist of all layers of the composite arranged in the order used in the construction of the garment, hood, or bootie.

8.45.7.2 Composite samples prepared as described in 8.45.7.1 shall be tested after being twice subjected to the following conditioning.

(1) Specimens shall first be subjected to the procedure specified in 8.1.9.
(2) Specimens shall then be conditioned as specified in 8.1.2.
(3) Specimens shall then be conditioned as specified in 8.1.8.

8.45.7.3 The composite sample, including the CBRN barrier layer, that was conditioned in 8.45.7.2 shall be trimmed to a sample size of 300 mm × 280 mm (12 in. × 11 in.). The trimmed composite samples shall be subject to flexing conditioning as specified in 8.1.10 with the 280 mm (11 in.) direction parallel with the compression action of the machine. The trimmed samples shall be mounted such that the outer layer is visible with all layers in their normal "as worn" orientation.

8.45.7.4 Following flexing, samples of the CBRN barrier layer shall be removed from the flexed, trimmed composite sample, cut to the dimensions specified in 8.45.7.3 with the long dimension of the sample parallel to the 280 mm (11 in.) dimension.

8.45.7.5 The layers in the flexed, trimmed composite sample adjacent to the CBRN barrier layer shall be retained for use as the abradants.

8.45.7.6 The CBRN barrier layer samples prepared as specified as 8.45.7.4 and the other samples retained as specified in 8.45.7.5 shall be subjected to abrasion as specified 8.1.11.

8.45.7.7 Following abrading, the permeation test specimen shall be taken from the center of the abraded sample so that the center of the permeation test and the center of the abraded sample coincide.

8.45.7.8 Use of exterior layers with the CBRN barrier layer specimen shall be permitted. Exterior layer specimens shall be removed from the composite samples that are conditioned as specified in 8.45.7.2.

8.45.7.9 The specimens shall be oriented in the permeation test cell with the exterior surfaces facing the challenge chemical.

8.45.7.10 Specimens shall be tested for permeation resistance as specified in 8.45.2 through 8.45.6.

8.45.8 Specific Requirements for Testing Garment, Hood, and Bootie Seams.

8.45.8.1 Samples for conditioning shall be at least 380 mm (15 in.) square and shall consist of all layers of the composite arranged in the order used in the construction of the garment, hood, or bootie. The CBRN barrier layer shall be constructed with one or more parallel seams that shall extend across the entire 380 mm (15 in.) width of the specimen. Seams shall be constructed in the CBRN barrier layer no closer than 75 mm (3 in.) to one another. The multilayer composite shall be stitched around the entire periphery.

8.45.8.2 Composite samples prepared as described in 8.45.7.1 shall be tested after being twice subjected to the following conditioning.

(1) Specimens shall first be subjected to the procedure specified in 8.1.9.
(2) Specimens shall then be conditioned as specified in 8.1.2.
(3) Specimens shall then be conditioned as specified in 8.1.8.

8.45.8.3 The composite sample, including CBRN barrier layer seam, that was conditioned in 8.45.8.2 shall be trimmed to a sample size of 300 mm × 280 mm (12 in. × 11 in.) with the seam parallel to the 300 mm (12 in.) direction. The trimmed composite samples shall be subject to flexing conditioning as specified in 8.1.10 with the 280 mm (11 in.) direction parallel with the compression action of the machine. The trimmed samples shall be mounted such that outer layer is visible with all layers in their normal "as worn" orientation.

8.45.8.4 Specimens for permeation testing shall be cut from CBRN barrier layer of the flexed, trimmed sample such that the seam bisects the specimen.

8.45.8.5 Use of exterior layers with the CBRN barrier layer specimen shall be permitted. Exterior layer specimens shall be removed from the composite samples that are conditioned as specified in 8.45.8.2.

8.45.8.6 The specimens shall be oriented in the permeation test cell with the exterior surfaces facing the challenge chemical.

8.45.8.7 Specimens shall be tested for permeation resistance as specified in 8.45.2 through 8.45.6.

8.45.9 Specific Requirements for Testing Glove Materials and Seams.

8.45.9.1 This test shall apply to all types of glove configurations.

8.45.9.2 Samples for conditioning shall be whole gloves.

8.45.9.3 Glove samples shall be subjected to the following sequence a total of two times prior to permeation testing.

(1) Specimens shall first be subjected to the procedure specified in 8.1.9.
(2) Specimens shall then be conditioned as specified in 8.1.2.
(3) Specimens shall then be conditioned as specified in 8.1.8.

8.45.9.4 Following the conditioning specified in 8.45.9.3, conditioned gloves shall be donned by a test subject and subjected to flexing by the test subject clenching his or her hands into a fist a total of 3000 times over a period not greater than 60 minutes. Test subjects shall be selected so that their hand dimensions are as close as possible to the middle of the range for hand length and hand circumference as specified in 6.1.3.4 and A.6.1.3.6.

8.45.9.5 Following the flexing in 8.45.9.4, specimens for permeation resistance testing shall be taken from the CBRN barrier layer of the flexed glove. Where the CBRN layer includes seams, specimens shall include seams that bisect the specimens.

8.45.9.6 Use of exterior layers with the CBRN barrier layer specimen shall be permitted. Exterior layer specimens shall be removed from the composite samples that are conditioned as specified in 8.45.9.2.

8.45.9.7 Specimens shall be tested for permeation resistance as specified in 8.45.2 through 8.45.6.

Copyright National Fire Protection Association
Provided by IHS under license with NFPA
No reproduction or networking permitted without license from IHS
Not for Resale

8.45.10 Specific Requirements for Testing Footwear Materials.

8.45.10.1 This test shall not apply to footwear configurations that include booties that are subjected to the procedures in 8.45.7 and 8.45.8.

8.45.10.2 Samples for conditioning shall be whole footwear items.

8.45.10.3 Footwear samples shall be subjected to the following sequence a total of two times prior to permeation testing.

(1) Samples shall first be conditioned as specified in 8.1.8.
(2) Samples shall then be conditioned by flexing 500,000 cycles in accordance with Appendix B of FIA 1209, *Whole Shoe Flex*.

8.45.10.4 Following flexing, samples shall be taken in areas from the footwear upper at the footwear quarter and vamp areas, cut to the dimensions specified in 8.45.7.3.

8.45.10.5 The cut samples shall then be conditioned by abrading as specified in 8.1.11 using silicon carbide, ultrafine, 600 grit sandpaper as the abradant in lieu of other specified layers.

8.45.10.6 Following abrading, the permeation test specimen shall be taken from the center of the abraded sample so that the center of the permeation test and the center of the abraded sample coincide.

8.45.10.7 Specimens shall be tested for permeation resistance as specified in 8.45.2 through 8.45.6.

8.46 Puncture Propagation Tear Resistance Test.

8.46.1 Application. This test shall apply to the CBRN barrier layer.

8.46.2 Sample Preparation.

8.46.2.1 Samples shall be at least 0.5 m (0.5 yd) squares of material.

8.46.2.2 Samples shall be conditioned as specified in 8.1.3.

8.46.3 Specimens.

8.46.3.1 Specimens shall be the size specified in ASTM D 2582, *Standard Test Method for Puncture Propagation Tear Resistance of Plastic Film and Thin Sheeting*.

8.46.3.2 A minimum of five specimens in each of the warp, machine or course, and filling, cross-machine or wales, directions shall be tested.

8.46.3.3 If the material is isotropic, then 10 specimens shall be tested.

8.46.4 Procedure. Specimens shall be tested in accordance with ASTM D 2582, *Standard Test Method for Puncture Propagation Tear Resistance of Plastic Film and Thin Sheeting*.

8.46.5 Report.

8.46.5.1 The puncture propagation tear resistance of each specimen shall be recorded and reported to the nearest 1 N (0.1 lbf).

8.46.5.2 An average puncture propagation tear resistance shall be calculated for warp and filling directions. The average puncture propagation tear resistance calculations shall be recorded and reported.

8.46.6 Interpretation.

8.46.6.1 Pass or fail performance shall be based on the average puncture propagation tear resistance in the warp and filling directions.

8.46.6.2 Failure in any one direction constitutes failure for the material.

8.47 Cold Temperature Performance Test.

8.47.1 Application. This test method shall apply to the CBRN barrier layer.

8.47.2 Sample Preparation.

8.47.2.1 Samples for conditioning shall be at least 50 cm (18 in.) squares of material.

8.47.2.2 Samples shall be conditioned a specified in 8.1.3.

8.47.3 Specimens.

8.47.3.1 Specimens shall be the size specified in ASTM D 747, *Standard Test Method for Apparent Bending Modulus of Plastics by Means of a Cantilever Beam*.

8.47.3.2 A minimum of five specimens consisting of all layers in each of the warp, machine or course, and filling, cross-machine or wales, directions shall be tested.

8.47.3.3 If the material is isotropic, then 10 specimens shall be tested.

8.47.4 Preparation.

8.47.4.1 Samples for conditioning shall be at least 1 m (1 yd) squares of material.

8.47.4.2 Samples shall be conditioned as specified in 8.1.3.

8.47.5 Procedure. Specimens shall be tested in accordance with ASTM D 747, *Standard Test Method for Apparent Bending Modulus of Plastics by Means of a Cantilever Beam*, with the following modifications:

(1) The test temperature shall be –25°C (–13°F).
(2) The bending moment shall be that applied when the specimen is bent to a 60 degree angular deflection and shall be calculated in inch-pounds as follows:
Bending moment = [(load scale reading) × (moment weight)] × 100
Bending moment (N) = Bending moment (in.-lbf) × 0.113

8.47.6 Report. Cold temperature performance results shall be recorded and reported as the average for each material direction.

8.47.7 Interpretation. Failure of the material in any direction shall constitute failing performance.

8.48 Abrasion Resistance Test 4.

8.48.1 Application. This test method shall apply to the CBRN barrier layer where configured as an exterior layer in protective footwear.

8.48.2 Sample Preparation.

8.48.2.1 Samples for conditioning shall be at least 50 cm (18 in.) squares of material.

8.48.2.2 Samples shall be conditioned a specified in 8.1.3.

8.48.3 Specimens.

8.48.3.1 Specimens shall be the size specified in ASTM D 3884, *Standard Test Method for Abrasion Resistance of Textile Fabrics (Rotary Platform, Double-Head Method)*.

8.48.3.2 A minimum of five specimens shall be tested.

--`,,```,,,,````-`-`,,`,,`,`,,`---

Copyright National Fire Protection Association
Provided by IHS under license with NFPA
No reproduction or networking permitted without license from IHS
Not for Resale

8.48.4 Procedure. Specimens shall be tested in accordance with ASTM D 3884, *Standard Test Method for Abrasion Resistance of Textile Fabrics (Rotary Platform, Double-Head Method)*, with the following modifications:

(1) The H-18 Calibrase wheels shall be used with a 1000 g load.
(2) The abrasion shall be continued until a hole, wear-through, or rupture in the film portion of the material is observed.

8.48.5 Report. The number of cycles required for the formation of a hole, wear-through, or rupture in the film portion of the material shall be recorded and reported.

8.48.6 Interpretation. The number of cycles required for the formation of a hole, wear-through, or rupture in the film portion of the material shall be used to determine pass or fail performance.

Annex A Explanatory Material

Annex A is not a part of the requirements of this NFPA document but is included for informational purposes only. This annex contains explanatory material, numbered to correspond with the applicable text paragraphs.

A.1.1 The majority of performance criteria in this standard are based on the U.S. Fire Administration study, FA 136, "Protective Clothing and Equipment Needs of Emergency Responders for Urban Search and Rescue Missions." That report documented the protective clothing and equipment needs for emergency responders engaged in technical rescue activities. Input was obtained from an emergency responder user requirements committee and resulted in proposed criteria based on a needs and risk analysis. The report contains survey results and test data for a number of materials.

A.1.1.3 Users are cautioned that exposure of ensembles to chemical, biological, and radiological terrorism agents should require disposal, particularly if the effectiveness of decontamination cannot be assessed.

A.1.1.6 Because this standard does not specify or establish requirements for visibility enhancement, the authority having jurisdiction should conduct a risk assessment and determine the level of visibility required in an ensemble for technical rescue incidents based on the anticipated use of such garments.

Where the authority having jurisdiction anticipates the presence of visibility hazards, such as proximity to traffic, moving machinery, or heavy equipment in operation, the authority having jurisdiction should be aware that the appropriate high-visibility clothing specified in ANSI/ISEA 107, *American National Standard for High Visibility Safety Apparel and Headwear*, is the type of garments that should be used.

A.1.1.9 Emergency services organizations are cautioned that accessories are not a part of the certified product but could be attached to the certified product by a means not engineered, manufactured, or authorized by the manufacturer.

Emergency services organizations are cautioned that if the accessory or its means of attachment causes the structural integrity of the certified product to be compromised, the certified product might not comply with the standard for which it was designed, manufactured, and marketed. Additionally, if the accessory or its attachment means are not designed and manufactured from materials suitable for the hazardous environments of emergency incidents, the failure of the accessory or its attachment means could cause injury to the emergency responder.

Because the aftermarket for certified product accessories is so broad, emergency services organizations are advised to contact both the manufacturer of the accessory and the manufacturer of the certified product and verify that the accessory and its means of attachment are suitable for use in the intended emergency response environment. Emergency services organizations should seek and receive written documentation from both the accessory manufacturer and the manufacturer of the certified product to validate the following information:

(1) The accessory for a certified product and its attachment method will not degrade the designed protection or performance of the certified product below the requirements of the product standard to which it was designed, manufactured, tested, and certified.
(2) The accessory, when properly attached to the certified product, should not interfere with the operation or function of the certified product or with the operation or function of any of the certified product's component parts.

Emergency services organizations are also cautioned that if the means of attachment of the accessory fail to safely and securely attach the accessory to the certified product, the accessory can inadvertently dislodge from the certified product, creating a risk to the wearer or other personnel in the vicinity.

A.1.2 This standard is not designed to be utilized as a purchase specification. It is prepared, as far as practicable, with regard to required performance, avoiding restriction of design wherever possible. Purchasers should specify departmental requirements for such items as color, markings, closures, pockets, and visibility markings. Tests specified in this standard should not be deemed as defining or establishing performance levels for protection from all technical rescue environments or in all CBRN terrorism incident environments, where the CBRN terrorism agent protection is applied to ensembles.

A.1.2.1 The authority having jurisdiction should perform a risk assessment to identify the hazards present and to determine the suitability of protective ensembles specified by this standard. For each of the activities described as technical rescue incidents, the authority having jurisdiction should determine if the protection provided by compliant technical rescue protective ensembles meeting this standard is commensurate with the level of protection needed as deemed by the hazards present. For example, in an automobile extrication, the decision for using technical rescue protective ensembles versus structural fire fighting protective ensembles can depend on the level of fire risk at the incident.

A.1.2.2.1 Specific design and performance criteria are established in this standard to demonstrate limited protection against physical and thermal hazards to permit emergency services personnel to provide response and limited rescue.

A.1.2.2.2 Specific design and performance criteria are established in this standard to demonstrate limited protection against physical, thermal, liquid splash, and body fluid–borne pathogen hazards to permit emergency services personnel to provide response, limited rescue, and limited recovery.

A.1.2.2.3 Specific design and performance criteria are established in this standard to demonstrate limited protection against CBRN terrorism agents to permit emergency services personnel to escape and provide limited rescue while escaping the contaminated environment when they encounter terrorism incidents.

Copyright National Fire Protection Association
Provided by IHS under license with NFPA
No reproduction or networking permitted without license from IHS
Not for Resale

The criteria are not intended to provide for re-entry of emergency services personnel into the contaminated environment. Radiological and nuclear protection is limited to the hazards associated with radiological particulates. This standard does not establish criteria for protection from ionizing radiation. Moreover, this standard does not establish criteria for protection from all chemical warfare agents, protection from all biological agents, protection from all weapons of mass destruction, or protection from all toxic industrial chemicals.

While separate requirements are specified for technical rescue protective elements, the CBRN requirements apply to ensembles only. Individual elements cannot be separately certified to the CBRN criteria in this standard. Only complete ensembles in which all necessary elements are specified to achieve the stated performance can be certified to the CBRN criteria in this standard.

A.1.2.3 The testing requirements in Chapter 8 of this standard are not intended to establish the limitations of the working environment for technical rescue but are intended to establish material performance.

Users should be advised that if unusual conditions prevail, if there are signs of abuse or mutilation of the protective ensemble or any element or component thereof, or if modifications or replacements are made or accessories are added without authorization of the protective ensemble element manufacturer, the margin of protection could be reduced.

Users should be advised that the protective properties in new technical rescue protective ensemble elements, as required by this standard, can diminish as the product is worn and ages.

A.1.3.5 See A.1.1.9.

A.1.3.6 Nothing in this standard is intended to imply that fire service responders cannot engage in urban technical rescue incidents while wearing protective clothing and equipment meeting NFPA 1971, *Standard on Protective Ensembles for Structural Fire Fighting and Proximity Fire Fighting*.

Organizations responsible for fire-fighting applications should use protective clothing and equipment specifically designed for those activities. Applicable standards include the following:

(1) NFPA 1971, *Standard on Protective Ensembles for Structural Fire Fighting and Proximity Fire Fighting*
(2) NFPA 1977, *Standard on Protective Clothing and Equipment for Wildland Fire Fighting*

Organizations responsible for hazardous chemical emergencies should use protective clothing and equipment specifically designed for those activities. Applicable standards include the following:

(1) NFPA 1991, *Standard on Vapor-Protective Ensembles for Hazardous Materials Emergencies*
(2) NFPA 1992, *Standard on Liquid Splash-Protective Ensembles and Clothing for Hazardous Materials Emergencies*

Organizations responsible for emergency medical operations should use protective clothing and equipment specifically designed for those activities. The applicable standard is NFPA 1999, *Standard on Protective Clothing for Emergency Medical Operations*.

A.1.3.9 Emergency services organizations are cautioned that accessories are not part of the certified product but could be attached to a certified product by a means not engineered, manufactured, or authorized by the certified product manufacturer.

Emergency services organizations are cautioned that if an accessory or its means of attachment causes the structural integrity of the certified product to be compromised, the certified product might not be compliant with the standard to which it was originally certified as compliant. Additionally, if an accessory or the accessory's means of attachment are not designed and manufactured from suitable materials for the hazardous environments of emergency incidents, the failure of the accessory or its attachment means could cause injury to the emergency responder.

Because the aftermarket for accessories for certified products is so broad, emergency response organizations are advised to contact both the accessory manufacturer and the manufacturer of the certified product and verify that the accessory and its means of attachment are suitable for use in the intended emergency response environment. Emergency response organizations should seek and receive written documentation from both the accessory manufacturer and the manufacturer of the certified product to validate the following information:

(1) The accessory for a certified product and the means of attachment will not degrade the designed protection or performance of the certified product below the requirements of this standard to which it was designed, manufactured, tested, and certified.
(2) The accessory, when properly attached to the certified product, will not interfere with form, fit, or function of any of the certified product or with the form, fit, and function of any of the certified product' s component parts.

Emergency services organizations are also cautioned that if the means of attachment for accessories fail to safely and securely attach the accessory to a certified product, the accessory can inadvertently be dislodged from the certified product, creating a risk to the wearer or other emergency response personnel in the vicinity.

A.1.4 Metric units are used throughout, with U.S. equivalents provided in parentheses.

A.3.2.1 Approved. The National Fire Protection Association does not approve, inspect, or certify any installations, procedures, equipment, or materials; nor does it approve or evaluate testing laboratories. In determining the acceptability of installations, procedures, equipment, or materials, the authority having jurisdiction may base acceptance on compliance with NFPA or other appropriate standards. In the absence of such standards, said authority may require evidence of proper installation, procedure, or use. The authority having jurisdiction may also refer to the listings or labeling practices of an organization that is concerned with product evaluations and is thus in a position to determine compliance with appropriate standards for the current production of listed items.

A.3.2.2 Authority Having Jurisdiction. The phrase "authority having jurisdiction," or its acronym AHJ, is used in NFPA documents in a broad manner, since jurisdictions and approval agencies vary, as do their responsibilities. Where public safety is primary, the authority having jurisdiction may be a federal, state, local, or other regional department or individual such as a fire chief; fire marshal; chief of a fire prevention bureau, labor department, or health department; building official; electrical inspector; or others having statutory authority. For insurance purposes, an insurance inspection department, rating bureau, or other insurance company representative may be the authority having jurisdiction. In many circumstances,

Copyright National Fire Protection Association
Provided by IHS under license with NFPA
No reproduction or networking permitted without license from IHS
Not for Resale

the property owner or his or her designated agent assumes the role of the authority having jurisdiction; at government installations, the commanding officer or departmental official may be the authority having jurisdiction.

A.3.2.4 Listed. The means for identifying listed equipment may vary for each organization concerned with product evaluation; some organizations do not recognize equipment as listed unless it is also labeled. The authority having jurisdiction should utilize the system employed by the listing organization to identify a listed product.

A.3.3.10 CBRN Barrier Layer. While it is recognized that the entire composite will affect the performance of the ensemble clothing in preventing the penetration of CBRN agents, the identification of the CBRN barrier material is intended to assist with the application of specific ensemble and element tests in this standard.

A.3.3.18 CBRN Terrorism Agents. Chemical terrorism agents include solid, liquid, and gaseous chemical warfare agents and toxic industrial chemicals. Chemical warfare agents include, but are not limited to, GB (Sarin), GD (Soman), HD (sulfur mustard), VX, and specific toxic industrial chemicals. Many toxic industrial chemicals — for example, chlorine and ammonia — are identified as potential chemical terrorism agents because of their potential availability and the degree of injury they could potentially inflict.

Biological agents are bacteria, viruses, or the toxins derived from biological material. The CBRN ensemble protects against biological particles dispersed as aerosols and liquid-borne pathogens. Airborne biological agents could be dispersed in the form of liquid aerosols or solid aerosols, for example, a powder of bacterial spores. Liquid-borne pathogens could be encountered during a terrorism incident as a result of deliberate dispersal or from body fluids released by victims of other weapons, such as explosives and firearms.

CBRN ensembles protect from radiological particulates dispersed as aerosols. The protection is defined for blocking or filtering airborne particulate matter and liquid and solid aerosols, not for radiological gases or vapors. Airborne particulates have the ability to emit alpha and beta particles and ionizing radiation from the decay of unstable isotopes. *(See also 3.3.87.)*

A.3.3.58 Interface Component(s). Interface components are evaluated and tested individually or are evaluated and tested as a part of the protective element.

A.3.3.74 Product Label. The product label is not the certification organization's label, symbol, or identifying mark; however, the certification organization's label, symbol, or identifying mark can be attached to it or be part of the product label.

A.3.3.87 Radiological Particulate Terrorism Agents. This standard provides only partial protection from certain radiation sources. By their nature, these ensembles provide protection from alpha particles, and the element materials and distance will significantly attenuate beta particles. These ensembles do not provide any protection from ionizing radiation, such as gamma rays and X-rays, other than to keep the actual radiological particulate from direct skin contact.

A.3.3.89 Rescue and Recovery Technical Rescue Protective Ensemble. A technical rescue protective ensemble includes, but is not limited to, garments, helmets, goggles, gloves, and footwear.

A.4.1.4 The NFPA, from time to time, has received complaints that certain items of fire and emergency services protective clothing or protective equipment could be carrying labels falsely identifying those items as compliant with an NFPA standard. The requirement for placing the certification organization's mark on or next to the product label is to help ensure that the purchaser can readily determine compliance of the product through independent third-party certification.

A.4.2.1 The certification organization should have sufficient breadth of interest and activity so that the loss or award of a specific business contract would not be a determining factor in the financial well-being of the agency.

A.4.2.5 The contractual provisions covering a certification program should contain clauses advising the manufacturer that if requirements change, the product should be brought into compliance with the new requirements by a stated effective date through a compliance review program involving all currently listed products.

Without those clauses, certifiers would not be able to move quickly to protect their names, marks, or reputations. A product safety certification program would be deficient without such contractual provisions and the administrative means to back them up.

A.4.2.6 Investigative procedures are important elements of an effective and meaningful product safety certification program. A preliminary review should be carried out on products submitted to the agency before any major testing is undertaken.

A.4.2.7.1 For further information and guidance on recall programs, see 21 CFR 7, Subpart C.

A.4.2.9 Such inspections should include, in most instances, witnessing of production tests. With certain products, the certification organization inspectors should select samples from the production line and submit them to the main laboratory for countercheck testing. With other products, it can be desirable to purchase samples in the open market for test purposes.

A.4.5 ISO 9000, *Quality Management Systems — Fundamentals and Vocabulary*, defines quality terms and concepts. It gives an overview of the content and use of the ISO 9000 series. ISO 9001, *Quality Management Systems — Requirements*, is used to register the manufacturer's quality system processes. It prescribes quality system requirements for design, development, production, installation, and servicing.

A.4.5.4 For example, this situation exists when the product is wholly manufactured and assembled by an entity, or entities, for another, separate entity that puts its name and label on the product, frequently called "private labeling," and markets and sells the product as its own product.

A.4.5.5 Subcontractors should be considered to be, but not be limited to, a person or persons, or a company, firm, corporation, partnership, or other organization having an agreement with or under contract with the compliant product manufacturer to supply or assemble the compliant product or portions of the compliant product.

A.4.6.1 ISO Guide 27, *Guidelines for corrective action to be taken by a certification body in the event of misuse of its mark of conformity,* is a component of accreditation of certification organizations specified in 4.1.3 and 4.2.3 of this standard. Those paragraphs contain a mandatory reference to ISO Guide 65, *General requirements far bodies operating product certification systems,* in which ISO Guide 27 is referenced.

A.4.6.2 By definition, a hazard might involve a condition that can be imminently dangerous to the end user. For that reason,

Copyright National Fire Protection Association
Provided by IHS under license with NFPA
No reproduction or networking permitted without license from IHS
Not for Resale

the investigation should be started immediately and completed in as timely a manner as is appropriate considering the particulars of the hazard being investigated.

A.4.6.11 The determination of the appropriate corrective action for the certification organization to initiate should take into consideration the severity of the product hazard and its potential consequences to the safety and health of end users. The scope of testing and evaluation should consider, among other things, testing to the requirements of the standard to which the product was listed as compliant, the age of the product, the type of use and conditions to which the compliant product has been exposed, care and maintenance that has been provided, the use of expertise on technical matters outside the certification organization's area of competence, and product hazards caused by circumstances not anticipated by the requirements of the applicable standard. As a guideline for determining which is more appropriate, a safety alert or a product recall, the following product hazard characteristics, which are based on 42 CFR 84, Subpart E, §84.41 are provided:

(1) *Critical:* A product hazard that judgment and experience indicate is likely to result in a condition immediately hazardous to life or health (IHLH) for individuals using or depending on the compliant product. If an IHLH condition occurs, the user will sustain, or will be *likely* to sustain, an injury of a severity that could result in loss of life, or result in significant bodily injury or loss of bodily function, either immediately or at some point in the future.
(2) *Major A:* A product hazard other than *Critical* that is likely to result in failure to the degree that the compliant product does not provide any protection or reduces protection *and is not detectable to the user.* The phrase *reduced protection* means the failure of specific protective design(s) or feature(s) that results in degradation of protection in advance of reasonable life expectancy to the point that continued use of the product is *likely* to cause physical harm to the user or where continued degradation could lead to IHLH conditions.
(3) *Major B:* A product hazard other than *Critical* or *Major A* that is likely to result in reduced protection and is detectable to the user. The phrase *reduced protection* means the failure of specific protective design(s) or feature(s) that results in degradation of protection in advance of reasonable life expectancy to the point that continued use of the product is *likely* to cause physical harm to the user or where continued degradation could lead to IHLH conditions.
(4) *Minor:* A product hazard other than *Critical, Major A,* or *Major B* that is not likely to materially reduce the usability of the compliant product for its intended purpose or a product hazard that is a departure from the established applicable standard and has little bearing on the effective use or operation of the compliant product for its intended purpose.

Where the facts are conclusive, based on characteristics of the hazard classified as indicated in the preceding list, the certification organization should consider initiating the following corrective actions with the authorized and responsible parties:

(1) *Critical* product hazard characteristics: Product recall
(2) *Major A* product hazard characteristics: Product recall or safety alert, depending on the nature of the specific product hazard
(3) *Major B* product hazard characteristics: Safety alert or no action, depending on the nature of the specific product hazard
(4) *Minor* product hazard characteristic: No action

A.4.6.13 Reports, proposals, and proposed TIAs should be addressed to the technical committee that is responsible for the applicable standard and sent to Standards Administration, NFPA, 1 Batterymarch Park, Quincy, MA 02169-7471.

A.5.1.1 Purchasers can include a requirement in the purchase specifications for an additional label that includes certain information such as the date of manufacture, manufacturer's name, and garment identification number to be located in a protected location on the garment, to reduce the chance of label degradation and as a backup source of information to aid in garment tracking or during an investigation.

A.5.1.3 The NFPA, from time to time, has received complaints that certain items of fire and emergency services protective clothing or protective equipment could be carrying labels falsely identifying those items as compliant with an NFPA standard. The requirement for placing the certification organization's mark on or next to the product label is to help ensure that the purchaser can readily determine compliance of the product through independent third-party certification.

A.5.2.4 A statement should be included in the user information specifying that, upon the purchaser's request, the manufacturer is to furnish all documentation required by this standard and the test data showing compliance with this standard. A statement also should be included in the user information specifying that, upon the purchaser's request, the manufacturer is to furnish a complete specification of all materials and components that each certified helmet comprises.

A.6.1.1.17 The selection of protective clothing size is related directly to the garment's ability to function properly. In occupations such as fire and rescue services, proper fit and function are related directly to the individual's ability to perform jobs that are often hazardous. Issues of proper fit are directly associated with the risk of injury. Protective clothing that restricts movement or exposes the skin to hazardous environments will result in lost efficiency and can promote injury and illness, respectively. Proper sizing is a factor in the ability of a person to perform tasks that often involve life or death situations. Protective clothing should fit well to function properly when additional safety equipment or other garments are worn. In addition, the selection of protective garment size has a direct impact on the maintaining of appropriate protection in areas where the protective garment has an interface with safety equipment or other protective garments. ASTM F 1731, *Standard Practice for Body Measurements and Sizing of Fire and Rescue Services Uniforms and Other Thermal Hazard Protective Clothing,* can be useful in the selection of protective clothing for technical operations. ASTM F 1731 primarily addresses processes for sizing the station/work uniforms referenced in NFPA 1975, *Standard on Station/Work Uniforms for Fire and Emergency Services*; however, the techniques described in ASTM F 1731 will be useful in the selection of protective clothing addressed in this standard as well.

A.6.1.3.6 The purchaser should consider the following sizing performance recommendations and evaluation methods:

(1) Glove fit/performance requirements:
    (a) Glove fit is defined in terms of finger length, finger circumference, glove circumference, and crotch offset.

Copyright National Fire Protection Association
Provided by IHS under license with NFPA
No reproduction or networking permitted without license from IHS
Not for Resale

(b) The thumb and index finger of the hand should reach the ends of the thumb and index finger of the glove.
(c) The middle and ring fingers of the glove can be permitted to extend beyond the finger of the hand no more than 10 mm (25⁄64 in.).
(d) The little finger of the glove can be permitted to extend beyond the little finger of the hand no more than 13 mm (½ in.).
(e) The finger crotches of the glove can be offset from the finger crotches of the hand no more than 13 mm (½ in.).
(f) The glove should not be permitted to constrict the fingers of the hand in circumference.
(g) Excess circumference of the glove over the fingers and hand can be permitted but should not exceed 10 mm (25⁄64) for any finger or 13 mm (½ in.) for the hand as a whole.

(2) Glove fit test method:
(a) The subject's hand should be measured for hand circumference and hand length to determine the correct size of test glove. The method described in 6.3.4 should be used.
(b) Samples should be conditioned to be new, after 10 washes *(see 8.1.10)*, and after heat resistance testing *(see Section 8.5)*.
(c) The subjects should don the test gloves as they would their own gloves.
(d) The subject should determine if the thumb and index finger are at the ends of the thumb and index finger of the glove. The tips of the thumb and index finger should be felt from the outside to verify the subject's answer.
(e) An inside diameter caliper should be used to measure the excess of glove finger over the test subject's finger for the middle, ring, and little fingers.
(f) The subject should determine if the glove constricts either the fingers or the hand in terms of circumference. Each finger and the sides of the gloved hand should be felt to verify the subject's answer.
(g) An inside diameter caliper should be used to measure any excess circumference in each finger and in the hand. When the values are recorded, the measured excess should be doubled to convert the flat dimension into a circumferential dimension (to account for the fact that there are two thicknesses of the glove material).
(h) The subject's hand dimensions, glove size, and all test results should be recorded.

A.6.2.1.18 See A.6.1.1.17.

A.6.2.3.6 See A.6.1.3.6.

A.7.1 Section 7.1 contains the specific performance requirements for utility protective ensemble elements, Section 7.2 contains the specific performance requirements for rescue and recovery ensemble elements, and Section 7.3 contains the specific performance requirements for CBRN ensembles. The performance requirements for helmet, footwear, and goggle elements are the same for utility and for rescue and recovery protective ensembles; however, the requirements are duplicated in each section to show all criteria that apply to each element of each ensemble. There are differences between the types of requirements and, in some cases, the actual performance levels for utility, rescue and recovery, and CBRN ensembles for garment and glove elements. The requirements for each ensemble type and any differences are shown in Table A.7.1(a) for ensemble garment elements and Table A.7.1(b) for ensemble glove elements.

A.7.1.1.7 Emblems or patches used on technical rescue elements are not included in the test requirements of this standard. Users are cautioned that emblems or patches with thick adhesive backings could melt and contribute to burn injury. In particular, users are cautioned about using large emblems or patches on technical rescue elements because they are not tested for heat or flame resistance.

A.7.2 See A.7.1.

A.7.2.1.7 See A.7.1.1.7.

A.7.3 See A.7.1.

A.7.3.1.1 The minimum $PPDF_i$, for technical rescue protective ensembles is based on the NIOSH conditions used for CBRN APR (i.e., 50 mg/m^3 × 60 min = 3000 mg · min/m^3) in evaluating the permeation of the blister agent distilled mustard (HD). This maximum exposure concentration is divided by the onset of symptoms exposure dosage (OSED), which is set at an exposure concentration (ECt_{10}) value that causes threshold mustard effects of blistering or ulceration in 10 percent of the population. Because blister agent effects vary with the body location, different values of the OSED are used for different areas of the body (varying from 25 to 100 mg · min/m^3). The reported value for $PPDF_i$ is normalized at each body area so that each $PPDF_i$ is compared on the same basis. The $PPDF_{sys}$ for USAR protective ensembles is based on NIOSH conditions used for CBRN APR (i.e., 210 mg/m^3 × 60 min = 12,600 mg·min/m^3) in evaluating the permeation of the nerve agent Sarin (GB), where the Soman (GD) concentration is assumed to be equivalent to the GB concentration specified in the standard. The onset of symptoms exposure dosage ($OSED_{sys}$) used to calculate the minimum $PPDF_{sys}$ factor for GD is 166 mg · min/m^3 (Grotte and Yang, IDA Document D-2176, "Report of the Workshop on Chemical Agent Toxicity for Acute Effects." This value is the dosage of GD that produces threshold effects of twitching and localized sweating for 10 percent of the population (ECt_{10}).

A.7.3.2.7 See A.7.1.1.7.

A.8.1.6.7 Under controlled conditions, a radiant heat load of 1.0 W/cm^2 is applied until a temperature of 260°C (500°F) is reached on a transducer. This temperature alone does not simulate actual field conditions but is a test devised to put extreme heat loads on helmets in an accurate and reproducible manner by testing laboratories. However, the radiant heat load of 1.0 W/cm^2 was selected as an average value based on studies of fire conditions that relate to field use.

A.8.14.4.1 Apparatus of the type described may be obtained from the following sources:

(1) The Fisher Scientific Company, 711 Forbes Avenue, Pittsburgh, PA 15219. The apparatus is known as the Fisher-Johns Melting Point Apparatus.
(2) Thomas Scientific, P. O. Box 99, Swedesboro, NJ 08085.

A.8.14.4.3 Six reference standards for use in calibrating the melting point apparatus can be obtained from U.S. Pharmacopeia Reference Standards, 12601 Twinbrook Parkway, Rockville, MD 20852-1790.

Copyright National Fire Protection Association
Provided by IHS under license with NFPA
No reproduction or networking permitted without license from IHS
Not for Resale

Table A.7.1(a) Performance Requirements for Protective Ensemble Garment Elements for Technical Rescue Incidents

Requirement	Test Method Section	Performance Criteria Paragraph		
		Utility Protective Ensemble	Rescue and Recovery Protective Ensemble	CBRN Protective Ensemble
Total heat loss	8.6	7.1.1.1 (650 W/m^2)	7.2.1.1 (450 W/m^2)	7.3.2.1 (250 W/m^2)
Tear resistance	8.7	7.1.1.2	7.2.1.2	7.3.2.2
Breaking strength	8.8	7.1.1.3	7.2.1.3	7.3.2.3
Abrasion resistance	8.9	7.1.1.4	7.2.1.4	7.3.2.4
Cleaning shrinkage resistance	8.10	7.1.1.5	7.2.1.5	7.3.2.5
Seam breaking strength	8.12	7.1.1.6	7.2.1.6	7.3.2.6
Flame resistance	8.4	7.1.1.7	7.2.1.7	7.3.2.7
Thermal shrinkage resistance	8.5	7.1.1.8	7.2.1.8	7.3.2.8
Heat resistance	8.5	7.1.1.9	7.2.1.9.1	7.3.2.9.1
Liquid barrier heat resistance	8.5		7.2.1.9.2	7.3.2.9.2
Thread heat resistance	8.14	7.1.1.10	7.2.1.10	7.3.2.10
Corrosion resistance	8.15	7.1.1.11	7.2.1.11	7.3.2.11
Thermal protective performance	8.2	7.1.1.12	7.2.1.12	7.3.2.12
Water absorption resistance	8.13	7.1.1.13	7.2.1.13	7.3.2.13
Label durability and legibility	8.40	7.1.1.14	7.2.1.17	7.3.2.16
Liquid penetration resistance	8.16		7.2.1.14	7.3.2.14
Viral penetration resistance	8.17		7.2.1.15	7.3.2.15
Overall liquid integrity	8.3		7.2.1.16	7.3.1.2*
Man-in-simulant test (vapor inward leakage resistance)	8.44			7.3.1.1*
Chemical permeation resistance	8.45			7.3.1.3
Burst strength	8.41			7.3.2.19†
Puncture propagation tear resistance	8.46			7.3.2.20†
Cold temperature performance	8.47			7.3.2.21†

*Garment is tested as part of overall ensemble.
†Criteria are applied if CBRN barrier layer of garment is the exterior layer.

A.8.19.4.9 The force transmission calibration procedures are as follows:

Equipment Guidelines. The instrumentation should be allowed to warm up until it stabilizes. No simple means exists to calibrate the impact system required by this standard. Nevertheless, calibration is necessary. The equipment should be checked for repeatability before and after each series of tests by impacting a standardized elastomeric shock pad. A minimum of three such impacts shall be recorded before and after testing. If the post-test average readings of the three impacts differs from the pre-test average by more than 5 percent, the entire test series shall be discarded.

The impact tester should have a guide rail at least 3 m in height and capable of producing impact velocities required by this standard. Test anvils, headforms, transducers, and so forth, mounted to the base should be attached so that no energy is absorbed through deflections, and the base should be at least 25 mm (1 in.) thick steel. Guide mechanisms which slide on the rail should have re-circulating ball bearings to minimize friction. The impactor guide mechanism should contain an automatic brake to prevent second impacts (bouncing). A velocity detector is required to ensure proper drop heights. The position of said detector should be adjustable so that the speed of impact is measured no more than 20 mm (0.79 in.) from the point of impact. A detector flag attached to the guide mechanism that passes through or by the detector should not be greater than 25 mm (1 in.) height. The detector should be capable of resolving velocities of 0.01 ms increments. Magnetic detector systems may also be used if equivalency is established. An electronic timer is used to determine the speed at which the flag traverses the detector. The load cell should conform to the following characteristics:

(1) Size: 75 mm (3 in.) diameter, min.
(2) Measuring range: 0–5000 N (0–1124 lbf), min.
(3) Resolution: 45 N (10.1 lbf), max.
(4) Accuracy, linearity: ±2.5% full-scale, max.
(5) Rigidity: 4.5×10^9 N/m (2.6×10^7 lbf/in.), min.
(6) Transverse sensitivity: 3.0%, max.

The load cell/headform–mounting system should not have a resonant frequency less than 5 kHz, and the frequency response

Copyright National Fire Protection Association
Provided by IHS under license with NFPA
No reproduction or networking permitted without license from IHS
Not for Resale

Table A.7.1(b) Performance Requirements for Protective Ensemble Glove Elements for Technical Rescue Incidents

Requirement	Test Method Section	Performance Criteria Paragraph		
		Utility Protective Ensemble	Rescue and Recovery Protective Ensemble	CBRN Protective Ensemble
Cut resistance	8.26	7.1.3.1	7.2.3.1	7.3.3.1
Puncture resistance	8.27	7.1.3.2	7.2.3.2	7.3.3.2
Abrasion resistance	8.11	7.1.3.3	7.2.3.3	7.3.3.3
Glove hand function	8.28	7.1.3.4 (150%)	7.2.3.4 (200%)	7.3.3.4 (200%)
Grip strength	8.29	7.1.3.5 (100%)	7.2.3.5 (90%)	7.3.3.5 (90%)
Glove donning	8.30	7.1.3.6	7.2.3.6	7.3.3.6
Flame resistance	8.24	7.1.3.7	7.2.3.7	7.3.3.7
Heat and thermal shrinkage resistance	8.5	7.1.3.8	7.2.3.8	7.3.3.8
Corrosion resistance	8.15	7.1.3.9	7.2.3.9	7.3.3.9
Conductive heat resistance	8.25	7.1.3.10	7.2.3.10	7.3.3.10
Wristlet burst strength	8.41	7.1.3.11	7.2.3.14	7.3.3.14
Thread heat resistance	8.14	7.1.3.12	7.2.3.15	7.3.3.15
Label durability and legibility	8.40	7.1.3.13	7.2.3.16	7.3.3.16
Thermal protective performance	8.2	7.1.3.14	7.2.3.17	7.3.3.17
Liquid penetration resistance	8.16		7.2.3.11	7.3.3.11
Viral penetration resistance	8.17		7.2.3.12	7.3.3.12
Overall liquid integrity	8.31		7.2.3.13	7.3.3.13
Man-in-simulant test (vapor inward leakage resistance)	8.44			7.3.1.1*
Chemical permeation resistance	8.45			7.1.1.3
Cut resistance (increased criteria)	8.26			7.3.3.18†
Puncture resistance (increased criteria)	8.27			7.3.3.19†
Abrasion resistance (increased criteria)	8.11			7.3.3.20†

*Glove is tested as part of overall ensemble.

†Criteria are applied if CBRN barrier layer of glove is the exterior layer.

of the system should be in compliance with SAE Recommended Practice J211b, "Instrumentation for Impact Test," Channel Class 1000.

It is recommended that the load cell output be recorded with a storage oscilloscope, transient recorder, or similar device designed to store maximum readings. However, maximum force readings can be obtained using a peak-indicating meter designed to store only a maximum reading. The frequency response of peak-indicating meters should at least meet the requirements of SAE Recommended Practice J211b, Channel Class 1000. Resolution should be 45 N (10.1 lbf), max., with rise time capability less than 0.01 ms.

Calibration. Strain gauge–type load cells generally can be calibrated statically by applying a known dead weight to the top of the load cell and checking the output signal. This works well with an oscilloscope or voltmeter. However, transient vibrations tend to create a problem when peak-indicating meters are used, and thus the load must be applied and removed with extreme care. Furthermore, static calibration does not take into account the dynamic response of the measuring system. Dynamic calibration is recommended but requires a calibrated reference accelerometer and a calibrating medium (shock pad). The reference accelerometer should have the following characteristics:

(1) Measuring range: 0–400 G, min.
(2) Resolution: 1.0 G, max.
(3) Accuracy, linearity: 1% full-scale, max.
(4) Transverse sensitivity: 3.0%, max.
(5) Resonant frequency: 20 kHz, min.
(6) Frequency response: ±0.5 dB @ 0.1 Hz–2.0 kHz
(7) Repeatability, stability: 1.0%, full-scale, max.

The calibrating medium should have the following characteristics:

(1) Material: Elastomer (high resilience and low hysteresis)
(2) Durometer: 50-60 Shore A
(3) Thickness: 25 mm (1 in.), min.
(4) Size: 100 mm (4 in.) diameter, min.

The accelerometer is mounted on top of the 3.6 kg (8 lb) impactor along its vertical axis (±2.5 degrees of true vertical) according to the manufacturer's instructions. A dual-channel storage oscilloscope is recommended for making simultaneous recordings of both accelerometer and load cell outputs. Both accelerometer and oscilloscope should be in recent calibration.

Copyright National Fire Protection Association
Provided by IHS under license with NFPA
No reproduction or networking permitted without license from IHS
Not for Resale

Force Measuring System Calibration Procedure. Remove headform from load cell and mount the calibrating medium to the top of the load cell. All electronic systems should be turned on and allowed to stabilize. The impactor, with accelerometer attached, should be dropped onto the calibrating medium from a height that yields a maximum acceleration reading of 100 G, ±10 G. Outputs of both accelerometer and load cell should be recorded. The two maximum values should read within 2.5 percent of each other according to $F = ma$ (force = mass × acceleration). This degree of accuracy must be repeatable through at least five impacts.

Velocity Measuring System Calibration Procedure. If a simulated detector flag (ball) cannot be dropped in free fall from a known height through or by the detector, the velocity-measuring system should be returned to the manufacturer at least every 6 months for recalibration. Otherwise, a ball of known diameter can be dropped from a known height to trigger the velocity detector. The ball must be large enough to properly trigger the detector and have enough mass to negate the effects of aerodynamic friction. The ball should be dropped from at least 1 m. The actual velocity is then calculated from the following:

$$V = \sqrt{2_{gh}}$$

where:
g = gravitational constant
h = drop height

This value is then compared to the measured velocity. Both values should agree within 1.0 percent.

System Repeatability Procedure. With the calibrating medium (shock pad) described previously mounted to the top of the load cell, three consecutive drops of the impactor onto the medium should be made. The velocity of impact should be maintained at 4.0 m/s, ±0.03 m/s (13.1 ft/s, ±0.1 ft/s). The repeatability value should be the average of the three maximum transmitted-force readings. However, the total range for the three values should not exceed ±3.0 percent of the average value.

A.8.31.4.1 An example of an inner glove fabric is a lightweight, tightly woven, medium- or dark-colored, 100 percent polyester fabric without surface treatment.

A.8.44.3.3 SCBA and some styles of footwear are likely to be acceptable after washing and 3 weeks in a ventilated space. Some items such as gloves and garments might not be easily decontaminated.

A.8.44.6.1 Examples of suitable analytical techniques include gas chromatography with thermal desorption of the adsorbent in the PAD and high performance liquid chromatography with methanol extraction of the adsorbent in the PAD.

A.8.44.7.2.1 These values are based on an analysis of the chamber data of Gorrill and Heinen presented in NATO Document No. 1268015, AEP-52, "Assessment of the Effect Levels of Classical Chemical Warfare Agents Applied to the Skin to Be Used in the Design of Protective Equipment," broken down by body region and are the EC_t (10) values for severe erythema, blistering, and desquamation. They include data for hot, humid exposures, where volunteers wore clothing covering almost everything but their hands and neck, and clothing was not necessarily removed immediately after exposure. Clothing is assumed to provide a PF of 2.

Annex B Informational References

B.1 Referenced Publications. The documents or portions thereof listed in this annex are referenced within the informational sections of this standard and are not part of the requirements of this document unless also listed in Chapter 2 for other reasons.

B.1.1 NFPA Publications. National Fire Protection Association, 1 Batterymarch Park, Quincy, MA 02169-7471.

NFPA 1971, *Standard on Protective Ensembles for Structural Fire Fighting and Proximity Fire Fighting*, 2007 edition.

NFPA 1975, *Standard on Station/Work Uniforms for Fire and Emergency Services*, 2004 edition.

NFPA 1977, *Standard on Protective Clothing and Equipment for Wildland Fire Fighting*, 2005 edition.

NFPA 1991, *Standard on Vapor-Protective Ensembles for Hazardous Materials Emergencies*, 2005 edition.

NFPA 1992, *Standard on Liquid Splash-Protective Ensembles and Clothing for Hazardous Materials Emergencies*, 2005 edition.

NFPA 1999, *Standard on Protective Clothing for Emergency Medical Operations*, 2003 edition.

B.1.2 Other Publications.

B.1.2.1 ANSI Publications. American National Standards Institute, Inc., 25 West 43rd Street, 4th Floor, New York, NY 10036.

ANSI/ISEA 107, *American National Standard for High Visibility Safety Apparel and Headwear*, 2004.

B.1.2.2 ASTM Publications. ASTM International, 100 Barr Harbor Drive, P.O. Box C700, West Conshohocken, PA 19428-2959.

ASTM F 1731, *Standard Practice for Body Measurements and Sizing of Fire and Rescue Services Uniforms and Other Thermal Hazard Protective Clothing*, 1996.

B.1.2.3 FEMA Publications. Federal Emergency Management Agency, 500 C Street, SW, Washington, DC 20472.

FA 136, "Protective Clothing and Equipment Needs of Emergency Responders for Urban Search and Rescue Missions."

B.1.2.4 IDA Publications. Institute for Defense Analyses, 4850 Mark Center Drive, Alexandria, VA 22311.

Grotte, J. H., and L. I. Yang, IDA Document D-2176, "Report of the Workshop on Chemical Agent Toxicity for Acute Effects," 1998.

B.1.2.5 ISO Publications. International Organization for Standards, 1, rue de Varembé, Case Postale 56, CH-1211 Genève 20, Switzerland.

ISO Guide 27, *Guidelines for corrective action to be taken by a certification body in the event of misuse of its mark of conformity*, 1983.

ISO Guide 65, *General requirements for bodies operating product certification systems*, 1996.

ISO 9000, *Quality Management Systems — Fundamentals and Vocabulary*, 2000.

ISO 9001, *Quality Management Systems — Requirements*, 2000.

B.1.2.6 NATO Publications. North Atlantic Treaty Organization, www.nato.int.

NATO Document No. 1268015, AEP-52, "Assessment of the Effect Levels of Classical Chemical Warfare Agents Applied to the Skin to Be Used in the Design of Protective Equipment," 2001.

Copyright National Fire Protection Association
Provided by IHS under license with NFPA
No reproduction or networking permitted without license from IHS
Not for Resale

B.1.2.7 SAE Publications. Society of Automotive Engineers, 400 Commonwealth Drive, Warrendale, PA 15096.

SAE Recommended Practice J211b, "Instrumentation for Impact Test."

B.1.2.8 U.S. Government Publications. U.S. Government Printing Office, Washington, DC 20402.

Title 21, Code of Federal Regulations, Part 7, Subpart C, 1997.

Title 42, Code of Federal Regulations, Part 84, Subpart E.

B.2 Informational References. (Reserved)

B.3 References for Extracts in Informational Sections. (Reserved)

Copyright National Fire Protection Association
Provided by IHS under license with NFPA
No reproduction or networking permitted without license from IHS
Not for Resale

Index

Copyright © 2007 National Fire Protection Association. All Rights Reserved.

The copyright in this index is separate and distinct from the copyright in the document that it indexes. The licensing provisions set forth for the document are not applicable to this index. This index may not be reproduced in whole or in part by any means without the express written permission of NFPA.

-A-

Abrasion durability test 8.40.4.2
Abrasion procedure 8.1.12
Abrasion resistance
Test 1 ..... 7.1.1.4, 7.2.1.4, 7.3.2.4, 8.9
Test 2 ..... 8.11
Footwear 7.1.4.1, 7.2.4.1, 7.3.5.1, 8.11.1.3, 8.11.8
Gloves 7.1.3.3, 7.2.3.3, 7.3.4.3, 7.3.4.20, 8.11.1.2, 8.11.7
Test 3 ..... 7.1.4.6, 7.2.4.6, 7.3.5.6, 8.35
Test 4 ..... 7.3.5.25, 8.48
Accessories 1.1.9, 1.3.9, 4.3.15, A.1.1.9, A.1.3.9
Annual verification of product compliance 4.4
Application of standard 1.3, A.1.1.9, A.1.3.5, A.1.3.9
Approved (definition) 3.2.1, A.3.2.1
Arch (definition) 3.3.1
Authority having jurisdiction (definition) 3.2.2, A.3.2.2

-B-

Barrier layer ..... 6.2.1.5; *see also* CBRN barrier layer
Definition 3.3.2
Biological agents (definition) 3.3.3
Biological terrorism agents (definition) 3.3.4
Body fluid–borne pathogen (definition) 3.3.5
Body fluids (definition) 3.3.6
Booties
Design requirements 6.3.2.3, 6.3.2.4, 6.3.5.2, 6.3.5.3
Tests, specific requirements for 8.3.1.1, 8.45.1.2, 8.45.1.3, 8.45.7, 8.45.8
Breaking strength test 7.1.1.3, 7.2.1.3, 7.3.2.3, 8.8
Brim (definition) 3.3.7
Burst strength test 7.1.3.11, 7.2.3.14, 7.3.2.19, 7.3.4.14, 8.41

-C-

Cargo pockets 6.2.1.13
Definition 3.3.8
Design 6.1.1.12
CBRN (definition) 3.3.9
CBRN barrier layer
Definition 3.3.10, A.3.3.10
Design requirements 6.3.3.1, 6.3.4.3
Performance requirements 7.3.1.3
Footwear ..... 7.3.5.22 to 7.3.5.25
Garment ..... 7.3.2.17 to 7.3.2.21
Gloves ..... 7.3.4.18 to 7.3.4.20
Helmet 7.3.3.12
Tests
Chemical permeation resistance test 8.45
Cut resistance test, specific requirements for 8.26.1.4, 8.26.9
Sample preparation procedures 8.1.8, 8.1.11, 8.1.12
CBRN technical rescue protective ensemble ... 1.1.1, 1.2.2.3, 4.1.2.1, A.1.2.2.3
Definition 3.3.11
Design requirements 6.3
Performance requirements 7.3, A.7.1
Product label requirements, specific 5.1.6.3
Respiratory protection 1.1.3, 4.1.2.2, A.1.1.3
Tests
Overall liquid integrity test, specific requirements for 8.3.1.5, 8.3.11
Sample preparation procedures 8.1.9
User information requirements, specific 5.2.5
CBRN technical rescue protective ensemble elements 1.1.2
Definition 3.3.12
Design requirements 6.3.1.3
Product label 5.1.6.3, 5.1.9
CBRN technical rescue protective footwear elements ..... 4.1.2.1; *see also* Booties; Footwear
Definition 3.3.13
Design requirements 6.3.1.3, 6.3.5
Performance requirements 7.3.5
Product label 7.3.5.19
Tests, specific requirements for
Chemical permeation resistance test 8.45.1.5, 8.45.10
Puncture resistance test 8.27.1.4, 8.27.9
CBRN technical rescue protective garment elements ..... 4.1.2.1; *see also* Garment
Definition 3.3.14
Design requirements 6.3.1.3, 6.3.2
Performance requirements 7.3.2, A.7.1.1.7
Product label 5.1.9, 7.3.2.9, 7.3.2.16
CBRN technical rescue protective glove elements ..... 4.1.2.1; *see also* Gloves
Definition 3.3.15
Design requirements 6.3.1.3, 6.3.4
Performance requirements 7.3.4
Product label 7.3.4.16
CBRN technical rescue protective helmet elements ... 4.1.2.1; *see also* Helmet
Definition 3.3.16
Design requirements 6.3.1.3, 6.3.3
Performance requirements 7.3.3
Product label 7.3.3.11
Tests, specific requirements for ... 8.45.1.2, 8.45.1.3, 8.45.7, 8.45.8
CBRN technical rescue protective hood elements
Definition 3.3.17
Design requirements 6.3.1.3, 6.3.3.1, 6.3.6
Performance requirements 7.3.6
CBRN terrorism agents
Definition 3.3.18, A.3.3.18
Protection for .....*see* CBRN technical rescue protective ensemble
Certification organization ... 4.1.2.1, 4.1.2.2, 4.1.3, 4.1.8 to 4.1.11; *see also* Certification/certified; Certification program; Labeled
Contract with manufacturers 4.2.5, A.4.2.5
Definition 3.3.19
Name and label, integrity of 4.2.12
Certification program 4.1.3, 4.2, A.4.2.1, A.4.2.5, A.4.2.6, A.4.2.9
Certification/certified ... Chap. 4; *see also* Certification organization; Certification program
Annual verification of product compliance 4.4
Appeals of decisions on 4.2.11
Definition 3.3.20
Hazards involving compliant product 4.2.10, 4.6, A.4.6.1, A.4.6.2, A.4.6.11
Inspection and testing 4.3
ISO registration for manufacturers 4.5.3, 4.5.5, A.4.5
Manufacturers' investigation of complaints and returns 4.7
Manufacturer's quality assurance program 4.5, A.4.5
Manufacturers' safety alert and product recall system 4.8
Char
Flame resistance test 8.4.6.1, 8.4.12.4, 8.4.13.3
Garment elements 7.1.1.7, 7.2.1.7, 7.3.2.7
Glove elements 7.1.3.7, 7.2.3.7, 7.3.4.7

Copyright National Fire Protection Association
Provided by IHS under license with NFPA
No reproduction or networking permitted without license from IHS
Not for Resale

Heat and thermal shrinkage resistance, garment outer shell 7.1.1.9, 7.2.1.9, 7.3.2.9
Thread heat resistance test 8.14.6, 8.14.7
Chemical permeation resistance test 7.3.1.3, 7.3.3.12, 8.45
Chemical terrorism agents 7.3.1.3
Definition 3.3.21
Chin straps ..... *see* Straps
Cleaning shrinkage resistance test 7.1.1.5, 7.2.1.5, 7.3.2.5, 8.10
Knit and stretch woven textile materials 8.10.1.3, 8.10.8
Woven textile materials 8.10.1.2, 8.10.7
Coat, overall liquid integrity test requirements 8.3.1.2, 8.3.1.4, 8.3.8, 8.3.10
Cold temperature performance test 7.3.2.21, 8.47
Collar
Definition 3.3.23
Design requirements 6.1.1.3, 6.2.1.3
Performance requirements 7.1.1.9, 7.2.1.9, 7.3.2.9
Collar lining 7.1.1.7, 7.2.1.7, 7.3.2.7, 8.13
Definition 3.3.24
Compliance/compliant ..... *see also* Certification/certified; Labeled
Annual verification of product compliance 4.4
Definition 3.3.25
Hazards involving compliant product 4.6, A.4.6.1, A.4.6.2, A.4.6.11
Component(s) (definition) 3.3.26
Composites
Definition 3.3.27
Garment elements
CBRN technical rescue protective elements 7.3.2.1, 7.3.2.12, 7.3.2.14, 7.3.2.15
Rescue and recovery technical rescue protective elements 7.2.1.1, 7.2.1.12, 7.2.1.14, 7.2.1.15
Utility technical rescue protective elements 7.1.1.1, 7.1.1.12
Glove elements
CBRN technical rescue protective elements ... 7.3.4.1 to 7.3.4.3, 7.3.4.7, 7.3.4.10, 7.3.4.17
Rescue and recovery technical rescue protective elements ..... 7.2.3.1 to 7.2.3.3, 7.2.3.10, 7.2.3.17
Utility technical rescue protective elements ... 7.1.3.1 to 7.1.3.4, 7.1.3.7, 7.1.3.10, 7.1.3.14
Compression resistance test 7.1.4.21, 7.2.4.21, 7.3.5.21, 8.42
Conductive heat resistance test 8.25
Footwear 7.1.4.15, 7.2.4.15, 7.3.4.10, 7.3.5.15, 8.25.1.3, 8.25.8
Gloves 7.1.3.10, 7.2.3.10, 8.25.1.2, 8.25.7
Confined space entry (definition) 3.3.28
Convective heat conditioning 8.1.8
Corrosion resistance test 8.15
Footwear 7.1.4.11, 7.2.4.11, 7.3.5.11, 8.15.1.4, 8.15.9
Garment 7.1.1.11, 7.2.1.11, 7.3.2.11
Gloves 7.1.3.9, 7.2.3.9, 7.3.4.9
Helmet 7.1.2.9, 7.2.2.9, 7.3.3.9, 8.15.1.3, 8.15.8
Coverall 6.1.1.6, 6.1.1.14, 6.2.1.7, 6.2.1.15, 8.3.1.4, 8.3.10
Crown straps ..... *see* Straps
Cut resistance test 8.26
Footwear 7.1.4.2, 7.2.4.2, 7.3.5.2, 7.3.5.22, 8.26.1.3, 8.26.8
Gloves 7.1.3.1, 7.2.3.1, 7.3.4.1, 7.3.4.18, 8.26.1.2, 8.26.7

-D-

Definitions ..... Chap. 3
Design requirements ..... 4.3.8, Chap. 6
CBRN technical rescue protective ensemble 6.3
Rescue and recovery technical rescue protective ensemble 6.2, A.6.1.1.17, A.6.1.3.6
Utility technical rescue protective ensemble 6.1, A.6.1.1.17, A.6.1.3.6
Don/doff 5.2.4
Drip
Definition 3.3.30
Flame resistance test 8.4.5.2
Footwear 7.1.4.12, 7.2.4.12, 7.3.5.12
Garment 7.1.1.7, 7.2.1.7, 7.3.2.7
Gloves 7.1.3.7, 7.2.3.7, 7.3.4.7
Heat and thermal shrinkage resistance test 8.5.5.5, 8.5.6.1, 8.5.7.1
Garment 7.1.1.9, 7.2.1.9, 7.3.2.9
Gloves 7.1.38, 7.2.3.8, 7.3.4.8
Goggles 7.1.5.2, 7.2.5.2

-E-

Electrical insulation
Test 1 ..... 7.1.2.6, 7.2.2.6, 7.3.3.6, 8.21
Test 2 ..... 7.1.4.9, 7.2.4.9, 7.3.5.9, 8.38
Elements ..... *see* Ensemble elements
Emblems 7.1.1.7, 7.2.1.7, A.7.1.1.7
Energy absorbing system (definition) 3.3.32
Ensemble ..... *see* CBRN technical rescue protective ensemble; Rescue and recovery technical rescue protective ensemble; Utility technical rescue protective ensemble
Ensemble elements ..... *see also* CBRN technical rescue protective ensemble elements; Rescue and recovery technical rescue protective ensemble elements; Utility technical rescue protective ensemble elements
Definition 3.3.33
User information 5.2, A.5.2.4
Eyelet and stud post attachment test . 7.1.4.10, 7.2.4.10, 7.3.5.10, 8.39

-F-

Fasteners, snaps, and zippers ..... 6.1.1.8 to 6.1.1.11
Flame resistance
Definition 3.3.34
Design requirements, sewing thread
Footwear 6.1.4.8, 6.2.4.8
Garment 6.1.1.7, 6.2.1.8
Gloves 6.1.3.5, 6.2.3.5
Helmet 6.1.2.7, 6.2.2.7
Test 1 ..... 7.1.1.7, 7.2.1.7, 7.3.2.7, 8.4, A.7.1.1.7
Test 2 ..... 8.18
Goggles 7.1.5.1, 7.2.5.1
Helmet 7.1.2.1, 7.1.2.2, 7.2.2.1, 7.2.2.2, 7.3.3.1, 7.3.3.2
Test 3 ..... 7.1.3.7, 7.2.3.7, 7.3.4.7, 8.24
Test 4 ..... 7.1.4.12, 7.2.4.12, 7.3.5.12, 8.32, A.8.32.4.1
Flammable or explosive atmospheres (definition) 3.3.35
Flash fire (definition) 3.3.36
Flexural fatigue procedure 8.1.11
Follow-up program 4.2.9, A.4.2.9
Definition 3.3.37
Footwear ..... *see also* CBRN technical rescue protective footwear; Rescue and recovery technical rescue protective footwear; Utility technical rescue protective footwear
Sample preparation procedures 8.1.2
Tests, specific requirements for
Abrasion resistance test 2 ..... 8.11.1.3, 8.11.8
Chemical permeation resistance test 8.45.1.5, 8.45.10
Conductive heat resistance test 8.25.1.3, 8.25.8
Corrosion resistance test 8.15.1.4, 8.15.9
Cut resistance test 8.26.1.3, 8.26.8
Heat and thermal shrinkage resistance test 8.5.1.7, 8.5.13
Label durability and legibility test 8.40.1.5, 8.40.10
Liquid penetration resistance test 8.16.1.4, 8.16.9
Puncture resistance test 8.27.1.3, 8.27.1.4, 8.27.8, 8.27.9
Thermal protective performance 8.2.1.4, 8.2.10
Viral penetration resistance test 8.17.1.4, 8.17.9
Footwear upper
CBRN technical rescue protective footwear elements ..... 6.3.5.3, 7.3.5.1 to 7.3.5.3, 7.3.5.14 to 7.3.5.17
Definition 3.3.39
Rescue and recovery technical rescue protective footwear elements ..... 6.2.4.3, 6.2.4.10, 7.2.4.1 to 7.2.4.3, 7.2.4.14 to 7.2.4.17

Copyright National Fire Protection Association
Provided by IHS under license with NFPA
No reproduction or networking permitted without license from IHS
Not for Resale

Tests, specific requirements for
Abrasion resistance test 2 ..... 8.11.1.3, 8.11.8
Conductive heat resistance test 8.25.1.3, 8.25.8
Cut resistance test 8.26.1.3, 8.26.8
Puncture resistance test 8.27.1.3, 8.27.1.4, 8.27.8, 8.27.9
Thermal protective performance 8.2.1.4, 8.2.10
Utility technical rescue protective footwear elements ..... 6.1.4.3, 6.1.4.10, 7.1.4.1 to 7.1.4.3, 7.1.4.14 to 7.1.4.17

-G-

Garment .....*see also* CBRN technical rescue protective garment elements; Rescue and recovery technical rescue protective garment elements; Utility technical rescue protective garment elements
Sample preparation procedures 8.1.2, 8.1.3, 8.1.9
Tests, specific requirements for
Chemical permeation resistance test 8.45.1.2, 8.45.1.3, 8.45.7, 8.45.8
Corrosion resistance test 8.15.1.2, 8.15.7
Heat and thermal shrinkage resistance test ... 8.5.1.1 to 8.5.1.4, 8.5.3.3, 8.5.8, 8.5.9
Label durability and legibility test 8.40.1.2, 8.40.7
Liquid penetration resistance test 8.16.1.2, 8.16.7
Thermal protective performance 8.2.1.2, 8.2.8
Viral penetration resistance test 8.17.1.2, 8.17.7
Garment closure
Definition 3.3.41
Design requirements
Rescue and recovery technical rescue protective garment elements ..... 6.2.1.9 to 6.2.1.12
Utility technical rescue protective garments .... 6.1.1.9 to 6.1.1.11
Performance requirements
CBRN technical rescue protective garment 7.3.2.7.1, 7.3.2.7.2, 7.3.2.9
Rescue and recovery technical rescue protective garment 7.2.1.7.1, 7.2.1.7.2, 7.2.1.9
Utility technical rescue protective garment 7.1.1.7.1, 7.1.1.7.2, 7.1.1.9
Garment closure assembly
Definition 3.3.42
Rescue technical rescue protective garment ..... 6.2.1.4, 6.2.1.6, 6.2.1.7, 6.2.1.14 to 6.2.1.16
Utility technical rescue protective garment ..... 6.1.1.4 to 6.1.1.6, 6.1.1.13 to 6.1.1.15
Garment material (definition) 3.3.43
Gauntlet (definition) 3.3.44
Glove body
Definition 3.3.46
Rescue and recovery technical rescue protective glove elements 6.2.3.4
Utility technical rescue protective glove elements 6.1.3.4
Glove donning test 7.1.3.6, 7.2.3.6, 7.3.4.6, 8.30
Glove hand function test 7.1.3.4, 7.2.3.4, 7.3.4.4, 8.28
Glove liner (definition) 3.3.48
Gloves .....*see also* CBRN technical rescue protective glove elements; Outer glove; Rescue and recovery technical rescue protective glove elements; Utility technical rescue protective glove elements
Sample preparation procedures 8.1.2, 8.1.7, 8.1.10
Tests, specific requirements for
Abrasion resistance test 2 ..... 8.11.1.1, 8.11.7
Chemical permeation resistance test 8.45.1.4, 8.45.9
Conductive heat resistance test 8.25.1.2, 8.25.7
Corrosion resistance test 8.15.1.2, 8.15.7
Cut resistance test 8.26.1.2, 8.26.7
Heat and thermal shrinkage resistance test 8.5.1.6, 8.5.3.3, 8.5.12
Label durability and legibility test 8.40.1.4, 8.40.9
Liquid penetration resistance test 8.16.1.3, 8.16.8
Puncture resistance test 8.27.1.2, 8.27.7
Thermal protective performance 8.2.1.3, 8.2.9
Viral penetration resistance test 8.17.1.3, 8.17.8
Goggles .....*see also* Rescue and recovery technical rescue protective goggle elements; Utility technical rescue protective goggle elements
Definition 3.3.49
Tests, specific requirements for
Heat and thermal shrinkage resistance test 8.5.1.8, 8.5.14
Sample preparation procedures 8.1.2
Grip test 7.1.3.5, 7.2.3.5, 7.3.4.5, 8.29

-H-

Hardware
CBRN technical rescue protective ensemble elements
Footwear 7.3.5.10, 7.3.5.11
Garment 7.3.2.9, 7.3.2.11
Glove 7.3.4.9
Helmet 7.3.3.9
Definition 3.3.50
Rescue and recovery technical rescue protective ensemble elements
Footwear ..... 6.2.4.9 to 6.2.4.12, 7.2.4.10, 7.2.4.11
Garment 6.2.1.9, 6.2.1.16, 6.2.1.17, 7.2.1.9, 7.2.1.11
Glove 7.2.3.9
Helmet 7.2.2.9
Tests, specific requirements for 8.5.1.4, 8.5.10
Utility technical rescue protective ensemble elements
Footwear ..... 6.1.4.9 to 6.1.4.12, 7.1.4.10, 7.1.4.11
Garment 6.1.1.8, 6.1.1.15, 6.1.1.16, 7.1.1.9, 7.1.1.11
Glove 7.1.3.9
Helmet 7.1.2.9
Hazards involving compliant product 4.6, A.4.6.2, A.4.6.11
Headband (definition) 3.3.51
Headform (definition) 3.3.52
Heat and thermal shrinkage resistance test 8.5
Footwear 7.1.4.13, 7.2.4.13, 7.3.5.13, 8.5.1.7, 8.5.13
Garment 7.1.1.8, 7.1.1.9, 7.2.1.8, 7.2.1.9, 7.3.2.8, 7.3.2.9
Garments ..... 8.5.1.1 to 8.5.1.4, 8.5.3.3, 8.5.8, 8.5.9
Gloves 7.1.3.8, 7.2.3.8, 7.3.4.8, 8.5.1.6, 8.5.3.3, 8.5.12
Goggles 7.1.5.2, 7.2.5.2, 8.5.1.8, 8.5.14
Hardware 8.5.1.4, 8.5.10
Helmet 7.1.2.3, 7.2.2.3, 7.3.3.3, 8.5.1.5, 8.5.11
Label materials 8.5.1.3, 8.5.9
Visibility markings 8.5.1.3, 8.5.9
Heat durability test 8.40.4.3
Helmet ...*see also* CBRN technical rescue protective helmet elements; Rescue and recovery technical rescue protective helmet elements; Utility technical rescue protective helmet elements
Sample preparation procedures ..... 8.1.2, 8.1.4 to 8.1.6
Tests, specific requirements for
Corrosion resistance test 8.15.1.3, 8.15.8
Heat and thermal shrinkage resistance test 8.5.1.5, 8.5.11
Label durability and legibility test 8.40.1.3, 8.40.8
Helmet positioning index (definition) 3.3.54
Hood .....*see* CBRN technical rescue protective hood elements

-I-

Impact resistance test 7.1.4.4, 7.2.4.4, 7.3.5.4, 8.33
Industrial chemicals, toxic 7.3.1.3
Insole
Definition 3.3.56
Rescue and recovery technical rescue protective footwear elements 6.2.4.3, 6.2.4.4, 6.2.4.10
Utility technical rescue protective footwear elements 6.1.4.3, 6.1.4.4, 6.1.4.10
Inspections
Certification 4.3
Follow-up program 4.2.9, A.4.2.9
Definition 3.3.37

Copyright National Fire Protection Association
Provided by IHS under license with NFPA
No reproduction or networking permitted without license from IHS
Not for Resale

Recertification 4.4.1
Records 4.3.17, 4.4.3
User information 5.2.4, A.5.2.4
Interface area (definition) 3.3.57
Interface components 4.1.2.1, 6.3.1.3, 6.3.3.1, 6.3.4.4, 6.3.6
CBRN technical rescue protective ensembles 5.2.5
Definition 3.3.58, A.3.3.58
ISO registration, manufacturer 4.5.3, 4.5.5, A.4.5

-L-

Label durability and legibility test 8.40
Abrasion durability 8.40.4.2
Heat durability 8.40.4.3
Laundering durability 8.40.4.1
Performance requirements
Footwear 7.1.4.19, 7.2.4.19, 7.3.5.19
Garment 7.1.1.14, 7.2.1.17, 7.3.2.16
Glove 7.1.3.13, 7.2.3.16, 7.3.4.16
Helmet 7.1.2.11, 7.2.2.11, 7.3.3.11
Labeled ..... 4.1.2, 4.1.5, 4.1.8, 4.1.10, 4.1.11; *see also* Product label
Definition 3.2.3
Integrity of label, protecting 4.2.12
Removal of label from product 4.6.11, A.4.6.11
Laboratory facilities ..... 1.2.3, 4.2.6, 4.3.2, 4.3.3.1 to 4.3.3.5, A.1.2.3, A.4.2.6
Ladder shank .....*see* Shank
Ladder shank bend resistance test 7.1.4.5, 7.2.4.5, 7.3.5.5, 8.34
Laundering durability test 8.40.4.1
Lettering 7.1.1.7, 7.2.1.7, 7.3.2.7
Lettering transfer film test 8.4.1.6, 8.4.12
Linings ..... 7.1.1.7 to 7.1.1.9, 7.2.1.7 to 7.2.1.9, 7.3.2.7 to 7.3.2.9
Liquid-borne pathogen (definition) 3.3.60
Liquid penetration resistance test 8.16
Footwear 7.1.4.16, 7.2.4.13, 7.2.4.16, 7.3.5.16, 8.16.1.4, 8.16.9
Garment 7.2.1.14, 7.3.2.14, 8.16.1.2, 8.16.7
Gloves 7.2.3.11, 7.3.4.11, 8.16.1.3, 8.16.8
Listed 4.1.6
Definition 3.2.4, A.3.2.4
Low temperature environmental conditioning procedure 8.1.4

-M-

Maintenance and cleaning 5.2.4, 5.2.5
Man-in-simulant test (MIST) 7.3.1.1, 8.44, A.7.3.1.1, A.8.44.3.3, A.8.44.6.1, A.8.44.7.2.1
Manufacturer 4.1.4, 4.2.8, A.4.1.4
Annual verification of product compliance 4.4
Appeal of certification decisions 4.2.11
Certification organization, role in 4.2.1, A.4.2.1
Compliant product, hazards involving ..... 4.6.4, 4.6.6 to 4.6.10
Contract with certification organization 4.2.5, A.4.2.5
Definition 3.3.63
Investigation of complaints and returns 4.7
ISO registration 4.5.3, 4.5.5, A.4.5
Labeled products .....*see* Labeled
Quality assurance program 4.2.7, 4.5, A.4.2.7.1, A.4.5
Records maintained by 4.3.17, 4.4.3
Safety alert and product recall system 4.2.7, 4.5.1, 4.6.11, 4.7.3, 4.8, A.4.2.7.1, A.4.6.11
Tests 4.3.3, 4.3.4
Measurement, units of 1.4, A.1.4
Melt
Definition 3.3.64
Flame resistance test 8.4.5.2
Footwear 7.1.4.12, 7.2.4.12, 7.3.5.12
Garment 7.1.1.7, 7.2.1.7, 7.3.2.7
Gloves 7.1.3.7, 7.2.3.7, 7.3.4.7
Heat and thermal shrinkage resistance test 8.5.5.5, 8.5.6.1, 8.5.7.1
Footwear 7.1.4.13, 7.2.4.13, 7.3.5.13
Garment 7.1.1.9, 7.2.1.9, 7.3.2.9
Gloves 7.1.38, 7.2.3.8, 7.3.4.8
Goggles 7.1.5.2, 7.2.5.2
Thread heat resistance test 8.14.6, 8.14.7
Footwear 7.1.4.18, 7.2.4.18, 7.3.5.18
Garment 7.1.1.10, 7.2.1.10, 7.3.2.10
Gloves 7.1.3.12, 7.2.3.15, 7.3.4.15
Helmet 7.1.2.10, 7.2.2.10, 7.3.3.10
Metatarsal protection test 7.1.4.20, 7.2.4.20, 7.3.5.20, 8.43
Midsagittal plane (definition) 3.3.65
Model (definition) 3.3.67
Modified products 4.2.8, 4.3.11, 4.3.12, 4.3.16

-N-

Nape device 6.1.2.3, 6.2.2.3
Definition 3.3.68

-O-

Operations .....*see* Search operations; Technical rescue operations
Outer glove 6.3.4.3
Definition 3.3.70
Outer shell
Abrasion resistance test one 8.9
Breaking strength test 8.8
CBRN technical rescue protective garment ..... 7.3.2.3 to 7.3.2.5, 7.3.2.9, 7.3.2.13
Definition 3.3.71
Rescue and recovery technical rescue protective garment ..... 6.2.1.5, 7.2.1.3 to 7.2.1.5, 7.2.1.9, 7.2.1.13
Utility technical rescue protective garment elements ..... 7.1.1.3 to 7.1.1.5, 7.1.1.9, 7.1.1.13
Water absorption test 8.13
Overall liquid integrity
Test 1 ..... 7.2.1.16, 7.3.1.2, 8.3
Test 2 ..... 7.2.3.13, 7.3.4.13, 8.31

-P-

Package (definition) 3.3.72
Patches 7.1.1.7, A.7.1.1.7
Performance requirements ..... 4.3.9, Chap. 7
Physical penetration resistance test 7.1.2.5, 7.2.2.5, 7.3.3.5, 8.20
Physiological protective dosage factor (PPDF) 7.3.1.1, 8.44.7.2, 8.44.8, 8.44.9, A.7.3.1.1
Pre-use information 5.2.4
Product (definition) 3.3.73
Product label ..... 4.1.7, 4.1.8, 4.1.11, 4.3.5, 4.3.6, Chap. 5
CBRN technical rescue protective ensemble and elements
Footwear 7.3.5.19
Garment 5.1.9, 7.3.2.9, 7.3.2.16
Glove 7.3.4.16
Helmet 7.3.3.11
Wording requirement 5.1.6.3
Definition 3.3.74, A.3.3.74
Goggles 5.1.10
Label durability and legibility test .....*see* Label durability and legibility test
Requirements 5.1, A.5.1.1, A.5.1.3
Rescue and recovery technical rescue protective ensemble elements
Footwear 7.2.4.19
Garment 7.2.1.9, 7.2.1.17
Glove 7.2.3.16
Helmet 6.2.2.8, 7.2.2.11
Supplementary product labels 5.1.8
Tests 8.5.1.3, 8.5.9, 8.40
Sample preparation 8.1.8
User information 5.2, A.5.2.4
Utility technical rescue protective ensemble elements
Footwear 7.1.4.19
Garment 7.1.1.9, 7.1.1.14

Copyright National Fire Protection Association
Provided by IHS under license with NFPA
No reproduction or networking permitted without license from IHS
Not for Resale

Glove 7.1.3.13
Helmet 6.1.2.8, 7.1.2.11
Protective clothing .....*see* CBRN technical rescue protective ensemble; Rescue and recovery technical rescue protective ensemble; Utility technical rescue protective ensemble
Protective coat .....*see* Coat, overall liquid integrity test requirements
Protective coverall .....*see* Coverall
Protective ensemble .....*see* CBRN technical rescue protective ensemble; Rescue and recovery technical rescue protective ensemble; Utility technical rescue protective ensemble
Protective footwear ...*see* CBRN technical rescue protective footwear elements; Footwear; Rescue and recovery technical rescue protective footwear elements; Utility technical rescue protective footwear elements
Protective garment ....*see* CBRN technical rescue protective garment elements; Garment; Rescue and recovery technical rescue protective garment elements; Utility technical rescue protective garment elements
Protective gloves .....*see* CBRN technical rescue protective glove elements; Gloves; Rescue and recovery technical rescue protective glove elements; Utility technical rescue protective glove elements
Protective goggle .....*see* Goggles; Rescue and recovery technical rescue protective goggle elements; Utility technical rescue protective goggle elements
Protective helmet .....*see* CBRN technical rescue protective helmet elements; Helmet; Utility technical rescue protective helmet elements
Protective trouser .....*see* Trouser, overall liquid integrity test requirements
Protective wristlets .....*see* Wristlets
Puncture propagation tear resistance test 7.3.2.20, 8.46
Puncture resistance
Test 1 ..... 8.27
Footwear 7.1.4.3, 7.2.4.3, 7.3.5.3, 7.3.5.23, 7.3.5.24, 8.27.1.3, 8.27.1.4, 8.27.8, 8.27.9
Gloves 7.1.3.2, 7.2.3.2, 7.3.4.2, 7.3.4.19, 8.27.1.2, 8.27.7
Test 2 ..... 7.1.4.7, 7.2.4.7, 7.3.5.7, 8.36
Puncture-resistant device
Definition 3.3.85
Rescue and recovery technical rescue protective footwear elements 6.2.4.3, 6.2.4.6, 6.2.4.10
Utility technical rescue protective footwear elements 6.1.4.3, 6.1.4.6, 6.1.4.10
Purpose of the standard 1.2, A.1.2

-Q-

Quality assurance program, manufacturers' .....*see* Manufacturer

-R-

Radiant and convective heat environment conditioning procedure 8.1.6, A.8.1.6.7
Radiological agents (definition) 3.3.86
Radiological particulate terrorism agents (definition) 3.3.87, A.3.3.87
Recertification 4.3.16, 4.4
Recovery (definition) 3.3.88
References ..... Chap. 2, Annex B
Rescue and recovery technical rescue protective ensemble 1.1.1, 1.2.2.2, A.1.2.2.2
Definition 3.3.89, A.3.3.89
Design requirements 6.2, A.6.1.1.17, A.6.1.3.6
Performance requirements 7.2, A.7.1
Product label 5.1.6.2
Respiratory protection 1.1.4
Rescue and recovery technical rescue protective ensemble elements 1.1.2
Definition 3.3.90
Product label 5.1.6.2
Rescue and recovery technical rescue protective footwear elements .....*see also* Footwear
Definition 3.3.91
Design requirements 6.2.4
Performance requirements 7.2.4
Product label 7.2.4.19
Sizing 6.2.4.14
Rescue and recovery technical rescue protective garment elements .....*see also* Garment
Definition 3.3.92
Design requirement 6.2.1
Performance requirements 7.2.1
Product label 7.2.1.9, 7.2.1.17
Sizing 6.2.1.18, A.6.1.1.17
Rescue and recovery technical rescue protective glove elements .....*see also* Gloves
Definition 3.3.93
Design requirements 6.2.3
Performance requirements 7.2.3
Product label 7.2.3.16
Sizing 6.2.3.6, A.6.1.3.6
Rescue and recovery technical rescue protective goggle elements .....*see also* Goggles
Definition 3.3.94
Design requirements 6.2.5
Performance requirements 7.2.5
Product label 5.1.10
Rescue and recovery technical rescue protective helmet elements .....*see also* Helmet
Definition 3.3.95
Design requirements 6.2.2
Performance requirements 7.2.2
Product label 6.2.2.8, 7.2.2.11
Respirator 6.3.1.2, 6.3.1.4, 6.3.1.5
Respiratory protection 1.1.3, 1.1.4, A.1.1.3
Retention system (definition) 3.3.96
Retention system test 7.1.2.8, 7.2.2.8, 7.3.3.8, 8.23
Retirement and disposal 5.2.4, A.1.1.3

-S-

Safety alert and product recall system, manufacturers' .....*see* Manufacturer
Samples 4.3.9.2
Definition 3.3.97
Test preparation procedures 8.1, A.8.1.6.7
Scope of standard 1.1, A.1.1
Seam breaking strength test 7.1.1.6, 7.2.1.6, 7.3.2.6, 8.12
Seams
Chemical permeation resistance test 8.45
Combination woven and knit seam assemblies 7.1.1.6.2, 7.2.1.6.2, 7.3.2.6.2
Definition 3.3.98
Major A 7.1.1.6.1, 7.2.1.6.1, 7.3.2.6.1
Definition 3.3.98.1
Major B 7.1.1.6.1, 7.2.1.6.1, 7.3.2.6.1
Definition 3.3.98.2
Minor (definition) 3.3.98.3
Performance requirements 7.1.1.6, 7.2.1.6, 7.3.2.6
Strength 7.1.1.6.3
Stretch knit seam assemblies 7.1.1.6.2, 7.2.1.6.2, 7.3.2.6.2
Search operations (definition) 3.3.69.1
Separate
Definition 3.3.99
Heat and thermal shrinkage resistance test 8.5.5.5, 8.5.6.1, 8.5.7.1
Footwear 7.1.4.13, 7.2.4.13, 7.3.5.13
Garment 7.1.1.9, 7.2.1.9, 7.3.2.9
Gloves 7.3.4.8
Shall (definition) 3.2.5
Shank
Definition 3.3.100

--`,,```,,,,````-`-`,,`,,`,`,,`---

Copyright National Fire Protection Association
Provided by IHS under license with NFPA
No reproduction or networking permitted without license from IHS
Not for Resale

Design requirements 6.1.4.3, 6.2.4.3, 7.1.4.5
Ladder shank bend resistance test 7.1.4.5, 7.2.4.5, 7.3.5.5, 8.34
Shell ..... *see* Outer shell
Should (definition) 3.2.6
Site stabilization (definition) 3.3.102
Slip resistance test 7.1.4.8, 7.2.4.8, 7.3.5.8, 8.37
Small materials, testing 7.1.1.7.3, 8.4.1.7, 8.4.13
Specimens 4.3.9.1, 4.3.13
Definition 3.3.103
Standard (definition) 3.2.7
Straps
Chin straps 6.2.2.6, 7.1.2.8, 7.2.2.8, 7.3.3.8
Definition 3.3.104.1
Design requirements 6.1.2.6
Crown straps 6.1.2.5, 6.2.2.5
Definition 3.3.104.2
Suspension 6.1.2.3, 6.2.2.3
Definition 3.3.105
Suspension system retention test 7.1.2.7, 7.2.2.7, 7.3.3.7, 8.22
Sweatband 6.1.2.4, 6.2.2.4
Definition 3.3.106

-T-

Tear resistance test 7.1.1.2, 7.2.1.2, 7.3.2.2, 8.7
Technical rescue incidents (definition) 3.3.107
Technical rescue operations (definition) 3.3.69.2
Technical rescue protective ensemble ..... *see* CBRN technical rescue protective ensemble; Rescue and recovery technical rescue protective ensemble; Utility technical rescue protective ensemble
Technical rescue protective footwear ..... *see* CBRN technical rescue protective footwear elements; Footwear; Rescue and recovery technical rescue protective footwear elements; Utility technical rescue protective footwear elements
Technical rescue protective garment ..... *see* CBRN technical rescue protective garment elements; Garment; Rescue and recovery technical rescue protective garment elements; Utility technical rescue protective garment elements
Technical rescue protective gloves ..... *see* CBRN technical rescue protective glove elements; Gloves; Rescue and recovery technical rescue protective glove elements; Utility technical rescue protective glove elements
Technical rescue protective goggle ..... *see* Goggles; Rescue and recovery technical rescue protective goggle elements; Utility technical rescue protective goggle elements
Technical rescue protective helmet ..... *see* CBRN technical rescue protective helmet elements; Helmet; Utility technical rescue protective helmet elements
Tests ..... Chap. 8
Certification program 4.3
Facilities and equipment for ..... 1.2.3, 4.2.6, 4.3.2, 4.3.3.1 to 4.3.3.5, A.1.2.3, A.4.2.6
Follow-up program ..... 4.2.9.2 to 4.2.9.4, A.4.2.9
Manufacturer's 4.3.3, 4.3.4
Recertification 4.4.1
Records 4.3.17, 4.4.3
Textile fabric
Definition 3.3.114
Knits
Cleaning shrinkage resistance test 8.10.1.3, 8.10.8
Combination woven and knit seam assemblies 7.1.1.6.2, 7.2.1.6.2, 7.3.2.6.2
Stretch knit seam assemblies 7.1.1.6.2, 7.2.1.6.2, 7.3.2.6.2
Tests, specific requirements for 8.4.1.3, 8.4.9
Performance requirements .... 7.1.1.7 to 7.1.1.9, 7.2.1.7 to 7.2.1.9, 7.3.2.7 to 7.3.2.9
Tests, specific requirements for
Cleaning shrinkage resistance ... 8.10.1.2, 8.10.1.3, 8.10.7, 8.10.8
Garment materials 8.5.1.2, 8.5.8
Garments, visibility markings, and label materials 8.5.1.3, 8.5.9
Knit materials 8.4.1.3, 8.4.9
Nonwoven materials 8.4.1.4, 8.4.10
Woven materials 8.4.1.2, 8.4.8
Woven
Cleaning shrinkage resistance test 8.10.1.2, 8.10.1.3, 8.10.7, 8.10.8
Combination woven and knit seam assemblies 7.1.1.6.2, 7.2.1.6.2, 7.3.2.6.2
Tests, specific requirements for 8.4.1.2, 8.4.8
Thermal protective performance test 7.1.1.12, 7.1.3.14, 7.1.4.14, 7.2.1.12, 7.2.3.17, 7.2.4.14, 7.3.2.12, 7.3.4.17, 7.3.5.14, 8.2
Thread, flame resistance of
Footwear 6.1.4.8, 6.2.4.8
Garment 6.1.1.7, 6.2.1.8
Gloves 6.1.3.5, 6.2.3.5
Helmet 6.1.2.7, 6.2.2.7
Thread heat resistance test 8.14, A.8.14.4.1, A.8.14.4.3
Footwear 7.1.4.18, 7.2.4.18, 7.3.5.18
Garment 7.1.1.10, 7.2.1.10, 7.3.2.10
Gloves 7.1.3.12, 7.2.3.15, 7.3.4.15
Helmet 7.1.2.10, 7.2.2.10, 7.3.3.10
Toecap
Definition 3.3.115
Rescue and recovery technical rescue protective footwear elements 6.2.4.3, 6.2.4.7
Utility technical rescue protective footwear elements 6.1.4.3, 6.1.4.7
Top impact resistance test (force) 7.1.2.4, 7.2.2.4, 7.3.3.4, 8.19, A.8.19.4.9
Top line (definition) 3.3.116
Torso
Lower torso
Definition 3.3.117.1
Garment sizing 6.1.1.17.3, 6.1.1.17.4, 6.2.1.18.3, 6.2.1.18.4
Upper torso
Closure systems 6.1.1.13, 6.2.1.14
Definition 3.3.117.2
Garment sizing 6.1.1.17.1, 6.1.1.17.2, 6.2.1.18.1, 6.2.1.18.2
Total heat loss test 7.1.1.1, 7.2.1.1, 7.3.2.1, 8.6
Toxic industrial chemicals 7.3.1.3
Definition 3.3.118
Trench/cave-in rescue (definition) 3.3.119
Trouser, overall liquid integrity test requirements 8.3.1.3, 8.3.1.4, 8.3.9, 8.3.10

-U-

Units of measurement 1.4, A.1.4
User information 4.3.6, 4.3.7, 5.2, A.5.2.4
Utility technical rescue protective ensemble 1.1.1, 1.2.2.1, A.1.2.2.1
Definition 3.3.121
Design requirements 6.1, A.6.1.1.17, A.6.1.3.6
Performance requirements 7.1, A.7.1
Product label 5.1.6.1
Respiratory protection 1.1.4
Utility technical rescue protective ensemble elements 1.1.2
Definition 3.3.122
Product label 5.1.6.1
Utility technical rescue protective footwear elements ..... *see also* Footwear
Definition 3.3.123
Design requirements 6.1.4
Performance requirements 7.1.4
Product label 7.1.4.19
Sizing 6.1.4.14
Utility technical rescue protective garment elements ..... *see also* Garment
Definition 3.3.124
Design requirements 6.1.1, A.6.1.1.17

Copyright National Fire Protection Association
Provided by IHS under license with NFPA
No reproduction or networking permitted without license from IHS
Not for Resale

Performance requirements 7.1.1, A.7.1.1.7
Product label 7.1.1.9, 7.1.1.14
Sizing 6.1.1.17, A.6.1.1.17
Utility technical rescue protective glove elements .....*see also* Gloves
Definition 3.3.125
Design requirements 6.1.3, A.6.1.3.6
Performance requirements 7.1.3
Product label 7.1.3.13
Sizing 6.1.3.6, A.6.1.3.6
Utility technical rescue protective goggle elements ....*see also* Goggles
Definition 3.3.126
Design requirements 6.1.5
Performance requirements 7.1.5
Product label 5.1.10
Utility technical rescue protective helmet elements ....*see also* Helmet
Definition 3.3.127
Design requirements 6.1.2
Performance requirements 7.1.2
Product label 6.1.2.8, 7.1.2.11

-V-

Vehicle/person extrication (definition) 3.3.128
Viral penetration resistance test 8.17
Footwear 7.1.4.17, 7.2.4.17, 7.3.5.17, 8.17.1.4, 8.17.9
Garment 7.2.1.15, 7.3.2.15, 8.17.1.2, 8.17.7
Gloves 7.2.3.12, 7.3.4.12, 8.17.1.3, 8.17.8
Visibility markings 1.1.6, A.1.1.6
Samples, preparation of 8.1.8
Tests, specific requirements for 8.4.1.5, 8.4.11, 8.5.1.3, 8.5.9

-W-

Washing and drying procedure 8.1.3, 8.1.10
Water absorption resistance test 7.1.1.13, 7.2.1.13, 7.3.2.13, 8.13
Wear surface (definition) 3.3.129
Wet conditioning procedure 8.1.5, 8.1.7
Wristlets
CBRN technical rescue protective glove elements 7.3.2.9, 7.3.4.14
Definition 3.3.130
Rescue and recovery technical rescue protective glove elements 6.2.3.3, 7.2.1.9, 7.2.3.14
Utility technical rescue protective glove elements 6.1.3.3, 7.1.1.9, 7.1.3.11

Copyright National Fire Protection Association
Provided by IHS under license with NFPA
No reproduction or networking permitted without license from IHS
Not for Resale

Sequence of Events Leading to Issuance of an NFPA Committee Document

Step 1: Call for Proposals

- Proposed new Document or new edition of an existing Document is entered into one of two yearly revision cycles, and a Call for Proposals is published.

Step 2: Report on Proposals (ROP)

- Committee meets to act on Proposals, to develop its own Proposals, and to prepare its Report.
- Committee votes by written ballot on Proposals. If two-thirds approve, Report goes forward. Lacking two-thirds approval, Report returns to Committee.
- Report on Proposals (ROP) is published for public review and comment.

Step 3: Report on Comments (ROC)

- Committee meets to act on Public Comments to develop its own Comments, and to prepare its report.
- Committee votes by written ballot on Comments. If two-thirds approve, Report goes forward. Lacking two-thirds approval, Report returns to Committee.
- Report on Comments (ROC) is published for public review.

Step 4: Technical Report Session

- "*Notices of intent to make a motion"* are filed, are reviewed, and valid motions are certified for presentation at the Technical Report Session. ("Consent Documents" that have no certified motions bypass the Technical Report Session and proceed to the Standards Council for issuance.)
- NFPA membership meets each June at the Annual Meeting Technical Report Session and acts on Technical Committee Reports (ROP and ROC) for Documents with "certified amending motions."
- Committee(s) vote on any amendments to Report approved at NFPA Annual Membership Meeting.

Step 5: Standards Council Issuance

- Notification of intent to file an appeal to the Standards Council on Association action must be filed within 20 days of the NFPA Annual Membership Meeting.
- Standards Council decides, based on all evidence, whether or not to issue Document or to take other action, including hearing any appeals.

Committee Membership Classifications

The following classifications apply to Technical Committee members and represent their principal interest in the activity of the committee.

M *Manufacturer:* A representative of a maker or marketer of a product, assembly, or system, or portion thereof, that is affected by the standard.

U *User:* A representative of an entity that is subject to the provisions of the standard or that voluntarily uses the standard.

I/M *Installer/Maintainer:* A representative of an entity that is in the business of installing or maintaining a product, assembly, or system affected by the standard.

L *Labor:* A labor representative or employee concerned with safety in the workplace.

R/T *Applied Research/Testing Laboratory:* A representative of an independent testing laboratory or independent applied research organization that promulgates and/or enforces standards.

E *Enforcing Authority:* A representative of an agency or an organization that promulgates and/or enforces standards.

I *Insurance:* A representative of an insurance company, broker, agent, bureau, or inspection agency.

C *Consumer:* A person who is, or represents, the ultimate purchaser of a product, system, or service affected by the standard, but who is not included in the *User* classification.

SE *Special Expert:* A person not representing any of the previous classifications, but who has a special expertise in the scope of the standard or portion thereof.

NOTES;
1. "Standard" connotes code, standard, recommended practice, or guide.
2. A representative includes an employee.
3. While these classifications will be used by the Standards Council to achieve a balance for Technical Committees, the Standards Council may determine that new classifications of members or unique interests need representation in order to foster the best possible committee deliberations on any project. In this connection, the Standards Council may make appointments as it deems appropriate in the public interest, such as the classification of "Utilities" in the National Electrical Code Committee.
4. Representatives of subsidiaries of any group are generally considered to have the same classification as the parent organization.

Copyright National Fire Protection Association
Provided by IHS under license with NFPA
No reproduction or networking permitted without license from IHS
Not for Resale

NFPA Technical Committee Document Proposal Form

NOTE: All Proposals must be received by 5:00 pm EST/EDST on the published Proposal Closing Date.

For further information on the standards-making process, please contact the Codes and Standards Administration at 617-984-7249 or visit www.nfpa.org/codes.

For technical assistance, please call NFPA at 1-888-344-3555.

FOR OFFICE USE ONLY

Log #:

Date Rec'd:

Please indicate in which format you wish to receive your ROP/ROC ☐ **electronic** ☐ **paper** ☒ **download**
(Note: If choosing the download option, you must view the ROP/ROC from our website; no copy will be sent to you.)

Date April 1, 200X **Name** John J. Doe **Tel. No.** 716-555-1234

Company Air Canada Pilot's Association

Street Address 123 Summer Street Lane **City** Lewiston **State** NY **Zip** 14092

Please indicate organization represented (if any)

1. (a) NFPA Document Title National Fuel Gas Code **NFPA No. & Year** 54, 200X Edition

(b) Section/Paragraph 3.3

2. Proposal Recommends (check one): ☐ new text ☒ revised text ☐ deleted text

3. Proposal (include proposed new or revised wording, or identification of wording to be deleted): [Note: Proposed text should be in legislative format; i.e., use underscore to denote wording to be inserted (inserted wording) and strike-through to denote wording to be deleted (~~deleted wording~~).]

Revise definition of effective ground-fault current path to read:

3.3.78 Effective Ground-Fault Current Path. An intentionally constructed, permanent, low impedance electrically conductive path designed and intended to carry ~~underground~~ electric fault current ~~conditions~~ from the point of a ground fault on a wiring system to the electrical supply source.

4. Statement of Problem and Substantiation for Proposal: (Note: State the problem that would be resolved by your recommendation; give the specific reason for your Proposal, including copies of tests, research papers, fire experience, etc. If more than 200 words, it may be abstracted for publication.)

Change uses proper electrical terms.

5. Copyright Assignment

(a) ☐ **I am the author of the text or other material (such as illustrations, graphs) proposed in this Proposal.**

(b) ☒ **Some or all of the text or other material proposed in this Proposal was not authored by me. Its source is as follows** (please identify which material and provide complete information on its source)**:**

ABC Co.

I agree that any material that I author, either individually or with others, in connection with work performed by an NFPA Technical Committee shall be considered to be works made for hire for the NFPA. To the extent that I retain any rights in copyright as to such material, or as to any other material authored by me that I submit for the use of an NFPA Technical Committee in the drafting of an NFPA code, standard, or other NFPA document, I hereby grant and assign all and full rights in copyright to the NFPA. I further agree and acknowledge that I acquire no rights in any publication of the NFPA and that copyright and all rights in materials produced by NFPA Technical Committees are owned by the NFPA and that the NFPA may register copyright in its own name.

Signature (Required)

PLEASE USE SEPARATE FORM FOR EACH PROPOSAL • NFPA Fax: (617) 770-3500

Mail to: Secretary, Standards Council, National Fire Protection Association, 1 Batterymarch Park, Quincy, MA 02169-7471

2/5/2007

SAMPLE

Copyright National Fire Protection Association
Provided by IHS under license with NFPA
No reproduction or networking permitted without license from IHS
Not for Resale

NFPA Technical Committee Document Proposal Form

NOTE: All Proposals must be received by 5:00 pm EST/EDST on the published Proposal Closing Date.

For further information on the standards-making process, please contact the Codes and Standards Administration at 617-984-7249 or visit www.nfpa.org/codes.

For technical assistance, please call NFPA at 1-888-344-3555.

FOR OFFICE USE ONLY

Log #: _____

Date Rec'd: _____

Please indicate in which format you wish to receive your ROP/ROC ☐ electronic ☐ paper ☐ download
(Note: If choosing the download option, you must view the ROP/ROC from our website; no copy will be sent to you.)

Date _____ **Name** _____ **Tel. No.** _____

Company _____

Street Address _____ **City** _____ **State** _____ **Zip** _____

Please indicate organization represented (if any) _____

1. (a) NFPA Document Title _____ **NFPA No. & Year** _____

(b) Section/Paragraph _____

2. Proposal Recommends (check one): ☐ new text ☐ revised text ☐ deleted text

3. Proposal (include proposed new or revised wording, or identification of wording to be deleted): [Note: Proposed text should be in legislative format; i.e., use underscore to denote wording to be inserted (inserted wording) and strike-through to denote wording to be deleted (~~deleted wording~~).]

4. Statement of Problem and Substantiation for Proposal: (Note: State the problem that would be resolved by your recommendation; give the specific reason for your Proposal, including copies of tests, research papers, fire experience, etc. If more than 200 words, it may be abstracted for publication.)

5. Copyright Assignment

(a) ☐ I am the author of the text or other material (such as illustrations, graphs) proposed in this Proposal.

(b) ☐ Some or all of the text or other material proposed in this Proposal was not authored by me. Its source is as follows (please identify which material and provide complete information on its source)**:**

_____

I agree that any material that I author, either individually or with others, in connection with work performed by an NFPA Technical Committee shall be considered to be works made for hire for the NFPA. To the extent that I retain any rights in copyright as to such material, or as to any other material authored by me that I submit for the use of an NFPA Technical Committee in the drafting of an NFPA code, standard, or other NFPA document, I hereby grant and assign all and full rights in copyright to the NFPA. I further agree and acknowledge that I acquire no rights in any publication of the NFPA and that copyright and all rights in materials produced by NFPA Technical Committees are owned by the NFPA and that the NFPA may register copyright in its own name.

Signature (Required) _____

PLEASE USE SEPARATE FORM FOR EACH PROPOSAL • NFPA Fax: (617) 770-3500

Mail to: Secretary, Standards Council, National Fire Protection Association, 1 Batterymarch Park, Quincy, MA 02169-7471

2/5/2007

Copyright National Fire Protection Association
Provided by IHS under license with NFPA
No reproduction or networking permitted without license from IHS
Not for Resale