NFPA 1936

Standard on Powered Rescue Tools

2005 Edition

NFPA, 1 Batterymarch Park, Quincy, MA 02169-7471
An International Codes and Standards Organization

Copyright National Fire Protection Association
Provided by IHS under license with NFPA
No reproduction or networking permitted without license from IHS

Not for Resale

IMPORTANT NOTICES AND DISCLAIMERS CONCERNING NFPA DOCUMENTS

NOTICE AND DISCLAIMER OF LIABILITY CONCERNING THE USE OF NFPA DOCUMENTS

NFPA codes, standards, recommended practices, and guides, of which the document contained herein is one, are developed through a consensus standards development process approved by the American National Standards Institute. This process brings together volunteers representing varied viewpoints and interests to achieve consensus on fire and other safety issues. While the NFPA administers the process and establishes rules to promote fairness in the development of consensus, it does not independently test, evaluate, or verify the accuracy of any information or the soundness of any judgments contained in its codes and standards.

The NFPA disclaims liability for any personal injury, property or other damages of any nature whatsoever, whether special, indirect, consequential or compensatory, directly or indirectly resulting from the publication, use of, or reliance on this document. The NFPA also makes no guaranty or warranty as to the accuracy or completeness of any information published herein.

In issuing and making this document available, the NFPA is not undertaking to render professional or other services for or on behalf of any person or entity. Nor is the NFPA undertaking to perform any duty owed by any person or entity to someone else. Anyone using this document should rely on his or her own independent judgment or, as appropriate, seek the advice of a competent professional in determining the exercise of reasonable care in any given circumstances.

The NFPA has no power, nor does it undertake, to police or enforce compliance with the contents of this document. Nor does the NFPA list, certify, test or inspect products, designs, or installations for compliance with this document. Any certification or other statement of compliance with the requirements of this document shall not be attributable to the NFPA and is solely the responsibility of the certifier or maker of the statement.

--`,,`,,`-`-`,,`,,`,`,,`---

Copyright National Fire Protection Association
Provided by IHS under license with NFPA
No reproduction or networking permitted without license from IHS

Not for Resale

ADDITIONAL NOTICES AND DISCLAIMERS

Updating of NFPA Documents

Users of NFPA codes, standards, recommended practices, and guides should be aware that these documents may be superseded at any time by the issuance of new editions or may be amended from time to time through the issuance of Tentative Interim Amendments. An official NFPA document at any point in time consists of the current edition of the document together with any Tentative Interim Amendments and any Errata then in effect. In order to determine whether a given document is the current edition and whether it has been amended through the issuance of Tentative Interim Amendments or corrected through the issuance of Errata, consult appropriate NFPA publications such as the National Fire Codes® Subscription Service, visit the NFPA website at www.nfpa.org, or contact the NFPA at the address listed below.

Interpretations of NFPA Documents

A statement, written or oral, that is not processed in accordance with Section 6 of the Regulations Governing Committee Projects shall not be considered the official position of NFPA or any of its Committees and shall not be considered to be, nor be relied upon as, a Formal Interpretation.

Patents

The NFPA does not take any position with respect to the validity of any patent rights asserted in connection with any items which are mentioned in or are the subject of NFPA codes, standards, recommended practices, and guides, and the NFPA disclaims liability for the infringement of any patent resulting from the use of or reliance on these documents. Users of these documents are expressly advised that determination of the validity of any such patent rights, and the risk of infringement of such rights, is entirely their own responsibility.

NFPA adheres to applicable policies of the American National Standards Institute with respect to patents. For further information contact the NFPA at the address listed below.

Law and Regulations

Users of these documents should consult applicable federal, state, and local laws and regulations. NFPA does not, by the publication of its codes, standards, recommended practices, and guides, intend to urge action that is not in compliance with applicable laws, and these documents may not be construed as doing so.

Copyrights

This document is copyrighted by the NFPA. It is made available for a wide variety of both public and private uses. These include both use, by reference, in laws and regulations, and use in private self-regulation, standardization, and the promotion of safe practices and methods. By making this document available for use and adoption by public authorities and private users, the NFPA does not waive any rights in copyright to this document.

Use of NFPA documents for regulatory purposes should be accomplished through adoption by reference. The term "adoption by reference" means the citing of title, edition, and publishing information only. Any deletions, additions, and changes desired by the adopting authority should be noted separately in the adopting instrument. In order to assist NFPA in following the uses made of its documents, adopting authorities are requested to notify the NFPA (Attention: Secretary, Standards Council) in writing of such use. For technical assistance and questions concerning adoption of NFPA documents, contact NFPA at the address below.

For Further Information

All questions or other communications relating to NFPA codes, standards, recommended practices, and guides and all requests for information on NFPA procedures governing its codes and standards development process, including information on the procedures for requesting Formal Interpretations, for proposing Tentative Interim Amendments, and for proposing revisions to NFPA documents during regular revision cycles, should be sent to NFPA headquarters, addressed to the attention of the Secretary, Standards Council, NFPA, 1 Batterymarch Park, P.O. Box 9101, Quincy, MA 02269-9101.

For more information about NFPA, visit the NFPA website at www.nfpa.org.

Copyright National Fire Protection Association
Provided by IHS under license with NFPA
No reproduction or networking permitted without license from IHS
Not for Resale

Copyright © 2005, National Fire Protection Association, All Rights Reserved

NFPA 1936

Standard on

Powered Rescue Tools

2005 Edition

This edition of NFPA 1936, *Standard on Powered Rescue Tools,* was prepared by the Technical Committee on Fire Department Rescue Tools and acted on by NFPA at its November Association Technical Meeting held November 13–17, 2004, in Miami Beach, FL. It was issued by the Standards Council on January 14, 2005, with an effective date of February 7, 2005, and supersedes all previous editions.

This edition of NFPA 1936 was approved as an American National Standard on February 7, 2005.

Origin and Development of NFPA 1936

Work on this document began in a subcommittee of the Technical Committee on Fire Department Equipment. In October 1992, the NFPA Standards Council organized a new committee, the Technical Committee on Fire Department Rescue Tools, which took over the responsibility for developing the document. The first edition of NFPA 1936 was presented to the NFPA membership at the Annual Meeting in Baltimore, MD, on 19 May 1999, and issued by the Standards Council on 22 July 1999, with an effective date of 13 August 1999.

This second edition of NFPA 1936 incorporates the new *Manual of Style for NFPA Technical Committee Documents* format for codes and standards that has caused the renumbering of some chapters, the relocation of another chapter, and the addition of a new chapter. The title of the document has changed to "Powered Rescue Tools," eliminating the "system" concept of the first edition. The standard addresses the tools and components as individual items and not as a "system" approach. All design, performance, and testing requirements have been reviewed and refined as necessary.

This second edition was presented to the Association membership at the 2004 November meeting in Miami Beach, FL, on 17 November 2004, and issued by the Standards Council with an effective date of 7 February 2005.

In Memoriam, 11 September 2001

We pay tribute to the 343 members of FDNY who gave their lives to save civilian victims on 11 September 2001, at the World Trade Center. They are true American heroes in death, but they were also American heroes in life. We will keep them in our memory and in our hearts. They are the embodiment of courage, bravery, and dedication. May they rest in peace.

Copyright National Fire Protection Association
Provided by IHS under license with NFPA
No reproduction or networking permitted without license from IHS
Not for Resale

Technical Committee on Fire Department Rescue Tools

Lewis R. Austin III, *Chair*
Champion Township Fire Department, OH [E]

William Giff Swayne, *Secretary*
Holmatro, Inc., MD [M]

Craig Aberbach, City of Cape Coral Fire Department, FL [U]
Michael J. Amoroso, Amoroso Engineering Company Inc., IL [M]
Christopher H. Born, Kempsville Volunteer Rescue Squad, Inc., VA [E]
Mark P. Dempsey, Wheaton Volunteer Rescue Squad, MD [U]
Thomas W. Gaylord, Township of Morris Fire Department, NJ [U]
John D. Marstiller, Harrods Creek Fire Protection District, KY [U]
John D. McCarthy, Power Hawk Technologies, Inc., NJ [M]
Robert L. McKee, Chicago Fire Department, IL [U]
Alan J. Painter, Amkus Rescue Systems, IL [M]
Stephen R. Sanders, Safety Equipment Institute (SEI), VA [RT]
Daniel T. Smith, Illinois Emergency Management Agency, IL [SE]
Rep. Illinois Fire Service Institute/University of Illinois
Dale W. Soos, Intertek, NY [RT]
Win Van Basten, Willow Grove, PA [SE]

Alternates

Tom Bottoms, Phoenix Rescue Equipment Inc., TN [M]
(Alt. to Phoenix Rescue Equipment Rep.)
Alex J. Duresa, Underwriters Laboratories Inc., IL [RT]
(Alt. to UL Rep.)
Eric D. Marquess, Holmatro, Inc., MD [M]
(Alt. to W. G. Swayne)
Robert W. O'Gorman, Intertek, NY [RT]
(Alt. to D. W. Soos)
John L. Zilles, Amkus Rescue Systems, IL [M]
(Alt. to A. J. Painter)

Bruce W. Teele, NFPA Staff Liaison

This list represents the membership at the time the Committee was balloted on the final text of this edition. Since that time, changes in the membership may have occurred. A key to classifications is found at the back of the document.

NOTE: Membership on a committee shall not in and of itself constitute an endorsement of the Association or any document developed by the committee on which the member serves.

Committee Scope: This Committee shall have primary responsibility for documents related to the design, inspection, testing, and use of rescue tools for the fire services.

Copyright National Fire Protection Association
Provided by IHS under license with NFPA
No reproduction or networking permitted without license from IHS
Not for Resale

Contents

Chapter 1 Administration **1936–** 4
1.1 Scope **1936–** 4
1.2 Purpose **1936–** 4
1.3 Application **1936–** 4
1.4 Units **1936–** 4

Chapter 2 Referenced Publications **1936–** 4
2.1 General **1936–** 4
2.2 NFPA Publications **1936–** 4
2.3 Other Publications **1936–** 4

Chapter 3 Definitions **1936–** 5
3.1 General **1936–** 5
3.2 NFPA Official Definitions **1936–** 5
3.3 General Definitions **1936–** 5

Chapter 4 Product Conformance Verification **1936–** 6
4.1 General **1936–** 6
4.2 Product Conformance Verification Program **1936–** 7
4.3 Inspection and Testing **1936–** 7
4.4 Manufacturer's Quality Assurance Program **1936–** 8

Chapter 5 Product Labeling and Information **1936–** 8
5.1 Product Labeling Requirements **1936–** 8
5.2 Powered Rescue Tools and Power Unit ... **1936–** 8
5.3 Cable Assembly and Hose Assembly **1936–** 9
5.4 User Information **1936–** 9

Chapter 6 Design Requirements **1936–**10
6.1 Powered Rescue Tools **1936–**10
6.2 Cable Assembly and Hose Assembly Components **1936–**11
6.3 Power Unit Components **1936–**12

Chapter 7 Performance Requirements **1936–**13
7.1 Rescue Tools **1936–**13
7.2 Hose Assemblies **1936–**15
7.3 Power Units **1936–**15
7.4 Remote Valve Blocks and Hose Reels **1936–**15

Chapter 8 Testing **1936–**16
8.1 Tool Operating Temperature Test **1936–**16
8.2 Spreading Force Test **1936–**16
8.3 Ram Tool Spreading Force Test **1936–**17
8.4 Spreader Tool Pulling Force Test **1936–**17
8.5 Ram Tool Pulling Force Test **1936–**18
8.6 Spreading Force Sudden Power Loss Test **1936–**18
8.7 Pulling Force Sudden Power Loss Test ... **1936–**18
8.8 Dynamic Endurance Test **1936–**19
8.9 Overload Test **1936–**19
8.10 Deadman Control Device Endurance Test **1936–**19
8.11 Safety Relief Device Test **1936–**19
8.12 Ram Bend Test **1936–**20
8.13 Cutting Test **1936–**20
8.14 Cutter Integrity Test **1936–**21
8.15 Impact Resistance Test **1936–**21
8.16 Noise Test **1936–**21
8.17 Incline Operational Test **1936–**21
8.18 Power Unit Pressure Test **1936–**21
8.19 Power Unit Pressure Relief and Automatic Limiting Device Test **1936–**21
8.20 Power Unit Dump Valve Test **1936–**22
8.21 Power Unit Endurance Test **1936–**22
8.22 Directional Valve Endurance Test **1936–**22
8.23 Remote Valve Block Endurance Test **1936–**22
8.24 Hose Reel Endurance Test **1936–**22
8.25 Hose Assembly Proof Pressure Test **1936–**22

Annex A Explanatory Material **1936–**22

Annex B Informational References **1936–**24

Index **1936–**25

Copyright National Fire Protection Association
Provided by IHS under license with NFPA
No reproduction or networking permitted without license from IHS
Not for Resale

NFPA 1936

Standard on

Powered Rescue Tools

2005 Edition

IMPORTANT NOTE: This NFPA document is made available for use subject to important notices and legal disclaimers. These notices and disclaimers appear in all publications containing this document and may be found under the heading "Important Notices and Disclaimers Concerning NFPA Documents." They can also be obtained on request from NFPA or viewed at www.nfpa.org/disclaimers.

NOTICE: An asterisk (*) following the number or letter designating a paragraph indicates that explanatory material on the paragraph can be found in Annex A.

Information on referenced publications can be found in Chapter 2 and Annex B.

Chapter 1 Administration

1.1 Scope.

1.1.1 This standard shall specify the minimum requirements for the design, performance, testing, and product conformance verification of powered rescue tools and components.

1.1.2 This standard shall specify the requirements for spreader, ram, cutter, and combination powered rescue tools.

1.1.3 This standard shall also specify the requirements for cable assemblies, hose assemblies, and power unit components for powered rescue tools.

1.1.4 This standard shall not specify any requirements for any accessories for powered rescue tools or components.

1.1.5 This standard shall not be construed as addressing all of the safety concerns, if any, associated with its use. It shall be the responsibility of the persons and organizations that use this standard to establish safety and health practices and determine the applicability of regulatory limitations prior to use of this standard.

1.1.6 Nothing herein shall restrict any jurisdiction from specifying powered rescue tool systems and components that exceed the minimum requirements of this standard.

1.1.7 Nothing herein shall restrict any manufacturer from producing powered rescue tools and components that exceed the minimum requirements of this standard.

1.2 Purpose.

1.2.1 The purpose of this standard shall be to establish minimum performance requirements for powered rescue tools and components that are utilized by emergency services personnel to facilitate the extrication of victims from entrapment.

1.2.2 Controlled laboratory environmental and physical tests are used to determine compliance with the performance requirements of this standard only; however, such tests shall not be deemed as establishing the performance levels of powered rescue tools and components for all situations.

1.2.3 This standard is not intended to serve as a detailed manufacturing or purchase specification but shall be permitted to be referenced in purchase specifications as minimum acceptable requirements.

1.3 Application.

1.3.1 This standard shall apply to the design, manufacturing, and product conformance verification of newly manufactured powered rescue tools and components.

1.3.2 The requirements of this standard shall not apply to accessories that might be attached to powered rescue tools or components.

1.3.3 This standard shall not apply to manually powered rescue tools and manually powered rescue tool components.

1.3.4 This standard shall not apply to small multipurpose tools including, but not limited to, saws, drills, chisels, pry bars, shoring systems, and similar tools.

1.3.5 This standard shall not apply to powered rescue tools and components that are manufactured prior to the NFPA effective date of this standard.

1.3.6 This standard shall not apply to powered rescue tools that are manufactured in accordance with other specifications or standards of other organizations.

1.4 Units.

1.4.1 Values for measurement in this standard are followed by an equivalent in parentheses, but only the first stated value shall be regarded as the requirement.

1.4.2 Equivalent values in parentheses shall not be considered as the requirement as these values are approximate.

Chapter 2 Referenced Publications

2.1 General. The documents or portions thereof listed in this chapter are referenced within this standard and shall be considered part of the requirements of this document.

2.2 NFPA Publications. National Fire Protection Association, 1 Batterymarch Park, Quincy, MA 02169-7471.

NFPA 30, *Flammable and Combustible Liquids Code,* 2003 edition.

NFPA 1971, *Standard on Protective Ensemble for Structural Fire Fighting,* 2000 edition.

2.3 Other Publications.

2.3.1 ANSI Publication. American National Standards Institute, Inc., 25 West 43rd Street, 4th floor, New York, NY 10036.

ANSI S12.36, *Standard Survey Methods for the Determination of Sound Pressure Levels of Noise Sources*, 1990 edition.

2.3.2 ISO Publications. International Organization for Standardization, 1, rue de Varembe, Case postale 56, CH-1211 Geneve 20, Switzerland.

ISO 65, *General requirements for bodies operating product certification systems*, 1996.

ISO 17011, *General requirements for accreditation bodies accrediting conformity assessment bodies,* 2003.

ISO 17025, *General requirements for the competence of testing and calibration laboratories,* 1999.

ISO 9001, *Quality management systems - requirements,* 2000.

Copyright National Fire Protection Association
Provided by IHS under license with NFPA
No reproduction or networking permitted without license from IHS
Not for Resale

2.3.3 UL Publications. Underwriters Laboratories Inc., 333 Pfingsten Road, Northbrook, IL 60062-2096.

UL 745–1, *Standard for Safety for Portable Electric Tools,* 1995.

UL 745–3, *Standard for Safety for Portable Battery Operated Tools,* 1995.

UL 969, *Standard for Marking and Labeling Systems,* 2001.

Chapter 3 Definitions

3.1 General. The definitions contained in this chapter shall apply to the terms used in this standard. Where terms are not defined in this chapter or within another chapter, they shall be defined using their ordinarily accepted meanings within the context in which they are used. *Merriam-Webster's Collegiate Dictionary,* 11th edition, shall be the source for the ordinarily accepted meaning.

3.2 NFPA Official Definitions.

3.2.1* Approved. Acceptable to the authority having jurisdiction.

3.2.2* Authority Having Jurisdiction (AHJ). An organization, office, or individual responsible for enforcing the requirements of a code or standard, or for approving equipment, materials, an installation, or a procedure.

3.2.3 Labeled. Equipment or materials to which has been attached a label, symbol, or other identifying mark of an organization that is acceptable to the authority having jurisdiction and concerned with product evaluation, that maintains periodic inspection of production of labeled equipment or materials, and by whose labeling the manufacturer indicates compliance with appropriate standards or performance in a specified manner.

3.2.4* Listed. Equipment, materials, or services included in a list published by an organization that is acceptable to the authority having jurisdiction and concerned with evaluation of products or services, that maintains periodic inspection of production of listed equipment or materials or periodic evaluation of services, and whose listing states that either the equipment, material, or service meets appropriate designated standards or has been tested and found suitable for a specified purpose.

3.2.5 Shall. Indicates a mandatory requirement.

3.2.6 Should. Indicates a recommendation or that which is advised but not required.

3.2.7 Standard. A document, the main text of which contains only mandatory provisions using the word "shall" to indicate requirements and which is in a form generally suitable for mandatory reference by another standard or code or for adoption into law. Nonmandatory provisions shall be located in an appendix or annex, footnote, or fine-print note and are not to be considered a part of the requirements of a standard.

3.3 General Definitions.

3.3.1 Accessories. Those items that are attached to the powered rescue tool or to a component but are not necessary for the rescue tool or component to meet the requirements of this standard.

3.3.2 Cable Assembly. A powered rescue tool component consisting of the power cable with all permanently attached connectors that connect the powered rescue tool to the power unit.

3.3.3 Combination Tool. A powered rescue tool that is capable of at least spreading and cutting.

3.3.4 Compliant. Verified as meeting or exceeding all applicable requirements of this standard.

3.3.5 Components. See 3.3.29, Powered Rescue Tool Components.

3.3.6 Continual. With respect to the testing of a powered rescue tool, a test sequence performed with pauses or interruptions.

3.3.7 Continuous. With respect to the testing of a powered rescue tool, a test sequence performed without any pauses or interruptions for any purpose.

3.3.8 Creep. Unintended movement.

3.3.9 Cutter. A powered rescue tool with at least one movable blade that is used to cut, shear, or sever material.

3.3.10 Cycle. See 3.3.26, Operational Cycle.

3.3.11 Dump Valve. A device on a power unit to redirect all of the system flow to the reservoir.

3.3.12 Follow-Up Program. The sampling, inspections, tests, or other measures conducted by the product conformance verification organization on a periodic basis to determine the continued compliance of listed products that are being produced by the manufacturer to the requirements of this standard.

3.3.13 Highest Pulling Force (HPF). The pulling force that is achieved by the powered rescue tool while operating at the rated system input at the position of the arms or piston where the tool generates its greatest amount of force.

3.3.14 Highest Spreading Force (HSF). The spreading force that is achieved by the powered rescue tool while operating at the rated system input at the position of the arms or piston where the tool generates its greatest amount of force.

3.3.15 Hose Assembly. A powered rescue tool component consisting of hose with all permanently attached fittings that connect the powered rescue tool to the power unit.

3.3.16 HPF. See 3.3.13, Highest Pulling Force.

3.3.17 HSF. See 3.3.14, Highest Spreading Force.

3.3.18 Identical Rescue Tools. Powered rescue tools that are produced to the same engineering and manufacturing specifications.

3.3.19 Lowest Pulling Force (LPF). The pulling force that is achieved by the powered rescue tool while operating at the rated system input at the position of the arms or piston where the tool generates its least amount of force.

3.3.20 Lowest Spreading Force (LSF). The spreading force that is achieved by the powered rescue tool while operating at the rated system input at the position of the arms or piston where the tool generates its least amount of force.

3.3.21 LPF. See 3.3.19, Lowest Pulling Force.

3.3.22 LSF. See 3.3.20, Lowest Spreading Force.

3.3.23 Manufacturer. The entity that assembles the compliant product and also maintains the product conformance verification.

3.3.24 Operational Cycle. The movement of the powered rescue tool from the fully closed or retracted position to the fully open or extended position and returned to the fully closed or retracted position.

--`,,```-`-`,,`,,`,`,,`---
Copyright National Fire Protection Association
Provided by IHS under license with NFPA
No reproduction or networking permitted without license from IHS
Not for Resale

3.3.25 Power Unit. A powered rescue tool component consisting of a prime mover and the principal power output device used to power the rescue tool.

3.3.26 Powered Rescue Tool. A rescue tool that receives power from the power unit component and generates the output forces or energy used to perform one or more of the functions of spreading, lifting, holding, crushing, pulling, or cutting.

3.3.27 Powered Rescue Tool Components. Cable assemblies, hose assemblies, power units, hose reels, and remote valve blocks. The individual parts that are assembled in a rescue tool or component, such as seals, screws, valves, and switches, are not themselves considered as components for the purposes of this standard.

3.3.28 Prime Mover. Part of the power unit component; the energy source that drives the principal power output device of the power unit.

3.3.29 Product Conformance Verification. A system whereby a product conformance verification organization determines that a manufacturer has demonstrated the ability to produce a product that complies with the requirements of this standard, authorizes the manufacturer to use a label on listed products that comply with the requirements of this standard, and establishes a follow-up program conducted by the product conformance verification organization as a check on the methods the manufacturer uses to determine continued compliance of labeled and listed products with the requirements of this standard.

3.3.30 Product Conformance Verification Organization. An independent third-party organization that determines product compliance with the requirements of this standard with a labeling/listing/follow-up program.

3.3.31 Product Label. A label or marking affixed to powered rescue tools and components by the manufacturer containing general information, care, maintenance, or similar data. This product label is not the product conformance verification organization's label, symbol, or identifying mark; however, the product conformance verification organization's label, symbol, or identifying mark is attached to it or part of it. *(See also 3.2.3, Labeled.)*

3.3.32 Pulling Force. The force to pull that is generated by a powered rescue tool and that is measured or calculated at the standard production pulling attachment points on the tool.

3.3.33 Ram. A powered rescue tool that has a piston or other type extender that generates extending forces or both extending and retracting forces.

3.3.34 Rated System Input. The maximum input pressure/electrical power at which the powered rescue tool is designed to operate.

3.3.35 Rescue Tool. An abbreviation for powered rescue tool.

3.3.36 Rescue Tool Components. See 3.3.28, Powered Rescue Tool Components.

3.3.37 Spreader. A powered rescue tool that has at least one movable arm that opens to move material.

3.3.38 Spreading Force. The force to push or pull that is generated by a spreader rescue tool and that is measured or calculated at the very tips of the spreader arms or ram.

3.3.39 System Input. The input pressure or electrical power that the powered rescue tool is subjected to at any given moment.

3.3.40 Tool. An abbreviation for powered rescue tool.

3.3.41 Vendor Confirmation. A written statement by the original manufacturer of a component that states the specification or performance range, or both, of the component.

Chapter 4 Product Conformance Verification

4.1 General.

4.1.1 The process of product conformance verification for powered rescue tools and components as being compliant with NFPA 1936 shall meet the requirements of Section 4.1, General; Section 4.2, Product Conformance Verification Program; Section 4.3, Inspection and Testing; and Section 4.4, Manufacturer's Quality Assurance Program.

4.1.2 All compliant powered rescue tools and components that are labeled as being compliant with this standard shall meet or exceed all applicable requirements specified in this standard and shall be certified.

4.1.3 All product conformance verification shall be performed by a product conformance verification organization that meets at least the requirements specified in Section 4.2, Product Conformance Verification Program, and that is accredited for powered rescue tools in accordance with ISO 65, *General requirements for bodies operating product certification systems.* The accreditation shall be issued by an accreditation body operating in accordance with ISO 17011, *General requirements for accreditation bodies accrediting conformity assessment bodies.*

4.1.4 Manufacturers shall not claim compliance with portions or segments of the requirements of this standard and shall not use the NFPA name or the name or identification of this standard, NFPA 1936, in any statements about their respective product(s) unless the product(s) is certified as compliant to this standard.

4.1.5 All individual compliant powered rescue tools and components shall be labeled and listed.

4.1.6 All individual compliant powered rescue tools and components shall also have a product label that meets the requirements specified in Section 5.1, Product Labeling Requirements.

4.1.7* The product conformance verification organization's label, symbol, or identifying mark shall be part of the product label, shall be attached to the product label, or shall be immediately adjacent to the product label.

4.1.8 The product conformance verification organization shall not issue any new verifications to the 1999 edition of this standard on or after the NFPA effective date for the 2005 edition, which is 7 February 2005.

4.1.9 The product conformance verification organization shall not permit any manufacturer to continue to label any powered rescue tools and components that are certified as compliant with the 1999 edition of this standard on or after 1 September 2005.

4.1.10 The product conformance verification organization shall require manufacturers to remove all product conformance verification labels and product labels indicating compliance with the 1999 edition of this standard from all powered rescue tools and components that are under the control of the manufacturer on 1 September 2005, and the product conformance verification organization shall verify this action is taken.

Copyright National Fire Protection Association
Provided by IHS under license with NFPA
No reproduction or networking permitted without license from IHS
Not for Resale

4.2 Product Conformance Verification Program.

4.2.1* The product conformance verification organization shall not be owned or controlled by manufacturers or vendors of the product being certified.

4.2.2 The product conformance verification organization shall be primarily engaged in product conformance verification work and shall not have a monetary interest in the product's ultimate profitability.

4.2.3 The product conformance verification organization shall be accredited for powered rescue tools in accordance with ISO 65, *General requirements for bodies operating product certification systems*. The accreditation shall be issued by an accreditation body operating in accordance with ISO 17011, *General requirements for accreditation bodies accrediting conformity assessment bodies*.

4.2.4 The product conformance verification organization shall refuse to certify products to this standard that do not comply with all applicable requirements of this standard.

4.2.5* The contractual provisions between the product conformance verification organization and the manufacturer shall specify that product conformance verification is contingent on compliance with all applicable requirements of this standard.

4.2.5.1 The product conformance verification organization shall not offer or confer any conditional, temporary, or partial product conformance verifications.

4.2.5.2 Manufacturers shall not be authorized to use any label of or reference to the product conformance verification organization on products that are not compliant with all applicable requirements of this standard.

4.2.6* The product conformance verification organization shall have laboratory facilities and equipment available for conducting proper tests to determine product compliance.

4.2.6.1 The product conformance verification organization laboratory facilities shall have a program in place and functioning for calibration of all instruments, and procedures shall be in use to ensure proper control of all testing.

4.2.6.2 The product conformance verification organization laboratory facilities shall follow good practice regarding the use of laboratory manuals, form data sheets, documented calibration and calibration routines, performance verification, proficiency testing, and staff qualification and training programs.

4.2.7 The product conformance verification organization shall require the manufacturer to establish and maintain a quality assurance program that meets the requirements of Section 4.4, Manufacturer's Quality Assurance Program. The product conformance verification organization shall verify the manufacturer's quality assurance program to ensure that the quality assurance program provides continued product compliance with this standard.

4.2.8 The product conformance verification organization and the manufacturer shall evaluate any changes affecting the design, construction, or materials of the compliant product to determine its continued conformance to this standard.

4.2.9* The product conformance verification organization shall have a follow-up inspection program of the manufacturing facilities of the compliant product with at least two random and unannounced visits per 12-month period.

4.2.9.1 As part of the follow-up inspection program, the product conformance verification organization shall select sample compliant product at random from the manufacturer's production line, from the manufacturer's in-house stock, or from the open market.

4.2.9.2 Sample product shall be evaluated by the product conformance verification organization to verify the product's continued compliance.

4.2.10 The product conformance verification organization shall have in place a series of procedures that address report(s) of situation(s) in which a compliant product is subsequently found to be hazardous.

4.2.11 The product conformance verification organization's operating procedures shall provide a mechanism for the manufacturer to appeal decisions. The procedures shall include the presentation of information from both sides of a controversy to a designated appeals panel.

4.2.12 The product conformance verification organization shall be in a position to use legal means to protect the integrity of its name and label. The name and label shall be registered and legally defended.

4.3 Inspection and Testing.

4.3.1 For product conformance verification of powered rescue tools and components, the product conformance verification organization shall conduct both inspection and testing as specified in this section.

4.3.2 All inspections, evaluations, conditioning, and testing for product conformance verification shall be conducted by a product conformance verification organization's testing laboratory that is accredited in accordance with the requirements of ISO 17025, *General requirements for the competence of testing and calibration laboratories*.

4.3.2.1 The product conformance verification organization's testing laboratory's scope of accreditation to ISO 17025, *General requirements for the competence of testing and calibration laboratories*, shall encompass testing of powered rescue tools.

4.3.2.2 The accreditation of a product conformance verification organization's testing laboratory shall be issued by an accreditation body operating in accordance with ISO 17011, *General requirements for accreditation bodies accrediting conformity assessment bodies*.

4.3.3 Sampling levels for testing and inspection shall be established by the product conformance verification organization and the manufacturer to ensure a reasonable and acceptable reliability at a reasonable and acceptable confidence level that products certified to this standard are compliant, unless such sampling levels are specified herein.

4.3.4 Inspection by the product conformance verification organization shall include a review of all product labels to ensure that all required label attachments, compliance statements, product conformance verification statements, and other product information are at least as specified for the powered rescue tools and components in Section 5.1, Product Labeling Requirements.

4.3.5 Inspection by the product conformance verification organization shall include an evaluation of any symbols and pictorial graphic representations used on product labels or in user information, as permitted by 5.1.6 and 5.4.4, to ensure that the symbols are clearly explained in the product's user information package.

Copyright National Fire Protection Association
Provided by IHS under license with NFPA
No reproduction or networking permitted without license from IHS
Not for Resale

4.3.6 Inspection by the product conformance verification organization shall include a review of the user information required by Section 5.4, User Information, to ensure that the information has been developed and is available.

4.3.7 Inspection by the product conformance verification organization for determining compliance with the design requirements specified in Chapter 6 shall be performed on whole or complete products.

4.3.8 Testing to determine product compliance with the performance requirements specified in Chapter 7 shall be conducted by the product conformance verification organization in accordance with the specified testing requirements of Chapter 8.

4.3.8.1 Testing shall be performed on whole powered rescue tools and components.

4.3.8.2 The product conformance verification organization also shall be permitted to use specimens representative of materials and components used in the actual construction of the powered rescue tools and components.

4.3.9 The product conformance verification organization shall accept from the manufacturer, for evaluation and testing for product conformance verification, only products or product components that are the same in every respect to the actual final product or product component.

4.3.10 The product conformance verification organization shall not allow any modifications, pretreatment, conditioning, or other such special processes of the product or any product component prior to the submission of the product or product component for evaluation and testing by the product conformance verification organization.

4.3.11 The product conformance verification organization shall not allow the substitution, repair, or modification, other than as specifically permitted herein, of any product or any product component during testing.

4.3.12 The product conformance verification organization shall not allow test specimens that have been conditioned and tested for one method to be reconditioned and tested for another test method unless specifically permitted in the second test method.

4.3.13 Any change in the design, construction, or materials of a compliant product shall necessitate new inspection and testing to verify conformance to all applicable requirements of this standard that the product conformance verification organization determines can be affected by such change. This product conformance verification shall be conducted before labeling the modified product as being compliant with this standard.

4.4 Manufacturer's Quality Assurance Program.

4.4.1* The manufacturer shall be registered to ISO 9001, *Quality management systems - requirements*.

4.4.2 The operation of the quality assurance program shall evaluate and test compliant product production against this standard to ensure production remains in compliance.

Chapter 5 Product Labeling and Information

5.1 Product Labeling Requirements.

5.1.1 All product labels for powered rescue tools and for power unit components shall also meet the requirements specified in Section 5.2, Powered Rescue Tools and Power Unit Components.

5.1.2 All product labels for cable assembly components and for hose assembly components shall also meet the requirements specified in Section 5.3, Cable Assembly and Hose Assembly Components.

5.1.3 On all product labels, the font size for the product conformance verification organization's label, symbol, or identifying mark and the compliance statement shall be at least 2 mm (3⁄32 in.) high.

5.1.4 On all product labels, the font size for the itemized information list that follows the compliance statement, including any symbols, shall be at least 2 mm (3⁄32 in.) high.

5.1.5 All product labels shall have the text printed at least in English.

5.1.6 All product labels shall be permitted to use symbols and other pictorial graphic representations to supplement worded statements on the product labels where those symbols and pictorial graphic representations are clearly explained in the user information.

5.1.7 All product labels shall meet the requirements of UL 969, *Standard for Marking and Labeling Systems*, for resistance to damage from temperatures between –35°C and 71°C (–30°F and 160°F) and exposure to oil, fuel, water, and the hydraulic fluids used in the rescue tools.

5.1.8 Where any required product labels are self-adhesive, the label material shall be evaluated for outdoor use.

5.2 Powered Rescue Tools and Power Unit.

5.2.1 Each powered rescue tool and each power unit shall have a product label permanently and conspicuously attached to the tool or system.

5.2.2 Each product label shall have the product conformance verification organization's label, symbol, or identifying mark and at least the following compliance statement legibly printed on the product label:

"THIS (insert "POWERED RESCUE TOOL" or "POWER UNIT" as applicable) MEETS THE REQUIREMENTS OF NFPA 1936, *STANDARD ON POWERED RESCUE TOOLS,* 2005 EDITION. DO NOT REMOVE THIS LABEL"

5.2.3 The following information shall also be printed on the product label following the compliance statement specified in 5.2.2:

(1) Manufacturer's name, identification, or designation
(2) Product identification number, or lot number, or serial number
(3) Month and year of manufacture (not coded)
(4) Model name, number, or design
(5) Rated system pressure, where applicable
(6) Manufacturer's specified hydraulic fluid for power unit, where applicable
(7) Fluid capacity of the hydraulic reservoir of the power unit, where applicable
(8) Operating voltage and current type, where applicable
(9) Operating amperage at no load, where applicable
(10) Operating amperage at maximum load, where applicable

Copyright National Fire Protection Association
Provided by IHS under license with NFPA
No reproduction or networking permitted without license from IHS
Not for Resale

5.2.4 More than one label piece shall be permitted in order to carry all statements and information required of the product label; however, all label pieces comprising the entire product label shall be located adjacent to each other.

5.3 Cable Assembly and Hose Assembly.

5.3.1 Each cable assembly and each hose assembly shall have a product label conspicuously and permanently stamped, bonded, or embossed on the cable or hose.

5.3.2 Each product label specified in 5.3.1 shall have the product conformance verification organization's label, symbol, or identifying mark and at least the following compliance statement legibly printed as the product label: "MEETS NFPA 1936 (2005 ED.)."

5.3.3 In addition, each cable assembly and each hose assembly shall also have a product label conspicuously attached to it.

5.3.3.1 This additional product label shall be permitted to be permanently attached to the assembly or configured as a hang tag attached to the assembly.

5.3.3.2 Where the additional product label is configured as a hang tag as permitted by 5.3.3.1, the hang tag shall be attached to the assembly in a manner that it is not possible to remove the additional product label and use the assembly without being aware of the presence of the label.

5.3.3.3 The additional product label, if a permanently attached label, shall have the following legibly printed on the label: "DO NOT REMOVE THIS LABEL." If label is a hang tag, it shall have the following legibly printed on the label: "DO NOT DISPOSE OF THIS HANG TAG."

5.3.4 The product conformance verification organization's label, symbol, or identifying mark and at least the following statement shall be legibly printed on the additional product label:

"THIS (INSERT "CABLE ASSEMBLY" OR "HOSE ASSEMBLY" HERE) MEETS THE REQUIREMENTS OF NFPA 1936, *STANDARD ON POWERED RESCUE TOOLS*, 2005 EDITION.
DO NOT DISPOSE OF THIS LABEL. STORE THIS LABEL WITH PRODUCT AND USER INFORMATION FOR FUTURE REFERENCE"

5.3.5 The following information shall also be printed legibly on the additional product label following the compliance statement specified in 5.3.4:

(1) Manufacturer's name, identification, or designation
(2) Product identification number, or lot number, or serial number
(3) Month and year of manufacture (not coded)
(4) Model name, number, or design
(5) Rated system pressure, where applicable
(6) Manufacturer's specified hydraulic fluid for power unit, where applicable
(7) Fluid capacity of the hydraulic reservoir of the power unit, where applicable
(8) Operating voltage and current type, where applicable
(9) Operating amperage at no load, where applicable
(10) Operating amperage at maximum load, where applicable

5.3.6 More than one label piece shall be permitted in order to carry all statements and information required of the additional product label; however, all label pieces comprising the entire additional product label shall be attached to each other.

5.4 User Information.

5.4.1 The powered rescue tool manufacturer shall provide training documentation for users with each rescue tool and component.

5.4.2 The documentation shall address at least inspection, maintenance, safe operation, cleaning, decontamination, and storage.

5.4.3 Such documentation shall be permitted to be in the form of printed material, audio visual material, or a combination of both.

5.4.4 Symbols and other pictorial graphic representations shall be permitted to be used to supplement worded statements on the product labels where those symbols and pictorial graphic representations are clearly explained in the user information.

5.4.5 The powered rescue tool manufacturer shall provide a manual(s) with each rescue tool or component. The manual(s) shall provide at least the following information:

(1) Manufacturer's name and address
(2) Country of manufacture
(3) Source for service and technical information
(4) How or where parts can be obtained
(5) Set-up procedures
(6) Operating instructions
(7) Safety considerations
(8) Limitations of use
(9) Inspection procedures
(10) Recommended maintenance procedures
(11) Troubleshooting guide
(12) Manufacturer's warranty
(13) Special requirements or data required by this standard

5.4.6 The powered rescue tool manufacturer shall specify in the manual the length, width, and height dimensions of all powered rescue tools and components to establish the minimum storage dimensions.

5.4.7 The data for the opening distance of cutters and the opening and closing travel distance for other rescue tools as established in 6.1.2.3, 6.1.3.1, 6.1.4.2, 6.1.4.4, and 6.1.5.1 shall be provided in the manual.

5.4.8 The data on the rating for cutting of cutters, as established in 6.1.4.3 and 6.1.5.3, shall be provided in the manual.

5.4.9 The data on HSF, LSF, HPF, and LPF ratings of the rescue tools as established in 7.1.1.4, 7.1.1.5, 7.1.2.5, 7.1.2.6, 7.1.3.6, and 7.1.3.7 shall be provided in the manual.

5.4.10 The weight of the rescue tool or component in a ready-to-use configuration shall be established and published in the manual.

5.4.10.1 The weight of the power unit shall include the hydraulic fluid, fuel, and engine oil, if applicable.

5.4.10.2 The weight of tools and cable assemblies or hose assemblies, including hose reels where provided, shall be determined with the rescue tools and cable or hose assembly attached, and hose assembly filled with hydraulic fluid and configured so that they would be operational by attachment to a power source.

Copyright National Fire Protection Association
Provided by IHS under license with NFPA
No reproduction or networking permitted without license from IHS
Not for Resale

5.4.11 The manufacturer of the power unit shall provide copies of any owner's manuals that are provided by the manufacturer of the prime mover.

5.4.12 A material safety data sheet (MSDS) shall be provided for each hydraulic fluid that is supplied for use in the rescue tool and components.

Chapter 6 Design Requirements

6.1 Powered Rescue Tools.

6.1.1 Requirements for All Powered Rescue Tools.

6.1.1.1 Where hydraulic fluid is used, the manufacturer of seals, valves, and fittings that will come into contact with hydraulic fluid in the rescue tool shall supply the rescue tool manufacturer with written documentation that such seals, valves, and fittings are compatible with the specified hydraulic fluid for the rescue tool and that they will function properly at a maximum hydraulic fluid temperature of 71°C (160°F).

6.1.1.2 Handles and controls shall be located on the rescue tool to allow the rescue tool to be safely carried and operated by personnel wearing gloves that are certified as compliant with the glove requirements of NFPA 1971, *Standard on Protective Ensemble for Structural Fire Fighting*. All handles and controls shall be designed to prevent the user's hand(s) from being caught or crushed by the moving parts of the tool during the tool operation.

6.1.1.3 Rescue tools shall be equipped with a "deadman control" designed to return the controls to the neutral position automatically in the event that the control is released.

6.1.1.3.1 When the control is in the neutral position, the rescue tool shall not operate by itself.

6.1.1.3.2 The operation of the control shall be clearly indicated on the tool.

6.1.1.4 Where the rescue tool has an extension area of the activating piston rod assembly that is greater than 1.5 times the retract area of the piston rod assembly, the rescue tool shall be equipped with a built-in automatic safety relief device to prevent overpressurization.

6.1.1.5 Where hydraulic fluid is used, the hydraulic fluid specified for use with the rescue tool shall not be classified as either a flammable liquid or a combustible fluid unless classified as a Class IIIB combustible liquid in accordance with NFPA 30, *Flammable and Combustible Liquids Code*.

6.1.1.6 Where hydraulic fluid is used, all rescue tool hydraulic fittings and quick-connect couplers shall be rated for at least the rated system input and shall have a safety factor of at least 2:1.

6.1.1.7* Rescue tools shall be equipped with quick-connect couplers. Where hydraulic fluid is used, each female and male quick-connect coupler shall have a check valve that can withstand the specified rated system input when disconnected.

6.1.1.8 All rescue tool quick-connect couplers shall be equipped with a locking feature to prevent accidental uncoupling during operation.

6.1.1.9 All controls that are required for the safe operation of the rescue tool shall be marked to indicate their function.

6.1.1.10 The length, width, and height dimensions of the rescue tool, stated in the commercially printed material as supplied by the tool manufacturer, shall be verified in order to establish minimum storage dimensions.

6.1.1.11 All electric components shall be labeled and listed for the intended application. Where labeled and listed electric components are not available for a specific application, the electric components that are used shall be evaluated for the intended application.

6.1.1.12 Where rescue tools utilize electric power, such rescue tools shall comply with the applicable and appropriate electrical safety requirements of UL-745–1, *Standard for Safety for Portable Electric Tools*, and UL 745–3, *Standard for Safety for Portable Battery Operated Tools*.

6.1.1.13 All rescue tool electrical connectors shall be rated to handle the electrical current realized when the system is operating at rated system input.

6.1.1.14 A switch or other control device shall be acceptable for the application, with voltage and amperage ratings not less than the corresponding values of the load that it controls.

6.1.1.15 Electrical parts of the rescue tool shall be so located or enclosed that protection against unintentional contact with non-insulated live parts will be provided.

6.1.1.16 Strain relief shall be provided to prevent a mechanical stress on a flexible cord from being transmitted to terminals, splicing, or internal wiring.

6.1.1.17 Wiring shall be protected from sharp edges, burrs, moving parts, and other conditions that might cause abrasion of the insulation of conductors.

6.1.1.18 The electric motor of the rescue tool shall drive the maximum intended load of the tool without introducing risk of fire, electric shock, or injury to persons.

6.1.1.19 Where an enclosure as part of the rescue tool or rescue tool component is provided for a battery or battery cell, the enclosure shall be vented to permit the circulation of air for dispersion of gases that can be generated under abnormal battery or battery cell or charging conditions.

6.1.1.20 Where an enclosure as part of the rescue tool or rescue tool component is provided for a battery or battery cell, the enclosure shall be provided with means of heat transfer, such as ventilation openings or heat sinks, located so as to prevent thermal runaway of the battery or battery cell during normal charging at the maximum allowable ambient temperature as specified by the battery or battery cell manufacturer.

6.1.1.21 Where rescue tools use self-contained batteries, such rescue tools shall provide an indicator or other means to visually check the battery's state of charge.

6.1.1.22 All battery or battery pack exposed live terminals shall have protective covers to prevent accidental contact and arcing when not being used.

6.1.2 Additional Requirements for Spreader Rescue Tools.

6.1.2.1 The outside of the spreader arm ends or tips shall be provided with a gripping surface. The gripping surface shall extend the full width of the ends or tips and shall be at least 25 mm (1 in.) in length where measured inward from the ends or tips.

Copyright National Fire Protection Association
Provided by IHS under license with NFPA
No reproduction or networking permitted without license from IHS
Not for Resale

6.1.2.2 Double-acting spreaders that are designed for pulling as well as pushing shall have pulling attachment points.

6.1.2.3 The opening and closing travel distance of the spreader shall be determined at 21°C, ±3°C (70°F, ±5°F).

6.1.2.3.1 The spreader shall be opened to the fullest extent using the rated system input and no external load.

6.1.2.3.2 The distance between the tips shall be measured.

6.1.2.3.3 The spreader shall then be closed to its full closure using the rated system input and no external load.

6.1.2.3.4 The distance between the tips shall again be measured.

6.1.2.3.5 The difference in measurements shall be the travel distance.

6.1.2.3.6 The opening and closing travel distances of the spreader shall be recorded and verified with the data that are supplied by the manufacturer.

6.1.3 Additional Requirements for Ram Rescue Tools.

6.1.3.1 The opening and closing travel distance of the ram shall be determined at 21°C, ±3°C (70°F, ±5°F).

6.1.3.1.1 The ram shall be opened to the fullest extent using the rated system input and no external load.

6.1.3.1.2 The distance from the base to the tip of the ram shall be measured.

6.1.3.1.3 The ram shall then be closed to its full closure using the rated system input and no external load.

6.1.3.1.4 The distance from the base to the tip of the ram shall again be measured.

6.1.3.1.5 The difference in measurements shall be the travel distance.

6.1.3.1.6 The fully retracted and the fully extended lengths of the ram shall be recorded and verified with the data that are supplied by the manufacturer.

6.1.3.2 Rams shall be permitted to pull as well as push. Where rams are designed to pull as well as push, they shall be provided with a pulling attachment point.

6.1.4 Additional Requirements for Combination Rescue Tools.

6.1.4.1 The outer edge of the combination tool arm ends or tips shall be provided with a gripping surface. The gripping surface shall extend the full width of the ends or tips and shall be at least 25 mm (1 in.) in length where measured inward from the ends or tips.

6.1.4.2 All double-acting combination tools that are designed for pulling as well as spreading shall have pulling attachment point(s).

6.1.4.3 The opening distance of the cutter of the combination tool shall be determined at 21°C, ±3°C (70°F, ±5°F).

6.1.4.3.1 The cutter shall be opened to the fullest extent using the rated system input and no external load.

6.1.4.3.2 The opening distance of the cutter shall be measured in a straight line at the tips of the cutter, with the cutter in the fully open position.

6.1.4.3.3 The opening distance of the cutter of the combination tool shall be recorded and verified with the data that are supplied by the manufacturer.

6.1.4.4 The cutter of the combination tool shall be rated for ability to cut specific material with an alphanumeric Level Rating System.

6.1.4.4.1 The numerical performance Levels and the material Categories of the rating system shall be as specified in the performance requirements of 7.1.3.4 and Section 8.13, Cutting Test.

6.1.4.4.2* The Level Rating shall be expressed as A#/B#/C#/D#/E#.

6.1.4.4.2.1 The letters A, B, C, D, and E shall indicate the material Category, and the performance Level number for the specific material Category shall be inserted in place of the # sign.

6.1.4.5 The opening and closing travel distance of the spreader of the combination tool shall be determined at 21°C, ±3°C (70°F, ±5°F).

6.1.4.5.1 The spreader shall be opened to the fullest extent using the rated system input and no external load.

6.1.4.5.2 The opening shall be measured in a straight line on the outside surface of the arms at the farthest projection of the tips.

6.1.4.5.3 The spreader shall then be closed to its full closure using the rated system input and no external load.

6.1.4.5.4 The distance between the tips shall again be measured.

6.1.4.5.5 The difference in measurements shall be the travel distance.

6.1.4.5.6 The opening and closing travel distance of the combination tool spreader shall be recorded and verified with the data that are supplied by the manufacturer.

6.1.5 Additional Requirements for Cutter Rescue Tools.

6.1.5.1 The opening distance of the cutter shall be determined at 21°C, ±3°C (70°F, ±5°F).

6.1.5.1.1 The cutter shall be opened to the fullest extent using the rated system input and no external load.

6.1.5.1.2 The opening distance of the cutter shall be measured in a straight line at the tips of the cutter, with the cutter in the fully open position.

6.1.5.2 The opening distance of the cutter shall be recorded and verified with the data that are supplied by the manufacturer.

6.1.5.3 The cutter shall be rated for ability to cut specific material with an alphanumeric Level Rating System.

6.1.5.3.1 The numerical performance Levels and the material Categories of the rating system shall be as specified in the performance requirements of 7.1.4.2 and Section 8.13, Cutting Test.

6.1.5.3.2* The Level Rating shall be expressed as A#/B#/C#/D#/E#.

6.1.5.3.2.1 The letters A, B, C, D, and E shall indicate the material Category, and the performance Level number for the specific material Category shall be inserted in place of the # sign.

6.2 Cable Assembly and Hose Assembly Components.

6.2.1 The manufacturer of hose and couplers, for hose assembly components, that will come into contact with tool or system hydraulic fluid shall supply the rescue tool manufacturer with

Copyright National Fire Protection Association
Provided by IHS under license with NFPA
No reproduction or networking permitted without license from IHS
Not for Resale

written documentation that such hose and couplers are compatible with the specified hydraulic fluid and that they will function properly at a maximum hydraulic fluid temperature of 71°C (160°F).

6.2.2 Where hydraulic fluid is used, the hydraulic fluid that is specified for use with hose assembly components shall not be classified as either a flammable or combustible liquid unless classified as a Class IIIB combustible liquid in accordance with NFPA 30, *Flammable and Combustible Liquids Code*.

6.2.3 Hose assemblies shall have a minimum safety factor against burst of 200 percent.

6.2.4* All hose hydraulic fittings and quick-connect couplers shall be rated for at least the rated system input and shall have a minimum safety factor of 200 percent.

6.2.5 All hose quick-connect couplers shall be equipped with a locking feature to prevent accidental uncoupling during operation.

6.2.6 Electrical cables and wires for cable assembly components shall be rated to handle the electrical current realized when the system is operating at rated system input.

6.2.7 All quick-connect electrical cables for cable assembly components shall be polarized.

6.2.8 All electrical cables and wires of cable assembly components shall be properly insulated to prevent short circuits.

6.3 Power Unit Components.

6.3.1 Where hydraulic fluid is used, the manufacturer of seals, valves, and fittings that will come into contact with hydraulic fluid in power unit components shall supply the rescue tool manufacturer with written documentation that such seals, valves, and fittings are compatible with the specified hydraulic fluid for the rescue tool and that they will function properly at a maximum hydraulic fluid temperature of 71°C (160°F).

6.3.2 Where hydraulic fluid is used, the hydraulic fluid that is specified for use with power unit components shall not be classified as either a flammable liquid or a combustible liquid unless classified as a Class IIIB combustible liquid in accordance with NFPA 30, *Flammable and Combustible Liquids Code*.

6.3.3 All power unit hydraulic fittings and quick-connect couplers shall be rated for at least the rated system input and shall have a minimum safety factor of 200 percent.

6.3.4 All power unit quick-connect couplers shall be equipped with a locking feature to prevent accidental uncoupling during operation.

6.3.5 Handles and controls shall be located on the power unit to allow the power unit to be safely carried and operated by personnel wearing gloves that are certified as compliant with the glove requirements of NFPA 1971, *Standard on Protective Ensemble for Structural Fire Fighting*.

6.3.6 Each power unit with a continuously operating prime mover shall be equipped with a manually operated pressure dump valve to relieve hose line pressure to allow a tool to be removed or attached while the prime mover is operating at full speed.

6.3.7 All power units shall have all integral control parts properly labeled to ensure ease of identification by the user. The control parts shall include the following:

(1) Start switch or control
(2) Stop switch or control
(3) Choke location and position, if applicable
(4) Throttle, if applicable
(5) Fuel or power shutoff
(6) Open and closed position of any dump valve

6.3.8 All labeling of the prime mover, as specified by the prime mover manufacturer, shall be included.

6.3.9 Where the power unit includes an internal combustion prime mover, the appropriate engine fuel and engine oil reservoirs shall be indicated by a label.

6.3.10 Where the power unit includes an internal combustion prime mover, the manufacturer shall provide a label on the power unit that indicates the proper proportions for the fuel/oil mixture, if applicable.

6.3.11 Where the power unit includes an electric prime mover, the manufacturer shall provide a label on the power unit that indicates the rated horsepower, speed (rpm), amperage, and voltage.

6.3.12 Where the power unit includes a pneumatic prime mover, the manufacturer shall provide a label on the power unit that indicates the proper air pressure and cubic feet per minute necessary to maintain the specified rated power unit performance.

6.3.13 Where the power unit includes a hydraulic prime mover, the manufacturer shall provide a label on the power unit that indicates the proper hydraulic pressure and flow necessary to maintain the specified rated power unit performance.

6.3.14 The rescue tool manufacturer shall provide the purchaser with any maintenance tools that are not commercially available and that are necessary to perform the expected service and maintenance of the power unit.

6.3.15 Where hydraulic fluid is used, a hydraulic fluid reservoir shall be provided and shall have an unobstructed port(s) for adding hydraulic fluid to the reservoir or for draining hydraulic fluid from the reservoir.

6.3.16 Where hydraulic fluid is used, a label shall be provided near the hydraulic fluid fill port that indicates the type of fluid that is specified by the manufacturer for use with the system.

6.3.17 The power unit manufacturer shall label the usable capacity of the hydraulic fluid reservoir.

6.3.18 All power units that weigh in excess of 22.5 kg (49 lb), including fluid, and all power units with an internal combustion engine shall be provided with an unobstructed port at the lowest point of the hydraulic fluid reservoir to allow the reservoir to be emptied when the power unit is in the upright position.

6.3.19 Where hydraulic fluid is used, the hydraulic fluid reservoir shall be provided with a means to visually determine the fluid level. Such means shall include, but not be limited to, dip stick–type indicators, sight gauges, or remote fluid level gauges.

6.3.20 Where hydraulic fluid is used, the power unit hydraulic pump intake shall be provided with a filter screen.

6.3.21 The hydraulic pump shall be equipped with a pressure relief device.

6.3.22 Any pressure relief automatic limiting device shall be designed to deter its adjustment by the user.

Copyright National Fire Protection Association
Provided by IHS under license with NFPA
No reproduction or networking permitted without license from IHS
Not for Resale

6.3.23 All power unit electrical connectors shall be rated to handle the electrical current realized when the system is operating at rated system input.

6.3.24 Where an enclosure as part of the rescue tool or rescue tool component is provided for a battery or battery cell, the enclosure shall be vented to permit the circulation of air for dispersion of gases that can be generated under abnormal battery or battery cell or charging conditions.

6.3.25 Where an enclosure as part of the rescue tool or rescue tool component is provided for a battery or battery cell, the enclosure shall be provided with means of heat transfer, such as ventilation openings or heat sinks, located so as to prevent thermal runaway of the battery or battery cell during normal charging at the maximum allowable ambient temperature as specified by the battery or battery cell manufacturer.

6.3.26 Power units that use batteries shall provide an indicator or other means to visually check the battery's state of charge.

6.3.27 All battery or battery pack exposed live terminals shall have protective covers to prevent accidental contact and arcing when not being used.

6.3.28 All electric components shall be listed and labeled for their intended application. Where listed and labeled electric components are not available for a specific application, the electric components that are used shall be evaluated for the intended application.

6.3.29 All electric prime movers that are rated at greater than 100 V ac shall provide for an electric ground.

6.3.30 All portable internal combustion prime movers that are equipped with an electric starter shall also be equipped with a mechanical starter as a backup.

6.3.31 All portable internal combustion prime movers shall be equipped with a spark-arresting muffler that meets the requirements of the U.S. Department of Agriculture Forest Service and shall also be equipped with a guard to prevent accidental contact with the muffler.

6.3.32 All internal combustion prime mover crankcases shall be equipped with an unobstructed port to allow oil to be drained without removing the internal combustion prime mover from the power unit.

6.3.33 All internal combustion prime movers shall have unobstructed access to the fuel tank fill cap and, where applicable, to the oil cap.

6.3.34 All pneumatic prime movers shall be equipped with an automatically resetting pressure relief device to prevent overpressurizing the pneumatic system.

6.3.35 The length, width, and height dimensions of the power unit, stated in the commercially printed matter as supplied by the rescue tool manufacturer, shall be verified to establish the minimum storage dimensions.

6.3.36 The weight of the ready-to-use power unit, including any necessary attachments, shall be verified against the commercial printed matter that is supplied by the rescue tool manufacturer. The weight of the pumps, hose, and hose reels shall be stated, including the weights of the hydraulic fluid, fuel, and maximum specified quantities of engine oil, if applicable.

Chapter 7 Performance Requirements

7.1 Rescue Tools.

7.1.1 Spreaders.

7.1.1.1 Spreaders shall be tested for operating temperature range as specified in Section 8.1, Tool Operating Temperature Test, and shall operate for five operational cycles, and shall perform without any defect or leak.

7.1.1.2 Spreaders shall be tested for their ability to hold spreading force as specified in Section 8.6, Spreading Force Sudden Power Loss Test, and shall not have a creep value greater than 5 mm (3⁄16 in.) at 9 minutes.

7.1.1.3 Where spreaders are also rated for pulling, those spreaders shall be tested for the ability to hold the pulling force as specified in Section 8.7, Pulling Force Sudden Power Loss Test, and shall not have a creep value greater than 5 mm (3⁄16 in.) at 9 minutes.

7.1.1.4 Spreaders shall be tested for spreading forces generated as specified in Section 8.2, Spreading Force Test, and shall have the spreading force at each of the 10 test points be at least 8900 N (2000 lbf).

7.1.1.4.1 The lowest calculated spreading force of all 10 test points shall be designated as the LSF for that specific tool.

7.1.1.4.2 The highest calculated spreading force of all 10 test points shall be designated as the HSF for that specific tool.

7.1.1.5 Where spreaders are also rated for pulling, those spreaders shall be tested for pulling forces generated as specified in Section 8.4, Spreader Tool Pulling Force Test, and shall have the pulling force at each of the 10 test points be at least 7120 N (1600 lbf).

7.1.1.5.1 The lowest recorded pulling force of all 10 test points shall be designated as the LPF for that specific tool.

7.1.1.5.2 The highest recorded pulling force of all 10 test points shall be designated as the HPF for that specific tool.

7.1.1.6 Spreaders shall be tested for endurance as specified in Section 8.8, Dynamic Endurance Test, and shall not have a creep value greater than 5 mm (3⁄16 in.) at 9 minutes.

7.1.1.7 Spreaders shall be tested for hydrostatic and mechanical overload as specified in Section 8.9, Overload Test, and shall not exhibit any functional damage; shall generate the HSF, ±8 percent, for the tool as determined in 7.1.1.4; and shall have the deadman control automatically return to the neutral position. Where spreaders are also rated for pulling, those spreaders shall also generate the HPF, ±8 percent, for the tool as determined in 7.1.1.5.

7.1.1.8 The deadman control of spreaders shall be tested for endurance as specified in Section 8.10, Deadman Control Device Endurance Test, and the spreader shall generate the HSF, ±8 percent, for the tool as determined in 7.1.1.4. The spreader shall not have a creep value greater than 5 mm (3⁄16 in.) at 9 minutes. Where a spreader is also rated for pulling, it shall also generate the HPF, ±8 percent, for the tool as determined in 7.1.1.5.

7.1.1.9 Where spreaders are equipped with a built-in automatic safety relief device in accordance with 6.1.1.4, spreaders shall be tested for proper functioning of the tool and the built-in safety relief device as specified in Section 8.11, Safety Relief Device Test, and the tool shall operate as specified in 7.1.1.2.

Copyright National Fire Protection Association
Provided by IHS under license with NFPA
No reproduction or networking permitted without license from IHS
Not for Resale

7.1.2 Rams.

7.1.2.1 Rams shall be tested for operating temperature range as specified in Section 8.1, Tool Operating Temperature Test, and shall operate for five operational cycles, and shall perform without any defect or leak.

7.1.2.2 Rams shall be tested for ability to hold spreading force as specified in Section 8.6, Spreading Force Sudden Power Loss Test, and shall not have a creep value greater than 5 mm (3⁄16 in.) at 9 minutes.

7.1.2.3 Where rams are also rated for pulling, those rams shall be tested for ability to hold pulling force as specified in Section 8.7, Pulling Force Sudden Power Loss Test, and shall not have a creep value greater than 5 mm (3⁄16 in.) at 9 minutes.

7.1.2.4 Rams shall be tested for ability to hold spreading force during reconnection of the supply hose or electrical cables as specified in Section 8.6, Spreading Force Sudden Power Loss Test, and shall not have the creep value exceed 6 mm (1⁄4 in.) before spreading begins again.

7.1.2.5 Rams shall be tested for spreading forces generated as specified in Section 8.3, Ram Tool Spreading Force Test, and shall have the spreading force at each of the three test points be at least 8900 N (2000 lbf).

7.1.2.5.1 The lowest recorded spreading force of all three test points shall be designated as the LSF for that specific tool.

7.1.2.5.2 The highest recorded spreading force of all three test points shall be designated as the HSF for that specific tool.

7.1.2.6 Where rams are also rated for pulling, those rams shall be tested for pulling forces generated as specified in Section 8.5, Ram Tool Pulling Force Test, and shall have the pulling force at each of the three test points be at least 7120 N (1600 lbf).

7.1.2.6.1 The lowest recorded pulling force of all three test points shall be designated as the LPF for that specific tool.

7.1.2.6.2 The highest recorded pulling force of all three test points shall be designated as the HPF for that specific tool.

7.1.2.7 Rams shall be tested for endurance as specified in Section 8.8, Dynamic Endurance Test, and shall not have a creep value greater than 5 mm (3⁄16 in.) at 9 minutes.

7.1.2.8 Rams shall be tested for hydrostatic and mechanical overload as specified in Section 8.9, Overload Test, and shall not show any functional damage, shall generate the HSF ±8 percent for the tool as determined in 7.1.2.5, and the deadman control shall automatically return to the neutral position. Where rams are also rated for pulling, those rams shall also generate the HPF ±8 percent for the tool as determined in 7.1.2.6.

7.1.2.9 The deadman control of rams shall be tested for endurance as specified in Section 8.10, Deadman Control Device Endurance Test, and the spreader shall generate the HSF, ±8 percent, for the tool as determined in 7.1.2.5.

7.1.2.9.1 The ram shall not have a creep value greater than 5 mm (3⁄16 in.) at 9 minutes.

7.1.2.9.2 Where rams are also rated for pulling, those rams shall also generate the HPF, ±8 percent, for the tool as determined in 7.1.2.6.

7.1.2.10 Rams shall be tested for bending resistance as specified in Section 8.12, Ram Bend Test, and shall not exhibit any sign of external leakage or functional damage, and shall generate the HSF, ±8 percent, for the tool as determined in 7.1.2.5. Where rams are also rated for pulling, those rams shall also generate the HPF, ±8 percent, for the tool as determined in 7.1.2.6.

7.1.2.11 Where rams are equipped with a built-in automatic safety relief device in accordance with 6.1.1.4, rams shall be tested for proper functioning of the tool and the safety relief device as specified in Section 8.11, Safety Relief Device Test, and the tool shall operate as specified in 7.1.2.2.

7.1.3 Combination Tools.

7.1.3.1 Combination tools shall be tested for operating temperature range as specified in Section 8.1, Tool Operating Temperature Test, and shall operate for five operational cycles, and shall perform without any defect or leak.

7.1.3.2 Combination tools shall be tested for their ability to hold spreading force as specified in Section 8.6, Spreading Force Sudden Power Loss Test, and shall not have a creep value greater than 5 mm (3⁄16 in.) at 9 minutes.

7.1.3.3 Where combination tools are also rated for pulling, those combination tools shall be tested for ability to hold pulling force as specified in Section 8.7, Pulling Force Sudden Power Loss Test, and shall not have a creep value greater than 5 mm (3⁄16 in.) at 9 minutes.

7.1.3.4 Combination tools shall be tested for their ability to cut through the materials as specified in Section 8.13, Cutting Test, and shall cut the material in each material Category at a minimum of Level 1 performance.

7.1.3.4.1 The combination tool cutter shall receive a separate Level Rating for each material Category as determined by 12 pieces of the largest size material, indicated by the highest numerical performance Level, that the cutter is able to cut consecutively.

7.1.3.4.2* The minimum total number of qualified cuts that are required for product conformance verification shall be 60.

7.1.3.4.3 For each cut, the cutter shall completely sever the material in a single continuous motion.

7.1.3.4.4* The Level Rating for the cutter shall be expressed as specified in 6.1.4.4.2.

7.1.3.4.5 It shall be assumed that the cutter is capable of cutting all performance Levels below its rated level in any specific materials Category.

7.1.3.5 All mechanical parts of the cutter shall be tested for product integrity as specified in Section 8.14, Cutter Integrity Test, and shall sustain the maximum load that can be imparted from the force generated by the tool without damage, and the cutter shall operate and cut. For each cut, the cutter shall completely sever the material in a single continuous motion.

7.1.3.6 Combination tools shall be tested for spreading forces generated as specified in Section 8.2, Spreading Force Test, and the spreading force at each of the 10 test points shall be at least 8900 N (2000 lbf).

7.1.3.6.1 The lowest recorded spreading force of all 10 test points shall be designated as the LSF for that specific tool.

7.1.3.6.2 The highest recorded spreading force of all 10 test points shall be designated as the HSF for that specific tool.

7.1.3.7 Combination tools shall be tested for pulling forces generated as specified in Section 8.4, Spreader Tool Pulling Force Test, and shall have the pulling force at each of the 10 test points be at least 7120 N (1600 lbf).

Copyright National Fire Protection Association
Provided by IHS under license with NFPA
No reproduction or networking permitted without license from IHS
Not for Resale

7.1.3.7.1 The lowest recorded pulling force of all 10 test points shall be designated as the LPF for that specific tool.

7.1.3.7.2 The highest recorded pulling force of all 10 test points shall be designated as the HPF for that specific tool.

7.1.3.8 Combination tools shall be tested for endurance as specified in Section 8.8, Dynamic Endurance Test, and shall not have a creep value greater than 5 mm (3⁄16 in.) at 9 minutes.

7.1.3.9 Combination tools shall be tested for overload as specified in Section 8.9, Overload Test, and shall not fail, and shall generate the HSF, ±8 percent, for the tool as determined in 7.1.3.6. Where combination tools are also rated for pulling, those combination tools shall also generate the HPF, ±8 percent, for the tool as determined in 7.1.3.7.

7.1.3.10 The deadman control of combination tools shall be tested for endurance as specified in Section 8.10, Deadman Control Device Endurance Test, and the combination tool shall generate the HSF, ±8 percent, for the tool as determined in 7.1.3.6, and shall not have a creep value greater than 5 mm (3⁄16 in.) at 9 minutes. Where combination tools are also rated for pulling, those combination tools shall also generate the HPF, ±8 percent, for the tool as determined in 7.1.3.7.

7.1.3.11 Where combination tools are equipped with a built-in automatic safety relief device in accordance with 6.1.1.4, combination tools shall be tested for proper functioning of the tool and the safety relief device as specified in Section 8.11, Safety Relief Device Test, and shall operate as specified in 7.1.3.2.

7.1.4 Cutters.

7.1.4.1 Cutters shall be tested for operating temperature range as specified in Section 8.1, Tool Operating Temperature Test, and shall operate for five operational cycles, and shall perform without any defect or leak.

7.1.4.2 Cutters shall be tested for their ability to cut through the materials as specified in Section 8.13, Cutting Test, and shall cut the material in each material Category at a minimum of Level 1 performance.

7.1.4.2.1 The cutter shall receive a separate Level Rating for each material Category as determined by 12 pieces of the largest size material, indicated by the highest numerical performance Level, that the cutter is able to cut consecutively.

7.1.4.2.2* The minimum total number of qualified cuts that are required for product conformance verification shall be 60.

7.1.4.2.3 For each cut, the cutter shall completely sever the material in a single continuous motion.

7.1.4.2.4* The Level Rating for the cutter shall be expressed as specified in 6.1.5.3.2.

7.1.4.2.5 It shall be assumed that the cutter is capable of cutting all performance Levels below its rated level in any specific materials Category.

7.1.4.3 All mechanical parts of the cutter shall be tested for product integrity as specified in Section 8.14, Cutter Integrity Test, and shall sustain the maximum load that can be imparted from the force generated by the tool without damage, and the cutter shall operate and cut. For each cut, the cutter shall completely sever the material in a single continuous motion.

7.1.4.4 The deadman control of cutters shall be tested for endurance as specified in Section 8.10, Deadman Control Device Endurance Test, and the deadman control shall automatically return to neutral, and the cutter shall develop the rated system input.

7.1.4.5 Where cutters are equipped with a built-in automatic safety relief device in accordance with 6.1.1.4, cutters shall be tested for proper functioning of the tool and the safety relief device as specified in Section 8.11, Safety Relief Device Test, and the tool shall operate properly without any sign of permanent damage, defect, or leaks, and the safety relief device shall automatically reset.

7.2 Hose Assemblies. Hose assemblies shall be proof pressure tested as specified in Section 8.25, Hose Assembly Proof Pressure Test, and shall not leak or rupture.

7.3 Power Units.

7.3.1 The power unit shall be tested for impact resistance as specified in Section 8.15, Impact Resistance Test, and shall develop the rated system input of a rescue tool during each of five operational cycles.

7.3.2 The power unit shall be tested for noise production as specified in Section 8.16, Noise Test, and shall not exceed 83 dBA at 4 m (13 ft).

7.3.3 The power unit shall be tested for operation on an incline as specified in Section 8.17, Incline Operational Test, and shall power a rescue tool through a complete operational cycle to the rated system input of the rescue tool.

7.3.4 The power unit hydraulic pump shall be tested for its ability to maintain rated system input as specified in Section 8.18, Power Unit Pressure Test, and shall maintain the rated system input for at least 1 minute.

7.3.5 The power unit output pressure relief or automatic limiting device shall be tested for proper operation as specified in Section 8.19, Power Unit Pressure Relief and Automatic Limiting Device Test, and shall prevent the power unit output from achieving greater than 105 percent of the rated system input.

7.3.6 The manually operated dump valve of power units shall be tested for proper operation as specified in Section 8.20, Power Unit Dump Valve Test, and shall allow hose to be disconnected from and reconnected to the power unit.

7.3.7 Power units shall be tested for endurance as specified in Section 8.21, Power Unit Endurance Test, and shall operate normally, and shall not leak.

7.3.8 Directional valves on power units, where provided, shall be tested for endurance as specified in Section 8.22, Directional Valve Endurance Test, and shall operate normally, and shall not leak.

7.4 Remote Valve Blocks and Hose Reels.

7.4.1 Remote valve blocks shall be tested for endurance as specified in Section 8.23, Remote Valve Block Endurance Test, and shall operate normally, and shall not leak.

7.4.2 Hose reels shall be tested for endurance as specified in Section 8.24, Hose Reel Endurance Test, and hose reel rotary seals shall not leak.

--`,,```-`-`,,`,,`,`,,`---
Copyright National Fire Protection Association
Provided by IHS under license with NFPA
No reproduction or networking permitted without license from IHS
Not for Resale

Chapter 8 Testing

8.1 Tool Operating Temperature Test.

8.1.1 The tool test specimen, including the power unit designed to be used in conjunction with the specific tool and all hose and cables necessary to connect the power unit to the tool, shall be placed in a temperature-conditioning chamber at –20°C, ±2°C (–4°F, ±4°F) for a minimum of 5 hours. The 5-hour storage time shall begin when the temperature-conditioning chamber has stabilized at –20°C, ±2°C (–4°F, ±4°F) after the tool test specimen has been placed in the chamber.

8.1.2 The tool test specimen shall be removed from the temperature-conditioning chamber after being subjected to at least 5 hours at the conditioning temperature. The tool test specimen shall then be started within 2 minutes of removal from the temperature-conditioning chamber and shall be operated for five full cycles from the fully open to the fully closed position at rated system input.

8.1.3 The tool test specimen, power unit, hose, and cables shall be observed for defects and leaks while the tool test specimen is in operation.

8.1.4 After a 12-hour minimum dwell time, the same tool test specimen, including the power unit designed to be used in conjunction with the specific tool and all hose and cables necessary to connect the power unit to the tool, shall then be stored in a temperature-conditioning chamber at 49°C, ±2°C (120°F, ±4°F) for a minimum of 5 hours. The 5-hour storage time shall begin when the temperature-conditioning chamber has stabilized at 49°C, ±2°C (120°F, ±4°F) after the tool test specimen has been placed in the chamber.

8.1.5 The tool test specimen shall be removed from the temperature-conditioning chamber after being subjected to at least 5 hours at the conditioning temperature. The tool test specimen shall then be started within 2 minutes of removal from the temperature-conditioning chamber and shall be operated for five full cycles from the fully open to the fully closed position at rated system input.

8.1.6 The tool test specimen, power unit, hose, and cables shall be observed for defects and leaks while the tool test specimen is in operation.

8.1.7 The results of observation of all test cycles shall be used to determine pass/fail.

8.1.8 During any of the test cycles, any operational abnormalities, defects, or leaks in the tool, power unit, hose, or cables shall constitute failure.

8.2 Spreading Force Test.

8.2.1 The spreading forces of tool test specimens shall be measured using the tips normally supplied to the purchaser or user.

8.2.2 A test fixture shall be provided that allows the tool test specimen to move through its full operational cycle.

8.2.3 The test fixture shall be equipped with a calibrated force-measuring device, with a minimum accuracy of ±0.5 percent of the total scale reading, to record the forces developed.

8.2.4 The general test setup shall be as shown in Figure 8.2.4(a) or Figure 8.2.4(b), as applicable. Equivalent test setups that use the same concept shall be permitted.

8.2.4.1 The test points shall be the existing holes in the tool for pulling attachments.

8.2.4.2 Where there are no pulling attachment holes in the tool or test attachments supplied by the manufacturer, holes shall be made for the purposes of conducting this test.

8.2.5 The tool test specimen shall be operated at the rated system input of the tool.

8.2.6 The spreading force exerted by the tool test specimen shall be measured and recorded at 10 uniformly spaced intervals that range from the fully closed position to 95 percent of the fully open position.

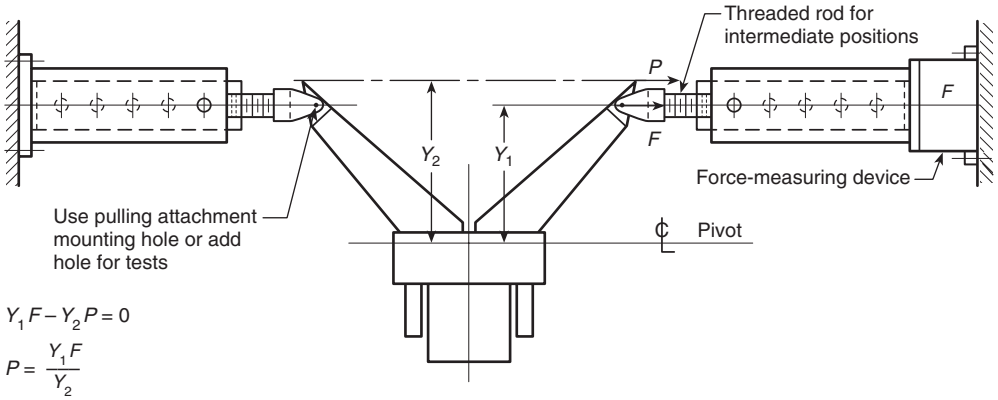

$$Y_1 F - Y_2 P = 0$$

$$P = \frac{Y_1 F}{Y_2}$$

where:

Y_1 = moment arm length of the measured force F

F = measured force at the attachment points

Y_2 = moment arm length of the calculated force P

P = calculated force at the tips

FIGURE 8.2.4(a) Test Fixture to Determine Spreading and Retracting Forces of Spreaders.

Copyright National Fire Protection Association
Provided by IHS under license with NFPA
No reproduction or networking permitted without license from IHS
Not for Resale

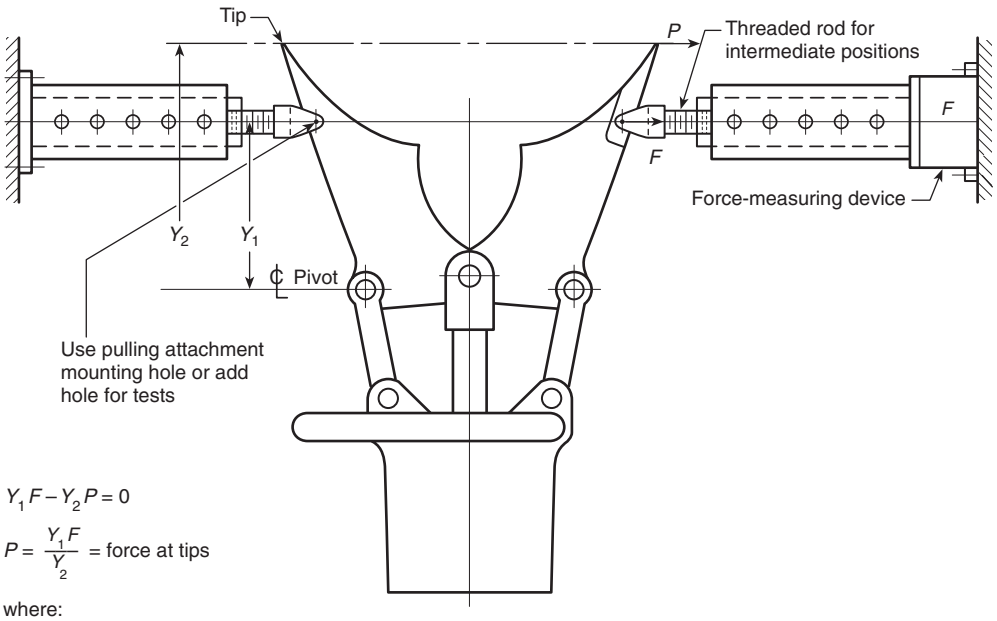

$Y_1 F - Y_2 P = 0$

$P = \frac{Y_1 F}{Y_2}$ = force at tips

where:
Y_1 = moment arm length of the measured force F
F = measured force at the attachment points
Y_2 = moment arm length of the calculated force P
P = calculated force at the tips

FIGURE 8.2.4(b) Test Fixture to Determine Spreading and Retracting Forces of Combination Tools.

8.2.7 The recorded spreading forces shall be used to calculate the spreading force at the tool tip using the following formula:

$$P = \frac{Y_1 F}{Y_2}$$

where:
P = calculated force at the tips
Y_1 = moment arm length of the measured force F
F = measured force at the attachment points
Y_2 = moment arm length of the calculated force P

8.2.8 Any calculated spreading force at the tool tips less than 8900 N (2000 lbf) shall constitute failure.

8.2.9 The calculated spreading forces at the tool tips shall be reviewed to determine the LSF and HSF designations, respectively.

8.2.10 The calculated spreading forces at the tool tips shall be the reported forces that are required by 7.1.1.4 and 7.1.3.6.

8.3 Ram Tool Spreading Force Test.

8.3.1 The spreading forces of the tool test specimens shall be measured using the tips normally supplied to the purchaser or user.

8.3.2 A test fixture shall be provided. The test fixture shall be equipped with a force-measuring device and shall allow the tool test specimen to move through its full operational cycle.

8.3.3 The test fixture shall be equipped with a calibrated force-measuring device, with a minimum accuracy of ±0.5 percent of the total scale reading, to record the forces developed.

8.3.4 The general test setup shall be as shown in Figure 8.3.4, as applicable. Equivalent test setups that use the same concept shall be permitted.

8.3.4.1 The test points shall be the existing holes in the tool for pulling attachments.

8.3.4.2 Where there are no pulling attachment holes in the tool, holes shall be made for the purposes of conducting this test.

8.3.5 The ram tool test specimen shall be operated at the rated system input of the tool.

8.3.6 The spreading force exerted by the ram shall be measured and recorded at three uniformly spaced intervals that range from the fully closed position to 95 percent of the fully open position.

8.3.7 The recorded spreading forces shall be reviewed to determine pass/fail. Any recorded spreading force less than 8900 N (2000 lbf) shall constitute failure.

8.3.8 The recorded spreading forces shall be reviewed to determine the LSF and HSF designations, respectively.

8.3.9 The recorded spreading forces at the tool tips shall be the reported forces required by 7.1.2.5.

8.4 Spreader Tool Pulling Force Test.

8.4.1 The pulling forces of tool test specimens shall be measured using the tips normally supplied to the purchaser or user.

8.4.2 A test fixture shall be provided that allows the tool test specimen to move through its full operational cycle.

Copyright National Fire Protection Association
Provided by IHS under license with NFPA
No reproduction or networking permitted without license from IHS
Not for Resale

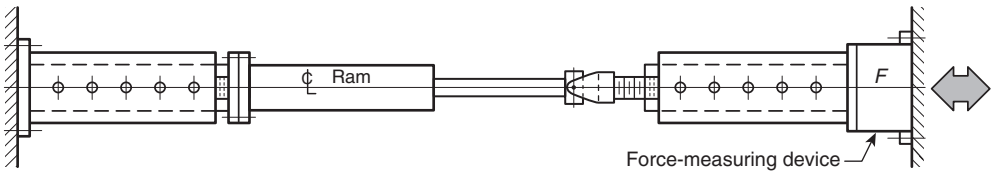

F = measured force at attachment points

FIGURE 8.3.4 Test Fixture to Determine Extension and Retraction Forces of Rams.

8.4.3 The test fixture shall be equipped with a calibrated force-measuring device, with a minimum accuracy of ±0.5 percent of the total scale reading, to record the forces developed.

8.4.4 The general test setup shall be as shown in Figure 8.2.4(a) or Figure 8.2.4(b), as applicable. Equivalent test setups that use the same concept shall be permitted.

8.4.5 The test points shall be the standard production pulling attachment points on the rescue tool.

8.4.6 The tool test specimen shall be operated at the rated system input of the tool.

8.4.7 The pulling force exerted by the tool test specimen shall be measured and recorded at 10 uniformly spaced intervals that range from the fully open position to 95 percent of the fully closed position.

8.4.8 The reported pulling forces at the tool tips shall be reviewed to determine pass/fail and to determine the LPF and HPF designations, respectively.

8.4.9 The recorded pulling forces shall be the reported forces required by 7.1.1.5 and 7.1.3.7.

8.5 Ram Tool Pulling Force Test.

8.5.1 The pulling forces of tool test specimens shall be measured using the tips normally supplied to the purchaser or user.

8.5.2 A test fixture shall be provided. The test fixture shall be equipped with a force-measuring device and shall allow the tool test specimen to move through its full operational cycle.

8.5.3 The test fixture shall be equipped with a calibrated force-measuring device, with a minimum accuracy of ±0.5 percent of the total scale reading, to record the forces developed.

8.5.4 The general test setup shall be as shown in Figure 8.3.4, as applicable. Equivalent test setups of the same concept shall be permitted.

8.5.5 The test points shall be the standard production pulling attachment points on the rescue tool.

8.5.6 The ram tool test specimen shall be operated at the rated system input of the tool.

8.5.7 The pulling force exerted by the ram shall be measured and recorded at three uniformly spaced intervals that range from the fully open position to 95 percent of the fully closed position.

8.5.8 The recorded pulling forces shall be reviewed to determine pass/fail and the LPF and HPF designations, respectively.

8.5.9 The recorded pulling forces at the tool tips shall be the reported forces required by 7.1.2.6.

8.6 Spreading Force Sudden Power Loss Test.

8.6.1 Tool test specimens shall be placed in the test fixture exactly as for the spreading force test specified in Section 8.2 or Section 8.3, as applicable for the specific tool test specimen.

8.6.2 Tool test specimens shall be set at the HSF position and shall be subjected to an external load equal to the greatest spreading force measured in the respective spreading force test, ±2 percent.

8.6.3 The pressure supply hose or electric cable that supplies the tool test specimen shall then be disconnected from the tool to simulate a sudden power loss, and any creep of the tool test specimen shall be measured.

8.6.3.1 Where the tool test specimen is not equipped with a control, the creep shall be measured at 9 minutes.

8.6.3.2 Where the tool test specimen is equipped with a control, the control shall be set at each setting during the test.

8.6.3.2.1 The control setting shall be set for 3 minutes at fully open, 3 minutes at fully closed, and 3 minutes at neutral.

8.6.3.2.2 The creep shall be measured at 9 minutes.

8.6.4 The measured creep shall be evaluated to determine pass/fail. Any creep that exceeds the requirement shall constitute failure.

8.7 Pulling Force Sudden Power Loss Test.

8.7.1 Tool test specimens shall be placed in the test fixture exactly as for the pulling force test specified in Section 8.4 or Section 8.5, as applicable for the specific tool test specimen.

8.7.2 Tool test specimens shall be set at the HPF position and shall be subjected to an external load equal to the greatest pulling force measured in the respective pulling force test, ±2 percent.

8.7.3 The pressure supply hose or electric cable that supplies the tool test specimen shall then be disconnected from the tool to simulate a sudden power loss, and any creep of the tool test specimen shall be measured.

8.7.3.1 The tool test specimen control shall be set at each setting during the test.

8.7.3.2 The control setting shall be set for 3 minutes at fully open, 3 minutes at fully closed, and 3 minutes at neutral.

8.7.3.3 The creep shall be measured at 9 minutes.

8.7.4 The measured creep shall be evaluated to determine pass/fail. Any creep that exceeds the requirement at 9 minutes shall constitute failure.

Copyright National Fire Protection Association
Provided by IHS under license with NFPA
No reproduction or networking permitted without license from IHS
Not for Resale

8.8 Dynamic Endurance Test.

8.8.1 A test fixture shall be provided that allows the tool test specimen to move through its full operational cycle.

8.8.2 The test fixture shall be equipped with a calibrated force-measuring device, with a minimum accuracy of ±0.5 percent of the total scale reading, to record the forces developed.

8.8.3 The general test setup shall be as shown in Figure 8.2.4(a) or Figure 8.2.4(b), as applicable. Equivalent test setups that use the same concept shall be permitted.

8.8.4 Cooling of the hydraulic fluid, electric motor, and electric switches shall be permitted during this test.

8.8.5 The tool test specimens for spreading and pulling shall undergo 1000 continual operational cycles while under a spreading load equal to 80 percent of the LSF and while under a pulling load equal to 80 percent of the LPF, as defined in 7.1.1.4, 7.1.1.5, 7.1.2.5, 7.1.2.6, 7.1.3.6, or 7.1.3.7, as applicable for the specific tool test specimen.

8.8.5.1 A pause in the continual operational cycles for lubrication shall be permitted.

8.8.5.2 The continual operational cycles shall not be interrupted for maintenance other than as allowed by 8.8.5.1.

8.8.6 The tool test specimens shall then be placed in the same test fixture exactly as for the load test specified in Section 8.2 or Section 8.3, as applicable for the specific tool test specimen.

8.8.6.1 Tool test specimens shall be subjected to a test load equal to 110 percent of the HSF of the specific tool.

8.8.6.2 Where tools also are rated for pulling, those tool test specimens shall also be subjected to a test load equal to 110 percent of the HPF of the specific tool.

8.8.7 The pressure supply hose or electrical cables supplying the tool test specimen shall then be disconnected from the tool to simulate a sudden power loss, and any creep of the tool test specimen shall be measured.

8.8.7.1 Where the tool test specimen is not equipped with a control, the creep shall be measured at 9 minutes.

8.8.7.2 Where the tool test specimen is equipped with a control, the control shall be set at each setting during the test.

8.8.7.2.1 The control setting shall be set for 3 minutes at fully open, 3 minutes at fully closed, and 3 minutes at neutral.

8.8.7.2.2 The creep shall be measured at 9 minutes.

8.8.8 The measured creep shall be evaluated to determine pass/fail. Any creep that exceeds the requirement at 9 minutes shall constitute failure.

8.9 Overload Test.

8.9.1 While the tool test specimen is in the test fixture used for the test specified in Section 8.2 or Section 8.3, as applicable for the specific tool test specimen, a test load equal to 150 percent of the HSF and HPF, as applicable, shall be applied as follows for 1 minute.

8.9.1.1 For rescue tools having external pressure supply and return ports, the test load shall be achieved by applying 150 percent of the rated system input.

8.9.1.2 Rescue tools having self-contained internal pressure supply and return ports (closed-loop systems) shall be permitted to be tested in accordance with the procedures specified in either 8.14.2 or 8.14.4.

8.9.1.3 For rescue tools that do not meet the criteria of 8.9.1.1 or 8.9.1.2, the test load shall be applied externally.

8.9.2 For spreader tool or combination tool test specimens, the test load shall be applied to the tool at the tip separation producing the HSF as determined in 7.1.1.4 or 7.1.3.6. Where the tool is also rated for pulling, the test load shall be applied to the tool at the tip separation producing the HPF as determined in 7.1.1.5 or 7.1.3.7.

8.9.3 For ram tool test specimens, the test load shall be applied to the tool at the tip separation producing the HSF as determined in 7.1.2.5. Where the ram tool is also rated for pulling, the test load shall be applied to the tool at the tip separation producing the HPF as determined in 7.1.2.6.

8.9.4 The test results shall be evaluated and the tool test specimen shall be examined and operated to determine pass/fail.

8.9.4.1 The inability of a tool to produce the HSF or HPF, or both, as applicable, shall constitute failure.

8.9.4.2 The inability of a tool to be fully operational from the fully open position to the fully closed position back to the fully open position shall constitute failure.

8.10 Deadman Control Device Endurance Test.

8.10.1 The deadman control on the tool test specimen shall be subjected to a continual 5000-cycle endurance test during which fluid shall be circulated through the tool, or current applied, so as to cause the tool to move in both the opening and closing directions. The tool shall be operated a distance equal to no less than 10 percent of the total travel distance of the tool in each direction during each activation. No external mechanical load, or resistance, shall be applied to the tool.

8.10.2 A cycle for this test shall be the activation of the control to its hard stop in each direction so as to cause the tool test specimen to move in the opening and closing directions as specified in 8.10.1, and then releasing the control, allowing the control to return to its neutral position.

8.10.3 Where all deadman controls on the tool test specimen are identical, a single test with one tool shall be conducted. However, each different type of deadman control shall be tested separately.

8.10.4 Following the 5000 cycles, the deadman control shall be evaluated to determine that it has automatically returned to the neutral position.

8.10.5 For spreaders, rams, and combination tools, the tool test specimen shall then be evaluated in accordance with Section 8.6, Spreading Force Sudden Power Loss Test.

8.10.5.1 The measured creep shall be evaluated to determine pass/fail. Any creep that exceeds the requirement at 9 minutes shall constitute failure.

8.10.5.2 The tool test specimen shall be examined and operated to determine pass/fail. The inability of a tool to produce the HSF or HPF, or both, as applicable, shall constitute failure.

8.10.6 For cutters, the tool test specimen shall then be evaluated in accordance with Section 8.14, Cutter Integrity Test.

8.11 Safety Relief Device Test.

8.11.1 The pressure and return lines shall be connected to the tool, and the return line from the tool shall be blocked.

Copyright National Fire Protection Association
Provided by IHS under license with NFPA
No reproduction or networking permitted without license from IHS
Not for Resale

8.11.2 The power unit shall be activated and the tool shall be operated with the piston rod extending for 15 seconds to the rated system input.

8.11.3 For spreaders, rams, and combination tools, the return line shall then be unblocked and the tool shall be tested as specified in Section 8.6, Spreading Force Sudden Power Loss Test. Testing in accordance with Section 8.8, Dynamic Endurance Test, shall be permitted to be performed only once to evaluate both Sections 8.6 and 8.11.

8.11.4 For spreaders, rams, and combination tools, pass/fail shall be determined as specified in 7.1.1.2, 7.1.2.2, and 7.1.3.2, respectively.

8.11.5 For cutters, the return line shall then be unblocked, and the cutter shall be operated for five complete operational cycles to the rated system input.

8.11.6 For cutters, pass/fail shall be determined in accordance with 7.1.4.5.

8.12 Ram Bend Test.

8.12.1 The ram tool test specimen shall be tested at 95 percent of the full extension as shown in Figure 8.12.1.

8.12.2 An external off-center load equal to 125 percent of the spreading force measured at 95 percent of its full extension in 8.3.6 shall be applied to the ram while the ram is extended to 95 percent of its stroke. The load shall be applied at a point not more than 13 mm (½ in.) from the farthest edge of the gripping surfaces of the feet and in the same radial plane.

8.12.3 The tool test specimen shall be examined for leakage to determine pass/fail. Any leakage shall constitute failure.

8.12.4 The tool test specimen shall be operated to determine pass/fail. The inability of a tool to produce the HSF or HPF, or both, as applicable, shall constitute failure.

8.13 Cutting Test.

8.13.1 The tool test specimen shall be operated to cut 12 pieces of the largest size material, indicated by the highest numerical performance Level, that it is capable of cutting for each material Category specified in Figure 8.13.1.

8.13.2 Each tool test specimen shall use only one set of blades for this test.

8.13.3 Cutting shall be permitted to be performed at any area of the blades.

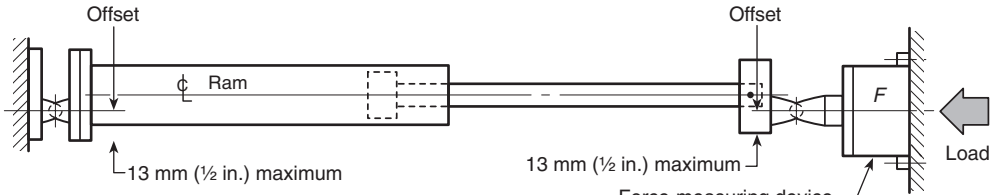

F = measured force at the attachment points

FIGURE 8.12.1 Fixture for Ram Bend Test.

Material Category	A Round Bar	B Flat Bar	C Round Pipe		D Square Tube	E Angle Iron
Material	A-36 Hot-Rolled	A-36	Schedule 40 A-53 Grade B		A-500 Grade	A-36
Performance Level	Diameter (in.)	Thickness × Width (in. × in.)	Nominal size (in.)	OD × Wall Thickness (in. × in.)	Dimension × Wall Thickness (in. × in.)	Square Dimension × Thickness (in. × in.)
1	⅜	¼ × ½	⅜	0.68 × 0.09	½ × 0.06	½ × ⅛
2	½	¼ × 1	¾	1.05 × 0.11	1¾ × 0.06	1 × ⅛
3	⅝	¼ × 2	1	1.32 × 0.13	1 × 0.08	1¼ × 3⁄16
4	¾	¼ × 3	1¼	1.66 × 0.14	1¼ × 0.12	1½ × 3⁄16
5	⅞	¼ × 4	1½	1.90 × 0.15	1½ × 0.12	1½ × ¼
6	1	⅜ × 3	2	2.38 × 0.15	1¾ × 0.12	1¾ × ¼
7	1¼	⅜ × 4	2½	2.88 × 0.20	2 × 0.15	1½ × ⅜
8	1½	⅜ × 5	3	3.50 × 0.22	2½ × 0.19	2 × ⅜
9	1¾	⅜ × 6	3½	4.00 × 0.23	3 × 0.19	2½ × ⅜

For SI units 1 in. = 25.4 mm.

FIGURE 8.13.1 Cut Testing and Level Performance Rating.

Copyright National Fire Protection Association
Provided by IHS under license with NFPA
No reproduction or networking permitted without license from IHS
Not for Resale

8.13.4 The minimum total number of qualified cuts required for product conformance verification shall be 60; that is, 12 cuts at the same performance Level for a single material Category and repeated for all material Categories.

8.13.5 The performance Level shall be the same for all 12 cuts of a single material Category but shall be permitted to be a different performance Level for each material Category.

8.13.6 Each cut shall be observed to determine that the cutter completely severs the material in a single continuous motion to determine pass/fail.

8.13.7 The number of pieces of material that are cut shall be tabulated to determine pass/fail.

8.13.8 The performance Level at which the cutter cuts each material Category shall be recorded and reported to determine the Level Rating for the cutter.

8.13.9 The inability of a cutter to cut through the materials at a minimum of performance Level 1 in each of the five material Categories shall constitute failure of the cutter.

8.14 Cutter Integrity Test.

8.14.1 The tool test specimen shall be operated in accordance with the manufacturer's instructions.

8.14.2 For rescue tools having external pressure supply and return ports, the cutter shall be pressurized to 150 percent of the rated system input and caused to cut into a steel rod that is beyond the tool's cutting capacity for 1 minute.

8.14.3 Rescue tools having self-contained internal pressure supply and return ports (closed-loop systems) shall be permitted to be tested in accordance with the procedures specified in either 8.14.2 or 8.14.4.

8.14.4 The rescue tool cutter shall be operated at rated system input to cut into steel that is beyond the cutting capacity of the cutter and is connected to a force-measuring device.

8.14.4.1 The force achieved by the cutter shall be recorded.

8.14.4.2 With the cutter blades still engaged into the steel, an opposing external force equal to 1.5 times the achieved force shall be applied for 1 minute.

8.14.5 Following the overload condition, the cutters shall be operated for a single cut of each material Category at the performance Level for which the cutter is rated.

8.14.5.1 For each cut, the cutter shall completely sever the material in a single continuous motion.

8.14.5.2 Cutting shall be permitted to be performed at any area of the blades.

8.14.5.3 The power unit shall be returned to the normal operating pressure so that it will not exceed the rated system input pressure needed to perform the following test cuts.

8.14.6 The cutting process shall be evaluated to determine pass/fail.

8.15 Impact Resistance Test.

8.15.1 The power unit test specimen shall be suspended in an upright orientation over a solid steel plate that is at least 25 mm (1 in.) thick.

8.15.2 The power unit test specimen shall be dropped a distance of 620 mm (2 ft) onto the steel plate.

8.15.3 The power unit test specimen shall then be connected to a tool that is designated for use with the power unit and shall power the tool through five complete operational cycles of the tool.

8.15.4 The rated system input of the tool that is achieved while being powered by the power unit test specimen during each of the five cycles shall be recorded to determine pass/fail.

8.16 Noise Test.

8.16.1 The test procedure shall be conducted in accordance with ANSI S12.36, *Standard Survey Methods for the Determination of Sound Pressure Levels of Noise Sources*.

8.16.2 The noise produced by the power unit test specimens shall be measured at a distance of 4 m (13 ft) from the power unit.

8.16.3 The noise production shall be recorded and evaluated to determine pass/fail.

8.17 Incline Operational Test.

8.17.1 The power unit test specimen shall be tested while powering a rescue tool with the largest differential oil volume that is capable of being used with the system. The rescue tool used in this test shall be designated for use with the power unit test specimen.

8.17.2 The power unit test specimen shall be inclined to a 15-degree angle in one of the four horizontal axial directions.

8.17.3 The power unit test specimen shall then power the tool through a single operational cycle to the tool's rated system input.

8.17.4 The rated system input that is achieved shall be recorded and evaluated to determine pass/fail.

8.17.5 The power unit test specimen shall then be inclined to a 15-degree angle in the second, third, and fourth horizontal axial directions.

8.17.6 The power unit test specimen shall then power the tool to the tool's rated system input through an additional single operational cycle for each additional 15-degree horizontal axial direction.

8.17.7 The rated system input that is achieved in each of the additional 15-degree horizontal axial directions shall be recorded and evaluated to determine pass/fail.

8.18 Power Unit Pressure Test.

8.18.1 Power unit test specimens shall be tested on a level surface, and the system input shall be monitored by a gauge.

8.18.2 Power unit test specimens shall be operated at the rated system input designated for the specific power unit. The rated system input shall be maintained for 1 minute.

8.18.3 During the 1-minute test specified in 8.18.2, the gauge shall be observed for any fluctuation to determine pass/fail.

8.18.4 Pressure fluctuation during the 1-minute test, if any, shall not be more than ±5 percent of the rated system input.

8.19 Power Unit Pressure Relief and Automatic Limiting Device Test.

8.19.1 The output safety pressure relief valve or automatic limiting device of the power unit test specimen shall be set at the rated system input.

Copyright National Fire Protection Association
Provided by IHS under license with NFPA
No reproduction or networking permitted without license from IHS
Not for Resale

8.19.2 Power unit test specimens shall be tested on a level surface, and the system input shall be monitored by a gauge.

8.19.3 The system input of the power unit test specimen shall be raised until the pressure relief or automatic shutoff device operates. This test cycle shall be repeated for a total of 10 cycles.

8.19.4 The system input at which the pressure relief or automatic shutoff device operates shall be recorded for each of the 10 test cycles.

8.19.5 The recorded system input at which the pressure relief or automatic shutoff device operates shall be evaluated to determine pass/ fail.

8.20 Power Unit Dump Valve Test.

8.20.1 The dump valve of the power unit test specimen shall be tested at the maximum operating flow of the prime mover.

8.20.2 Power unit test specimens shall be tested on a level surface with the supply hose connected to a tool that is designated for use with the power unit test specimen. The supply hose shall then be pressurized.

8.20.3 While the dump valve of the power unit test specimen is activated (i.e., open), the hose to the tool shall be disconnected. The system shall be repressurized and then dumped again.

8.20.4 The hose shall then be reconnected to the tool. The reconnection shall be possible without causing pressurization in the couplers or causing other related problems.

8.20.5 The disconnection and reconnection of the hose shall be evaluated to determine pass/fail.

8.20.6 The tool shall operate normally after the hose has been reconnected.

8.21 Power Unit Endurance Test.

8.21.1 Power unit test specimens shall be tested on a level surface, and the system input shall be monitored by a gauge.

8.21.2 The power unit test specimen shall generate the rated system input and shall be held at the rated system input for 20 seconds.

8.21.3 The power unit shall then be relieved of the rated system input for 20 seconds.

8.21.4 The duration of the test shall comprise one hundred 20-second rated system input "held"/20-second rated system input "relieved" cycles.

8.21.5 A pause shall be permitted as required for refilling the fuel tank or changing replaceable battery packs.

8.21.6 Cooling of the hydraulic fluid, electric motor, and electric switches shall be permitted during the test.

8.21.7 The power unit test specimen shall be observed during and immediately after completion of the test to check for leaks or malfunction to determine pass/fail.

8.22 Directional Valve Endurance Test.

8.22.1 The directional valve(s) of the power unit test specimen's hydraulic pump shall be subjected to a continual 5000-cycle endurance test during which fluid must be circulating through a connected tool, so as to cause the fluid to circulate through the hydraulic lines connecting it to the power unit. A cycle for this test shall be defined as the activation of the directional valve(s) to its hard stop in each direction, and then returning the directional valve(s) to its neutral position. It shall not be necessary to subject the directional valves to the rated system input pressure during the 5000 cycles.

8.22.2 Following the 5000 test cycles, the directional valve(s) shall be pressurized to 110 percent of the rated system input.

8.22.3 The directional valve(s) shall be observed for operation and leakage to determine pass/fail.

8.23 Remote Valve Block Endurance Test.

8.23.1 Remote valve block test specimens shall be subjected to a continual 5000-cycle endurance test during which fluid must be circulating through a connected tool, so as to cause the fluid to circulate through the hydraulic lines connecting it to the power unit. A cycle for this test shall be defined as the activation of the directional valve(s) to its hard stop in each direction, and then returning the directional valve(s) to its neutral position. It shall not be necessary to subject the remote valve block to reach the rated system input pressure during the 5000 system.

8.23.2 Following the 5000 test cycles, the remote valve blocks shall be pressurized to 110 percent of the rated system input.

8.23.3 The remote valve blocks shall be observed for leakage to determine pass/fail.

8.24 Hose Reel Endurance Test.

8.24.1 Hose reel test specimens shall be subjected to a 5000-cycle endurance test. One cycle shall consist of one revolution in each direction.

8.24.2 After the 5000 test cycles, the rotary seal on the hose reel test specimen shall be pressurized to 110 percent of the maximum rated inlet pressure.

8.24.3 The rotary seal shall be observed for leakage to determine pass/fail.

8.25 Hose Assembly Proof Pressure Test.

8.25.1 The hose assembly shall be hydrostatic tested to 150 percent of the rated system input.

8.25.2 The test pressure shall be maintained for 1 minute, +5 seconds/–0 seconds, and then released. This procedure shall be performed twice in a 5-minute period.

8.25.3 The hose assembly shall be observed during and after the pressurization to determine pass/fail.

Annex A Explanatory Material

Annex A is not a part of the requirements of this NFPA document but is included for informational purposes only. This annex contains explanatory material, numbered to correspond with the applicable text paragraphs.

A.3.2.1 Approved. The National Fire Protection Association does not approve, inspect, or certify any installations, procedures, equipment, or materials; nor does it approve or evaluate testing laboratories. In determining the acceptability of installations, procedures, equipment, or materials, the authority having jurisdiction may base acceptance on compliance with NFPA or other appropriate standards. In the absence of such standards, said authority may require evidence of proper installation, procedure, or use. The authority having jurisdic-

Copyright National Fire Protection Association
Provided by IHS under license with NFPA
No reproduction or networking permitted without license from IHS
Not for Resale

tion may also refer to the listings or labeling practices of an organization that is concerned with product evaluations and is thus in a position to determine compliance with appropriate standards for the current production of listed items.

A.3.2.2 Authority Having Jurisdiction (AHJ). The phrase "authority having jurisdiction," or its acronym AHJ, is used in NFPA documents in a broad manner, since jurisdictions and approval agencies vary, as do their responsibilities. Where public safety is primary, the authority having jurisdiction may be a federal, state, local, or other regional department or individual such as a fire chief; fire marshal; chief of a fire prevention bureau, labor department, or health department; building official; electrical inspector; or others having statutory authority. For insurance purposes, an insurance inspection department, rating bureau, or other insurance company representative may be the authority having jurisdiction. In many circumstances, the property owner or his or her designated agent assumes the role of the authority having jurisdiction; at government installations, the commanding officer or departmental official may be the authority having jurisdiction.

A.3.2.4 Listed. The means for identifying listed equipment may vary for each organization concerned with product evaluation; some organizations do not recognize equipment as listed unless it is also labeled. The authority having jurisdiction should utilize the system employed by the listing organization to identify a listed product.

A.4.1.7 The National Fire Protection Association (NFPA), from time to time, has received complaints that certain products might be carrying labels falsely identifying them as compliant with an NFPA standard.

NFPA advises those purchasing a rescue tool to be aware of the following:

For a rescue tool to meet the requirements of NFPA 1936, *Standard on Powered Rescue Tools*, it must be certified by an independent, third-party product conformance verification organization. In addition, the product must carry the label, symbol, or other identifying mark of that product conformance verification organization.

Any rescue tool system or rescue tool that does not bear the mark of an independent, third-party product conformance verification organization is NOT COMPLIANT with NFPA 1936 even if the product label states that the item is compliant.

For further information about product conformance verification and product labeling, refer to Chapters 4 and 5 of this standard. Also, see the definitions for *product conformance verification, labeled*, and *listed* in Chapter 3.

Third-party product conformance verification is an important means of ensuring the quality of rescue tool systems or rescue tools. To be certain that an item is properly certified, labeled, and listed, NFPA recommends that prospective purchasers require appropriate evidence of product conformance verification for the specific product and model from the manufacturer before purchasing. Prospective purchasers should also contact the product conformance verification organization and request copies of the product conformance verification organization's list of certified products to the appropriate NFPA standard. This listing is a requirement of third-party product conformance verification by this standard and is a service performed by the product conformance verification organization.

A.4.2.1 The product conformance verification organization should have a sufficient breadth of interest and activity so that the loss or award of a specific business contract would not be a determining factor in the financial well-being of the agency.

A.4.2.5 The contractual provisions covering product conformance verification programs should contain clauses advising the manufacturer that if requirements change, the product should be brought into compliance with the new requirements by a stated effective date through a compliance review program involving all currently listed products.

Without these clauses, certifiers would not be able to move quickly to protect their names, marks, or reputations. A product safety product conformance verification program would be deficient without these contractual provisions and the administrative means to back them up.

A.4.2.6 Investigative procedures are important elements of an effective and meaningful product safety product conformance verification program. A preliminary review should be carried out on products submitted to the agency before any major testing is undertaken.

A.4.2.9 The product conformance verification organization's follow-up inspections should include, in most instances, the witnessing of production tests. In the case of certain products, the product conformance verification organization inspectors should select samples from the production line and submit them to the main laboratory for countercheck testing. In the case of other products, it can be beneficial to purchase samples in the open market for test purposes.

A.4.4.1 For further information and guidance on recall programs, see 21 CFR 7, Subpart C.

A.6.1.1.7 Dust caps can be provided to keep dirt out of the couplings.

A.6.1.4.4.2 For example, if the cutter succeeds in cutting 12 pieces each of 19 mm (¾ in.) diameter round bar (performance Level 4 of material Category A), 9.5 mm × 76 mm (⅜ in. × 3 in.) flat bar (performance Level 6 of material Category B), 51 mm (2 in.) diameter round pipe (performance Level 6 of material Category C), 38 mm × 305 mm (1½ in. × 12 in.) square tube (performance Level 5 of material Category D), and 38 mm × 9.5 mm (1½ in. × ⅜ in.) angle iron (performance Level 7 of material Category E), the cutter would receive a Level Rating expressed as follows:

A4/B6/C6/D5/E7.

A.6.1.5.3.2 For example, if the cutter succeeds in cutting 12 pieces each of 19 mm (¾ in.) diameter round bar (performance Level 4 of material Category A), 9.5 mm × 76 mm (⅜ in. × 3 in.) flat bar (performance Level 6 of material Category B), 51 mm (2 in.) diameter round pipe (performance Level 6 of material Category C), 38 mm × 305 mm (1½ in. × 12 in.) square tube (performance Level 5 of material Category D), and 38 mm × 9.5 mm (1½ in. × ⅜ in.) angle iron (performance Level 7 of material Category E), the cutter would receive a Level Rating expressed as follows:

A4/B6/C6/D5/E7.

A.6.2.4 The external mechanical loads that can significantly reduce hose life include excessive flexing, twisting, kinking, tensile or side loads, bend radius, and vibration. The manufacturer should consider the use of swivel-type fittings or adapters to ensure that the hose is not twisted during usage or storage.

A.7.1.3.4.2 The 60 qualified cuts are the minimum total where 12 cuts are made for a single numerical performance Level in each of five material Categories.

Copyright National Fire Protection Association
Provided by IHS under license with NFPA
No reproduction or networking permitted without license from IHS
Not for Resale

A.7.1.3.4.4 For example, if the cutter succeeds in cutting 12 pieces each of 19 mm (¾ in.) diameter round bar (performance Level 4 of material Category A), 9.5 mm × 76 mm (⅜ in. × 3 in.) flat bar (performance Level 6 of material Category B), 51 mm (2 in.) diameter round pipe (performance Level 6 of material Category C), 38 mm × 305 mm (1½ in. × 12 in.) square tube (performance Level 5 of material Category D), and 38 mm × 9.5 mm (1½ in. × ⅜ in.) angle iron (performance Level 7 of material Category E), the cutter would receive a Level Rating expressed as follows:

A4/B6/C6/D5/E7.

A.7.1.4.2.2 The 60 qualified cuts are the minimum total where 12 cuts are made for a single numerical performance Level in each of five material Categories.

A.7.1.4.2.4 For example, if the cutter succeeds in cutting 12 pieces each of 19 mm (¾ in.) diameter round bar (performance Level 4 of material Category A), 9.5 mm × 76 mm (⅜ in. × 3 in.) flat bar (performance Level 6 of material Category B), 51 mm (2 in.) diameter round pipe (performance Level 6 of material Category C), 38 mm × 305 mm (1½ in. × 12 in.) square tube (performance Level 5 of material Category D), and 38 mm × 9.5 mm (1½ in. × ⅜ in.) angle iron (performance Level 7 of material Category E), the cutter would receive a Level Rating expressed as follows:

A4/B6/C6/D5/E7.

Annex B Informational References

B.1 Referenced Publications. The following documents or portions thereof are referenced within this standard for informational purposes only and are thus not part of the requirements of this document unless also listed in Chapter 2.

B.1.1 NFPA Publications. (Reserved)

B.1.2 Other Publications.

B.1.2.1 U.S. Government Publication. U.S. Government Printing Office, Washington, DC 20402.

Title 21, Code of Federal Regulations, Part 7, Subpart C.

B.1.2.2 Other Publications. *Merriam-Webster's Collegiate Dictionary*, 11th edition, Merriam-Webster, Inc., Springfield, MA, 2003.

B.2 Informational References. (Reserved)

B.3 References for Extracts. (Reserved)

Copyright National Fire Protection Association
Provided by IHS under license with NFPA
No reproduction or networking permitted without license from IHS
Not for Resale

Index

© 2005 National Fire Protection Association. All Rights Reserved.

The copyright in this index is separate and distinct from the copyright in the document that it indexes. The licensing provisions set forth for the document are not applicable to this index. This index may not be reproduced in whole or in part by any means without the express written permission of NFPA.

-A-

Accessories 1.1.4, 1.3.2
Definition 3.3.1
Application of standard 1.3
Approved (definition) 3.2.1, A.3.2.1
Authority having jurisdiction (definition) 3.2.2, A.3.2.2
Automatic limiting device test 8.19

-B-

Batteries ..... 6.1.1.19 to 6.1.1.22, 6.3.24 to 6.3.27

-C-

Cable assembly 7.1.2.4, 8.7.3
Definition 3.3.2
Design requirements 6.2
Product label requirements 5.1.2, 5.3
Weight 5.4.10.2
Combination tools
Definition 3.3.3
Design requirements 6.1.4, A.6.1.4.3.2
Performance requirements 7.1.3, A.6.1.4.3.2, A.7.1.3.4.2
Compliant 4.1.2, 4.1.5, 4.1.6, 4.2.8, 4.2.9, A.4.2.9
Definition 3.3.4
Components .....*see* Powered rescue tool components
Continual (definition) 3.3.6
Continuous (definition) 3.3.7
Controls .....*see also* Deadman control device endurance test; Dump valves
All powered rescue tools 6.1.1.2, 6.1.1.3, 6.1.1.9
Power units ..... 6.3.5 to 6.3.7
Couplers, quick-connect 6.1.1.7, 6.1.1.8, A.6.1.1.7
Cable assembly 6.2.7
Hose assembly 6.2.1, 6.2.4, 6.2.5, A.6.2.4
Power units 6.3.4
Creep (definition) 3.3.8
Cutter integrity test 7.1.3.5, 7.1.4.3, 8.14
Cutters
Definition 3.3.9
Design requirements 6.1.4.3, 6.1.4.4, 6.1.5, A.6.1.4.3.2
Performance requirements 7.1.4, A.6.1.4.3.2, A.7.1.4.2.2
User information 5.4.7, 5.4.8
Cutting test 7.1.3.4, 7.1.4.2, 8.13, A.6.1.4.3.2, A.7.1.3.4.2, A.7.1.4.2.2
Cycle, operational (definition) 3.3.26

-D-

Deadman control device endurance test 7.1.1.8, 7.1.2.9, 7.1.3.10, 7.1.4.4, 8.10
Definitions ..... Chap. 3
Design requirements ..... 4.3.7, Chap. 6
Cable assembly 6.2
Combination tools 6.1.4, A.6.1.4.3.2
Cutters 6.1.5
Hose assembly 6.2, A.6.2.4
Powered rescue tools 6.1, A.6.1
Power units 6.3
Rams 6.1.3
Spreaders 6.1.2
Directional valves endurance test 7.3.8, 8.22
Dump valves
Definition 3.3.11
Test 7.3.6, 8.20
Dynamic endurance test 7.1.1.6, 7.1.2.7, 7.1.3.8, 8.8

-E-

Electrical components ....*see also* Cable assembly; Sudden power loss
All powered rescue tools ..... 6.1.1.11 to 6.1.1.22
Power units ..... 6.3.11, 6.3.23 to 6.3.29
Prime movers 6.3.11, 6.3.29

-F-

Follow-up program 4.2.7, 4.2.9, A.4.29
Definition 3.3.12

-H-

Hazardous products, review of 4.2.10
Highest pulling force (HPF) 5.4.9
Deadman control device endurance test 7.1.2.9.2, 7.1.3.10, 8.10.5.2
Definition 3.3.13
Dynamic endurance test 8.8.6.2
Overload test ..... 7.1.2.8, 7.1.3.9, 8.9.1 to 8.9.3, 8.9.4.1
Pulling force sudden power test 8.7.2
Ram bend test 7.1.2.10, 8.12.4
Ram tool pulling force test 7.1.2.6.2
Spreader tool pulling force test 7.1.1.5.2, 7.1.3.7.2, 8.4.8
Highest spreading force (HSF) 5.4.9
Deadman control device endurance test 7.1.2.9, 7.1.3.10, 8.10.5.2
Definition 3.3.14
Dynamic endurance test 8.8.6.1
Overload test ..... 7.1.2.8, 7.1.3.9, 8.9.1 to 8.9.3, 8.9.4.1
Ram bend test 7.1.2.10, 8.12.4
Ram tool spreading force test 7.1.2.5.2, 8.3.8
Spreading force test 7.1.1.4.2, 7.1.3.6.2, 8.2.9
Sudden power loss test 8.6.2
Hose assembly 7.1.2.4, 8.7.3
Definition 3.3.15
Design requirements 6.2, A.6.2.4
Performance requirements 7.2
Product label requirements 5.1.2, 5.3
Proof pressure test 7.2, 8.25
Weight 5.4.10.2, 6.3.36
Hose reels
Endurance test 7.4.2, 8.24
Performance requirements 7.4.2
Weight 5.4.10.2, 6.3.36
HPF (definition) ..... 3.3.13; *see also* Highest pulling force
HSF (definition) ..... 3.3.14; *see also* Highest spreading force
Hydraulic systems and fluids ..... 6.1.1.1, 6.1.1.5 to 6.1.1.7, A.6.1.1.7
Cable assembly 5.3.5
Hose assembly 5.3.5, 6.2.2, 6.2.4, A.6.2.4
Power units ..... 5.2.3, 6.3.1 to 6.3.3, 6.3.13, 6.3.15 to 6.3.21
Prime movers 6.3.13
Product labeling requirements 5.2.3, 5.3.5
User information 5.4.10.1, 5.4.10.2, 5.4.12

-I-

Identical rescue tools (definition) 3.3.18
Impact resistance test 7.3.1, 8.15
Incline operational test 7.3.3, 8.17

Copyright National Fire Protection Association
Provided by IHS under license with NFPA
No reproduction or networking permitted without license from IHS
Not for Resale

Inspections 4.3
Internal combustion prime movers .... 6.3.9, 6.3.10, 6.3.30 to 6.3.33

-L-

Labeled ..... 4.1.5, 4.1.7, 4.1.9, 4.1.10, 5.2.2, A.4.1.7; *see also* Product labels
Cable assembly and hose assembly components 5.3.2, 5.3.4
Definition 3.2.3
Product conformance verification program 4.2.5.2, 4.2.12
Listed 4.1.5
Definition 3.2.4, A.3.2.4
Lowest pulling force (LPF) 5.4.9
Definition 3.3.19
Dynamic endurance test 8.8.5
Ram tool pulling force test 7.1.2.6.1, 8.5.8
Spreader tool pulling force test 7.1.1.5.1, 7.1.3.7.1, 8.4.8
Lowest spreading force (LSF) 5.4.9
Definition 3.3.20
Dynamic endurance test 8.8.5
Ram tool spreading force test 7.1.2.5.1, 8.3.8
Spreading force test 7.1.1.4.1, 7.1.3.6.1, 8.2.9
LPF (definition) ..... 3.3.19; *see also* Lowest pulling force
LSF (definition) ..... 3.3.20; *see also* Lowest spreading force

-M-

Manufacturers 4.1.4, 4.1.9, 4.1.10, 4.2.1, A.4.2.1
Appeal of decisions 4.2.11
Contract with product conformance verification organization 4.2.5, A.4.2.5
Definition 3.3.23
Follow-up program 4.2.9, A.4.2.9
Modified products, evaluation of ..... 4.2.8, 4.3.9 to 4.3.13
Quality assurance program 4.2.7, 4.4, A.4.4.1
User information 5.4
Material safety data sheet (MSDS) 5.4.12
Measurement, units of 1.4
Modified products, evaluation of ..... 4.2.8, 4.3.9 to 4.3.13

-N-

Noise test 7.3.2, 8.16

-O-

Operational cycle (definition) 3.3.24
Overload test 7.1.1.7, 7.1.2.8, 7.1.3.9, 8.9

-P-

Performance requirements ..... 4.3.8, Chap. 7
Combination tools 7.1.3, A.6.1.4.3.2, A.7.1.3.4.2
Cutters 7.1.4, A.6.1.4.3.2, A.7.1.4.2.2
Hose assembly 7.2
Hose reels 7.4.2
Power units 7.3
Rams 7.1.2
Remote valve blocks 7.4.1
Spreaders 7.1.1
Pneumatic prime movers 6.3.3.4, 6.3.12
Powered rescue tool components
Definition 3.3.27
Power unit components ..... *see* Power units
Powered rescue tools
Definition 3.3.26
Design requirements 6.1, A.6.1
Identical rescue tool (definition) 3.3.18
Performance requirements 7.1, A.7.1
Product label requirements 5.1.1, 5.2
Tests ..... Chap. 8
User information 5.4
Weight 5.4.10
Power loss, sudden ..... *see* Sudden power loss
Power units ..... *see also* Prime movers
Definition 3.3.25
Design requirements 6.3
Performance requirements 7.3
Product label requirements ..... 5.1.1, 5.2, 6.3.8 to 6.3.13
Tests
Dump valve test ..... *see* Dump valves
Endurance test 7.3.7, 8.21
Pressure relief and automatic limiting device test ... 7.3.5, 8.19
Pressure test 7.3.4, 8.18
User information 5.4.10.1, 5.4.11
Weight 5.4.10.1, 6.3.18, 6.3.36
Pressure dump valves ..... *see* Dump valves
Pressure relief and automatic limiting device test, power unit 8.19
Prime movers
Definition 3.3.28
Electric 6.3.11, 6.3.29
Hydraulic 6.3.13
Internal combustion ..... 6.3.9, 6.3.10, 6.3.30 to 6.3.33
Pneumatic 6.3.12, 6.3.34
Product conformance verification ..... Chap. 4
Definition 3.3.29
Inspection and testing 4.2.6, 4.3, A.4.2.6
Label for ..... *see* Labeled
Program 4.1.3, 4.2, A.4.2
Quality assurance program 4.2.7, 4.4, A.4.4.1
Product conformance verification organization ..... 4.1.3, 4.1.7 to 4.1.10, 4.2, A.4.1.7, A.4.2
Definition 3.3.30
Inspection and testing by 4.3
Label of ..... *see* Labeled
Product labels 4.1.6, 4.1.7, 4.1.10, A.4.1.7
Definition 3.3.31
Design requirements ..... 6.3.8 to 6.3.13
Inspection 4.3.4, 4.3.5
Requirements ..... 5.1 to 5.3
Pulling force ..... *see also* Highest pulling force (HPF); Lowest pulling force (LPF)
Definition 3.3.32
Tests
Ram tool pulling force test 7.1.2.6, 8.5
Spreader tool pulling force test 7.1.1.5, 7.1.3.7, 8.4
Sudden power loss test 7.1.1.3, 7.1.2.3, 7.1.3.3, 8.7
Purpose of standard 1.2

-Q-

Quality assurance program 4.2.7, 4.4, A.4.4.1

-R-

Ram bend test 7.1.2.10, 8.12
Ram pulling force test 7.1.2.6, 8.5
Rams
Definition 3.3.33
Design requirements 6.1.3
Performance requirements 7.1.2
Ram tool spreading force test 7.1.2.5, 8.3
Rated system input (definition) 3.3.36
References ..... Chap. 2, Annex B
Remote valve blocks
Endurance test 7.4.1, 8.23
Performance requirements 7.4.1
Rescue tool (definition) ..... 3.3.35; *see also* Powered rescue tool
Rescue tool components (definition) ..... 3.3.28; *see also* Powered rescue tool components

-S-

Safety relief device test 7.1.1.9, 7.1.2.11, 7.1.3.11, 7.1.4.5, 8.11
Scope of standard 1.1

Copyright National Fire Protection Association
Provided by IHS under license with NFPA
No reproduction or networking permitted without license from IHS
Not for Resale

Shall (definition) 3.2.5
Should (definition) 3.2.6
Spreaders
Definition 3.3.37
Design requirements 6.1.2, 6.1.4.2, 6.1.4.5
Performance requirements 7.1.1
Spreader tool pulling force test 7.1.1.5, 7.1.3.7, 8.4
Spreading force .....*see also* Highest spreading force (HSF); Lowest spreading force (LSF)
Definition 3.3.38
Tests
Ram tool spreading force test 7.1.2.5, 8.3
Spreading force test 7.1.1.4, 7.1.3.6, 8.2
Sudden power loss test 7.1.1.2, 7.1.2.2, 7.1.2.4, 7.1.3.2, 8.6
Standard (definition) 3.2.7
Sudden power loss
Pulling force sudden power loss test 7.1.1.3, 7.1.2.3, 7.1.3.3, 8.7
Spreading force sudden power loss test 7.1.1.2, 7.1.2.2, 7.1.2.4, 7.1.3.2, 8.6
System input (definition) 3.3.39

-T-

Testing ..... 4.2.6, 4.3, Chap. 8, A.4.2.6; *see also* specific tests
Tool operating temperature test 7.1.1.1, 7.1.2.1, 7.1.3.1, 7.1.4.1, 8.1
Tools (definition) ..... 3.3.40; *see also* Powered rescue tool

-U-

Units of measurement 1.4
User information 4.3.6, 5.4

-V-

Vendor confirmation (definition) 3.3.41

Copyright National Fire Protection Association
Provided by IHS under license with NFPA
No reproduction or networking permitted without license from IHS
Not for Resale

Sequence of Events Leading to Publication of an NFPA Committee Document

Call goes out for proposals to amend existing document or for recommendations on new document.

▼

Committee meets to act on proposals, to develop its own proposals, and to prepare its report.

▼

Committee votes on proposals by letter ballot. If two-thirds approve, report goes forward. Lacking two-thirds approval, report returns to committee.

▼

Report — *Report on Proposals* (ROP) — is published for public review and comment.

▼

Committee meets to act on each public comment received.

▼

Committee votes on comments by letter ballot. If two-thirds approve, supplementary report goes forward. Lacking two-thirds approval, supplementary report returns to committee.

▼

Supplementary report — *Report on Comments* (ROC) — is published for public review.

▼

NFPA membership meets (Annual or Fall Meeting) and acts on committee report (ROP or ROC).

▼

Committee votes on any amendments to report approved at NFPA Annual or Fall Meeting.

▼

Appeals to Standards Council on Association action must be filed within 20 days of the NFPA Annual or Fall Meeting.

▼

Standards Council decides, based on all evidence, whether or not to issue standard or to take other action, including upholding any appeals.

Committee Membership Classifications

The following classifications apply to Technical Committee members and represent their principal interest in the activity of the committee.

M *Manufacturer:* A representative of a maker or marketer of a product, assembly, or system, or portion thereof, that is affected by the standard.

U *User:* A representative of an entity that is subject to the provisions of the standard or that voluntarily uses the standard.

I/M *Installer/Maintainer:* A representative of an entity that is in the business of installing or maintaining a product, assembly, or system affected by the standard.

L *Labor:* A labor representative or employee concerned with safety in the workplace.

R/T *Applied Research/Testing Laboratory:* A representative of an independent testing laboratory or independent applied research organization that promulgates and/or enforces standards.

E *Enforcing Authority:* A representative of an agency or an organization that promulgates and/or enforces standards.

I *Insurance:* A representative of an insurance company, broker, agent, bureau, or inspection agency.

C *Consumer:* A person who is, or represents, the ultimate purchaser of a product, system, or service affected by the standard, but who is not included in the *User* classification.

SE *Special Expert:* A person not representing any of the previous classifications, but who has a special expertise in the scope of the standard or portion thereof.

NOTES:

1. "Standard" connotes code, standard, recommended practice, or guide.
2. A representative includes an employee.
3. While these classifications will be used by the Standards Council to achieve a balance for Technical Committees, the Standards Council may determine that new classifications of members or unique interests need representation in order to foster the best possible committee deliberations on any project. In this connection, the Standards Council may make such appointments as it seems appropriate in the public interest, such as the classification of "Utilities" in the National Electrical Code Committee.
4. Representatives of subsidiaries of any group are generally considered to have the same classification as the parent organization.

Copyright National Fire Protection Association
Provided by IHS under license with NFPA
No reproduction or networking permitted without license from IHS
Not for Resale

NFPA Technical Committee Document Proposal Form

Note: All proposals must be received by 5:00 p.m. EST/EDST on the published proposal closing date.

For further information on the standards-making process, please contact Codes and Standards Administration at 617-984-7249. For technical assistance, please call NFPA at 617-770-3000.

FOR OFFICE USE ONLY
Log #: _____
Date Rec'd: _____

Please indicate in which format you wish to receive your ROP/ROC: ☐ **CD ROM** ☐ **paper** ☐ **download**
(Note: In choosing the download option you intend to view the ROP/ROC from our Website. No copy will be sent to you.)

Date 12/18/02 **Name** John B. Smith **Telephone** 617-555-1212
Company _____
Address 9 Seattle St. **City** Seattle **State** WA **Zip** 02255
Please indicate organization represented (if any) Fire Marshals Assn. of North America

1. **a) NFPA Document Title** National Fire Alarm Code
   b) NFPA No. & Edition NFPA 72, 2002 ed. **c) Section/Paragraph** 4.4.7.1.1

2. **Proposal Recommends:** *(check one)* ☐ **new text** ☐ **revised text** ☒ **deleted text**

3. **Proposal.** *(Include proposed new or revised wording, or identification of wording to be deleted.)* Note: Proposed text should be in legislative format, that is, use underscore to denote wording to be inserted (inserted wording) and strike-through to denote wording to be deleted (~~deleted wording~~). Delete exception.

4. **Statement of Problem and Substantiation for Proposal.** Note: State the problem that will be resolved by your recommendation. Give the specific reason for your proposal including copies of tests, research papers, fire experience, etc. If more than 200 words, it may be abstracted for publication. A properly installed and maintained system should be free of ground faults. The occurrence of one or more ground faults should be required to cause a "trouble" signal because it indicates a condition that could contribute to future malfunction of the system. Ground fault protection has been widely available on these systems for years and its cost is negligible. Requiring it on all systems will promote better installations, maintenance and reliability.

5. ☒ **This Proposal is Original Material.** Note: Original material is considered to be the submitter's own idea based on or as a result of his/her own experience, thought, or research and, to the best of his/her knowledge, is not copied from another source.

   ☐ **This Proposal is Not Original Material; Its Source** ***(if known)*** **is as Follows:** _____

Sample

I hereby grant the NFPA all and full rights in copyright to this proposal, and I understand that I acquire no rights in any publication of NFPA in which this proposal in this or another similar or analogous form is used.

Signature ***(Required)*** John B. Smith

PLEASE USE SEPARATE FORM FOR EACH PROPOSAL • NFPA FAX (617) 770-3500

Mail to: Secretary, Standards Council • NFPA • 1 Batterymarch Park • PO Box 9101 • Quincy, MA 02269-9101

--`,,`,,`-`-`,,`,,`,`,,`---

Copyright National Fire Protection Association
Provided by IHS under license with NFPA
No reproduction or networking permitted without license from IHS

Not for Resale

NFPA Technical Committee Document Proposal Form

Note: All proposals must be received by 5:00 p.m. EST/EDST on the published proposal closing date.

For further information on the standards-making process, please contact Codes and Standards Administration at 617-984-7249. For technical assistance, please call NFPA at 617-770-3000.

FOR OFFICE USE ONLY
Log #: _____
Date Rec'd: _____

Please indicate in which format you wish to receive your ROP/ROC: ☐ **CD ROM** ☐ **paper** ☐ **download**
(Note: In choosing the download option you intend to view the ROP/ROC from our Website. No copy will be sent to you.)

Date _____ **Name** _____ **Telephone** _____
Company _____
Address _____ **City** _____ **State** _____ **Zip** _____
Please indicate organization represented (if any) _____

1. **a) NFPA Document Title** _____
   b) NFPA No. & Edition _____ **c) Section/Paragraph** _____

2. **Proposal Recommends:** *(check one)* ☐ **new text** ☐ **revised text** ☐ **deleted text**

3. **Proposal.** *(Include proposed new or revised wording, or identification of wording to be deleted.)* Note: Proposed text should be in legislative format, that is, use underscore to denote wording to be inserted (inserted wording) and strike-through to denote wording to be deleted (~~deleted wording~~). _____

4. **Statement of Problem and Substantiation for Proposal.** Note: State the problem that will be resolved by your recommendation. Give the specific reason for your proposal including copies of tests, research papers, fire experience, etc. If more than 200 words, it may be abstracted for publication. _____

5. ☐ **This Proposal is Original Material.** Note: Original material is considered to be the submitter's own idea based on or as a result of his/her own experience, thought, or research and, to the best of his/her knowledge, is not copied from another source.

   ☐ **This Proposal is Not Original Material; Its Source *(if known)* is as Follows:** _____

I hereby grant the NFPA all and full rights in copyright to this proposal, and I understand that I acquire no rights in any publication of NFPA in which this proposal in this or another similar or analogous form is used.

Signature *(Required)* _____

PLEASE USE SEPARATE FORM FOR EACH PROPOSAL • NFPA FAX (617) 770-3500

Mail to: Secretary, Standards Council • NFPA • 1 Batterymarch Park • PO Box 9101 • Quincy, MA 02269-9101

Copyright National Fire Protection Association
Provided by IHS under license with NFPA
No reproduction or networking permitted without license from IHS
Not for Resale