NFPA 1932

Standard on Use, Maintenance, and Service Testing of In-Service Fire Department Ground Ladders

2004 Edition

NFPA, 1 Batterymarch Park, Quincy, MA 02169-7471
An International Codes and Standards Organization

Copyright National Fire Protection Association
Provided by IHS under license with NFPA
No reproduction or networking permitted without license from IHS

Not for Resale

IMPORTANT NOTICES AND DISCLAIMERS CONCERNING NFPA DOCUMENTS

NOTICE AND DISCLAIMER OF LIABILITY CONCERNING THE USE OF NFPA DOCUMENTS

NFPA codes, standards, recommended practices, and guides, of which the document contained herein is one, are developed through a consensus standards development process approved by the American National Standards Institute. This process brings together volunteers representing varied viewpoints and interests to achieve consensus on fire and other safety issues. While the NFPA administers the process and establishes rules to promote fairness in the development of consensus, it does not independently test, evaluate, or verify the accuracy of any information or the soundness of any judgments contained in its codes and standards.

The NFPA disclaims liability for any personal injury, property or other damages of any nature whatsoever, whether special, indirect, consequential or compensatory, directly or indirectly resulting from the publication, use of, or reliance on this document. The NFPA also makes no guaranty or warranty as to the accuracy or completeness of any information published herein.

In issuing and making this document available, the NFPA is not undertaking to render professional or other services for or on behalf of any person or entity. Nor is the NFPA undertaking to perform any duty owed by any person or entity to someone else. Anyone using this document should rely on his or her own independent judgment or, as appropriate, seek the advice of a competent professional in determining the exercise of reasonable care in any given circumstances.

The NFPA has no power, nor does it undertake, to police or enforce compliance with the contents of this document. Nor does the NFPA list, certify, test or inspect products, designs, or installations for compliance with this document. Any certification or other statement of compliance with the requirements of this document shall not be attributable to the NFPA and is solely the responsibility of the certifier or maker of the statement.

Copyright National Fire Protection Association
Provided by IHS under license with NFPA
No reproduction or networking permitted without license from IHS
Not for Resale

ADDITIONAL NOTICES AND DISCLAIMERS

Updating of NFPA Documents

Users of NFPA codes, standards, recommended practices, and guides should be aware that these documents may be superseded at any time by the issuance of new editions or may be amended from time to time through the issuance of Tentative Interim Amendments. An official NFPA document at any point in time consists of the current edition of the document together with any Tentative Interim Amendments and any Errata then in effect. In order to determine whether a given document is the current edition and whether it has been amended through the issuance of Tentative Interim Amendments or corrected through the issuance of Errata, consult appropriate NFPA publications such as the National Fire Codes® Subscription Service, visit the NFPA website at www.nfpa.org, or contact the NFPA at the address listed below.

Interpretations of NFPA Documents

A statement, written or oral, that is not processed in accordance with Section 6 of the Regulations Governing Committee Projects shall not be considered the official position of NFPA or any of its Committees and shall not be considered to be, nor be relied upon as, a Formal Interpretation.

Patents

The NFPA does not take any position with respect to the validity of any patent rights asserted in connection with any items which are mentioned in or are the subject of NFPA codes, standards, recommended practices, and guides, and the NFPA disclaims liability for the infringement of any patent resulting from the use of or reliance on these documents. Users of these documents are expressly advised that determination of the validity of any such patent rights, and the risk of infringement of such rights, is entirely their own responsibility.

NFPA adheres to applicable policies of the American National Standards Institute with respect to patents. For further information contact the NFPA at the address listed below.

Law and Regulations

Users of these documents should consult applicable federal, state, and local laws and regulations. NFPA does not, by the publication of its codes, standards, recommended practices, and guides, intend to urge action that is not in compliance with applicable laws, and these documents may not be construed as doing so.

Copyrights

This document is copyrighted by the NFPA. It is made available for a wide variety of both public and private uses. These include both use, by reference, in laws and regulations, and use in private self-regulation, standardization, and the promotion of safe practices and methods. By making this document available for use and adoption by public authorities and private users, the NFPA does not waive any rights in copyright to this document.

Use of NFPA documents for regulatory purposes should be accomplished through adoption by reference. The term "adoption by reference" means the citing of title, edition, and publishing information only. Any deletions, additions, and changes desired by the adopting authority should be noted separately in the adopting instrument. In order to assist NFPA in following the uses made of its documents, adopting authorities are requested to notify the NFPA (Attention: Secretary, Standards Council) in writing of such use. For technical assistance and questions concerning adoption of NFPA documents, contact NFPA at the address below.

For Further Information

All questions or other communications relating to NFPA codes, standards, recommended practices, and guides and all requests for information on NFPA procedures governing its codes and standards development process, including information on the procedures for requesting Formal Interpretations, for proposing Tentative Interim Amendments, and for proposing revisions to NFPA documents during regular revision cycles, should be sent to NFPA headquarters, addressed to the attention of the Secretary, Standards Council, NFPA, 1 Batterymarch Park, P.O. Box 9101, Quincy, MA 02269-9101.

For more information about NFPA, visit the NFPA website at www.nfpa.org.

Copyright National Fire Protection Association
Provided by IHS under license with NFPA
No reproduction or networking permitted without license from IHS
Not for Resale

Copyright © 2004, National Fire Protection Association, All Rights Reserved

NFPA 1932

Standard on

Use, Maintenance, and Service Testing of In-Service Fire Department Ground Ladders

2004 Edition

This edition of NFPA 1932, *Standard on Use, Maintenance, and Service Testing of In-Service Fire Department Ground Ladders*, was prepared by the Technical Committee on Fire Department Ground Ladders, and acted on by NFPA at its May Association Technical Meeting held May 23–26, 2004, in Salt Lake City, UT. It was issued by the Standards Council on July 16, 2004, with an effective date of August 5, 2004, and supersedes all previous editions.

This edition of NFPA 1932 was approved as an American National Standard on August 5, 2004.

Origin and Development of NFPA 1932

In 1958, new material was added to NFPA 193, *Standard Procedures for Aerial Ladder Testing*, to cover the care, maintenance, and testing of fire department ground ladders. Subsequent editions were published in 1959 and 1972.

In 1975, NFPA 193 was separated into two documents, NFPA 1931, *Standard on Fire Department Ground Ladders*, and NFPA 1904, *Recommended Practice for the Maintenance, Care, Testing and Use of Fire Department Aerial Ladders and Elevating Platforms.*

The 1979 edition of NFPA 1931 incorporated extensive revisions, including editorial and style changes.

In 1984, the text of NFPA 1931 was again divided into two documents. NFPA 1931 contained the requirements for the design and design verification testing for new ground ladders, and NFPA 1932 contained the requirements for the use, maintenance, and service testing of fire department ground ladders. The strength requirements for new ground ladders were increased in NFPA 1931 and the loads used for in-service testing of ground ladders were increased based on research that indicated that ground ladders needed to handle greater loads. An exception allowed the authority having jurisdiction to use a reduced test weight for the horizontal bending test for extension ladders built prior to 1984 with a restriction on the use of those ladders while phasing in the more stringent testing requirement.

The 1989 edition added requirements for routine maintenance as well as additional cautions regarding accidental heating of ladders. The horizontal bending test for folding ladders was added. The horizontal bending test for extension ladders was modified to reflect changes determined acceptable from field experience with the use of the test method.

The 1994 edition removed the exception that allowed the authority having jurisdiction to use a reduced test weight for the horizontal bending test for extension ladders built prior to 1984. The standard was revised to keep it up to date, including adding requirements for retrofitting heat sensor labels after appropriate testing.

The 1999 edition incorporated minor editorial revisions and rearranged the document to better organize the material.

With this edition, the title has changed to *Standard on Use, Maintenance, and Service Testing of In-Service Fire Department Ground Ladders* to better reflect that this is a standard that pertains to the ladder after it has been put in service. The document has been reorganized according to the current NFPA *Manual of Style*, and ambiguous wording has been clarified. An alternate method for loading a ladder during the horizontal bending test is now permitted. The maximum temperature that ladders can be subjected to under non-fire conditions has been reduced to 212°F (100°C). The optional hardness test has been deleted. The conditions for removal of ground ladders from service because of failing inspections or testing have been clarified.

--`,,,,,,`-`-`,,`,,`,`,,`---

Copyright National Fire Protection Association
Provided by IHS under license with NFPA
No reproduction or networking permitted without license from IHS

Not for Resale

Technical Committee on Fire Department Ground Ladders

Brian D. Berchtold, *Chair*
Galloway Township Volunteer Fire Department, NJ [U]

David R. Bouchard, Fire Consulting Associates Inc., RI [SE]
Boyd F. Cole, SunnyCor Inc./SmartCoat Inc., CA [M]
Samuel C. Cramer, Aluminum Ladder Company, SC [M]
Sheperd Neil Harper, City of Vacaville Fire Department, CA [U]
Tom Hillenbrand, Underwriters Laboratories Inc., IL [RT]
Kathy McGrade, FailSafe Testing, CA [RT]
A. K. Rosenhan, Mississippi State University, MS [SE]
Philip Schwab, Duo-Safety Ladder Corporation, WI [M]

Alternate

James Johannessen, Underwriters Laboratories Inc., PA [RT]
(Alt. to T. Hillenbrand)

Carl E. Peterson, NFPA Staff Liaison

This list represents the membership at the time the Committee was balloted on the final text of this edition. Since that time, changes in the membership may have occurred. A key to classifications is found at the back of the document.

NOTE: Membership on a committee shall not in and of itself constitute an endorsement of the Association or any document developed by the committee on which the member serves.

Committee Scope: This Committee shall have primary responsibility for documents on the design, inspection, testing, and use of ground ladders for the fire service.

--`,,,,,,-`-`,,`,,`,`,,`---

Copyright National Fire Protection Association
Provided by IHS under license with NFPA
No reproduction or networking permitted without license from IHS
Not for Resale

Contents

Chapter 1 Administration **1932–** 4
1.1 Scope **1932–** 4
1.2 Purpose **1932–** 4
1.3 Application **1932–** 4

Chapter 2 Referenced Publications **1932–** 4
2.1 General **1932–** 4
2.2 NFPA Publication **1932–** 4
2.3 Other Publications **1932–** 4

Chapter 3 Definitions **1932–** 4
3.1 General **1932–** 4
3.2 NFPA Official Definitions **1932–** 4
3.3 General Definitions **1932–** 4

Chapter 4 Ground Ladder Mounting and Storage **1932–** 5
4.1 Requirements for Mounting of Ground Ladders **1932–** 5
4.2 Requirements for Storage of Ground Ladders **1932–** 5

Chapter 5 Use of Ground Ladders **1932–** 5
5.1 Requirements for All Ground Ladders **1932–** 5
5.2 Additional Requirements for Extension Ladders **1932–** 6
5.3 Additional Requirements for Metal Ground Ladders **1932–** 6
5.4 Additional Requirements for Wood Ground Ladders **1932–** 6
5.5 Additional Requirements for Fiberglass Ground Ladders **1932–** 6

Chapter 6 Inspection and Maintenance of Ground Ladders **1932–** 6
6.1 Inspection of Ground Ladders **1932–** 6
6.2 Maintenance of Ground Ladders **1932–** 7

Chapter 7 Service Testing of Ground Ladders ... **1932–** 7
7.1 Requirements for All Ground Ladders **1932–** 7
7.2 Service Testing Requirements for All Ladders Except Pompier and Folding Ladders **1932–** 8
7.3 Service Testing Requirements for Pompier Ladders **1932–**10
7.4 Service Testing Requirements for Folding Ladders **1932–**11

Annex A Explanatory Material **1932–**12

Annex B Informational References **1932–**14

Index **1932–**15

--`,,,,,,-`-`,,`,,`,`,,`---
Copyright National Fire Protection Association
Provided by IHS under license with NFPA
No reproduction or networking permitted without license from IHS
Not for Resale

NFPA 1932

Standard on

Use, Maintenance, and Service Testing of In-Service Fire Department Ground Ladders

2004 Edition

IMPORTANT NOTE: This NFPA document is made available for use subject to important notices and legal disclaimers. These notices and disclaimers appear in all publications containing this document and may be found under the heading "Important Notices and Disclaimers Concerning NFPA Documents." They can also be obtained on request from NFPA or viewed at www.nfpa.org/disclaimers.

NOTICE: An asterisk (*) following the number or letter designating a paragraph indicates that explanatory material on the paragraph can be found in Annex A.

A reference in brackets [ ] following a section or paragraph indicates material that has been extracted from another NFPA document. As an aid to the user, the complete title and edition of the source documents for mandatory extracts are given in Chapter 2 and those for nonmandatory extracts are given in Annex B. Editorial changes to extracted material consist of revising references to an appropriate division in this document or the inclusion of the document number with the division number when the reference is to the original document. Requests for interpretations or revisions of extracted text shall be sent to the technical committee responsible for the source document.

Information on referenced publications can be found in Chapter 2 and Annex B.

Chapter 1 Administration

1.1* Scope. This standard specifies requirements for the use, maintenance, inspection, and service testing of fire department ground ladders.

1.2* Purpose.

1.2.1 The purpose of this standard is to provide requirements for the use, maintenance, and service testing of fire department ground ladders that will result in reasonable safety for fire fighters and victims during the use of those ground ladders.

1.2.2 This standard also provides users of fire department ground ladders with a means to determine if in-service fire department ground ladders are fit for continued service.

1.3* Application. This standard applies to all ground ladders, regardless of year of manufacture, used by fire departments for rescue, fire-fighting operations, and training.

Chapter 2 Referenced Publications

2.1 General. The documents or portions thereof listed in this chapter are referenced within this standard and shall be considered part of the requirements of this document.

2.2 NFPA Publication. National Fire Protection Association, 1 Batterymarch Park, Quincy, MA 02169-7471.

NFPA 1931, *Standard for Manufacturer's Design of Fire Department Ground Ladders,* 2004 edition.

2.3 Other Publications. (Reserved)

Chapter 3 Definitions

3.1 General. The definitions contained in this chapter shall apply to the terms used in this standard. Where terms are not included, common usage of the terms shall apply.

3.2 NFPA Official Definitions.

3.2.1* Approved. Acceptable to the authority having jurisdiction.

3.2.2* Authority Having Jurisdiction (AHJ). An organization, office, or individual responsible for enforcing the requirements of a code or standard, or for approving equipment, materials, an installation, or a procedure.

3.2.3 Shall. Indicates a mandatory requirement.

3.2.4 Should. Indicates a recommendation or that which is advised but not required.

3.2.5 Standard. A document, the main text of which contains only mandatory provisions using the word "shall" to indicate requirements and which is in a form generally suitable for mandatory reference by another standard or code or for adoption into law. Nonmandatory provisions shall be located in an appendix or annex, footnote, or fine-print note and are not to be considered a part of the requirements of a standard.

3.3 General Definitions.

3.3.1 Angle of Inclination. The angle incorporated between the beams and a level plane. [**1931**:3.3]

3.3.2 Base (Bed) Section. The lowest or widest section of an extension ladder. [**1931**:3.3]

3.3.3 Beam (Side Rail). The main structural side of the ground ladder. [**1931**:3.3]

3.3.4 Bedded Position. The position in which the fly section(s) of an extension ladder is fully retracted with the pawls engaged. [**1931**:3.3]

3.3.5* Butt. The end of the beam that is placed on the ground, or other lower support surface, when ground ladders are in the raised position. [**1931**:3.3]

3.3.6* Butt Spurs (Feet). That component of ground ladder support that is in contact with the lower support surface to reduce slippage. [**1931**:3.3]

3.3.7 Collapsible Ladder. See 3.3.15, Folding Ladder.

3.3.8 Combination Ladder. A ground ladder that is capable of being used as both a stepladder and as a single or extension ladder. [**1931**:3.3]

3.3.9 Designated Length. The length marked on the ladder. [**1931**:3.3]

3.3.10 Dogs. See 3.3.22, Pawls.

3.3.11 Duty Rating. The maximum load the ladder is designed to support when it is in use and properly positioned. [**1931**:3.3]

Copyright National Fire Protection Association
Provided by IHS under license with NFPA
No reproduction or networking permitted without license from IHS
Not for Resale

3.3.12 Extension Ladder. A non-self-supporting ground ladder that consists of two or more sections traveling in guides, brackets, or the equivalent arranged so as to allow length adjustment. [**1931**:3.3]

3.3.13 Fire Department Ground Ladder. Any portable ladder specifically designed for fire department use in rescue, fire-fighting operations, or training. [**1931**:3.3]

3.3.14 Fly Section(s). The upper section(s) of an extension ladder. [**1931**:3.3]

3.3.15 Folding Ladder. A single-section ladder with rungs that can be folded or moved to allow the beams to be brought into a position touching or nearly touching each other. [**1931**:3.3]

3.3.16* Free Weight. Test weights that are not controlled from any direction except by the force of gravity.

3.3.17 Halyard. Rope used on extension ladders for the purpose of raising a fly section(s). [**1931**:3.3]

3.3.18 Heat Sensor Label. A label that changes color at a preset temperature to indicate a specific heat exposure. [**1931**:3.3]

3.3.19 In Service. The status of a fire department ground ladder that has been inspected, maintained, and tested and currently is in use or available for use.

3.3.20 Ladder. A device consisting of two beams (side rails) joined at regular intervals by cross pieces called rungs on which a person is supported during climbs for ascending or descending. *(See also 3.3.24, Pompier Ladder.)* [**1931**:3.3]

3.3.21 Maximum Extended Length. The total length of the extension ladder when all fly sections are fully extended and all pawls are engaged. [**1931**:3.3]

3.3.22 Pawls. Devices attached to a fly section(s) to engage ladder rungs near the beams of the section below for the purpose of anchoring the fly section(s). [**1931**:3.3]

3.3.23 Permanent Deformation. That deformation remaining in any part of a ladder or its components after all test loads have been removed from the ladder. [**1931**:3.3]

3.3.24 Pompier Ladder (Scaling Ladder). A ladder having a single center beam only, with rungs protruding on either side of the beam, and with a large hook on top that is used for scaling. [**1931**:3.3]

3.3.25 Roof Ladder. A single ladder equipped with hooks at the top end of the ladder. [**1931**:3.3]

3.3.26 Rungs. The ladder cross pieces on which a person steps while ascending or descending. [**1931**:3.3]

3.3.27 Scaling Ladder. See 3.3.24, Pompier Ladder.

3.3.28 Service Tests. Tests performed on a ground ladder to determine if it meets the standard for continued service.

3.3.29 Side Rail. See 3.3.3, Beam.

3.3.30 Single Ladder. A non-self-supporting ground ladder, nonadjustable in length, consisting of only one section. [**1931**:3.3]

3.3.31 Staypoles (Tormentors). Poles attached to each beam of the base section of extension ladders and used to assist in raising the ladder and to help provide stability of the raised ladder. [**1931**:3.3]

3.3.32 Tested. Verification of compliance with test requirements as specified in this standard.

3.3.33 Tormentors or Tormentor Poles. See 3.3.31, Staypoles.

3.3.34 Ultimate Failure. Collapse of a ground ladder structure or component thereof. [**1931**:3.3]

3.3.35 Visible Damage. A permanent change in condition that is clearly evident by visual inspection without recourse to optical measuring or observation devices. [**1931**:3.3]

3.3.36 Visual Inspection. Observation by eye unaided by optical devices, except prescription eyeglasses or lenses. [**1931**:3.3]

3.3.37 Working Length. The length of a non-self-supporting portable ladder measured along the beams from the base support point of the ladder to the point of bearing at the top.

Chapter 4 Ground Ladder Mounting and Storage

4.1 Requirements for Mounting of Ground Ladders.

4.1.1 The storage positions and mounting brackets for ground ladders shall be designed such that the ladders do not need to be forced into their mounting or storage positions on the fire apparatus.

4.1.2 Ground ladders shall be mounted and protected to prevent movement, abrasion, or other damage to the ground ladder while they are on the fire apparatus.

4.1.3 When mounted on the apparatus, ground ladders shall not be subject to exposure to heat sources (such as engine heat) of 100°C (212°F) or greater.

4.1.4 Ground ladders shall be supported to prevent any sagging or distortion while they are mounted on the fire apparatus.

4.1.5 The rollers and other moving parts of the frame holding the ground ladders on the apparatus shall be lubricated in accordance with the apparatus manufacturer's instructions at least every 6 months.

4.1.5.1 Prior to relubricating rollers or moving parts, old lubricant shall be removed.

4.1.5.2 If rollers and other moving parts are rusted, they shall be brushed with a wire brush and cleaned to remove all loose scale, and then painted before lubricating.

4.2 Requirements for Storage of Ground Ladders.

4.2.1 Ground ladders shall not be stored in an area where they are exposed to the elements.

4.2.2* Wood ground ladders shall be stored away from heat sources such as steam pipes, radiators, forced hot air heaters, and out of direct sunlight.

4.2.3* Fiberglass ground ladders shall be stored out of direct sunlight.

Chapter 5 Use of Ground Ladders

5.1 Requirements for All Ground Ladders.

5.1.1* Fire department ground ladders shall be used for rescue, fire-fighting operations, and training and shall not be used for any other purpose.

Copyright National Fire Protection Association
Provided by IHS under license with NFPA
No reproduction or networking permitted without license from IHS
Not for Resale

5.1.2* Ground Ladder Loading.

5.1.2.1 The total weight on the ground ladder, including persons, their equipment, and any other weight, such as a charged fire hose, shall not exceed the duty rating as given in Table 5.1.2.1.

Table 5.1.2.1 Ground Ladder Duty Rating

Type	Maximum Load	
	kg	lb
Folding ladders	136	300
Pompier ladders	136	300
Single and roof ladders	340	750
All extension ladders	340	750
Combination ladders	340	750

5.1.2.2 The loads in Table 5.1.2.1 shall not be imposed on the ground ladder unless the ground ladder is set at the correct angle of inclination and secured as specified in Section 5.1.

5.1.3 Inspections.

5.1.3.1 Ground ladders shall be visually inspected in accordance with Section 6.1 after each use.

5.1.3.2 If ground ladders are used other than as specified in this standard, they shall be removed from service, inspected, and service tested prior to further use.

5.1.4 Ground ladders shall not be tied together to provide longer units.

5.1.5 Ground ladder butts shall be set on a firm, level base before ground ladders are used.

5.1.6 Ground ladders shall not be placed on ice, snow, or slippery surfaces unless means to prevent slipping are employed.

5.1.7 Angle of Inclination.

5.1.7.1 To provide the optimum combination of load carrying and stability, ground ladders shall be set at the correct angle of inclination by positioning the base section a horizontal distance from the vertical wall equal to one-quarter the working length of the ground ladder.

5.1.7.2* An angle of inclination of between 70 and 76 degrees shall be permitted, with an angle of 75½ degrees being optimum.

5.1.8* Ground ladders shall be secured at the base, either by a fire fighter or by mechanical means, to prevent slippage.

5.1.8.1* Extreme caution shall be used when the angle of inclination is less than 70 degrees.

5.1.8.2 At angles less than 70 degrees, mechanical means shall be used to prevent slippage.

5.1.9 Any time a ladder is positioned or repositioned, a visual determination that the pawls are correctly latched shall be made before the ladder is climbed.

5.1.10 Ground ladders shall be secured at the top, to prevent slippage, by the first person to climb the ladder.

5.1.11 Raised ground ladders shall not be slid along cornices or roof edges.

5.1.12 After the ground ladder is initially set or placed, it shall not be "rolled" beam-over-beam to reach a new position.

5.1.13 Raised ground ladders shall not be repositioned from the top, nor shall they be repositioned while a person is on the ladder.

5.1.14 Ground ladders that have been removed from their storage location on the apparatus shall not be exposed to non–fire related heat sources (such as from the apparatus exhaust pipe) of 100°C (212°F) or greater.

5.2 Additional Requirements for Extension Ladders.

5.2.1 Fly sections of extension ladders shall not be used as single ladders unless they have been designed and tested in accordance with NFPA 1931, *Standard for Manufacturer's Design of Fire Department Ground Ladders*, for single ladder use.

5.2.2 Extension ladders shall be used in the fly-up, fly away from the building position unless otherwise specified by the manufacturer.

5.2.3* Halyards on extension ladders shall be tied off to the base section or shall be otherwise secured before the ground ladder is climbed.

5.2.4 Length adjustments shall not be made from the top of extension ladders.

5.2.5 If an extension ladder is equipped with staypoles, the staypoles shall be placed to act as stabilizers and shall not be placed so as to become load-bearing members under no-load conditions (no one on the ladder).

5.2.6* If an extension ladder is equipped with staypoles and both poles cannot be properly placed due to obstructions or terrain, then neither staypole shall be placed.

5.3 Additional Requirements for Metal Ground Ladders.

5.3.1 Extreme caution shall be used when work occurs around charged electrical circuits because metal ground ladders conduct electricity.

5.3.2 All metal ground ladders shall be kept away from power lines or other potential electrical hazards.

5.4* Additional Requirements for Wood Ground Ladders. Extreme caution shall be used around electrical hazards because wet wood ground ladders can conduct electricity.

5.5* Additional Requirements for Fiberglass Ground Ladders. Extreme caution shall be used around electrical hazards because wet fiberglass ground ladders can conduct electricity.

Chapter 6 Inspection and Maintenance of Ground Ladders

6.1 Inspection of Ground Ladders.

6.1.1 All ground ladders shall be inspected in accordance with the manufacturer's recommendations.

6.1.2 Ground ladders shall be visually inspected at least once every month and after each use.

Copyright National Fire Protection Association
Provided by IHS under license with NFPA
No reproduction or networking permitted without license from IHS
Not for Resale

6.1.3 A visual inspection shall include, but not be limited to, the following:

(1) Heat sensor labels on metal and fiberglass ladders, and on wood ladders if provided, for a change indicating heat exposure
(2) All rungs, for snugness and tightness
(3) All bolts and rivets, for tightness; bolts on wood ladders, for snugness and tightness without crushing the wood
(4) Welds, for any cracks or apparent defects
(5) Beams and rungs, for cracks, splintering, breaks, gouges, checks, wavy conditions, or deformation
(6) Butt spurs, for excessive wear or other defects
(7) Halyards, for fraying or kinking
(8) Roof hooks, for sharpness and proper operation
(9) Rungs, for punctures, wavy conditions, worn serrations, or deformation
(10) Surface corrosion
(11) Ladder slide areas, for galling or absence of wax, if required by the manufacturer
(12) Loss of gloss on fiberglass and wood ladder beams, damage to the varnish finish on wood ground ladders
(13) Correct operation of the pawl assemblies
(14) Wire rope on 3- and 4-section ladders for snugness when the ladder is in the bedded position, to ensure proper synchronization of upper sections during operation
(15)*Labels present and legible
(16) Ladders clean with no buildup of grease, dirt, or grime on the beams

6.1.4 The ground ladder shall be removed from service if there are any signs of damage beyond gouges or dents or if defective parts or welds are discovered during the visual inspection.

6.1.4.1* If the ground ladder is removed from service, it shall be obviously marked as "out of service" with the date and a description of the defect requiring the ladder to be removed from service.

6.1.4.2 The ladder shall be repaired in accordance with the manufacturer's instructions, and service tested in accordance with Section 7.2, Section 7.3, or Section 7.4 as applicable, before it is returned to service, or it shall be destroyed.

6.1.5 Gouges and Dents.

6.1.5.1 If gouges and dents are discovered during the visual inspection, the ladder shall be subjected to the applicable load test as specified in Chapter 7.

6.1.5.2 Gouges and dents shall not be cause to fail a ladder if it passes the applicable load test.

6.1.6 If a wood ground ladder develops dark streaks in the beams, the ladder shall be removed from service and shall be service tested as specified in Chapter 7 prior to further use.

6.2 Maintenance of Ground Ladders.

6.2.1 All ground ladders shall be maintained in accordance with the manufacturer's recommendations.

6.2.2 Temporary repairs of damaged or missing ladder parts shall not be made.

6.2.3 Wood ground ladders shall be maintained as free of moisture as possible and shall be wiped dry after being sprayed with water or used in the rain.

6.2.4 Ground ladders shall not be painted except for the top and bottom 460 mm (18 in.) of each section for purposes of identification or visibility.

6.2.5* Pawl assemblies on extension ladders shall be kept clean and lubricated in accordance with the manufacturer's instructions.

6.2.6 Ladder slide areas on extension ladders shall be kept lubricated in accordance with the manufacturer's instructions.

6.2.7* Halyards and wire rope on extension ladders shall be replaced when they become frayed or kinked.

6.2.8 Folding roof hook assemblies on roof ladders shall be kept operational by removing rust and other contaminants and by keeping the mechanisms lubricated.

6.2.9 The surface finish on ground ladders shall be maintained in accordance with the ladder manufacturer's recommendations.

6.2.10 Heat Sensor Labels.

6.2.10.1 If the heat sensor label has an expiration date and that date has passed, or there is no date on the label, the heat sensor label shall be replaced.

6.2.10.2 If the ladder is constructed of metal or fiberglass materials and does not have heat sensor labels, the ladder shall be tested in accordance with Chapter 7.

6.2.10.2.1 If the ladder passes all the tests, heat sensor labels shall be applied to the ladder.

6.2.10.2.2 For all ladders except folding ladders, the heat sensor labels shall be located on the inside of each beam of each section immediately below the second rung from the tip of each section and in the center of that section.

6.2.10.2.3 For folding ladders, the heat sensor labels shall be permitted to be applied to either the inside or outside of the ladder and shall be located immediately below the second rung from the tip of the ladder and in the center of the ladder.

Chapter 7 Service Testing of Ground Ladders

7.1 Requirements for All Ground Ladders.

7.1.1* The service tests specified in this standard and any additional tests approved by the ground ladder manufacturer shall be the only tests conducted by fire department personnel, or other testing personnel, on in-service fire department ground ladders.

WARNING: Never use test protocols from NFPA 1931, *Standard for Manufacturer's Design of Fire Department Ground Ladders*, as they will damage the ladder.

7.1.2* The service tests for ground ladders specified in this chapter shall be conducted by the fire department or by an organization that is acceptable to the authority having jurisdiction.

7.1.3* Personnel performing service tests on ground ladders shall take all possible personal safety precautions.

WARNING: A sudden failure of a ground ladder undergoing service testing could result in personal injury.

Copyright National Fire Protection Association
Provided by IHS under license with NFPA
No reproduction or networking permitted without license from IHS
Not for Resale

7.1.4 All test loads shall be applied to a ladder in a manner so as to avoid any shock or impact loading.

7.1.5 If the ground ladder shows any signs of failure during service testing, it shall be removed from service.

7.1.6 All ground ladders shall be service tested on the following schedule:

(1) Before the ladder is placed in service for the first time
(2) At least annually
(3) At any time a ladder is suspected of being unsafe
(4) After the ladder has been subjected to overloading *(see Table 5.1.2.1)*
(5) After the ladder has been subjected to impact loading or unusual conditions of use
(6)*Whenever the ladder has been exposed or is suspected of having been exposed to direct flame contact
(7) Whenever the heat sensor label has changed to indicate heat exposure
(8) After any repairs have been completed, unless the only repair was replacing the halyard

7.1.6.1 All ground ladders, except pompier ladders and folding ladders, shall be service tested as specified in Section 7.2.

7.1.6.2 Pompier ladders shall be service tested as specified in Section 7.3.

7.1.6.3 Folding ladders shall be service tested as specified in Section 7.4.

7.1.7 All service test results shall be permanently recorded. Minimum information recorded shall be as required in Figure 7.1.7.

7.1.8 If the ground ladder does not meet the requirements of this chapter, the ladder shall be removed from service.

7.1.8.1* The ground ladder shall be obviously marked as "out of service" with the date and a description of the defect that required the ladder to be removed from service.

7.1.8.2 The ladder shall be repaired in accordance with the manufacturer's instructions, and service tested in accordance with Section 7.2, Section 7.3, or Section 7.4 as applicable, before it is returned to service, or it shall be destroyed.

7.2 Service Testing Requirements for All Ladders Except Pompier and Folding Ladders.

7.2.1* Horizontal Bending Test.

7.2.1.1 The ladder shall be placed in a flat horizontal position and supported 150 mm (6 in.) from each end of the ladder as shown in Figure 7.2.1.1.

7.2.1.1.1 The supports shall be high enough that the ladder does not touch the floor or other surface during the test.

7.2.1.1.2 The ladder shall not be tied, strapped, or otherwise fastened to the supports.

7.2.1.2 Extension and Combination Ladders.

7.2.1.2.1 Extension and combination ladders shall be extended to their maximum extended length, with pawls engaged.

7.2.1.2.2 Straps or other ties that do not increase the strength of the ladder shall be permitted to be used to ensure that the ladder pawls remain engaged during the test.

7.2.1.3 All test loads shall be applied equally across the beams of the ladder and 406 mm (16 in.) each side of the lengthwise center inclusive.

7.2.1.3.1 If free weights are used, they shall be applied in increments consistent with safety and ease of handling to a flat test surface resting on the beams.

7.2.1.3.2 If a test fixture is used with a dynamometer, the test fixture shall be designed to apply the load over the required area in a manner that allows a load shift to a weak beam and does not restrain the load directionally.

7.2.1.3.3 All test loads shall include the weight of the test surface.

7.2.1.4 Metal and Fiberglass Ground Ladders. Metal and fiberglass ground ladders shall be tested in accordance with 7.2.1.4.1 through 7.2.1.4.8.

7.2.1.4.1 The ladder shall be loaded with a preload of 159 kg (350 lb) that shall remain in place for at least 1 minute to "set" the ladder prior to the completion of the rest of the test.

7.2.1.4.2 The preload shall be removed, and the distance between the bottom edge of each beam and the surface upon which the ladder supports are placed shall be measured at the lengthwise center of the ladder.

7.2.1.4.3 The ladder shall be loaded with a test load of 227 kg (500 lb) that shall remain in place for 5 minutes.

7.2.1.4.4 The test load shall then be removed and the ladder allowed to rest for 5 minutes.

7.2.1.4.5 The distance between the bottom of each beam and the surface upon which the ladder supports are placed shall be measured at the same spot that the measurements were taken in 7.2.1.4.2.

7.2.1.4.6 Differences in measurements taken in 7.2.1.4.2 and 7.2.1.4.5 shall not exceed those values shown in Table 7.2.1.4.6.

Table 7.2.1.4.6 Allowable Differences in Horizontal Bending Test Recovery

Designated Length of Ladder		Difference in Measurements	
m	**ft**	**mm**	**in.**
7.6 or less	25 or less	12.7	½
7.7–10.4	26–34	25.4	1
10.5 or over	35 or over	38.1	1½

7.2.1.4.7 There shall be no visible permanent change or failure of any hardware.

7.2.1.4.8 Any ladder that exceeds the allowable difference in horizontal bending test recovery, has visible permanent change, or has failure of any hardware shall be removed from service.

7.2.1.5 Wood Ground Ladders. Wood ground ladders shall be tested in accordance with 7.2.1.5.1 through 7.2.1.5.3.

7.2.1.5.1 The ladder shall be loaded with a test load of 227 kg (500 lb) that shall remain in place for 5 minutes and then be removed.

Copyright National Fire Protection Association
Provided by IHS under license with NFPA
No reproduction or networking permitted without license from IHS
Not for Resale

FIRE DEPARTMENT GROUND LADDER TEST RECORD

Manufacturer's ladder identification number or code _____

Fire department identification (if different) _____

Ground ladder manufacturer _____

Fire department company where ground ladder is assigned _____

Date purchased _____

Date placed in service _____

TYPE OF GROUND LADDER

- ❑ Single
- ❑ Roof
- ❑ Extension
- ❑ Combination
- ❑ Folding
- ❑ Pompier

LADDER CONSTRUCTION

- ❑ Wood
- ❑ Metal
- ❑ Fiberglass
- ❑ Solid beam
- ❑ Truss beam

Heat sensor label inspection _____

Previous repair(s), reason for repair, and date of repair _____

_____

_____

Type of test, test date, and person(s) performing test _____

_____

Reason for test _____

TEST RESULTS

Horizontal bending test ❑ Passed ❑ Failed

Amount of permanent deformation _____

Hardware test ❑ Passed ❑ Failed

Roof hook test ❑ Passed ❑ Failed

Pompier ladder test ❑ Passed ❑ Failed

Repairs needed _____

_____

Repairs completed _____

_____

Person(s) performing repairs _____

Date completed _____

Person signing record _____

© 2004 National Fire Protection Association NFPA 1932 (p. 1 of 1)

FIGURE 7.1.7 Sample Fire Department Ground Ladder Test Record.

Copyright National Fire Protection Association
Provided by IHS under license with NFPA
No reproduction or networking permitted without license from IHS
Not for Resale

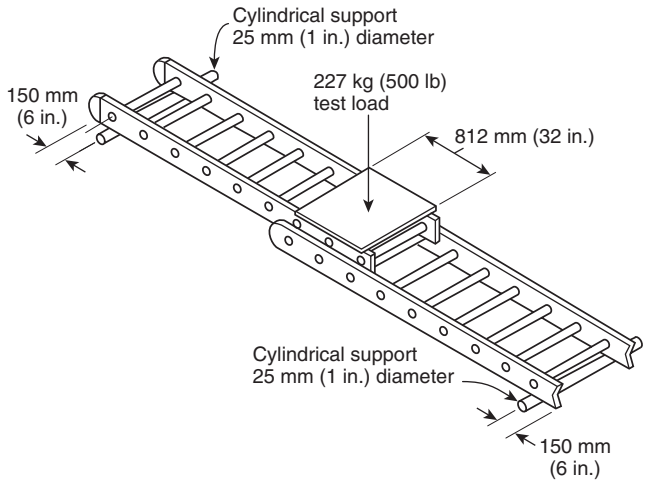

FIGURE 7.2.1.1 Extension Ladder Positioned for Horizontal Bending Test.

7.2.1.5.2 To pass the test, the ladder and its components shall not show ultimate failure.

7.2.1.5.3 Any ladder that does not meet the criterion of 7.2.1.5.2 shall be removed from service.

7.2.2 Test Procedure for Roof Hooks. If the ladder is equipped with roof hooks, the roof hooks shall be tested in accordance with 7.2.2.1 through 7.2.2.6.

7.2.2.1 While the test method depicted in 7.2.2.2 through 7.2.2.5 represents a method of testing the roof hooks, variations of the specific method depicted herein shall be permitted provided the variations are consistent with the intent of this test method, are acceptable to the authority having jurisdiction, and provide equivalent results.

7.2.2.2 The ladder shall be positioned for testing and shall be tested as shown in Figure 7.2.2.2.

7.2.2.2.1 The ladder shall be hung solely by the roof hooks, with the hooks supported only by the points of the hooks, in a vertical position from a fixture that is capable of supporting the entire test load and weight of the ladder.

7.2.2.2.2 The ladder shall be secured in such a manner as to retain the ladder in the test position to prevent injury to test personnel if the hooks fail during the test.

7.2.2.3 A test load of 454 kg (1000 lb) in weight increments that are consistent with safety and ease of handling shall be placed over as many rungs as needed.

7.2.2.4 The test load shall be applied for a minimum of 1 minute.

7.2.2.5* After removal of the test load, there shall be no permanent deformation.

7.2.2.6 If there is any indication of permanent deformation, the ladder shall be removed from service.

7.2.3 Test Procedure for Extension Ladder Hardware. If the ladder is an extension ladder, the hardware shall be tested in accordance with 7.2.3.1 through 7.2.3.6.

7.2.3.1 While the test method depicted in 7.2.3.2 through 7.2.3.5 represents a method of testing the extension ladder hardware, variations of the specific method depicted herein shall be permitted provided the variations are consistent with the intent of this test method, are acceptable to the authority having jurisdiction, and provide equivalent results.

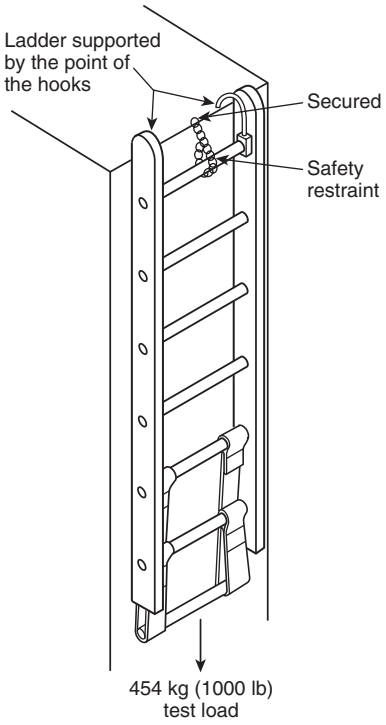

FIGURE 7.2.2.2 Roof Ladder Positioned for Roof Hook Test.

7.2.3.2 The ladder shall be positioned for testing and shall be tested as shown in Figure 7.2.3.2 with the ladder extended a minimum of one rung beyond the bedded position.

7.2.3.3 A test load of 454 kg (1000 lb) in weight increments that are consistent with safety and ease of handling shall be placed on the rungs of the fly section.

7.2.3.4 The test load shall be applied for a minimum of 1 minute.

7.2.3.5 Ladders shall sustain this test load with no failure of the hardware and no permanent deformation or other visible damage of the structure.

7.2.3.6 If there is any failure of the hardware, indication of permanent deformation, or other visible damage, the ladder shall be removed from service.

7.3 Service Testing Requirements for Pompier Ladders. All pompier ladders shall be service tested in accordance with 7.3.1 through 7.3.5.

7.3.1 While the test method depicted in 7.3.2 through 7.3.4 represents a method of testing the strength of pompier ladders, variations of the specific method depicted herein shall be permitted, provided the variations are consistent with the intent of this test method, are acceptable to the authority having jurisdiction, and provide equivalent results.

7.3.2 The ladder shall be positioned for testing as shown in Figure 7.3.2.

--`,,,,,,-`-`,,`,,`,`,,`---

Copyright National Fire Protection Association
Provided by IHS under license with NFPA
No reproduction or networking permitted without license from IHS
Not for Resale

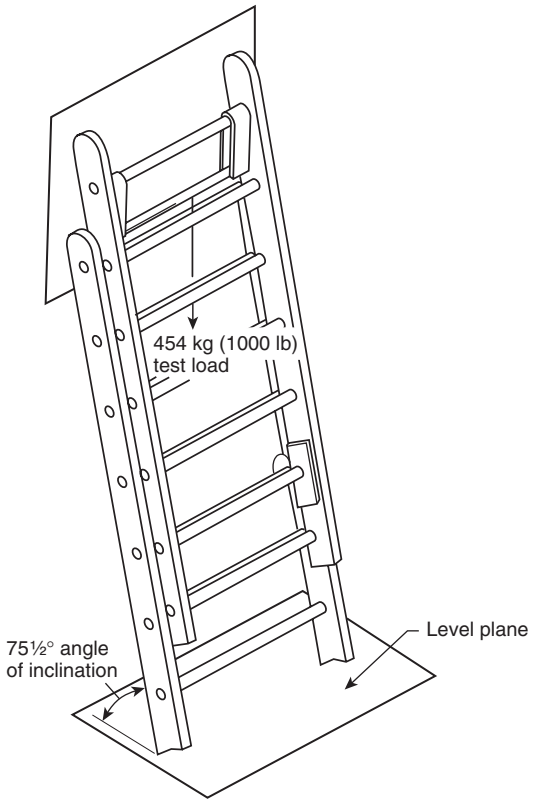

FIGURE 7.2.3.2 Extension Ladder Positioned for Hardware Test.

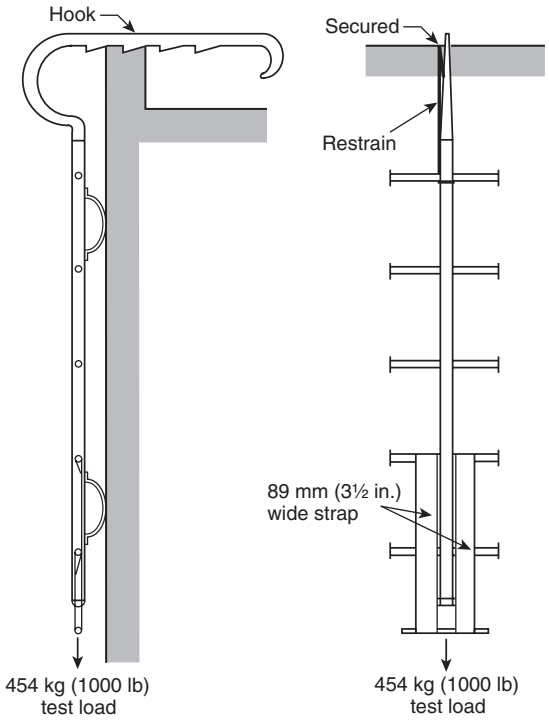

FIGURE 7.3.2 Pompier Ladder Positioned for Test.

7.3.2.1 The ladder shall be tested in the vertical hanging position, supported only by its hook, from a fixture that is capable of supporting the entire test load and weight of the ladder.

7.3.2.2 The ladder shall be secured in such a manner as to retain the ladder in the test position in order to prevent injury to test personnel if the hook fails during the test.

7.3.3 A test load of 454 kg (1000 lb) in weight increments that are consistent with safety and ease of handling shall be applied over multiple rungs.

7.3.4 The ladder shall withstand this test without ultimate failure.

7.3.5 If the pompier ladder does not meet the criterion of 7.3.4, it shall be removed from service.

7.4 Service Testing Requirements for Folding Ladders. All folding ladders shall be service tested in accordance with 7.4.1 through 7.4.4.

7.4.1 The ladder shall be unfolded, placed in a flat horizontal position, and supported 150 mm (6 in.) from each end of the ladder as shown in Figure 7.4.1.

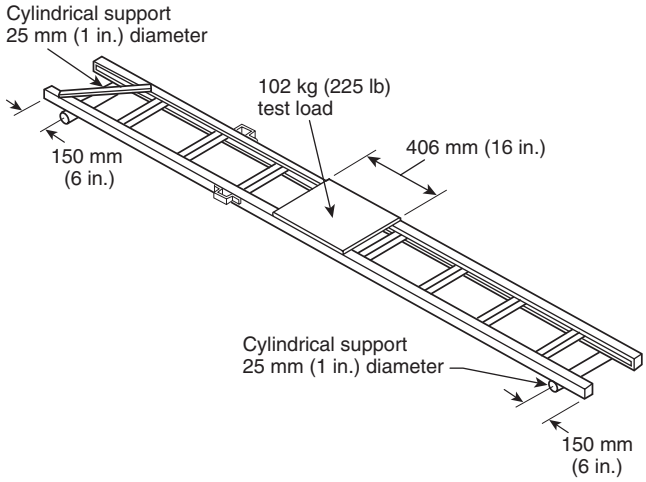

FIGURE 7.4.1 Folding Ladder Positioned for Horizontal Bending Test.

7.4.1.1 The supports shall be high enough that the ladder does not touch the floor or other surface during the test.

7.4.1.2 The ladder shall not be tied, strapped, or otherwise fastened to the supports.

7.4.2 All test loads shall be applied equally across the beams of the ladder and 203 mm (8 in.) each side of the lengthwise center inclusive.

7.4.2.1 If free weights are used, they shall be applied in increments consistent with safety and ease of handling to a flat test surface resting on the beams.

7.4.2.2 If a test fixture is used with a dynamometer, the test fixture shall be designed to apply the load over the required area in a manner that allows a load shift to a weak beam and does not restrain the load directionally.

Copyright National Fire Protection Association
Provided by IHS under license with NFPA
No reproduction or networking permitted without license from IHS
Not for Resale

7.4.2.3 All test loads shall include the weight of the test surface.

7.4.3 Metal and fiberglass folding ladders shall be tested in accordance with 7.4.5.

7.4.4 Wood folding ladders shall be tested in accordance with 7.4.6.

7.4.5 Metal and Fiberglass Folding Ladders.

7.4.5.1 The ladder shall be loaded with a preload of 73 kg (160 lb).

7.4.5.2 The preload shall be allowed to remain for at least 1 minute to "set" the ladder prior to completing the rest of the test.

7.4.5.3 After the preload is removed, the distance between the bottom edge of each beam and the surface upon which the ladder supports are placed shall be measured at the lengthwise center of the ladder.

7.4.5.4 The ladder shall be loaded with a test load of 102 kg (225 lb).

7.4.5.5 The test load shall remain in place for 5 minutes.

7.4.5.6 The test load shall then be removed, and the ladder allowed to rest for 5 minutes.

7.4.5.7 The distance between the bottom of each beam and the surface upon which the ladder supports are placed shall be measured at the same location the measurements in 7.4.5.3 were taken.

7.4.5.8 There shall be no more than 13 mm (0.5 in.) difference between measurements taken in 7.4.5.3 and 7.4.5.7.

7.4.5.9 There shall be no visible permanent change or failure of any hardware.

7.4.5.10 Any ladder that does not meet the test criteria of 7.4.5.8 and 7.4.5.9 shall be removed from service.

7.4.6 Wood Folding Ladders.

7.4.6.1 The ladder shall be loaded with a test load of 102 kg (225 lb).

7.4.6.2 The test load shall remain in place for 5 minutes and then be removed.

7.4.6.3 The ladder and its components shall not show any permanent damage.

7.4.6.4 If the ladder does not meet the test criterion of 7.4.6.3, it shall be removed from service.

Annex A Explanatory Material

Annex A is not a part of the requirements of this NFPA document but is included for informational purposes only. This annex contains explanatory material, numbered to correspond with the applicable text paragraphs.

A.1.1 Ground ladders used in the fire service must be constructed to rigid standards to ensure that the ladders are of the highest quality. These ladders often provide the only means of fire fighter entry into a building or portions of a building and could be the only means of egress for victims trapped by a fire within a building. Fire department ground ladders serve as a path for fire fighters to transport people, equipment, and extinguishing agents from one level to a higher or lower level. Because the lives of fire fighters and fire victims often rely on the performance, without failure, of these valuable pieces of fire department equipment, these standards of performance are critical.

A.1.2 It is recognized that specific details on ladder construction materials have been established by other organizations such as the American National Standards Institute, U.S. Department of Agriculture Forest Products Laboratory, and the Aluminum Association. This standard should never be interpreted as establishing lower materials strength criteria than what might be set forth in other recognized standards such as these.

A.1.3 The service testing procedures contained within this standard are based on the design criteria that are specified in the editions of NFPA 1931 since 1984. The 1984 edition of NFPA 1931 included significant increases in the required strength of ladders, based on information and technology that became available after the issuance of the 1979 edition of NFPA 1931. The new information was related to dynamic loads that resulted from the actual use of ground ladders.

Ladders that were constructed to comply with earlier editions of NFPA 1931 were designed for lesser loads and less demanding test requirements that were the state of the art at that time. The new criteria are believed to be more accurate and provide a higher level of safety.

A.3.2.1 Approved. The National Fire Protection Association does not approve, inspect, or certify any installations, procedures, equipment, or materials; nor does it approve or evaluate testing laboratories. In determining the acceptability of installations, procedures, equipment, or materials, the authority having jurisdiction may base acceptance on compliance with NFPA or other appropriate standards. In the absence of such standards, said authority may require evidence of proper installation, procedure, or use. The authority having jurisdiction may also refer to the listings or labeling practices of an organization that is concerned with product evaluations and is thus in a position to determine compliance with appropriate standards for the current production of listed items.

A.3.2.2 Authority Having Jurisdiction (AHJ). The phrase "authority having jurisdiction," or its acronym AHJ, is used in NFPA documents in a broad manner, since jurisdictions and approval agencies vary, as do their responsibilities. Where public safety is primary, the authority having jurisdiction may be a federal, state, local, or other regional department or individual such as a fire chief; fire marshal; chief of a fire prevention bureau, labor department, or health department; building official; electrical inspector; or others having statutory authority. For insurance purposes, an insurance inspection department, rating bureau, or other insurance company representative may be the authority having jurisdiction. In many circumstances, the property owner or his or her designated agent assumes the role of the authority having jurisdiction; at government installations, the commanding officer or departmental official may be the authority having jurisdiction.

A.3.3.5 Butt. A butt can be the lower end of beams or can be added devices.

A.3.3.6 Butt Spurs (Feet). Butt spurs can be the lower end of beams or can be added devices.

A.3.3.16 Free Weight. Free weights typically include sandbags, concrete blocks, water tanks, or lead weights.

Copyright National Fire Protection Association
Provided by IHS under license with NFPA
No reproduction or networking permitted without license from IHS
Not for Resale

A.4.2.2 Continued exposure to a heating source or direct sunlight will cause wood ladders to deteriorate.

A.4.2.3 Continued exposure to direct sunlight will cause ultraviolet erosion of the surface of fiberglass ladders, causing the glass fibers to become exposed.

A.5.1.1 Ladders used by fire department personnel solely at fire stations for maintenance and reaching high places should be covered by the applicable ANSI and OSHA standards for the same.

A.5.1.2 The design criteria for ladders are based on the weight of a fire fighter with protective clothing, SCBA, and equipment being 113 kg (250 lb). Ladders rated for 136 kg (300 lb) are designed for one person. Ladders rated for 340 kg (750 lb) are designed for a maximum of three persons on the ladder at any time. On a three-person ladder, not more than two persons should be grouped together, such as a rescuer and a victim.

Ladders are designed so that the stress on the ladder structure and component parts or materials does not exceed 25 percent of the yield strength of the structure, component parts, or materials when the ladder is statically loaded in accordance with Table 5.1.2.1.

A.5.1.7.2 Using a ladder at an angle less than 70 degrees drastically reduces the ladder's load-carrying capacity. Using a ladder at an angle greater than 76 degrees dramatically reduces the ladder's stability.

A.5.1.8 Mechanical means of securing a ground ladder can include trying a lower rung or the beams to a bar driven into the ground or to a fixed object directly under the ladder near the ground.

A.5.1.8.1 Using a ladder at an angle less than 70 degrees drastically increases the possibility of ladder slippage.

A.5.2.3 Tying off or securing the halyard provides a secondary method of securing the fly section in the event of pawl disengagement. When a continuous halyard prevents tying off, a camlock, as is used for securing a sailboat halyard, might be used.

A.5.2.6 The use of one staypole introduces an artificial twist in the ladder that is dangerous to the climber and can cause permanent damage to the ladder.

A.5.4 Wood materials normally do not conduct electricity. However, under conditions of high voltage or moisture, contamination on the wood surface can conduct enough electricity to cause injury or death. Therefore, caution should be used around electrical wiring.

A.5.5 Fiberglass materials normally do not conduct electricity. However, under conditions of high voltage or moisture, contamination on the fiberglass surface can conduct enough electricity to cause injury or death. Therefore, caution should be used around electrical wiring.

A.6.1.3(15) NFPA 1931 has required the following labels on new ground ladders since 1984:

(1) Electrical hazard warning label
(2) Ladder positioning label
(3) Staypole positioning instruction label

A.6.1.4.1 It is suggested that a tag with a distinctive color be used to mark ladders as out of service and that the tag be fastened to the ladder in a manner that it cannot be removed accidentally.

A.6.2.5 When reinstalling ladder pawl assemblies, caution must be used to prevent overtightening of pawl assembly fasteners, as this causes binding of pawl assembly parts. Figure A.6.2.5 illustrates the parts of a pawl housing. Replacement springs and parts are available from the ladder manufacturer.

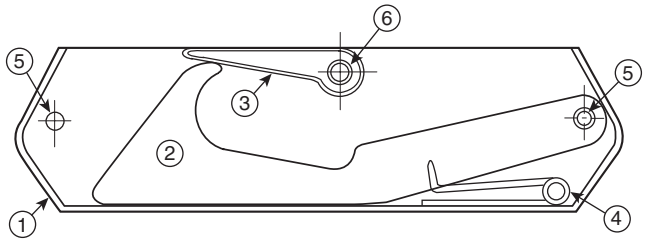

1. Pawl housing
2. Pawl hook
3. Finger (note position)
4. Spring
5. Mounting bolt holes
6. Shoulder bolt hole

FIGURE A.6.2.5 Pawl Housing Showing Parts.

A.6.2.7 Replacement halyards should not be less than 9.5 mm (⅜ in.) in diameter with a minimum breaking strength of 374 kg (825 lb). They should be of sufficient length for the purpose intended and should not be spliced. Wire rope should have a 5 to 1 safety factor while supporting two times the dead load weight of the fly section(s) that the wire rope is intended to raise.

A.7.1.1 It is the intent of the committee that all the tests defined in this standard be performed. Other tests, when approved by the manufacturer, can be performed, but not in lieu of the requirements of this standard.

A.7.1.2 The authority having jurisdiction contracting with a testing organization for testing fire department ground ladders should evaluate the qualifications and experience of the testing organization. If there are questions about the applicability of any test, contact the ground ladder manufacturer.

A.7.1.3 Wood ladders are particularly vulnerable to damage, and weakening might not be readily visible and might cause failure when such ladders are used in emergency situations.

Personnel performing the tests should at a minimum use safety glasses and safety shoes.

A.7.1.6(6) Discoloration beyond dirt or soot that cannot be easily washed off is often an indication that the ladder has been heated.

A.7.1.8.1 It is suggested that a tag with a distinctive color be used to mark ladders as out of service and that the tag be fastened to the ladder in a manner that it cannot be accidentally removed.

A.7.2.1 The horizontal bending test uses the horizontal position to make the testing procedure easier and safer. This position also provides a safety factor when compared to the same load at an angle of 75½ degrees. This safety factor is necessary to account for the dynamic forces that might be created by moving loads on the ladder as it is used *(see also A.1.3 and A.5.1.2)*. The horizontal bending test is not designed to test a ladder for use as a bridge but rather to provide a test to ensure a safe ladder when it is used in the elevated position.

Copyright National Fire Protection Association
Provided by IHS under license with NFPA
No reproduction or networking permitted without license from IHS
Not for Resale

A brand new ladder has manufacturing tolerances that might give a false reading the first time the test is run. These false readings are less likely to occur on a ladder that has been in service and has been climbed prior to being tested. Therefore, a new ladder should either be set up and climbed several times prior to being tested, or the test should be run one time with the results not being counted and then repeated as the official test.

A.7.2.2.5 Many roof ladders manufactured prior to 1984 were equipped with mild steel roof hooks 16 mm (⅝ in.) in diameter that do not meet the requirements of the roof hook test. Alloy steel (chrome-moly) roof hooks 16 mm (⅝ in.) in diameter or mild steel roof hooks 19 mm (¾ in.) in diameter normally do meet the roof hook test requirement.

Annex B Informational References

B.1 Referenced Publications. The following documents or portions thereof are referenced within this standard for informational purposes only and are thus not part of the requirements of this document unless also listed in Chapter 2.

B.1.1 NFPA Publication. National Fire Protection Association, 1 Batterymarch Park, Quincy, MA 02169-7471.

NFPA 1931, *Standard for Manufacturer's Design of Fire Department Ground Ladders*, 2004 edition.

B.1.2 Other Publications. (Reserved)

B.2 Informational References. (Reserved)

B.3 References for Extracts. The following documents are listed here to provide reference information, including title and edition, for extracts given throughout the nonmandatory sections of this standard as indicated by a reference in brackets [ ] following a section or paragraph. These documents are not a part of the requirements of this document unless also listed in Chapter 2 for other reasons.

NFPA 1931, *Standard for Manufacturer's Design of Fire Department Ground Ladders*, 2004 edition.

--`,,,,,,`-`-`,,`,,`,`,,`---

Copyright National Fire Protection Association
Provided by IHS under license with NFPA
No reproduction or networking permitted without license from IHS
Not for Resale

Index

© 2004 National Fire Protection Association. All Rights Reserved.

The copyright in this index is separate and distinct from the copyright in the document that it indexes. The licensing provisions set forth for the document are not applicable to this index. This index may not be reproduced in whole or in part by any means without the express written permission of NFPA.

-A-

Angle of inclination 5.1.2.2, 5.1.7, 5.1.8.1, 5.1.8.2, A.5.1.7.2, A.5.1.8.1
  Definition 3.3.1
Application of standard 1.3, A.1.3
Approved (definition) 3.2.1, A.3.2.1
Authority having jurisdiction (definition) 3.2.2, A.3.2.2

-B-

Base (bed) section
  Definition 3.3.2
  Securing base 5.1.8, A.5.1.8
Beam (side rail) ..... 5.1.12, 6.1.3(5), 6.2.10.2.2
  Definition 3.3.3
Bedded position ..... 6.1.3(14)
  Definition 3.3.4
Bending test, horizontal 7.2.1, A.7.2.1
Butt 5.1.5
  Definition 3.3.5, A.3.3.5
Butt spurs (feet)
  Definition 3.3.6, A.3.3.6
  Inspection ..... 6.1.3(6)

-C-

Collapsible ladders .....*see* Folding ladders
Combination ladders
  Definition 3.3.8
  Service tests 7.2.1.2
Corrosion ..... 6.1.3(10)

-D-

Damage, visible (definition) 3.3.35
Damaged ladders, removal from service of 6.1.4, 6.1.6, 6.2.2, 7.1.5, 7.1.8, A.6.1.4.1, A.7.1.8.1
Definitions Chap.3
Deformation, permanent (definition) 3.3.23
Designated length (definition) 3.3.9
Dogs .....*see* Pawls
Duty rating 5.1.2.1
  Definition 3.3.11

-E-

Electrical hazards ..... 5.3 to 5.5, A.5.4, A.5.5
Extension ladders
  Definition 3.3.12
  Inspection ..... 6.1.3(11), 6.1.3(13), 6.1.3(14)
  Maintenance ..... 6.2.5 to 6.2.7, A.6.2.5, A.6.2.7
  Service tests 7.2.1.2, 7.2.3
  Use requirements 5.2, A.5.2.3, A.5.2.6

-F-

Failure .....*see also* Damaged ladders, removal from service of
  Service tests .....*see* Service tests
  Ultimate 7.2.1.5.2
    Definition 3.3.34
Fiberglass ground ladders
  Inspections ..... 6.1.3(1), 6.1.3(12)
  Service tests 7.2.1.4, 7.4.5
  Storage 4.2.3, A.4.2.3
  Use 5.5, A.5.5
Fire department ground ladders …*see also* Fiberglass ground ladders; Metal ground ladders; Wood ground ladders
  Definition 3.3.13
  Inspection and maintenance ..... Chap. 6
  Mounting 4.1
  Securing base/top 5.1.8, 5.1.10, A.5.1.8
  In service (definition) 3.3.19
  Service tests .....*see* Service tests
  Storage 4.2, A.4.2.2, A.4.2.3
  Surface finish 6.2.9
  Use of ..... Chap. 5
Fly sections 5.2.1
  Definition 3.3.14
Folding ladders 6.2.10.2.3
  Definition 3.3.15
  Service tests 7.1.6.3, 7.4
Free weights 7.2.1.3.1
  Definition 3.3.16, A.3.3.16

-G-

Gouges and dents 6.1.5
Ground ladders .....*see* Fire department ground ladders

-H-

Halyards
  Definition 3.3.17
  Inspection ..... 6.1.3(7)
  Maintenance 6.2.7, A.6.2.7
  Use 5.2.3, A.5.2.3
Hardware test 7.2.3
Heat sensor labels ..... 6.1.3(1), 6.2.10, A.6.2.10.1
  Definition 3.3.18
  Use of ..... 7.1.6(7)
Horizontal bending test 7.2.1, A.7.2.1

-I-

In service (definition) 3.3.19
Inspection and maintenance ..... 5.1.3, Chap. 6; *see also* Visual inspection

-L-

Labels ..... 6.1.3(15), A.6.1.3(15); *see also* Heat sensor labels
Ladders (definition) ..... 3.3.20; *see also* Fire department ground ladders
Length
  Maximum extended (definition) 3.3.21
  Working (definition) 3.3.37
Loading, of fire department ground ladders 5.1.2, A.5.1.2

-M-

Maintenance 6.2, A.6.2
Maximum extended length (definition) 3.3.21
Metal ground ladders
  Inspections ..... 6.1.3(1)
  Service tests 7.2.1.4, 7.4.5
  Use 5.3
Mounting, of fire department ground ladders 4.1

--`,,,,,,-`-`,,`,,`,`,,`---

Copyright National Fire Protection Association
Provided by IHS under license with NFPA
No reproduction or networking permitted without license from IHS

Not for Resale

-P-

Pawls 5.1.9, 6.2.5, 7.2.1.2.1, A.6.2.5
Definition 3.3.22
Inspection ..... 6.1.3(13)
Permanent deformation (definition) 3.3.23
Pompier ladders
Definition 3.3.24
Service tests 7.1.6.2, 7.3
Purpose of standard 1.2, A.1.2

-R-

References ..... Annex B
Roof hooks ..... 6.1.3(8), 6.2.8, 7.2.2, A.7.2.2.5
Roof ladders ..... 6.1.3(8), 6.2.8, 7.2.2, A.7.2.2.5
Definition 3.3.25
Rungs 6.2.10.2.2
Definition 3.3.26
Inspection ..... 6.1.3(2), 6.1.3(5), 6.1.3(9)

-S-

Scaling ladders ..... *see* Pompier ladders
Scope of standard 1.1, A.1.1
Service tests ..... 5.1.3.2, 6.1.4.2, 6.1.6, Chap. 7
Definition 3.3.28
Extension ladder hardware 7.2.3
Failure of test 7.1.5, 7.1.8, 7.2.1.4.7, 7.2.1.5.2, A.7.1.8.1
Folding ladders 7.4
Horizontal bending tests 7.2.1, A.7.2.1
Pompier ladders 7.3
Records of tests 7.1.7
Shall (definition) 3.2.3
Should (definition) 3.2.4
Side rails ..... *see* Beam (side rail)
Single ladders (definition) 3.3.30
Standard (definition) 3.2.4
Staypoles (tormentors) 5.2.5, 5.2.6, A.5.2.6
Definition 3.3.31
Storage, of fire department ground ladders 4.2, A.4.2.2, A.4.2.3

-T-

Tested (definition) 3.3.32
Tests ..... *see* Service tests
Tormentors or tormentor poles ..... *see* Staypoles (tormentors)

-U-

Ultimate failure 7.2.1.5.2
Definition 3.3.34
Use of ground ladders ..... Chap. 5

-V-

Visible damage (definition) 3.3.35
Visual inspection ..... 6.1.2 to 6.1.4, 6.1.5.1
Definition 3.3.36

-W-

Wood ground ladders
Inspections ..... 6.1.3(1), 6.1.3(3), 6.1.3(12)
Maintenance 6.2.3
Service tests 7.2.1.5, 7.4.6
Storage 4.2.2, A.4.2.2
Use 5.4, A.5.4
Working length (definition) 3.3.37

Copyright National Fire Protection Association
Provided by IHS under license with NFPA
No reproduction or networking permitted without license from IHS
Not for Resale

Sequence of Events Leading to Publication of an NFPA Committee Document

Call goes out for proposals to amend existing document or for recommendations on new document.

▼

Committee meets to act on proposals, to develop its own proposals, and to prepare its report.

▼

Committee votes on proposals by letter ballot. If two-thirds approve, report goes forward. Lacking two-thirds approval, report returns to committee.

▼

Report — *Report on Proposals* (ROP) — is published for public review and comment.

▼

Committee meets to act on each public comment received.

▼

Committee votes on comments by letter ballot. If two-thirds approve, supplementary report goes forward. Lacking two-thirds approval, supplementary report returns to committee.

▼

Supplementary report — *Report on Comments* (ROC) — is published for public review.

▼

NFPA membership meets (Annual or Fall Meeting) and acts on committee report (ROP or ROC).

▼

Committee votes on any amendments to report approved at NFPA Annual or Fall Meeting.

▼

Appeals to Standards Council on Association action must be filed within 20 days of the NFPA Annual or Fall Meeting.

▼

Standards Council decides, based on all evidence, whether or not to issue standard or to take other action, including upholding any appeals.

Committee Membership Classifications

The following classifications apply to Technical Committee members and represent their principal interest in the activity of the committee.

M *Manufacturer:* A representative of a maker or marketer of a product, assembly, or system, or portion thereof, that is affected by the standard.

U *User:* A representative of an entity that is subject to the provisions of the standard or that voluntarily uses the standard.

I/M *Installer/Maintainer:* A representative of an entity that is in the business of installing or maintaining a product, assembly, or system affected by the standard.

L *Labor:* A labor representative or employee concerned with safety in the workplace.

R/T *Applied Research/Testing Laboratory:* A representative of an independent testing laboratory or independent applied research organization that promulgates and/or enforces standards.

E *Enforcing Authority:* A representative of an agency or an organization that promulgates and/or enforces standards.

I *Insurance:* A representative of an insurance company, broker, agent, bureau, or inspection agency.

C *Consumer:* A person who is, or represents, the ultimate purchaser of a product, system, or service affected by the standard, but who is not included in the *User* classification.

SE *Special Expert:* A person not representing any of the previous classifications, but who has a special expertise in the scope of the standard or portion thereof.

NOTES:

1. "Standard" connotes code, standard, recommended practice, or guide.
2. A representative includes an employee.
3. While these classifications will be used by the Standards Council to achieve a balance for Technical Committees, the Standards Council may determine that new classifications of members or unique interests need representation in order to foster the best possible committee deliberations on any project. In this connection, the Standards Council may make such appointments as it seems appropriate in the public interest, such as the classification of "Utilities" in the National Electrical Code Committee.
4. Representatives of subsidiaries of any group are generally considered to have the same classification as the parent organization.

Copyright National Fire Protection Association
Provided by IHS under license with NFPA
No reproduction or networking permitted without license from IHS
Not for Resale

NFPA Technical Committee Document Proposal Form

Note: All proposals must be received by 5:00 p.m. EST/EDST on the published proposal closing date.

For further information on the standards-making process, please contact Codes and Standards Administration at 617-984-7249. For technical assistance, please call NFPA at 617-770-3000.

FOR OFFICE USE ONLY
Log #: _____
Date Rec'd: _____

Please indicate in which format you wish to receive your ROP/ROC: ☐ **CD ROM** ☐ **paper** ☐ **download**
(Note: In choosing the download option you intend to view the ROP/ROC from our Website. No copy will be sent to you.)

Date 12/18/02 **Name** John B. Smith **Telephone** 617-555-1212
Company _____
Address 9 Seattle St. **City** Seattle **State** WA **Zip** 02255
Please indicate organization represented (if any) Fire Marshals Assn. of North America

1. **a) NFPA Document Title** National Fire Alarm Code
   b) NFPA No. & Edition NFPA 72, 2002 ed. **c) Section/Paragraph** 4.4.7.1.1

2. **Proposal Recommends:** *(check one)* ☐ **new text** ☐ **revised text** ☒ **deleted text**

3. **Proposal.** *(Include proposed new or revised wording, or identification of wording to be deleted.)* Note: Proposed text should be in legislative format, that is, use underscore to denote wording to be inserted (inserted wording) and strike-through to denote wording to be deleted (~~deleted wording~~). Delete exception.

4. **Statement of Problem and Substantiation for Proposal.** Note: State the problem that will be resolved by your recommendation. Give the specific reason for your proposal including copies of tests, research papers, fire experience, etc. If more than 200 words, it may be abstracted for publication. A properly installed and maintained system should be free of ground faults. The occurrence of one or more ground faults should be required to cause a "trouble" signal because it indicates a condition that could contribute to future malfunction of the system. Ground fault protection has been widely available on these systems for years and its cost is negligible. Requiring it on all systems will promote better installations, maintenance and reliability.

5. ☒ **This Proposal is Original Material.** Note: Original material is considered to be the submitter's own idea based on or as a result of his/her own experience, thought, or research and, to the best of his/her knowledge, is not copied from another source.

   ☐ **This Proposal is Not Original Material; Its Source** ***(if known)*** **is as Follows:** _____

Sample

I hereby grant the NFPA all and full rights in copyright to this proposal, and I understand that I acquire no rights in any publication of NFPA in which this proposal in this or another similar or analogous form is used.

Signature ***(Required)*** John B. Smith

PLEASE USE SEPARATE FORM FOR EACH PROPOSAL • NFPA FAX (617) 770-3500

Mail to: Secretary, Standards Council • NFPA • 1 Batterymarch Park • PO Box 9101 • Quincy, MA 02269-9101

--`,,,,,,-`-`,,`,,`,`,,`---

Copyright National Fire Protection Association
Provided by IHS under license with NFPA
No reproduction or networking permitted without license from IHS

Not for Resale

NFPA Technical Committee Document Proposal Form

Note: All proposals must be received by 5:00 p.m. EST/EDST on the published proposal closing date.

For further information on the standards-making process, please contact Codes and Standards Administration at 617-984-7249. For technical assistance, please call NFPA at 617-770-3000.

FOR OFFICE USE ONLY
Log #: _____
Date Rec'd: _____

Please indicate in which format you wish to receive your ROP/ROC: ☐ **CD ROM** ☐ **paper** ☐ **download**
(Note: In choosing the download option you intend to view the ROP/ROC from our Website. No copy will be sent to you.)

Date _____ **Name** _____ **Telephone** _____
Company _____
Address _____ **City** _____ **State** _____ **Zip** _____
Please indicate organization represented (if any) _____

1. **a) NFPA Document Title** _____
   b) NFPA No. & Edition _____ **c) Section/Paragraph** _____

2. **Proposal Recommends:** *(check one)* ☐ **new text** ☐ **revised text** ☐ **deleted text**

3. **Proposal.** *(Include proposed new or revised wording, or identification of wording to be deleted.)* Note: Proposed text should be in legislative format, that is, use underscore to denote wording to be inserted (inserted wording) and strike-through to denote wording to be deleted (~~deleted wording~~). _____

4. **Statement of Problem and Substantiation for Proposal.** Note: State the problem that will be resolved by your recommendation. Give the specific reason for your proposal including copies of tests, research papers, fire experience, etc. If more than 200 words, it may be abstracted for publication. _____

5. ☐ **This Proposal is Original Material.** Note: Original material is considered to be the submitter's own idea based on or as a result of his/her own experience, thought, or research and, to the best of his/her knowledge, is not copied from another source.

   ☐ **This Proposal is Not Original Material; Its Source *(if known)* is as Follows:** _____

I hereby grant the NFPA all and full rights in copyright to this proposal, and I understand that I acquire no rights in any publication of NFPA in which this proposal in this or another similar or analogous form is used.

Signature *(Required)* _____

PLEASE USE SEPARATE FORM FOR EACH PROPOSAL • NFPA FAX (617) 770-3500

Mail to: Secretary, Standards Council • NFPA • 1 Batterymarch Park • PO Box 9101 • Quincy, MA 02269-9101

Copyright National Fire Protection Association
Provided by IHS under license with NFPA
No reproduction or networking permitted without license from IHS
Not for Resale