NFPA 1931

Standard for Manufacturer's Design of Fire Department Ground Ladders

2004 Edition

NFPA, 1 Batterymarch Park, Quincy, MA 02169-7471
An International Codes and Standards Organization

--`,,,,,,`-`-`,,`,,`,`,,`---

Copyright National Fire Protection Association
Provided by IHS under license with NFPA
No reproduction or networking permitted without license from IHS

Not for Resale

IMPORTANT NOTICES AND DISCLAIMERS CONCERNING NFPA DOCUMENTS

NOTICE AND DISCLAIMER OF LIABILITY CONCERNING THE USE OF NFPA DOCUMENTS

NFPA codes, standards, recommended practices, and guides, of which the document contained herein is one, are developed through a consensus standards development process approved by the American National Standards Institute. This process brings together volunteers representing varied viewpoints and interests to achieve consensus on fire and other safety issues. While the NFPA administers the process and establishes rules to promote fairness in the development of consensus, it does not independently test, evaluate, or verify the accuracy of any information or the soundness of any judgments contained in its codes and standards.

The NFPA disclaims liability for any personal injury, property or other damages of any nature whatsoever, whether special, indirect, consequential or compensatory, directly or indirectly resulting from the publication, use of, or reliance on this document. The NFPA also makes no guaranty or warranty as to the accuracy or completeness of any information published herein.

In issuing and making this document available, the NFPA is not undertaking to render professional or other services for or on behalf of any person or entity. Nor is the NFPA undertaking to perform any duty owed by any person or entity to someone else. Anyone using this document should rely on his or her own independent judgment or, as appropriate, seek the advice of a competent professional in determining the exercise of reasonable care in any given circumstances.

The NFPA has no power, nor does it undertake, to police or enforce compliance with the contents of this document. Nor does the NFPA list, certify, test or inspect products, designs, or installations for compliance with this document. Any certification or other statement of compliance with the requirements of this document shall not be attributable to the NFPA and is solely the responsibility of the certifier or maker of the statement.

Copyright National Fire Protection Association
Provided by IHS under license with NFPA
No reproduction or networking permitted without license from IHS
Not for Resale

ADDITIONAL NOTICES AND DISCLAIMERS

Updating of NFPA Documents

Users of NFPA codes, standards, recommended practices, and guides should be aware that these documents may be superseded at any time by the issuance of new editions or may be amended from time to time through the issuance of Tentative Interim Amendments. An official NFPA document at any point in time consists of the current edition of the document together with any Tentative Interim Amendments and any Errata then in effect. In order to determine whether a given document is the current edition and whether it has been amended through the issuance of Tentative Interim Amendments or corrected through the issuance of Errata, consult appropriate NFPA publications such as the National Fire Codes® Subscription Service, visit the NFPA website at www.nfpa.org, or contact the NFPA at the address listed below.

Interpretations of NFPA Documents

A statement, written or oral, that is not processed in accordance with Section 6 of the Regulations Governing Committee Projects shall not be considered the official position of NFPA or any of its Committees and shall not be considered to be, nor be relied upon as, a Formal Interpretation.

Patents

The NFPA does not take any position with respect to the validity of any patent rights asserted in connection with any items which are mentioned in or are the subject of NFPA codes, standards, recommended practices, and guides, and the NFPA disclaims liability for the infringement of any patent resulting from the use of or reliance on these documents. Users of these documents are expressly advised that determination of the validity of any such patent rights, and the risk of infringement of such rights, is entirely their own responsibility.

NFPA adheres to applicable policies of the American National Standards Institute with respect to patents. For further information contact the NFPA at the address listed below.

Law and Regulations

Users of these documents should consult applicable federal, state, and local laws and regulations. NFPA does not, by the publication of its codes, standards, recommended practices, and guides, intend to urge action that is not in compliance with applicable laws, and these documents may not be construed as doing so.

Copyrights

This document is copyrighted by the NFPA. It is made available for a wide variety of both public and private uses. These include both use, by reference, in laws and regulations, and use in private self-regulation, standardization, and the promotion of safe practices and methods. By making this document available for use and adoption by public authorities and private users, the NFPA does not waive any rights in copyright to this document.

Use of NFPA documents for regulatory purposes should be accomplished through adoption by reference. The term "adoption by reference" means the citing of title, edition, and publishing information only. Any deletions, additions, and changes desired by the adopting authority should be noted separately in the adopting instrument. In order to assist NFPA in following the uses made of its documents, adopting authorities are requested to notify the NFPA (Attention: Secretary, Standards Council) in writing of such use. For technical assistance and questions concerning adoption of NFPA documents, contact NFPA at the address below.

For Further Information

All questions or other communications relating to NFPA codes, standards, recommended practices, and guides and all requests for information on NFPA procedures governing its codes and standards development process, including information on the procedures for requesting Formal Interpretations, for proposing Tentative Interim Amendments, and for proposing revisions to NFPA documents during regular revision cycles, should be sent to NFPA headquarters, addressed to the attention of the Secretary, Standards Council, NFPA, 1 Batterymarch Park, P.O. Box 9101, Quincy, MA 02269-9101.

For more information about NFPA, visit the NFPA website at www.nfpa.org.

Copyright National Fire Protection Association
Provided by IHS under license with NFPA
No reproduction or networking permitted without license from IHS
Not for Resale

Copyright © 2004, National Fire Protection Association, All Rights Reserved

NFPA 1931

Standard for

Manufacturer's Design of Fire Department Ground Ladders

2004 Edition

This edition of NFPA 1931, *Standard for Manufacturer's Design of Fire Department Ground Ladders*, was prepared by the Technical Committee on Fire Department Ground Ladders and acted on by NFPA at its May Association Technical Meeting held May 23–26, 2004, in Salt Lake City, UT. It was issued by the Standards Council on July 16, 2004, with an effective date of August 5, 2004, and supersedes all previous editions.

This edition of NFPA 1931 was approved as an American National Standard on August 5, 2004.

Origin and Development of NFPA 1931

In 1959, new material was added to NFPA 193, *Fire Department Ladders — Ground and Aerial*, covering requirements for the construction of ground ladders while continuing to cover their use, maintenance, and testing. These requirements recognized aluminum as a product for the construction of fire department ground ladders.

In May 1972, a complete revision of the 1959 edition of NFPA 193 was adopted.

In 1975, NFPA 193 was separated into two documents, NFPA 1931, *Standard on Fire Department Ground Ladders*, and NFPA 1904, *Recommended Practice for the Maintenance, Care, Testing and Use of Fire Department Aerial Ladders and Elevating Platforms*.

The 1979 edition incorporated extensive revisions, including editorial and style changes.

In 1984, the text of NFPA 1931 was again divided into two documents. NFPA 1931 contained the requirements for manufacturers on design and design verification testing for new ground ladders. A companion document, NFPA 1932, *Standard on Use, Maintenance, and Service Testing of Fire Department Ground Ladders*, covered requirements for the ground ladder user. The 1984 revision increased the requirements for the strength of the ladder as well as dimensional requirements.

The 1989 edition included additional requirements for labels, modified requirements for rung spacing, added requirements for securing halyards, and required staypoles to be stowable against the base section if they could not be properly deployed.

The 1994 edition added a table of ladder duty ratings, added additional requirements for wood ground ladders, and modified some of the labeling requirements. The 1999 edition basically editorially revised and updated the standard to keep it current.

This 2004 edition has changed the title of the document to *Standard for Manufacturer's Design of Fire Department Ground Ladders* and revised the scope and purpose statements to emphasize that the document is for the ground ladder manufacturer, not the end user. The entire document has been revised into the current NFPA *Manual of Style* and updated to clarify vague or ambiguous language in the standard.

Copyright National Fire Protection Association
Provided by IHS under license with NFPA
No reproduction or networking permitted without license from IHS
Not for Resale

Technical Committee on Fire Department Ground Ladders

Brian D. Berchtold, *Chair*
Galloway Township Volunteer Fire Dept., NJ [U]

David R. Bouchard, Fire Consulting Associates Inc., RI [SE]
Boyd F. Cole, SunnyCor Inc./SmartCoat Inc., CA [M]
Samuel C. Cramer, Aluminum Ladder Company, SC [M]
Sheperd Neil Harper, City of Vacaville Fire Department, CA [U]
Tom Hillenbrand, Underwriters Laboratories Inc., IL [RT]
Kathy McGrade, FailSafe Testing, CA [RT]
A. K. Rosenhan, Mississippi State University, MS [SE]
Philip Schwab, Duo-Safety Ladder Corporation, WI [M]

Alternate

James Johannessen, Underwriters Laboratories Inc., PA [RT]
(Alt. to T. Hillenbrand)

Carl E. Peterson, NFPA Staff Liaison

This list represents the membership at the time the Committee was balloted on the final text of this edition. Since that time, changes in the membership may have occurred. A key to classifications is found at the back of the document.

NOTE: Membership on a committee shall not in and of itself constitute an endorsement of the Association or any document developed by the committee on which the member serves.

Committee Scope: This Committee shall have primary responsibility for documents on the design, inspection, testing, and use of ground ladders for the fire service.

Copyright National Fire Protection Association
Provided by IHS under license with NFPA
No reproduction or networking permitted without license from IHS
Not for Resale

Contents

Chapter 1 Administration **1931–** 4
1.1 Scope **1931–** 4
1.2 Purpose **1931–** 4
1.3 Application **1931–** 4

Chapter 2 Referenced Publications **1931–** 4
2.1 General **1931–** 4
2.2 NFPA Publications **1931–** 4
2.3 Other Publications **1931–** 4

Chapter 3 Definitions **1931–** 4
3.1 General **1931–** 4
3.2 NFPA Official Definitions **1931–** 4
3.3 General Definitions **1931–** 4

Chapter 4 Ladder Design **1931–** 5
4.1 Requirements for All Ground Ladders **1931–** 5
4.2 Additional Requirements for Single Ladders Only **1931–** 7
4.3 Additional Requirements for Roof Ladders Only **1931–** 7
4.4 Additional Requirements for Extension Ladders Only **1931–** 7
4.5 Additional Requirements for Combination Ladders Only **1931–** 8
4.6 Additional Requirements for Folding Ladders Only **1931–** 8
4.7 Additional Requirements for Pompier Ladders **1931–** 8
4.8 Manufacturer Certification **1931–** 8

Chapter 5 Design Verification Tests **1931–** 8
5.1 Requirements for All Design Verification Tests **1931–** 8
5.2 Single, Extension, and Combination Ladder Design Verification Tests **1931–** 9
5.3 Additional Design Verification Tests for Roof Ladders Only **1931–**13
5.4 Additional Design Verification Tests for Extension and Combination Ladders Only **1931–**13
5.5 Additional Design Verification Tests for Extension Ladders Only **1931–**15
5.6 Additional Design Verification Tests for Combination Ladders Only **1931–**16
5.7 Design Verification Tests for Folding Ladders Only **1931–**16
5.8 Design Verification Tests for Pompier Ladders Only **1931–**16

Chapter 6 Label Tests **1931–**17
6.1 Labels to Be Tested **1931–**17
6.2 Performance Requirements **1931–**17
6.3 Testing **1931–**17

Annex A Explanatory Material **1931–**18

Annex B Informational References **1931–**19

Index **1931–**20

Copyright National Fire Protection Association
Provided by IHS under license with NFPA
No reproduction or networking permitted without license from IHS
Not for Resale

NFPA 1931

Standard for

Manufacturer's Design of Fire Department Ground Ladders

2004 Edition

IMPORTANT NOTE: This NFPA document is made available for use subject to important notices and legal disclaimers. These notices and disclaimers appear in all publications containing this document and may be found under the heading "Important Notices and Disclaimers Concerning NFPA Documents." They can also be obtained on request from NFPA or viewed at www.nfpa.org/disclaimers.

NOTICE: An asterisk (*) following the number or letter designating a paragraph indicates that explanatory material on the paragraph can be found in Annex A.

Information on referenced publications can be found in Chapter 2 and Annex B.

Chapter 1 Administration

1.1 Scope.

1.1.1* This standard specifies the requirements for the design of fire department ground ladders and for the design verification tests that are to be conducted by the ground ladder manufacturer.

1.1.2 The tests specified herein are the responsibility of the ladder manufacturer only and are not to be performed by fire departments.

1.2 Purpose.

1.2.1* This standard provides the manufacturer of fire department ground ladders with a set of performance requirements against which ladders are to be certified to ensure that the ground ladders are reliable and safe to use.

1.2.2 It is not the purpose of this standard to specify the details of construction.

1.2.3 The limitations imposed are for the purpose of providing reasonable safety requirements and establishing test methods.

1.3 Application.

1.3.1 This standard applies to the manufacture of all new ground ladders intended for use by fire department personnel for rescue, fire-fighting operations, and training.

1.3.2* These ladders are not to be used for any other purpose.

Chapter 2 Referenced Publications

2.1 General. The documents or portions thereof listed in this chapter are referenced within this standard and shall be considered part of the requirements of this document.

2.2 NFPA Publications. (Reserved)

2.3 Other Publications.

2.3.1 ANSI Publications. American National Standards Institute, Inc., 11 West 43rd Street, 4th floor, New York, NY 10036.

ANSI A14.1, *American National Standard for Ladders — Wood — Safety Requirements*, 2000.

ANSI A14.5, *American National Standard for Ladders — Portable Reinforced Plastic — Safety Requirements*, 2000.

2.3.2 ASTM Publication. American Society for Testing and Materials, 100 Barr Harbor Drive, West Conshohocken, PA 19428-2959.

ASTM B 117, *Standard Practice for Operating Salt Spray (Fog) Apparatus*, 2002.

Chapter 3 Definitions

3.1 General. The definitions contained in this chapter shall apply to the terms used in this standard. Where terms are not included, common usage of the terms shall apply.

3.2 NFPA Official Definitions.

3.2.1* Approved. Acceptable to the authority having jurisdiction.

3.2.2* Authority Having Jurisdiction (AHJ). An organization, office, or individual responsible for enforcing the requirements of a code or standard, or for approving equipment, materials, an installation, or a procedure.

3.2.3 Shall. Indicates a mandatory requirement.

3.2.4 Should. Indicates a recommendation or that which is advised but not required.

3.2.5 Standard. A document, the main text of which contains only mandatory provisions using the word "shall" to indicate requirements and which is in a form generally suitable for mandatory reference by another standard or code or for adoption into law. Nonmandatory provisions shall be located in an appendix or annex, footnote, or fine-print note and are not to be considered a part of the requirements of a standard.

3.3 General Definitions.

3.3.1 Angle of Inclination. The angle incorporated between the beams and a level plane.

3.3.2 Attic Extension Ladder. An extension ladder that is specifically designed to be used to gain entry through a scuttle, hatch, or other similarly restricted opening.

3.3.3 Bark Pocket. See 3.3.43.1.

3.3.4 Base (Bed) Section. The lowest or widest section of an extension ladder.

3.3.5 Beam (Side Rail). The main structural side of the ground ladder.

3.3.6 Bedded Position. The position in which the fly section(s) of an extension ladder is fully retracted with the pawls engaged.

3.3.7* Butt. The end of the beam that is placed on the ground, or other lower support surface, when ground ladders are in the raised position.

3.3.8* Butt Spurs (Feet). That component of ground ladder support that is in contact with the lower support surface to reduce slippage.

Copyright National Fire Protection Association
Provided by IHS under license with NFPA
No reproduction or networking permitted without license from IHS
Not for Resale

3.3.9 Check. See 3.3.43.2.

3.3.10 Collapsible Ladder. See 3.3.19, Folding Ladder.

3.3.11 Combination Ladder. A ground ladder that is capable of being used both as a stepladder and as a single or extension ladder.

3.3.12* Design Verification Tests. Tests of a ladder structure and components thereof that are performed by the ladder manufacturer to prove conformance to design requirements and which can potentially compromise the integrity of the tested ladder.

3.3.13 Designated Length. The length marked on the ladder.

3.3.14 Dogs. See 3.3.26, Pawls.

3.3.15 Duty Rating. The maximum load the ladder is designed to support when it is in use and properly positioned.

3.3.16 Extension Ladder. A non-self-supporting ground ladder that consists of two or more sections traveling in guides, brackets, or the equivalent arranged so as to allow length adjustment.

3.3.17 Fire Department Ground Ladder. Any portable ladder specifically designed for fire department use in rescue, firefighting operations, or training.

3.3.18 Fly Section(s). The upper section(s) of an extension ladder.

3.3.19 Folding Ladder. A single-section ladder with rungs that can be folded or moved to allow the beams to be brought into a position touching or nearly touching each other.

3.3.20 Halyard. Rope used on extension ladders for the purpose of raising a fly section(s).

3.3.21 Heat Sensor Label. A label that changes color at a preset temperature to indicate a specific heat exposure.

3.3.22 Knot. See 3.3.43.3.

3.3.23 Ladder. A device consisting of two beams (side rails) joined at regular intervals by cross pieces called rungs on which a person is supported during climbs for ascending or descending. *(See also 3.3.29, Pompier Ladder.)*

3.3.24 Ladder Nesting. The procedure whereby ladders of different sizes are positioned partially within one another to reduce the amount of space required for their storage on the apparatus.

3.3.25 Maximum Extended Length. The total length of the extension ladder when all fly sections are fully extended and all pawls are engaged.

3.3.26 Pawls. Devices attached to a fly section(s) to engage ladder rungs near the beams of the section below for the purpose of anchoring the fly section(s).

3.3.27 Permanent Deformation. That deformation remaining in any part of a ladder or its components after all test loads have been removed from the ladder.

3.3.28 Pitch Pocket. See 3.3.43.4.

3.3.29 Pompier Ladder (Scaling Ladder). A ladder having a single center beam only with rungs protruding on either side of the beam and with a large hook on top that is used for scaling.

3.3.30 Roof Ladder. A single ladder equipped with hooks at the top end of the ladder.

3.3.31 Rungs. The ladder cross pieces on which a person steps while ascending or descending.

3.3.32 Scaling Ladder. See 3.3.29, Pompier Ladder.

3.3.33 Side Rail. See 3.3.5, Beam.

3.3.34 Single Ladder. A non-self-supporting ground ladder, nonadjustable in length, consisting of only one section.

3.3.35 Slope of Grain. See 3.3.43.5.

3.3.36 Split. See 3.3.43.6.

3.3.37 Staypoles (Tormentors). Poles attached to each beam of the base section of extension ladders and used to assist in raising the ladder and to help provide stability of the raised ladder.

3.3.38 Tip. The end of the ladder opposite the butt end.

3.3.39 Tormentors or Tormentor Poles. See 3.3.37, Staypoles.

3.3.40 Ultimate Failure. Collapse of a ground ladder structure or component thereof.

3.3.41 Visible Damage. A permanent change in condition that is clearly evident by visual inspection without recourse to optical measuring or observation devices.

3.3.42 Visual Inspection. Observation by eye unaided by optical devices, except prescription eyeglasses or lenses.

3.3.43 Wood Irregularities. Natural characteristics in or on the wood that can lower its durability, strength, or utility.

3.3.43.1* *Bark Pocket Wood Irregularity.* An opening between annual growth rings that contains bark.

3.3.43.2 *Check Wood Irregularity.* A separation of the wood along the fiber direction that usually extends across the rings of annual growth and commonly results from stresses set up in the wood during seasoning.

3.3.43.3* *Knot Wood Irregularity.* A portion of a branch or limb embedded in the tree and cut during the process of lumber manufacture.

3.3.43.4 *Pitch Pocket Wood Irregularity.* An opening extending parallel to the annual growth rings that contains, or that has contained, either solid or liquid pitch.

3.3.43.5* *Slope of Grain Wood Irregularities.* A deviation of the fiber direction from a line parallel to the sides of the piece.

3.3.43.6 *Split Wood Irregularity.* A separation of the wood parallel to the fiber direction due to tearing of the wood fibers.

Chapter 4 Ladder Design

4.1 Requirements for All Ground Ladders.

4.1.1 Duty Rating. Ground ladders shall have a duty rating as specified in Table 4.1.1 when raised at a 75½ degree angle of inclination.

Table 4.1.1 Ground Ladder Duty Rating

Type	Maximum Load	
	kg	lb
Folding ladders	136	300
Pompier ladders	136	300
Combination ladders	340	750
Single and roof ladders	340	750
Extension ladders	340	750

Copyright National Fire Protection Association
Provided by IHS under license with NFPA
No reproduction or networking permitted without license from IHS
Not for Resale

4.1.2 Materials of Construction. Materials used in ground ladder construction shall meet the performance requirements of this standard.

4.1.2.1 All structural components of ground ladders shall be constructed of materials such that the ground ladder maintains at least 75 percent of the strength necessary to pass all test requirements in this standard at 149°C (300°F).

4.1.2.2 If varying types of metal are used in the construction of ground ladders, then the metals shall be chosen or finished to reduce electrolytic action.

4.1.2.3 Fiberglass materials shall meet the performance requirements of Chapter 7 of ANSI A14.5, *American National Standard for Ladders — Portable Reinforced Plastic — Safety Requirements.*

4.1.2.4 Wood components shall meet the requirements of Chapter 5 of ANSI A14.1, *American National Standard for Ladders — Wood — Safety Requirements.*

4.1.2.5 Wood irregularities shall not exceed the following requirements:

(1) The general slope of the grain shall not be steeper than 1 in 15.
(2) Knots shall not appear, except that pin knots in rungs shall be permitted.
(3) Pitch and bark pockets shall be permitted, provided that there is not more than one that is 1 mm (1/32 in.) in width, 51 mm (2 in.) in length, and 3 mm (1/8 in.) in depth.
(4) Checks shall not be more than 51 mm (2 in.) in length or 3 mm (1/8 in.) in depth.
(5) Splits shall not be more than 51 mm (2 in.) in length or 3 mm (1/8 in.) in depth.
(6) Cracks shall not be permitted.
(7) Compression wood shall not be permitted.
(8) Cross grain shall not be permitted.
(9) Chambers associated with black streaks shall not be permitted.

4.1.3 Ladder Construction.

4.1.3.1 Ground ladders shall be constructed in a manner to ensure that structural and workmanship defects do not exist that result in the structural strength being reduced below the requirements of this standard.

4.1.3.2 Ground ladders shall be constructed in a manner to ensure that sharp edges, burrs in excess of 0.4 mm (1/64 in.), or other defects that cut or tear clothing or skin do not exist.

4.1.3.3 The beams at the tip of each section of an extension ladder or a roof ladder shall be rounded to allow the ladder to slide on irregular surfaces without catching or snagging during placement or operations.

4.1.3.4 Butt spurs shall be provided on the butt end of each beam of single ladders and on the butt end of each beam of the base section of extension ladders.

4.1.3.5 Rungs shall not be less than 32 mm (1¼ in.) in diameter except as allowed by 4.1.3.5.1 and 4.1.3.5.2.

4.1.3.5.1 Folding and pompier ladder rungs shall be excluded from this requirement.

4.1.3.5.2 Swell center rungs on wood ladders shall be permitted to taper to 28.6 mm (1⅛ in.).

4.1.3.6* Rungs shall be uniformly spaced ±3 mm (±⅛ in.) on centers that are between 305 mm and 356 mm (12 in. and 14 in.).

4.1.3.7* The surfaces of rungs that are designed for use while ascending, descending, working, or standing shall be corrugated, serrated, knurled, dimpled, or coated with a skid-resistant material across their entire width.

4.1.4 Ladder Marking.

4.1.4.1 The designated length of the ground ladder shall be marked within 305 mm (12 in.) of the butt of each beam of single ladders and on each beam of the base section of extension ladders.

4.1.4.2 A unique identification number or alphanumeric code and the month and year of manufacture shall be branded or metal-stamped on each ground ladder or stamped on a metal plate that is permanently attached to each ground ladder.

4.1.4.3 All metal ground ladders shall bear the electrical hazard warning label that is shown in Figure 4.1.4.3 on the outside of each beam between 1.37 m and 1.83 m (4½ ft and 6 ft) from the butt.



FIGURE 4.1.4.3 Electrical Hazard Warning Label for Metal Ground Ladders.

4.1.4.4 All fiberglass and wood ground ladders shall bear the electrical hazard warning label that is shown in Figure 4.1.4.4 on the outside of each beam between 1.37 m and 1.83 m (4½ ft and 6 ft) from the butt.



FIGURE 4.1.4.4 Electrical Hazard Warning Label for Fiberglass and Wood Ground Ladders.

Copyright National Fire Protection Association
Provided by IHS under license with NFPA
No reproduction or networking permitted without license from IHS
Not for Resale

4.1.4.5 All ground ladders shall bear the ladder positioning label that is shown in Figure 4.1.4.5 between 1.37 m and 1.83 m (4½ ft and 6 ft) from the butt on the outside of both beams. Single ladders that are designed to be asymmetrical shall be permitted to have the label without the word "out" and the directional arrow.

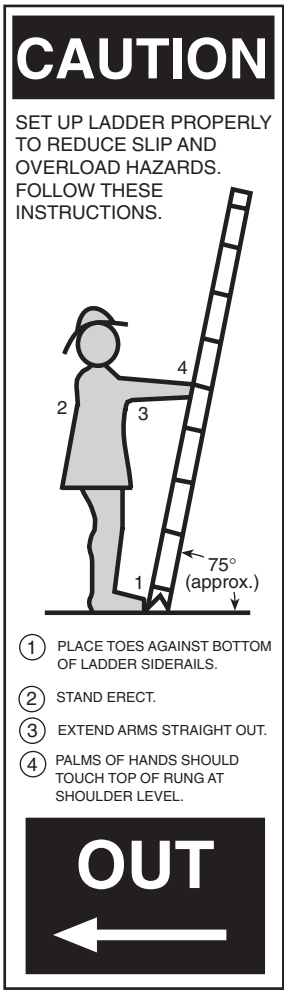

FIGURE 4.1.4.5 Ladder Positioning Label.

4.1.5 Heat Sensor Labels.

4.1.5.1 All metal and fiberglass ground ladders shall bear heat sensors that are preset for 149°C (300°F) ± 5 percent.

4.1.5.2 Each heat sensor label shall bear an expiration year and wording that indicates that the expiration date is at the end of that year.

4.1.5.3 Heat sensor labels shall be located on the inside of each beam of each section of the ladder immediately below the second rung from the tip of each section and immediately below the center rung of that section.

4.2 Additional Requirements for Single Ladders Only. The design requirements of this section shall apply in addition to the design requirements specified in Section 4.1.

4.2.1* Length. The designated length of a single ladder shall be the length of one beam excluding any butt spur. The actual length of the beam shall not be less than the designated length.

4.2.2 Width. The minimum inside width between beams for single ladders shall be 406 mm (16 in.).

4.3 Additional Requirements for Roof Ladders Only. The design requirements of this section shall apply in addition to the design requirements specified in Sections 4.1 and 4.2.

4.3.1 Ladders with double-tapered beams shall not be used in roof operations.

4.3.2 Folding Roof Hook Assemblies.

4.3.2.1* Folding roof hooks shall be provided on all roof ladders.

4.3.2.2 The roof hooks shall be directionally spring-locked and shall have tapered points to reduce slippage.

4.3.2.3 The roof hooks shall meet the design verification tests of Section 5.3 and have a minimum opening of not less than 150 mm (6 in.), measured perpendicular from the outside of the beam to the point.

4.4 Additional Requirements for Extension Ladders Only. The design requirements of this section shall apply in addition to the design requirements specified in Section 4.1.

4.4.1 Construction.

4.4.1.1 Extension ladders shall be constructed with a permanently affixed stop that is installed by the manufacturer.

4.4.1.1.1 The stop shall prevent ladders from overextending.

4.4.1.1.2 The manufacturer shall determine the location of this permanently affixed stop to ensure that the test requirements of this standard are met when the ladder is extended to maximum extended length.

4.4.1.2 Extension ladders shall not be constructed in a manner or method that necessitates the elimination of a rung on any section. One of the lower two rungs of the fly section shall be permitted to be replaced by the steel cross bar of a halyard-actuated rung lock system.

4.4.1.3 Extension ladders shall be constructed in a manner such that the rungs of each section align with the rungs of other sections when the ladder is extended and pawls are engaged.

4.4.2* Length.

4.4.2.1 The measured length of an extension ladder shall be the maximum extended length along the beams on one side excluding any butt spur. The measured length shall be permitted to be up to 150 mm (6 in.) shorter than the designated length.

4.4.2.2 Attic extension ladders shall not exceed 4.9 m (16 ft) in length.

4.4.3 Width.

4.4.3.1 Extension ladders shall have a minimum inside width between beams on any section of at least 406 mm (16 in.).

4.4.3.2 Attic extension ladders shall be permitted to have a minimum inside width between beams on any section of not less than 190 mm (7½ in.).

4.4.4 Hardware.

4.4.4.1 Hardware shall meet the minimum strength requirements of the ground ladder's component parts.

Copyright National Fire Protection Association
Provided by IHS under license with NFPA
No reproduction or networking permitted without license from IHS
Not for Resale

4.4.4.2 Hardware shall be corrosion resistant or protected against corrosion.

4.4.5 Halyard and Pulley.

4.4.5.1 Extension ladders more than 4.9 m (16 ft) in designated length shall be equipped with a halyard and pulley system.

4.4.5.2 The pulley shall be attached to the ladder in a manner that allows the rung to meet the test requirement of 5.2.3.

4.4.5.3 The pulley shall not be less than 32 mm (1¼ in.) in diameter, measured at the base of the sleeve.

4.4.5.4 The halyard shall not be less than 9.5 mm (⅜ in.) in diameter and shall have a minimum breaking strength of 374 kg (825 lb). Splices shall not be permitted.

4.4.5.5 On three- and four-section extension ladders, all fly sections beyond the first fly section shall be permitted to be extended by wire rope.

4.4.5.5.1 Such wire rope shall have a 5 to 1 safety factor while supporting 2 times the dead load weight of the fly section(s) that the cable is intended to raise.

4.4.5.5.2 If wire rope is used, a means for adjusting the length of wire rope shall be provided.

4.4.5.5.3 Splices shall not be permitted.

4.4.5.6* If a continuous halyard is used, a secondary means to secure the halyard from the ground prior to climbing shall be provided that is capable of supporting the pull on the halyard in case the pawl disengages while persons are on the ladder.

4.4.6 Pawls.

4.4.6.1 Pawls shall be of a positive, mechanical-action type and shall engage a rung of the supporting section.

4.4.6.2 Pawls shall be fastened or secured to beams in a manner such that vibration and use will not cause bolts and nuts to loosen.

4.4.6.3 Pawls shall be constructed to engage without cutting the rung.

4.4.6.4 The hooks on pawls shall be finished without sharp edges or points.

4.4.6.5 Pawls shall be designed and attached so that they rest on the rungs as near to the beams as possible.

4.4.7 Staypoles.

4.4.7.1 Staypoles shall be furnished on all extension ladders of more than 12.2 m (40 ft) designated length.

4.4.7.2 All staypoles shall be permanently attached to the ground ladder and shall not be removed for ladder nesting.

4.4.7.3 Staypole spikes shall not project beyond the butt of the base section when the extension ladder is in the bedded position.

4.4.7.4 A means shall be provided to hold the staypoles in a secure position against the base section when the staypoles are not in use.

4.4.7.5 A label shall be provided on each staypole.

4.4.7.5.1 The label shall be positioned between 1.37 m and 1.83 m (4½ ft and 6 ft) from the butt of the pole.

4.4.7.5.2 The label shall read:

Place staypoles only when both poles
can be placed properly.

4.5 Additional Requirements for Combination Ladders Only. The design requirements of this section shall apply in addition to the design requirements specified in Section 4.1.

4.5.1 Length.

4.5.1.1 The designated length of combination ladders shall be determined in the single or extension configuration.

4.5.1.2 The designated length of combination ladders shall not exceed 4.9 m (16 ft).

4.5.2 Width. The minimum inside width between beams for combination ladders shall be 305 mm (12 in.).

4.6 Additional Requirements for Folding Ladders Only. The design requirements of this section shall apply in addition to the design requirements specified in Section 4.1.

4.6.1 Construction.

4.6.1.1 Folding ladders shall be equipped with foot pads that have a nonskid or skid-reducing material on the bottom side of the foot pad.

4.6.1.2 Folding ladders shall have a positive locking device to hold the ladder in the open position.

4.6.2 Length. The designated length of folding ladders shall not exceed 4.3 m (14 ft).

4.6.3 Width. The minimum inside width between beams for folding ladders in the open position shall be 190 mm (7½ in.).

4.7 Additional Requirements for Pompier Ladders. The design requirements of this section shall apply in addition to the design requirements specified in Section 4.1.

4.7.1 Construction.

4.7.1.1 Pompier ladders shall be equipped with a serrated steel hook that is permanently fastened to the center beam of the ladder.

4.7.1.2 Pompier ladders shall be equipped with a minimum of two stand-off brackets, each capable of maintaining a minimum distance of 178 mm (7 in.) between the centerline of the rung and the portion of the bracket that contacts the wall.

4.7.2 Length. The designated length of pompier ladders shall not exceed 4.9 m (16 ft).

4.7.3 Width. The minimum overall width of the ladder shall be 305 mm (12 in.).

4.8 Manufacturer Certification.

4.8.1 Ground ladders that meet all of the requirements of this standard shall be so certified by the ladder manufacturer.

4.8.2 A label stating that the ground ladder meets the requirements of this standard shall be affixed to the ladder.

Chapter 5 Design Verification Tests

5.1 Requirements for All Design Verification Tests.

5.1.1 Design verification tests shall be conducted on a representative sample of the longest length of a specific product

Copyright National Fire Protection Association
Provided by IHS under license with NFPA
No reproduction or networking permitted without license from IHS
Not for Resale

design during the initial evaluation and shall be repeated thereafter whenever there is a change in the design, method of manufacturing, or material.

5.1.1.1 The design verification tests shall be the responsibility of the manufacturer and shall be performed only on new, unused ladders.

5.1.1.2 Ladders subjected to design verification tests shall be destroyed after testing is completed.

5.1.2 Design verification tests shall not be conducted on ladders that have been in use or have been subjected to prior damage, misuse, or abuse.

5.1.3 Test loads shall remain in place for a minimum of 5 minutes unless otherwise specified in this standard.

5.1.4 Conformance to the design verification test requirements shall be determined 1 minute after removal of the test load.

5.2 Single, Extension, and Combination Ladder Design Verification Tests.

5.2.1 Horizontal Bending Tests.

5.2.1.1 The ladder shall be positioned for testing and shall be tested as shown in Figure 5.2.1.1.

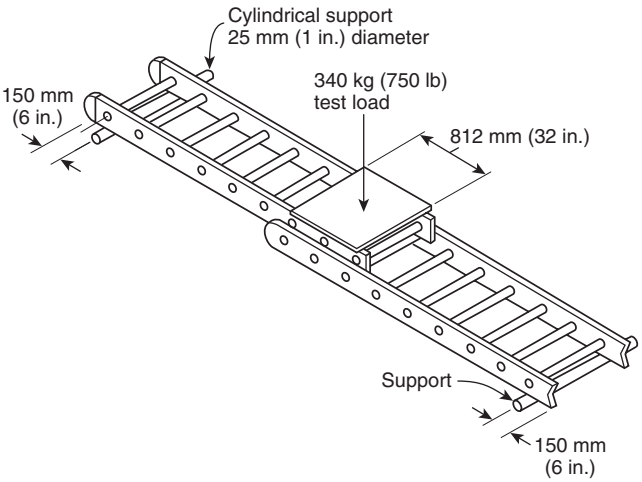

FIGURE 5.2.1.1 Position of Ladder During Design Verification Horizontal Bending Test.

5.2.1.1.1 The ladder shall be placed in a flat, horizontal position and supported 150 mm (6 in.) from each end of the ladder.

5.2.1.1.2 When extension and combination ladders are tested, the ladder shall be extended to the maximum extended length with pawls engaged.

5.2.1.2 Auxiliary means shall be permitted to be used to ensure that the ladder pawls remain engaged during the test to prevent movement of the fly section relative to the base section during the test.

5.2.1.3 A test load of 340 kg (750 lb) shall be applied equally across the beams of the ladder and 406 mm (16 in.) each side of lengthwise center inclusive.

5.2.1.4 The ladder shall sustain the test load without ultimate failure.

5.2.2 Deflection Test.

5.2.2.1 The ladder shall be positioned for testing and shall be tested as shown in Figure 5.2.2.1.

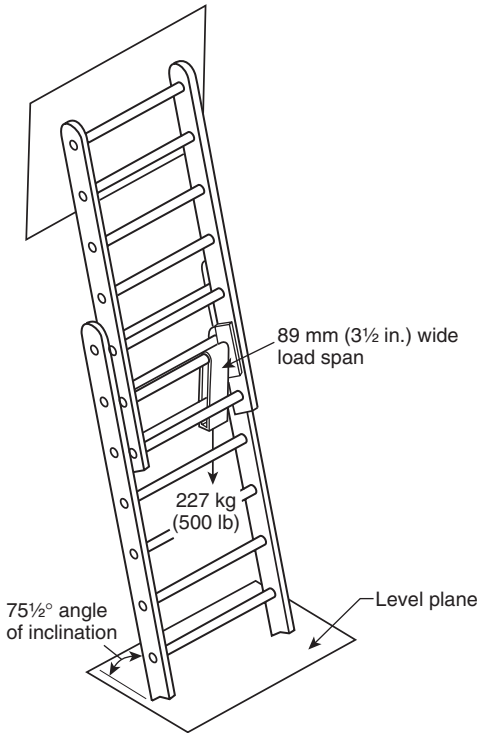

FIGURE 5.2.2.1 Position of Ladder During Design Verification Deflection Test.

5.2.2.2 The ladder shall be extended to the maximum extended length and set to an angle of inclination of 75½ degrees.

5.2.2.3 A test load of 227 kg (500 lb) shall be applied to the rung at the vertical center of the ladder adjacent to one of the beams over a span of 89 mm (3½ in.).

5.2.2.4 The butt spur on the beam that is opposite the test load shall remain in contact with the ground or other supporting surface.

5.2.2.5 The test load then shall be reapplied to an area of the rung adjacent to the opposite beam, and the test shall be repeated.

5.2.3 Rung-Bending Strength Test.

5.2.3.1 The rung-bending strength test shall be conducted on a test unit that consists of either a single section of the ladder or on a three-rung test sample taken from the maximum width portion of a like ladder section with a like rung.

5.2.3.1.1 The test unit shall be positioned for testing and shall be tested as shown in Figure 5.2.3.1.1.

5.2.3.1.2 The test unit shall be supported and the test load shall be applied using a standard loading block that is located in the center of the rung.

5.2.3.1.3 The rung being tested shall not be braced.

Copyright National Fire Protection Association
Provided by IHS under license with NFPA
No reproduction or networking permitted without license from IHS
Not for Resale

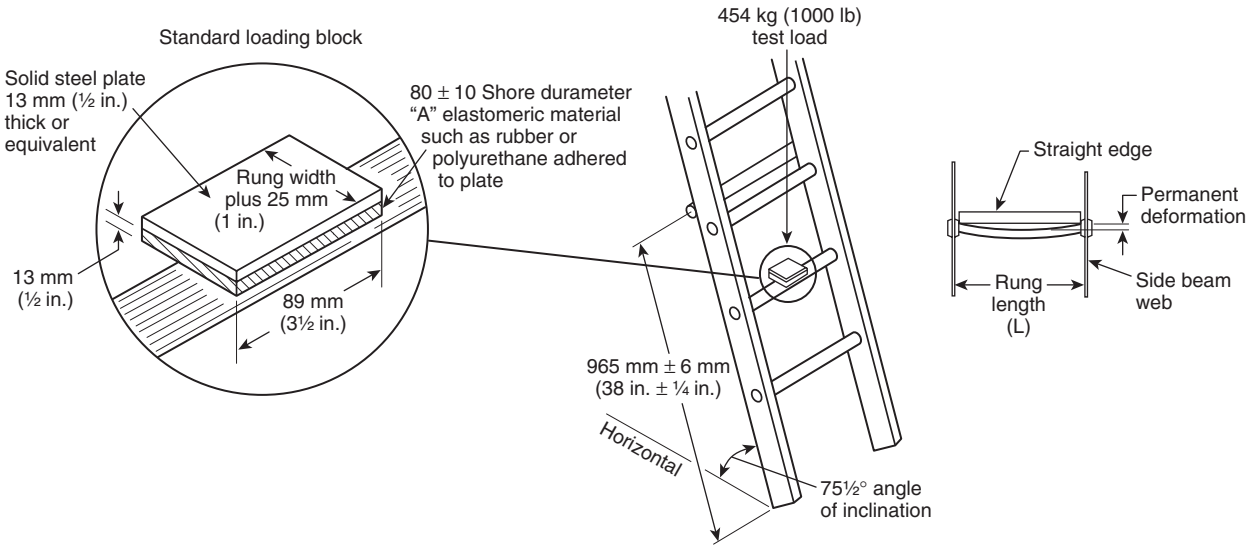

FIGURE 5.2.3.1.1 Design Verification Rung-Bending Test.

5.2.3.2 A downward test load of 454 kg (1000 lb) shall be applied on the standard loading block.

5.2.3.3 When the test load is removed, the permanent deformation shall be measured with a straight edge and a rule, as shown in Figure 5.2.3.1.1.

5.2.3.4 The permitted permanent deformation shall not exceed $L/50$ for rung length (L), measured between the beams.

5.2.3.5 There shall not be any permanent deformation that is greater than the permitted deformation specified in 5.2.3.4, and there shall not be any other visible damage.

5.2.4 Rung-to-Beam Shear Strength Test.

5.2.4.1 The rung-to-beam shear strength test shall be conducted on a test unit that consists of either a single section of the ladder or on a three-rung test section taken from a like ladder having the same rung cross section and rung joint.

5.2.4.1.1 The test unit shall be positioned for testing and shall be tested as shown in Figure 5.2.4.1.1.

5.2.4.1.2 The test unit shall be set at an angle of inclination of 75½ degrees.

5.2.4.2 A downward test load of 454 kg (1000 lb) shall be applied on the widest like cross section, on both braced and unbraced test rungs, as near the beam as possible.

5.2.4.2.1 If a three-rung test section is used, the test shall be applied to the center rung.

5.2.4.2.2 If single sections of a ladder are tested, the test load shall be applied to the third or fourth rung from the butt.

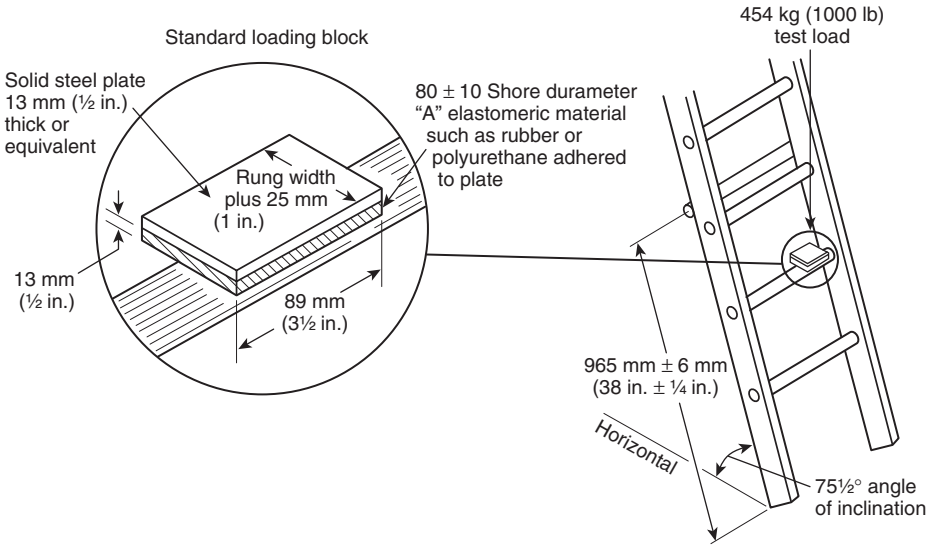

FIGURE 5.2.4.1.1 Design Verification Rung-to-Beam Shear Strength Test.

Copyright National Fire Protection Association
Provided by IHS under license with NFPA
No reproduction or networking permitted without license from IHS
Not for Resale

5.2.4.3 When the test load is removed, the test unit shall show no permanent deformation or ultimate failure either in the fastening means attaching the rung or in the beam.

5.2.5 Rung Torque Test.

5.2.5.1 The rung torque test shall be conducted on a test unit that consists of either a single section of the ladder or on a short test section that comprises at least one rung and two beams.

5.2.5.2 The test unit shall be positioned for testing and shall be tested as shown in Figure 5.2.5.2.

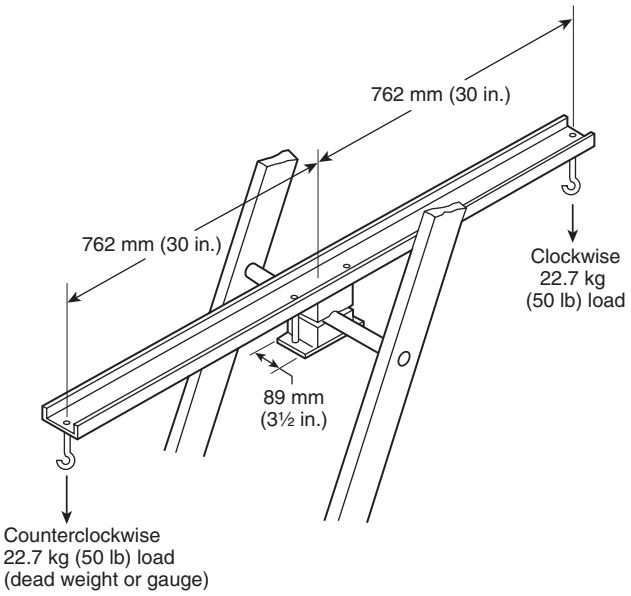

FIGURE 5.2.5.2 Design Verification Rung Torque Test.

5.2.5.3 A torque test load of 169.5 N·m (1500 in.-lb) shall be applied in a clockwise and then a counterclockwise direction, alternately, for 10 cycles.

5.2.5.4 The rung joint shall be secured to the beams so that the alternating torque load shall not cause relative motion between the rung and the beams in excess of 9 degrees, based on a 1.6 mm (1⁄16 in.) maximum movement for a 32 mm (1¼ in.) diameter round rung.

5.2.6 Side Sway Test.

5.2.6.1 The side sway test shall be conducted on a test unit that consists of a single ladder, individual sections from an extension ladder, or individual sections from a combination ladder.

5.2.6.1.1 All sections of an extension ladder shall be individually tested.

5.2.6.1.2 Both sections of a combination ladder shall be individually tested.

5.2.6.2 The test unit shall be positioned for testing and shall be tested as shown in Figure 5.2.6.2.

5.2.6.2.1 The test unit shall be placed on edge, resting on level supports that are located 150 mm (6 in.) from each end of the ladder.

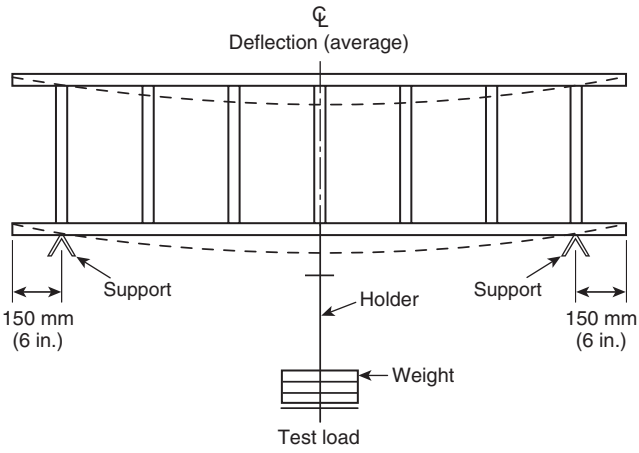

Note: The deflection is the difference between the height of the lower edge of the ladder side when unloaded (solid line) and when loaded (dotted line).

FIGURE 5.2.6.2 Position of Ladder for Design Verification Side Sway Test.

5.2.6.2.2 The beams shall be in a horizontal plane, and the rungs shall be in a vertical plane and perpendicular to the ground.

5.2.6.3 A preload of 27.2 kg (60 lb) shall be applied at the center of the span over a 89 mm (3½ in.) length of the bottom beam. The preload shall be held for a period of 1 minute and then unloaded.

5.2.6.4 A test load of 63.5 kg (140 lb) shall then be applied to the center of the span over a 89 mm (3½ in.) length of the bottom beam.

5.2.6.4.1 The test load shall be applied by hanging weights from the bottom of the lower beam.

5.2.6.4.2 The test load shall be centered with respect to the width of the beam.

5.2.6.5 Each test unit shall withstand this test without any permanent deformation in excess of 1/1000 of the effective span of the beams.

5.2.7 Beam Cantilever Bending Tests.

5.2.7.1 The beam cantilever bending test shall be conducted on a test unit that consists of either a single ladder section or the base section of an extension ladder.

5.2.7.1.1 Any butt spurs affixed to the section shall be removed before the test is conducted.

5.2.7.1.2 The test unit shall be placed on edge with the rungs in a vertical plane.

5.2.7.1.3 The lower beam shall be unsupported from the butt end to the midpoint of the lowest rung.

5.2.7.1.4 The remainder of the lower beam shall be supported and clamped to a surface that has sufficient strength and rigidity so as not to allow a deflection of more than 0.4 mm (1⁄64 in.) at the clamping points during the test.

5.2.7.2 For the cantilever-in bending test, the test unit shall be positioned for testing and shall be tested as shown in Figure 5.2.7.2.

Copyright National Fire Protection Association
Provided by IHS under license with NFPA
No reproduction or networking permitted without license from IHS
Not for Resale

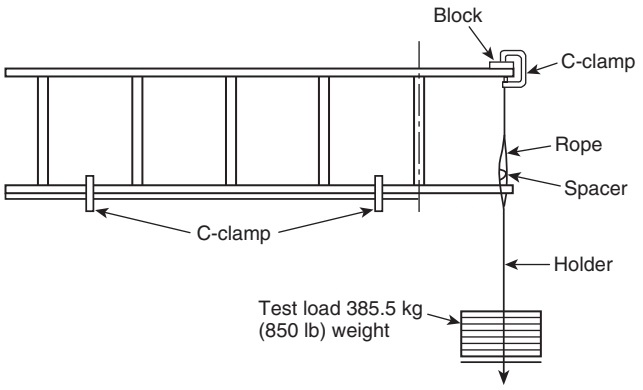

FIGURE 5.2.7.2 Position of Ladder for Design Verification Beam Cantilever-In Bending Test.

5.2.7.2.1 The test load shall consist of a weight of 385.5 kg (850 lb).

5.2.7.2.2 The test load shall be applied to a block that is 25 mm (1 in.) thick, 51 mm (2 in.) long measured along the beam, and of a width equal to the clear distance between flanges.

5.2.7.2.3 The block shall be positioned such that it rests on the full width of the upper beam at the extreme bottom end of the beam and shall be held in place by a clamp.

5.2.7.2.4 The test load shall be suspended from the clamp so that it is acting through the vertical neutral axis of the beam.

5.2.7.2.5 The allowable permanent deformation of the upper beam shall not exceed 12.7 mm (½ in.).

5.2.7.3 For the cantilever-out bending test, the test unit shall be positioned for testing and shall be tested as shown in Figure 5.2.7.3.

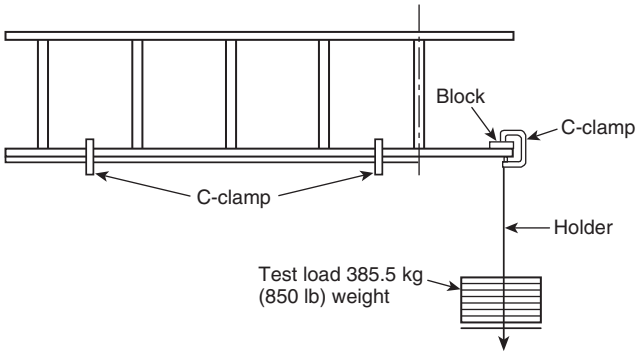

FIGURE 5.2.7.3 Position of Ladder for Design Verification Beam Cantilever-Out Bending Test.

5.2.7.3.1 The test load shall consist of a weight of 385.5 kg (850 lb).

5.2.7.3.2 The test load shall be applied to a block that is 25 mm (1 in.) thick, 51 mm (2 in.) long measured along the beam, and of a width equal to the clear distance between flanges.

5.2.7.3.3 The block shall be positioned such that it rests on the full width of the lower beam at the extreme bottom end of the beam and shall be held in place by a clamp.

5.2.7.3.4 The test load shall be suspended from the clamp so that it is acting through the vertical neutral axis of the beam.

5.2.7.3.5 The allowable permanent deformation of the lower beam shall not exceed 12.7 mm (½ in.).

5.2.8 Ladder Section Twist Test.

5.2.8.1 The ladder shall be positioned for testing and shall be tested as shown in Figure 5.2.8.1.

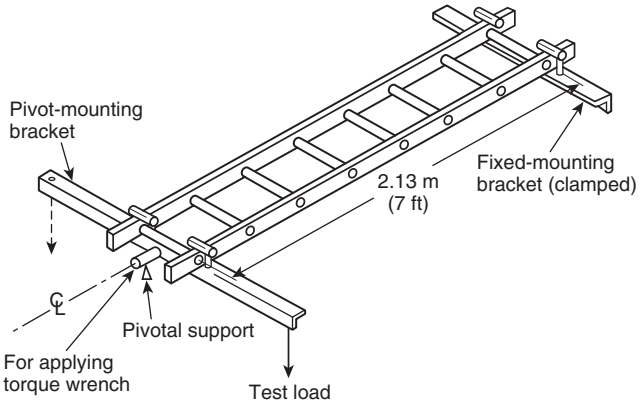

FIGURE 5.2.8.1 Position of Ladder for Design Verification Ladder Section Twist Test.

5.2.8.1.1 The ladder section twist test shall be conducted on a ladder base section of at least 2.13 m (7 ft) in length, supported over a 2.13 m (7 ft) test span.

5.2.8.1.2 The ladder shall be placed in a flat horizontal position, and support for the ladder on one end shall be fixed.

5.2.8.1.3 The ladder shall be tightly clamped onto the test fixtures during this test.

5.2.8.1.4 The test torque shall be applied by either a torque wrench or test loads that are applied on the end of the arm.

5.2.8.2 A preload of 68 N·m (600 in.-lb) shall be used to establish a reference for angular deflection and shall be applied to the ladder in a clockwise direction for a minimum of 1 minute, after which the ladder shall be unloaded.

5.2.8.3 A test torque of 135 N·m (1200 in.-lb) then shall be applied in a clockwise direction for 5 minutes.

5.2.8.4 The angle of twist measured from the horizontal position in the clockwise direction shall not be greater than 14 degrees as measured while the load is applied.

5.2.8.5 A preload of 68 N·m (600 in.-lb) then shall be used to establish a reference for angular deflection and shall be applied to the ladder in a counterclockwise direction for a minimum period of 1 minute, after which the ladder shall be unloaded.

5.2.8.6 A test torque of 135 N·m (1200 in.-lb) then shall be applied in a counterclockwise direction.

5.2.8.7 The angle of twist measured from the horizontal position in the counterclockwise direction shall not be greater than 14 degrees as measured while the load is applied.

Copyright National Fire Protection Association
Provided by IHS under license with NFPA
No reproduction or networking permitted without license from IHS
Not for Resale

5.2.9 Butt Spur Slip Test.

5.2.9.1 All butt spurs for single and extension ladders shall be tested for skid resistance.

5.2.9.2 The ladder shall be positioned for testing and shall be tested as shown in Figure 5.2.9.2.

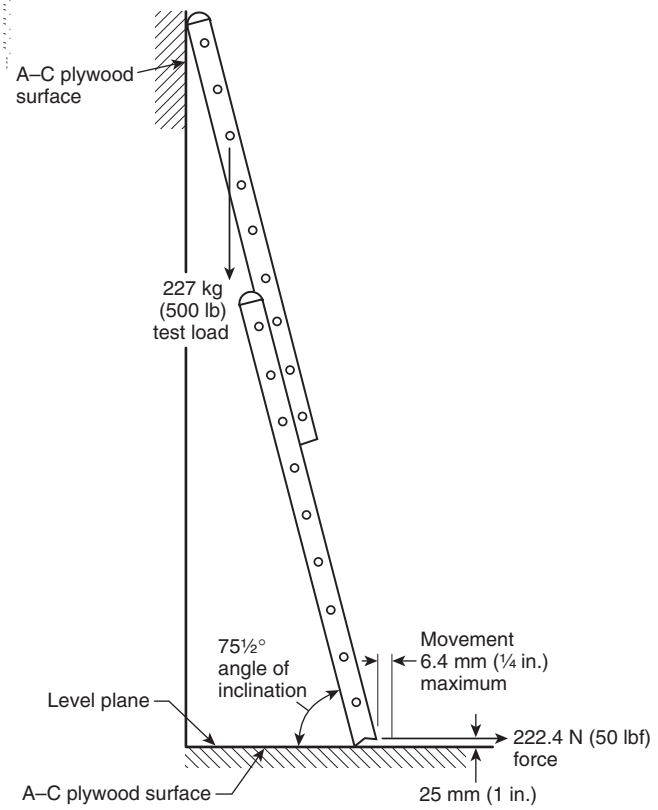

FIGURE 5.2.9.2 Design Verification Butt Spur Slip Test.

5.2.9.2.1 The test unit shall consist of a 4.9 m (16 ft) extension ladder extended to the maximum extended length and set at an angle of inclination of 75½ degrees.

5.2.9.2.2 The test surfaces shall be A–C plywood, the "A" surface of which shall be presanded using No. 320 fine wet/dry sandpaper.

5.2.9.2.3 The butt of the test unit shall be placed in contact with the "A" surface of the plywood with the grain parallel to the test load.

5.2.9.2.4 The tip of the fly section shall rest against the "A" surface of the plywood with the grain run in a vertical direction.

5.2.9.3 A test load of 227 kg (500 lb) shall be attached to the third rung from the tip of the fly section.

5.2.9.4 A horizontal pulling force of 222.4 N (50 lbf) applied to the bottom of the test unit 25 mm (1 in.) above the test surface shall not cause movement in excess of 6.4 mm (¼ in.) across the test surface.

5.3 Additional Design Verification Tests for Roof Ladders Only. The design verification tests of this section shall be performed in addition to the design verification tests specified in Section 5.2 and in accordance with the design verification testing requirements specified in Section 5.1.

5.3.1 The roof ladder shall be positioned for testing and shall be tested as shown in Figure 5.3.1.

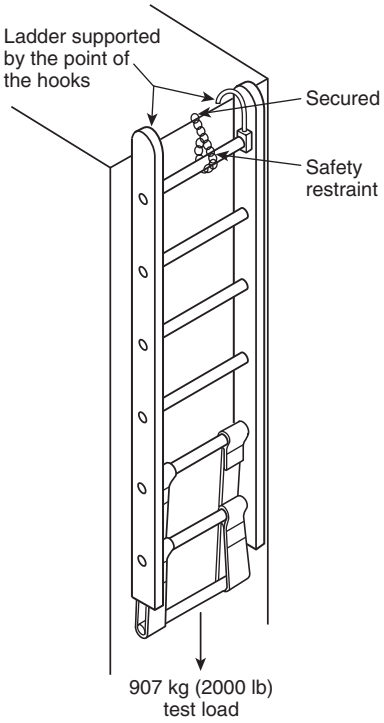

FIGURE 5.3.1 Design Verification Roof Hook Test.

5.3.1.1 The ladder shall be hung solely by the roof hooks in a vertical position from a fixture that is capable of supporting the entire test load and weight of the ladder.

5.3.1.2 The roof hooks shall be supported only by the points of the hooks.

5.3.1.3 The ladder shall be secured in such a manner as to retain the ladder in the test position in order to prevent injury to test personnel if the hooks fail during the test.

5.3.2 A test load of 907 kg (2000 lb) shall be placed over as many rungs as needed, using weight increments consistent with safety and ease of handling.

5.3.3 The test load shall be applied for a minimum of 1 minute.

5.3.4 Ladder and roof hook assemblies shall sustain this test load with no damage to the structure.

5.3.5 Any deformation to the hooks shall not exceed 5 degrees.

5.4 Additional Design Verification Tests for Extension and Combination Ladders Only. The design verification tests of this section shall be performed in addition to the design verification tests specified in Section 5.2 and in accordance with the design verification testing requirements specified in Section 5.1.

Copyright National Fire Protection Association
Provided by IHS under license with NFPA
No reproduction or networking permitted without license from IHS
Not for Resale

5.4.1 Beam and Hardware Load Test.

5.4.1.1 The beam and hardware load test shall be conducted on a test unit that consists of either the shortest full-size ladder manufactured or of a test section of sufficient length for test purposes.

5.4.1.1.1 If a full-size ladder is used, the fly section shall be extended a minimum of one rung beyond the bedded position.

5.4.1.1.2 Short test sections of extension ladders shall consist of portions of the base and fly sections with all the hardware or fittings attached.

5.4.1.2 The test unit shall be positioned for testing and shall be tested as shown in Figure 5.4.1.2.

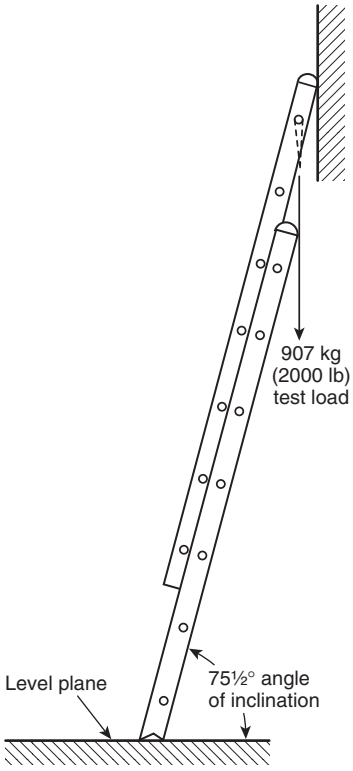

FIGURE 5.4.1.2 Design Verification Beam and Hardware Load Test.

5.4.1.2.1 The test unit shall be placed at an angle of inclination of 75½ degrees with both pawls engaged.

5.4.1.2.2 A downward distributed test load of 907 kg (2000 lb) shall be applied to the top rung of the fly section.

5.4.1.3 The test unit shall sustain this test load with no permanent deformation or other visible damage of the beams and hardware.

5.4.2 Single Pawl Load Test.

5.4.2.1 The single pawl load test shall be conducted on a test unit that consists of a single pawl attached in its normal configuration to a length of beam sufficient for test purposes with the test unit set at an angle of inclination of 75½ degrees.

5.4.2.2 The ladder shall be positioned for testing and shall be tested as shown in Figure 5.4.2.2.

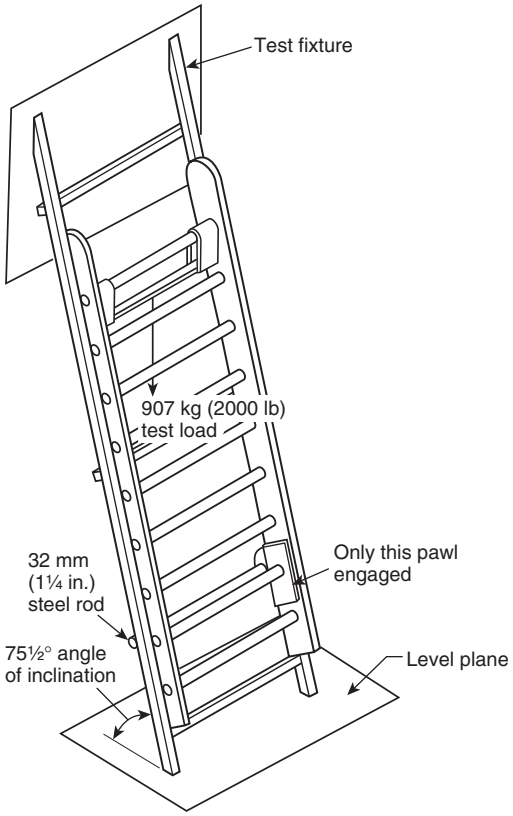

FIGURE 5.4.2.2 Design Verification Single Pawl Load Test.

5.4.2.2.1 The pawl shall be engaged over a fixed steel rod of the same diameter as a rung.

5.4.2.2.2 A downward test load of 907 kg (2000 lb) shall be exerted on the end of the beam.

5.4.2.2.3 The beam shall be permitted to be guided to prevent it from turning.

5.4.2.3 The test unit shall sustain this test load without disengagement of the pawl or disengagement of the pawl attachment to the beam.

5.4.3 Pawl Tip Load Test.

5.4.3.1 The pawl tip load test shall be conducted on a test unit that consists of either the shortest full-size ladder manufactured or of a test section of a length sufficient for test purposes.

5.4.3.1.1 If a full-size ladder is used, the fly section shall be extended a minimum of one rung beyond the bedded position.

5.4.3.1.2 Short test sections shall consist of portions of the base and fly sections of the extension ladder with the pawls attached.

5.4.3.2 The test unit shall be positioned for testing and shall be tested as shown in Figure 5.4.3.2.

5.4.3.2.1 The test unit shall be set at an angle of inclination of 75½ degrees with both pawls partially engaged.

--`,,,,,,-`-`,,`,,`,`,,`---

Copyright National Fire Protection Association
Provided by IHS under license with NFPA
No reproduction or networking permitted without license from IHS
Not for Resale

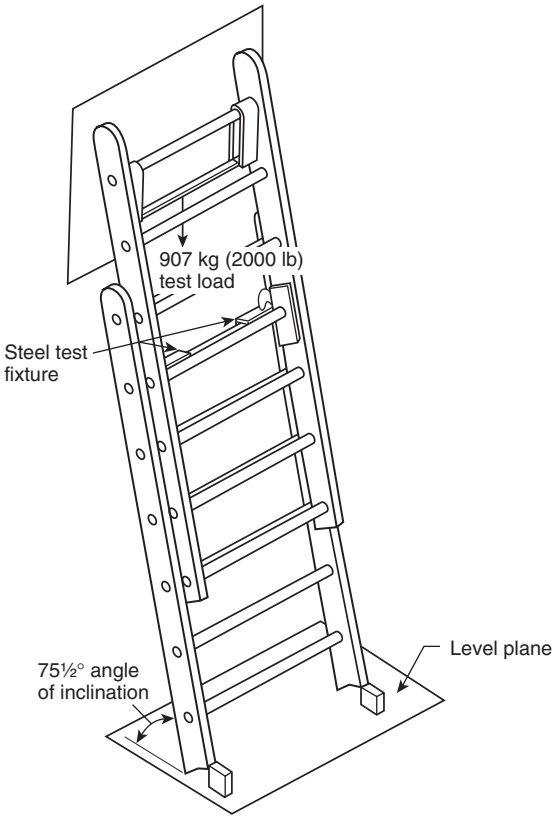

FIGURE 5.4.3.2 Design Verification Pawl Tip Load Test.

5.4.3.2.2 The butt end of the test unit shall be prevented from slipping by a block or equivalent means.

5.4.3.2.3 The tip of each pawl shall bear on the center of a steel test fixture that is placed over the top of a rung.

5.4.3.2.4 During the test, each pawl shall be prevented from pivoting by a means located adjacent to the pivot point of the pawl, but that means of preventing pivoting shall not in any way affect that portion of the pawl under test.

5.4.3.2.5 A downward distributed test load of 907 kg (2000 lb) shall be applied.

5.4.3.3 The test unit and components shall sustain the test load without ultimate failure.

5.5 Additional Design Verification Tests for Extension Ladders Only. The design verification tests of this section shall be performed in addition to the design verification tests specified in Sections 5.2 and 5.4 and in accordance with the design verification testing requirements specified in Section 5.1.

5.5.1 Cyclic Rung–Pawl Test.

5.5.1.1 The cyclic rung–pawl test shall not apply to fixed-type or manually operated pawls used on extension ladders or combination ladders.

5.5.1.2 A machine equivalent to that shown in Figure 5.5.1.2(a) shall be used to operate the pawl through the following cycle, as shown in Figure 5.5.1.2(b):

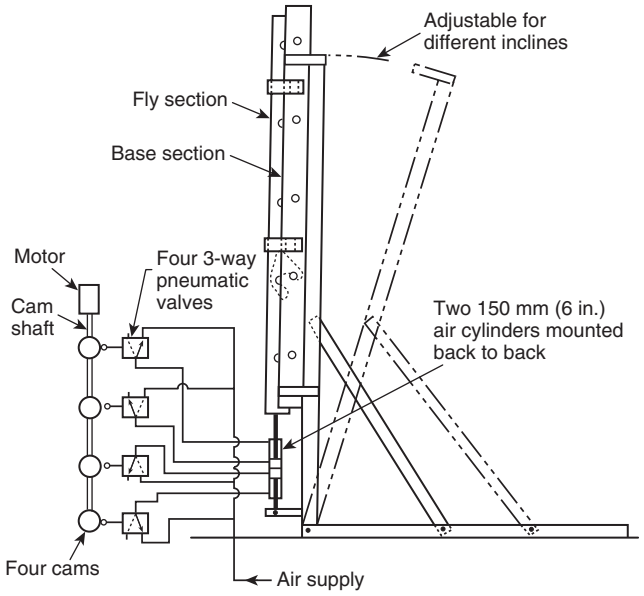

FIGURE 5.5.1.2(a) Design Verification Cyclic Rung–Pawl Test.

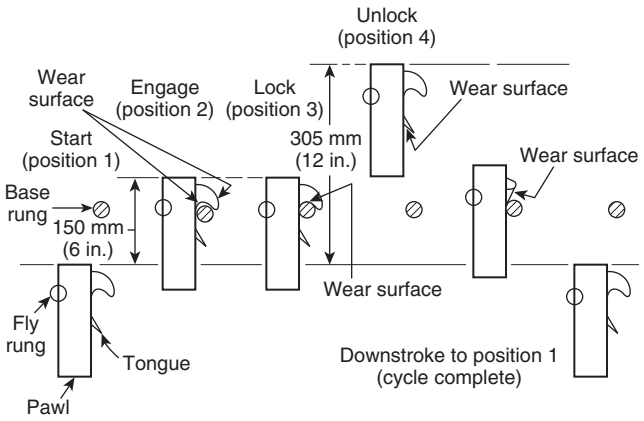

FIGURE 5.5.1.2(b) Design Verification Rung–Pawl Testing Cycle.

(1) One 150 mm (6 in.) upstroke to allow the pawl to engage the rung
(2) A full 150 mm (6 in.) downstroke to allow the pawl onto the rung
(3) A full 305 mm (12 in.) upstroke to disengage the pawl
(4) A full 305 mm (12 in.) downstroke to return the pawl to the starting position

5.5.1.3 Pawls shall be tested with the ladder set at an angle of inclination of 75½ degrees.

5.5.1.4 The pawl shall be permitted to be manually lubricated prior to or during the test.

5.5.1.5 The stroke speed shall be between 178 mm and 356 mm (7 in. and 14 in.) per second.

Copyright National Fire Protection Association
Provided by IHS under license with NFPA
No reproduction or networking permitted without license from IHS
Not for Resale

5.5.1.6 A minimum of 6000 cycles shall be imposed.

5.5.1.7 Any malfunction of the pawl or fracture of its components, including springs, shall be a failure of this test.

5.5.1.8 The presence of wear that does not affect the functioning of the pawl shall not constitute failure.

5.5.2 Multisection Extending Force Test.

5.5.2.1 The multisection extending force test shall be conducted on a complete extension ladder.

5.5.2.1.1 The ladder shall be set at a 90 degree vertical position in the bedded position.

5.5.2.1.2 The base section shall be permitted to be braced or otherwise held to maintain vertical alignment.

5.5.2.2 A measured downward test force shall be applied to the rope if the ladder has a halyard and a pulley system installed.

5.5.2.2.1 The test force shall be smoothly applied to cause vertical extension of the fly section of 610 mm (2 ft) or more, at a rate of between 150 mm and 305 mm (6 in. and 12 in.) per second.

5.5.2.2.2 For those ladders not equipped with a halyard and a pulley, the measured test force shall be applied vertically to the bottom rung of the fly section.

5.5.2.3 The maximum measured test force that occurs during each pull shall be recorded in kilograms (pounds) of pull.

5.5.2.4 Three test pulls shall be done for each ladder, and the maximum forces shall be averaged for the three pulls.

5.5.2.5 The average maximum kilograms (pounds) of pull shall not exceed two times the weight of one of the ladder fly sections.

5.6 Additional Design Verification Tests for Combination Ladders Only.

5.6.1 Testing Requirements. The compression test defined in 5.6.2 shall be performed in addition to the design verification tests specified in Sections 5.2 and 5.4 and in accordance with the design verification testing requirements specified in Section 5.1.

5.6.2 Compression Test.

5.6.2.1 The combination ladder shall be positioned for testing and shall be tested as shown in Figure 5.6.2.1.

5.6.2.2 The ladder shall be tested in its A-frame position, with the test load of 907 kg (2000 lb) applied uniformly to the top rungs.

5.6.2.3 The ladder shall sustain the test load without ultimate failure.

5.7 Design Verification Tests for Folding Ladders Only.

5.7.1 Testing Requirements. The horizontal bending test defined in 5.7.2 shall be performed in accordance with the design verification testing requirements specified in Section 5.1.

5.7.2 Horizontal Bending Test.

5.7.2.1 The ladder shall be positioned for testing and shall be tested as shown in Figure 5.7.2.1.

5.7.2.2 The folding ladder shall be placed in a flat, horizontal position and supported 150 mm (6 in.) from each end.

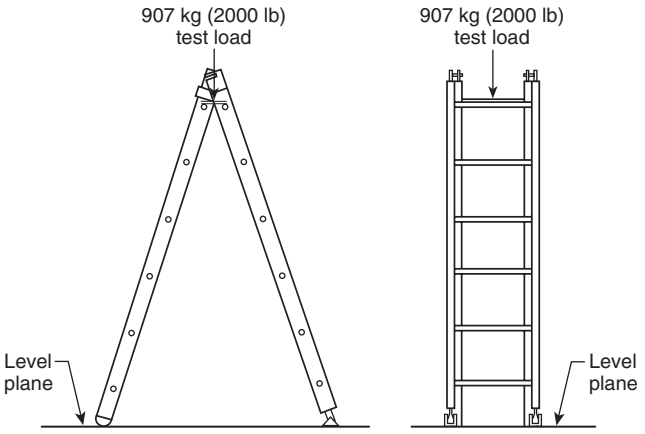

FIGURE 5.6.2.1 Design Verification Combination Ladder Compression Test.

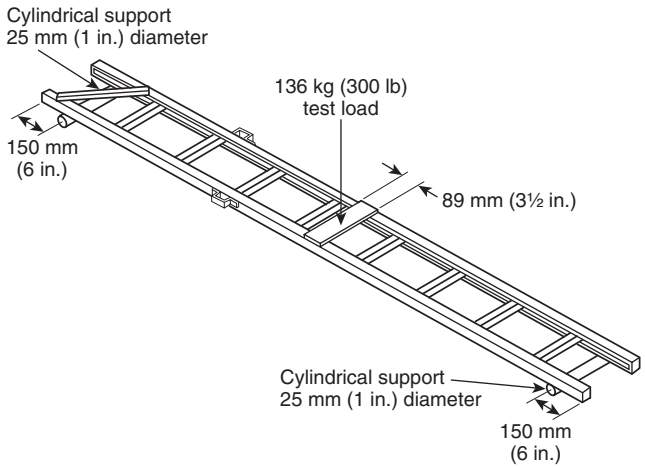

FIGURE 5.7.2.1 Design Verification Folding Ladder Horizontal Bending Test.

5.7.2.3 A test load of 136 kg (300 lb) shall be applied at the center of the ladder span and shall be equally distributed across both beams over an area 89 mm (3½ in.) wide.

5.7.2.4 The ladder shall withstand this test without ultimate failure.

5.8 Design Verification Tests for Pompier Ladders Only. The design verification tests of this section shall be performed in accordance with the design verification testing requirements specified in Section 5.1.

5.8.1 The ladder shall be positioned for testing and shall be tested as shown in Figure 5.8.1.

5.8.2 The ladder shall be tested in the vertical hanging position supported only by the hook.

5.8.3 A test load of 907 kg (2000 lb) shall be applied.

5.8.4 The ladder shall sustain this test load without ultimate failure.

Copyright National Fire Protection Association
Provided by IHS under license with NFPA
No reproduction or networking permitted without license from IHS
Not for Resale

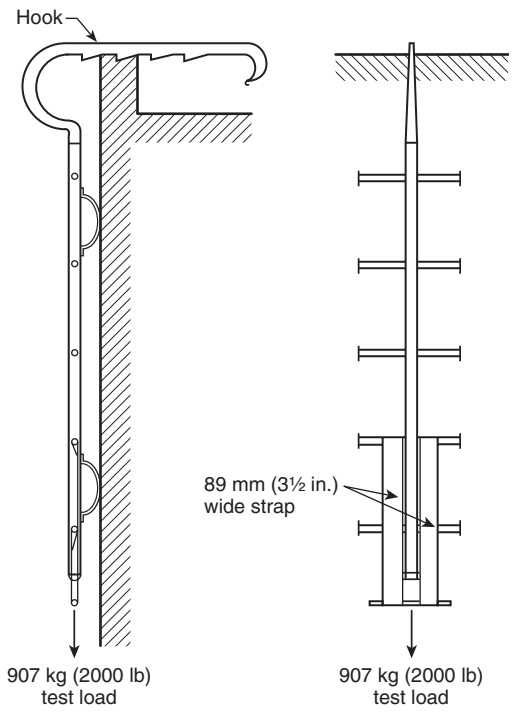

FIGURE 5.8.1 Design Verification Pompier Ladder Test.

Chapter 6 Label Tests

6.1 Labels to Be Tested. All labels required for ground ladders in 4.1.4.3, 4.1.4.4, 4.1.4.5, 4.1.5, 4.4.7.5, and 4.8.2 shall meet the requirements of this chapter.

6.2 Performance Requirements.

6.2.1 Legibility. When tested as specified in 6.3.2, the labels shall retain their original color, readability, and clarity without any darkening, fogging, or blistering.

6.2.2 Adhesion. When tested as specified in 6.3.3.1, the labels shall have an average adhesion of not less than 0.35 N per linear millimeter (2 lbf per linear inch) of label width, and not less than 50 percent of the average adhesion measured for 6.3.3.1 when tested as specified in 6.3.3.2.

6.3 Testing.

6.3.1 Preconditioning.

6.3.1.1 The sample labels shall be applied to a surface material of the same type to which the label will be affixed, and this shall constitute a test sample. The test sample shall be exposed for 72 hours at 23°C ± 1°C (73°F ± 2°F) and 50 ± 2 percent relative humidity.

6.3.1.2 The sample labels shall be applied to a surface material of the same type to which the label will be affixed, and this shall constitute a test sample.

6.3.1.2.1 The test sample shall be exposed for 72 hours to a temperature of 23°C ± 1°C (73°F ± 2°F) and a relative humidity of 50 ± 2 percent.

6.3.1.2.2 The test sample shall then be exposed for 24 hours to a temperature of –40°C (–40°F).

6.3.1.3 The sample labels shall be applied to a surface material of the same type to which the label will be affixed, and this shall constitute the test sample.

6.3.1.3.1 The test sample shall be exposed for 72 hours to a temperature of 23°C ± 1°C (73°F ± 2°F) and a relative humidity of 50 ± 2 percent.

6.3.1.3.2 The test sample shall then be exposed for 6 weeks to a temperature of 60°C ± 2°C (140°F ± 4°F) and a relative humidity of 97 ± 3 percent.

6.3.1.4 The sample labels shall be applied to a surface material of the same type to which the label will be affixed, and this shall constitute the test sample.

6.3.1.4.1 The test sample shall be exposed for 72 hours to a temperature of 23°C ± 1°C (73°F ± 2°F) and a relative humidity of 50 ± 2 percent.

6.3.1.4.2 The test sample shall then be exposed for 90 days of aging at 87°C ± 1°C (190°F ± 2°F) in a mechanical convection air oven.

6.3.1.5 The sample labels shall be applied to a surface material of the same type to which the label will be affixed, and this shall constitute a test sample.

6.3.1.5.1 The test sample shall be exposed for 72 hours to a temperature of 23°C ± 1°C (73°F ± 2°F) and a relative humidity of 50 ± 2 percent.

6.3.1.5.2 The test sample shall then be exposed for 720 hours to ultraviolet light and water.

6.3.1.5.2.1 The ultraviolet light shall be obtained from two stationary, enclosed carbon-arc lamps.

(A) The arc of each lamp shall be formed between two vertical carbon electrodes, 12.7 mm (½ in.) in diameter, located at the center of a revolvable, vertical metal cylinder, 787 mm (31 in.) in diameter and 450.9 mm (17¾ in.) in height.

(B) Each arc shall be enclosed with a No. 9200-PX clear Pyrex™ glass globe.

(C) The samples shall be mounted vertically on the inside of the revolvable cylinder, facing the lamps, and the cylinder shall continuously revolve around the stationary lamps at 1 rpm.

6.3.1.5.2.2 A system of nozzles shall be provided so that each sample, in turn, is sprayed with water as the cylinder revolves.

6.3.1.5.2.3 During each 20-minute operating cycle, each sample shall be exposed to the light and water spray for 3 minutes and to the light only for 17 minutes.

6.3.1.5.2.4 The air temperature within the revolving cylinder of the apparatus during its operation shall be 63°C ± 5°C (145°F ± 9°F).

6.3.1.6 The sample labels shall be applied to a surface material of the same type to which the label will be affixed, and this shall constitute the test sample.

6.3.1.6.1 The test sample shall be exposed for 72 hours to a temperature of 23°C ± 1°C (73°F ± 2°F) and a relative humidity of 50 ± 2 percent.

Copyright National Fire Protection Association
Provided by IHS under license with NFPA
No reproduction or networking permitted without license from IHS
Not for Resale

6.3.1.6.2 The test sample shall then be exposed for 240 hours in a salt spray test as specified by ASTM B 117, *Standard Practice for Operating Salt Spray (Fog) Apparatus.*

6.3.1.7 The sample labels shall be applied to a surface material of the same type to which the label will be affixed, and this shall constitute the test sample.

6.3.1.7.1 The test sample shall be exposed for 72 hours to a temperature of 23°C ± 1°C (73°F ± 2°F) and a relative humidity of 50 ± 2 percent.

6.3.1.7.2 The test sample shall then be exposed for 48 hours of immersion in distilled water.

6.3.1.8 The sample labels shall be applied to a surface material of the same type to which the label will be affixed, and this shall constitute the test sample.

6.3.1.8.1 The test sample shall be exposed for 72 hours to a temperature of 23°C ± 1°C (73°F ± 2°F) and a relative humidity of 50 ± 2 percent.

6.3.1.8.2 Following the exposure required in 6.3.1.8.1, the test sample shall be exposed for 10 days of aging at 180°C (356°F) in a mechanical convection air oven.

6.3.2 Legibility Test.

6.3.2.1 Test samples shall be prepared as required by and exposed to the preconditions specified in 6.3.1.1, after which the label shall be examined to determine color, readability, and clarity.

6.3.2.2 Test samples shall then be prepared as required by and exposed to each precondition as specified in 6.3.1.2 through 6.3.1.8.

6.3.2.3 After exposure to each precondition, the label shall be compared to the label that was preconditioned as specified in 6.3.1.1 to determine its compliance with 6.2.1.

6.3.3 Adhesion Test.

6.3.3.1 Two test samples shall be prepared as required by and exposed to the preconditions as specified in 6.3.1.1, after which the samples shall be tested as specified in 6.3.3.3 to determine the average adhesion.

6.3.3.2 Test samples then shall be prepared as required by and exposed to each precondition as specified in 6.3.1.2 through 6.3.1.8 and tested as specified in 6.3.3.3.

6.3.3.3 Labels shall be pulled from the surface material at an angle of 90 degrees to the surface, at a constant speed of 25.4 mm (1.0 in.) per minute.

6.3.3.3.1 The force to remove the label shall be recorded automatically on a chart, and the average force calculated in N per linear millimeter (lbf per linear inch) of label width.

6.3.3.3.2 Test results shall be obtained from two test samples to comprise an average for each precondition.

6.3.3.3.3 Test results obtained from samples specified in 6.3.3.2 shall be compared to the test results obtained from samples specified in 6.3.3.1 to determine compliance with 6.2.2.

Annex A Explanatory Material

Annex A is not a part of the requirements of this NFPA document but is included for informational purposes only. This annex contains explanatory material, numbered to correspond with the applicable text paragraphs.

A.1.1.1 Ground ladders used in the fire service must be constructed to rigid standards to ensure that the ladders are of the highest quality. These ladders often provide the only means of fire fighter entry into a building or portions of a building and could be the only means of egress for victims trapped by a fire within a building. Fire department ground ladders serve as a path for fire fighters to transport people, equipment, and extinguishing agents from one level to a higher or lower level. Because the lives of fire fighters and fire victims often rely on the performance, without failure, of these valuable pieces of fire department equipment, these standards of performance are critical.

A.1.2.1 It is recognized that specific details on ladder construction materials have been established by other organizations such as the American National Standards Institute, U.S. Department of Agriculture Forest Products Laboratory, and the Aluminum Association. This standard should never be interpreted as establishing lower materials strength criteria than the criteria set forth in such recognized standards.

Fire department ground ladders constructed to meet and certified as meeting the requirements of this standard will provide reasonable safety for fire fighters and victims during use, provided that fire departments that purchase or use ground ladders meeting the requirements of this standard comply with the requirements of NFPA 1932, *Standard on Use, Maintenance, and Service Testing of In-Service Fire Department Ground Ladders.*

A.1.3.2 Ladders used by fire department personnel for purposes other than rescue, fire fighting, and training and that are not transported on fire department apparatus should meet the requirements of applicable ANSI and OSHA standards.

A.3.2.1 Approved. The National Fire Protection Association does not approve, inspect, or certify any installations, procedures, equipment, or materials; nor does it approve or evaluate testing laboratories. In determining the acceptability of installations, procedures, equipment, or materials, the authority having jurisdiction may base acceptance on compliance with NFPA or other appropriate standards. In the absence of such standards, said authority may require evidence of proper installation, procedure, or use. The authority having jurisdiction may also refer to the listings or labeling practices of an organization that is concerned with product evaluations and is thus in a position to determine compliance with appropriate standards for the current production of listed items.

A.3.2.2 Authority Having Jurisdiction (AHJ). The phrase "authority having jurisdiction," or its acronym AHJ, is used in NFPA documents in a broad manner, since jurisdictions and approval agencies vary, as do their responsibilities. Where public safety is primary, the authority having jurisdiction may be a federal, state, local, or other regional department or individual such as a fire chief; fire marshal; chief of a fire prevention bureau, labor department, or health department; building official; electrical inspector; or others having statutory authority. For insurance purposes, an insurance inspection department, rating bureau, or other insurance company representative may be the authority having jurisdiction. In many circumstances, the property owner or his or her designated agent assumes the role of the

--`,,,,,,-`-`,,`,,`,`,,`---

Copyright National Fire Protection Association
Provided by IHS under license with NFPA
No reproduction or networking permitted without license from IHS
Not for Resale

authority having jurisdiction; at government installations, the commanding officer or departmental official may be the authority having jurisdiction.

A.3.3.7 Butt. A butt can be the lower end of beams or can be added devices.

A.3.3.8 Butt Spurs (Feet). Butt spurs can be the lower end of beams or can be added devices.

A.3.3.12 Design Verification Tests. NFPA 1931 provides the design requirements and the design verification tests for fire department ground ladders. Design verification tests are the responsibility of the manufacturer and are to be performed only on new, unused ladders. Because of the severity of the tests, the integrity of the ladder can be compromised, which is why the tested ladders are destroyed after completion of the tests. These tests are not intended to be performed on any ladders that are in service or intended to be placed in service.

A.3.3.43.1 Bark Pocket Wood Irregularity. Bark pockets appear as dark streaks on radial surfaces and as rounded areas on tangential surfaces.

A.3.3.43.3 Knot Wood Irregularity. Knots are classified according to size, quality, and location in the cross section of a piece of lumber. The size of the knot is determined by its average diameter on the surface of the piece of lumber.

A.3.3.43.5 Slope of Grain Wood Irregularities. Cross grain can be diagonal, spiral, or both.

A.4.1.3.6 Rung spacing of 356 mm (14 in.) can facilitate easier leg locks when users are wearing protective clothing that is in accordance with NFPA 1500, *Standard on Fire Department Occupational Safety and Health Program*. Rung spacing of 305 mm (12 in.) can result in more climbing power.

A.4.1.3.7 Rubber rung covers are available.

A.4.2.1 Single ladders become unwieldy and difficult to handle when they exceed 9.1 m (30 ft) in length. However, it is recognized that certain local conditions can make longer single ladders desirable, and this recommendation should not exclude such special conditions.

A.4.3.2.1 The materials used in the construction of folding roof hook assemblies for roof ladders should be selected on the basis of their ability to withstand water, heat, chemicals, and loads imposed on hooks during fireground operations.

Fire departments that use roof ladders in areas where snow and ice accumulate on roofs might want to use an even larger hook to ensure the ladder holds over a ridge that is covered with snow and ice.

A.4.4.2 Fire department ground ladders should not exceed 15.2 m (50 ft) in designated length. Ground ladders greater than 15.2 m (50 ft) long are unwieldy and require increased personnel and specialized training.

A.4.4.5.6 Because a continuous halyard cannot be tied off, a secondary means to prevent retraction of the fly section must be provided in case there is inadvertent disengagement of the pawls.

Annex B Informational References

B.1 Referenced Publications. The following documents or portions thereof are referenced within this standard for informational purposes only and are thus not part of the requirements of this document unless also listed in Chapter 2.

B.1.1 NFPA Publications. National Fire Protection Association, 1 Batterymarch Park, Quincy, MA 02169-7471.

NFPA 1500, *Standard on Fire Department Occupational Safety and Health Program*, 2002 edition.

NFPA 1932, *Standard on Use, Maintenance, and Service Testing of In-Service Fire Department Ground Ladders*, 2004 edition.

B.1.2 Other Publications. (Reserved)

B.2 Informational References. The following documents or portions thereof are listed here as informational resources only. They are not a part of the requirements of this document.

B.2.1 ANSI Publication. American National Standards Institute, Inc., 25 West 43rd Street, 4th floor, New York, NY 10036.

ANSI A14.2, *American National Standard for Ladders — Portable Metal — Safety Requirements*, 2000.

B.3 References for Extracts. (Reserved)

--`,,,,,,-`-`,,`,,`,`,,`---

Copyright National Fire Protection Association
Provided by IHS under license with NFPA
No reproduction or networking permitted without license from IHS
Not for Resale

Index

© 2004 National Fire Protection Association. All Rights Reserved.

The copyright in this index is separate and distinct from the copyright in the document that it indexes. The licensing provisions set forth for the document are not applicable to this index. This index may not be reproduced in whole or in part by any means without the express written permission of NFPA.

-A-

Adhesion test, label 6.2.2, 6.3.3
Angle of inclination (definition) 3.3.1
Application of standard 1.3, A.1.3.2
Approved (definition) 3.2.1, A.3.2.1
Attic extension ladders 4.4.2.2, 4.4.3.2
Definition 3.3.2
Authority having jurisdiction (definition) 3.2.2, A.3.2.2

-B-

Bark pockets ..... *see* Wood irregularities
Base (bed) section (definition) 3.3.4
Beam (side rail) 4.1.3.3, 4.1.3.4
Definition 3.3.5
Double-tapered 4.3.1
Ladder measurements and 4.2.1, 4.2.2, 4.4.2.1, 4.4.3.1, 4.4.3.2, 4.5.2
Marking of ..... 4.1.4.1, 4.1.4.3 to 4.1.4.5, 4.1.5.3
Pawls secured to 4.4.6.2, 4.4.6.5
Pompier ladder hook attached to 4.7.1.1
Tests
Beam and hardware load test 5.4.1
Beam cantilever bending test 5.2.7
Bedded position 5.4.1.1.1
Definition 3.3.6
Bending tests
Beam cantilever 5.2.7
Horizontal 5.2.1, 5.7.2
Butt 4.4.7.3
Definition 3.3.7, A.3.3.7
Ladder markings, position of ..... 4.1.4.1, 4.1.4.3 to 4.1.4.5
Butt spurs (feet) 4.1.3.4, 4.2.1, 4.4.2.1, 5.2.2.4
Definition 3.3.8, A.3.3.8
Slip test 5.2.9

-C-

Cantilever bending tests, beam 5.2.7
Certification 4.8
Checks ..... *see* Wood irregularities
Collapsible ladders ..... *see* Folding ladders
Combination ladders
Definition 3.3.11
Design verification tests 5.2, 5.4, 5.6
Special design requirements 4.5
Compression test 5.6.1
Construction 4.1.3
Extension ladders 4.4.1
Folding ladders 4.6.1
Materials for 4.1.2
Pompier ladders 4.7.1
Corrosion 4.4.4.2
Cyclic rung–pawl test 5.5.1

-D-

Damage, visible (definition) 3.3.41
Definitions ..... Chap. 3
Deflection test 5.2.2
Deformation, permanent (definition) 3.3.27
Design ..... Chap. 4
Designated length
Combination ladders 4.5.1
Definition 3.3.13
Extension ladders 4.4.2, A.4.4.2
Folding ladders 4.6.2
Marking of 4.1.4.1
Pompier ladders 4.7.2
Single ladders 4.2.1, A.4.2.1
Design verification tests ..... Chap. 5
Definition 3.3.12, A.3.3.12
Dogs ..... *see* Pawls
Duty rating 4.1.1
Definition 3.3.15

-E-

Electrical hazard warning label ..... 4.1.4.3, 4.1.4.4, Chap. 6
Extension ladders ..... *see also* Attic extension ladders
Butt spurs 4.1.3.4
Definition 3.3.16
Design verification tests 5.2, 5.4, 5.5
Halyard and pulley systems 4.4.5, A.4.4.5.6
Hardware 4.4.4
Marking 4.1.4.1
Pawls 4.4.5.6, 4.4.6, A.4.4.5.6
Special design requirements 4.4, A.4.4.2, A.4.4.5.6
Staypoles 4.4.7

-F-

Fiberglass ground ladders
Construction 4.1.2.3
Electrical hazard warning label ..... 4.1.4.4, Chap. 6
Heat sensor labels ..... 4.1.5.1, Chap. 6
Fire department ground ladders ... *see also* Fiberglass ground ladders; Metal ground ladders
Definition 3.3.17
Design ..... Chap. 4
Design verification tests ..... Chap. 5
Definition 3.3.12
Labels ..... *see* Labels
Marking 4.1.4
Wood ground ladders
Construction 4.1.2.4
Electrical hazard warning label ..... 4.1.4.4, Chap. 6
Fly sections 4.4.1.2, 4.4.5.5, 5.2.1.2, 5.4.1.1.1, 5.4.1.1.2, A.4.4.5.6
Definition 3.3.18
Folding ladders
Definition 3.3.19
Design verification tests 5.7
Special design requirements 4.6
Folding roof hook assemblies 4.3.2, A.4.3.2.1

-G-

Ground ladders, fire department ..... *see* Fire department ground ladders

-H-

Halyards 4.4.5, A.4.4.5.6
Definition 3.3.20
Hardware 4.4.4
Heat sensor labels ..... 4.1.5, Chap. 6
Definition 3.3.21
Horizontal bending test 5.2.1, 5.7.2

Copyright National Fire Protection Association
Provided by IHS under license with NFPA
No reproduction or networking permitted without license from IHS
Not for Resale

-I-

Identification numbers 4.1.4.2
Inside ladder width
Combination ladders 4.5.2
Extension ladders 4.4.3
Folding ladders 4.6.3
Single ladders 4.2.2
Inspection, visual (definition) 3.3.42

-K-

Knots ..... *see* Wood irregularities

-L-

Labels
Certification 4.8
Electrical hazard warning labels 4.1.4.3, 4.1.4.4
Heat sensor labels 4.1.5
Definition 3.3.21
Performance requirements 6.2
Positioning label 4.1.4.5
Staypoles 4.4.7.5
Tests ..... Chap. 6
Ladder (definition) ..... 3.3.23; *see also* Fire department ground ladders
Ladder nesting 4.4.7.2
Definition 3.3.24
Ladder section twist test 5.2.8
Legibility test, label 6.2.1, 6.3.2
Length
Designated (definition) 3.3.13
Maximum extended (definition) 3.3.25
Load tests
Pawl tip 5.4.3
Single pawl 5.4.2

-M-

Marking of ladders 4.1.4
Maximum extended length (definition) 3.3.25
Metal ground ladders
Construction 4.1.2.2
Electrical hazard warning label ..... 4.1.4.3, Chap. 6
Heat sensor labels ..... 4.1.5.1, Chap. 6
Multisection extending force test 5.5.2

-P-

Pawls 4.4.1.3, 4.4.5.6, 4.4.6, 5.2.1.1.2, 5.2.1.2, A.4.4.5.6
Definition 3.3.26
Tests
Cyclic rung–pawl test 5.5.1
Pawl tip load test 5.4.3
Single pawl load test 5.4.2
Permanent deformation (definition) 3.3.27
Pitch pockets ..... *see* Wood irregularities
Pompier ladders
Definition 3.3.29
Design verification tests 5.8
Special design requirements 4.7
Pulleys 4.4.5
Purpose of standard 1.2, A.1.2.1

-R-

References ..... Chap. 2, Annex B
Roof hook assemblies 4.3.2, A.4.3.2.1
Roof ladders
Definition 3.3.30
Design verification tests 5.3
Special design requirements 4.3, A.4.3.2.1
Rungs ..... 4.1.3.5 to 4.1.3.7, A.4.1.3.6, A.4.1.3.7
Definition 3.3.31
Extension ladders 4.4.1.2, 4.4.1.3
Pawls and 4.4.6.1, 4.4.6.3, 4.4.6.5
Pompier ladder brackets 4.7.1.2
Tests
Cyclic rung–pawl 5.5.1
Rung-bending strength 5.2.3
Rung-to-beam shear strength 5.2.4
Rung torque 5.2.5

-S-

Scaling ladders ..... *see* Pompier ladders
Scope of standard 1.1, A.1.1.1
Shall (definition) 3.2.3
Should (definition) 3.2.4
Side rail ..... *see* Beam (side rail)
Side sway test 5.2.6
Single ladders
Butt spurs 4.1.3.4
Definition 3.3.34
Design verification tests 5.2
Marking 4.1.4.1, 4.1.4.5
Special design requirements 4.2, A.4.2.1
Single pawl load test 5.4.2
Skid-resistant material, use of 4.1.3.7, 4.6.1.1, A.4.1.3.7
Slip test, butt spur 5.2.9
Slope of grain ..... *see* Wood irregularities
Split ..... *see* Wood irregularities
Standard (definition) 3.2.5
Staypoles (tormentors) 4.4.7
Definition 3.3.37

-T-

Tests
Design verification tests ..... Chap. 5
Definition 3.3.12
Label ..... Chap. 6
Tips 4.1.3.3
Definition 3.3.38
Tormentors or tormentor poles ..... *see* Staypoles (tormentors)
Twist test, ladder section 5.2.8

-U-

Ultimate failure (definition) 3.3.40

-V-

Visible damage (definition) 3.3.41
Visual inspection (definition) 3.3.42

-W-

Width
Inside ladder ..... *see* Inside ladder width
Maximum overall width of rungs
Pompier ladders 4.7.3
Wood ground ladders
Construction 4.1.2.4
Electrical hazard warning label ..... 4.1.4.4, Chap. 6
Wood irregularities 4.1.2.5
Bark pocket ..... 4.1.2.5(3)
Definition 3.3.43.1, A.3.3.43.1
Check wood ..... 4.1.2.5(4)
Definition 3.3.43.2
Definition 3.3.43
Knot wood ..... 4.1.2.5(2)
Definition 3.3.43.3, A.3.3.43.3
Pitch pocket ..... 4.1.2.5(3)
Definition 3.3.43.4
Slope of grain ..... 4.1.2.5(1)
Definition 3.3.43.5, A.3.3.43.5
Split wood ..... 4.1.2.5(5)
Definition 3.3.43.6

Copyright National Fire Protection Association
Provided by IHS under license with NFPA
No reproduction or networking permitted without license from IHS
Not for Resale

Sequence of Events Leading to Publication of an NFPA Committee Document

Call goes out for proposals to amend existing document or for recommendations on new document.

▼

Committee meets to act on proposals, to develop its own proposals, and to prepare its report.

▼

Committee votes on proposals by letter ballot. If two-thirds approve, report goes forward. Lacking two-thirds approval, report returns to committee.

▼

Report — *Report on Proposals* (ROP) — is published for public review and comment.

▼

Committee meets to act on each public comment received.

▼

Committee votes on comments by letter ballot. If two-thirds approve, supplementary report goes forward. Lacking two-thirds approval, supplementary report returns to committee.

▼

Supplementary report — *Report on Comments* (ROC) — is published for public review.

▼

NFPA membership meets (Annual or Fall Meeting) and acts on committee report (ROP or ROC).

▼

Committee votes on any amendments to report approved at NFPA Annual or Fall Meeting.

▼

Appeals to Standards Council on Association action must be filed within 20 days of the NFPA Annual or Fall Meeting.

▼

Standards Council decides, based on all evidence, whether or not to issue standard or to take other action, including upholding any appeals.

Committee Membership Classifications

The following classifications apply to Technical Committee members and represent their principal interest in the activity of the committee.

M *Manufacturer:* A representative of a maker or marketer of a product, assembly, or system, or portion thereof, that is affected by the standard.

U *User:* A representative of an entity that is subject to the provisions of the standard or that voluntarily uses the standard.

I/M *Installer/Maintainer:* A representative of an entity that is in the business of installing or maintaining a product, assembly, or system affected by the standard.

L *Labor:* A labor representative or employee concerned with safety in the workplace.

R/T *Applied Research/Testing Laboratory:* A representative of an independent testing laboratory or independent applied research organization that promulgates and/or enforces standards.

E *Enforcing Authority:* A representative of an agency or an organization that promulgates and/or enforces standards.

I *Insurance:* A representative of an insurance company, broker, agent, bureau, or inspection agency.

C *Consumer:* A person who is, or represents, the ultimate purchaser of a product, system, or service affected by the standard, but who is not included in the *User* classification.

SE *Special Expert:* A person not representing any of the previous classifications, but who has a special expertise in the scope of the standard or portion thereof.

NOTES:

1. "Standard" connotes code, standard, recommended practice, or guide.
2. A representative includes an employee.
3. While these classifications will be used by the Standards Council to achieve a balance for Technical Committees, the Standards Council may determine that new classifications of members or unique interests need representation in order to foster the best possible committee deliberations on any project. In this connection, the Standards Council may make such appointments as it seems appropriate in the public interest, such as the classification of "Utilities" in the National Electrical Code Committee.
4. Representatives of subsidiaries of any group are generally considered to have the same classification as the parent organization.

--`,,,,,,-`-`,,`,,`,`,,`---

Copyright National Fire Protection Association
Provided by IHS under license with NFPA
No reproduction or networking permitted without license from IHS

Not for Resale

NFPA Technical Committee Document Proposal Form

Note: All proposals must be received by 5:00 p.m. EST/EDST on the published proposal closing date.

For further information on the standards-making process, please contact Codes and Standards Administration at 617-984-7249. For technical assistance, please call NFPA at 617-770-3000.

FOR OFFICE USE ONLY
Log #: _____
Date Rec'd: _____

Please indicate in which format you wish to receive your ROP/ROC: ☐ **CD ROM** ☐ **paper** ☐ **download**
(Note: In choosing the download option you intend to view the ROP/ROC from our Website. No copy will be sent to you.)

Date 12/18/02 **Name** John B. Smith **Telephone** 617-555-1212
Company _____
Address 9 Seattle St. **City** Seattle **State** WA **Zip** 02255
Please indicate organization represented (if any) Fire Marshals Assn. of North America

1. **a) NFPA Document Title** National Fire Alarm Code
   b) NFPA No. & Edition NFPA 72, 2002 ed. **c) Section/Paragraph** 4.4.7.1.1

2. **Proposal Recommends:** *(check one)* ☐ **new text** ☐ **revised text** ☒ **deleted text**

3. **Proposal.** *(Include proposed new or revised wording, or identification of wording to be deleted.)* Note: Proposed text should be in legislative format, that is, use underscore to denote wording to be inserted (inserted wording) and strike-through to denote wording to be deleted (~~deleted wording~~). Delete exception.

4. **Statement of Problem and Substantiation for Proposal.** Note: State the problem that will be resolved by your recommendation. Give the specific reason for your proposal including copies of tests, research papers, fire experience, etc. If more than 200 words, it may be abstracted for publication. A properly installed and maintained system should be free of ground faults. The occurrence of one or more ground faults should be required to cause a "trouble" signal because it indicates a condition that could contribute to future malfunction of the system. Ground fault protection has been widely available on these systems for years and its cost is negligible. Requiring it on all systems will promote better installations, maintenance and reliability.

5. ☒ **This Proposal is Original Material.** Note: Original material is considered to be the submitter's own idea based on or as a result of his/her own experience, thought, or research and, to the best of his/her knowledge, is not copied from another source.

   ☐ **This Proposal is Not Original Material; Its Source** ***(if known)*** **is as Follows:** _____

Sample

I hereby grant the NFPA all and full rights in copyright to this proposal, and I understand that I acquire no rights in any publication of NFPA in which this proposal in this or another similar or analogous form is used.

Signature ***(Required)*** John B. Smith

PLEASE USE SEPARATE FORM FOR EACH PROPOSAL • NFPA FAX (617) 770-3500

Mail to: Secretary, Standards Council • NFPA • 1 Batterymarch Park • PO Box 9101 • Quincy, MA 02269-9101

Copyright National Fire Protection Association
Provided by IHS under license with NFPA
No reproduction or networking permitted without license from IHS
Not for Resale

NFPA Technical Committee Document Proposal Form

Note: All proposals must be received by 5:00 p.m. EST/EDST on the published proposal closing date.

For further information on the standards-making process, please contact Codes and Standards Administration at 617-984-7249. For technical assistance, please call NFPA at 617-770-3000.

FOR OFFICE USE ONLY
Log #: _____
Date Rec'd: _____

Please indicate in which format you wish to receive your ROP/ROC: ☐ **CD ROM** ☐ **paper** ☐ **download**
(Note: In choosing the download option you intend to view the ROP/ROC from our Website. No copy will be sent to you.)

Date _____ **Name** _____ **Telephone** _____
Company _____
Address _____ **City** _____ **State** _____ **Zip** _____
Please indicate organization represented (if any) _____

1. **a) NFPA Document Title** _____
   b) NFPA No. & Edition _____ **c) Section/Paragraph** _____
2. **Proposal Recommends:** *(check one)* ☐ **new text** ☐ **revised text** ☐ **deleted text**
3. **Proposal.** *(Include proposed new or revised wording, or identification of wording to be deleted.)* Note: Proposed text should be in legislative format, that is, use underscore to denote wording to be inserted (inserted wording) and strike-through to denote wording to be deleted (~~deleted wording~~). _____
4. **Statement of Problem and Substantiation for Proposal.** Note: State the problem that will be resolved by your recommendation. Give the specific reason for your proposal including copies of tests, research papers, fire experience, etc. If more than 200 words, it may be abstracted for publication. _____
5. ☐ **This Proposal is Original Material.** Note: Original material is considered to be the submitter's own idea based on or as a result of his/her own experience, thought, or research and, to the best of his/her knowledge, is not copied from another source.

   ☐ **This Proposal is Not Original Material; Its Source *(if known)* is as Follows:** _____

I hereby grant the NFPA all and full rights in copyright to this proposal, and I understand that I acquire no rights in any publication of NFPA in which this proposal in this or another similar or analogous form is used.

Signature *(Required)* _____

PLEASE USE SEPARATE FORM FOR EACH PROPOSAL • NFPA FAX (617) 770-3500

Mail to: Secretary, Standards Council • NFPA • 1 Batterymarch Park • PO Box 9101 • Quincy, MA 02269-9101

Copyright National Fire Protection Association
Provided by IHS under license with NFPA
No reproduction or networking permitted without license from IHS
Not for Resale