NFPA 1914

Standard for Testing Fire Department Aerial Devices

2002 Edition

NFPA, 1 Batterymarch Park, PO Box 9101, Quincy, MA 02269-9101
An International Codes and Standards Organization

NFPA License Agreement

This document is copyrighted by the National Fire Protection Association (NFPA), 1 Batterymarch Park, Quincy, MA 02269-9101 USA.
All rights reserved.

NFPA grants you a license as follows: The right to download an electronic file of this NFPA document for temporary storage on one computer for purposes of viewing and/or printing one copy of the NFPA document for individual use. Neither the electronic file nor the hard copy print may be reproduced in any way. In addition, the electronic file may not be distributed elsewhere over computer networks or otherwise. The hard copy print may only be used personally or distributed to other employees for their internal use within your organization.

Copyright National Fire Protection Association
Provided by IHS under license with NFPA
No reproduction or networking permitted without license from IHS

Not for Resale

Copyright ©
National Fire Protection Association, Inc.
One Batterymarch Park
Quincy, Massachusetts 02269

IMPORTANT NOTICE ABOUT THIS DOCUMENT

NFPA codes, standards, recommended practices, and guides, of which the document contained herein is one, are developed through a consensus standards development process approved by the American National Standards Institute. This process brings together volunteers representing varied viewpoints and interests to achieve consensus on fire and other safety issues. While the NFPA administers the process and establishes rules to promote fairness in the development of consensus, it does not independently test, evaluate, or verify the accuracy of any information or the soundness of any judgments contained in its codes and standards.

The NFPA disclaims liability for any personal injury, property or other damages of any nature whatsoever, whether special, indirect, consequential or compensatory, directly or indirectly resulting from the publication, use of, or reliance on this document. The NFPA also makes no guaranty or warranty as to the accuracy or completeness of any information published herein.

In issuing and making this document available, the NFPA is not undertaking to render professional or other services for or on behalf of any person or entity. Nor is the NFPA undertaking to perform any duty owed by any person or entity to someone else. Anyone using this document should rely on his or her own independent judgment or, as appropriate, seek the advice of a competent professional in determining the exercise of reasonable care in any given circumstances.

The NFPA has no power, nor does it undertake, to police or enforce compliance with the contents of this document. Nor does the NFPA list, certify, test or inspect products, designs, or installations for compliance with this document. Any certification or other statement of compliance with the requirements of this document shall not be attributable to the NFPA and is solely the responsibility of the certifier or maker of the statement.

NOTICES

All questions or other communications relating to this document and all requests for information on NFPA procedures governing its codes and standards development process, including information on the procedures for requesting Formal Interpretations, for proposing Tentative Interim Amendments, and for proposing revisions to NFPA documents during regular revision cycles, should be sent to NFPA headquarters, addressed to the attention of the Secretary, Standards Council, National Fire Protection Association, 1 Batterymarch Park, P.O. Box 9101, Quincy, MA 02269-9101.

Users of this document should be aware that this document may be amended from time to time through the issuance of Tentative Interim Amendments, and that an official NFPA document at any point in time consists of the current edition of the document together with any Tentative Interim Amendments then in effect. In order to determine whether this document is the current edition and whether it has been amended through the issuance of Tentative Interim Amendments, consult appropriate NFPA publications such as the *National Fire Codes*® Subscription Service, visit the NFPA website at www.nfpa.org, or contact the NFPA at the address listed above.

A statement, written or oral, that is not processed in accordance with Section 5 of the Regulations Governing Committee Projects shall not be considered the official position of NFPA or any of its Committees and shall not be considered to be, nor be relied upon as, a Formal Interpretation.

The NFPA does not take any position with respect to the validity of any patent rights asserted in connection with any items which are mentioned in or are the subject of this document, and the NFPA disclaims liability for the infringement of any patent resulting from the use of or reliance on this document. Users of this document are expressly advised that determination of the validity of any such patent rights, and the risk of infringement of such rights, is entirely their own responsibility.

Users of this document should consult applicable federal, state, and local laws and regulations. NFPA does not, by the publication of this document, intend to urge action that is not in compliance with applicable laws, and this document may not be construed as doing so.

--`,,,-`-`,,`,,`,`,,`---

Copyright National Fire Protection Association
Provided by IHS under license with NFPA
No reproduction or networking permitted without license from IHS
Not for Resale

Licensing Policy

This document is copyrighted by the National Fire Protection Association (NFPA). By making this document available for use and adoption by public authorities and others, the NFPA does not waive any rights in copyright to this document.

1. Adoption by Reference—Public authorities and others are urged to reference this document in laws, ordinances, regulations, administrative orders, or similar instruments. Any deletions, additions, and changes desired by the adopting authority must be noted separately. Those using this method are requested to notify the NFPA (Attention: Secretary, Standards Council) in writing of such use. The term "adoption by reference" means the citing of title and publishing information only.

2. Adoption by Transcription—A. Public authorities with lawmaking or rule-making powers only, upon written notice to the NFPA (Attention: Secretary, Standards Council), will be granted a royalty-free license to print and republish this document in whole or in part, with changes and additions, if any, noted separately, in laws, ordinances, regulations, administrative orders, or similar instruments having the force of law, provided that: (1) due notice of NFPA's copyright is contained in each law and in each copy thereof; and (2) that such printing and republication is limited to numbers sufficient to satisfy the jurisdiction's lawmaking or rule-making process. **B.** Once this NFPA Code or Standard has been adopted into law, all printings of this document by public authorities with lawmaking or rule-making powers or any other persons desiring to reproduce this document or its contents as adopted by the jurisdiction in whole or in part, in any form, upon written request to NFPA (Attention: Secretary, Standards Council), will be granted a nonexclusive license to print, republish, and vend this document in whole or in part, with changes and additions, if any, noted separately, provided that due notice of NFPA's copyright is contained in each copy. Such license shall be granted only upon agreement to pay NFPA a royalty. This royalty is required to provide funds for the research and development necessary to continue the work of NFPA and its volunteers in continually updating and revising NFPA standards. Under certain circumstances, public authorities with lawmaking or rule-making powers may apply for and may receive a special royalty where the public interest will be served thereby.

3. Scope of License Grant—The terms and conditions set forth above do not extend to the index of this document.

(For further explanation, see the Policy Concerning the Adoption, Printing, and Publication of NFPA Documents, which is available upon request from the NFPA.)

Copyright National Fire Protection Association
Provided by IHS under license with NFPA
No reproduction or networking permitted without license from IHS
Not for Resale

Copyright © 2002, National Fire Protection Association, All Rights Reserved

NFPA 1914

Standard for

Testing Fire Department Aerial Devices

2002 Edition

This edition of NFPA 1914, *Standard for Testing Fire Department Aerial Devices,* was prepared by the Technical Committee on Fire Department Apparatus and acted on by NFPA at its May Association Technical Meeting held May 19–23, 2002, in Minneapolis, MN. It was issued by the Standards Council on July 19, 2002, with an effective date of August 8, 2002, and supersedes all previous editions.

This edition of NFPA 1914 was approved as an American National Standard on July 19, 2002.

Origin and Development of NFPA 1914

In 1954, the Fire Department Equipment Committee presented a report entitled *Standard Procedure for Aerial Ladder Testing* (NFPA 193-P) for tentative adoption. In 1955, it received final adoption. This document contained separate tests for wood and metal aerial ladders.

In 1958, new material covering the use, maintenance, and testing of ground ladders was added to the document, and a single procedure for testing both wood and metal aerial ladders was approved.

In 1959, a new section covering specifications for aluminum ground ladders for fire department use was adopted.

In May 1972, a complete revision of the 1959 edition of NFPA 193 was approved. This edition introduced tests for evaluating platforms.

During 1974 and 1975, NFPA 193 was separated into two documents since the conditions of use for ground ladders and aerial ladders were so widely divergent. The new *Recommended Practice for the Maintenance, Care, Testing, and Use of Fire Department Aerial Ladders and Elevating Platforms* was designated as NFPA 1904 and approved in 1975.

In 1980, a complete revision of the document, which revised the document as a standard and renamed it as *Standard for Testing Fire Department Aerial Ladders and Elevating Platforms*, was approved.

The 1988 edition was again a complete revision to add more detail on required inspection, to require nondestructive testing of critical components on a periodic basis, and to include testing for water towers. The document was renumbered NFPA 1914 and renamed *Standard for Testing Fire Department Aerial Devices* to better describe its broader scope.

The 1991 edition added some clarification to the acceptance criteria for weld and other nondestructive testing inspections, revised the requirements for water system tests, and included for testing some additional components of the aerial devices. In addition, references and terminology were changed where necessary to correspond with the new editions of the fire apparatus standards.

The 1997 edition added text to provide repair recommendations when the manufacturer is no longer in business, required that free weights be used in testing, allowed for acoustic emission testing, added requirements for testing secondary operating controls, and added a suggested form for recording the inspection and test results.

The 2002 edition is a reorganization of the document into the new NFPA *Manual of Style* and a rewrite of some sections to better state the intent of the committee. It also revises the qualifications for testing personnel to allow persons certified to Level I NDT to work under the direct supervision of persons certified to Level II or III NDT, added additional requirements for the inspection and testing of tractor drawn components, and better delineated when nondestructive testing is required in addition to the inspections, operational tests, and load tests.

Copyright National Fire Protection Association
Provided by IHS under license with NFPA
No reproduction or networking permitted without license from IHS
Not for Resale

Technical Committee on Fire Department Apparatus

Jeffrey Bowman, *Chair*
Anaheim Fire Department, CA [E]

Kenneth L. Koch, *Secretary*
Sutphen Corporation, OH [M]

William Ballantyne, Hypro Corporation, MN [M]
Rep. Fire Apparatus Manufacturers Association
Robert J. Barraclough, Plano, TX [SE]
Peter F. Darley, W. S. Darley & Company, IL [M]
Rep. National Truck Equipment Association
Donald L. Frazeur, Los Angeles Fire Department, CA [U]
Ron W. French, JDK Management Inc., IL [SE]
Gordon L. Gholson, State of California, CA [U]
Gary Handwerk, Hale Products Inc., PA [M]
Tom Hillenbrand, Underwriters Laboratories Inc., IL [RT]
Calvin S. Kunkle, Purdue University, IN [SE]
W. Kenneth Menke, Fire Service Research Institute, MO [SE]
J. Allen Metheny, Sr., Hartly Volunteer Fire Company, DE [U]
Rep. National Volunteer Fire Council
Thomas J. Mettler, Waterous Company, MN [M]
David A. Ogilvie, Pierce Manufacturing Inc., WI [M]
William C. Peters, City of Jersey City Fire Department, NJ [E]
Jeff Piechura, Northwest Fire District, AZ [E]
W. Michael Pietsch, Insurance Services Office, Inc., TX [I]
Gary R. Pope, Fairfax County Fire/Rescue Department, VA [U]
Carl E. Punkay, Champaign Fire Department, IL [U]
James A. Salmi, American LaFrance Aerials, PA [M]
Alan Saulsbury, Saulsbury Fire Rescue Inc., NY [M]
Thomas A. Stalnaker, Goshen Fire Company, PA [U]
James T. Steffens, The JTS & Association, Inc., FL [I]
Rep. Volunteer Firemen's Insurance Services, Inc.
John M. Terefinko, KME Fire Apparatus, PA [M]
Robert D. Tutterow, Jr., Charlotte Fire Department, NC [U]
William von Zehle, Jr., Wilton Fire Department, CT [E]
Rep. International Association of Fire Chiefs
David White, Fire & Safety Specialists, Inc., TX [SE]
John R. Witt, Safetek Emergency Vehicles Limited, BC [M]

Alternates

James T. Currin, KME Fire Apparatus, VA [M]
(Alt. to J. M. Terefinko)
Ronald L. Ewers, Class I, FL [M]
(Alt. to G. Handwerk)
Jim Johannessen, Underwriters Laboratories Inc., PA [RT]
(Alt. to T. A. Hillenbrand)
Brad C. Kobielusz, Poudre Fire Authority, CO [U]
(Alt. to R. D. Tutterow)
J. Roger Lackore, Pierce Manufacturing Inc., WI [M]
(Alt. to D. A. Ogilvie)
William F. McCombs, Emergency One, Inc., FL [M]
(Alt. to A. Saulsbury)
Thomas H. McCullough II, VFIS Claims Management, Inc., PA [I]
(Alt. to J. T. Steffens)
John McDonald, International Association of Fire Fighters, VA [SE]
(Alt. to W. K. Menke)
Dan W. McKenzie, USDA Forest Service, CA [U]
(Alt. to G. L. Gholson)
Tom Reser, Edwards Manufacturing, OR [M]
(Alt. to W. Ballantyne)
Thomas G. Stites, Sutphen Corporation, OH [M]
(Alt. to K. L. Koch)
Edward F. Straw, Insurance Services Office, Inc., GA [I]
(Alt. to W. M. Pietsch)
Dean David Ulrich, Los Angeles City Fire Department #1, CA [U]
(Alt. to D. L. Frazeur)

Nonvoting

William F. Foley, Orland Fire Protection District, IL
Howard L. McMillen, City of Fort Worth Fire Department, TX
Heinz E. Otte, Mendota Heights, MN

Carl E. Peterson, NFPA Staff Liaison

Committee Scope: This Committee shall have primary responsibility for documents on the design and performance of fire apparatus for use by the fire service.

This list represents the membership at the time the Committee was balloted on the final text of this edition. Since that time, changes in the membership may have occurred. A key to classifications is found at the back of the document.

NOTE: Membership on a committee shall not in and of itself constitute an endorsement of the Association or any document developed by the committee on which the member serves.

Copyright National Fire Protection Association
Provided by IHS under license with NFPA
No reproduction or networking permitted without license from IHS
Not for Resale

Contents

Chapter 1 Administration **1914–** 4
1.1 Scope **1914–** 4
1.2 Purpose **1914–** 4
1.3 Equivalency **1914–** 4

Chapter 2 Referenced Publications **1914–** 4
2.1 General **1914–** 4
2.2 NFPA Publication **1914–** 4
2.3 Other Publications **1914–** 4

Chapter 3 Definitions **1914–** 5
3.1 General **1914–** 5
3.2 Official NFPA Definitions **1914–** 5
3.3 General Definitions **1914–** 5

Chapter 4 Inspection and Test Procedures **1914–** 7
4.1 General **1914–** 7
4.2 Inspection Personnel **1914–** 8
4.3 Third-Party Test Companies **1914–** 8
4.4 Visual Inspection **1914–** 8
4.5 Weld Inspection **1914–** 8
4.6 Bolt and Pin Inspection **1914–** 8
4.7 Nondestructive Testing Procedures **1914–** 8

Chapter 5 Inspecting and Testing Aerial Ladders **1914–** 9
5.1 General **1914–** 9
5.2 Service Records **1914–** 9
5.3 Hydraulic Components **1914–** 9
5.4 Turntable, Torque Box, Suspension, and Tractor-Drawn Components Inspection and Test **1914–** 9
5.5 Stabilizer Inspection and Test **1914–**11
5.6 Aerial Ladder Inspection and Test **1914–**12
5.7 Operating Test **1914–**13
5.8 Load Testing **1914–**14
5.9 Waterway System Test **1914–**15
5.10 Signs **1914–**15
5.11 Hydraulic Fluid **1914–**15
5.12 Records **1914–**15

Chapter 6 Inspecting and Testing Elevating Platforms **1914–**15
6.1 General **1914–**15
6.2 Service Records **1914–**16
6.3 Hydraulic Components **1914–**16
6.4 Turntable and Torque Box Inspection and Test **1914–**16
6.5 Stabilizer Inspection and Test **1914–**16
6.6 Platform and Boom Inspection and Test **1914–**16
6.7 Articulating Boom–Lower Boom Inspection and Test **1914–**16
6.8 Articulating Boom–Upper Boom Inspection and Test **1914–**17
6.9 Telescoping Boom Inspection and Test **1914–**18
6.10 Operational Tests from Lower Controls **1914–**19
6.11 Operational Tests from Platform Controls **1914–**19
6.12 Load Test **1914–**19
6.13 Water System Inspection and Test **1914–**19
6.14 Signs **1914–**20
6.15 Hydraulic Fluid **1914–**20
6.16 Records **1914–**20

Chapter 7 Inspecting and Testing Water Towers **1914–**20
7.1 General **1914–**20
7.2 Service Records **1914–**20
7.3 Hydraulic Components **1914–**20
7.4 Turntable and Torque Box Inspection and Test **1914–**20
7.5 Stabilizer Inspection and Test **1914–**20
7.6 Aerial Ladder Inspection and Test **1914–**20
7.7 Articulating Boom–Lower Boom Inspection and Test **1914–**20
7.8 Articulating Boom–Upper Boom Inspection and Test **1914–**20
7.9 Telescoping Boom Inspection and Test **1914–**21
7.10 Operating Test **1914–**21
7.11 Water System Inspection and Test **1914–**21
7.12 Signs **1914–**21
7.13 Hydraulic Fluid **1914–**21
7.14 Records **1914–**21

Annex A Explanatory Material **1914–**21

Annex B Inspection and Test Form **1914–**23

Annex C Informational References **1914–**26

Index **1914–**27

--`,,,-`-`,,`,,`,`,,`---

Copyright National Fire Protection Association
Provided by IHS under license with NFPA
No reproduction or networking permitted without license from IHS

Not for Resale

NFPA 1914

Standard for

Testing Fire Department Aerial Devices

2002 Edition

NOTICE: An asterisk (*) following the number or letter designating a paragraph indicates that explanatory material on the paragraph can be found in Annex A.

A reference in brackets [ ] following a section or paragraph indicates material that has been extracted from another NFPA document. As an aid to the user, Annex C lists the complete title and edition of the source documents for both mandatory and nonmandatory extracts. Editorial changes to extracted material consist of revising references to an appropriate division in this document or the inclusion of the document number with the division number when the reference is to the original document. Requests for interpretations or revisions of extracted text shall be sent to the appropriate technical committee.

Information on referenced publications can be found in Chapter 2 and Annex C.

Chapter 1 Administration

1.1 Scope. This standard shall apply to the inspection and testing of all fire apparatus, regardless of year of manufacture, that are equipped with an aerial ladder, an elevating platform, or a water tower.

1.2 Purpose. Because aerial devices could become damaged and overstressed, the purpose of this standard shall be to specify the minimum inspection and testing requirements for aerial devices in an effort to ensure at least a minimum degree of safety under continued use.

1.3 Equivalency. Nothing in this standard is intended to prevent the use of systems, methods, or devices of equivalent or superior quality, strength, fire resistance, effectiveness, durability, and safety over those prescribed by this standard. Technical documentation shall be submitted to the authority having jurisdiction to demonstrate equivalency. The system, method, or device shall be approved for the intended purpose by the authority having jurisdiction.

Chapter 2 Referenced Publications

2.1 General. The documents or portions thereof listed in this chapter are referenced within this standard and shall be considered part of the requirements of this document.

2.2 NFPA Publication. National Fire Protection Association, 1 Batterymarch Park, P.O. Box 9101, Quincy, MA 02269-9101.

NFPA 1901, *Standard for Automotive Fire Apparatus,* 1999 edition.

2.3 Other Publications.

2.3.1 ASNT Publication. American Society for Nondestructive Testing, Inc., 1711 Arlingate Lane, Columbus, OH 43228-0518.

CP-189, *Standard for Qualification and Certification of Nondestructive Testing Personnel*, 1995.

2.3.2 ASTM Publications. American Society for Testing and Materials, 100 Barr Harbor Drive, West Conshohocken, PA 19428-2959.

ASTM B 647, *Standard Test Method for Indentation Hardness of Aluminum Alloys by Means of a Webster Hardness Gauge*, 1984 (Reconfirmed 2000).

ASTM B 648, *Standard Test Method for Indentation Hardness of Aluminum Alloys by Means of a Barcol Impressor*, 1978 (Reconfirmed 2000).

ASTM E 6, *Standard Terminology Relating to Methods of Mechanical Testing*, 1999.

ASTM E 10, *Standard Test Method for Brinell Hardness of Metallic Materials*, 2000.

ASTM E 18, *Standard Test Methods for Rockwell Hardness and Rockwell Superficial Hardness of Metallic Materials*, 2000.

ASTM E 92, *Standard Test Method for Vickers Hardness of Metallic Materials*, 1982 (Reconfirmed 1997).

ASTM E 114, *Standard Practice for Ultrasonic Pulse-Echo Straight-Beam Examination by the Contact Method*, 1995.

ASTM E 165, *Standard Test Method for Liquid Penetrant Examination*, 1995.

ASTM E 543, *Standard Practice for Agencies Performing Nondestructive Testing*, 1999.

ASTM E 569, *Standard Practice for Acoustic Emission Monitoring of Structures During Controlled Stimulation*, 1997.

ASTM E 650, *Standard Guide for Mounting Piezoelectric Acoustic Emission Sensors*, 1997.

ASTM E 709, *Standard Guide for Magnetic Particle Examination*, 1995.

ASTM E 797, *Standard Practice for Measuring Thickness by Manual Ultrasonic Pulse-Echo Contact Method*, 1995.

ASTM E 1004, *Standard Practice for Determining Electrical Conductivity Using the Electromagnetic (Eddy Current) Method*, 1999.

ASTM E 1032, *Standard Test Method for Radiographic Examination of Weldments*, 1995.

ASTM E 1220, *Standard Test Method for Visible Penetrant Examination Using the Solvent-Removable Process*, 1999.

ASTM E 1316, *Standard Terminology for Nondestructive Examinations*, 2000.

ASTM E 1418, *Standard Test Method for Visible Penetrant Examination Using the Water-Washable Process*, 1998.

2.3.3 AWS Publications. American Welding Society, 550 N.W. LeJeune Road, Miami, FL 33126.

AWS B1.10, *Guide for the Nondestructive Inspection of Welds*, 1999.

AWS D1.1, *Structural Welding Code — Steel,* 2000.

AWS D1.2, *Structural Welding Code — Aluminum*, 1997.

2.3.4 SAE Publication. Society of Automotive Engineers, 400 Commonwealth Drive, Warrendale, PA 15096.

SAE J959, *Lifting Crane, Wire-Rope Strength Factors*, 1991.

Copyright National Fire Protection Association
Provided by IHS under license with NFPA
No reproduction or networking permitted without license from IHS
Not for Resale

Chapter 3 Definitions

3.1 General. The definitions contained in this chapter shall apply to the terms used in this standard. Where terms are not included, common usage of the terms shall apply.

3.2 Official NFPA Definitions.

3.2.1* Authority Having Jurisdiction (AHJ). The organization, office, or individual responsible for approving equipment, materials, an installation, or a procedure.

3.2.2 Shall. Indicates a mandatory requirement.

3.2.3 Should. Indicates a recommendation or that which is advised but not required.

3.3 General Definitions.

3.3.1 Acoustic Emission Testing. A method of nondestructive testing (NDT) that utilizes acoustic or sound waves.

3.3.2 Aerial Device. An aerial ladder, elevating platform, or water tower that is designed to position personnel, handle materials, provide continuous egress, or discharge water.

3.3.3 Aerial Ladder. A self-supporting, turntable-mounted, power-operated ladder of two or more sections permanently attached to a self-propelled automotive fire apparatus and designed to provide a continuous egress route from an elevated position to the ground. [**1901**:1.7]

3.3.4 Aerial Ladder Sections. The structural members of the aerial ladder consisting of the base and fly sections.

3.3.5 Ambient Temperature. The temperature of the surrounding medium; usually used to refer to the temperature of the air in which a structure is situated or a device operates. [**54:** K.1.1]

3.3.6 American Society for Nondestructive Testing (ASNT). A professional organization that is devoted to promoting knowledge of nondestructive testing.

3.3.7 American Welding Society (AWS). An association that provides codes, guidelines, and standards utilized to evaluate welded structures and components in welded structures.

3.3.8 Ancillary Boom Ladder. A ladder or ladders affixed to a telescoping or articulating boom section.

3.3.9 Articulating Boom. An aerial device consisting of two or more folding boom sections whose extension and retraction modes are accomplished by adjusting the angle of the knuckle joints. [**1901:**1.7]

3.3.10 Auxiliary Hydraulic Power. A small gasoline engine, diesel engine, or electric motor-driven hydraulic pump used to operate an aerial device in an emergency or in lieu of the main hydraulic system. [**1901:**1.7]

3.3.11 Base Rail. The lower chord (rail) of an aerial ladder to which rungs and reinforcements are attached. [**1901:**1.7]

3.3.12 Base Section. The first or bottom section of an aerial device. [**1901:**1.7]

3.3.13 Boom. An assembled section of an aerial device. The boom construction can be of the stressed skin box beam type, the trussed-lattice-type, or the open "U" truss-type design. [**1901:**1.7]

3.3.14 Boom Boost Cylinders. The hydraulic cylinders located on the upper boom of an articulating boom aerial device that help lift the upper boom from the lower boom.

3.3.15 Boom Support. A structural component that is attached to the chassis frame and that is used to support the aerial device when it is in the cradled position.

3.3.16 Bow. The distance that the end of an aerial ladder or boom deviates from a straight line extension of the base section.

3.3.17 Cable. A wire rope used to transmit forces from one component to another for the purpose of extending or retracting an aerial device. [**1901:**1.7]

3.3.18 Cable Separation Guide. The mechanism that aligns and separates the cable when it is wound on the drum of an aerial ladder's extension winch.

3.3.19 Chassis. The basic operating motor vehicle including the engine, frame, and other essential structural and mechanical parts, but exclusive of the body and all appurtenances for the accommodation of driver, property, or passengers, appliances, or equipment related to other than control. Common usage might, but need not, include a cab (or cowl). [**1901:**1.7]

3.3.20 Collector Rings. An assembly of slip rings for transferring electrical energy from a stationary to a rotating member. [**70:**675.2]

3.3.21 Cylinder Links. The mechanisms that can be used in connecting an articulating boom to the end of the upper elevating cylinders or to the lower and upper booms.

3.3.22 Defect. A discontinuity in a part or a failure to function that interferes with the service or reliability for which the part was intended. [**1901:**1.7]

3.3.23 Deflection. The deviation from a straight course or fixed direction.

3.3.24 Discontinuity. A change in the normal, physical structure of a material that can affect its serviceability.

3.3.25 Diverter Valve. A valve that, when actuated, diverts hydraulic fluid from one function to another or from one hydraulic system to another; in aerial devices, it is one valve that diverts hydraulic fluid from the stabilizers when the aerial device is in use and vice versa.

3.3.26 Drift. A time-dependent movement away from an established position.

3.3.27 Drip. A flow of liquid that lacks sufficient quantity or pressure to form a continuous stream.

3.3.28 Elevating Platform. A self-supporting, turntable-mounted device consisting of a personnel-carrying platform attached to the uppermost boom of a series of power-operated booms that articulate, telescope, or both; and that are sometimes arranged to provide the continuous egress capabilities of an aerial ladder.

3.3.29 Elevation Cylinder. The hydraulic components consisting of a cylinder barrel, cylinder rod, and related hardware that are used to vary the angle of the ladder or booms.

3.3.30 Elevation Indicator. An instrument on an aerial device that shows the angle of elevation of the aerial ladder or boom.

3.3.31 Elevation Lock. A manual- or positive-locking device (i.e., holding valve) that can be actuated to maintain indefi-

--`,,,-`-`,,`,,`,`,,`---

Copyright National Fire Protection Association
Provided by IHS under license with NFPA
No reproduction or networking permitted without license from IHS
Not for Resale

nitely a desired angle or elevation without dependence upon engine power.

3.3.32 Emergency Hand-Crank Control. An auxiliary or supplemental control with which the operator can manually operate select functions of the aerial device.

3.3.33 Extension Cylinder. The hydraulic components consisting of a cylinder barrel, cylinder rod, and related hardware that are used to vary the length of extension of a telescoping aerial device.

3.3.34 Extension Indicator. A device on an aerial ladder or extensible boom aerial device that indicates the number of feet that the device has been extended.

3.3.35 Extension Sheave. A pulley through which an extension cable operates.

3.3.36 Fastener. A mechanical device, such as a rivet, bolt, screw, or pin, that is used to hold two or more components together securely.

3.3.37 Ferromagnetic Materials. Materials that can be magnetized and strongly attracted to a magnetic field such as iron, steel, cobalt, and nickel.

3.3.38 Fly Locks. See Ladder Locks.

3.3.39 Fly Section. Any section of an aerial telescoping device beyond the base section. [**1901:**1.7]

3.3.40 Fracture. A type of defect found in welds that has a large length-to-width ratio and travels through or adjacent to the metal grain boundaries; usually, this type of defect is referred to as a crack.

3.3.41 Hinge Pins. Pins that are used at either the swivel or point of articulation of an aerial device.

3.3.42 Holding Valve. A one-way valve that maintains hydraulic pressure in a cylinder until it is activated to release.

3.3.43 Inspect. To determine the condition or operation of a component(s) by comparing its physical, mechanical, and/or electrical characteristics with established standards, recommendations, and requirements through examination by sight, sound, or feel. [**1915:**1.3]

3.3.44* Instability. A condition of a mobile unit in which the sum of the moments tending to overturn the unit exceeds the sum of the moments tending to resist overturning. [**1901:**1.7]

3.3.45 Interlock. A device or arrangement by means of which the functioning of one part is controlled by the functioning of another. [**1901:**1.7]

3.3.46 Ironing. A term used for the damage caused to the bottom of a base rail by misalignment or malfunction of the rollers, which causes wear or indentation of the base rail material.

3.3.47 Knuckle. A point of connection between the upper and lower booms of an articulating device; the point at which lower and upper booms are hinged together. [**1901:**1.7]

3.3.48 Ladder Cradle. A structural component that supports an aerial ladder when it is bedded.

3.3.49 Ladder Locks. The mechanical locks or pawls that prevent movement of the sections of an aerial device when the power is shut off or in the event of loss of pressure in hydraulic circuits.

3.3.50 Leak. A continuous stream of liquid escaping from a hose, pipe, coupling, connection, or other confining structure at any point where the escape should not occur.

3.3.51 Leveling Linkages. The components and controls for achieving a level position of the platform.

3.3.52 Liquid Penetrant Inspection. A nondestructive inspection method used to locate and determine the severity of surface discontinuities in materials, based on the ability of a liquid to penetrate into small openings, such as cracks.

3.3.53 Load Limit Indicator. A load indicator or an instruction plate visible at the operator's position that shows the recommended safe load at any condition of an aerial device's elevation and extension. [**1901:**1.7]

3.3.54 Magnetic Particle Inspection. A nondestructive inspection method used to locate discontinuities in ferromagnetic materials by magnetizing the material and then applying an iron powder to mark and interpret the patterns that form.

3.3.55 Mobile Unit. A combination of an aerial device, its vehicle, and related equipment.

3.3.56 Neutral Position. The position of operating controls when the controls are not engaged.

3.3.57 Nondestructive Testing (NDT). One of several methods used to inspect a structural component without physically altering or damaging the materials.

3.3.58 Operator. A person qualified to operate an aerial device.

3.3.59 Override. A system or device used to neutralize a given action or motion. [**1901:**1.7]

3.3.60 Platform. An assembly consisting of the support structure, floor, railings, and operator's secondary controls that is attached to the tip of a boom or an aerial ladder for carrying personnel and equipment.

3.3.61 Pneumatic Lines. The lines that supply air, which is normally for a breathing air system or for pneumatic power tools, to a platform or to the tip of an aerial ladder.

3.3.62 Proper(ly). In accordance with the manufacturer's specifications or as recommended by the manufacturer.

3.3.63 PTO. Power takeoff. [**1901:**1.7]

3.3.64 Qualified Person. A person who, by possession of a recognized degree, certificate, professional standing, or skill, and who, by knowledge, training, and experience, has demonstrated the ability to deal with problems relating to the subject matter, the work, or the project. [**1500:**1.5]

3.3.65 Radiography. A nondestructive inspection method that uses X rays, nuclear radiation, or both to detect discontinuities in material and to present their images on a recording medium.

3.3.66 Rated Capacity. The total amount of weight of all personnel and equipment that can be supported at the outermost rung of an aerial ladder or on the platform of an elevating platform with the waterway uncharged. [**1901:**1.7]

3.3.67* Rated Vertical Height. The vertical distance measured by a plumb line from the maximum elevation of the aerial device allowed by the manufacturer to the ground.

3.3.68 Relief Valve. A device that allows the bypass of fluids to limit the pressure in a system.

Copyright National Fire Protection Association
Provided by IHS under license with NFPA
No reproduction or networking permitted without license from IHS
Not for Resale

3.3.69 Rotation Gear. The main gear of an aerial device that is used for the rotation of the turntable.

3.3.70 Rotation Gear Reduction Box. The mechanism of an aerial device that transfers hydraulic or electric power to the rotation gear, creating the torque necessary to rotate the turntable.

3.3.71 Rotation Lock. A strong friction or other positive-locking device (e.g., holding valve) that retains the turntable in any desired position.

3.3.72 Rung Cap Casting. A casting that can be riveted to the outside of the base rail over the ends of each rung on an aerial ladder.

3.3.73 Safety Stop Mechanism. A device that is located on the aerial device and prevents raising the elevating platform booms or sections beyond safe, operating, horizontal or vertical angles.

3.3.74 Slide Blocks. Blocks made of a variety of materials (e.g., brass, nylatron) that act as spacing devices, wear strips, or wear pads.

3.3.75 Spirit Level. An indicating device that is affixed to a turntable or truck body and is used to verify the levelness of a turntable prior to operating an aerial device.

3.3.76 Stabilizer. A device integral with or separately attached to the chassis of an aerial fire apparatus that is used to increase the moments tending to resist overturning the apparatus.

3.3.77 Stabilizer Pad. A plate inserted beneath a stabilizer shoe to give greater surface bearing area. [**1901:**1.7]

3.3.78 Stabilizer Shoe. A permanently mounted shoe on a stabilizer to provide a ground surface area. [**1901:**1.7]

3.3.79 Stressed-Skin-Type Boom Section. A boom framework that is fabricated by the welding of metal into full box sections with internal torsional members.

3.3.80 Telescopic. Extended or retracted by sliding of the overlapping sections.

3.3.81 Test. To verify serviceability by measuring the mechanical, pneumatic, hydraulic, or electrical characteristics of an item and comparing those characteristics with prescribed standards.

3.3.82 Top Rail. The top chord (rail) of an aerial ladder to which reinforcements are attached. [**1901:**1.7]

3.3.83* Torque Box. A structural component placed between the turntable and the chassis of an aerial device to absorb the stresses of operation.

3.3.84 Torque Value. A measure of tightness or the amount of stress that is put on a fastening device (i.e., bolt) to secure it properly.

3.3.85 Trussed-Lattice-Type Boom Section. An open truss boom framework with vertical and diagonal braces that are fastened to horizontal beams of the frame.

3.3.86* Turntable. A structural component that connects the aerial device to the chassis and stabilization system through a rotating bearing that permits 360-degree continuous rotation of the aerial device.

3.3.87 Turntable Alignment Indicator. An indicator that facilitates alignment of the aerial device with the boom support for bedding purposes.

3.3.88 Twist. The degree of rotational movement from a given position.

3.3.89 Ultrasonic Inspection. A nondestructive method of inspection in which high-frequency vibrations are injected through the surface of the test material and bounced back to their source from the opposite surface; if a flaw exists, signals return in a different pattern, revealing the location and extent of the flaw.

3.3.90 Visual Inspection. Inspection by the eye without recourse to any optical devices, except prescription eyeglasses.

3.3.91 Water Tower. An aerial device consisting of permanently mounted power-operated booms and a waterway designed to supply a large capacity mobile elevated water stream. The booms can be of articulating design or telescoping design. [**1901:**1.7]

3.3.92 Weldment. A structure that is formed by the welding together of several components.

Chapter 4 Inspection and Test Procedures

4.1 General.

4.1.1 All inspections and tests specified in this standard except those specifically designated as nondestructive tests (NDT) shall be conducted at the following times:

(1) At least annually
(2) After major repairs or overhaul
(3) Following the use of the aerial device when the aerial device could have been subjected to unusual operating conditions of stress or load
(4) When there is reason to believe that usage has exceeded the manufacturer's recommended aerial device operating procedures

4.1.2* The inspections and tests specified in this standard as nondestructive tests (NDT) shall be conducted at the following times:

(1) At least every five years
(2) Whenever visual inspection or load testing indicates a potential problem
(3) When there is a desire to further confirm continued operational safety

4.1.3 If the aerial device is involved in a situation that produces any structural damage, or if the inspections and tests that are required in this standard reveal any problems that affect the structural integrity of the aerial device, the aerial device shall be placed out of service.

4.1.3.1* The aerial device shall be repaired to an acceptance level in accordance with the manufacturer's standard.

4.1.3.2 If the manufacturer is no longer in business and, therefore, cannot be consulted with regard to repair of the aerial device, the repairs shall be performed by a repair facility that is acceptable to the authority having jurisdiction.

4.1.3.3 The aerial device shall be tested to the full operational load and NDT of this standard before it is placed back in service.

4.1.4* The inspections and tests specified herein shall be the minimum service test requirements for all aerial devices.

--`,,,-`-`,,`,,`,`,,`---

Copyright National Fire Protection Association
Provided by IHS under license with NFPA
No reproduction or networking permitted without license from IHS
Not for Resale

4.1.4.1 Since each manufacturer's unit will be somewhat different, specific attention shall be given to the manufacturer's instructions concerning periodic maintenance and inspection checks.

4.1.4.2 The testing personnel shall have written documentation identifying the aerial device manufacturer's operating procedures, component performance specifications, and tolerances.

4.1.5* Only qualified persons, acceptable to the authority having jurisdiction, shall be allowed to operate the apparatus during testing procedures.

4.2 Inspection Personnel.

4.2.1 The inspections and tests outlined in this standard shall be performed by qualified persons, a third-party testing company, or the manufacturer as determined acceptable by the authority having jurisdiction.

4.2.2 The person actually performing the nondestructive test work shall be certified as at least a Level II NDT technician in the test method used, as specified in ASNT CP-189, *Standard for Qualification and Certification of Nondestructive Testing Personnel.*

4.2.3 Trainees and personnel certified to Level I in the test method used shall be permitted to conduct the nondestructive tests so long as they work under the direct and immediate supervision of either a Level II or an ASNT Level III technician holding current certification in the same test method.

4.3 Third-Party Test Companies. If a third-party test company is employed to do NDT, that company shall comply with ASTM E 543, *Standard Practice for Agencies Performing Nondestructive Testing.*

4.4 Visual Inspection. A visual inspection shall be performed in accordance with the requirements of Chapters 5, 6, or 7, depending on the aerial device.

4.4.1 The visual inspection shall be conducted prior to any operational or load testing and shall be carried out in a systematic sequence with proper attention to detail.

4.4.2 This visual inspection shall be for the detection of any visible defects, damage, or improperly secured parts.

4.5 Weld Inspection.

4.5.1 When the inspections as required by 4.1.1 are performed, all accessible structural welds shall be visually inspected for fractures.

4.5.2 When the nondestructive testing as required by 4.1.2 is performed, all accessible structural welds shall be inspected by technicians who meet the criteria of Section 4.2 for the test methods used.

4.5.3 Welds on Steel.

4.5.3.1 All accessible structural welds on steel shall be inspected in accordance with the applicable provisions of AWS D1.1, *Structural Welding Code — Steel.*

4.5.3.2 All structural welds shall comply with the weld quality as defined in the visual inspection acceptance criteria of AWS D1.1, *Structural Welding Code — Steel.*

4.5.4 Welds on Aluminum.

4.5.4.1 All accessible structural welds on aluminum shall be inspected in accordance with the applicable provisions of AWS D1.2, *Structural Welding Code — Aluminum.*

4.5.4.2 All structural welds shall comply with the weld quality as defined in the visual inspection acceptance criteria of AWS D1.2, *Structural Welding Code — Aluminum.*

4.5.5 The application of a particular nondestructive weld inspection technique shall be as recommended by AWS B1.10, *Guide for the Nondestructive Inspection of Welds.*

4.6 Bolt and Pin Inspection. Bolts and pins that are subjected to ultrasonic testing shall contain no ultrasonic cathode ray tube (CRT) indications that can be interpreted as cracks or elongated material.

4.7 Nondestructive Testing Procedures.

4.7.1 All test procedures shall be consistent with ASTM E 1316, *Standard Terminology for Nondestructive Examinations.*

4.7.2 All ultrasonic inspections shall be conducted in accordance with the following standards:

(1) ASTM E 114, *Standard Practice for Ultrasonic Pulse-Echo Straight-Beam Examination by the Contact Method*
(2) ASTM E 797, *Standard Practice for Measuring Thickness by Manual Ultrasonic Pulse-Echo Contact Method*

4.7.3 All magnetic particle inspections shall be conducted in accordance with ASTM E 709, *Standard Guide for Magnetic Particle Examination.*

4.7.4 All liquid penetrant inspections shall be conducted in accordance with the following standards:

(1) ASTM E 165, *Standard Test Method for Liquid Penetrant Examination*
(2) ASTM E 1220, *Standard Test Method for Visible Penetrant Examination Using the Solvent-Removable Process*
(3) ASTM E 1418, *Standard Test Method for Visible Penetrant Examination Using the Water-Washable Process*

4.7.5 All radiographic inspection shall be conducted in accordance with ASTM E 1032, *Standard Test Method for Radiographic Examination of Weldments.*

4.7.6 All hardness readings shall be conducted in accordance with the following standards:

(1) ASTM B 647, *Standard Test Method for Indentation Hardness of Aluminum Alloys by Means of a Webster Hardness Gauge*
(2) ASTM B 648, *Standard Test Method for Indentation Hardness of Aluminum Alloys by Means of a Barcol Impressor*
(3) ASTM E 6, *Standard Terminology Relating to Methods of Mechanical Testing*
(4) ASTM E 10, *Standard Test Method for Brinell Hardness of Metallic Materials*
(5) ASTM E 18, *Standard Test Methods for Rockwell Hardness and Rockwell Superficial Hardness of Metallic Materials*
(6) ASTM E 92, *Standard Test Method for Vickers Hardness of Metallic Materials*

4.7.7 All acoustic emission inspections shall be conducted in accordance with the following standards:

(1) ASTM E 569, *Standard Practice for Acoustic Emission Monitoring of Structures During Controlled Stimulation*
(2) ASTM E 650, *Standard Guide for Mounting Piezoelectric Acoustic Emission Sensors*

4.7.8 All eddy current inspections shall be conducted in accordance with ASTM E 1004, *Standard Practice for Determining Electrical Conductivity Using the Electromagnetic (Eddy Current) Method.*

Copyright National Fire Protection Association
Provided by IHS under license with NFPA
No reproduction or networking permitted without license from IHS
Not for Resale

Chapter 5 Inspecting and Testing Aerial Ladders

5.1 General.

5.1.1 The tests specified in this chapter shall apply only to metal aerial ladders.

5.1.2 In addition to the manufacturer's recommendations for annual inspections and tests, the inspections and tests detailed in Sections 5.2 through 5.11 shall be performed.

5.1.3 An inspection preceded by a plus sign (+) indicates that an appropriate nondestructive test (NDT) shall be conducted as required by 4.1.2.

5.2 Service Records. The aerial ladder's service records shall be checked for any reports that indicate defective conditions.

5.3 Hydraulic Components. Hydraulic components shall show no signs of hydraulic fluid leakage.

5.3.1 A component shall be considered leaking if hydraulic fluid (oil) droplets are forming on the component.

5.3.2 A film of hydraulic fluid on the component shall not be considered severe enough to categorize the component as leaking.

5.4 Turntable, Torque Box, Suspension, and Tractor-Drawn Components Inspection and Test. The turntable, torque box, suspension components, and tractor-drawn components, where applicable, shall be inspected on all aerial ladders in accordance with 5.4.1 through 5.4.29.

5.4.1 Rotation-Bearing Mounting Bolts. The rotation-bearing mounting bolts shall be inspected as follows:

(1) Inspect all accessible bolts for proper grade and installation as specified by the apparatus manufacturer.
(2) Using a properly calibrated torque wrench, verify that the bolt torque on all accessible bolts meets the apparatus manufacturer's specifications.
(3) (+) Inspect all accessible bolts for internal flaws.

5.4.2 Torque Box Mounting to Frame.

5.4.2.1 If the torque box is bolted to the frame, the torque box mounting to the frame shall be inspected as follows:

(1) Inspect all accessible bolts for proper grade and installation as specified by the apparatus manufacturer.
(2) Using a properly calibrated torque wrench, verify that the torque on all accessible bolts meets the apparatus manufacturer's specifications.
(3) (+) Inspect all bolts for internal flaws.

5.4.2.2 If the torque box is welded to the frame, the torque box mounting to the frame shall be inspected as follows:

(1) Visually inspect all accessible attaching welds for fractures.
(2) (+) Inspect all accessible attaching welds.

5.4.3 Tractor-Drawn Components Mounting to Frame.

5.4.3.1 If tractor-drawn components are bolted to the frame, the mounting of the tractor-drawn components to the frame shall be inspected as follows:

(1) Inspect all accessible bolts for proper grade and installation as specified by the apparatus manufacturer.
(2) Using a properly calibrated torque wrench, verify that the torque on all accessible bolts meets the apparatus manufacturer's specifications.
(3) (+) Inspect all bolts for internal flaws.

5.4.3.2 If tractor-drawn components are welded to the frame, the mounting of the tractor-drawn components to the frame shall be inspected as follows:

(1) Visually inspect all accessible attaching welds for fractures.
(2) (+) Inspect all accessible attaching welds.

5.4.4 Suspension System.

5.4.4.1 If the suspension system components are bolted to the frame, the mounting of the suspension system components to the frame shall be inspected as follows:

(1) Inspect all accessible bolts for proper grade and installation as specified by the apparatus manufacturer.
(2) Using a properly calibrated torque wrench, verify that the torque on all accessible bolts meets the apparatus manufacturer's specifications.
(3) (+) Inspect all bolts for internal flaws.

5.4.4.2 If the suspension system components are welded to the frame, the mounting of the suspension system components to the frame shall be inspected as follows:

(1) Visually inspect all accessible attaching welds for fractures.
(2) (+) Inspect all accessible attaching welds.

5.4.5 Rotation Gear and Bearing. The rotation gear and bearing shall be inspected as follows:

(1) Inspect the rotation gear for missing or damaged teeth, pinion-to-gear alignment, proper lubrication, and backlash.
(2) Inspect the bearing clearance.

5.4.6 Rotation Gear Reduction Box Mounting.

5.4.6.1 If the rotation gear reduction box is bolted to the turntable, the rotation gear reduction box mounting shall be inspected as follows:

(1) Inspect all bolts for proper grade and installation as specified by the apparatus manufacturer.
(2) Using a calibrated torque wrench, verify that the torque on all bolts meets the apparatus manufacturer's specifications.
(3) (+) Inspect all bolts for internal flaws.

5.4.6.2 If the rotation gear reduction box is welded to the turntable, the rotation gear reduction box mounting shall be inspected as follows:

(1) Visually inspect all of the accessible weldments for defects and all of the welds for fractures.
(2) (+) Inspect all reduction box attaching welds.

5.4.7 Structural Components. The structural components shall be inspected as follows:

(1) Visually inspect all of the accessible structural weldments for defects and all of the welds for fractures.
(2) (+) Inspect all accessible structural component welds.

5.4.8 Rotation Hydraulic Swivel. The rotation hydraulic swivel shall be inspected for external hydraulic fluid leakage.

5.4.9 Hydraulic Lines and Hose. All hydraulic lines and hose shall be inspected for kinks, cuts and abrasions, and hydraulic fluid leakage at connectors and fittings.

Copyright National Fire Protection Association
Provided by IHS under license with NFPA
No reproduction or networking permitted without license from IHS
Not for Resale

5.4.10 Elevation, Extension, and Rotation Lock(s). The elevation, extension, and rotation lock(s) shall be inspected as follows:

(1) Inspect the manual valve on the elevation, extension, and rotation lock(s) for external hydraulic fluid leakage.
(2) Verify by visual inspection that the manual elevation lock operates properly by engaging the lock and then attempting to raise and lower the ladder while the main hydraulic system is operating.
(3) Verify by visual inspection that the manual extension lock operates properly by engaging the lock and then attempting to extend or retract the ladder while the main hydraulic system is operating.
(4) Verify by visual inspection that the manual rotation lock operates properly by engaging the lock and attempting to rotate the turntable clockwise and counterclockwise while the main hydraulic system is operating.

5.4.11 Power Takeoff. The power takeoff shall be inspected as follows:

(1) Inspect the power takeoff for external hydraulic fluid leakage.
(2) Verify that the power takeoff engages and disengages properly.

5.4.12 Hydraulic Pump. The hydraulic pump shall be inspected for external hydraulic fluid leakage.

5.4.13 Collector Rings. The collector rings shall be inspected as follows:

(1) If the collector rings are accessible, inspect them for foreign material buildup.
(2) If the collector ring terminals are accessible, inspect them for damage.
(3) Conduct tests to ensure the proper operation of the collector rings by rotating the aerial device while electric-powered devices are in operation.
(4) If applicable, check for indications of moisture in the electrical chamber by visually inspecting the desiccant moisture indicators.

5.4.14 Elevation Cylinder Anchor Ears and Plates.

5.4.14.1 The elevation cylinder anchor ears and plates shall be inspected as follows:

(1) Visually inspect the elevation cylinder anchor ears and plates for defects and the attaching welds for fractures.
(2) (+) Inspect the elevation cylinder anchor ears and plate-attaching welds.

5.4.14.2 If the elevation cylinder anchor is bolted, it shall be further inspected as follows:

(1) Inspect all accessible bolts for proper grade and installation as specified by the apparatus manufacturer.
(2) Using a properly calibrated torque wrench, verify that the bolt torque on all accessible bolts meets the manufacturer's specification.
(3) (+) Inspect all accessible bolts for internal flaws.

5.4.15 Elevation Cylinder Pins. The elevation cylinder pins shall be inspected as follows:

(1) Inspect the cylinder pins for proper installation, alignment, lubrication, operation, and retention.
(2) (+) Inspect cylinder pins for internal flaws.

5.4.16 Elevation Cylinders.

5.4.16.1 The elevation cylinders shall be inspected as follows:

(1) Inspect the cylinder rods for pitting, scoring, and other defects.
(2) Inspect the cylinder rod-to-barrel seal and the end gland seal for external hydraulic fluid leakage that exceeds the manufacturer's specifications.

5.4.16.2* The elevation cylinders shall be subjected to a drift test as follows:

(1) With the hydraulic fluid at ambient temperature, place the aerial device at 60-degrees elevation at full extension.
(2) Mark the cylinder position.
(3) Close the manually operated locking valves, and allow the device to stand for 1 hour with the engine off.
(4) Measure the drift and verify that the results do not exceed the manufacturer's specifications for allowable cylinder drift.

5.4.17 Holding Valves on Elevation Cylinders. The holding valves on the elevation cylinders shall be inspected for external hydraulic fluid leakage.

5.4.18 Operating Controls. The operating controls shall be inspected as follows:

(1) Inspect the operating controls to ensure control handles are not damaged or missing, functions are identified, operating instructions and warnings are posted, and there is no hydraulic fluid leakage.
(2) Verify that the controls operate smoothly, return to neutral position when released, and do not bind during operation.
(3) If interlocks have been provided or are required to prevent unintentional operation of the aerial device, verify that the interlocks or locking devices are operating properly.

5.4.19 Load Limit Indicators. The load limit indicators shall be inspected for proper operation and legibility.

5.4.20 Emergency Hand-Crank Controls. The emergency hand-crank controls shall be inspected for proper operation.

5.4.21 Auxiliary Hydraulic Power. The auxiliary hydraulic power shall be inspected for proper operation.

5.4.22 Turntable Alignment Indicator. The presence of a turntable alignment indicator shall be verified.

5.4.23 Throttle Control.

5.4.23.1 The throttle control shall be inspected for proper operation.

5.4.23.2 The operating speed of the engine shall be measured using a tachometer or a revolution counter and shall be checked against the manufacturer's specifications.

5.4.24 Communication System. The communication system shall be inspected for proper installation and operation.

5.4.25 Relief Hydraulic Pressure. The main hydraulic pump relief pressure and compensator pressure shall be tested to determine that they do not exceed the manufacturer's specifications.

5.4.26 Unit Main Frame. The unit main frame shall be inspected as follows:

Copyright National Fire Protection Association
Provided by IHS under license with NFPA
No reproduction or networking permitted without license from IHS
Not for Resale

(1) Visually inspect the main frame for any cracks, bends, dents, twists, or other weldment defects.
(2) Visually inspect any welds for fractures.
(3) (+) Inspect all main frame welds.

5.4.27 Transmission/Aerial Device Interlocks. If interlocks have been provided that prevent operation of the aerial device until both the parking brakes have been set and the transmission has been positioned properly, the interlocks shall be inspected to verify they are operating properly.

5.4.28 Engine Speed Interlocks. If interlocks have been provided that allow operation of the engine speed control only after both the parking brakes have been set and the transmission has been positioned properly, the interlocks shall be inspected to verify they are operating properly.

5.4.29 Breathing Air Systems. If a breathing air system is provided, the system shall be inspected as follows:

(1) Verify that the breathing air system — including the integrity of the air cylinder mounting, the regulator, and the air lines from the air cylinder(s) to the top of the aerial device — is properly installed.
(2) Verify that all the component parts of the system are present and in serviceable condition.
(3) Visually inspect the air cylinder mounting brackets for defects and the welds for fractures.
(4) (+) Inspect all welds on air cylinder mounting brackets.
(5) Check that the air pressure regulator is set at the apparatus manufacturer's recommended pressure.

5.5 Stabilizer Inspection and Test. The stabilizer components, where applicable, shall be inspected on all aerial ladder apparatus in accordance with 5.5.1 through 5.5.16.

5.5.1 Stabilizer Structural Components. The stabilizer structural components shall be inspected as follows:

(1) Visually inspect all of the stabilizer components for defects and all of the welds for fractures.
(2) (+) Inspect all stabilizer structural component welds.

5.5.2 Stabilizer Pads. The stabilizer pads shall be inspected to verify that they are present, are of proper construction, and are in serviceable condition.

5.5.3 Stabilizer Mounting to Frame or Torque Box.

5.5.3.1 The stabilizer mounting to the frame or torque box attachment shall be visually inspected for defects such as dents and bends.

5.5.3.2 If the stabilizer mounting to the frame or torque box is welded, it shall be further inspected as follows:

(1) Visually inspect the stabilizer to frame or torque box mounting for weld cracks.
(2) (+) Inspect the stabilizer to frame or torque box mounting welds.

5.5.3.3 If the stabilizer mounting to the frame or torque box is bolted, it shall be further inspected as follows:

(1) Inspect all bolts for proper fastener grade and installation as specified by the apparatus manufacturer.
(2) Using a properly calibrated torque wrench, verify that the torque on all bolts meets the apparatus manufacturer's specifications.
(3) (+) Inspect all bolts for internal flaws.

5.5.4 Hydraulic Lines and Hose in Stabilizer System. The hydraulic lines and hoses in the stabilizer system shall be inspected for kinks, cuts and abrasions, and leakage at connectors and fittings.

5.5.5 Stabilizer Interlock System. The stabilizer interlock system shall be inspected to verify that it is operating properly.

5.5.6 Stabilizer Warning Device. The stabilizer warning device shall be inspected to verify that it is operating properly.

5.5.7 Stabilizer Extension Cylinder Pins and Hinge Pins. The stabilizer extension cylinder pins and hinge pins shall be inspected as follows:

(1) Inspect all stabilizer cylinder pins and hinge pins for proper installation, lubrication, operation, and retention.
(2) (+) Inspect all stabilizer pins and hinge pins for internal flaws.

5.5.8 Stabilizer Extension Cylinders.

5.5.8.1 The stabilizer extension cylinders shall be inspected as follows:

(1) Inspect the stabilizer extension cylinder rods for pitting, scoring, and other defects.
(2) Inspect the cylinder rod-to-barrel seals and the end gland seals for external hydraulic fluid leakage that exceeds the manufacturer's specifications.

5.5.8.2 The stabilizer extension cylinder shall be subjected to a drift test as follows:

(1) With the hydraulic fluid at ambient temperature, properly set the stabilizer's cylinders.
(2) Mark the cylinder position.
(3) Measure the drift after 1 hour with the engine off.
(4) Verify that the results do not exceed the manufacturer's specification for allowable stabilizer cylinder drift.

5.5.9 Holding Valves on Extension Cylinders. The holding valves on extension cylinders shall be inspected for external leakage of hydraulic fluid.

5.5.10 Operating Controls. The operating controls shall be inspected as follows:

(1) Inspect the operating controls to ensure control handles are not damaged or missing, functions are identified, operating instructions and warnings are posted, and there is no hydraulic fluid leakage.
(2) Verify that the controls operate smoothly, return to the neutral position when released, and do not bind during operation.
(3) If interlocks have been provided or are required to prevent unintentional operation of the aerial device, verify that the interlocks or locking devices are operating properly.

5.5.11 Leveling Indicator. If a leveling indicator(s) is provided to aid the operator in leveling the apparatus, the accuracy and legibility of the leveling indicator shall be checked.

5.5.12 Diverter Valve. The diverter valve shall be inspected for external hydraulic fluid leakage.

5.5.13 Positive Stops. The mechanical stabilizers shall be inspected for proper operation of the positive stops that prevent overextension.

5.5.14 Stabilizer Deployment. If the stabilizer system is operated hydraulically, the system shall be inspected to verify that it

Copyright National Fire Protection Association
Provided by IHS under license with NFPA
No reproduction or networking permitted without license from IHS
Not for Resale

can be deployed within the time frame designated by the aerial device manufacturer.

5.5.15 Manual Spring Locks. The stabilizer manual spring locks shall be inspected for proper condition and operation.

5.5.16 Tractor Spring Lockout Device. If the aerial ladder is tractor drawn, the spring lockout device shall be inspected for any discontinuities and for proper operation.

5.6 Aerial Ladder Inspection and Test. The aerial ladder shall be inspected in accordance with 5.6.1 through 5.6.30.

5.6.1 Structural Modifications, Improper Repairs, or Added Weight.

5.6.1.1 The aerial ladder shall be inspected for structural modifications or improper repairs.

5.6.1.2 The aerial ladder shall be inspected to determine that no extra equipment has been added to the aerial ladder without subtracting the weight of such equipment from the rated capacity.

5.6.1.3 Details of any structural modifications, improper repairs, or added weight shall be contained in the record required by Section 5.12.

5.6.2 Aerial Ladder Weldments. All aerial ladder weldments shall be inspected as follows:

(1) Visually inspect all of the accessible aerial ladder weldments for defects and all of the welds for fractures.
(2) (+) Inspect all accessible welds on the ladder.

5.6.3 Aerial Ladder Fasteners. All aerial ladder structural fasteners and fastened connections shall be inspected visually for cracked fasteners and material cracks around the fasteners.

5.6.4 Ladder Section Alignment. Measurements shall be taken to determine that the amount of ladder section twist or bow in the aerial ladder does not exceed manufacturer's specifications for allowable ladder section twist or bow.

5.6.5 Hydraulic, Pneumatic, and Electrical Lines in Ladder Sections. All hydraulic, pneumatic, and electrical lines in ladder sections shall be inspected for proper mounting and for wear, cracking, kinks, and abrasions.

5.6.6 Top Rails. The top rails shall be inspected as follows:

(1) Inspect the top rails for straightness or any signs of misalignment.
(2) (+) Take hardness readings at intervals of 710 mm (28 in.) or less along the entire length of both top rails of aluminum ladders, and compare the results with the manufacturer's specifications for the hardness of the material used for construction of the top rail.

5.6.7 Vertical and Diagonal Braces. The vertical and diagonal braces shall be inspected as follows:

(1) Inspect the verticals and diagonals for straightness, dents, and other deformities.
(2) (+) Inspect all accessible attachment welds.

5.6.8* Base Rails. The base rails shall be inspected as follows:

(1) Inspect the base rail for straightness and any signs of wear, ironing, dents, or corrosion.
(2) (+) Inspect the bottom of all hollow I-beam base rails to determine that the thickness of the rail is not less than the manufacturer's minimum specifications.
(3) (+) Take hardness readings at intervals of 710 mm (28 in.) or less along the entire length of both base rails of aluminum ladders, and compare the results with the manufacturer's specifications for the hardness of the material used for construction of the base rail.

5.6.9 Rungs. All rungs of the aerial ladder shall be inspected for straightness, signs of fly lock damage, damaged or loose rung covers and rung cap castings, and signs of cracks or missing rivets, if applicable.

5.6.10 Folding Steps. The folding steps on the ladder shall be inspected as follows:

(1) Visually inspect the folding steps and folding step mounting brackets for defects and the welds for fractures.
(2) (+) Inspect all welds on the folding step(s) and folding step mounting brackets.

5.6.11 Rollers. All rollers shall be inspected for proper lubrication and operation and for any signs of wear.

5.6.12 Guides, Babbitts, Wear Strips, Pads, and Slide Blocks.

5.6.12.1 The guides shall be visually inspected for cracked welds, loose rivets, alignment problems, and any irregularities.

5.6.12.2 The babbitts shall be inspected for signs of wear.

5.6.12.3 The wear strips, pads, and slide blocks shall be inspected for wear and gouging and for proper mounting.

5.6.13 Extension Sheaves. The extension sheaves shall be inspected as follows:

(1) Inspect extension sheaves for signs of wear, free movement during operation, proper retainers, and proper lubrication.
(2) Visually inspect all extension sheave mounting brackets for defects and the welds for fractures.
(3) (+) Inspect all welds of extension sheave mounting brackets.

5.6.14 Extension Cables. The extension cables shall be inspected for compliance with Appendix A of SAE J959, *Lifting Crane, Wire-Rope Strength Factors.*

5.6.15 Extension and Retraction Motor. The extension and retraction motor shall be inspected for signs of external hydraulic fluid leakage and, where applicable, brake wear and brake alignment with the shaft.

5.6.16 Cable Separation Guide. During operation of the aerial ladder, the cable separation guide shall be inspected visually for free travel and any signs of misalignment.

5.6.17 Winch Holding Capacity. The winch shall be inspected for holding capacity as follows:

(1) Fully elevate the aerial ladder and extend it 3 m (10 ft).
(2) Measure the winch slippage for a 5-minute period.
(3) Verify that the slippage does not exceed the manufacturer's specifications.

5.6.18 Brake Holding Capacity. The brake holding capacity of the extension motor shall be inspected as follows:

(1) Fully elevate the aerial ladder and extend it 3 m (10 ft).
(2) Measure the brake slippage for a 5-minute period.
(3) Verify that the slippage does not exceed the manufacturer's specifications.

--`,,,`-`-`,,`,,`,`,,`---

Copyright National Fire Protection Association
Provided by IHS under license with NFPA
No reproduction or networking permitted without license from IHS
Not for Resale

5.6.19 Extension, Elevation, and Rung Alignment Indicators. The elevation, extension, and rung alignment indicators shall be inspected for legibility, clarity, and accuracy.

5.6.20 Fly Locks. The fly lock mechanisms shall be inspected for proper mounting, alignment, lubrication, and operation.

5.6.21 Ladder Cradle.

5.6.21.1 The aerial ladder cradle shall be inspected as follows:

(1) Inspect the ladder cradle for wear, proper alignment, and the cradle pad for damage.
(2) Visually inspect the ladder cradle for defects such as weld cracks, dents, or bends.
(3) (+) Inspect the ladder cradle welds and bracket attachments.

5.6.21.2 If the aerial ladder cradle is bolted, it shall be further inspected as follows:

(1) Inspect all accessible bolts for proper grade and installation as specified by the apparatus manufacturer.
(2) Using a properly calibrated torque wrench, verify that the bolt torque on all accessible mounting bolts meets the apparatus manufacturer's specification.
(3) (+) Inspect all accessible bolts for internal flaws.

5.6.22 Ladder Bed Lock. The ladder bed lock mechanism and hydraulic lines shall be inspected for proper mounting, signs of wear, and hydraulic fluid leakage at fittings.

5.6.23 Stop Mechanism. The stop mechanisms shall be inspected to ensure that they prevent overextension or overretraction of the aerial ladder.

5.6.24 Maximum Extension Warning Device. During operation, if the aerial ladder is equipped with an audible device that warns of the approach of maximum extension, the device shall be inspected to verify proper operation.

5.6.25 Ladder Illumination. The lights that are used to illuminate the ladder shall be inspected for proper operation.

5.6.26 Extension Cylinder Anchor Ears and Plates.

5.6.26.1 The extension cylinder anchor ears and plates shall be inspected as follows:

(1) Visually inspect the extension cylinder anchor ears and plates for defects and the attaching welds for fractures.
(2) (+) Inspect the attaching welds of the extension cylinder anchor ears and plates.

5.6.26.2 If the extension cylinder anchor is bolted, it shall be further inspected as follows:

(1) Inspect all accessible bolts for proper grade and installation as specified by the apparatus manufacturer.
(2) Using a properly calibrated torque wrench, verify that the bolt torque on all accessible bolts meets the manufacturer's specification.
(3) (+) Inspect all accessible bolts for internal flaws.

5.6.27 Extension Cylinder Pins. The extension cylinder pins shall be inspected as follows:

(1) Inspect the cylinder pins for proper installation and retention.
(2) (+) Inspect the cylinder pins for internal flaws.

5.6.28 Extension Cylinder.

5.6.28.1 The extension cylinders shall be inspected as follows:

(1) Inspect the cylinder rods for pitting, scoring, and other defects.
(2) Inspect the cylinder rod-to-barrel seal and the end gland seal for external hydraulic fluid leakage that exceeds the manufacturer's specifications.

5.6.28.2 The extension cylinder shall be subjected to a drift test as follows:

(1) With the hydraulic fluid at ambient temperature, place the aerial device at full elevation and 3 m (10 ft) of extension.
(2) Mark the cylinder position or the second aerial ladder section in relation to the base section.
(3) Allow the ladder to stand for 1 hour with the engine off.
(4) Measure the drift and verify that the results do not exceed the manufacturer's specifications for allowable cylinder drift.

5.6.29 Holding Valves on Extension Cylinder. The holding valves shall be inspected for external and internal hydraulic fluid leakage.

5.6.30 Tip Controls. If the aerial ladder is equipped with a secondary operating position at the tip, the controls shall be inspected as follows:

(1) Check that the control handles are not damaged or missing, functions are identified, and operating instructions and warnings are posted.
(2) Verify that the controls operate smoothly, return to neutral when released, and do not bind during operation.
(3) Verify that the turntable or lower controls will override the tip controls.
(4) Verify that any safety devices that are designed to operate in conjunction with the tip controls are fully operational.
(5) If the aerial ladder was built to the 1996 or a later edition of NFPA 1901, *Standard for Automotive Fire Apparatus*, verify that the speed of the aerial ladder, when being operated from the tip controls, does not exceed the speeds allowed in the edition of NFPA 1901 to which the aerial ladder was manufactured.

5.7 Operating Test.

5.7.1 After starting the engine, setting the stabilizers, and transmitting power to the ladder, the ladder shall be fully elevated out of the bed, rotated 90 degrees, and extended to full extension.

5.7.2 The aerial ladder shall complete the procedure defined in 5.7.1 smoothly and without undue vibration within the time allowed by the edition of NFPA 1901, *Standard for Automotive Fire Apparatus*, in effect at the time of manufacture.

5.7.3 The ladder shall then be retracted, the turntable rotation completed through 360 degrees, and the ladder lowered to its bed.

5.7.4 During the test, the proper operation of all ladder controls shall be verified.

5.7.5 After the procedure defined in 5.7.1 through 5.7.4 is completed, a thorough inspection shall be made of all moving parts.

5.7.6 The security and adjustment of the ladder cables or chains shall be checked for proper tension and retention per the manufacturer's specifications.

Copyright National Fire Protection Association
Provided by IHS under license with NFPA
No reproduction or networking permitted without license from IHS
Not for Resale

5.8 Load Testing.

5.8.1* Tests shall be conducted when the wind velocity is less than 16 kmph (10 mph).

5.8.2 Only those personnel who are essential to conduct the test shall be permitted near the apparatus during the test.

5.8.3 A close watch shall be maintained during all load tests for any signs of instability, the development of conditions that could cause damage or permanent deformation, or twist that exceeds the aerial ladder manufacturer's allowance. The test shall be discontinued immediately if such conditions develop.

5.8.4 Horizontal Load Test.

5.8.4.1 The aerial apparatus shall be on a hard, level surface with the stabilizers deployed in accordance with the manufacturer's instructions. The aerial ladder's turntable shall be level.

5.8.4.2* A test cable hanger shall be attached to the top rung of the top section of the ladder and properly centered.

5.8.4.3 The rated capacity that the ladder is designed to support in the horizontal position at full extension shall be determined from the manufacturer's load chart or operator's manual. If full extension is not permitted in the horizontal position with a specified rated capacity, then the maximum permissible extension with a specified rated capacity shall be used for the purpose of this test.

5.8.4.4 The ladder shall be positioned as follows:

(1) For single chassis apparatus, the ladder shall be rotated, if necessary, until it is positioned over the rear and parallel to the vehicle centerline.
(2) For a tractor-drawn apparatus, the ladder shall be positioned in the most stable position as recommended by the manufacturer.

5.8.4.5 The ladder shall be placed in the horizontal position and extended to full extension or the maximum-permitted extension as determined in 5.8.4.3. The base section shall not be allowed to rest in the bed.

5.8.4.6 The ladder section locks, either manual pawls or hydraulic holding valves, shall be applied properly.

5.8.4.7 The elevation cylinders' integral holding valve or shutoff safety valve shall be properly closed or applied.

5.8.4.8* A free-hanging weight that is equal to the rated capacity, as determined in 5.8.4.3, shall be applied gradually to the top rung of the aerial ladder by utilizing a test weight container or other suitable means of applying the weight.

5.8.4.8.1 The weight shall be suspended by a cable and shall not be more than 1 m (3 ft) above the ground.

5.8.4.8.2 The combined weight of the test cable hanger and cable, the test weight container, and the test weights shall not exceed the rated capacity.

5.8.4.8.3 The weights shall be added to the ladder in a manner that does not shock load the ladder.

CAUTION: Dropping the weights and shock loading the ladder can damage the ladder.

5.8.4.9 The test weight shall be sustained by the unsupported aerial ladder for 5 minutes.

5.8.4.10 The test weight shall hang freely from the tip of the aerial ladder. If the test weight hanger and ladder deflection are such that the test weight comes to rest on the ground, it shall be permissible to raise the ladder elevation slightly above the horizontal position.

5.8.4.11 The ladder shall not be moved while the test weight is applied.

CAUTION: Moving the ladder with a test weight applied could result in the application of forces that damage the ladder.

5.8.4.12 After removal of the test weight, a complete visual inspection shall be made of all load-supporting elements.

5.8.4.12.1 Any visually detectable signs of damage, permanent deformation, or twist exceeding the manufacturer's specification shall constitute noncompliance with the load test requirements, and the aerial ladder shall be placed out of service.

5.8.4.12.2 The aerial device shall meet the requirements of Section 5.7 after the horizontal load test.

5.8.5 Maximum Elevation Load Test.

5.8.5.1 The aerial apparatus shall be on a hard, level surface with the stabilizers deployed in accordance with the manufacturer's instructions, and the aerial ladder's turntable shall be level.

5.8.5.2* A test cable hanger shall be attached to the top rung of the top section of the ladder and centered.

5.8.5.3 The maximum rated capacity that the ladder is designed to support in the maximum-elevated position at full extension shall be determined from the manufacturer's load chart or operator's manual.

5.8.5.4 The ladder shall be rotated, if necessary, until the ladder is positioned over the rear and parallel to the vehicle centerline. Midship-mounted aerial ladders shall be permitted to be rotated slightly off of the vehicle centerline to apply the test load without interfering with the body of the apparatus.

5.8.5.5 The ladder shall be positioned at its maximum elevation and full extension.

5.8.5.6 The ladder section locks, either manual pawls or hydraulic holding valves, shall be applied properly.

5.8.5.7 The elevation cylinders' integral holding valve or shutoff safety valve shall be properly closed or applied.

5.8.5.8 A free-hanging weight that is equal to the rated capacity, as determined in 5.8.5.3, shall be applied gradually to the top rung of the aerial ladder by utilizing a test weight container or other suitable means of applying the weight.

5.8.5.8.1 The weight shall be suspended by a cable and shall not be more than 1 m (3 ft) above the ground.

5.8.5.8.2 The combined weight of the test cable hanger and cable, the test weight container, and the test weights shall not exceed the rated capacity.

5.8.5.8.3 The weights shall be added to the ladder in a manner that does not shock load the ladder.

CAUTION: Dropping the weights and shock loading the ladder can damage the ladder.

5.8.5.9 The test weight shall be sustained by the unsupported aerial ladder for 5 minutes.

Copyright National Fire Protection Association
Provided by IHS under license with NFPA
No reproduction or networking permitted without license from IHS
Not for Resale

5.8.5.10 The test weight shall hang freely from the tip of the aerial ladder.

5.8.5.11 The ladder shall not be moved while the test weight is applied.

CAUTION: Moving the ladder with a test weight applied could result in the application of forces that damage the ladder.

5.8.5.12 After removal of the test weight, a complete visual inspection shall be made of all load-supporting elements.

5.8.5.12.1 Any visually detectable signs of damage, permanent deformation, or twist exceeding the manufacturer's specification shall constitute noncompliance with the load test requirements, and the aerial ladder shall be placed out of service.

5.8.5.12.2 The aerial device shall also meet the requirements of Section 5.7 after the maximum elevation load test.

5.9 Waterway System Test.

5.9.1 The following inspection and test shall apply only to permanently piped, aerial ladder waterway systems.

5.9.2 The waterway system shall be inspected as follows:

(1) Inspect the system for proper operation of all components.
(2) Inspect the system for rust, corrosion, blockage, or other defects.

5.9.3 The waterway-attaching brackets shall be inspected as follows:

(1) Inspect the brackets for loose bolts, weld fractures, or other defects.
(2) (+) Inspect all attaching welds.

5.9.4 Pressure Test. The water system shall be pressure tested.

5.9.4.1* The aerial device shall be positioned between 0 degrees and 10 degrees elevation and fully retracted.

5.9.4.1.1 If there is not a valve at the discharge end, a valve shall be attached for the purpose of this test.

5.9.4.1.2* The water system shall be filled with water, and the valve at the discharge end shall be closed.

CAUTION: For safety reasons, all air must be removed from the system.

5.9.4.1.3 The pressure on the system shall be raised to the water system manufacturer's maximum-rated working pressure and shall be maintained while the operations and inspections required by 5.9.4.1.4 and 5.9.4.1.5 are conducted.

5.9.4.1.4 The aerial device shall be raised to full elevation and rotated 360 degrees.

5.9.4.1.5 The water system, including the turntable swivel, shall be checked for leaks.

5.9.4.1.6 Care shall be taken not to overheat the water pump during this test.

5.9.4.2* The aerial device shall then be positioned between 0 degrees and 10 degrees elevation and extended to its maximum permissible limit.

5.9.4.2.1 The water system shall be filled with water, all air removed from the system, and the valve at the discharge end closed.

CAUTION: Failure to remove all air from the water system could result in injury if there is a component failure during the test.

5.9.4.2.2 The pressure on the system shall be raised to the water system manufacturer's maximum-rated working pressure and maintained while the inspections required by 5.9.4.2.3 are conducted.

5.9.4.2.3 The entire length of the water system shall be checked for leaks.

5.9.4.2.4 Care shall be taken not to overheat the water pump during this test.

5.9.4.3* The water system shall operate properly and with an absence of leaks during these tests.

5.9.5 Flowmeter(s).

5.9.5.1 If the waterway system is equipped with a flowmeter(s), the flowmeter(s) shall be tested at the water system manufacturer's maximum-rated water system flow.

5.9.5.2 Any meter that reads off by more than 10 percent shall be recalibrated, repaired, or replaced.

5.9.6 Pressure Gauge(s).

5.9.6.1 If the waterway system is equipped with a water pressure gauge(s), each water pressure gauge shall be checked for accuracy to at least 3 points at 50 psi (3.45 bar) intervals without exceeding the maximum rated working pressure of the waterway system.

5.9.6.2 Any gauge that reads off by more than 0.7 bar (10 psi) shall be recalibrated, repaired, or replaced.

5.9.7 If the waterway system is equipped with a relief valve, this relief valve shall be checked to verify that it is operational at the waterway manufacturer's recommended pressure setting.

5.10 Signs. All signs shall be inspected to verify they are in place and legible.

5.11* Hydraulic Fluid. After the operational tests have been performed, a sample of the hydraulic fluid shall be removed from the hydraulic reservoir and subjected to spectrochemical analysis, particle count, viscosity check, and water content analysis.

5.12* Records. A comprehensive record shall be completed for all tests of the aerial ladder and signed by the person responsible for the test.

5.12.1 When the torque verification of mounting bolts is performed as required by this standard, the bolt size, grade, and torque specifications shall be recorded.

5.12.2 When NDT is conducted, the test record shall indicate the NDT method used in each inspected area.

5.12.3 Where this standard requires measurements to be taken — such as bearing clearance and backlash, cylinder drift, relief pressure, ladder section twist, hardness readings, base rail thickness, extension brake drift, winch drift, and the like — these measurements shall be recorded in the test record so that a year-to-year comparison can be made.

Chapter 6 Inspecting and Testing Elevating Platforms

6.1 General.

6.1.1 In addition to the manufacturer's recommendations for annual inspections and tests, the inspections and tests detailed in Sections 6.2 through 6.15 shall be performed.

Copyright National Fire Protection Association
Provided by IHS under license with NFPA
No reproduction or networking permitted without license from IHS
Not for Resale

6.1.2 An inspection preceded by a plus sign (+) indicates that an appropriate nondestructive test (NDT) shall be conducted as required by 4.1.2 of this standard.

6.2 Service Records. The elevating platform's service records shall be checked for any reports that indicate defective conditions.

6.3 Hydraulic Components. Hydraulic components shall show no signs of hydraulic fluid leakage.

6.3.1 A component shall be considered leaking if hydraulic fluid (oil) droplets are forming on the component.

6.3.2 A film of hydraulic fluid on the component shall not be considered severe enough to categorize the component as leaking.

6.4 Turntable and Torque Box Inspection and Test. The turntable and torque box components, where applicable, shall be inspected in accordance with 5.4.1 and 5.4.2, 5.4.4 through 5.4.13, and 5.4.18 through 5.4.29.

6.5 Stabilizer Inspection and Test. The stabilizer components, where applicable, shall be inspected in accordance with 5.5.1 through 5.5.14.

6.6 Platform and Boom Inspection and Test. The platform and booms shall be inspected in accordance with 6.6.1 through 6.6.12.

6.6.1 Structural Modifications, Improper Repairs, or Added Weight.

6.6.1.1 The platform and booms shall be inspected for structural modifications or improper repairs.

6.6.1.2 The platform shall be inspected to determine that no extra equipment has been added to the platform without subtracting the weight of such equipment from the rated capacity.

6.6.1.3 Details of any structural modifications, improper repairs, or added weight shall be contained in the required report.

6.6.2 Platform Mounting Brackets. The platform mounting brackets shall be inspected as follows:

(1) Visually inspect all platform mounting brackets for defects, such as weld cracks, dents, or bends.
(2) (+) Inspect all welds in the platform mounting brackets.
(3) (+) Inspect all bolts and pins structurally involved with the platform mounting to the ladder or boom for internal flaws.

6.6.3 Platform. The platform shall be inspected as follows:

(1) Visually inspect the platform for defects, such as weld cracks, dents, or bends.
(2) (+) Inspect all welds on the platform.

6.6.4 Hydraulic, Pneumatic, and Electrical Lines in the Platform. All hydraulic, pneumatic, and electrical lines shall be inspected for proper mounting, wear, cracking, kinks, and abrasions.

6.6.5 Auxiliary Winch Mounting. The auxiliary winch mounting shall be inspected as follows:

(1) Inspect all mounting bolts for proper grade and installation as specified by the apparatus manufacturer.
(2) Using a calibrated torque wrench, verify that the torque on all winch mounting bolts meets the apparatus manufacturer's specifications.
(3) If welded, visually inspect the winch mounting for weld fractures.
(4) (+) Inspect the mounting bolts for internal flaws.
(5) (+) If brackets are welded, inspect all welds on the mounting brackets.

6.6.6 Winch Controls. The winch controls shall be inspected as follows:

(1) Inspect controls for proper identification as to function and operation.
(2) Verify smooth operation of the winch controls.

6.6.7 Elevating Platform Rated Capacity Identification. The elevating platform rated capacity identification plate shall be checked to verify that it is present, proper, and legible.

6.6.8 Platform Gate Latches and Hinge Points.

6.6.8.1 The platform gate latches shall be inspected for proper alignment.

6.6.8.2 The latch and hinges shall be inspected for smooth operation.

6.6.9 Platform Hinge Pins. The platform hinge pins shall be inspected as follows:

(1) Inspect platform hinge pins for proper installation, lubrication, and any irregularities.
(2) (+) Inspect the platform hinge pins for internal flaws.

6.6.10 Platform Controls. The platform controls shall be inspected as follows:

(1) Inspect the platform operating controls to ensure control handles are not damaged or missing, functions are identified, and operating instructions and warnings are posted.
(2) Verify that the controls operate smoothly, return to neutral when released, and do not bind during operation.
(3) Verify that the turntable or lower controls will override the platform controls.

6.6.11 Platform Monitor and Nozzle. The platform monitor and nozzle shall be inspected as follows:

(1) Inspect the complete operation of the platform monitor and nozzle.
(2) Inspect the monitor's mounting brackets for any defects and their welds for fractures.

6.6.12 Boom Illumination. The operation of spotlights used to illuminate the boom shall be verified.

6.7 Articulating Boom–Lower Boom Inspection and Test. For apparatus equipment with an articulating boom, the lower boom shall be inspected and tested in accordance with 6.7.1 through 6.7.14.

6.7.1 Hinge Pins. The hinge pins shall be inspected as follows:

(1) Inspect the boom hinge pins for proper installation, lubrication, operation, and any discontinuities.
(2) (+) Inspect the boom hinge pins for internal flaws.

6.7.2 Lower Boom Elevation Cylinder Anchor Ears and Plates. The lower boom elevation cylinder anchor ears and plates shall be inspected as follows:

(1) Visually inspect the anchor ears and plates for defects and the attaching welds for fractures.
(2) (+) Inspect all welds on the anchor ears and plates.

Copyright National Fire Protection Association
Provided by IHS under license with NFPA
No reproduction or networking permitted without license from IHS
Not for Resale

6.7.3 Lower Boom Elevation Cylinders.

6.7.3.1 The boom elevation cylinder shall be inspected as follows:

(1) Inspect the cylinder rod(s) for pitting, scoring, or other defects.
(2) Inspect the cylinder rod-to-barrel seal and the end gland seal for external hydraulic fluid leakage that exceeds the manufacturer's specifications.

6.7.3.2 The lower boom elevation cylinder shall subjected to a drift test as follows:

(1) With the hydraulic fluid at ambient temperature, take measurements of the drift in accordance with the manufacturer's recommendations.
(2) Verify that the results do not exceed the manufacturer's specifications for allowable lower boom cylinder drift.

6.7.4 Holding Valves on Boom Elevation Cylinder. The holding valves shall be inspected for signs of external hydraulic fluid leakage.

6.7.5 Boom Assembly. The lower boom assembly shall be inspected as follows:

(1) Visually inspect the boom for defects, such as weld cracks, dents, or bends.
(2) Visually inspect all structural fasteners and fastened connections for cracked fasteners and material cracks around the fasteners.
(3) (+) Inspect all welds on the boom for any structural discontinuities.
(4) (+) Take hardness readings at intervals of 710 mm (28 in.) or less on booms that are constructed of aluminum, and compare the results with the manufacturer's specifications for the hardness of the material used for construction of the boom assembly.

6.7.6 Cylinder Link Pins. The cylinder link pins shall be inspected as follows:

(1) Inspect the cylinder link pins for proper installation, lubrication, operation, and any fractures.
(2) (+) Inspect the cylinder link pins for internal flaws.

6.7.7 Platform Leveling Linkages. The platform leveling linkages shall be inspected as follows:

(1) Visually inspect linkages for defects, such as weld cracks, dents, and bends.
(2) (+) Inspect all welds of the leveling assembly.
(3) (+) Inspect all leveling linkage pins for any internal flaws.

6.7.8 Hydraulic Lines and Hose in Lower Boom. All hydraulic lines in the lower boom shall be inspected for proper mounting, abrasion, hydraulic fluid leakage, and wear.

6.7.9 Hydraulic Lines in Knuckle. All hydraulic lines in the knuckle shall be inspected for hydraulic fluid leakage, abrasion, and any signs of wear.

6.7.10 Cables, Chains, and Rods. All cables, chains, and rods shall be inspected for signs of wear and for proper adjustment.

6.7.11 Sprockets, Pulleys, and Hooks. All sprockets, pulleys, and hooks shall be inspected for proper lubrication, signs of wear, distortion, and proper operation.

6.7.12 Boom Support.

6.7.12.1 The boom support shall be inspected as follows:

(1) Inspect the boom support for wear and proper alignment, and the cradle pad for damage.
(2) Visually inspect the boom support for defects, such as weld cracks, dents, or bends.
(3) (+) Inspect the boom support welds and bracket attachment.

6.7.12.2 If the boom support is bolted, it shall be further inspected as follows:

(1) Inspect all accessible bolts for proper grade and installation as specified by the apparatus manufacturer.
(2) Using a properly calibrated torque wrench, verify that the bolt torque on all accessible mounting bolts meets the apparatus manufacturer's specification.
(3) (+) Inspect all accessible bolts for internal flaws.

6.7.13 Lower Boom Angle Indicator Lights. The lower boom angle indicator lights shall be inspected to verify that they are operating properly.

6.7.14 Pneumatic and Electrical Lines. All pneumatic and electrical lines in the lower boom and the knuckle shall be inspected for proper mounting, wear, cracking, kinks, and abrasions.

6.8 Articulating Boom–Upper Boom Inspection and Test. For apparatus equipment with an articulating boom, the upper boom shall be inspected and tested in accordance with 6.8.1 through 6.8.15.

6.8.1 Upper Boom for Alignment with Lower Boom. The upper boom shall be inspected to verify it is aligned with the lower boom.

6.8.2 Platform Leveling Linkages. The platform leveling linkages shall be inspected as follows:

(1) Visually inspect linkages for defects, such as weld cracks, dents, and bends.
(2) (+) Inspect all welds of the leveling assembly.
(3) (+) Inspect all leveling linkage pins for any internal flaws.

6.8.3 Boom Boost Cylinder Brackets. The boom boost cylinder brackets shall be inspected as follows:

(1) Visually inspect the boom boost cylinder brackets for defects, such as weld cracks, dents, or bends.
(2) (+) Inspect the boom boost cylinder bracket welds.

6.8.4 Boom Boost Cylinders. The boom boost cylinders shall be inspected for any external hydraulic fluid leakage.

6.8.5 Cylinder Link Pins. The cylinder link pins shall be inspected as follows:

(1) Visually inspect the cylinder link pins for proper installation, lubrication, operation, and any irregularities.
(2) (+) Inspect the cylinder link pins for internal flaws.

6.8.6 Boom Assembly. The upper boom assembly shall be inspected as follows:

(1) Visually inspect the boom for defects, such as weld cracks, dents, or bends.
(2) Visually inspect all structural fasteners and fastener connections for cracked fasteners and material cracks around the fasteners.
(3) (+) Inspect all welds on the boom.
(4) (+) Take hardness readings at intervals of 710 mm (28 in.) or less on booms that are constructed of aluminum, and compare the results of this inspection with the manufacturer's specifications for the hardness of the material used for construction of the boom assembly.

Copyright National Fire Protection Association
Provided by IHS under license with NFPA
No reproduction or networking permitted without license from IHS
Not for Resale

6.8.7 Hydraulic Lines and Hose in Upper Boom. All hydraulic lines and hose in the upper boom shall be inspected for proper mounting, abrasions, hydraulic fluid leakage, and wear.

6.8.8 Cables, Chains, and Rods. All cables, chains, and rods shall be inspected for signs of wear and for proper adjustment.

6.8.9 Sprockets, Pulleys, and Hooks. All sprockets, pulleys, and hooks shall be inspected for proper lubrication, signs of wear, distortion, and proper operation.

6.8.10 Upper Boom Hold-Down Device. The upper boom hold-down device shall be inspected as follows:

(1) Visually inspect the upper boom hold-down device for defects and for proper operation.
(2) (+) Inspect all welds of the upper boom hold-down device.

6.8.11 Safety Stop Mechanism. The safety stop mechanism shall be verified to be operating properly.

6.8.12 Upper Boom Elevation Cylinder Anchor Ears and Plates. The upper boom elevation anchor ears and plates shall be inspected as follows:

(1) Visually inspect the anchor ears and plates for defects and the welds for fractures.
(2) (+) Inspect all welds on the anchor ears and plates.

6.8.13 Upper Boom Elevation Cylinder(s).

6.8.13.1 The upper boom elevation cylinder(s) shall be inspected as follows:

(1) Inspect the cylinder rod(s) for pitting, scoring, and other defects.
(2) Inspect the cylinder rod-to-barrel seal and the end gland seal for external hydraulic fluid leakage that exceeds the manufacturer's specifications.

6.8.13.2 The upper boom elevation cylinder shall be subjected to a drift test as follows:

(1) With the hydraulic fluid at ambient temperature, take measurements of the drift in accordance with the manufacturer's recommendations.
(2) Verify that the results do not exceed the manufacturer's specifications for allowable lower boom cylinder drift.

6.8.14 Holding Valves on Upper Boom Elevation Cylinder. The holding valve(s) shall be inspected for signs of external hydraulic fluid leakage.

6.8.15 Pneumatic and Electrical Lines. All pneumatic and electrical lines in the upper boom shall be inspected for proper mounting, wear, cracking, kinks, and abrasions.

6.9 Telescoping Boom Inspection and Test. For platforms equipped with a telescoping boom, the boom shall be inspected and tested in accordance with 5.4.14 through 5.4.17, 6.7.10 through 6.7.12, and 6.9.1 through 6.9.14.

6.9.1 Boom Assemblies. The boom assemblies shall be inspected as follows:

(1) Visually inspect booms for defects, such as weld cracks, dents, or bends.
(2) Visually inspect all structural fasteners and fastened connections for cracked fasteners and material cracks around the fasteners.
(3) (+) Inspect all welds on booms.
(4) (+) Take hardness readings at intervals of 710 mm (28 in.) or less on booms that are constructed of aluminum, and compare the results of this inspection with the manufacturer's specifications for the hardness of the material used for construction of the boom assembly.

6.9.2 Ancillary Boom Ladder. The ancillary boom ladder shall be inspected as follows:

(1) Inspect the ancillary boom ladder for any defects and the welds for fractures.
(2) Inspect the mounting brackets for loose bolts, weld fractures, or other defects.
(3) (+) Inspect all welds on the ladder and attaching welds.

6.9.3 Guides, Wear Strips and Pads, and Slide Blocks. Guides, wear strips and pads, and slide blocks shall be inspected for proper installation and signs of wear.

6.9.4 Extension Sheaves. The extension sheaves shall be inspected as follows:

(1) Inspect the extension sheaves for proper mounting, alignment, and signs of wear.
(2) (+) Inspect all welds of the extension sheave mounting brackets.
(3) (+) Inspect retaining bolt for internal flaws.

6.9.5 Extension Cables. Extension cables shall be inspected for compliance with Appendix A of SAE J959, *Lifting Crane, Wire-Rope Strength Factors*.

6.9.6 Elevation Indicator. The elevation cylinder indicator shall be inspected for legibility and clarity.

6.9.7 Maximum Extension Warning Device. During operation, if the elevating platform is equipped with an audible device that warns of the approach of maximum extension, the device shall be inspected to verify proper operation.

6.9.8 Platform Leveling Cylinders. The platform leveling cylinders shall be inspected as follows:

(1) Inspect the cylinder rod(s) for pitting, scoring, and other defects.
(2) Inspect the cylinder rod-to-barrel seal and the end gland seal for external hydraulic fluid leakage that exceeds the manufacturer's specifications.
(3) Visually inspect the leveling system for proper installation.
(4) Visually inspect the mounting of the leveling system for defects and the welds for fractures.
(5) (+) Inspect all welds for mounting of the leveling system.
(6) (+) Inspect all leveling cylinder pins for any internal flaws.

6.9.9 Hydraulic Lines and Hose in Boom Assemblies. All hydraulic lines and hose in the boom assemblies shall be inspected for hydraulic fluid leakage, abrasions, and any signs of wear.

6.9.10 Extension Cylinder Anchor Ears and Plates. The extension cylinder anchor ears and plates shall be inspected as follows:

(1) Visually inspect the extension cylinder anchor ears and plates for defects and the attaching welds for fractures.
(2) (+) Inspect the extension cylinder anchor ears and the plate-attaching welds.

6.9.11 Extension Cylinder Pins. The extension cylinder pins shall be inspected as follows:

--`,,,-`-`,,`,,`,`,,`---

Copyright National Fire Protection Association
Provided by IHS under license with NFPA
No reproduction or networking permitted without license from IHS
Not for Resale

(1) Inspect the cylinder pins for proper installation and retention.
(2) (+) Inspect the cylinder pins for internal flaws.

6.9.12 Extension Cylinder.

6.9.12.1 The extension cylinders shall be inspected as follows:

(1) Inspect the cylinder rods for pitting, scoring, and other defects.
(2) Inspect the cylinder rod-to-barrel seal and the end gland seal for external hydraulic fluid leakage that exceeds the manufacturer's specifications.

6.9.12.2 The extension cylinders shall be subjected to a drift test as follows:

(1) With the hydraulic fluid at ambient temperature, place the aerial device at full elevation and 3 m (10 ft) of extension.
(2) Mark the cylinder position or the second boom section in relation to the base section.
(3) Allow the elevating platform to stand for 1 hour with the engine off.
(4) Measure the drift, and verify that the results do not exceed the manufacturer's specifications for allowable cylinder drift.

6.9.13 Holding Valves on Extension Cylinder. The holding valves shall be inspected for external hydraulic fluid leakage.

6.9.14 Pneumatic and Electrical Lines. All pneumatic and electrical lines in the booms shall be inspected for proper mounting, wear, cracking, kinks, and abrasions.

6.10 Operational Tests from Lower Controls.

6.10.1 With engine speed set to allow maximum speed as permitted by the manufacturer, the elevating platform shall be operated in all positions, as allowed by the manufacturer, using the lower or ground controls.

6.10.2 The operation of the elevating platform shall include, but not be limited to, moving the platform from ground to maximum elevation as well as revolving the platform 360 degrees to the left and to the right while the unit is at its maximum horizontal reach.

6.10.3 All safety devices shall operate properly.

6.10.4 All controls shall operate smoothly, return to the neutral position when released, and not bind during operation.

6.10.5 Rollers, slides, and sheave wheels on telescoping elevating platforms shall be checked for proper alignment, function, and free operation.

6.10.6 A complete test of elevating platform's operation shall be conducted using the lower or ground controls.

6.10.6.1 After starting the engine, setting the stabilizers, and transmitting power to the platform booms or sections, the elevating platform shall be raised out of the bed, extended to its full height, and rotated through a 90-degree turn.

6.10.6.2 The elevating platform shall complete the procedure defined in 6.10.6.1 smoothly and without undue vibration within the time allowed by the edition of NFPA 1901, *Standard for Automotive Fire Apparatus*, in effect at the time of manufacture.

6.10.6.3 The elevating platform shall be retracted, the turntable rotation shall be completed through 360 degrees, and the elevating platform shall be lowered to its bed.

6.10.6.4 During the test, the proper operation of all elevating platform controls shall be verified.

6.10.6.5 After the procedure defined in 6.10.6.3 is completed, a thorough inspection shall be made of all moving parts.

6.11 Operational Tests from Platform Controls.

6.11.1 With engine speed set to allow maximum speed as permitted by the manufacturer, the elevating platform shall be operated from the platform control station through all positions, as allowed by the manufacturer, with only the operator in the platform.

6.11.2 The operation of the elevating platform shall include, but not be limited to, movement of the platform from ground to maximum elevation, as well as revolving the platform 360 degrees to the left and to the right while the unit is at its maximum horizontal reach.

6.11.3 All safety devices shall operate properly.

6.11.4 The platform deactivation control, from the ground or lower controls, shall be demonstrated to operate properly.

6.11.5 The platform shall level properly as the booms are moved through all allowable positions.

6.11.6 The mechanical override on a hydraulically leveled platform shall operate properly during emergency lowering of the boom without hydraulic power.

6.12 Load Test.

6.12.1 The aerial apparatus shall be positioned on a hard, level surface with room for unrestricted boom movements. The stabilizers shall be deployed in accordance with the manufacturer's instructions.

6.12.2 A close watch shall be maintained during all load tests for any signs of instability, the development of conditions that could cause damage or permanent deformation, or twist that exceeds the elevating platform manufacturer's allowance. The test shall be discontinued immediately if such conditionsdevelop.

6.12.3 The platform shall be loaded as follows:

(1) The platform shall be placed near the ground and shall be loaded to the elevating platform's rated capacity minus the weight of equipment added to the platform after delivery.
(2) The platform load shall be secured properly.

6.12.4 The unit shall be operated from the lower controls through all allowable phases of operation. The manufacturer's operational limits shall not be exceeded.

6.12.5 All boom movements shall exhibit no abnormal noise, vibration, or deflection.

6.12.6 The platform shall level properly as the booms are moved through all allowable positions.

6.12.7 At the conclusion of the load test, weld joints at stabilizer structure, stabilizers, frame, main frame, frame reinforcements, turntable, cylinder anchors, boom joints, leveling system, platform, and pivot pin bosses shall be inspected and shall show no signs of deterioration.

6.13 Water System Inspection and Test.

6.13.1 The waterway system shall be inspected as follows:

(1) Inspect the system for proper operation of all components.

Copyright National Fire Protection Association
Provided by IHS under license with NFPA
No reproduction or networking permitted without license from IHS
Not for Resale

(2) Inspect the system for rust, corrosion, blockage, or other defects.

6.13.2 The waterway attaching brackets shall be inspected as follows:

(1) Inspect the brackets for loose bolts, weld fractures, or other defects.
(2) (+) Inspect all attaching welds.

6.13.3 Pressure Test. The water system shall be pressure tested.

6.13.3.1 If the elevating platform has a telescoping boom, the water system shall be tested following the procedure in 5.9.4.1 and 5.9.4.2.

6.13.3.2* If the elevating platform has an articulating boom, the water system shall be tested as follows:

(1) The boom shall be positioned in the road travel position.
(2) If there is not a valve at the discharge end of the water system, a valve shall be attached for the purpose of this test.
(3) The water system shall be filled with water, all air removed from the system, and the valve at the discharge end closed.
(4) The pressure on the system shall be raised to the water system manufacturer's maximum-rated working pressure and shall be maintained while the elevating platform is raised to its rated vertical height and rotated 360 degrees.
(5) The water system, including the turntable swivel, shall be checked for leaks.
(6) Care shall be taken not to overheat the water pump.

CAUTION: Failure to remove all air from the water system could result in injury if there is a component failure during the test.

6.13.3.3 If the elevating platform has both a telescoping boom and an articulating boom, it shall be tested in accordance with 6.13.3.1 and 6.13.3.2.

6.13.3.4* The water system shall operate properly and with an absence of leaks during these tests.

6.13.4 Flowmeter(s).

6.13.4.1 If the waterway system is equipped with a flowmeter(s), the flowmeter(s) shall be tested at the water system manufacturer's maximum-rated water system flow.

6.13.4.2 Any meter that reads off by more than 10 percent shall be recalibrated, repaired, or replaced.

6.13.5 Pressure Gauge(s).

6.13.5.1 If the waterway system is equipped with a water pressure gauge(s), each water pressure gauge shall be checked for accuracy to at least 3 points at 3.45 bar (50 psi) intervals without exceeding the maximum rated working pressure of the waterway system.

6.13.5.2 Any gauge that reads off by more than 0.7 bar (10 psi) shall be recalibrated, repaired, or replaced.

6.13.6 If the waterway system is equipped with a relief valve(s), the relief valve(s) shall be checked to verify that it is operational at the waterway manufacturer's recommended pressure setting.

6.14 Signs. All signs shall be inspected to verify they are in place and legible.

6.15* Hydraulic Fluid. After the operational tests have been performed, a sample of the hydraulic fluid shall be removed from the hydraulic reservoir and subjected to spectrochemical analysis, particle count, viscosity check, and water content analysis.

6.16* Records. A comprehensive record shall be completed for all tests of the elevating platform and signed by the person responsible for the test.

6.16.1 When the torque verification of mounting bolts is performed as required by this standard, the bolt size, grade, and torque specifications shall be recorded.

6.16.2 When NDT is conducted, the test record shall indicate the NDT method used in each inspected area.

6.16.3 Where this standard requires measurements to be taken — such as bearing clearance and backlash, cylinder drift, relief pressure, ladder section twist, hardness readings, base rail thickness, extension brake drift, winch drift, and the like — these measurements shall be recorded in the test record so that a year-to-year comparison can be made.

Chapter 7 Inspecting and Testing Water Towers

7.1 General.

7.1.1 In addition to the manufacturer's recommendations for annual inspections and tests, the inspections and tests detailed in Sections 7.2 through 7.13 shall be performed.

7.1.2 An inspection preceded by a plus sign (+) indicates that an appropriate nondestructive test (NDT) shall be conducted as required by 4.1.2 of this standard.

7.2 Service Records. The water tower's service records shall be checked for any reports that indicate defective conditions.

7.3 Hydraulic Components. Hydraulic components shall show no signs of hydraulic fluid leakage.

7.3.1 A component shall be considered leaking if hydraulic fluid (oil) droplets are forming on the component.

7.3.2 A film of hydraulic fluid on the component shall not be considered severe enough to categorize the component as leaking.

7.4 Turntable and Torque Box Inspection and Test. The turntable and torque box components, where applicable, shall be inspected on all water tower apparatus in accordance with 5.4.1 and 5.4.2 and 5.4.4 through 5.4.29.

7.5 Stabilizer Inspection and Test. The stabilizer components, where applicable, shall be inspected on all water tower apparatus in accordance with 5.5.1 through 5.5.14.

7.6 Aerial Ladder Inspection and Test. For a water tower apparatus that is equipped with an aerial ladder, the aerial ladder shall be inspected and tested in accordance with Sections 5.6 and 5.8.

7.7 Articulating Boom–Lower Boom Inspection and Test. For a water tower apparatus that is equipped with an articulating boom, the lower boom shall be inspected and tested in accordance with 6.7.1 through 6.7.6 and 6.7.8 through 6.7.14, as applicable.

7.8 Articulating Boom–Upper Boom Inspection and Test. For a water tower apparatus that is equipped with an articulating

Copyright National Fire Protection Association
Provided by IHS under license with NFPA
No reproduction or networking permitted without license from IHS
Not for Resale

boom, the upper boom shall be inspected and tested in accordance with 6.8.1 and 6.8.3 through 6.8.15, as applicable.

7.9 Telescoping Boom Inspection and Test. For a water tower apparatus that is equipped with a telescoping boom, the boom shall be inspected and tested in accordance with 6.7.10 through 6.7.14, 6.9.1 through 6.9.7, and 6.9.9 through 6.9.14, as applicable.

7.10 Operating Test.

7.10.1 After starting the engine, setting the stabilizers, and transmitting power to the water tower, the water tower shall be fully elevated out of the bed, rotated 90 degrees, and fully extended.

7.10.2 The water tower shall complete the procedure defined in 7.10.1 smoothly and without undue vibration within the time allowed by the edition of NFPA 1901, *Standard for Automotive Fire Apparatus*, in effect at the time of manufacture.

7.10.3 The water tower shall be retracted, the turntable rotation shall be completed through 360 degrees, and then the water tower shall be lowered to its bed, after which a thorough inspection shall be made of all moving parts.

7.10.4 The test shall demonstrate successful operation of all water tower controls.

7.11 Water System Inspection and Test.

7.11.1 The waterway system shall be inspected as follows:

(1) Inspect the system for proper operation of all components.
(2) Inspect the system for rust, corrosion, blockage, or other defects.

7.11.2 The waterway-attaching brackets shall be inspected as follows:

(1) Inspect the brackets for loose bolts, weld fractures, or other defects.
(2) (+) Inspect all attaching welds.

7.11.3 Pressure Test. The water system shall be pressure tested.

7.11.3.1 If the water tower has a telescoping boom, the water system shall be tested following the procedures in 5.9.4.1 and 5.9.4.2.

7.11.3.2 If the water tower has an articulating boom, the water system shall be tested following the procedure in 6.13.3.2.

7.11.3.3 If the water tower has both a telescoping boom and an articulating boom, it shall be tested in accordance with 7.11.3.1 and 7.11.3.2.

7.11.3.4* The water system shall operate properly and with an absence of leaks during these tests.

7.11.4 Flowmeter(s).

7.11.4.1 If the waterway system is equipped with a flowmeter(s), the flowmeter(s) shall be tested at the water system manufacturer's maximum-rated water system flow.

7.11.4.2 Any meter that reads off by more than 10 percent shall be recalibrated, repaired, or replaced.

7.11.5 Pressure Gauge(s).

7.11.5.1 If the waterway system is equipped with a water pressure gauge(s), each water pressure gauge shall be checked for accuracy to at least 3 points at 3.45 bar (50 psi) intervals without exceeding the maximum rated working pressure of the waterway system.

7.11.5.2 Any gauge that reads off by more than 0.7 bar (10 psi) shall be recalibrated, repaired, or replaced.

7.11.6 If the waterway system is equipped with a relief valve, this relief valve shall be checked to verify that it is operational at the waterway manufacturer's recommended pressure setting.

7.12 Signs. All signs shall be inspected to verify that they are in place and legible.

7.13* Hydraulic Fluid. After the operational tests have been performed, a sample of the hydraulic fluid shall be removed from the hydraulic reservoir and subjected to spectrochemical analysis, particle count, viscosity check, and water content analysis.

7.14* Records. A comprehensive record shall be completed for all tests of the water tower and signed by the person responsible for the test.

7.14.1 When the torque verification of mounting bolts is performed as required by this standard, the bolt size, grade, and torque specifications shall be recorded.

7.14.2 When NDT is conducted, the test record shall indicate the NDT method used in each inspected area.

7.14.3 Where this standard requires measurements to be taken — such as bearing clearance and backlash, cylinder drift, relief pressure, ladder section twist, hardness readings, base rail thickness, extension brake drift, winch drift, and the like — these measurements shall be recorded in the test record so that a year-to-year comparison can be made.

Annex A Explanatory Material

Annex A is not a part of the requirements of this NFPA document but is included for informational purposes only. This annex contains explanatory material, numbered to correspond with the applicable text paragraphs.

A.3.2.1 Authority Having Jurisdiction (AHJ). The phrase "authority having jurisdiction," or its acronym AHJ, is used in NFPA documents in a broad manner, since jurisdictions and approval agencies vary, as do their responsibilities. Where public safety is primary, the authority having jurisdiction may be a federal, state, local, or other regional department or individual such as a fire chief; fire marshal; chief of a fire prevention bureau, labor department, or health department; building official; electrical inspector; or others having statutory authority. For insurance purposes, an insurance inspection department, rating bureau, or other insurance company representative may be the authority having jurisdiction. In many circumstances, the property owner or his or her designated agent assumes the role of the authority having jurisdiction; at government installations, the commanding officer or departmental official may be the authority having jurisdiction.

A.3.3.44 Instability. The lifting of a tire or stabilizer on the opposite side of the vehicle from the load does not necessarily indicate a condition of instability. Instability occurs when an aerial device can no longer support a given load and overturning is imminent.

Copyright National Fire Protection Association
Provided by IHS under license with NFPA
No reproduction or networking permitted without license from IHS
Not for Resale

A.3.3.67 Rated Vertical Height. For an aerial ladder, it is measured from the outermost rung of the outermost fly section with the ladder at maximum elevation and extension; for an elevating platform, it is measured from the top of the platform handrails with the platform raised to its position of maximum elevation and extension; and for a water tower, it is measured from the discharge end of the nozzle with the boom raised to its position of maximum elevation and extension.

A.3.3.83 Torque Box. The torque box is sometimes referred to as the torsion box or main frame and can be integrated into the chassis frame design.

A.3.3.86 Turntable. Some turntables contain an operator's control station.

A.4.1.2 Full nondestructive testing can be desirable on a more frequent basis than every five years, depending on the service to which the aerial device is subjected. Extensive use of the aerial device in urban environments would be a reason for more frequent testing. Many departments have found aerial devices damaged not by use but by transport over rough roads that wrack the device in its bed.

A.4.1.3.1 If possible, the manufacturer of the aerial device should be consulted when structural defects are revealed by the service test in this standard. The recommendations for repair that are made by the manufacturer should be followed strictly. However, if the manufacturer is no longer in business, the authority having jurisdiction must choose a repair facility to conduct the repair work. Choosing a repair facility to perform structural repair on an aerial apparatus is a process that requires a great deal of research and careful thought. Some of the items that should be considered are the following:

(1) Does the facility have past experience with the same structural repair as your aerial device needs, and will the facility provide a reference list?
(2) Does the facility have the original design, construction, and operation specifications for the make and model of your aerial device?
(3) Does the facility have in its possession written procedures for structural repair that were developed previously by the manufacturer of your aerial device?
(4) Does the facility employ an engineering staff to analyze structures and recommend structural repair methods?
(5) Will the facility provide an engineering analysis used to substantiate the structural repair method recommended?
(6) Will the facility provide an independent certification by a professional engineer of the analysis used to substantiate the recommended structural repair method?
(7) Will the facility warrant the work performed?

A.4.1.4 Specific, written checklists, which combine the manufacturer's recommended checks with the inspection procedures of this standard and any other checks found desirable by the department, should be developed by each fire department for its style and brand of apparatus to ensure a systematic and complete inspection.

A.4.1.5 Qualified vehicle operators are either those who have been schooled in the operation of the vehicle by the manufacturer or fire department instructors who have received special training in all phases of vehicle operations. Operators of fire department apparatus should complete a course in driver training and aerial ladder or elevating platform operational procedures, including positioning on the fireground. Specific training should be given in procedures to be followed should the hydraulic system fail. A thorough understanding of safe load capacity, stabilizing procedures, and operational limits is paramount. Safety procedures, proper shutdown, and boom-lowering procedures are also critical. Operators should be tested upon completion of training. Periodic retraining and retesting should also be required.

A.5.4.16.2 If the aerial device is operated for a considerable time period prior to the drift test, the hydraulic fluid temperature will be elevated. During the 1-hour test, the hydraulic fluid will cool to ambient temperature, and it can change in volume by 3 percent to 4 percent, leading to erroneous test results.

A.5.6.8 Some hollow I-beam aerial ladders' base rails have an additional layer of sheet metal spot welded to the bottom of the base rail on the bed ladder section. This additional metal is commonly known as a *glove*. Base rails constructed in this manner are susceptible to corrosion between the inside of the glove and the outside of the base rail when water is trapped in this area. This corrosion is not detected easily, as the area inside the glove cannot be inspected visually unless the glove is removed. If any corrosion or rust can be seen bleeding from the glove, the manufacturer should be contacted and the glove removed to determine whether corrosion has weakened the base rail.

A.5.8.1 A strong wind on the long cable and test load will introduce a pendulum action that will potentially add load to the ladder far beyond the test weight.

A.5.8.4.2 Figure A.5.8.4.2 diagrams such a hanger.

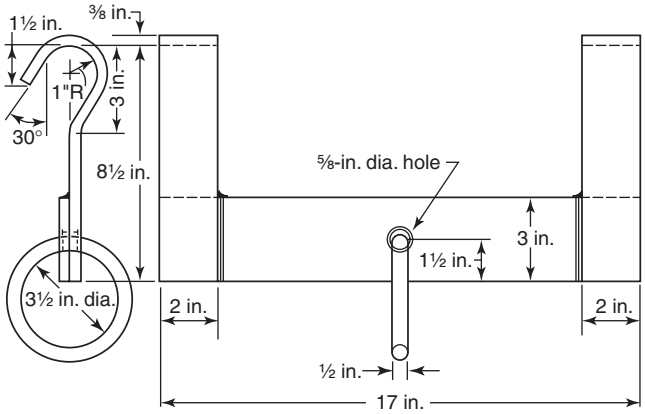

For SI units, 1 in. = 25.4 mm.

FIGURE A.5.8.4.2 Hanger for Test Cable.

A.5.8.4.8 Figure A.5.8.4.8 shows an example of a test weight container.

A.5.8.5.2 See Figure A.5.8.4.2.

A.5.9.4.1 The purpose of this test is primarily to detect water leaks in the turntable center swivel area. However, leaks in other areas also could be detected during this test.

A.5.9.4.1.2 It is recommended that a valve or restricting orifice plate be placed in the hose line where it connects to the ladder pipe intake to throttle the water entering the system. This precaution allows only a controlled flow if a component breaks during the test.

Copyright National Fire Protection Association
Provided by IHS under license with NFPA
No reproduction or networking permitted without license from IHS
Not for Resale



FIGURE A.5.8.4.8 Test Weight Container.

A.5.9.4.2 The purpose of this test is primarily to detect water leaks in the seals between the telescoping water pipes. However, leaks in other areas could also be detected during this test.

A.5.9.4.3 It is recognized that fittings could drip slightly during the test and such dripping is acceptable. However, any steady leak is a sign of a developing problem that should be corrected.

A.5.11 Spectrochemical analysis of the hydraulic fluid is intended to identify contaminants in the hydraulic system. Typically, the analysis will identify contaminants in parts per million (ppm) or by percent. Many laboratories that perform the analysis will provide service recommendations with their hydraulic fluid analysis report. In most cases, recommendations are limited unless a reference analysis has been performed. The reference analysis is an analysis of new hydraulic fluid from the fluid manufacturer/supplier prior to being put into the aerial hydraulic system. Subsequent hydraulic fluid analyses are then compared to the reference analysis. By comparing the contaminant levels, trends can be identified and can give the analyzing laboratory specific service recommendations.

A.5.12 Annex B shows a form that can be used to record the results of the inspection and test. This form can be supplemented with other data specific to the aerial device being inspected and tested.

A.6.13.3.2 It is recommended that a valve or restricting orifice plate be placed in the hose line where it connects to the elevating platform intake to throttle the water entering the system. This precaution allows only a controlled flow if a component breaks during the test.

A.6.13.3.4 It is recognized that fittings could drip slightly during the test and such dripping is acceptable. However, any steady leak is a sign of a developing problem that should be corrected.

A.6.15 See A.5.11.

A.6.16 See A.5.12.

A.7.11.3.4 It is recognized that fittings could drip slightly during the test and such dripping is acceptable. However, any steady leak is a sign of a developing problem that should be corrected.

A.7.13 See A.5.11.

A.7.14 See A.5.12.

Annex B Inspection and Test Form

This annex is not a part of the requirements of this NFPA document but is included for informational purposes only.

B.1 Figure B.1 can be useful for recording the results of the aerial device inspection and test. This form can be supplemented as necessary to record details specific to a particular aerial device.

Copyright National Fire Protection Association
Provided by IHS under license with NFPA
No reproduction or networking permitted without license from IHS
Not for Resale

AERIAL DEVICE INSPECTION AND TEST RECORD

Test date: _____ Previous test date: _____

Fire department name: _____

Type of aerial device:

❑ Aerial ladder ❑ Elevating platform ❑ Water tower

Fire department identification/designation: _____

Final stage manufacturer: _____

Chassis manufacturer: _____

Vehicle identification number: _____

Aerial device manufacturer: _____

Model of aerial device: _____

Serial number of aerial device: _____

Rated vertical height: _____

Apparatus miles: _____ Apparatus hours: _____

Aerial hours: _____

Reason for test: _____

_____

Test location: _____

Weather conditions at time of test: _____

Temperature: _____° (F) (C) Wind velocity (estimate): _____ (mph) (km/hr)

Visual Inspection (Attach Copy of any Checklist)

Comments: _____

_____

_____

Disposition of any problems: _____

_____

(NFPA 1914, 1 of 2)

FIGURE B.1 Sample Aerial Device Inspection and Test Form.

Copyright National Fire Protection Association
Provided by IHS under license with NFPA
No reproduction or networking permitted without license from IHS Not for Resale

Operational Inspection

Comments: _____

_____

_____

Disposition of any problems: _____

_____

_____

Load Test

Total weight used: _____

Comments: _____

_____

_____

Disposition of any problems: _____

_____

_____

_____

Water System Test

Comments: _____

_____

_____

Disposition of any problems: _____

_____

_____

_____

Person conducting the test: _____

Representing: _____

Signature: _____ Date: _____

(NFPA 1914, 2 of 2)

FIGURE B.1 ***Continued***

Copyright National Fire Protection Association
Provided by IHS under license with NFPA
No reproduction or networking permitted without license from IHS
Not for Resale

Annex C Informational References

C.1 Referenced Publications. (Reserved)

C.2 Informational References. (Reserved)

C.3 References for Extracts. The following documents are listed here to provide reference information, including title and edition, for extracts given throughout this standard as indicated by a reference in brackets [ ] following a section or paragraph. These documents are not a part of the requirements of this document unless also listed in Chapter 2 for other reasons.

C.3.1 NFPA Publications. National Fire Protection Association, 1 Batterymarch Park, P.O. Box 9101, Quincy, MA 02269-9101.

NFPA 54, *National Fuel Gas Code*, 2002 edition.

NFPA 70, *National Electrical Code®*, 2002 edition.

NFPA 1500, *Standard on Fire Department Occupational Safety and Health Program*, 2002 edition.

NFPA 1901, *Standard for Automotive Fire Apparatus*, 1999 edition.

NFPA 1915, *Standard for Fire Apparatus Preventive Maintenance Program*, 2000 edition.

Copyright National Fire Protection Association
Provided by IHS under license with NFPA
No reproduction or networking permitted without license from IHS
Not for Resale

Index

© 2002 National Fire Protection Association. All Rights Reserved.

The copyright in this index is separate and distinct from the copyright in the document that it indexes. The licensing provisions set forth for the document are not applicable to this index. This index may not be reproduced in whole or in part by any means without the express written permission of NFPA.

-A-

Acoustic emission testing 4.7.7
  Definition 3.3.1
Aerial device (definition) 3.3.2
Aerial ladder
  Definition 3.3.3
  Hydraulic components .....*see* Hydraulic components
  Illumination 5.6.25
  Inspections and tests ..... Chap. 5, 7.6
  Nondestructive tests (NDT) 5.1.3, 5.12.2
  Records
    Service 5.2
    Test 5.12, A.5.12
  Sections
    Alignment 5.6.4
    Definition 3.3.4
    Hydraulic, pneumatic, and electrical lines in 5.6.5
  Stabilizers .....*see* Stabilizers
  Structural modifications, improper repairs, or added weight 5.6.1
  Turntable, torque box, suspension, and tractor-drawn components 5.4
Ambient temperature (definition) 3.3.5
American Society for Nondestructive Testing (ASNT)
  Definition 3.3.6
American Welding Society (AWS)
  Definition 3.3.7
Anchor ears and plates 5.4.14, 5.6.26, 6.7.2, 6.8.12, 6.9.10
Ancillary boom ladders 6.9.2
  Definition 3.3.8
Articulating booms
  Definition 3.3.9
  Lower boom 6.7, 7.7
  Upper boom 6.8, 7.8
  Water system pressure test 6.13.3.2, 6.13.3.3, 7.11.3.2, 7.11.3.3, A.6.13.3.2
Authority having jurisdiction (definition) 3.2.1, A.3.2.1
Auxiliary hydraulic power 5.4.21
  Definition 3.3.10

-B-

Babbits 5.6.12
Base rails 5.6.8, A.5.6.8
  Definition 3.3.11
Base sections (definition) 3.3.12
Bolts
  Inspection 4.6
  Rotation-bearing mounting 5.4.1
Boom boost cylinders ..... 6.8.3 to 6.8.5
  Brackets 6.8.3
  Definition 3.3.14
  Link pins 6.8.5
Booms .....*see also* Articulating booms; Elevation cylinders; Lower booms; Telescoping booms; Upper booms
  Assemblies 6.7.5, 6.8.6, 6.9.1, 6.9.9
  Boost cylinders ..... 6.8.3 to 6.8.5
  Definition 3.3.13
  Illumination 6.6.12
  Inspection and testing ..... 6.6 to 6.9
    Load test ..... 6.12.1, 6.12.5 to 6.12.7
  Support 6.7.12
    Definition 3.3.15
Bow (definition) 3.3.16
Braces, vertical and diagonal 5.6.7
Brackets
  Boom boost cylinder 6.8.3
  Platform mounting 6.6.2
Brake holding capacity 5.6.18
Breathing air systems 5.4.29

-C-

Cables 6.7.10, 6.8.8
  Definition 3.3.17
  Extension 6.9.5
Cable separation guide 5.6.16
  Definition 3.3.18
Chain 6.7.10, 6.8.8
Chassis (definition) 3.3.19
Collector rings 5.4.13
  Definition 3.3.20
Communication system, aerial ladder 5.4.24
Controls
  Aerial ladder operating 5.4.18, 5.5.10, 5.6.30
  Elevating platform 6.6.10, 6.10, 6.11, 6.12.4
  Emergency hand-crank 5.4.20
  Throttle 5.4.23
  Tip 5.6.30
  Water tower 7.10.4
  Winch 6.6.6
Cylinder links 6.7.6
  Definition 3.3.21
Cylinder pins 5.4.15, 5.5.7, 5.6.27, 6.7.6, 6.8.5, 6.9.11, A.5.4.16.2
Cylinders .....*see also* Boom boost cylinders; Elevation cylinders; Extension cylinders
  Platform leveling 6.9.8

-D-

Defects (definition) 3.3.22
Definitions ..... Chap. 3
Deflection (definition) 3.3.23
Discontinuity (definition) 3.3.24
Diverter valve 5.5.12
  Definition 3.3.25
Drift (definition) 3.3.26
Drip (definition) 3.3.27

-E-

Eddy current inspections 4.7.8
Electrical lines 5.6.5, 6.6.4, 6.7.14, 6.8.15, 6.9.14
Elevating platform
  Booms .....*see* Booms
  Controls .....*see* Controls
  Definition 3.3.28
  Gate latches and hinge points 6.6.8
  Hinge pins 6.6.9, 6.7.1
  Hydraulic components .....*see* Hydraulic components
  Inspections and tests ..... Chap. 6
  Leveling system
    Leveling cylinders 6.9.8
    Leveling linkages 6.7.7, 6.8.2
  Load test 6.12
  Monitor and nozzle 6.6.11

Copyright National Fire Protection Association
Provided by IHS under license with NFPA
No reproduction or networking permitted without license from IHS
Not for Resale

Mounting brackets 6.6.2
Nondestructive tests (NDT) 6.1.2, 6.16.2
Pneumatic, electrical, and hydraulic lines in 6.6.4
Rated capacity identification 6.6.7
Records
Service 6.2
Test 6.16, A.6.16
Stabilizer inspection and test 6.5
Structural modifications, improper repairs, or added weight 6.6.1
Turntable and torque box inspection and test 6.4
Winch, auxiliary 6.6.5, 6.6.6
Elevation cylinders
Aerial ladder 5.4.16, A.5.4.16.2
Anchor ears and plates 5.4.14
Holding valves 5.4.17
Pins 5.4.15
Definition 3.3.29
Elevation platform
Anchor ears and plates 6.7.2, 6.8.12
Holding valves 6.7.4, 6.8.14
Indicator 6.9.6
Link pins 6.7.6
Lower boom ..... 6.7.2 to 6.7.4, 6.7.6
Upper boom ..... 6.8.12 to 6.8.14
Elevation indicators 5.6.19, 6.9.6
Definition 3.3.30
Elevation locks 5.4.10
Definition 3.3.31
Emergency hand-crank controls 5.4.20
Definition 3.3.32
Engine speed interlocks 5.4.28
Equivalency to standard 1.3
Extension and retraction motor 5.6.15
Extension cables 5.6.14, 6.9.5
Extension cylinders ..... 5.5.7 to 5.5.9, 5.6.28, 6.9.10 to 6.9.13
Anchor ears and plates 5.6.26, 6.9.10
Definition 3.3.33
Holding valves 5.5.9, 5.6.29, 6.9.13
Pins 5.5.7, 5.6.27, 6.9.11
Extension indicators 5.6.19
Definition 3.3.34
Extension locks 5.4.10
Extension sheaves 5.6.13, 6.9.4
Definition 3.3.35
Extension warning, maximum 5.6.24, 6.9.7

-F-

Fasteners 5.6.3
Definition 3.3.36
Ferromagnetic materials (definition) 3.3.37
Flowmeters 5.9.5, 6.13.4, 7.11.4
Fly locks ..... *see* Ladder locks
Fly sections (definition) 3.3.39
Folding steps 5.6.10
Fracture (definition) 3.3.40

-G-

Gate latches and hinge points 6.6.8
Ground controls, elevating platform 6.10
Guides 5.6.12, 6.9.3

-H-

Hand-crank controls ..... *see* Emergency hand-crank controls
Hardness readings ..... 4.7.6, 5.6.6(2), 5.6.8(3)
Hinge pins 5.5.7, 6.6.9, 6.7.1
Definition 3.3.41
Holding valves 5.4.17, 5.5.9, 5.6.29, 6.7.4, 6.8.14, 6.9.13
Definition 3.3.42
Hooks 6.7.11, 6.8.9
Hydraulic components
Aerial ladders ..... 5.3, 5.4.8, 5.4.9, 5.4.12, 5.4.16 to 5.4.18, 5.5.4, 5.6.5, A.5.4.16.2
Elevating platforms 6.3, 6.6.4, 6.7.8, 6.7.9, 6.8.7, 6.9.9
Water towers 7.3
Hydraulic fluid ..... 5.4.16.2(1), A.5.4.16.2
Leaks
Aerial ladders ..... 5.3, 5.4.9, 5.4.12, 5.4.16.1(2), 5.4.17, 5.4.18(1), 5.5.4
Elevating platforms 6.3, 6.7.8, 6.7.9, 6.8.7, 6.9.9
Water towers 7.3
Post-operational test analysis of 5.11, 6.15, 7.13, A.5.11
Hydraulic power, auxiliary 5.4.21
Definition 3.3.10
Hydraulic pressure, relief 5.4.25
Hydraulic pump 5.4.12

-I-

Illumination 5.6.25, 6.6.12
Indicators
Elevation 5.6.19, 6.9.6
Definition 3.3.30
Extension 5.6.19
Definition 3.3.34
Leveling 5.5.11
Lights, lower boom angle indicators 6.7.13
Load limit 5.4.19
Definition 3.3.53
Rung alignment 5.6.19
Turntable alignment 5.4.22
Definition 3.3.87
Inspect (definition) 3.3.43
Inspections and tests
Aerial ladders ..... Chap. 5
Eddy current inspections 4.7.8
Elevating platforms ..... Chap. 6
Form ..... Annex B
Frequency 4.1.1, 4.1.2, A.4.1.2
Minimum service test requirements 4.1.4, A.4.1.4
Personnel 4.1.5, 4.2, A.4.1.5
Radiographic 4.7.5
Records 5.12, 6.16, 7.14, A.5.12
Water towers ..... Chap. 7
Instability (definition) 3.3.44, A.3.3.44
Interlocks
Definition 3.3.45
Engine speed 5.4.28
Stabilizer 5.5.5
Transmission/aerial device 5.4.27
Ironing (definition) 3.3.46

-K-

Knuckle 6.7.9
Definition 3.3.47

-L-

Ladder cradle 5.6.21
Definition 3.3.48
Ladder locks 5.6.9, 5.6.20
Bed lock 5.6.22
Definition 3.3.49
Ladders
Aerial ..... *see* Aerial ladder
Ancillary boom 6.9.2
Definition 3.3.8
Leaks (definition) ..... 3.3.50; *see also* Hydraulic fluid, Leaks
Leveling indicators 5.5.11
Leveling linkages 6.7.7, 6.8.2
Definition 3.3.51
Lights, lower boom angle indicator 6.7.13

Copyright National Fire Protection Association
Provided by IHS under license with NFPA
No reproduction or networking permitted without license from IHS
Not for Resale

Lines/hoses, hydraulic ..... *see* Hydraulic components
Liquid penetrant inspections 4.7.4
Definition 3.3.52
Load limit indicators 5.4.19
Definition 3.3.53
Load tests
Aerial ladders 5.8, A.5.8.1
Elevating platform 6.12
Horizontal 5.8.4, A.5.8.4.2, A.5.8.4.8
Maximum elevation 5.8.5, A.5.8.5.2
Locks ..... *see also* Elevation locks; Extension locks; Rotation locks
Fly 5.6.20
Ladder bed 5.6.22
Manual spring 5.5.15
Lower booms
Alignment with upper boom 6.8.1
Angle indicator lights 6.7.13
Inspection and test 6.7, 7.7
Lower controls, elevating platform 6.10
Load test 6.12.4

-M-

Magnetic particle inspections 4.7.3
Definition 3.3.54
Mainframe ..... *see* Torque box
Manual spring locks 5.5.15
Manufacturer's instructions 4.1.4.1, 4.1.4.2, A.4.1.4
Maximum extension warning device 5.6.24
Metal aerial ladder ..... *see* Aerial ladder
Mobile unit (definition) 3.3.55
Monitors, elevating platform 6.6.11

-N-

Neutral position (definition) 3.3.56
Nondestructive testing (NDT)
Aerial ladders 5.1.3, 5.12.2
Definition 3.3.57
Elevating platforms 6.1.2, 6.16.2
Frequency 4.1.2, A.4.1.2
Procedures 4.7
By third-party companies 4.3
Water towers 7.1.2, 7.14.2
Weld inspection 4.5.2
Nozzle, elevating platform 6.6.11

-O-

Operating controls 5.4.18, 5.5.10, 5.6.30
Operating tests
Aerial ladder 5.7
Elevating platform
From lower controls 6.10
From platform controls 6.11
Water tower 7.10
Operators 4.1.5, A.4.1.5
Definition 3.3.58
Override (definition) 3.3.59

-P-

Pads
Stabilizers 5.5.2
Definition 3.3.77
Wear 5.6.12, 6.9.3
Personnel, inspection and testing 4.1.5, 4.2, A.4.1.5
Pins ..... *see also* Cylinder pins; Hinge pins
Inspection 4.6
Platform (definition) ..... 3.3.60; *see also* Elevating platform
Pneumatic lines 5.6.5, 6.6.4, 6.7.14, 6.8.15, 6.9.14
Definition 3.3.61
Positive stops and alignment 5.5.13
Pressure gauges 5.9.6, 6.13.5, 7.11.5
Pressure tests, water system
Aerial ladder 5.9.4, A.5.9.4
Elevating platform 6.13.3, A.6.13.3.2, A.6.13.3.4
Water tower 7.11.3
Proper(ly) (definition) 3.3.62
PTO (power takeoff) 5.4.11
Definition 3.3.63
Pulleys 6.7.11, 6.8.9
Pump, hydraulic 5.4.12
Purpose of standard 1.2

-Q-

Qualified persons 4.1.5, A.4.1.5
Definition 3.3.64

-R-

Radiography 4.7.5
Definition 3.3.65
Rails 5.6.6, 5.6.8, A.5.6.8
Rated capacity
Definition 3.3.66
Elevating platform 6.6.7
Rated vertical height (definition) 3.3.67, A.3.3.67
Records
Service 5.2, 6.2, 7.2
Test 5.12, 6.16, 7.14, A.5.12
References ..... Chap. 2, Annex C
Relief hydraulic pressure 5.4.25
Relief valves 6.13.6, 7.11.6
Definition 3.3.68
Repairs 4.1.3.1, 4.1.3.2, A.4.1.3.1
Improper 5.6.1, 6.6.1
Rods 6.7.10, 6.8.8
Rollers 5.6.11, 6.10.5
Rotation-bearing mounting bolts 5.4.1
Rotation gears
Definition 3.3.69
Inspection 5.4.5
Reduction box
Definition 3.3.70
Mounting 5.4.6
Rotation hydraulic swivel 5.4.8
Rotation locks 5.4.10
Definition 3.3.71
Rung cap casting (definition) 3.3.72
Rungs 5.6.9
Alignment indicators 5.6.19

-S-

Safety devices 6.10.3, 6.11.3
Safety stop mechanisms 5.6.23, 6.8.11
Definition 3.3.73
Scope of standard 1.1
Service records 5.2, 6.2, 7.2
Shall (definition) 3.2.2
Sheaves ..... *see* Extension sheaves
Should (definition) 3.2.3
Signs, inspection of 5.10, 6.14, 7.12
Slide blocks 5.6.12, 6.9.3
Definition 3.3.74
Slides 6.10.5
Spirit level (definition) 3.3.75
Sprockets 6.7.11, 6.8.9
Stabilizer pads 5.5.2
Definition 3.3.77
Stabilizers
Aerial ladder 5.5
Deployment 5.5.14
Diverter valve 5.5.12

Copyright National Fire Protection Association
Provided by IHS under license with NFPA
No reproduction or networking permitted without license from IHS
Not for Resale

Extension cylinders ..... 5.5.7 to 5.5.9
Hinge pins 5.5.7
Hydraulic lines and hose in 5.5.4
Interlock and warning device 5.5.5
Manual spring locks 5.5.15
Mounting to frame or torque box 5.5.3
Operating controls 5.5.10
Positive stops and alignment 5.5.13
Structural components 5.5.1
Tractor spring lockout device 5.5.16
Definition 3.3.76
Elevating platform 6.5, 6.12.1, 6.12.7
Water tower 7.5
Stabilizer shoe (definition) 3.3.78
Stressed-skin-type boom section (definition) 3.3.79
Structural damage, removal from service due to 4.1.3
Structural modifications
Aerial ladders 5.6.1
Elevating platforms 6.6.1
Suspension system inspection and tests 5.4
Frame, mounting to 5.4.4
Swivel, rotation hydraulic 5.4.8

-T-

Telescopic (definition) 3.3.80
Telescoping booms 7.11.3.1, 7.11.3.3
Ancillary ladder 6.9.2
Assemblies 6.9.1
Inspection and test 6.9, 7.9
Water system pressure test 6.13.3.1, 6.13.3.3
Tests (definition) ..... 3.3.81; *see also* Inspections and tests
Third-party companies 4.3
Throttle controls 5.4.23
Tip controls 5.6.30
Top rails 5.6.6
Definition 3.3.82
Torque box
Definition 3.3.83, A.3.3.83
Inspection and test 5.4, 6.4, 7.4, A.5.4.16.2
Mounting to frame 5.4.2
Stabilizer mounting to 5.5.3
Torque value (definition) 3.3.84
Torsion box ..... *see* Torque box
Tractor-drawn components inspection and test 5.4
Frame, mounting to 5.4.3
Tractor spring lockout device 5.5.16
Transmission/aerial device interlock 5.4.27
Trussed-lattice-type boom section (definition) 3.3.85
Turntable
Definition 3.3.86, A.3.3.86
Hydraulic lines 5.4.9
Inspection and tests ..... 5.4, 6.4, 6.10.6.1 to 6.10.6.3, 7.4, A.5.4.16.2
Structural components 5.4.7
Turntable alignment indicator 5.4.22
Definition 3.3.87
Twist (definition) 3.3.88

-U-

Ultrasonic inspections 4.7.2
Definition 3.3.89
Unit main frame 5.4.26
Upper booms
Alignment with lower boom 6.8.1
Elevation cylinder ..... 6.8.12 to 6.8.14
Hold-down device 6.8.10
Inspection and test 6.8, 7.8
Safety stop mechanism 6.8.11

-V-

Valves ..... *see also* Holding valves; Relief valves
Diverter 5.5.12
Definition 3.3.25
Visual inspection 4.4
Definition 3.3.90

-W-

Warning devices
Maximum extension 5.6.24, 6.9.7
Stabilizer 5.5.6
Water pressure gauges 5.9.6, 6.13.5, 7.11.5
Water system tests
Aerial ladder waterway system 5.9, A.5.9.4
Elevating platforms 6.13, A.6.13.3.2, A.6.13.3.4
Water tower 7.11, A.7.11.3.4
Water towers
Definition 3.3.91
Hydraulic components 7.3
Inspections and tests ..... Chap. 7
Nondestructive testing (NDT) 7.1.2, 7.14.2
Records
Service 7.2
Test 7.14, A.7.14
Waterway system test, aerial ladders 5.9, A.5.9.4
Wear strips and pads 5.6.12, 6.9.3
Weight, added 5.6.1, 6.6.1
Weld inspection 4.5, 5.6.2, 6.12.7
Weldments 5.6.2
Definition 3.3.92
Winch
Controls 6.6.6
Holding capacity 5.6.17
Mounting 6.6.5

Copyright National Fire Protection Association
Provided by IHS under license with NFPA
No reproduction or networking permitted without license from IHS
Not for Resale