NFPA 1911

Standard for the Inspection, Maintenance, Testing, and Retirement of In-Service Automotive Fire Apparatus

2007 Edition

NFPA, 1 Batterymarch Park, Quincy, MA 02169-7471
An International Codes and Standards Organization

Copyright National Fire Protection Association
Provided by IHS under license with NFPA
No reproduction or networking permitted without license from IHS
Not for Resale

IMPORTANT NOTICES AND DISCLAIMERS CONCERNING NFPA DOCUMENTS

NOTICE AND DISCLAIMER OF LIABILITY CONCERNING THE USE OF NFPA DOCUMENTS

NFPA codes, standards, recommended practices, and guides, of which the document contained herein is one, are developed through a consensus standards development process approved by the American National Standards Institute. This process brings together volunteers representing varied viewpoints and interests to achieve consensus on fire and other safety issues. While the NFPA administers the process and establishes rules to promote fairness in the development of consensus, it does not independently test, evaluate, or verify the accuracy of any information or the soundness of any judgments contained in its codes and standards.

The NFPA disclaims liability for any personal injury, property or other damages of any nature whatsoever, whether special, indirect, consequential or compensatory, directly or indirectly resulting from the publication, use of, or reliance on this document. The NFPA also makes no guaranty or warranty as to the accuracy or completeness of any information published herein.

In issuing and making this document available, the NFPA is not undertaking to render professional or other services for or on behalf of any person or entity. Nor is the NFPA undertaking to perform any duty owed by any person or entity to someone else. Anyone using this document should rely on his or her own independent judgment or, as appropriate, seek the advice of a competent professional in determining the exercise of reasonable care in any given circumstances.

The NFPA has no power, nor does it undertake, to police or enforce compliance with the contents of this document. Nor does the NFPA list, certify, test or inspect products, designs, or installations for compliance with this document. Any certification or other statement of compliance with the requirements of this document shall not be attributable to the NFPA and is solely the responsibility of the certifier or maker of the statement.

--`,,```,,,,````-`-`,,`,,`,`,,`---

Copyright National Fire Protection Association
Provided by IHS under license with NFPA
No reproduction or networking permitted without license from IHS

Not for Resale

ADDITIONAL NOTICES AND DISCLAIMERS

Updating of NFPA Documents

Users of NFPA codes, standards, recommended practices, and guides should be aware that these documents may be superseded at any time by the issuance of new editions or may be amended from time to time through the issuance of Tentative Interim Amendments. An official NFPA document at any point in time consists of the current edition of the document together with any Tentative Interim Amendments and any Errata then in effect. In order to determine whether a given document is the current edition and whether it has been amended through the issuance of Tentative Interim Amendments or corrected through the issuance of Errata, consult appropriate NFPA publications such as the National Fire Codes® Subscription Service, visit the NFPA website at www.nfpa.org, or contact the NFPA at the address listed below.

Interpretations of NFPA Documents

A statement, written or oral, that is not processed in accordance with Section 6 of the Regulations Governing Committee Projects shall not be considered the official position of NFPA or any of its Committees and shall not be considered to be, nor be relied upon as, a Formal Interpretation.

Patents

The NFPA does not take any position with respect to the validity of any patent rights asserted in connection with any items which are mentioned in or are the subject of NFPA codes, standards, recommended practices, and guides, and the NFPA disclaims liability for the infringement of any patent resulting from the use of or reliance on these documents. Users of these documents are expressly advised that determination of the validity of any such patent rights, and the risk of infringement of such rights, is entirely their own responsibility.

NFPA adheres to applicable policies of the American National Standards Institute with respect to patents. For further information contact the NFPA at the address listed below.

Law and Regulations

Users of these documents should consult applicable federal, state, and local laws and regulations. NFPA does not, by the publication of its codes, standards, recommended practices, and guides, intend to urge action that is not in compliance with applicable laws, and these documents may not be construed as doing so.

Copyrights

This document is copyrighted by the NFPA. It is made available for a wide variety of both public and private uses. These include both use, by reference, in laws and regulations, and use in private self-regulation, standardization, and the promotion of safe practices and methods. By making this document available for use and adoption by public authorities and private users, the NFPA does not waive any rights in copyright to this document.

Use of NFPA documents for regulatory purposes should be accomplished through adoption by reference. The term “adoption by reference” means the citing of title, edition, and publishing information only. Any deletions, additions, and changes desired by the adopting authority should be noted separately in the adopting instrument. In order to assist NFPA in following the uses made of its documents, adopting authorities are requested to notify the NFPA (Attention: Secretary, Standards Council) in writing of such use. For technical assistance and questions concerning adoption of NFPA documents, contact NFPA at the address below.

For Further Information

All questions or other communications relating to NFPA codes, standards, recommended practices, and guides and all requests for information on NFPA procedures governing its codes and standards development process, including information on the procedures for requesting Formal Interpretations, for proposing Tentative Interim Amendments, and for proposing revisions to NFPA documents during regular revision cycles, should be sent to NFPA headquarters, addressed to the attention of the Secretary, Standards Council, NFPA, 1 Batterymarch Park, P.O. Box 9101, Quincy, MA 02269-9101.

For more information about NFPA, visit the NFPA website at www.nfpa.org.

-`,,```,,,,````-`-`,,`,,`,`,,`---

Copyright National Fire Protection Association
Provided by IHS under license with NFPA
No reproduction or networking permitted without license from IHS

Not for Resale

Copyright © 2007 National Fire Protection Association. All Rights Reserved.

NFPA 1911

Standard for the

Inspection, Maintenance, Testing, and Retirement of In-Service Automotive Fire Apparatus

2007 Edition

This edition of NFPA 1911, *Standard for the Inspection, Maintenance, Testing, and Retirement of In-Service Automotive Fire Apparatus*, was prepared by the Technical Committee on Fire Department Apparatus. It was issued by the Standards Council on December 1, 2006, with an effective date of December 20, 2006, and supersedes all previous editions.

This edition of NFPA 1911 was approved as an American National Standard on December 20, 2006.

Origin and Development of NFPA 1911

This edition of NFPA 1911, *Standard for the Inspection, Maintenance, Testing, and Retirement of In-Service Automotive Fire Apparatus*, is a combination of three standards: NFPA 1911, *Standard for Service Tests of Fire Pump Systems on Fire Apparatus;* NFPA 1914, *Standard for Testing Fire Department Aerial Devices;* and NFPA 1915, *Standard for Fire Apparatus Preventive Maintenance Program*, into a single document. A chapter has been added on the retirement of fire apparatus. The out-of-service criteria in NFPA 1915 have been reevaluated to define some conditions that require the fire apparatus to be taken out of service immediately and some conditions that a technician needs to evaluate on a case-by-case basis to determine if the apparatus is safe for continued use. The term "service test" has been changed to "performance test," and new testing requirements have been added for the apparatus chassis, low voltage electrical system, foam proportioning system, compressed air foam system, line voltage electrical system, and breathing air compressor system.

History of NFPA 1911.

The first edition of NFPA 1911 was issued in 1987 and was titled *Standard on Acceptance and Service Tests of Fire Department Pumping Apparatus*. It incorporated much of the material formerly included in the pamphlet *Fire Department Pumper Tests and Fire Stream Tables*, published by the National Board of Fire Underwriters and later by the Insurance Services Office.

In 1991, the requirements for the testing of fire pumps on new fire apparatus were transferred to the standards for new fire apparatus. Material previously referenced from other documents was added to make this document self-contained. The requirements were changed to include pumps of 250 gpm (1000 L/min) and larger capacity rated at 150 psi (1000 kPa).

The 1997 edition expanded the tables to include data for pumps to 3000 gpm (12,000 L/min), added accuracy requirements for flow and speed measuring equipment, and required a tank-to-pump flow-rate check. The name of the standard was changed to *Standard for Service Tests of Fire Pump Systems on Fire Apparatus* to reflect that components of the pumping system, such as the tank-to-pump piping, were being checked.

The 2002 edition added requirements for testing the priming device, the intake relief valve system, and, for pumps rated at 750 gpm (3000 L/min) or more, the pumping engine overload capability.

History of NFPA 1914.

The first edition of NFPA 1914 dates to 1954, when the Fire Department Equipment Committee presented a document titled *Standard Procedure for Aerial Ladder Testing* and was designated as NFPA 193 for tentative adoption. In 1955, it received final adoption. The document contained separate tests for wood and metal aerial ladders.

In 1958, material covering the use, maintenance, and testing of in-service ground ladders was added to the document, and a single procedure for testing both wood and metal aerial ladders was approved. The 1959 edition added requirements for new aluminum ground ladders for fire department use. The 1972 edition introduced tests for evaluating platforms.

Copyright National Fire Protection Association
Provided by IHS under license with NFPA
No reproduction or networking permitted without license from IHS
Not for Resale

In 1975, NFPA 193 was separated into two documents, one for aerial ladders and the other for ground ladders. The new *Recommended Practice for the Maintenance, Care, Testing, and Use of Fire Department Aerial Ladders and Elevating Platforms* was designated as NFPA 1904. The ground ladders were covered in NFPA 1931, *Standard on Fire Department Ground Ladders*.

A complete revision in 1980 changed the document to a standard and renamed it *Standard for Testing Fire Department Aerial Ladders and Elevating Platforms*. In 1988, more details on required inspections were included and requirements for nondestructive testing of critical components and the testing of water towers were added. The document was renumbered and renamed NFPA 1914, *Standard for Testing Fire Department Aerial Devices*.

The 1991 edition added clarification to the acceptance criteria for weld and other nondestructive testing inspections, revised the requirements for water system tests, and included required testing of additional components of the aerial devices. The 1997 edition added text to provide repair recommendations when the manufacturer is no longer in business, required that free weights be used in testing, allowed for acoustic emission testing, added requirements for testing secondary operating controls, and added a suggested form for recording the inspection and test results.

The 2002 edition revised the qualifications for testing personnel, added additional requirements for the inspection and testing of tractor-drawn components, and more clearly delineated when nondestructive testing is required in addition to the inspections, operational tests, and load tests.

History of NFPA 1915.

The National Transportation Safety Board (NTSB) report "Special Investigation Report—Emergency Fire Apparatus," adopted March 19, 1991, raised concerns about the quality and type of service and repair being done on fire apparatus. Subsequent inquiries from the Federal Department of Transportation (DOT) about the different types, uses, and weights of apparatus and how they are maintained prompted the International Association of Fire Chiefs (IAFC) Apparatus Maintenance Section to petition NFPA to write a preventive maintenance standard for fire apparatus. While NFPA 1500, *Standard on Fire Department Occupational Safety and Health Program*, requires fire departments to establish a preventive maintenance program for their apparatus and equipment, there was no standard for such a program.

The first edition of NFPA 1915, *Standard for Fire Apparatus Preventive Maintenance Program*, was issued in 2000 to establish the minimum requirements for a preventive maintenance program for fire apparatus. These requirements were designed to improve the safety and reliability of fire apparatus and support the requirements in other NFPA standards related to emergency vehicle maintenance programs.

Copyright National Fire Protection Association
Provided by IHS under license with NFPA
No reproduction or networking permitted without license from IHS
Not for Resale

Technical Committee on Fire Department Apparatus

Jeffrey Bowman, *Chair*
San Diego Fire Department, CA [U]

Kenneth L. Koch, *Secretary*
Sutphen Corporation, OH [M]

William M. Ballantyne, Hypro LLC, MN [M]
Rep. Fire Apparatus Manufacturers Association
Robert J. Barraclough, Plano, TX [SE]
Peter F. Darley, W. S. Darley & Company, IL [M]
Rep. National Truck Equipment Association
Ralph Dorio, Insurance Services Office, NJ [I]
Donald L. Frazeur, Los Angeles Fire Department, CA [U]
Gordon L. Gholson, California Department of Forestry and Fire Protection, CA [U]
Gary Handwerk, Hale Products Incorporated, FL [M]
Tom Hillenbrand, Underwriters Laboratories Incorporated, IL [RT]
James J. Juneau, Juneau, Boll & Ward, P.L.L.C., TX [SE]
James L. Kelker, National Testing/Conam Inspection Incorporated, OH [RT]
J. Roger Lackore, Pierce Manufacturing Incorporated, WI [M]
William McCombs, Emergency One, Incorporated, FL [M]
John W. McDonald, U.S. General Services Administration, VA [E]
Dan W. McKenzie, U.S. Department of Agriculture, CA [RT]
W. Kenneth Menke, Fire Service Research Institute, MO [SE]
J. Allen Metheny, Sr., Hartly Volunteer Fire Company, DE [U]
Rep. National Volunteer Fire Council
Tom Mettler, Waterous Company, MN [M]
Jeff Piechura, Northwest Fire District, AZ [U]
Gary R. Pope, Fairfax County Fire and Rescue Department, VA [U]
James A. Salmi, Crimson Fire, PA [M]
Alan Saulsbury, Fire Spec Services, Incorporated, NY [SE]
Thomas A. Stalnaker, Goshen Fire Company, PA [U]
John M. Terefinko, KME Fire Apparatus, PA [M]
Robert D. Tutterow, Jr., Charlotte Fire Department, NC [U]
William von Zehle, Jr., Ridgefield, CT [U]
Rep. International Association of Fire Chiefs
David White, Fire & Safety Specialists, Incorporated, TX [SE]

Alternates

Robert T. Bettenhausen, Tinley Park Volunteer Fire Department, IL [U]
(Alt. to W. von Zehle, Jr.)
James T. Currin, KME Fire Apparatus, VA [M]
(Alt. to J. M. Terefinko)
Andrew L. Duke, Fairfax County Fire and Rescue Department, VA [U]
(Alt. to G. R. Pope)
Ronald L. Ewers, Class I, FL [M]
(Alt. to G. Handwerk)
David V. Haston, U.S. Department of Agriculture, CA [RT]
(Alt. to D. W. McKenzie)
James Johannessen, Underwriters Laboratories Incorporated, PA [RT]
(Alt. to T. Hillenbrand)
Brad C. Kobielusz, Poudre Fire Authority, CO [U]
(Alt. to R. D. Tutterow, Jr.)
Madhu Manikkam, Emergency One, Incorporated, FL [M]
(Alt. to W. McCombs)
Thomas H. McCullough II, VFIS Claims Management, Incorporated, PA [I]
(Alt. to VFIS Rep.)
Michael R. Moore, Pierce Manufacturing Incorporated, WI [M]
(Alt. to J. R. Lackore)
W. Michael Pietsch, Mike Pietsch, P.E. Consulting Services, Incorporated, TX [SE]
(Alt. to D. White)
Michael C. Ruthy, W. S. Darley & Company, WI [M]
(Alt. to P. F. Darley)
Thomas G. Stites, Sutphen Corporation, OH [M]
(Alt. to K. L. Koch)
Edward F. Straw, Insurance Services Office, Incorporated, GA [I]
(Alt. to R. Dorio)
Robert F. Stroud, U.S. Department of the Interior, ID [U]
(Alt. to G. L. Gholson)
Phillip L. Turner, Super Vacuum Manufacturing Company, Incorporated, CO [M]
(Alt. to W. M. Ballantyne)
Dean David Ulrich, Los Angeles City Fire Department, CA [U]
(Alt. to D. L. Frazeur)

Nonvoting

Howard L. McMillen, Fort Worth, TX
(Member Emeritus)

Carl E. Peterson, NFPA Staff Liaison

This list represents the membership at the time the Committee was balloted on the final text of this edition. Since that time, changes in the membership may have occurred. A key to classifications is found at the back of the document.

NOTE: Membership on a committee shall not in and of itself constitute an endorsement of the Association or any document developed by the committee on which the member serves.

Committee Scope: This Committee shall have primary responsibility for documents on the design and performance of fire apparatus for use by the fire service.

Copyright National Fire Protection Association
Provided by IHS under license with NFPA
No reproduction or networking permitted without license from IHS
Not for Resale

Contents

Chapter 1 Administration **1911–** 7
1.1 Scope **1911–** 7
1.2 Purpose **1911–** 7
1.3 Application **1911–** 7
1.4 Equivalency **1911–** 7
1.5 Units and Formulas **1911–** 7

Chapter 2 Referenced Publications **1911–** 7
2.1 General **1911–** 7
2.2 NFPA Publications **1911–** 7
2.3 Other Publications **1911–** 7
2.4 References for Extracts in Mandatory Sections **1911–** 8

Chapter 3 Definitions **1911–** 8
3.1 General **1911–** 8
3.2 NFPA Official Definitions **1911–** 8
3.3 General Definitions **1911–** 8

Chapter 4 General Requirements **1911–** 12
4.1 General **1911–** 12
4.2 Taking Fire Apparatus Out of Service **1911–** 13
4.3 Qualifications of Personnel **1911–** 13
4.4 Safety **1911–** 13
4.5 Inspections and Maintenance **1911–** 13
4.6 Maintenance and Repairs **1911–** 13
4.7 Documentation **1911–** 13

Chapter 5 Retirement of Fire Apparatus **1911–** 14
5.1 General **1911–** 14

Chapter 6 Out-of-Service Criteria **1911–** 14
6.1 General **1911–** 14
6.2 Driving and Crew Areas, Apparatus Body, and Compartmentation **1911–** 14
6.3 Chassis, Axles, Steering and Suspension Systems, Driveline, Wheels, and Tires **1911–** 14
6.4 Engine Systems **1911–** 15
6.5 Engine Cooling System **1911–** 15
6.6 Transmission and Clutch **1911–** 15
6.7 Low Voltage and Line Voltage Electrical Systems **1911–** 15
6.8 Braking Systems **1911–** 15
6.9 Fire Pump System **1911–** 16
6.10 Aerial Device Systems **1911–** 16

Chapter 7 Inspection and Maintenance of the Chassis, Driving and Crew Compartment, and Body **1911–** 17
7.1 General **1911–** 17
7.2 Frame and Suspension **1911–** 17
7.3 Axles, Tires, and Wheels **1911–** 17
7.4 Engine **1911–** 17
7.5 Engine Cooling System **1911–** 17
7.6 Engine Fuel System **1911–** 17
7.7 Engine Air Intake System **1911–** 18
7.8 Engine Exhaust System **1911–** 18
7.9 Transmission **1911–** 18
7.10 Driveline **1911–** 18
7.11 Steering System **1911–** 18
7.12 Braking System **1911–** 19
7.13 Chassis Air-Powered Accessories **1911–** 20
7.14 Crew and Passenger Compartments **1911–** 20
7.15 Body and Compartmentation **1911–** 20
7.16 Powered Equipment Racks **1911–** 20

Chapter 8 Inspection and Maintenance of Low Voltage Electrical Systems **1911–** 20
8.1 General **1911–** 20
8.2 Starting System **1911–** 21
8.3 Wiring **1911–** 21
8.4 Batteries **1911–** 21
8.5 Charging System **1911–** 21
8.6 Ignition System **1911–** 21
8.7 Automatic Electrical Load Management System **1911–** 21
8.8 Miscellaneous Electrical Components **1911–** 21
8.9 Apparatus Lighting **1911–** 21
8.10 Work Lighting **1911–** 21
8.11 Electrical Accessories **1911–** 21
8.12 Warning Devices **1911–** 21

Chapter 9 Inspection and Maintenance of Water Pumping Systems and Water Tanks **1911–** 22
9.1 General **1911–** 22
9.2 Fire Pump, Auxiliary Pump, Industrial Pump, and Transfer Pump **1911–** 22
9.3 Water Tanks **1911–** 22

Chapter 10 Inspection and Maintenance of Aerial Devices **1911–** 22
10.1 General **1911–** 22
10.2 Inspection **1911–** 22
10.3 Maintenance **1911–** 22
10.4 Air Storage Systems **1911–** 22

Chapter 11 Inspection and Maintenance of Foam Proportioning Systems **1911–** 22
11.1 General **1911–** 22
11.2 System Components **1911–** 22
11.3 Cleaning **1911–** 23
11.4 Instrumentation and Controls **1911–** 23
11.5 Strainer or Filter **1911–** 23
11.6 Foam Concentrate Pump **1911–** 23
11.7 Foam Concentrate or Foam Solution Tanks **1911–** 23

Copyright National Fire Protection Association
Provided by IHS under license with NFPA
No reproduction or networking permitted without license from IHS
Not for Resale

11.8 Diagnostic Check 1911– 23

Chapter 12 Inspection and Maintenance of Compressed Air Foam Systems (CAFS) **1911–** 23
12.1 General 1911– 23
12.2 System Components 1911– 23
12.3 Compressed Air Source 1911– 23

Chapter 13 Inspection and Maintenance of Line Voltage Electrical Systems **1911–** 24
13.1 General 1911– 24
13.2 Power Source 1911– 24
13.3 Wiring 1911– 24
13.4 Appliances and Controls 1911– 24
13.5 Circuit Protection 1911– 24
13.6 Instrumentation 1911– 24
13.7 Engine-Driven Generators 1911– 24
13.8 Power Takeoff (PTO)–Driven Line Voltage Generators 1911– 24
13.9 Hydraulic-Driven Line Voltage Generators 1911– 24
13.10 Belt-Driven Line Voltage Generators ... 1911– 24

Chapter 14 Inspection and Maintenance of Utility Air and Breathing Air Systems **1911–** 24
14.1 General 1911– 24
14.2 System Components 1911– 25
14.3 Labels 1911– 25
14.4 Piping, Hose, Valves, and Instrumentation 1911– 25
14.5 Air Compressors 1911– 25
14.6 Purification System 1911– 25
14.7 Air Storage Tanks 1911– 25
14.8 Refill Stations 1911– 25
14.9 Air Compressor 1911– 25
14.10 Records 1911– 25

Chapter 15 Inspection and Maintenance of Winch Systems **1911–** 26
15.1 General 1911– 26
15.2 Winch Assembly 1911– 26
15.3 Winch Wire or Synthetic Rope 1911– 26
15.4 Power Supply and Controls 1911– 26
15.5 Attachment Points 1911– 26

Chapter 16 Road Tests and Annual Weight Verification **1911–** 26
16.1 General 1911– 26
16.2 Fire Apparatus Axle Weight Test 1911– 26
16.3 Braking System 1911– 26
16.4 Parking Brake System 1911– 26
16.5 Road Test 1911– 27

Chapter 17 Performance Testing of Low Voltage Electrical Systems **1911–** 27
17.1 General 1911– 27
17.2 Frequency 1911– 27
17.3 Battery Test 1911– 27
17.4 Starter Wiring Test 1911– 28
17.5 Alternator Test 1911– 28
17.6 Regulator Test 1911– 28
17.7 Battery Charger/Conditioner Test 1911– 29
17.8 Total Continuous Electrical Load Test 1911– 29
17.9 Solenoid and Relay Test 1911– 29

Chapter 18 Performance Testing of Fire Pumps and Industrial Supply Pumps **1911–** 29
18.1 General 1911– 29
18.2 Frequency 1911– 29
18.3 Test Site 1911– 29
18.4 Environmental Conditions 1911– 30
18.5 Equipment 1911– 30
18.6 Conditions for Test 1911– 35
18.7 Procedure 1911– 35
18.8 Test Results 1911– 39

Chapter 19 Performance Testing of Aerial Devices **1911–** 39
19.1 General 1911– 39
19.2 Inspection Personnel 1911– 39
19.3 Third-Party Test Companies 1911– 40
19.4 Visual Inspection 1911– 40
19.5 Weld Inspection 1911– 40
19.6 Bolt and Pin Inspection 1911– 40
19.7 Nondestructive Testing Procedures 1911– 40
19.8 Inspecting and Testing Aerial Ladders 1911– 40
19.9 Inspecting and Testing Elevating Platforms 1911– 48
19.10 Inspecting and Testing Water Towers 1911– 53

Chapter 20 Performance Testing of Foam Proportioning Systems **1911–** 54
20.1 General 1911– 54
20.2 Performance Level 1911– 54
20.3 Testing Methods 1911– 54
20.4 Multiple Concentrate Systems 1911– 54
20.5 Accuracy Level 1911– 54

Chapter 21 Performance Testing of Compressed Air Foam Systems (CAFS) **1911–** 54
21.1 General 1911– 54
21.2 Frequency 1911– 54
21.3 Inspection 1911– 54
21.4 Test Method 1911– 54

Copyright National Fire Protection Association
Provided by IHS under license with NFPA
No reproduction or networking permitted without license from IHS
Not for Resale

Chapter 22 Performance Testing of Line Voltage Electrical Systems **1911–** 55
22.1 General **1911–** 55
22.2 Frequency **1911–** 55
22.3 Power Source Testing **1911–** 55
22.4 Receptacle Wiring **1911–** 56
22.5 GFCI Testing **1911–** 56
22.6 Line Voltage Equipment Testing **1911–** 56
22.7 Full Load Test of Power Source **1911–** 56
22.8 Dielectric Voltage Withstand Test **1911–** 56

Chapter 23 Performance Testing of Breathing Air Compressor Systems **1911–** 56
23.1 General **1911–** 56
23.2 Air Quality **1911–** 57
23.3 Records **1911–** 57

Annex A Explanatory Material **1911–** 57

Annex B Conducting Pumping Tests **1911–** 70

Annex C Developing a Preventive Maintenance Program **1911–** 75

Annex D Guidelines for First-Line and Reserve Fire Apparatus **1911–** 96

Annex E Informational References **1911–** 98

Index **1911–** 99

Copyright National Fire Protection Association
Provided by IHS under license with NFPA
No reproduction or networking permitted without license from IHS
Not for Resale

NFPA 1911

Standard for the

Inspection, Maintenance, Testing, and Retirement of In-Service Automotive Fire Apparatus

2007 Edition

IMPORTANT NOTE: This NFPA document is made available for use subject to important notices and legal disclaimers. These notices and disclaimers appear in all publications containing this document and may be found under the heading "Important Notices and Disclaimers Concerning NFPA Documents." They can also be obtained on request from NFPA or viewed at www.nfpa.org/disclaimers.

NOTICE: An asterisk (*) following the number or letter designating a paragraph indicates that explanatory material on the paragraph can be found in Annex A.

A reference in brackets [ ] following a section or paragraph indicates material that has been extracted from another NFPA document. As an aid to the user, the complete title and edition of the source documents for extracts in mandatory sections of the document are given in Chapter 2 and those for extracts in informational sections are given in Annex E. Editorial changes to extracted material consist of revising references to an appropriate division in this document or the inclusion of the document number with the division number when the reference is to the original document. Requests for interpretations or revisions of extracted text shall be sent to the technical committee responsible for the source document.

Information on referenced publications can be found in Chapter 2 and Annex E.

Chapter 1 Administration

1.1 Scope.

1.1.1 This standard defines the minimum requirements for establishing an inspection, maintenance, and testing program for in-service fire apparatus.

1.1.2 This standard includes guidelines for fire apparatus refurbishment and retirement.

1.1.3 This standard identifies the systems and items on a fire apparatus that are to be inspected and maintained, the frequency of such inspections and maintenance, and the requirements and procedures for conducting performance tests on components.

1.1.4 This standard provides sample forms for collecting inspection and test data.

1.2 Purpose.

1.2.1 The primary purpose of this standard is to provide requirements for an inspection, maintenance, and testing program that will ensure that in-service fire apparatus are serviced and maintained to keep them in safe operating condition and ready for response at all times.

1.2.2 The secondary purpose of this standard is to establish that safety is a primary concern for the continued in-service use of a fire apparatus and the ultimate decision to refurbish or retire that fire apparatus.

1.2.3 It is not the intent of this standard to restrict any jurisdiction from exceeding the minimum requirements described in this document.

1.3 Application.

1.3.1 This standard shall apply to public or private organizations utilizing fire apparatus.

1.3.2 This standard shall apply to all in-service fire apparatus, regardless of the year of manufacture.

1.3.3 This standard shall apply to permanently installed components on fire apparatus.

1.3.4 This standard shall not apply to portable equipment carried on fire apparatus unless otherwise stated in specific requirements.

1.3.5 The provisions of this standard shall not supersede any instructions, specifications, or practices defined or required by the fire apparatus manufacturer, component manufacturer, equipment manufacturer, or authority having jurisdiction.

1.4 Equivalency. Nothing in this standard is intended to prevent the use of systems, methods, or devices of equivalent or superior quality, strength, fire resistance, effectiveness, durability, and safety over those prescribed by this standard.

1.4.1 Technical documentation shall be submitted to the authority having jurisdiction to demonstrate equivalency.

1.4.2 The system, method, or device shall be approved for the intended purpose by the authority having jurisdiction.

1.5* Units and Formulas.

1.5.1 In this standard, values for measurement in inch-pound units are followed by an equivalent in metric units.

1.5.2 Either set of values shall be permitted to be used, but the same set of values (either inch-pound units or metric units) shall be used consistently.

Chapter 2 Referenced Publications

2.1 General. The documents or portions thereof listed in this chapter are referenced within this standard and shall be considered part of the requirements of this document.

2.2 NFPA Publications. National Fire Protection Association, 1 Batterymarch Park, Quincy, MA 02169-7471.

NFPA 1071, *Standard for Emergency Vehicle Technician Professional Qualifications,* 2006 edition.

NFPA 1901, *Standard for Automotive Fire Apparatus,* 2003 edition.

NFPA 1989, *Standard on Breathing Air Quality for Fire and Emergency Services Respiratory Protection,* 2003 edition.

2.3 Other Publications.

2.3.1 ASME Publications. American Society of Mechanical Engineers, Three Park Avenue, New York, NY 10016-5990.

ASME B40.100, *Pressure Gauges and Gauge Attachments*, 2005.

Copyright National Fire Protection Association
Provided by IHS under license with NFPA
No reproduction or networking permitted without license from IHS
Not for Resale

2.3.2 ASNT Publications. American Society for Nondestructive Testing, Inc., 1711 Arlingate Lane, Columbus, OH 43228-0518.

ASNT CP-189, *Standard for Qualification and Certification of Nondestructive Testing Personnel*, 2001.

2.3.3 ASTM Publications. ASTM International, 100 Barr Harbor Drive, P.O. Box C700, West Conshohocken, PA 19428-2959.

ASTM B 647, *Standard Test Method for Indentation Hardness of Aluminum Alloys by Means of a Webster Hardness Gage*, 1984 (reconfirmed 2006).

ASTM B 648, *Standard Test Method for Indentation Hardness of Aluminum Alloys by Means of a Barcol Impressor*, 1978 (reconfirmed 2006).

ASTM E 6, *Standard Terminology Relating to Methods of Mechanical Testing*, 2006.

ASTM E 10, *Standard Test Method for Brinell Hardness of Metallic Materials*, 2001.

ASTM E 18, *Standard Test Methods for Rockwell Hardness and Rockwell Superficial Hardness of Metallic Materials*, 2005.

ASTM E 92, *Standard Test Method for Vickers Hardness of Metallic Materials*, 1982 (reconfirmed 2003).

ASTM E 114, *Standard Practice for Ultrasonic Pulse-Echo Straight-Beam Examination by the Contact Method*, 1995 (reconfirmed 2005).

ASTM E 165, *Standard Test Method for Liquid Penetrant Examination*, 2002.

ASTM E 569, *Standard Practice for Acoustic Emission Monitoring of Structures During Controlled Stimulation*, 2002.

ASTM E 650, *Standard Guide for Mounting Piezoelectric Acoustic Emission Sensors*, 1997 (reconfirmed 2002).

ASTM E 709, *Standard Guide for Magnetic Particle Examination*, 2001.

ASTM E 797, *Standard Practice for Measuring Thickness by Manual Ultrasonic Pulse-Echo Contact Method*, 2005.

ASTM E 1004, *Standard Practice for Determining Electrical Conductivity Using the Electromagnetic (Eddy-Current) Method*, 2002.

ASTM E 1220, *Standard Test Method for Visible Penetrant Examination Using the Solvent-Removable Process*, 2005.

ASTM E 1316, *Standard Terminology for Nondestructive Testing*, 2006.

ASTM E 1418, *Standard Test Method for Visible Penetrant Examination Using the Water-Washable Process*, 2005.

2.3.4 AWS Publications. American Welding Society, 550 N.W. LeJeune Road, Miami, FL 33126.

AWS B1.10, *Guide for the Nondestructive Examination of Welds*, 1999.

AWS D1.1, *Structural Welding Code — Steel*, 2005.

AWS D1.2, *Structural Welding Code — Aluminum*, 2003.

2.3.5 ISO Publications. International Organization for Standardization, 1 rue de Varembé, Case postale 56, CH-1211 Genève 20, Switzerland.

ISO/IEC 17020, *General criteria for the operation of various types of bodies performing inspection*, 1998.

2.3.6 SAE Publications. Society of Automotive Engineers, 400 Commonwealth Drive, Warrendale, PA 15096.

SAE J959, *Lifting Crane, Wire-Rope Strength Factors*, 1991.

2.3.7 U.S. Government Publications. U.S. Government Printing Office, Washington, DC 20402.

Title 49, Code of Federal Regulations, Part 399.211, Appendix G, "Minimum Periodic Inspection Standards," 1988.

2.3.8 Other Publications.

Merriam-Webster's Collegiate Dictionary, 11th edition, Merriam-Webster, Inc., Springfield, MA, 2003.

2.4 References for Extracts in Mandatory Sections.

NFPA 70, *National Electrical Code®*, 2005 edition.
NFPA 99, *Standard for Health Care Facilities,* 2005 edition.
NFPA 414, *Standard for Aircraft Rescue and Fire-Fighting Vehicles,* 2007 edition.
NFPA 1451, *Standard for a Fire Service Vehicle Operations Training Program,* 2007 edition.
NFPA 1901, *Standard for Automotive Fire Apparatus,* 2003 edition.
NFPA 1912, *Standard for Fire Apparatus Refurbishing,* 2006 edition.

Chapter 3 Definitions

3.1 General. The definitions contained in this chapter shall apply to the terms used in this standard. Where terms are not defined in this chapter or within another chapter, they shall be defined using their ordinarily accepted meanings within the context in which they are used. *Merriam-Webster's Collegiate Dictionary,* 11th edition, shall be the source for the ordinarily accepted meaning.

3.2 NFPA Official Definitions.

3.2.1* Approved. Acceptable to the authority having jurisdiction.

3.2.2* Authority Having Jurisdiction (AHJ). An organization, office, or individual responsible for enforcing the requirements of a code or standard, or for approving equipment, materials, an installation, or a procedure.

3.2.3 Shall. Indicates a mandatory requirement.

3.2.4 Should. Indicates a recommendation or that which is advised but not required.

3.3 General Definitions.

3.3.1 Acoustic Emission Inspection. A method of nondestructive testing (NDT) that utilizes acoustic or sound waves.

3.3.2 Adjust. To maintain or regulate, within prescribed limits, by setting the operating characteristics to specified parameters.

3.3.3 Aerial Device. An aerial ladder, elevating platform, or water tower that is designed to position personnel, handle materials, provide continuous egress, or discharge water. [**1901,** 2003]

Copyright National Fire Protection Association
Provided by IHS under license with NFPA
No reproduction or networking permitted without license from IHS
Not for Resale

3.3.4 Aerial Ladder. A self-supporting, turntable-mounted, power-operated ladder of two or more sections permanently attached to a self-propelled automotive fire apparatus and designed to provide a continuous egress route from an elevated position to the ground. [**1901,** 2003]

3.3.5 Aerial Ladder Sections. The structural members of the aerial ladder consisting of the base and fly sections.

3.3.6 Alignment. To adjust components to bring about optimum or desired performance.

3.3.7 Ambient Temperature. The temperature of the surrounding medium; usually used to refer to the temperature of the air in which a structure is situated or a device operates. [**414,** 2007]

3.3.8 American Society for Nondestructive Testing (ASNT). A professional organization that is devoted to promoting knowledge of nondestructive testing.

3.3.9 American Welding Society (AWS). An association that provides codes, guidelines, and standards utilized to evaluate welded structures and components in welded structures.

3.3.10 Ancillary Boom Ladder. A ladder or ladders affixed to a telescoping or articulating boom section.

3.3.11 Articulating Boom. An aerial device consisting of two or more folding boom sections whose extension and retraction modes are accomplished by adjusting the angle of the knuckle joints. [**1901,** 2003]

3.3.12 Automatic Electrical Load Management System. A device that continuously monitors the electrical system voltage and automatically sheds predetermined loads in a selected order to prevent overdischarging of the apparatus' batteries. [**1901,** 2003]

3.3.13 Auxiliary Hydraulic Power. A small gasoline engine, diesel engine, or electric motor–driven hydraulic pump used to operate an aerial device in an emergency or in lieu of the main hydraulic system. [**1901,** 2003]

3.3.14* Auxiliary Pump. A water pump mounted on the fire apparatus that is used for fire-fighting operations that is neither a fire pump, an industrial supply pump, nor a transfer pump.

3.3.15 Base Rail. The lower chord (rail) of an aerial ladder to which rungs and reinforcements are attached. [**1901,** 2003]

3.3.16 Base Section. The first or bottom section of an aerial device. [**1901,** 2003]

3.3.17 Boom. An assembled section of an aerial device. The boom construction can be of the stressed-skin box beam type, the trussed lattice type, or the open "U" truss-type design. [**1901,** 2003]

3.3.18 Boom Boost Cylinders. The hydraulic cylinders located on the upper boom of an articulating boom aerial device that help lift the upper boom from the lower boom.

3.3.19 Boom Support. A structural component that is attached to the chassis frame and that is used to support the aerial device when it is in the cradled position.

3.3.20 Bow. The distance that the end of an aerial ladder or boom deviates from a straight line extension of the base section.

3.3.21 Cable. A wire rope used to transmit forces from one component to another for the purpose of extending or retracting an aerial device.

3.3.22 Cable Separation Guide. The mechanism that aligns and separates the cable when it is wound on the drum of an aerial ladder's extension winch.

3.3.23 Calibrate. To correlate the reading of an instrument or system of measurement with a standard.

3.3.24 Chassis. The basic operating motor vehicle including the engine, frame, and other essential structural and mechanical parts, but exclusive of the body and all appurtenances for the accommodation of driver, property, passengers, appliances, or equipment related to other than control. Common usage might, but need not, include a cab (or cowl). [**1901,** 2003]

3.3.25 Collector Rings. An assembly of slip rings for transferring electrical energy from a stationary to a rotating member. [**70:**675.2]

3.3.26 Combination Vehicle. A vehicle consisting of a towing vehicle and one or more towed units.

3.3.27 Component. A constituent part of a mechanical or electrical device.

3.3.28* Compound Gauge. A gauge that indicates pressure both above and below atmospheric pressure.

3.3.29 Cylinder Links. The mechanisms that can be used in connecting an articulating boom to the end of the upper elevating cylinders or to the lower and upper booms.

3.3.30 Deficiency(ies). A discontinuity in a part or a failure to function that interferes with the service or reliability for which the part was intended.

3.3.31 Deflection. The deviation from a straight course or fixed direction.

3.3.32 Deformation. Abnormal wear, defects, cracks or fractures, warpage, and deviations from the original condition that would affect safe and correct operation.

3.3.33 Diagnostic Check. An in-depth operational analysis of a system or component to verify that it is operating correctly.

3.3.34 Discharge Pressure. The water pressure on the discharge manifold of the fire pump at the point of gauge attachment.

3.3.35 Discontinuity. A change in the normal, physical structure of a material that can affect its serviceability.

3.3.36 Diverter Valve. A valve that, when actuated, diverts hydraulic fluid from one function to another or from one hydraulic system to another; in aerial devices, it is the valve that diverts hydraulic fluid from the hydraulic system for the stabilizers to the hydraulic system for the aerial device when the aerial device is in use and from the hydraulic system for the aerial device to the hydraulic system for the stabilizers when they are being deployed or stowed.

3.3.37 Documentation. Any written or electronic data or information relative to the apparatus, including information on its operational checks, diagnostic checks, inspection, maintenance, and performance testing.

3.3.38 Drift. A time-dependent movement away from an established position.

Copyright National Fire Protection Association
Provided by IHS under license with NFPA
No reproduction or networking permitted without license from IHS
Not for Resale

3.3.39 Drivetrain. The parts of a fire apparatus that transmit power from the engine to the wheels, including the transmission, split shaft power takeoff, midship pump transmission, drive shaft(s), clutch, differential(s), and axles.

3.3.40* Electronic Battery Conductance Tester. A type of battery tester that uses proprietary electronic circuitry to determine the condition, or state of health (SOH), of a vehicle battery and does not apply a resistive load during the test.

3.3.41 Elevating Platform. A self-supporting, turntable-mounted device consisting of a personnel-carrying platform attached to the uppermost boom of a series of power-operated booms that articulate, telescope, or both and that are sometimes arranged to provide the continuous egress capabilities of an aerial ladder. [**1901,** 2003]

3.3.42 Elevation Cylinder. The hydraulic components consisting of a cylinder barrel, cylinder rod, and related hardware that are used to vary the angle of the ladder or booms.

3.3.43 Elevation Indicator. An instrument on an aerial device that shows the angle of elevation of the aerial ladder or boom.

3.3.44 Elevation Lock. A manual- or positive-locking device (i.e., holding valve) that can be actuated to maintain indefinitely a desired angle or elevation without dependence upon engine power.

3.3.45 Emergency Hand-Crank Control. An auxiliary or supplemental control with which the operator can manually operate select functions of the aerial device.

3.3.46 Extension Cylinder. The hydraulic components consisting of a cylinder barrel, cylinder rod, and related hardware that are used to vary the length of extension of a telescoping aerial device.

3.3.47 Extension Indicator. A device on an aerial ladder or extensible boom aerial device that indicates the number of feet (meters) that the device has been extended.

3.3.48 Extension Sheave. A pulley through which an extension cable operates.

3.3.49 Failure. A cessation of proper functioning or performance.

3.3.50 Fastener. A mechanical device, such as a rivet, bolt, screw, or pin, that is used to hold two or more components together securely.

3.3.51 Ferromagnetic Materials. Materials, such as iron, cobalt, and nickel, that have an abnormally high magnetic permeability.

3.3.52 Fire Apparatus. A vehicle designed to be used under emergency conditions to transport personnel and equipment, and to support the suppression of fires and mitigation of other hazardous situations. [**1901,** 2003]

3.3.53 Fire Pump. A water pump with a rated capacity of 250 gpm (1000 L/min) or greater at 150 psi (1000 kPa) net pump pressure that is mounted on a fire apparatus and used for fire fighting. [**1901,** 2003]

3.3.54 Fly Locks. See 3.3.70, Ladder Locks.

3.3.55 Fly Section. Any section of an aerial telescoping device beyond the base section. [**1901,** 2003]

3.3.56 Fracture. A type of defect found in welds that has a large length-to-width ratio and travels through or adjacent to the metal grain boundaries; usually, this type of defect is referred to as a crack.

3.3.57 Frame. The basic structural system that transfers the weight of the fire apparatus to the suspension system.

3.3.58 Gauge. A visual device that indicates a measurement.

3.3.59 Gauge Pressure. Pressure measured by an instrument where the pressure indicated is relative to atmospheric pressure.

3.3.60 Hinge Pins. Pins that are used at either the swivel or point of articulation of an aerial device.

3.3.61 Holding Valve. A valve that maintains hydraulic pressure in a hydraulic actuator (cylinder, motor, etc.) until it is activated to release.

3.3.62 In-Service Fire Apparatus. Any fire apparatus including reserve apparatus that is available for use under emergency conditions to transport personnel and equipment and to support suppression of fires and mitigation of other hazardous conditions.

3.3.63 Inspect(ion). To determine the condition or operation of a component(s) by comparing its physical, mechanical, and/or electrical characteristics with established standards, recommendations, and requirements through examination by sight, sound, or feel.

3.3.64* Instability. A condition of a mobile unit in which the sum of the moments tending to overturn the unit exceeds the sum of the moments tending to resist overturning. [**1901,** 2003]

3.3.65 Intake Pressure. The pressure on the intake passageway of the pump at the point of gauge attachment.

3.3.66 Interlock. A device or arrangement by means of which the functioning of one part is controlled by the functioning of another.

3.3.67 Ironing. Damage in the form of wear or indentations caused to the bottom of the aerial device base rail material by misalignment or malfunction of the rollers or slides.

3.3.68 Knuckle. A point of connection between upper and lower booms of an articulating device; the point at which lower and upper booms are hinged together. [**1901,** 2003]

3.3.69 Ladder Cradle. A structural component that supports an aerial ladder when it is bedded.

3.3.70 Ladder Locks. The mechanical locks or pawls that prevent movement of the sections of an aerial device when the power is shut off or in the event of loss of pressure in hydraulic circuits.

3.3.71 Leak. The escape of a gas or liquid from a hose, pipe, coupling, connection, or other confining structure at any point where the escape should not occur.

3.3.72 Leakage. The escape of a fluid from its intended containment, generally at a connection.

3.3.72.1 ***Class 1 Liquid Leakage.*** See page of liquid, as indicated by wetness or discoloration, not great enough to form drops.

3.3.72.2 ***Class 2 Liquid Leakage.*** Leakage of liquid great enough to form drops, but not enough to cause drops to fall from the item being inspected.

3.3.72.3 ***Class 3 Liquid Leakage.*** Leakage of liquid great enough to cause drops to fall from the item being inspected.

Copyright National Fire Protection Association
Provided by IHS under license with NFPA
No reproduction or networking permitted without license from IHS
Not for Resale

3.3.73 Leveling Linkages. The components and controls for achieving a level position of the platform.

3.3.74 Lift. The vertical height that water must be raised during a drafting operation, measured from the surface of a static source of water to the centerline of the pump intake.

3.3.75 Liquid Penetrant Inspection. A nondestructive inspection method used to locate and determine the severity of surface discontinuities in materials, based on the ability of a liquid to penetrate into small openings, such as cracks.

3.3.76 Load Limit Indicator. A load indicator or an instruction plate, visible at the operator's position, that shows the recommended safe load at any condition of an aerial device's elevation and extension. [**1901,** 2003]

3.3.77 Magnetic Particle Inspection. A nondestructive inspection method used to locate discontinuities in ferromagnetic materials by magnetizing the material and then applying an iron powder to mark and interpret the patterns that form.

3.3.78 Maintenance. The act of servicing a fire apparatus or a component in order to keep the vehicle and its components in proper operating condition.

3.3.79 Manufacturer's Recommendation (Specification). Any requirement or suggestion a fire apparatus builder or component producer makes in regard to care and maintenance of its product(s).

3.3.80 Modification. An alteration or adjustment to any component that is a deviation from the original specifications or design of the fire apparatus.

3.3.81 Negative Pressure. Pressure less than atmospheric. [**99,** 2005]

3.3.82* Net Pump Pressure. The sum of the discharge pressure and the suction lift converted to psi or kPa when pumping at draft, or the difference between the discharge pressure and the intake pressure when pumping from a hydrant or other source of water under positive pressure. [**1901,** 2003]

3.3.83 Neutral Position. The position of operating controls when the controls are not engaged.

3.3.84 Nondestructive Testing (NDT). One of several methods used to inspect a structural component without physically altering or damaging the materials.

3.3.85 Operational Check. To determine the operational readiness of a component on a fire apparatus by observing the actual operation of the component.

3.3.86 Operator. A person qualified to operate a fire apparatus. [**1912,** 2006]

3.3.87 Operator Alert Device. Any device, whether visual, audible, or both, installed in the driving compartment or at an operator's panel, to alert the operator to either a pending failure, an occurring failure, or a situation that requires his or her immediate attention.

3.3.88* Optical Source. Any single, independently mounted, light-emitting component in a lighting system. [**1901,** 2003]

3.3.89 Out-of-Service. The condition when an apparatus or component is not usable due to an unsafe or inoperable condition.

3.3.90 Overhaul (Rebuild). To make extensive repairs in order to restore a component to like-new condition in accordance with the original manufacturer's specifications.

3.3.91 Override. A system or device used to neutralize a given action or motion. [**1901,** 2003]

3.3.92 Performance Tests. Tests made after a fire apparatus has been put into service to determine if its performance meets predetermined specifications or standards.

3.3.93 Platform. An assembly consisting of the support structure, floor, railings, and operator's secondary controls that is attached to the tip of a boom or an aerial ladder for carrying personnel and equipment.

3.3.94 Pneumatic Lines. The lines that supply air, which is normally for a breathing air system or for pneumatic power tools, to a platform or to the tip of an aerial ladder.

3.3.95 Power Source. A device that produces line voltage electricity.

3.3.96 Powered Equipment Rack. A power-operated device that is intended to provide storage of hard suction hoses, ground ladders, or other equipment, generally in a location above apparatus compartments. [**1901,** 2003]

3.3.97 Preventive Maintenance. The act or work of keeping something in proper condition by performing necessary preventive actions in a routine manner to prevent failure or breakdown.

3.3.98 Proper(ly). In accordance with the manufacturer's specifications or as recommended by the manufacturer.

3.3.99 PTO. Power takeoff. [**1901,** 2003]

3.3.100 Qualified Person. A person who, by possession of a recognized degree, certificate, professional standing, or skill, and who, by knowledge, training, and experience, has demonstrated the ability to deal with problems relating to the subject matter, the work, or the project. [**1451,** 2007]

3.3.101 Rated Capacity (Aerial Device). The total amount of weight of all personnel and equipment that can be supported at the outermost rung of an aerial ladder or on the platform of an elevating platform with the waterway uncharged. [**1901,** 2003]

3.3.102 Rated Capacity (Water Pump). The flow rate to which the pump manufacturer certifies compliance of the pump when it is new. [**1901,** 2003]

3.3.103* Rated Vertical Height. The vertical distance measured by a plumb line from the maximum elevation of the aerial device allowed by the manufacturer to the ground.

3.3.104 Relief Valve. A device that allows the bypass of fluids to limit the pressure in a system.

3.3.105 Repair. To restore to sound condition after failure or damage.

3.3.106 Replace. To remove an unserviceable item and install a serviceable counterpart in its place.

3.3.107 Reserve Fire Apparatus. A fire apparatus retained as backup apparatus and used to replace a primary apparatus when the primary apparatus is out of service.

3.3.108 Retired Fire Apparatus. A vehicle that was previously a fire apparatus but which, due to age or condition, is no longer capable of supporting the suppression of fires, the mitigation of hazardous situations, or operations at an emergency scene.

3.3.109 Rotation Gear. The main gear of an aerial device that is used for the rotation of the turntable.

Copyright National Fire Protection Association
Provided by IHS under license with NFPA
No reproduction or networking permitted without license from IHS
Not for Resale

3.3.110 Rotation Gear Reduction Box. The mechanism of an aerial device that transfers hydraulic or electric power to the rotation gear, creating the torque necessary to rotate the turntable.

3.3.111 Rotation Lock. A strong friction or other positive-locking device (e.g., holding valve) that retains the turntable in any desired position.

3.3.112 Rung Cap Casting. A casting that can be riveted to the outside of the base rail over the ends of each rung on an aerial ladder.

3.3.113 Safety Stop Mechanism. A device that is located on the aerial device and prevents raising the elevating platform booms or sections beyond safe operating horizontal or vertical angles.

3.3.114 Service Tests. See 3.3.92, Performance Tests.

3.3.115 Severe Service. Those conditions that apply to the rigorous, harsh, and unique applications of fire apparatus, including but not limited to local operating and driving conditions, frequency of use, and manufacturer's severe service (duty) parameters.

3.3.116 Slide Blocks. Blocks made of a variety of materials (e.g., brass, nylatron) that act as spacing devices, wear strips, or wear pads.

3.3.117 Stabilizer. A device integral with or separately attached to the chassis of a fire apparatus with an aerial device that is used to increase the moments tending to resist overturning the apparatus.

3.3.118 Stabilizer Pad. A plate inserted beneath a stabilizer shoe to give greater surface bearing area. [**1901,** 2003]

3.3.119 Stabilizer Shoe. A permanently mounted shoe on a stabilizer to provide a ground surface area. [**1901,** 2003]

3.3.120 Steering Axle(s). Any axle(s) designed such that the wheels have the ability to turn the vehicle.

3.3.121 Stressed-Skin-Type Boom Section. A boom framework that is fabricated by the welding of metal into full box sections with internal torsional members.

3.3.122 Telescopic. Extended or retracted by sliding of the overlapping sections.

3.3.123 Test. To verify serviceability by measuring the mechanical, pneumatic, hydraulic, or electrical characteristics of an item and comparing those characteristics with prescribed standards.

3.3.124 Top Rail. The top chord (rail) of an aerial ladder to which reinforcements are attached. [**1901,** 2003]

3.3.125 Torque Box. A structural component placed between the turntable and the chassis or part of the chassis frame of an aerial device to absorb the stresses of operation.

3.3.126 Torque Value. A measure of tightness or the amount of stress that is put on a fastening device (i.e., bolt) to secure it properly.

3.3.127 Total Continuous Electrical Load. The total current required to operate all of the devices permanently connected to the apparatus that can be simultaneously energized excluding intermittent-type loads such as primers and booster reel rewind motors. [**1901,** 2003]

3.3.128 Transfer Pump. A water pump mounted on the apparatus that is used to transfer water to and from the fire apparatus.

3.3.129 Trussed-Lattice-Type Boom Section. An open truss boom framework with vertical and diagonal braces that are fastened to horizontal beams of the frame.

3.3.130 Twist. The degree of rotational movement from a given position.

3.3.131 Ultrasonic Inspection. A nondestructive method of inspection in which high-frequency vibrations are injected through the surface of the test material and bounced back to their source from the opposite surface; if a flaw exists, signals return in a different pattern, revealing the location and extent of the flaw.

3.3.132* Vacuum. The reduction in atmospheric pressure inside a pump or suction hose.

3.3.133 Visual Inspection. Inspection by the eye without recourse to any optical devices, except prescription eyeglasses.

3.3.134 Water Tower. An aerial device consisting of permanently mounted power-operated booms and a waterway designed to supply a large capacity mobile elevated water stream. The booms can be of articulating design or telescoping design. [**1901,** 2003]

3.3.135 Weldment. A structure that is formed by the welding together of several components.

Chapter 4 General Requirements

4.1* General. All fire apparatus that could be placed in service for emergency response shall be inspected, maintained, tested, and retired as required by this standard.

4.1.1 Chassis, Driving and Crew Compartment, and Body.

4.1.1.1 The chassis, driving and crew compartment, and body shall be inspected and maintained as required by Chapter 7.

4.1.1.2 The chassis components shall be performance tested as required by Chapter 16.

4.1.2 Electrical Systems.

4.1.2.1 The low voltage electrical systems on the fire apparatus shall be inspected and maintained as required by Chapter 8 and performance tested as required by Chapter 17.

4.1.2.2 If the apparatus is equipped with a line voltage electrical system, that system shall be inspected and maintained as required by Chapter 13 and performance tested as required by Chapter 22.

4.1.3 Water Pumping System or Water Tank.

4.1.3.1 If the fire apparatus is equipped with a water pumping system or a water tank, the water pumping system(s) or the water tank(s) shall be inspected and maintained as required by Chapter 9.

4.1.3.2 If the apparatus is equipped with a fire pump or an industrial supply pump, the fire pump system or industrial supply pump system shall be performance tested as required by Chapter 18.

4.1.4 Aerial Device. If the fire apparatus is equipped with an aerial device, the aerial device shall be inspected and maintained as required by Chapter 10 and performance tested as required by Chapter 19.

--`,,```,,,,````-`-`,,`,,`,`,,`---

Copyright National Fire Protection Association
Provided by IHS under license with NFPA
No reproduction or networking permitted without license from IHS
Not for Resale

4.1.5 Foam Proportioning System. If the fire apparatus is equipped with a foam proportioning system, the system shall be inspected and maintained as required by Chapter 11 and performance tested as required by Chapter 20.

4.1.6 Compressed Air Foam System (CAFS). If the fire apparatus is equipped with a compressed air foam system, the system shall be inspected and maintained as required by Chapter 12 and performance tested as required by Chapter 21.

4.1.7 Compressed Air Systems.

4.1.7.1 If the fire apparatus is equipped with a compressed air system, the system shall be inspected and maintained as required by Chapter 14.

4.1.7.2 If the apparatus is equipped with a breathing air system, the system shall be performance tested as required by Chapter 23.

4.1.8 Winches. If the fire apparatus is equipped with a winch, the winch shall be inspected and maintained as required by Chapter 15.

4.1.9 Other Components or Auxiliary Systems. If there are other fixed components or auxiliary systems on the fire apparatus, those components or auxiliary systems shall be inspected, maintained, and tested in accordance with the component manufacturer's recommendations and this standard to the extent that the requirements are applicable.

4.2 Taking Fire Apparatus Out of Service. It shall be the responsibility of the authority having jurisdiction (AHJ) to enforce the criteria for when the apparatus is to be taken out of service in accordance with the requirements in Chapter 6.

4.3 Qualifications of Personnel.

4.3.1 Inspections, maintenance, and testing on fire apparatus shall be performed by qualified personnel as required by 4.3.1.1 and 4.3.1.2.

4.3.1.1* Any person performing diagnostic checks, inspections, or maintenance of the fire apparatus shall meet the qualifications of NFPA 1071, *Standard for Emergency Vehicle Technician Professional Qualifications*, or the equivalent.

4.3.1.2* The AHJ shall determine who is qualified to perform the daily/weekly inspection and the operational checks of fire apparatus.

4.4 Safety.

4.4.1* Anyone performing operational checks, diagnostic checks, inspections, or maintenance on fire apparatus shall consult the appropriate operator's, service, and maintenance manuals before starting any work on the apparatus.

4.4.2 All safety warnings and recommendations shall be read and followed.

4.4.3* All federal, state, and local laws and regulations governing workplace safety shall be followed when performing maintenance on fire apparatus.

4.4.4 All federal, state, and local laws shall be followed in the use and disposal of chemicals and hazardous materials.

4.4.5 Remediation equipment and methods shall be used prior to and during preventive maintenance when dealing with possible contamination by, and exposure to, hazardous materials, medical and biological waste, and other hazards.

4.4.6 Personal protection, including eye protection, hearing protection, and suitable respirators for breathing protection, shall be used when the maintenance operations require such protection.

4.4.7 A system or method shall be utilized to remove exhaust emissions from an operating engine in a confined area.

4.4.8 Proper methods shall be utilized to lift, support, secure, and stabilize as appropriate, the fire apparatus undergoing maintenance.

4.4.9 Proper tools and equipment shall be selected for the task to be performed.

4.5 Inspections and Maintenance.

4.5.1 The fire apparatus shall meet all federal, state or provincial, and local laws for motor vehicle inspection.

4.5.2* All inspections and maintenance shall be conducted in accordance with the manufacturer's recommended procedures.

4.5.3* It shall be the responsibility of the AHJ to develop and implement a schedule for the operational checking, inspection, diagnostic checking, and maintenance of the fire apparatus and its systems and components in accordance with this document, the manufacturer's recommendations, local experience, and operating conditions.

4.5.4 An operational check and visual check of the fire apparatus shall be performed on a daily/weekly basis to ensure the operational readiness of the unit.

4.5.4.1 Defined systems of the apparatus shall be checked, including the fire pump, aerial device, warning lights, audible warning devices, cab and pump panel instrumentation, seat belts, tires, engine, transmission, drivetrain, and brake system.

4.5.4.2 An inspection form shall be utilized to record the results of the operational and visual check. *(See Annex C.)*

4.5.5* A complete inspection and diagnostic check of the fire apparatus shall be conducted at least as frequently as recommended by the apparatus manufacturer or once per year, whichever comes first.

4.5.6 Component inspections shall be performed at least as frequently as recommended by the manufacturer and when the fire apparatus or any component is suspected or reported to have defects or deficiencies.

4.5.7 All deficiencies found during an inspection shall be repaired or corrected by a qualified person.

4.6 Maintenance and Repairs.

4.6.1 Maintenance and repairs shall be made in accordance with the manufacturer's recommendations.

4.6.2 Parts or components used to maintain or repair the fire apparatus shall meet or exceed the original manufacturer's specifications.

4.7* Documentation.

4.7.1 Records shall be maintained on the results of all apparatus inspections, maintenance requests, preventive maintenance, repairs, and testing.

4.7.2 Separate files shall be established and maintained for each individual fire apparatus.

4.7.3 All records shall be kept for the life of the vehicle and delivered with the vehicle upon transfer or change of ownership.

--`,,```,,,,````-`-`,,`,,`,`,,`---

Copyright National Fire Protection Association
Provided by IHS under license with NFPA
No reproduction or networking permitted without license from IHS
Not for Resale

Chapter 5 Retirement of Fire Apparatus

5.1* General.

5.1.1 The fire department shall consider safety as the primary concern in the retirement of apparatus.

5.1.2 Retired fire apparatus shall not be used for emergency operations.

Chapter 6 Out-of-Service Criteria

6.1 General.

6.1.1 It shall be the responsibility of the AHJ to take the apparatus or the defective portion of the apparatus out of service if any of the deficiencies defined in this chapter are encountered.

6.1.2 Where a technician conducts an evaluation of the apparatus to determine if the apparatus or a component should be taken out of service, the technician shall report the findings to the AHJ in writing, with one of the following recommendations:

(1) The apparatus shall be taken out of service.
(2) The apparatus shall be retained in service with specified limitations.
(3) The apparatus shall be retained in service without limitations.

6.1.3 In addition to the defects defined in this chapter, the AHJ shall include out-of-service criteria based on state, provincial, and local regulations; specific manufacturer's recommendations; and requirements established by the fire department.

6.1.4 The apparatus shall be returned to service only after the defects and deficiencies that caused the apparatus to be taken out of service have been corrected and the defective component retested to the component manufacturer's specification and the requirements of this document.

6.1.5 The AHJ shall establish a means to immediately identify that the apparatus is out of service for any operator who might have reason to use the apparatus.

6.1.5.1 Out-of-service apparatus shall be identified by one of the following means:

(1) Sign on the outside of the driver's door near the door handle
(2) Special bag that covers the steering wheel
(3) Large sign on the driver's window
(4) Highly visible mechanism at the driver's position on the fire apparatus that all members of the fire department recognize as an out-of-service indicator

6.1.5.2 A technician working on a fire apparatus shall identify that a vehicle is out of service or that the apparatus is being serviced using one of the means specified in 6.1.5.1.

6.1.6* If a component or system on the fire apparatus is out of service, but the apparatus is still in service, a means shall be provided on the fire apparatus to immediately identify for the driver/operator which component or system is out of service.

6.1.6.1 Out-of-service components shall be identified using both of the following:

(1) Distinctive color sign located on the inside of the driver's door identifying which component is out of service
(2) Highly visible device provided at the component control(s) indicating that the device is out of service

6.1.6.2 Any out-of-service component shall be noted on the daily/weekly check sheet.

6.1.6.3 If the fire pump or the aerial device is out of service, the engagement device shall be disabled so as to prevent operation of the pump or the aerial device.

6.2 Driving and Crew Areas, Apparatus Body, and Compartmentation.

6.2.1 The following deficiencies of the driving and crew areas, the apparatus body, and the compartmentation shall cause the apparatus to be taken out of service:

(1) Cracked or broken windshield that obstructs the driver's/operator's view
(2) Missing or broken rearview mirrors that obstruct the driver's/operator's view
(3) Missing or broken windshield wipers
(4) Missing or broken door latches
(5) Missing or broken foot throttle

6.2.2 If a seat belt is torn or has melted webbing, missing or broken buckles, or loose mountings, the following shall apply:

(1) If it is at a seat other than the driver's seat, that seat shall be taken out of service.
(2) If it is at the driver's seat, the entire apparatus shall be taken out of service.

6.2.3* If there are deficiencies with the following system or components, a qualified technician shall conduct an out-of-service evaluation and make a written report, including recommendations to the AHJ:

(1) Body mounting
(2) Cab mounting
(3) Steering wheel
(4) Required cab instrumentation
(5) Defrosters

6.3 Chassis, Axles, Steering and Suspension Systems, Driveline, Wheels, and Tires.

6.3.1 The following deficiencies of the chassis, axles, steering and suspension systems, driveline, wheels, and tires shall cause the apparatus to be taken out of service:

(1) The gross axle weight rating (GAWR) shown on the vehicle weight rating label is greater than the tire manufacturer's load rating.
(2) When weighed in accordance with Section 16.2, the weight on the front axle, the weight on the rear axle, or the total gross weight of the fire apparatus exceeds the values shown on the vehicle weight rating label.
(3) Tires have cuts in the sidewall that penetrate to the cord.
(4)*Tires have a tread depth of less than 4/32 in. (3.2 mm) on any steering axle or 2/32 in. (1.6 mm) on any nonsteering axle at any two adjacent major tread grooves anywhere on the tire.
(5) Suspension components are loose, broken, or missing.
(6) Wheels or rims have the following deficiences:
    (a) Bent, broken, cracked, improperly seated, sprung, or mismatched lock or side ring(s)
    (b) Cracked, broken, or elongated bolt holes

Copyright National Fire Protection Association
Provided by IHS under license with NFPA
No reproduction or networking permitted without license from IHS
Not for Resale

(c) Loose, missing, broken, cracked, stripped, or otherwise ineffective fasteners
(d) Weld deficiencies, as follows:
i. Cracks in welds attaching disc wheel disc to rim
ii. Cracks in welds attaching tubeless demountable rim to adapter
iii. Welded repair on aluminum wheel(s) on a steering axle
iv. Welded repair, other than disc to rim attachment, on steel disc wheel(s) mounted on the steering axle

(7) Axle flanges have Class 3 leakage.
(8) An axle has Class 3 leakage.
(9) Steering components do not meet the requirements of 49 CFR Part 399.211, Appendix G, "Minimum Periodic Inspection Standards."
(10) A steering component has Class 3 leakage.
(11) Driveline components do not meet the requirements of 49 CFR 399.211, Appendix G.

6.3.2 A qualified technician shall conduct an out-of-service evaluation of the following tire deficiencies and make a written report, including recommendations to the AHJ:

(1) Punctures
(2) Cuts to the cord
(3) Bulges, other than bumps or repairs; repair bulges greater than ⅜ in. (10 mm), or bulges or knots associated with tread
(4) Sidewall separation

6.4 Engine Systems.

6.4.1* The following defects and deficiencies of the engine system shall cause the apparatus to be taken out of service:

(1) Engine that won't crank or start
(2) Engine system that has Class 3 leakage of oil
(3) Engine that is overheating
(4) Oil that contains coolant
(5) Oil that is diluted with fuel
(6) Fuel system component that has Class 2 leakage of fuel
(7) Stop-engine light that fails to turn off after engine is started

6.4.2 If there are deficiencies of the following systems or components, a qualified technician shall conduct an out-of-service evaluation and make a written report, including recommendations to the AHJ:

(1) Air filter restriction
(2) Fuel tank, mountings, or straps

6.5 Engine Cooling System.

6.5.1 The following deficiencies of the engine cooling system shall cause the apparatus to be taken out of service:

(1) Cooling system component that has Class 3 leakage
(2) Coolant that contains oil
(3) Cooling system that exceeds maximum operating temperature

6.5.2 If there are deficiencies with the following systems or components, a qualified technician shall conduct an out-of-service evaluation and make a written report, including recommendations to the AHJ:

(1) Radiator
(2) Water pump bearing
(3) Cooling fan
(4) Coolant system components

6.6 Transmission and Clutch.

6.6.1 The following defects and deficiencies of the transmission and clutch shall cause the apparatus to be taken out of service:

(1) Automatic transmission that overheats in any range
(2) Automatic transmission that has a "do not shift" light on
(3) Transmission components that have Class 3 leakage of transmission oil

6.6.2 If there are deficiencies of the following systems or components, a qualified technician shall conduct an out-of-service evaluation and make a written report, including recommendations to the AHJ:

(1) Clutch components
(2) Transmission components
(3) Shift linkages

6.7 Low Voltage and Line Voltage Electrical Systems.

6.7.1 The following defects and deficiencies of the low voltage electrical system and the line voltage electrical system shall cause the apparatus to be taken out of service:

(1) Legally required lighting (DOT lighting) or horn that is not operational
(2) Ignition system that is not operational
(3) Charging system that is not operational
(4)*Any failure of the warning light system that creates any position around the apparatus from which no warning light is visible

6.7.2 If there are deficiencies in the grounding and bonding system, a qualified technician shall conduct an out-of-service evaluation and make a written report, including recommendations to the AHJ.

6.7.3 If any of the following conditions exist, a qualified technician shall conduct an out-of-service evaluation and make a written report, including recommendations to the AHJ:

(1)*Inoperative siren
(2) Overheating of power source and systems
(3) Tripping of circuit breakers [ground fault circuit interrupter (GFCI), if applicable]
(4) Line voltage power source producing high or low voltage or frequency
(5) Damaged receptacles or observed electrical shock hazard

6.8 Braking Systems.

6.8.1 Air Brake Systems.

6.8.1.1* The following deficiencies of the air brake system shall cause the apparatus to be taken out of service:

(1) Service brakes that have an air pressure drop of more than 2 psi (13.8 kPa) in 1 minute for straight chassis or more than 3 psi (20.7 kPa) in 1 minute for combination chassis, with the engine stopped and the service brakes released
(2) Leak-down rate (time) of the applied side of the air brake that is more than 3 psi (20.7 kPa) in 1 minute for straight chassis or more than 4 psi (27.6 kPa) in 1 minute for combination chassis, with the engine stopped and the service brakes applied
(3) Brakes that are out of adjustment

Copyright National Fire Protection Association
Provided by IHS under license with NFPA
No reproduction or networking permitted without license from IHS
Not for Resale

(4) Braking system components that are not operational
(5) Service brake that does not meet test or DOT requirements
(6) Parking (spring) brake operation that does not meet parking brake tests or standards
(7) Air compressor that fails to build air pressure from 85 psi to 100 psi (586 kPa to 690 kPa) in 45 seconds, with engine at full RPM
(8) Air compressor that fails to maintain 80 psi to 90 psi (552 kPa to 621 kPa) pressure in the system, with the service brakes applied and the engine at idle, or air compressor that fails to fill the air system to the air compressor governor cutout pressure with the service and parking brakes released
(9) Friction surfaces, brake shoes, or disc brake pads that have grease or oil on them
(10) Brake linings or pads that are worn beyond the brake system manufacturer's minimum specifications
(11) Rotors and drums that are worn beyond the brake system manufacturer's minimum specifications
(12) Air gauge or audio low-air warning device that has failed

6.8.1.2 If the antilock braking system (ABS) warning indicator indicates a problem, a qualified technician shall conduct an out-of-service evaluation and make a written report, including recommendations to the AHJ.

6.8.2 Hydraulic Brake Systems.

6.8.2.1* The following deficiencies of the hydraulic brake system shall cause the apparatus to be taken out of service:

(1) Brake system components that have Class 2 leakage of brake fluid
(2) Friction surfaces, brake shoes, or disc brake pads that have grease or oil on them
(3) Braking system components that are not operational
(4) Braking operation that does not meet braking tests or standards
(5) Parking (service) brake operation that does not meet parking brake tests or standards
(6) Brake warning light that is activated or brake pedal that falls away or drifts toward the floor when brake pressure is applied
(7) Brake linings or pads that are worn beyond the brake system manufacturer's minimum specifications
(8) Rotors and drums that are worn beyond the brake system manufacturer's minimum specifications

6.8.2.2 If the ABS warning indicator indicates a problem, a qualified technician shall conduct an out-of-service evaluation and make a written report including recommendations to the AHJ.

6.8.3 Air-Over-Hydraulic Brake Systems. The requirements of 6.8.1 and 6.8.2 shall apply to the applicable portion of an air-over-hydraulic brake system.

6.8.4 Wheel Chocks. If the apparatus is not equipped with two wheel chocks, mounted in readily accessible locations, the condition shall be reported to the AHJ.

6.9 Fire Pump System.

6.9.1 The following deficiencies of the fire pump system shall cause the pumping system to be taken out of service:

(1) Pump that will not engage
(2) Pump shift indicators in cab and on operator's panel that do not function properly
(3) Pressure control system that is not operational
(4) Pump transmission components that have Class 3 leakage of fluid
(5) Pump operator's panel throttle that is not operational
(6)*Pump operator's engine speed advancement interlock that is not operational

6.9.2 If there are deficiencies of the following systems or components, a qualified technician shall conduct an out-of-service evaluation and make a written report, including recommendations to the AHJ:

(1) Pump transmission lubricant
(2) Valves
(3) Valve controls
(4) Pump piping
(5) Pressure-indicating devices
(6) Water tank
(7) Water level indicator

6.9.3 If pump shaft seals leak beyond the manufacturer's specifications, a qualified technician shall conduct an out-of-service evaluation of the problem and make a written report, including recommendations to the AHJ.

6.9.4 If the pump test indicates a deficiency, a qualified technician shall conduct an out-of-service evaluation and make a written report, including recommendations to the AHJ.

6.10 Aerial Device Systems.

6.10.1 The following deficiencies of the aerial device and its systems shall cause the aerial device to be taken out of service:

(1) Power takeoff (PTO) that will not engage
(2) Stabilizer system that is not operational
(3) Aerial device that is not operational
(4) Hydraulic system components that are not operational
(5) Cable sheaves that are not operational
(6) Cables that are frayed
(7) Base and section rails that show ironing beyond the manufacturer's recommendations
(8) Aerial device that is structurally deformed
(9) Torque box fasteners that are broken or missing
(10) Turntable fasteners that are broken or missing

6.10.2 If there are deficiencies of the following systems or components, a qualified technician shall conduct an out-of-service evaluation and make a written report, including recommendations to the AHJ:

(1) Hydraulic relief valve
(2) Hydraulic system components
(3) Emergency hydraulic system
(4) Visual and audible alarm systems
(5) Aerial lighting system
(6) Aerial intercom system
(7) Labels or warning signs
(8) Aerial water delivery system

6.10.3 A qualified technician shall conduct an out-of-service evaluation of the following problems and make a written report, including recommendations to the AHJ:

(1) Rollers and slides that are worn beyond manufacturer's recommendations
(2) Rotation bearing that has clearances beyond the manufacturer's recommendations

--`,,```,,,,````-`-`,,`,,`,`,,`---
Copyright National Fire Protection Association
Provided by IHS under license with NFPA
No reproduction or networking permitted without license from IHS
Not for Resale

Chapter 7 Inspection and Maintenance of the Chassis, Driving and Crew Compartment, and Body

7.1 General. All components and systems commonly found on or in the chassis, driving compartment, crew compartment, and body shall be inspected and maintained in accordance with the manufacturer's instructions and this chapter.

7.2 Frame and Suspension.

7.2.1 All frame rails and members shall be inspected for defects, structural integrity, corrosion, perforations, and missing or loose parts.

7.2.2 All suspension components including, but not limited to, the following shall be inspected for defects, missing or loose parts, and functional operation and shall be lubricated:

(1) Springs and spring hangers
(2) Air springs (bags), mounting brackets, and attaching hardware
(3) Equalizer beams and torque arms
(4) Shock absorbers

7.2.3 The frame and suspension shall be inspected for proper alignment.

7.3 Axles, Tires, and Wheels.

7.3.1 All axle components including, but not limited to, the following shall be inspected for security of mounting, structural integrity, deformation, abnormal wear, and leakage, shall be functionally operated, and shall be lubricated:

(1) Ball joints
(2) King pins
(3) Spindles and bushings
(4) Attaching hardware
(5) Axle beams and housings
(6) Axle shafts
(7) Axle power dividers
(8) Differentials and controls
(9) Two-speed axle shift units
(10) Upper and lower control arms

7.3.2 Wheel bearings and seals shall be cleaned, shall be inspected for deformation, wear, cracks, and leakage, and shall be lubricated.

7.3.3* Tires shall be inspected for damage and shall be inflated to the tire manufacturer's recommended pressure.

7.3.4* Tires shall be replaced at least every 7 years or more frequently when the tread wear exceeds state or federal standards as determined by measuring with a tread depth gauge. *[See 6.3.1(4).]*

7.3.5* Wheel-attaching nuts shall be torqued to the wheel manufacturer's recommendation.

7.3.6 Wheels and rims shall be inspected for cracks, deformation, structural integrity, and corrosion.

7.4 Engine.

7.4.1 The engine oil shall be inspected for contamination and maintained at the level specified by the engine manufacturer.

7.4.2 The engine shall be inspected for security of mounting and fluid leaks.

7.4.3 Engine oil and filters shall be serviced in accordance with the engine manufacturer's severe service recommendation. If no severe service recommendation exists, the shortest interval recommended by the engine manufacturer, based on time or mileage, shall be followed.

7.4.4 The diagnostic codes for electronically controlled engines shall be reviewed for types and frequency of error codes that have been logged.

7.4.5* The engine performance shall be maintained in accordance with the engine manufacturer's recommendations.

7.4.6 Engine braking systems shall be maintained in accordance with the manufacturer's recommendations.

7.5 Engine Cooling System.

7.5.1 The engine coolant shall be inspected for contamination and maintained at the level specified by the manufacturer.

7.5.2 The radiator assembly shall be inspected and cleaned of dirt, debris, and obstructions to airflow.

7.5.3 All hoses and fittings shall be inspected for condition and leakage.

7.5.4 The water pump(s) shall be inspected for condition and leakage.

7.5.5 The cooling system shall be pressure tested for leakage.

7.5.6 All belts shall be inspected for wear, deformation, and proper adjustment.

7.5.7 The chemical components of the coolant shall be tested and maintained at the proper balance.

7.5.8 Cooling system temperature indicators and gauges shall be diagnostically checked.

7.5.9 Temperature control devices including, but not limited to, the following shall be diagnostically checked:

(1) Thermostats
(2) Clutch fans
(3) Radiator shutters
(4) Electric cooling fans

7.5.10 Auxiliary heat exchangers installed in the engine cooling system shall be inspected for security of mounting, deformation, and leaks.

7.6* Engine Fuel System.

7.6.1 Fuel filters and fuel-water separators shall be maintained in accordance with the manufacturer's recommendations.

7.6.2 The fuel tank, lines, and all connections shall be inspected for security of mounting, deformation, and leakage.

7.6.3 The carburetor or the injection pump and injectors shall be maintained in accordance with the engine manufacturer's recommendations.

7.6.4 Gauges, indicators, and sending units shall be diagnostically checked.

7.6.5* All mechanical throttle linkage and stops shall be inspected for proper adjustment and diagnostically checked.

7.6.6 All electronic throttle components and throttle position sensors (TPS) shall be inspected for counts and diagnostically checked.

--`,,```,,,,````-`-`,,`,,`,`,,`---

Copyright National Fire Protection Association
Provided by IHS under license with NFPA
No reproduction or networking permitted without license from IHS
Not for Resale

7.7 Engine Air Intake System.

7.7.1 The engine air intake system shall include, but not be limited to, the following:

(1) Air cleaner element
(2) Piping
(3) Turbocharger
(4) Air after-cooler
(5) Intercooler
(6) Air-to-air cooler
(7) Blower
(8) Ember separator

7.7.2 The engine air intake system shall be maintained in accordance with the manufacturer's severe service recommendation. If no severe service recommendation exists, the shortest service interval recommended by the engine manufacturer, based on time or mileage, shall be followed.

7.7.3 Where engines are equipped with a charged air aftercooler, it shall be inspected visually for outward signs of damage or deformation.

7.7.4 All hoses, tubes, and fittings shall be inspected for deformation and leakage.

7.7.5 The airflow shall be monitored for restriction greater than that recommended by the engine manufacturer.

7.8 Engine Exhaust System.

7.8.1 The engine exhaust system shall include, but not be limited to, the following:

(1) Exhaust manifold(s)
(2) Exhaust pipes
(3) Muffler(s)
(4) Tailpipe(s)
(5) Exhaust clamps, brackets, and mounting hardware
(6) Turbocharger
(7) Catalytic converter(s)
(8) Exhaust filtration system

7.8.2 The exhaust system shall be inspected for security of mounting, deformation, and exhaust leaks and shall be maintained in accordance with the engine manufacturer's recommendations.

7.9 Transmission.

7.9.1 The transmission shall be inspected for security of mounting, structural integrity, and leakage and shall be diagnostically checked.

7.9.2 The clutch and linkage, if the fire apparatus is so equipped, shall be inspected for condition and adjustment, diagnostically checked, and maintained in accordance with the manufacturer's recommendations.

7.9.3 Transmission lubricants and filters shall be inspected for contamination, and lubricants shall be maintained at the level specified by the manufacturer.

7.9.4 The lubricant and filters shall be serviced in accordance with the transmission manufacturer's severe service recommendation. If no severe service recommendation exists, the shortest interval recommended by the transmission manufacturer, based on time or mileage, shall be followed.

7.9.5 The transmission controls and shift linkage shall be inspected for condition and maintained in accordance with the manufacturer's recommendations.

7.9.6 All transmission indicators and gauges shall be tested for proper operation and accuracy.

7.9.7 The diagnostic codes for all electronically controlled transmissions shall be reviewed for types and frequency of error codes that have been logged.

7.9.8 Power takeoffs (PTOs) shall be inspected for security of mounting and leakage and shall be diagnostically checked.

7.9.9 The lockup system for pumps and other accessories shall be inspected for leakage and shall be diagnostically checked.

7.9.10 Transmission braking systems shall be maintained in accordance with the manufacturer's recommendations.

7.9.11 Auxiliary heat exchangers installed in the transmission cooling system shall be inspected for security of mounting, deformation, and leaks.

7.10 Driveline.

7.10.1 All drive shafts, universal joints, carrier bearings, flanges, bearing cap bolts, and slip yokes shall be inspected for alignment, security of mounting, and wear and shall be lubricated.

7.10.2 Driveline retarding systems shall be cleaned, shall be inspected for security of mounting, shall be diagnostically checked, and shall be lubricated.

7.11 Steering System.

7.11.1 The steering system shall include, but not be limited to, the following components:

(1) Power steering pump, filters, and reservoir
(2) Steering valve(s), cylinders, and hydraulic components
(3) Steering gear box(es)
(4) Steering gear mounting brackets
(5) Steering arms, drag links, pitman arms, tie rods, and tie rod ends
(6) Steering column assembly and steering wheel

7.11.2 All steering system components shall be inspected for structural integrity, security of mounting, leakage, and condition, shall be diagnostically checked, and shall be lubricated.

7.11.2.1 The surrounding vehicle components shall be inspected for indications that the wheels or tires have been rubbing during steering.

7.11.2.2 Both the left and right steering axle stops shall be diagnostically checked to ensure the steering gear hydraulics relieve before contacting the steering stops

7.11.2.3 Steering Gear Mounting Bracket.

7.11.2.3.1 The steering gear mounting bracket shall be cleaned and inspected for cracks.

7.11.2.3.2 All steering gear mounting bracket fasteners shall be inspected for proper installation, grade, and torque.

7.11.2.4 The steering linkage assembly shall be inspected to ensure that the pinch bolts, cotter pins, and other retaining hardware are in place and properly secured.

7.11.2.5 The steering wheel shall be rotated to check for steering backlash.

7.11.3 The steering gear box(es) and power steering reservoir lubricant levels shall be maintained in accordance with the manufacturer's recommendations.

Copyright National Fire Protection Association
Provided by IHS under license with NFPA
No reproduction or networking permitted without license from IHS
Not for Resale

7.11.4 The steering valve(s), steering arms, drag links, pitman arms, tie rod ends, and steering column assembly shall be lubricated.

7.11.5 All steering pump belts, hoses, and lines shall be inspected for wear, adjustment, and deformation.

7.11.6 Electronic steering controls and indicators shall be maintained in accordance with the manufacturer's recommendations.

7.12 Braking System.

7.12.1* The braking system shall be inspected and maintained in accordance with the manufacturer's severe service recommendation. If no severe service recommendation exists, the shortest interval recommended by the braking system manufacturer, based on time or mileage, shall be followed.

7.12.2 The parking brake shall be inspected for structural integrity, security of mounting, missing or broken parts, and wear and shall be diagnostically checked.

7.12.3 The parking brake controls and activating mechanism shall be inspected for structural integrity, security of mounting, and missing or broken parts, shall be diagnostically checked, and shall be lubricated.

7.12.4 The brake linings shall be replaced in accordance with the brake manufacturer's severe service recommendation when they are contaminated, when the lining is worn to the minimum thickness for safe operation as defined by the brake manufacturer, or when the brake drum or rotor is replaced.

7.12.5 The drums or rotors shall be inspected during scheduled maintenance, when there is a suspected problem, or at the time of brake lining replacement, and the inspection shall consist of, but not be limited to, the following:

(1) Evidence of extensive heat or heat cracking
(2) Out of round
(3) Wear beyond manufacturer's specifications
(4) Rust
(5) Taper
(6) Rotor parallelism
(7) Metal fatigue

7.12.6 Machining of brake drums or rotors shall be done only in accordance with manufacturer's recommendations.

7.12.7 All components of the braking system shall be inspected for damage and wear when performing a brake overhaul.

7.12.8 Antilock Braking Systems.

7.12.8.1 Antilock braking systems (ABS), including the electronic control unit, cables, switches, relays, sensors, and valves, shall be inspected for any deficiencies and shall be diagnostically checked.

7.12.8.2 The ABS electronic control unit (ECU) diagnostic codes shall be reviewed for types and frequency of error codes that have been logged.

7.12.9 If the fire apparatus has a hydraulic brake system, the components to be inspected and maintained shall include, but not be limited to, the following:

(1) Pedal and linkage
(2) Brake switches
(3) Master cylinder
(4) Brake booster
(5) Hydraulic lines
(6) Valves
(7) Wheel cylinders or calipers
(8) Brake shoes or pads
(9) Brake drums or rotors
(10) Warning devices
(11) Mounting hardware
(12) Fluid level and contamination

7.12.10 If the fire apparatus has an air brake system, the components to be inspected and maintained shall include, but not be limited to, the following:

(1) Air compressor
(2) Pedal assembly
(3) All valves
(4) Hoses and lines
(5) Brake switches
(6) Brake air chambers
(7) Slack adjusters
(8) Cams and wedges
(9) Brake shoes or pads
(10) Brake drums or rotor
(11) Calipers
(12) Air dryers
(13) Drain valves
(14) Air tanks
(15) Warning devices
(16) Mounting hardware

7.12.10.1 If air accessories are connected to the chassis air brake system, the requirements of 7.12.10.1.1 and 7.12.10.1.2 shall apply.

7.12.10.1.1 The air brake system pressure protection valve(s) shall be diagnostically checked to the shutoff point.

7.12.10.1.2 The pressure protection valve shall prevent the air accessories from drawing air from the air brake system when the air pressure drops below 80 psi (552 kPa) to ensure adequate air pressure for the braking system.

7.12.10.2 Air reservoir tanks, air dryers, and drains shall be inspected for security of mounting, deformation, and leakage and shall be maintained in accordance with the manufacturer's recommendations.

7.12.10.3 All valves, lines, cylinders, and chambers shall be inspected for security of mounting, deformation, and leakage and shall be diagnostically checked.

7.12.10.4 The compressor and inlet filter system shall be inspected for security of mounting and shall be maintained in accordance with the manufacturer's recommendations.

7.12.10.5 All chassis air system belts shall be inspected for wear and deformation and shall be maintained at the manufacturer's recommended adjustment.

7.12.10.6 The cut-in and cut-out pressure settings of the air compressor governor shall be tested and maintained at the manufacturer's recommended settings.

7.12.10.7 The low-air warning systems shall be tested to ensure that activation occurs at the manufacturer's recommended setting.

7.12.10.8 Air pressure indicators shall be diagnostically checked.

Copyright National Fire Protection Association
Provided by IHS under license with NFPA
No reproduction or networking permitted without license from IHS
Not for Resale

7.12.10.9 Leak-down rate (time) of the applied side of the air brake system shall be tested with the engine stopped and the service brakes applied, and the air pressure shall not drop more than 3 psi (20.7 kPa) in 1 minute for a straight vehicle or more than 4 psi (27.6 kPa) in 1 minute for a combination vehicle.

7.12.10.10 Leak-down rate (time) of the supply-side of the chassis air system shall be tested with the engine stopped and the service brakes released, and the air pressure shall not drop more than 2 psi (13.8 kPa) in 1 minute for a straight vehicle or more than 3 psi (20.7 kPa) in 1 minute for a combination vehicle.

7.13 Chassis Air-Powered Accessories. All chassis air-powered accessories including, but not limited to, the following shall be diagnostically checked:

(1) Air horn
(2) Windshield wiper and washer
(3) Air-ride seats
(4) Air-powered steps and cab tilting systems
(5) Fire pump shift and valves

7.14 Crew and Passenger Compartments.

7.14.1 All glass, windows, and mirrors shall be inspected for condition and shall be diagnostically checked.

7.14.2 All seats shall be inspected for security of mounting and condition and shall be diagnostically checked.

7.14.3 All seat belts shall be inspected for security of mounting and condition and shall be diagnostically checked.

7.14.4 Doors, door hinges, latches, and door stops shall be inspected for security of mounting and condition, shall be diagnostically checked, and shall be lubricated.

7.14.5 All components of the cab mounting system including, but not limited to, the following shall be inspected for security of mounting and deformation:

(1) Mounting brackets
(2) Cab base structure
(3) Resilient cushions
(4) Securing fasteners

7.14.6* All equipment mounting systems including, but not limited to, mounting systems for the following shall be inspected for security of mounting and deformation and shall be maintained free of corrosion:

(1) Radios, computers, and siren controls
(2) Self-contained breathing apparatus (SCBA)
(3) Portable lights
(4) Hand tools
(5) Emergency medical service (EMS) equipment
(6) Books, street directories, and maps

7.14.7 Cab Tilting Systems. If the apparatus has a cab tilting system, it shall be inspected and maintained in accordance with 7.14.7.1 and 7.14.7.2.

7.14.7.1* All components of the cab tilting system including, but not limited to, the following shall be inspected for security of mounting and leaks and shall be diagnostically checked:

(1) Switches and remote controls
(2) Interlocks
(3) Motors and pumps
(4) Reservoirs
(5) Hoses and fittings
(6) Cylinders and lifting devices
(7) Cab support devices
(8) Split cab seals
(9) Pivot points
(10) Latches and hold-down devices

7.14.7.2 Fluids shall be inspected for contamination and maintained to the levels recommended by the manufacturer.

7.15 Body and Compartmentation.

7.15.1 All compartments and storage areas shall be inspected for structural integrity, deformation, and leaks.

7.15.1.1 Hinges, latches, and seals shall be diagnostically checked and shall be lubricated.

7.15.1.2 Doors shall be diagnostically checked for correct operation and position.

7.15.1.3 The hazard warning light and interlocks associated with, but not limited to, the following conditions shall be diagnostically checked:

(1) Open passenger or equipment compartment doors
(2) Ladder or equipment rack not in the stowed position
(3) Deployed stabilizer system
(4) Extended powered light tower

7.15.2 All steps, platforms, handrails, and access ladders shall be inspected for security of mounting, structural integrity, and deformation.

7.15.2.1 All slip-resistant surfaces shall be inspected for security of mounting and condition.

7.15.2.2 All mechanical steps shall be diagnostically checked and shall be lubricated.

7.15.3 All equipment mounting racks and brackets shall be inspected for security of mounting and deformation, shall be diagnostically checked, and shall be lubricated.

7.15.4* All finishes and reflective striping shall be inspected for defects, corrosion, and damage.

7.15.5* Where required, all signs and labels shall be inspected for their presence and any defects, corrosion, and damage.

7.16 Powered Equipment Racks. If the apparatus is equipped with powered equipment racks, the racks shall be inspected and maintained in accordance with 7.16.1 through 7.16.5.

7.16.1 All locks used to hold equipment racks in the road travel position and all interlocks to prevent operation of equipment racks when the fire apparatus is in motion shall be inspected for security of mounting and deformation.

7.16.2 Racks and interlocks shall be diagnostically checked.

7.16.3 All warning lights and visual signals for the equipment racks shall be diagnostically checked.

7.16.4 Reflective striping or reflective paint shall be inspected for defects, corrosion, and damage.

7.16.5 Equipment-holding devices shall be inspected for security of mounting and deformation, shall be diagnostically checked, and shall be lubricated.

Chapter 8 Inspection and Maintenance of Low Voltage Electrical Systems

8.1 General. Low voltage electrical systems shall be inspected and maintained in accordance with this chapter.

Copyright National Fire Protection Association
Provided by IHS under license with NFPA
No reproduction or networking permitted without license from IHS
Not for Resale

8.1.1 All electrical equipment on the apparatus shall be inspected and maintained, regardless of whether it is specified in Sections 8.2 through 8.12.

8.1.2 All components of the low voltage electrical system shall meet the following criteria:

(1) They shall be kept clean and free of accumulated dirt or corrosion.
(2) They shall be maintained in accordance with manufacturer's instructions and schedules.
(3) They shall be securely mounted.
(4) They shall be securely connected to their electrical supply and ground.

8.2 Starting System. All components of the starting system including, but not limited to, the following shall be inspected for security of mounting and deformation and shall be diagnostically checked:

(1) Batteries, cabling, and connections
(2) Cranking motor
(3) Solenoid, relays, and switches
(4) Interlock systems

8.3 Wiring. All wiring and wire looms shall be inspected for security of mounting, tight connections, proper routing, presence of grommets, condition, and cleanliness.

8.4 Batteries. The battery(ies) shall be tested for storage and performance capabilities in accordance with the manufacturer's recommendations.

8.5 Charging System.

8.5.1 All components of the charging system including, but not limited to, the following shall be inspected for security of mounting, deformation, and alignment and shall be diagnostically checked:

(1) Alternator, regulator, and associated wiring and cables
(2) Isolators
(3) Alternator drive belts
(4) Solenoids, relays, switches, and instrumentation
(5) Interlock systems

8.5.2* The alternator shall be diagnostically checked.

8.6 Ignition System. All components of the ignition system including, but not limited to, the following shall be inspected for security of mounting and deformation and shall be diagnostically checked:

(1) Associated wiring and cables
(2) Solenoid, relays, switches, instrumentation, and lighting
(3) Primary and secondary systems
(4) Glow plugs

8.7 Automatic Electrical Load Management System.

8.7.1 If so equipped, all components of the automatic electrical load management system including, but not limited to, the following shall be inspected for security of mounting and deformation:

(1) Electronic hardware
(2) Associated wiring and cables
(3) Relays, controls, and indicators
(4) Low voltage warning devices

8.7.2* The electrical load management system shall be checked for activation and operation of low voltage warning devices in accordance with the manufacturer's recommendations.

8.8 Miscellaneous Electrical Components. Miscellaneous electrical components including, but not limited to, the following shall be inspected for security of mounting and deformation and shall be diagnostically checked:

(1) Battery conditioners and chargers
(2) Shoreline receptacles
(3) Radios and intercoms
(4) Converters and inverters
(5) Fast idle system
(6) Interlock system(s)
(7) Operator alert devices
(8) Other electrical components on the apparatus not otherwise specified in Section 8.8(1) through (7)

8.9 Apparatus Lighting. All fire apparatus lighting including, but not limited to, the following shall be inspected for security of mounting and deformation and shall be diagnostically checked:

(1) Headlights
(2) Marker lights
(3) Clearance lights
(4) Turn signals and hazard lights
(5) Brake lights
(6) Backup lights
(7) Dash lights
(8) Other fire apparatus lighting equipment on the apparatus not otherwise specified in Section 8.9(1) through (7)

8.10 Work Lighting. All work lighting including, but not limited to, the following shall be inspected for security of mounting and deformation and shall be diagnostically checked:

(1) Ground lights
(2) Step lights
(3) Flood, spot, and scene lights
(4) Cab interior lights
(5) Compartment lights
(6) Other work lighting on the apparatus not otherwise specified in Section 8.10(1) through (5)

8.11 Electrical Accessories. All electrical accessories including, but not limited to, the following shall be diagnostically checked:

(1) Heater and defroster
(2) Air-conditioning system
(3) Windshield wipers and washers
(4) Instrumentation
(5) Traffic preemption
(6) Other electrical accessories on the apparatus not otherwise specified in Section 8.11(1) through (5)

8.12 Warning Devices. All warning devices including, but not limited to, the following shall be inspected for security of mounting and deformation and shall be diagnostically checked:

(1) Emergency warning lights
(2) Electric and electronic sirens
(3) Automotive traffic horn
(4) Air horns
(5) Backup alarm
(6) Other warning devices on the apparatus not otherwise specified in Section 8.12(1) through (5)

Copyright National Fire Protection Association
Provided by IHS under license with NFPA
No reproduction or networking permitted without license from IHS
Not for Resale

Chapter 9 Inspection and Maintenance of Water Pumping Systems and Water Tanks

9.1 General.

9.1.1 If the fire apparatus is equipped with a fire pump, auxiliary pump, industrial pump, or transfer pump, the pump shall be inspected and maintained in accordance with Section 9.2 and the component manufacturer's recommendations.

9.1.2 If the fire apparatus is equipped with a water tank, the tank shall be inspected and maintained in accordance with Section 9.3 and the component manufacturer's recommendations.

9.2 Fire Pump, Auxiliary Pump, Industrial Pump, and Transfer Pump.

9.2.1* General. All fire pumps, auxiliary pumps, industrial pumps, and transfer pumps shall be inspected for security of mounting, structural integrity, and leakage and shall be diagnostically checked.

9.2.2 Pump Shaft Packing or Mechanical Seals. All pump shaft packing or mechanical seals shall be inspected and maintained in accordance with the manufacturer's recommendations.

9.2.3 Renewable Anodes and Intake Strainers. Renewable anodes, intake strainers, or any other means to prevent galvanic corrosion shall be inspected for condition and replaced if necessary.

9.2.4 Pump Drive System.

9.2.4.1* The pump drive system shall be inspected for security of mounting and leakage, shall be diagnostically checked, and shall be lubricated as required by the component manufacturer.

9.2.4.2* All pump shift controls, pump shift indicators located in the driving compartment and on the operator's panel, engine speed advancement interlocks, and any other interlocks of the pump drive system shall be inspected for security of mounting and leakage, shall be diagnostically checked, and shall be lubricated as required.

9.2.4.3 All fluids in the pump drive system shall be inspected for contamination and maintained at the level and condition specified by the component manufacturer.

9.2.5 Piping and Valves. All pump piping, valves and valve controls, fire hose connections, caps, chains, and gaskets shall be inspected for security of mounting, structural integrity, proper valve operation, deformation, corrosion, and leakage and shall be lubricated as required by the component manufacturer.

9.2.6 Instrumentation and Gauges. All instrumentation, gauges, and lighting shall be inspected for security of mounting and condition and shall be diagnostically checked.

9.2.7 Pump Controls. All pump control systems including, but not limited to, the following shall be diagnostically checked:

(1) Engine speed control and interlock
(2) Pressure control devices
(3) Transfer valve
(4) Transmission lockup system

9.2.8 Pump Priming System.

9.2.8.1 The pump priming system shall be inspected for security of mounting and leakage and shall be diagnostically checked.

9.2.8.2 The priming fluid, if required, shall be inspected for contamination and proper type and shall be maintained at the level recommended by the component manufacturer.

9.2.9 Pump Drive Engine. If the pump has a separate drive engine, that engine shall be inspected and maintained in accordance with Sections 7.4 through 7.8, as applicable, and in accordance with the manufacturer's recommendations.

9.3 Water Tanks. If the apparatus is equipped with a water tank, the tank shall be inspected for security of mounting, structural integrity, deformation, and leakage and shall be maintained in accordance with 9.3.1 and 9.3.2 and the component manufacturer's recommendations.

9.3.1 The tank sumps, if equipped with a sump cleanout, shall be cleaned.

9.3.2 Where so equipped, anodes and other means to prevent galvanic corrosion shall be inspected and maintained as recommended by the manufacturer.

Chapter 10 Inspection and Maintenance of Aerial Devices

10.1 General. If the fire apparatus is equipped with an aerial ladder, elevating platform, or water tower, the aerial device and its associated systems shall be inspected and maintained in accordance with this chapter.

10.2 Inspection. The aerial device shall be inspected in accordance with Chapter 19.

10.3 Maintenance. The aerial device and its associated systems shall be maintained in accordance with the aerial device manufacturer's recommendations.

10.4 Air Storage Systems.

10.4.1 If the aerial device has an air storage system, the air storage tanks shall be inspected to verify that hydrostatic test dates are within the periods specified by the manufacturers and the applicable governmental agencies.

10.4.2 Test reports shall be reviewed to verify that the air has been tested and is in accordance with NFPA 1989, *Standard on Breathing Air Quality for Fire and Emergency Services Respiratory Protection*.

Chapter 11 Inspection and Maintenance of Foam Proportioning Systems

11.1* General. If the fire apparatus is equipped with a foam proportioning system, the system shall be inspected and maintained in accordance with this chapter.

11.2 System Components.

11.2.1 All components of the foam proportioning system shall be maintained in accordance with the recommendations of the foam system manufacturer.

11.2.2 All components of the foam proportioning system shall be inspected for security of mounting, structural integrity, and leakage and shall be diagnostically checked.

Copyright National Fire Protection Association
Provided by IHS under license with NFPA
No reproduction or networking permitted without license from IHS
Not for Resale

11.3* Cleaning. The foam proportioning system components not designed to stay in continuous contact with foam concentrate shall be thoroughly flushed after each use to ensure that all piping and components are clear of all foam concentrate.

11.4 Instrumentation and Controls. All instrumentation, gauges, and controls shall be inspected for security of mounting and condition and shall be diagnostically checked.

11.5 Strainer or Filter. Where a foam concentrate strainer(s) or filter(s) is utilized, the strainer/filter assembly shall be serviced at routine scheduled intervals.

11.6 Foam Concentrate Pump.

11.6.1 Where the foam proportioning system is equipped with a foam concentrate pump, it shall be maintained as recommended by the manufacturer.

11.6.2 The oil for the pump lubrication system shall be inspected for possible water/foam contamination and shall be maintained at the level recommended by the manufacturer.

11.7 Foam Concentrate or Foam Solution Tanks.

11.7.1 All foam concentrate or foam solution tanks shall be inspected for security of mounting, structural integrity, deformation, and leakage.

11.7.2 Foam Concentrate Inspection.

11.7.2.1 At least annually, a visual inspection shall be made of the foam concentrate(s) in the apparatus storage tank(s) for evidence of sludging or deterioration.

11.7.2.2 If evidence of sludging or deterioration is observed, the foam concentrate shall be replaced or tested to determine if it is suitable for continued use.

11.7.2.3 Foam concentrates that have exceeded the shelf life specified by the concentrate manufacturer or that the test results determine are not suitable for continued use shall be replaced.

11.8 Diagnostic Check. The foam system shall be operated to demonstrate the ability of the system to discharge foam solution or equivalent.

Chapter 12 Inspection and Maintenance of Compressed Air Foam Systems (CAFS)

12.1 General. If the fire apparatus is equipped with a compressed air foam system (CAFS), the system shall be inspected and maintained in accordance with this chapter.

12.2 System Components.

12.2.1 All components of the compressed air foam system shall be maintained in accordance with the recommendations of the manufacturer.

12.2.2 All components of the compressed air foam system shall be inspected for security of mounting, structural integrity, and leakage and shall be diagnostically checked.

12.2.3 The foam proportioning system shall be maintained, serviced, and flushed as required by Chapter 11.

12.3 Compressed Air Source.

12.3.1 General. The components of the compressed air source including, but not limited to, the following shall be inspected for security of mounting, deformation, cleanliness, and leaks and shall be diagnostically checked as recommended by the manufacturer:

(1) Filters
(2) Piping, clamps, tubing, and hose
(3) Moisture drains
(4) Air-pressure relief valves
(5) Brackets on the air intake system

12.3.2 Diagnostic Check. The air compressor shall be diagnostically checked as recommended by the manufacturer.

12.3.3 Air-Cooled Engine-Driven Air Compressor.

12.3.3.1* All components of an air-cooled engine-driven air compressor shall be inspected for security of mounting, deformation, cleanliness, and leaks.

12.3.3.2 The engine shall be inspected and maintained in accordance with the following portions of this standard:

(1) Subsections 7.4.1 through 7.4.5
(2) Sections 7.6, 7.7, and 7.8

12.3.4 Water-Cooled Engine-Driven Air Compressor.

12.3.4.1 All components of a water-cooled engine-driven air compressor shall be inspected for security of mounting, deformation, cleanliness, and leaks.

12.3.4.2 The air compressor shall be diagnostically checked as recommended by the manufacturer.

12.3.4.3 The engine shall be inspected and maintained in accordance with the following portions of this standard:

(1) Subsections 7.4.1 through 7.4.5
(2) Subsections 7.5.1 through 7.5.9
(3) Sections 7.6, 7.7, and 7.8

12.3.5 Power Takeoff (PTO)–Driven Air Compressor.

12.3.5.1 All components of a PTO–driven air compressor including, but not limited to, the following shall be inspected for security of mounting, deformation, and leaks and shall be diagnostically checked as recommended by the manufacturer:

(1) PTO
(2) Drive shafts
(3) Transfer case
(4) Gear box
(5) Air compressor

12.3.5.2 All fluids in the PTO system(s) shall be inspected for contamination and shall be maintained at the level recommended by the manufacturer.

12.3.6 Hydraulic-Driven Air Compressor.

12.3.6.1 All components of a hydraulic-driven air compressor including, but not limited to, the following shall be inspected for security of mounting, deformation, and leaks and shall be diagnostically checked as recommended by the manufacturer:

(1) Hydraulic pump
(2) Hydraulic motor
(3) Hydraulic fluid reservoir
(4) Hydraulic fluid cooler
(5) Control systems
(6) Hose, lines, and valves

12.3.6.2 All fluids in the hydraulic system(s) shall be inspected for contamination and proper type and shall be maintained at the level recommended by the manufacturer.

Copyright National Fire Protection Association
Provided by IHS under license with NFPA
No reproduction or networking permitted without license from IHS
Not for Resale

Chapter 13 Inspection and Maintenance of Line Voltage Electrical Systems

13.1 General. If the apparatus has a line voltage electrical system, it shall be inspected and maintained in accordance with this chapter.

13.2 Power Source.

13.2.1 All components of the line voltage power source shall be maintained in accordance with the recommendations of the manufacturer.

13.2.2 All power sources shall be inspected for security of mounting, condition, and fluid leakage.

13.2.3 Power sources shall be diagnostically checked.

13.2.4 Remote controls for power sources shall be inspected for condition and shall be diagnostically checked.

13.3 Wiring. All wiring and wire looms shall be inspected for security of mounting, tight connections, proper routing, presence of grommets, condition, and cleanliness.

13.4 Appliances and Controls. All line voltage appliances and controls including, but not limited to, the following appliances and controls shall be inspected for security of mounting and condition:

(1) Cord reels
(2) Extension cords
(3) Scene lights
(4) Circuit breaker boxes
(5) Switches
(6) Relays
(7) Receptacles
(8) Inlet devices
(9) Light towers
(10) Other line voltage devices not otherwise specified in 13.4(1) through (9)

13.5 Circuit Protection.

13.5.1 Circuit breakers and ground fault circuit interrupters (GFCIs) shall be inspected for condition and diagnostically checked.

13.5.2 All circuit breakers and ground fault circuit interrupters (GFCIs) shall be cycled off and on.

13.6 Instrumentation. Instrumentation, including voltmeter(s), ammeter(s), and frequency meter(s); warning and indicator lights; and associated interlock systems, shall be inspected for condition and diagnostically checked.

13.7 Engine-Driven Generators.

13.7.1 Air-Cooled Engine-Driven Line Voltage Generator.

13.7.1.1* All components of an air-cooled engine-driven line voltage generator shall be inspected for security of mounting, deformation, cleanliness, and leaks.

13.7.1.2 The engine shall be inspected and maintained in accordance with the following portions of this standard:

(1) Subsections 7.4.1 through 7.4.5
(2) Sections 7.6, 7.7, and 7.8

13.7.2 Water-Cooled Engine-Driven Line Voltage Generator.

13.7.2.1 All components of a water-cooled engine-driven line voltage generator shall be inspected for security of mounting, deformation, cleanliness, and leaks.

13.7.2.2 The engine shall be inspected and maintained in accordance with the following portions of this standard:

(1) Subsections 7.4.1 through 7.4.5
(2) Subsections 7.5.1 through 7.5.9
(3) Sections 7.6, 7.7, and 7.8

13.8 Power Takeoff (PTO)–Driven Line Voltage Generators.

13.8.1 All components of PTO–driven line voltage generators including, but not limited to, the following shall be inspected for security of mounting, deformation, and leaks:

(1) PTO
(2) Drive shafts
(3) Transfer case
(4) Gear box
(5) Generator

13.8.2 All fluids in the PTO system(s) shall be visually inspected for contamination and shall be maintained at the level recommended by the manufacturer.

13.9 Hydraulic-Driven Line Voltage Generators.

13.9.1 All components of hydraulic-driven line voltage generators including, but not limited to, the following shall be inspected for security of mounting, deformation, and leaks:

(1) Hydraulic pump and drive system
(2) Hydraulic motor and drive system
(3) Hydraulic fluid reservoir
(4) Hydraulic fluid cooler
(5) Control systems
(6) Hose, lines, and valves

13.9.2 All fluids in the hydraulic system(s) shall be visually inspected for contamination and proper type and shall be maintained at the level recommended by the manufacturer.

13.10 Belt-Driven Line Voltage Generators. All components of belt-driven line voltage generators including, but not limited to, the following shall be inspected for security of mounting and deformation:

(1) Belts
(2) Pulleys
(3) Clutch and control system
(4) Electronics
(5) Generator
(6) Mounting hardware

Chapter 14 Inspection and Maintenance of Utility Air and Breathing Air Systems

14.1 General. Any compressed air system on a fire apparatus, whether for breathing or utility air, shall be inspected and maintained in accordance with this chapter.

14.1.1 If the apparatus has a breathing air compressor system, the compressor system shall be serviced annually by a manufacturer's authorized representative.

14.1.2 If the apparatus has a breathing air compressor system, the quality of air produced by the breathing air compressor system shall be tested in accordance with NFPA 1989 following completion of the annual servicing required by 14.1.1.

Copyright National Fire Protection Association
Provided by IHS under license with NFPA
No reproduction or networking permitted without license from IHS
Not for Resale

14.2 System Components.

14.2.1 All components of the air system shall be maintained in accordance with the recommendations of the assembler or manufacturer.

14.2.2 All thermal insulating material around air system components shall be inspected for security of mounting and condition.

14.2.3 If the air system has drive belts, they shall be inspected for proper adjustment.

14.2.4 Automatic shutdown systems shall be tested in accordance with the recommendations of the assembler or manufacturer.

14.2.5 All system components shall be diagnostically checked for leaks, operation, and pressure settings.

14.3 Labels. All warning, function, and instruction labels shall be inspected for condition and legibility.

14.4 Piping, Hose, Valves, and Instrumentation.

14.4.1 All rigid piping shall be inspected for security of mounting and deformation.

14.4.2 All flexible hose shall be inspected for cuts, abrasions, or damage.

14.4.3 All valves, quick couplers, and hose reels shall be inspected for security of mounting, proper operation, and leakage.

14.4.4 All gauges, instruments, and regulators shall be inspected for security of mounting and condition.

14.5 Air Compressors.

14.5.1 Compressors and boosters shall be inspected for security of mounting and diagnostically checked.

14.5.2 Air-intake filters and screens shall be inspected for security of mounting and airflow obstruction or restriction.

14.5.3 The compressor cooling system shall be inspected for cleanliness and diagnostically checked.

14.6 Purification System.

14.6.1 The purification system shall be inspected for security of mounting and deformation, shall be tested for leakage, and shall be diagnostically checked.

14.6.2 Filter elements and purifier cartridges shall be replaced when specified by the manufacturer.

14.7 Air Storage Tanks.

14.7.1 Air storage tanks shall be inspected for security of mounting and shall be tested for leakage.

14.7.2 Air storage tanks shall be inspected to verify that hydrostatic test dates are within the periods specified by the manufacturers and the applicable governmental agencies.

14.8* Refill Stations. Fragmentation tubes, guards, or any other safety devices associated with SCBA filling stations shall be inspected for security of mounting, deformation, and condition.

14.9 Air Compressor.

14.9.1 Air-Cooled Engine-Driven Air Compressor.

14.9.1.1* All components of an air-cooled engine-driven air compressor shall be inspected for security of mounting, deformation, cleanliness, and leaks.

14.9.1.2 The air compressor shall be diagnostically checked as recommended by the manufacturer.

14.9.1.3 The engine shall be inspected and maintained in accordance with the following portions of this standard:

(1) Subsections 7.4.1 through 7.4.5
(2) Sections 7.6, 7.7, and 7.8

14.9.2 Water-Cooled Engine-Driven Air Compressor.

14.9.2.1 All components of a water-cooled engine-driven air compressor shall be inspected for security of mounting, deformation, cleanliness, and leaks.

14.9.2.2 The air compressor shall be diagnostically checked as recommended by the manufacturer.

14.9.2.3 The engine shall be inspected and maintained in accordance with the following portions of this standard:

(1) Subsections 7.4.1 through 7.4.5
(2) Subsections 7.5.1 through 7.5.9
(3) Sections 7.6, 7.7, and 7.8

14.9.3 Power Takeoff (PTO)–Driven Air Compressor.

14.9.3.1 All components of a PTO–driven air compressor including, but not limited to, the following shall be inspected for security of mounting, deformation, and leaks and shall be diagnostically checked as recommended by the manufacturer:

(1) PTO
(2) Drive shafts
(3) Transfer case
(4) Gear box
(5) Air compressor

14.9.3.2 All fluids in the PTO system(s) shall be inspected for contamination and shall be maintained at the level recommended by the manufacturer.

14.9.4 Hydraulic-Driven Air Compressor.

14.9.4.1 All components of a hydraulic-driven air compressor including, but not limited to, the following shall be inspected for security of mounting, deformation, and leaks and shall be diagnostically checked as recommended by the manufacturer:

(1) Hydraulic pump
(2) Hydraulic motor
(3) Hydraulic fluid reservoir
(4) Hydraulic fluid cooler
(5) Control systems
(6) Hose, lines, and valves

14.9.4.2 All fluids in the hydraulic system(s) shall be inspected for contamination and proper type and shall be maintained at the level recommended by the manufacturer.

14.10 Records.

14.10.1 Complete records shall be maintained of all inspections and maintenance performed on the compressed air system.

14.10.2 If the system is a breathing air compressor system, records of air quality testing, as required by NFPA 1989, shall be examined to determine that the air is being tested at the proper intervals and that no indications of deteriorating air quality exist.

Copyright National Fire Protection Association
Provided by IHS under license with NFPA
No reproduction or networking permitted without license from IHS
Not for Resale

Chapter 15 Inspection and Maintenance of Winch Systems

15.1 General. Any winch or winch attachment point on a fire apparatus shall be inspected and maintained in accordance with this chapter.

15.2 Winch Assembly. The winch assembly shall be cleaned, shall be inspected for security of mounting, shall be diagnostically checked, and shall be lubricated.

15.3 Winch Wire or Synthetic Rope.

15.3.1 The winch wire or synthetic rope shall be unwound from the winch drum and checked for security of attachment to the drum, security of attachment at the clevis and hook, kinks in the wire or rope, and frayed strands.

15.3.2 Wire rope shall be cleaned and lubricated in accordance with the manufacturer's instructions.

15.3.3 All rollers and guides shall be inspected for proper lubrication, proper operation, and any signs of wear.

15.4 Power Supply and Controls.

15.4.1 Power supply cables, remote control cables, and hydraulic hose shall be checked for wear, cracking, kinking, and abrasion.

15.4.2 The controls shall be diagnostically checked to ensure that they allow forward, reverse, neutral, and free-spooling clutch operation.

15.4.3 Hydraulic fluid and filters shall be maintained in accordance with the manufacturer's recommendations.

15.4.4 If present, the "OK to operate winch" indicator and the interlock system to prevent advancement of the engine speed shall be diagnostically checked.

15.5 Attachment Points. Attachment points for removable electric winches shall be inspected for security of mounting and damage.

Chapter 16 Road Tests and Annual Weight Verification

16.1 General. The chassis components shall be tested annually as required by this chapter.

16.2 Fire Apparatus Axle Weight Test.

16.2.1 The fully loaded fire apparatus shall be weighed following the procedure specified in 16.2.2 through 16.2.5 to ensure that the weight on the front and rear axles and the gross vehicle weight do not exceed the gross axle weight ratings (GAWRs) and the gross vehicle weight rating (GVWR) or gross combination weight rating (GCWR) as shown on the rating plate on the fire apparatus.

16.2.2 The fire apparatus shall be prepared to be weighed as follows:

(1) Load the apparatus with all items that are onboard while it is in service.
(2) Fill all fluid tanks, including the following:
  (a) Fuel tank
  (b) Foam tank(s)
  (c) Water tank
  (d) Drinking water coolers
  (e) Ice chests
  (f) Portable equipment fuel containers
(3) Remove all personnel from the driving and crew compartments.

16.2.3* The fire apparatus shall be weighed using a certified truck scale as follows:

(1) Weigh the front axle.
(2) Weigh the rear axle, whether single or tandem.
(3) Weigh the entire apparatus.

16.2.4 The apparatus weight form shown in Figure 16.2.4 shall be completed as follows to determine if the apparatus is overloaded:

(1) Record the axle weight ratings shown on the rating plate of the apparatus on line A.
(2) Record the weight data obtained when the apparatus is weighed, as required by 16.2.3, on line B.
(3)*Determine the personnel allowance by multiplying the number of riding positions in the driving and crew compartment by 200 lb (90 kg) and record that value on line C.
(4)*Determine other weight that might be added, including any items normally on the fire apparatus when it is in service but missing during the weighing, such as personal clothing, and additional equipment that might be carried during response to certain incidents, and enter those values on line D.
(5) Add lines B, C, and D for each column and record the value on line E.
(6) Subtract line E from line A and record the value on line F.

16.2.5 If all of the reserve capacity values (line F of Figure 16.2.4) are not positive, equipment on the apparatus shall be removed or redistributed as necessary and the apparatus reweighed until all reserve values are positive.

16.3 Braking System.

16.3.1 Testing of the braking system, including antilock brake systems and auxiliary brake systems, shall be conducted at least annually and whenever adjustments, repairs, or modifications have been performed on any component that can affect the proper operation of the braking system or systems.

16.3.2 All testing shall be conducted at a location and in a manner that does not violate local, state, provincial, or federal traffic laws.

16.3.3* The braking system test procedure shall be as follows:

(1) Lay out a course that is 12 ft (3.7 m) wide with a start and stop line, with the stop line showing the stopping distance for the type of vehicle. *(See Table 16.3.3.)*
(2) Approach the start line with the vehicle being tested centered in the course and traveling at a speed of 20 mph (32 km/hr).
(3) Apply the service brake firmly as the vehicle's front bumper crosses the start line.
(4) Observe whether the vehicle comes to a smooth stop within the prescribed distance without pulling to the right or left beyond limits.

16.3.4 The vehicle stopping distance shall be not greater than that given in Table 16.3.3, and the vehicle shall not pull to the left or right across the sides of the course boundaries.

16.4 Parking Brake System.

16.4.1* The parking brake system shall be tested at least annually.

Copyright National Fire Protection Association
Provided by IHS under license with NFPA
No reproduction or networking permitted without license from IHS
Not for Resale

	Front Axle	Rear Axle	Tiller Axle	Total Vehicle
A. GAWR				
B. Recorded weight				
C. Personnel allowance				
D. Other adjustments				
E. Total of rows B, C, and D				
F. Reserve capacity (row A minus row E)				

FIGURE 16.2.4 Apparatus Weight Form.

Table 16.3.3 Stopping Distances

Gross Vehicle Weight Rating	ft	m
10,000 lb (4,540 kg) or less	25	7.5
Single-unit vehicles over 10,000 lb (4,540 kg), except truck tractor	35	10.5
Combination vehicles and truck tractors over 10,000 lb (4,540 kg)	40	12.0

16.4.2* The parking brake system shall hold the fully loaded fire apparatus on a grade of 20 percent or the steepest grade in the fire department's jurisdiction if a grade of 20 percent is not available.

16.4.3 The parking brake shall be tested with the apparatus stopped while facing uphill and again while facing downhill on the same grade.

16.5 Road Test.

16.5.1 A road test of the fire apparatus shall be conducted at least annually, after each scheduled maintenance interval, and after repair, adjustment, or modification of the engine, transmission, drivetrain, suspension, brakes, or steering.

16.5.2 The test shall be conducted on dry, level, paved roads that are in good condition.

16.5.3 The engine shall not be operated in excess of the maximum governed speed.

16.5.4 The test shall consist of the following:

(1) Attaining a minimum top speed of not less than 50 mph (80 km/hr)
(2) Observing and recording the following while driving at least 1 mile at a safe speed for the conditions and making turns of 90 degrees to both the left and right:
  (a) Improper transmission shifting
  (b) Driveline and vehicle vibrations
  (c) Drifting and pulling during acceleration or braking
  (d) Abnormal noise
  (e) Resistance to steering recovery after a 90-degree turn

Chapter 17 Performance Testing of Low Voltage Electrical Systems

17.1 General. The major components of the low voltage electrical systems shall be tested as required by this chapter.

17.2* Frequency. Performance tests shall be conducted at least annually and whenever major repairs or modifications to the low voltage electrical system or any component of the system have been made.

17.3 Battery Test.

17.3.1 Inspection. Before testing, the batteries shall be carefully inspected.

17.3.1.1 The batteries shall be cleaned of any accumulated dirt or corrosion, and the connections shall be checked to ensure that they are clean and tight.

17.3.1.2 The batteries shall be inspected for cracks, swelling, deformation, or other physical defects.

17.3.1.3 Batteries that are not sealed shall be checked to verify that the cells have the proper electrolyte level, and distilled water shall be added if necessary.

17.3.1.4 Batteries that are sealed shall be inspected to verify that any electrolyte level indicator indicates sufficient electrolyte.

17.3.2 Battery Test Procedure. Each battery shall be individually tested using either the procedure specified in 17.3.2.1 or the procedure specified in 17.3.2.2.

17.3.2.1* Conductivity Testing. The following procedure shall be used to test the batteries if an electronic battery conductance tester is used:

(1) If the battery terminal voltage is below 12.4 volts for a 12-volt battery, or 6.2 volts for a 6-volt battery, fully charge the battery before proceeding.
(2) Turn off the fire apparatus and remove any charger.
(3) Disconnect all battery cables from the battery to be tested.
(4) Connect the tester to the battery to be tested, making the connection to the lead pad of the battery post or terminal and not to a battery cable.
(5) Perform the test in accordance with the instructions provided by the tester manufacturer.

Copyright National Fire Protection Association
Provided by IHS under license with NFPA
No reproduction or networking permitted without license from IHS
Not for Resale

(6) Record the cold cranking amperage (CCA) value reported in the apparatus maintenance records for trend analysis.
(7) If the measured CCA of the battery is less than 80 percent of the original CCA rating of the battery, the battery has failed.

17.3.2.2 Load Testing.

17.3.2.2.1 General. The following procedure shall be used to test the batteries if a battery load tester is used instead of an electronic battery conductance tester:

(1) If the battery terminal voltage is below 12.6 volts for a 12-volt battery or 6.3 volts for a 6-volt battery, fully charge the battery before proceeding.
(2) Turn off the fire apparatus and remove any charger.
(3) Disconnect all battery cables from the battery to be tested.
(4) Connect a load tester to the battery to be tested.
(5) Connect a digital voltmeter that has a ±0.5 percent dc voltage accuracy or better if the load tester has no dc voltage meter.
(6) Adjust the current load of the load tester to one-half the CCA rating for the battery being tested.
(7) Measure and record the temperature of the battery.
(8) Apply the load for 15 seconds.
(9) Record the battery terminal voltage at the end of 15 seconds.
(10) Discontinue the load test.
(11) If the voltage is below the value shown in Table 17.3.2.2.1, the battery has failed.

Table 17.3.2.2.1 Voltage for Battery to Pass Load Test

Battery Temperature		12-Volt Battery	6-Volt Battery
°F	°C	(V)	(V)
80	27	9.70	4.85
70	21	9.60	4.80
60	16	9.50	4.75
50	10	9.40	4.70
40	4	9.30	4.65
30	–1	9.10	4.55
20	–6	8.90	4.45
10	–12	8.70	4.35
0	–18	8.50	4.25

17.3.2.2.2 Battery Failure.

17.3.2.2.2.1 If the battery fails, the load shall be removed and the terminal voltage observed for 15 minutes.

17.3.2.2.2.2 If the voltage fails to reach 12.45 volts for a 12-volt battery or 6.23 volts for a 6-volt battery, the battery shall be fully recharged and the test repeated once.

17.3.2.2.2.3 If the voltage does reach 12.45 volts for a 12-volt battery or 6.23 volts for a 6-volt battery, the battery has failed.

17.4* Starter Wiring Test.

17.4.1 The wiring from the battery to the starter shall be inspected for corrosion, loose connections, worn insulation, or potential chafing points.

17.4.2 The maximum voltage drop between the points defined in 17.4.2.1 and 17.4.2.2 shall be measured while the engine is cranking.

17.4.2.1 The voltage drop in the positive (+) starter wiring shall be measured between the positive (+) input post on the starter (not the wire or connector) and the positive (+) battery terminal (not the wire or connector).

17.4.2.2 The voltage drop in the ground (–) starter wiring shall be measured between the case of the starter (not the engine block or frame) and the negative (–) battery terminal (not the wire or connector).

17.4.3 The voltage drop in each side of the wiring shall not exceed 0.2 volts for a 12-volt nominal system or 0.4 volt for a 24-volt nominal system.

17.5* Alternator Test.

17.5.1 One or more digital voltmeters with a ±0.5 percent or better dc voltage accuracy and an ammeter capable of measuring the full output of the alternator with a ±3 percent or better dc current accuracy shall be used for the alternator test.

17.5.2 Alternator output shall be measured between the alternator output post and the battery as specified in 17.5.2.1 and 17.5.2.2.

17.5.2.1 The alternator's positive (+) lead voltage drop shall be measured from the positive (+) output post of the alternator (not the wire or connector) to the positive (+) battery terminal (not the wire or connector).

17.5.2.2 The alternator's negative (–) lead voltage drop shall be measured from the alternator case or the negative (–) output post of the alternator (not the wire or connector) to the negative (–) battery terminal (not the wire or connector).

17.5.3 The meters shall be permitted to be connected before or after starting the engine.

17.5.4 The measurement point shall be selected such that any current to loads from the alternator, but not from the battery, are included in the measurement.

17.5.5* The alternator shall be tested as follows:

(1) Start the test with the engine temperature below 100°F (38°C).
(2) Increase the engine speed to 75 percent of maximum (governed) engine speed.
(3) Turn on enough electrical loads on the apparatus for the total draw to exceed the alternator output, adding load at the battery, if necessary.
(4) Record the maximum alternator current and the voltage drop in the positive (+) and negative (–) alternator leads.
(5) Stop the test and turn off loads.
(6) If the alternator output current does not reach at least 80 percent of its nameplate rated output current, the test has failed.
(7) *If the voltage drop exceeds 0.2 volts for a 12-volt nominal system or 0.4 volts for a 24-volt nominal system in either alternator lead, the test has failed.

17.6 Regulator Test.

17.6.1 The regulator test shall be performed with the battery fully charged.

17.6.2 The voltage shall be measured at the battery terminals.

Copyright National Fire Protection Association
Provided by IHS under license with NFPA
No reproduction or networking permitted without license from IHS
Not for Resale

17.6.3 The temperature of the regulator shall be measured and recorded.

17.6.4 The alternator output shall be measured at a point between the alternator output post and the battery, with the measurement point selected such that any current to loads from the alternator, but not from the battery, is included in the measurement.

17.6.5 The regulator shall be tested twice.

17.6.5.1 The first test shall be run with all loads that can be turned off and the engine at idle speed.

17.6.5.2 The second test shall be run with sufficient loads turned on that the alternator is producing a minimum of one-half of its rated output and the engine running at one-half of maximum (governed) speed.

17.6.6* If the voltage at the battery is not within the range listed in Table 17.6.6, the test has failed.

Table 17.6.6 Voltage Range for Battery to Pass Regulator Test

Regulator Temperature		12-Volt Nominal System (V)	24-Volt Nominal System (V)	42-Volt Nominal System (V)
°F	°C			
200	93	13.6 – 14.2	27.2 – 28.4	40.8 – 42.6
150	66	13.7 – 14.3	27.4 – 28.6	41.1 – 42.9
100	38	13.8 – 14.4	27.6 – 28.8	41.4 – 43.2
50	10	14.0 – 14.9	28.0 – 29.8	42.0 – 44.7
0	–18	14.2 – 15.5	28.4 – 31.0	42.6 – 46.5

17.7 Battery Charger/Conditioner Test.

17.7.1 If the apparatus is equipped with a battery charger or conditioner, it shall be tested as described in 17.7.2 and 17.7.3.

17.7.2 With the apparatus turned off, and electrical loads that exceed the rated output of the charger/conditioner turned on, the output of the battery charger/conditioner shall be at least 80 percent of the rated output of the battery charger/conditioner.

17.7.3 With the battery fully charged, the float voltage of the battery charger/conditioner shall not drop to less than 13.8 volts for a 12-volt nominal system, 27.6 volts for a 24-volt nominal system, or 41.4 volts for a 42-volt nominal system.

17.8* Total Continuous Electrical Load Test.

17.8.1 The total continuous electrical load test shall be permitted to be conducted simultaneously with other electrical or pumping tests.

17.8.2 The voltage measurements for this test shall be made with a voltmeter with a resolution of 0.01 volts or better.

17.8.3 The following test procedure shall be used:

(1) Advance the engine speed to at least 50 percent of the governed speed of the engine.
(2)*Turn on all loads that comprise the total continuous electrical load, except loads associated with the following:
  (a) Aerial hydraulic pump
  (b) Foam pump
  (c) Hydraulic-driven equipment
  (d) Winch
  (e) Windshield wipers
  (f) Four-way hazard flashers
  (g) Compressed air foam system (CAFS) compressor
(3) Measure the battery voltage at the battery terminals.
(4) Operate the apparatus under the conditions specified in 17.8.3(1) through (3) continuously for at least 20 minutes, with load shedding permitted by the system if the apparatus is equipped with an automatic electrical load management system.
(5) Measure the battery voltage at the battery terminals.
(6) Turn off electrical loads and reduce engine speed, unless required for other simultaneous testing.

17.8.4* If the voltage drop exceeds 0.05 volts from the beginning to the end of the test, the test shall be considered a failure.

17.9 Solenoid and Relay Test.

17.9.1 The solenoid and relay test shall be performed on all relays and solenoids that control the power to motors, or total loads of 50 amperes or more, including the following:

(1) Starter motor
(2) Primer motor
(3) Aerial emergency power source
(4) Cab tilt hydraulic pump
(5) Hydraulic or electric ladder or equipment racks
(6) Battery or master load disconnects
(7) Mechanical siren

17.9.2 The solenoid or relay shall be tested as follows:

(1) Attach a voltmeter from the input power stud to the point between the contacts and the motor or load.
(2) Activate the load.
(3) Measure the voltage across the power connections.
(4) Restore any insulation disturbed by the performance of the test.

17.9.3* If the voltage drop exceeds 0.3 volts, the test has failed.

Chapter 18 Performance Testing of Fire Pumps and Industrial Supply Pumps

18.1* General. If the fire apparatus is equipped with a fire pump or an industrial supply pump, the pump shall be inspected and tested as required by this chapter.

18.2* Frequency. Service tests shall be conducted at least annually and whenever major repairs or modifications to the pump or any component of the apparatus that is used in pump operations have been made.

18.3 Test Site.

18.3.1* Test Site from Draft. The test site shall be adjacent to a supply of clear water, with the water level such that the lift from the surface of the water to the center of the pump intake connection is not greater than the maximum lift shown in Table 18.5.1.1.1(a) and is close enough to allow the suction strainer to be submerged at least 2 ft (0.6 m) below the surface of the water.

18.3.2* Test Site from Hydrant. The site shall provide an area for stationing the apparatus, a hydrant(s) capable of flowing the rated capacity of the pump, and an adjacent area where the water can be discharged.

Copyright National Fire Protection Association
Provided by IHS under license with NFPA
No reproduction or networking permitted without license from IHS
Not for Resale

18.4* Environmental Conditions. Tests shall be performed when the environmental conditions are within the limits shown in Table 18.4.

18.5 Equipment.

18.5.1 Suction or Intake Hose.

18.5.1.1* Suction Hose and Strainer from Draft. When a pump is tested from draft at elevations up to 2000 ft (610 m), the suction hose arrangement shall be as specified in 18.5.1.1.1 or 18.5.1.1.2, as appropriate.

18.5.1.1.1 Pumps Rated in Gallons per Minute. If the pump was originally rated in gallons per minute at pressures measured in pounds per square inch, the following shall be used:

(1) Suction hose of the appropriate size for the rated capacity of the pump as shown in Table 18.5.1.1.1(a)
(2) A suction strainer and hose that will allow flow with total friction and entrance loss not greater than that specified in Table 18.5.1.1.1(b) through Table 18.5.1.1.1(e)

18.5.1.1.2 Pumps Rated in Liters per Minute. If the pump was originally rated in liters per minute at pressures measured in kilopascals (kPa) or bars, the following shall be used:

(1) Suction hose of the appropriate size for the rated capacity of the pump as shown in Table 18.5.1.1.1(a)
(2) A suction strainer and hose that will allow flow with total friction and entrance loss not greater than that specified in Table 18.5.1.1.2(a) through Table 18.5.1.1.2(d)

Table 18.4 Environmental Conditions for Testing Pumps

Condition	Limits
Air temperature	0°F – 110°F (–18°C – 43°C)
Water temperature	35°F – 90°F (2°C – 32°C)
Barometric pressure	29 in. Hg (98.2 kPa) minimum (corrected to sea level)

18.5.1.2* Intake Hose from Hydrant.

18.5.1.2.1 When testing a pump from a hydrant, the intake hose shall be of a size and length that will allow the necessary amount of water to reach the pump with a minimum intake gauge pressure of 20 psi (140 kPa) while flowing at rated capacity.

18.5.1.2.2 Only the strainer at the pump intake connection shall be required.

18.5.2 Discharge Hose.

18.5.2.1* The fire hose arrangement shall allow discharge of the rated capacity of the pump to the nozzles or other flow-measuring equipment.

18.5.2.2 To ascertain if the hose and coupling are starting to separate, the hose shall be marked immediately behind each coupling. If the hose stretches from the coupling more than ⅜ in. (10 mm), the test shall be stopped and that section of hose shall be replaced.

Table 18.5.1.1.1(a) Suction Hose Size, Number of Suction Lines, and Lift for Fire Pump

Rated Capacity		Maximum Suction Hose Size		Maximum Number of Suction Lines*	Maximum Lift	
gpm	L/min	in.	mm		ft	m
250	1,000	3	75	1	10	3
300	1,100	3	75	1	10	3
350	1,300	4	100	1	10	3
500	2,000	4	100	1	10	3
750	3,000	4½	110	1	10	3
1000	4,000	6	150	1	10	3
1250	5,000	6	150	1	10	3
1500	6,000	6	150	2	10	3
1750	7,000	6	150	2	8	2.4
2000	8,000	6	150	2	6	1.8
2000	8,000	8	200	1	6	1.8
2250	9,000	6	150	3	6	1.8
2250	9,000	8	200	1	6	1.8
2500	10,000	6	150	3	6	1.8
2500	10,000	8	200	1	6	1.8
3000	12,000	6	150	4	6	1.8
3000	12,000	8	200	2	6	1.8
3500	14,000	6	150	4	6	1.8
3500	14,000	8	200	2	6	1.8
4000	16,000	6	150	4	6	1.8
4000	16,000	8	200	2	6	1.8
4500	18,000	6	150	4	6	1.8
4500	18,000	8	200	2	6	1.8
5000	20,000	6	150	4	6	1.8
5000	20,000	8	200	2	6	1.8

*Where more than one suction line is used, all suction lines are not required to be the same hose size.

Copyright National Fire Protection Association
Provided by IHS under license with NFPA
No reproduction or networking permitted without license from IHS
Not for Resale

Table 18.5.1.1.1(b) Friction and Entrance Loss in 20 Feet of Suction Hose, Including Strainer (Inch-Pound Units)

Flow Rate (gpm)	Suction Hose Size (Inside Diameter)							
	One 3 in.		One 3½ in.		One 4 in.		One 4½ in.	
	ft Water	in. Hg	ft Water	in. Hg	ft Water	in. Hg	ft Water	in. Hg
250	5.2(1.2)	4.6						
175	2.6(0.6)	2.3						
125	1.4(0.3)	1.2						
300	7.5(1.7)	6.6	3.5(0.8)	3.1				
210	3.8(0.8)	3.4	1.8(0.4)	1.6				
150	1.9(0.4)	1.7	0.9(0.2)	0.8				
350			4.8(1.1)	4.2	2.5(0.7)	2.1		
245			2.4(0.5)	2.1	1.2(0.3)	1.1		
175			1.2(0.3)	1.1	0.7(0.1)	0.6		
500					5.0(1.3)	4.4	3.6(0.8)	3.2
350					2.5(0.7)	2.1	1.8(0.4)	1.6
250					1.3(0.4)	1.1	0.9(0.3)	0.8
750					11.4(2.9)	9.8	8.0(1.6)	7.1
525					5.5(1.5)	4.9	3.9(0.8)	3.4
375					2.8(0.7)	2.5	2.0(0.4)	1.8

Note: Values in parentheses indicate increment to be added or subtracted for each 10 ft of hose greater than or less than 20 ft.

Table 18.5.1.1.1(c) Friction and Entrance Loss in 20 Feet of Suction Hose, Including Strainer (Inch-Pound Units)

Flow Rate (gpm)	Suction Hose Size (Inside Diameter)							
	One 4½ in.		One 5 in.		One 6 in.		Two 4½ in.	
	ft Water	in. Hg	ft Water	in. Hg	ft Water	in. Hg	ft Water	in. Hg
750	8.0(1.6)	7.1	4.7(0.9)	4.2	1.9(0.4)	1.7		
525	3.9(0.8)	3.4	2.3(0.5)	2.0	0.9(0.2)	0.8		
375	2.0(0.4)	1.8	1.2(0.2)	1.1	0.5(0.1)	0.5		
1000	14.5(2.8)	12.5	8.4(1.6)	7.4	3.4(0.6)	3.0		
700	7.0(1.4)	6.2	4.1(0.8)	3.7	1.7(0.3)	1.5		
500	3.6(0.8)	3.2	2.1(0.4)	1.9	0.9(0.2)	0.8		
1250			13.0(2.4)	11.5	5.2(0.9)	4.7	5.5(1.2)	4.9
875			6.5(1.2)	5.7	2.6(0.5)	2.3	2.8(0.7)	2.5
625			3.3(0.7)	2.9	1.3(0.3)	1.1	1.4(0.3)	1.2
1500					7.6(1.4)	6.7	8.0(1.6)	7.1
1050					3.7(0.7)	3.3	3.9(0.8)	3.4
750					1.9(0.4)	1.7	2.0(0.4)	1.8
1750					10.4(1.8)	9.3	11.0(2.2)	9.7
1225					5.0(0.9)	4.6	5.3(1.1)	4.7
875					2.6(0.5)	2.3	2.8(0.6)	2.5
2000							14.5(2.8)	12.5
1400							7.0(1.4)	6.2
1000							3.6(0.8)	3.2

Note: Values in parentheses indicate increment to be added or subtracted for each 10 ft of hose greater than or less than 20 ft.

Copyright National Fire Protection Association
Provided by IHS under license with NFPA
No reproduction or networking permitted without license from IHS
Not for Resale

Table 18.5.1.1.1(d) Friction and Entrance Loss in 20 Feet of Suction Hose, Including Strainer (Inch-Pound Units)

Flow Rate (gpm)	Suction Hose Size (Inside Diameter)									
	Two 5 in.		Two 6 in.		Three 6 in.		One 8 in.		Two 8 in.	
	ft Water	in. Hg	ft Water	in. Hg	ft Water	in. Hg	ft Water	in. Hg	ft Water	in. Hg
1500	4.7(0.9)	4.2	1.9(0.4)	1.7						
1050	2.3(0.5)	2.0	0.9(0.3)	0.8						
750	1.2(0.2)	1.1	0.5(0.1)	0.5						
1750	6.5(1.2)	5.7	2.6(0.5)	2.3						
1225	3.1(0.7)	2.7	1.2(0.3)	1.1						
875	1.6(0.3)	1.4	0.7(0.2)	0.6						
2000	8.4(1.6)	7.4	3.4(0.6)	3.0			4.3(1.1)	3.8		
1400	4.1(0.8)	3.7	1.7(0.3)	1.5			2.0(0.6)	1.8		
1000	2.1(0.4)	1.9	0.9(0.2)	0.8			1.0(0.3)	0.9		
2250	10.8(2.2)	9.5	4.3(0.8)	3.8	2.0(0.5)	1.8	5.6(1.4)	5.0	1.2(0.4)	1.1
1575	5.3(1.1)	4.7	2.2(0.4)	1.9	1.0(0.2)	0.9	2.5(0.9)	2.2	0.6(0.2)	0.5
1125	2.8(0.5)	2.5	1.1(0.2)	1.0	0.5(0.1)	0.5	1.2(0.4)	1.1	0.3(0.1)	0.3
2500	13.0(2.4)	11.5	5.2(0.9)	4.7	2.3(0.6)	2.0	7.0(1.7)	6.2	1.5(0.4)	1.3
1750	6.5(1.2)	5.7	2.6(0.5)	2.3	1.2(0.2)	1.1	3.2(1.0)	2.8	0.8(0.2)	0.7
1250	3.3(0.7)	2.9	1.3(0.3)	1.1	0.6(0.1)	0.5	1.5(0.4)	1.3	0.4(0.1)	0.4
3000			7.6(1.4)	6.9	3.4(0.6)	3.0	10.1(3.0)	9.0	2.3(0.6)	2.1
2100			3.7(0.7)	3.4	1.7(0.3)	1.5	4.7(1.3)	4.2	1.0(0.3)	0.9
1500			1.9(0.4)	1.7	0.9(0.2)	0.8	2.3(0.7)	2.1	0.6(0.2)	0.5

Note: Values in parentheses indicate increment to be added or subtracted for each 10 ft of hose greater than or less than 20 ft.

Table 18.5.1.1.1(e) Friction and Entrance Loss in 20 Feet of Suction Hose, Including Strainer (Inch-Pound Units)

Flow Rate (gpm)	Suction Hose Size (Inside Diameter)					
	Three 6 in.		Four 6 in.		Two 8 in.	
	ft Water	in. Hg	ft Water	in. Hg	ft Water	in. Hg
3500			2.6(0.5)	2.3	3.2(0.8)	2.8
2450			1.2(0.3)	1.1	1.5(0.4)	1.3
1750			0.7(0.2)	0.6	0.7(0.2)	0.7
4000	4.8(0.9)	4.3	3.4(0.6)	3.0	4.3(1.1)	3.8
2800	2.8(0.5)	2.5	1.7(0.3)	1.5	2.0(0.6)	1.8
2000	1.4(0.3)	1.2	0.9(0.2)	0.8	1.0(0.3)	0.9
4500	7.6(1.4)	6.7	4.3(0.8)	3.8	5.6(1.4)	5.0
3150	3.7(0.7)	3.3	2.2(0.4)	1.9	2.5(0.9)	2.2
2250	1.9(0.4)	1.7	1.1(0.2)	1.0	1.2(0.4)	1.1
5000	7.6(1.4)	6.7	4.5(0.9)	4.0	7.0(1.7)	6.2
3500	3.8(0.7)	3.4	2.6(0.5)	2.3	3.2(1.0)	2.8
2500	2.3(0.6)	2.0	1.3(0.3)	1.2	1.5(0.4)	1.3

Note: Values in parentheses indicate increment to be added or subtracted for each 10 ft of hose greater than or less than 20 ft.

Copyright National Fire Protection Association
Provided by IHS under license with NFPA
No reproduction or networking permitted without license from IHS
Not for Resale

Table 18.5.1.1.2(a) Friction and Entrance Loss in 6 Meters of Suction Hose, Including Strainer (Metric Units)

Flow Rate (L/min)	Suction Hose Size (Inside Diameter)							
	One 75 mm		One 90 mm		One 100 mm		One 110 mm	
	m water	kPa	m Water	kPa	m Water	kPa	m Water	kPa
1000	1.6(0.04)	16						
700	0.8(0.02)	8						
500	0.4(0.01)	4						
1100	2.2(0.05)	22	1.1(0.02)	10				
770	1.1(0.02)	12	0.6(0.01)	5				
550	0.6(0.01)	6	0.3(0.01)	3				
1300			1.5(0.03)	14	0.7(0.02)	7		
910			0.7(0.01)	7	0.4(0.01)	4		
650			0.4(0.01)	4	0.2(0.01)	2		
2000					1.5(0.04)	15	1.1(0.02)	11
1400					0.7(0.02)	7	0.5(0.01)	5
1000					0.4(0.01)	4	0.3(0.01)	3
3000					3.5(0.09)	33	2.4(0.05)	24
2100					1.7(0.05)	17	1.2(0.02)	11
1500					0.9(0.02)	8	0.6(0.01)	6

Note: Values in parentheses indicate increment to be added or subtracted for each 3 m of hose greater than or less than 6 m.

Table 18.5.1.1.2(b) Friction and Entrance Loss in 6 Meters of Suction Hose, Including Strainer (Metric Units)

Flow Rate (L/min)	Suction Hose Size (Inside Diameter)							
	One 110 mm		One 125 mm		One 150 mm		Two 110 mm	
	m Water	kPa	m Water	kPa	m Water	kPa	m Water	kPa
3000	2.4(0.05)	24	1.4(0.03)	14	0.6(0.01)	6		
2100	1.2(0.02)	11	0.7(0.01)	7	0.3(0.01)	3		
1500	0.6(0.01)	6	0.4(0.01)	4	0.2(0.01)	2		
4000	4.4(0.08)	42	2.6(0.05)	25	1.0(0.02)	10		
2800	2.1(0.04)	21	1.2(0.02)	13	0.5(0.01)	5		
2000	1.1(0.02)	11	0.6(0.01)	6	0.3(0.01)	3		
5000			4.0(0.07)	39	1.6(0.03)	16	1.7(0.04)	17
3500			2.0(0.04)	19	0.8(0.02)	8	0.9(0.02)	8
2500			1.0(0.02)	10	0.4(0.01)	4	0.4(0.01)	4
6000					2.3(0.04)	23	2.4(0.05)	24
4200					1.1(0.02)	11	1.2(0.02)	12
3000					0.6(0.01)	6	0.6(0.01)	6
7000					3.2(0.05)	31	3.6(0.07)	33
4900					1.5(0.03)	16	1.6(0.03)	16
3500					0.8(0.02)	8	0.9(0.02)	8
8000							4.4(0.08)	42
5600							2.1(0.04)	21
4000							1.1(0.02)	11

Note: Values in parentheses indicate increment to be added or subtracted for each 3 m of hose greater than or less than 6 m.

Copyright National Fire Protection Association
Provided by IHS under license with NFPA
No reproduction or networking permitted without license from IHS
Not for Resale

Table 18.5.1.1.2(c) Friction and Entrance Loss in 6 Meters of Suction Hose, Including Strainer (Metric Units)

Flow Rate (L/min)	Suction Hose Size (Inside Diameter)									
	Two 125 mm		Two 150 mm		Three 150 mm		One 200 mm		Two 200 mm	
	m Water	kPa	m Water	kPa	m Water	kPa	m Water	kPa	m Water	kPa
6,000	1.4(0.03)	14	0.6(0.01)	6						
4,200	0.7(0.02)	7	0.3(0.01)	3						
3,000	0.4(0.01)	4	0.2(0.01)	2						
7,000	2.0(0.04)	19	0.8(0.02)	8						
4,900	0.9(0.02)	9	0.4(0.01)	4						
3,500	0.5(0.01)	5	0.2(0.01)	2						
8,000	2.6(0.05)	25	1.0(0.02)	10			1.3(0.03)	13		
5,600	1.2(0.02)	13	0.5(0.01)	5			0.6(0.02)	6		
4,000	0.6(0.01)	6	0.3(0.01)	3			0.3(0.01)	3		
9,000	3.3(0.07)	32	1.3(0.02)	13	0.6(0.01)	6	1.7(0.05)	17	0.4(0.01)	4
6,300	1.6(0.03)	16	0.7(0.01)	6	0.3(0.01)	3	0.7(0.03)	7	0.2(0.01)	2
4,500	0.9(0.02)	8	0.3(0.01)	3	0.2(0.01)	2	0.4(0.01)	4	0.1(0.01)	1
10,000	4.0(0.07)	39	1.6(0.03)	16	0.7(0.02)	7	2.1(0.05)	21	0.5(0.01)	4
7,000	2.0(0.04)	19	0.8(0.02)	8	0.4(0.01)	4	1.0(0.03)	9	0.2(0.01)	2
5,000	1.0(0.02)	10	0.4(0.01)	4	0.2(0.01)	2	0.5(0.01)	4	0.1(0.01)	1
12,000			2.3(0.04)	23	1.0(0.02)	10	3.0(0.09)	30	0.7(0.02)	7
8,400			1.1(0.02)	12	0.5(0.01)	5	1.4(0.04)	14	0.3(0.01)	3
6,000			0.6(0.01)	6	0.3(0.01)	3	0.7(0.02)	7	0.2(0.01)	2

Note: Values in parentheses indicate increment to be added or subtracted for each 3 m of hose greater than or less than 6 m.

Table 18.5.1.1.2(d) Friction and Entrance Loss in 6 Meters of Suction Hose, Including Strainer (Metric Units)

Flow Rate (L/min)	Suction Hose Size (Inside Diameter)					
	Three 150 mm		Four 150 mm		Two 200 mm	
	m Water	kPa	m Water	kPa	m Water	kPa
14,000			0.8 (0.2)	8	1.0 (0.2)	9
9,800			0.4 (0.1)	4	0.5 (0.1)	4
7,000			0.2 (0.1)	2	0.2 (0.1)	2
16,000	1.5 (0.3)	15	1.0 (0.2)	10	1.3 (0.3)	13
11,200	0.9 (0.2)	8	0.5 (0.1)	5	0.6 (0.2)	6
8,000	0.4 (0.1)	4	0.3 (0.1)	3	0.3 (0.1)	3
18,000	2.3 (0.4)	23	1.3 (0.2)	13	1.7 (0.4)	17
12,600	1.1 (0.2)	11	0.7 (0.1)	6	0.8 (0.3)	7
9,000	0.6 (0.1)	6	0.3 (0.1)	3	0.4 (0.1)	4
20,000	2.3 (0.4)	23	1.4 (0.3)	14	2.1 (0.5)	21
14,000	1.2 (0.2)	12	0.8 (0.2)	8	1.0 (0.3)	9
10,000	0.7 (0.2)	7	0.4 (0.1)	4	0.5 (0.1)	4

Note: Values in parentheses indicate increment to be added or subtracted for each 3 m of hose greater than or less than 6 m.

Copyright National Fire Protection Association
Provided by IHS under license with NFPA
No reproduction or networking permitted without license from IHS
Not for Resale

18.5.3 Flow-Measuring Equipment.

18.5.3.1 Any flow-measuring equipment that is used shall be capable of measuring the flow rate to within ±5 percent accuracy.

18.5.3.2* Where nozzles are used for flow measurements, they shall be used in accordance with 18.5.3.2.1 through 18.5.3.2.3.

18.5.3.2.1 The nozzle(s) shall be smoothbore.

18.5.3.2.2* Pitot tubes shall be used to measure the flow.

18.5.3.2.3 A monitor or other device shall be used to prevent movement of the nozzle.

18.5.4 Pressure-Measuring Equipment.

18.5.4.1* All test gauges shall meet the requirements for Grade A gauges as specified in ASME B40.100, *Pressure Gauges and Gauge Attachments*.

18.5.4.2 The pump intake test gauge shall be at least size 3½ in accordance with ASME B40.100, Paragraph 3.1, and shall have a range of 30 in. Hg (100 kPa) vacuum to zero for a vacuum gauge, or 30 in. Hg (100 kPa) vacuum to 150 psi (1000 kPa) for a compound gauge.

18.5.4.3 A manometer shall be permitted to be used in lieu of a pump intake gauge, provided that the tests are being conducted from draft.

18.5.4.4 The discharge pressure test gauge shall be at least size 3½ in accordance with ASME B40.100, Paragraph 3.1, and shall have a range of 0 to 400 psi (0 to 2800 kPa).

18.5.4.5 Pitot gauges shall be at least a size 2½ per ASME B40.100, Paragraph 3.1, and shall have a range of at least 0 psi to 160 psi (0 kPa to 1100 kPa).

18.5.4.6 All test gauge connections to the pump shall include "snubbing" means, such as a needle valve, that can be used to damp out rapid gauge needle movements, unless the gauges are liquid-filled.

18.5.5 Test Gauge Calibration.

18.5.5.1 All test gauges shall have been calibrated within 60 days preceding the tests.

18.5.5.2 Calibrating equipment shall consist of a dead-weight gauge tester or a master gauge meeting the requirements for Grade 3A or Grade 4A gauges, as specified in ASME B40.100, that has been calibrated within the preceding year.

18.5.6* Engine Speed–Measuring Equipment. The engine speed–measuring equipment shall consist of a nonadjustable tachometer supplied from the engine or transmission electronics, a revolution counter on a checking shaft outlet and a stop watch, or other engine speed–measuring means that is accurate to within ±50 rpm of actual speed.

18.6* Conditions for Test.

18.6.1 General. Performance tests shall be conducted at a site meeting the conditions outlined in Section 18.3 and at a time when the environmental conditions are as specified in Section 18.4.

18.6.2 Alternative Conditions. If it is impractical to provide all the conditions specified in Sections 18.3 and 18.4, the AHJ shall be permitted to authorize tests under other conditions.

18.6.3* Engine-Driven Accessories.

18.6.3.1 Engine-driven accessories shall not be functionally disconnected or otherwise rendered inoperative during the tests.

18.6.3.2 If the chassis engine drives the pump, the total continuous electrical loads, excluding those loads associated with the equipment defined in 18.6.3.2.2, shall be applied for the entire pumping portion of the test.

18.6.3.2.1* If the fire apparatus was built to the 1996 or later editions of NFPA 1901, *Standard for Automotive Fire Apparatus*, and the apparatus is equipped with a fixed power source driven by the same engine that drives the fire pump, the power source shall be running at a minimum of 50 percent of its rated capacity throughout the pumping portion of the pump test.

18.6.3.2.2 The following devices shall be permitted to be turned off or not operating during the pump test:

(1) Aerial hydraulic pump
(2) Foam pump
(3) Hydraulic-driven equipment (other than hydraulic-driven line voltage generator)
(4) Winch
(5) Windshield wipers
(6) Four-way hazard flashers
(7) CAFS compressor

18.6.3.2.3 If any electrical loads are connected through an automatic electrical load management system, the system shall be permitted to automatically disconnect the loads during the course of the test.

18.6.4 Carbon Monoxide Monitoring.

18.6.4.1 Where tests are performed inside a structure or anywhere having limited air circulation, carbon monoxide–monitoring equipment shall be used.

18.6.4.2 Carbon monoxide–monitoring equipment shall be checked and calibrated in accordance with the manufacturer's recommendations and shall include a warning device.

18.7 Procedure. *(See Annex B.)*

18.7.1* General. The ambient air temperature, water temperature, lift, elevation of test site, and atmospheric pressure (corrected to sea level) shall be determined and recorded prior to, and immediately following, the pump test.

18.7.2 Engine Speed Check.

18.7.2.1 A check of the governed engine speed shall be made.

18.7.2.2 If the engine speed is not within ±50 rpm of the governed engine speed as recorded on the pump test plate, the reason for the discrepancy shall be determined and corrected prior to starting any testing.

18.7.3* Pump Shift Indicator. A test of the pump shift indicators shall be made to verify that the pump shift indicators in the cab and on the operator's panel indicate correct pump status when the pump is shifted.

18.7.4* Pump Engine Control Interlock. For apparatus where the chassis engine drives the pump and electric or electronic engine throttle controls are provided, a test of the interlock that controls the advancement of the engine speed at the pump operator's panel shall be made.

--`,,```,,,,````-`-`,,`,,`,`,,`---

Copyright National Fire Protection Association
Provided by IHS under license with NFPA
No reproduction or networking permitted without license from IHS
Not for Resale

18.7.4.1* If the pump is designed to be driven through a split-shaft PTO with the apparatus in a stationary position, the interlock shall be tested with the chassis transmission, parking brake, and pump shift in the driving compartment as shown for the two test configurations in Table 18.7.4.1 to verify that the engine speed control at the pump operator's panel is not capable of being advanced.

18.7.4.2* If the pump is designed to be driven through a transmission-mounted PTO, front-of-engine crankshaft PTO, or engine flywheel PTO with the apparatus in a stationary position, the interlock shall be tested with the chassis transmission, parking brake, and pump shift in the driving compartment as shown for the two test configurations in Table 18.7.4.2 to verify that the engine speed control at the pump operator's panel is not capable of being advanced.

18.7.4.3* If the pump is in a fire apparatus that has both stationary and "pump-and-roll" capability, the interlock shall be tested with the chassis transmission, parking brake, and pump shift in the driving compartment as shown for the two test configurations in Table 18.7.4.3 to verify that the engine speed control at the pump operator's panel is not capable of being advanced.

18.7.4.4 Testing shall be performed with a qualified person positioned in the driving compartment and a qualified person verifying engine speed control status at the pump operator's panel.

18.7.4.5 Shifting of the pump transmission/PTO shall be done in accordance with the manufacturer's instructions.

18.7.5 Priming System Tests.

18.7.5.1 If the pump is tested from draft, a priming system test shall be conducted.

18.7.5.2 The test shall be permitted to be performed in connection with priming the pump for the pumping test.

18.7.5.3 With the apparatus set up for the pumping test, the primer shall be operated in accordance with the manufacturer's instructions until the pump has been primed and is discharging water.

18.7.5.4 The interval from the time the primer is started until the time the pump is discharging water shall be noted.

18.7.5.5 The time required to prime the pump shall not exceed 30 seconds if the rated capacity is 1250 gpm (4732 L/min) or less.

18.7.5.6 The time required to prime the pump shall not exceed 45 seconds if the rated capacity is 1500 gpm (5678 L/min) or more.

18.7.5.7 An additional 15 seconds shall be permitted to prime the pump beyond the time required by 18.7.5.5 or 18.7.5.6 when the pump system includes an auxiliary 4 in. (100 mm) or larger intake pipe having a volume of 1 ft^3 (0.0283 m^3) or more.

18.7.6* Vacuum Test. The interior of the pump shall be subjected to a vacuum test as follows:

(1) All intake valves shall be open, all intakes shall be capped or plugged, and all discharge caps shall be removed.
(2) The primer shall be operated in accordance with the manufacturer's instructions.
(3) The maximum vacuum attained shall be at least 22 in. Hg (75 kPa), unless the altitude is above 2000 ft (610 m), in which case the vacuum attained shall be permitted to be less than 22 in. Hg (75 kPa) by 1 in. Hg (3.4 kPa) for each 1000 ft (305 m) of altitude above 2000 ft (610 m).
(4) The vacuum shall not drop more than 10 in. Hg (34 kPa) in 5 minutes.
(5) The primer shall not be used after the 5 minute test period has begun.
(6) The engine shall not be operated at any speed greater than the governed speed during the test.
(7)*Close all intake valves, remove the cap or plug from each valved intake, and repeat test steps 2 through 6.

18.7.7 Pumping Test for Fire Pumps.

18.7.7.1 The pump shall be subjected to a pumping test consisting of the following:

(1) At least 20 minutes of pumping at 100 percent of rated capacity at 150 psi (1000 kPa) net pump pressure
(2) At least 10 minutes of pumping 70 percent of rated capacity at 200 psi (1400 kPa) net pump pressure
(3) At least 10 minutes of pumping 50 percent of rated capacity at 250 psi (1700 kPa) net pump pressure

Table 18.7.4.1 Stationary Pump Driven Through Split-Shaft PTO

Chassis Transmission Gear Selected	Parking Brake Status	Pump Shift Status (Driving Compartment)	Engine Speed Control at Pump Operator's Panel	Test Point
N	On	Road	Yes	
N	Off	Road	No	√
N	On	"Pump engaged"	Yes	
N	Off	"Pump engaged"	No	
Pump gear*	On	"Pump engaged" "OK to pump"	Yes	
Pump gear*	Off	"Pump engaged"	No	
Pump gear*	On	Road	No	√
Pump gear*	Off	Road	No	
Any gear other than N and pump gear*	On or off	Road	No	
Any gear other than N and pump gear*	On or off	"Pump engaged"	No	

*Chassis transmission shift selector placed in position for pumping as indicated on label provided in the driving compartment.

Copyright National Fire Protection Association
Provided by IHS under license with NFPA
No reproduction or networking permitted without license from IHS
Not for Resale

Table 18.7.4.2 Stationary Pump Driven Through Transmission-Mounted PTO, Front-of-Engine Crankshaft PTO, or Engine Flywheel PTO

Chassis Transmission Gear Selected	Parking Brake Status	Pump Shift Status (Driving Compartment)	Engine Speed Control at Pump Operator's Panel	Test Point
N	On	Disengaged	Yes	
N	Off	Disengaged	No	√
N	On	"Pump engaged" "OK to pump"	Yes	
N	Off	"Pump engaged"	No	
Any gear other than N	On	"Pump engaged"	No	√
Any gear other than N	Off	"Pump engaged"	No	
Any gear other than N	On or off	Disengaged	No	

Table 18.7.4.3 Stationary and "Pump-and-Roll" Pump

Chassis Transmission Gear Selected	Parking Brake Status	Pump Shift Status (Driving Compartment)	Engine Speed Control at Pump Operator's Panel	Test Required
N	On	Disengaged	Yes	
N	Off	Disengaged	No	√
N	On	"Pump engaged" "OK to pump"	Yes	
N	Off	"Pump engaged"	No	
Any gear other than N	On	"Pump engaged" "OK to pump and roll"	No	√
Any gear other than N	Off	"Pump engaged" "OK to pump and roll"	No	
Any gear other than N	On or off	Disengaged	No	

18.7.7.2 Overload Test.

18.7.7.2.1 If the pump has a rated capacity of 750 gpm (3000 L/min) or greater, the apparatus shall be subjected to an overload test consisting of pumping rated capacity at 165 psi (1100 kPa) net pump pressure for at least 5 minutes.

18.7.7.2.2 The overload test shall be performed immediately following the test of pumping rated capacity at 150 psi (1000 kPa) net pump pressure.

18.7.7.3 The pumping test shall not be started until the pump pressure and the discharge quantity are stabilized at the current values.

18.7.7.4* If the pump is a two-stage, parallel/series-type pump, the following criteria shall apply:

(1) The test at 100 percent of capacity shall be run with the pump in parallel mode.
(2) The test at 70 percent of capacity shall be permitted to be run with the pump in either series or parallel mode.
(3) The test at 50 percent of capacity shall be run with the pump in series mode.

18.7.7.5 The engine shall not be throttled down, except when the hose, a nozzle, or the position of a transfer valve is being changed.

18.7.7.6 A complete set of readings shall be taken and recorded a minimum of five times during the 20 minute test for 100 percent rated capacity, a minimum of twice during the overload test, and a minimum of three times during each of the 10 minute tests for 70 percent capacity and 50 percent capacity.

18.7.7.7 If the fire pump flow or pressure readings vary by more than 5 percent during a particular test, the reason for the fluctuation shall be determined, the cause corrected, and the test continued or repeated.

18.7.8 Pumping Test for Industrial Supply Pumps.

18.7.8.1 The pump shall be subjected to a pumping test consisting of the following:

(1) At least 20 minutes of pumping at 100 percent of rated capacity at 100 psi (700 kPa) net pump pressure
(2) At least 10 minutes of pumping 70 percent of rated capacity at 150 psi (1000 kPa) net pump pressure
(3) At least 10 minutes of pumping 50 percent of rated capacity at 200 psi (1400 kPa) net pump pressure

18.7.8.2 The pumping tests shall not be started until the pump pressure and the discharge quantity are stabilized at the current values.

18.7.8.3* If the pump is a two-stage, parallel/series-type pump, the following criteria shall apply:

(1) The test at 100 percent of capacity shall be run with the pump in parallel mode.
(2) The test at 70 percent of capacity shall be permitted to be run with the pump in either series or parallel mode.
(3) The test at 50 percent of capacity shall be run with the pump in series mode.

18.7.8.4 The engine shall not be throttled down, except when the hose, a nozzle, or the position of a transfer valve is being changed.

Copyright National Fire Protection Association
Provided by IHS under license with NFPA
No reproduction or networking permitted without license from IHS
Not for Resale

18.7.8.5 A complete set of readings shall be taken and recorded a minimum of five times during the 20 minute test for 100 percent rated capacity and a minimum of three times during each of the 10 minute tests for 70 percent capacity and 50 percent capacity.

18.7.8.6 If the fire pump flow or pressure readings vary by more than 5 percent during a particular test, the reason for the fluctuation shall be determined, the cause corrected, and the test continued or repeated.

18.7.9* Pressure Control Test for Fire Pumps.

18.7.9.1 The pressure control device shall be tested at rated capacity at 150 psi (1000 kPa) net pump pressure as specified in 18.7.9.1.1 through 18.7.9.1.4.

18.7.9.1.1 The pump shall be delivering rated capacity at 150 psi (1000 kPa) net pump pressure.

18.7.9.1.2 The pressure control device shall be set in accordance with the manufacturer's instructions to maintain the discharge at 150 psi (1000 kPa) net pump pressure.

18.7.9.1.3* All discharge valves shall be closed no faster than in 3 seconds and no slower than in 10 seconds.

18.7.9.1.4 The rise in discharge pressure shall not exceed 30 psi (200 kPa).

18.7.9.2 The pressure control device shall be tested at 90 psi (620 kPa) net pump pressure as specified in 18.7.9.2.1 through 18.7.9.2.5.

18.7.9.2.1 The original conditions of pumping rated capacity at 150 psi (1000 kPa) net pump pressure shall be reestablished.

18.7.9.2.2 The discharge pressure shall be reduced to 90 psi (620 kPa) net pump pressure by throttling the engine fuel supply with no change to the discharge valve setting, hose, or nozzles.

18.7.9.2.3 The pressure control device shall be set in accordance with the manufacturer's instructions to maintain the discharge at 90 psi (620 kPa) net pump pressure.

18.7.9.2.4 All discharge valves shall be closed no faster than in 3 seconds and no slower than in 10 seconds.

18.7.9.2.5 The rise in discharge pressure shall not exceed 30 psi (200 kPa).

18.7.9.3 The pressure control device shall be tested at 50 percent of rated capacity at 250 psi (1700 kPa) net pump pressure as specified in 18.7.9.3.1 through 18.7.9.3.4.

18.7.9.3.1 The pump shall be delivering 50 percent of rated capacity at 250 psi (1700 kPa) net pump pressure.

18.7.9.3.2 The pressure control device shall be set in accordance with the manufacturer's instructions to maintain the discharge at 250 psi (1700 kPa) net pump pressure.

18.7.9.3.3 All discharge valves shall be closed no faster than in 3 seconds and no slower than in 10 seconds.

18.7.9.3.4 The rise in discharge pressure shall not exceed 30 psi (200 kPa).

18.7.10* Pressure Control Test for Industrial Supply Pumps.

18.7.10.1 The pressure control device shall be tested at rated pump capacity at 100 psi (700 kPa) net pump pressure as follows:

(1) The pump shall be delivering rated capacity at 100 psi (700 kPa) net pump pressure.
(2) The pressure control device shall be set in accordance with the manufacturer's instructions to maintain the discharge at 100 psi (700 kPa) net pump pressure.
(3)*All discharge valves shall be closed no more rapidly than in 3 seconds and no more slowly than in 10 seconds.
(4) The rise in discharge pressure shall not exceed 30 psi (200 kPa).

18.7.10.2 The pressure control device shall be tested at 90 psi (620 kPa) net pump pressure as follows:

(1) The original conditions of pumping rated capacity at 100 psi (700 kPa) net pump pressure shall be reestablished.
(2) The discharge pressure shall be reduced to 90 psi (620 kPa) net pump pressure by throttling the engine fuel supply with no change to the discharge valve setting, hose, or nozzles.
(3) The pressure control device shall be set in accordance with the manufacturer's instructions to maintain the discharge at 90 psi (620 kPa) net pump pressure.
(4) All discharge valves shall be closed no more rapidly than in 3 seconds and no more slowly than in 10 seconds.
(5) The rise in discharge pressure shall not exceed 30 psi (200 kPa).

18.7.10.3 The pressure control device shall be tested at 50 percent of rated pump capacity at 200 psi (1400 kPa) net pump pressure as follows:

(1) The pump shall be delivering 50 percent of rated capacity at 200 psi (1400 kPa) net pump pressure.
(2) The pressure control device shall be set in accordance with the manufacturer's instructions to maintain the discharge at 200 psi (1400 kPa) net pump pressure.
(3) All discharge valves shall be closed no more rapidly than in 3 seconds and no more slowly than in 10 seconds.
(4) The rise in discharge pressure shall not exceed 30 psi (200 kPa).

18.7.11* Intake Relief Valve System Test. If the apparatus is equipped with an intake relief valve system or a combination intake/discharge system, a test to ensure the system is operating in accordance with the manufacturer's specifications shall be conducted.

18.7.12 Gauge Test.

18.7.12.1* Each water pressure gauge shall be checked for accuracy at a minimum of three points, including 150 psi (1000 kPa), 200 psi (1400 kPa), and 250 psi (1700 kPa).

18.7.12.2 Any gauge that is off by more than 10 psi (70 kPa) shall be recalibrated, repaired, or replaced.

18.7.13 Flowmeter Test.

18.7.13.1* Each flowmeter shall be checked for accuracy at the test flows shown in Table 18.7.13.1.

18.7.13.2 Any flowmeter that is off by more than 10 percent shall be recalibrated, repaired, or replaced.

18.7.14 Tank-to-Pump Flow Rate. If the apparatus is equipped with a water tank, the tank-to-pump flow rate also shall be checked using the following procedure:

(1) The water tank shall be filled until it overflows.
(2) All intakes to the pump shall be closed.
(3) The tank fill line and bypass cooling line shall be closed.

Copyright National Fire Protection Association
Provided by IHS under license with NFPA
No reproduction or networking permitted without license from IHS
Not for Resale

Table 18.7.13.1 Flow-Measuring Points for Flowmeters

Pipe Size		Test Flow	
in.	mm	gpm	L/min
1½	38	128	454
2	51	180	682
2½	63	300	1135
3	75	700	2650
4	100	1000	3785

(4) Hose lines and nozzles for discharging water at the anticipated flow rate shall be connected to one or more of the discharge outlets.
(5) The tank to the pump valve(s) and the discharge valves leading to the hose lines and nozzles shall be fully opened.
(6) The engine throttle shall be adjusted until the maximum consistent pressure reading on the discharge pressure gauge is obtained.
(7) The discharge valve(s) shall be closed and the water tank refilled, with the bypass line permitted to be opened temporarily if needed to keep the water temperature in the pump within acceptable limits.
(8) The discharge valves shall be reopened fully and a pitot reading or other flow measurement shall be taken while the water is being discharged, with the engine throttle adjusted to maintain the discharge pressure noted in 18.7.14(6), if necessary.
(9)*The flow rate shall be recorded and compared with the rate designated by the manufacturer when the apparatus was new or with the rate established in previous testing.

18.8* Test Results.

18.8.1* The pumping system (that is, engine, pump, transmission) shall not overheat, lose power, or exhibit other defects during the entire test.

18.8.2 The flow rate, discharge pressure, intake pressure, and engine speed recorded for each test shall be the average of the readings taken during that test.

18.8.3* The results of all tests of the pump system shall be recorded, and the results shall be compared with the results of previous tests.

18.8.4 Indications of decreasing pump or component performance shall be reported to the AHJ.

18.8.5 Data that are submitted at the time of the delivery test and all results of service tests shall be maintained in a permanent file and compared year to year to identify changing conditions that could indicate developing problems with the engine or pump.

18.8.6* If the AHJ wishes to rerate the pump, the pump shall be tested to the complete pumping test as specified in NFPA 1901, including having the test witnessed and certified by an accredited third-party testing organization.

Chapter 19 Performance Testing of Aerial Devices

19.1 General. If the fire apparatus is equipped with an aerial device, the aerial device shall be inspected and tested as required by this chapter.

19.1.1 All inspections and tests specified in this standard, except those specifically designated as nondestructive tests (NDT), shall be conducted at the following times:

(1) At least annually
(2) After major repairs or overhaul
(3) Following the use of the aerial device when the aerial device could have been subjected to unusual operating conditions of stress or load
(4) When there is reason to believe that usage has exceeded the manufacturer's recommended aerial device operating procedures

19.1.2* The inspections and tests specified in this chapter as NDT shall be conducted as follows:

(1) At least every 5 years
(2) Whenever visual inspection or load testing indicates a potential structural or safety problem
(3) When there is a desire to further confirm continued operational safety

19.1.3 If the aerial device is involved in a situation that produces any structural damage, or if the inspections and tests that are required in this standard reveal any problems that affect the structural integrity of the aerial device, the aerial device shall be placed out of service.

19.1.3.1* The aerial device shall be repaired to an acceptance level in accordance with the manufacturer's standard.

19.1.3.2 If the manufacturer is no longer in business and therefore cannot be consulted with regard to repair of the aerial device, the repairs shall be performed by a repair facility that is acceptable to the AHJ.

19.1.3.3 The aerial device shall be tested to the full operational load and NDT of this standard before it is placed back in service.

19.1.4* The inspections and tests specified herein shall be the minimum service test requirements for all aerial devices.

19.1.4.1 Since each manufacturer's unit will be somewhat different, specific attention shall be given to the manufacturer's instructions concerning periodic maintenance and inspection checks.

19.1.4.2 The testing personnel shall have written documentation identifying the aerial device manufacturer's operating procedures, component performance specifications, and tolerances.

19.1.5* Only qualified persons, acceptable to the AHJ, shall be permitted to operate the apparatus during testing procedures.

19.2 Inspection Personnel.

19.2.1 The inspections and tests outlined in this standard shall be performed by qualified persons, a third-party testing company, or the manufacturer, as determined acceptable by the AHJ.

19.2.2 The person actually performing the nondestructive test work shall be certified as at least a Level II NDT technician in the test method used, as specified in ASNT CP-189, *Standard for Qualification and Certification of Nondestructive Testing Personnel.*

19.2.3 Trainees and personnel certified to Level I NDT in the test method used shall be permitted to conduct the nondestructive tests so long as they work under the direct and immediate supervision of either a Level II or an ASNT Level III NDT technician holding current certification in the same test method.

Copyright National Fire Protection Association
Provided by IHS under license with NFPA
No reproduction or networking permitted without license from IHS
Not for Resale

19.3 Third-Party Test Companies. If a third-party test company is employed to perform NDT, that company shall meet the requirements of ISO/IEC 17020, *General criteria for the operation of various types of bodies performing inspection.*

19.4 Visual Inspection. A visual inspection shall be performed in accordance with the requirements of Sections 19.8, 19.9, or 19.10, depending on the aerial device.

19.4.1 The visual inspection shall be conducted prior to any operational or load testing and shall be carried out in a systematic sequence.

19.4.2 The visual inspection shall be to detect any visible defects, damage, or improperly secured parts.

19.5 Weld Inspection.

19.5.1 When the inspections required by 19.1.1 are performed, all accessible structural welds shall be visually inspected for fractures.

19.5.2 When the NDT required by 19.1.2 is performed, all accessible structural welds shall be inspected by technicians who meet the criteria of Section 19.2 for the test methods used.

19.5.3 Welds on Steel.

19.5.3.1 All accessible structural welds on steel shall be inspected in accordance with the applicable provisions of AWS D1.1, *Structural Welding Code — Steel.*

19.5.3.2 All structural welds shall comply with weld quality as specified in the visual inspection acceptance criteria of AWS D1.1.

19.5.4 Welds on Aluminum.

19.5.4.1 All accessible structural welds on aluminum shall be inspected in accordance with the applicable provisions of AWS D1.2, *Structural Welding Code — Aluminum.*

19.5.4.2 All structural welds shall comply with weld quality as specified in the visual inspection acceptance criteria of AWS D1.2.

19.5.5 The application of a particular NDT weld inspection technique shall be as recommended by AWS B1.10, *Guide for the Nondestructive Examination of Welds.*

19.6 Bolt and Pin Inspection. Bolts and pins that are subjected to ultrasonic testing shall contain no ultrasonic cathode ray tube (CRT) indications that can be interpreted as cracks or elongated material.

19.7 Nondestructive Testing Procedures.

19.7.1 All test procedures shall be consistent with ASTM E 1316, *Standard Terminology for Nondestructive Testing.*

19.7.2 All ultrasonic inspections shall be conducted in accordance with the following standards:

(1) ASTM E 114, *Standard Practice for Ultrasonic Pulse-Echo Straight-Beam Examination by the Contact Method*
(2) ASTM E 797, *Standard Practice for Measuring Thickness by Manual Ultrasonic Pulse-Echo Contact Method*

19.7.3 All magnetic particle inspections shall be conducted in accordance with ASTM E 709, *Standard Guide for Magnetic Particle Examination.*

19.7.4 All liquid penetrant inspections shall be conducted in accordance with the following standards:

(1) ASTM E 165, *Standard Test Method for Liquid Penetrant Examination*
(2) ASTM E 1220, *Standard Test Method for Visible Penetrant Examination Using the Solvent-Removable Process*
(3) ASTM E 1418, *Standard Test Method for Visible Penetrant Examination Using the Water-Washable Process*

19.7.5 All hardness readings shall be conducted in accordance with the following standards:

(1) ASTM B 647, *Standard Test Method for Indentation Hardness of Aluminum Alloys by Means of a Webster Hardness Gage*
(2) ASTM B 648, *Standard Test Method for Indentation Hardness of Aluminum Alloys by Means of a Barcol Impressor*
(3) ASTM E 6, *Standard Terminology Relating to Methods of Mechanical Testing*
(4) ASTM E 10, *Standard Test Method for Brinell Hardness of Metallic Materials*
(5) ASTM E 18, *Standard Test Methods for Rockwell Hardness and Rockwell Superficial Hardness of Metallic Materials*
(6) ASTM E 92, *Standard Test Method for Vickers Hardness of Metallic Materials*

19.7.6 All acoustic emission inspections shall be conducted in accordance with the following standards:

(1) ASTM E 569, *Standard Practice for Acoustic Emission Monitoring of Structures During Controlled Stimulation*
(2) ASTM E 650, *Standard Guide for Mounting Piezoelectric Acoustic Emission Sensors*

19.7.7 All eddy current inspections shall be conducted in accordance with ASTM E 1004, *Standard Practice for Determining Electrical Conductivity Using the Electromagnetic (Eddy-Current) Method.*

19.8 Inspecting and Testing Aerial Ladders.

19.8.1 General.

19.8.1.1 The tests specified in Section 19.8 shall apply only to metal aerial ladders.

19.8.1.2 In addition to the manufacturer's recommendations for annual inspections and tests, the inspections and tests detailed in 19.8.2 through 19.8.11 shall be performed.

19.8.1.3 An inspection procedure preceded by a plus sign (+) indicates that an appropriate NDT shall be conducted as required by 19.1.2.

19.8.2 Service Records. The aerial ladder's service records shall be checked for any reports that indicate defective conditions.

19.8.3 Hydraulic Components. Hydraulic components shall show no signs of hydraulic fluid leakage.

19.8.3.1 A component shall be considered leaking if hydraulic fluid (oil) droplets are forming on the component.

19.8.3.2 A film of hydraulic fluid on the component shall not be considered severe enough to categorize the component as leaking.

19.8.4 Turntable, Torque Box, Suspension, and Tractor-Drawn Components Inspection and Test. The turntable, torque box, suspension components, and tractor-drawn components, where applicable, shall be inspected on all aerial ladders in accordance with 19.8.4.1 through 19.8.4.29.

19.8.4.1 Rotation-Bearing Mounting Bolts. The rotation-bearing mounting bolts shall be inspected as follows:

Copyright National Fire Protection Association
Provided by IHS under license with NFPA
No reproduction or networking permitted without license from IHS
Not for Resale

(1) Inspect all accessible bolts for proper grade and installation as specified by the apparatus manufacturer.
(2) Using a properly calibrated torque wrench, verify that the bolt torque on all accessible bolts meets the apparatus manufacturer's specifications.
(3) (+) Inspect all accessible bolts for internal flaws.

19.8.4.2 Torque Box Mounting to Frame.

19.8.4.2.1 If the torque box is bolted to the frame, the torque box mounting to the frame shall be inspected as follows:

(1) Inspect all accessible bolts for proper grade and installation as specified by the apparatus manufacturer.
(2) Using a properly calibrated torque wrench, verify that the torque on all accessible bolts meets the apparatus manufacturer's specifications.
(3) (+) Inspect all bolts for internal flaws.

19.8.4.2.2 If the torque box is welded to the frame, the torque box mounting to the frame shall be inspected as follows:

(1) Visually inspect all accessible attaching welds for fractures.
(2) (+) Inspect all accessible attaching welds.

19.8.4.3 Tractor-Drawn Components Mounting to Frame.

19.8.4.3.1 If tractor-drawn components are bolted to the frame, the mounting of the tractor-drawn components to the frame shall be inspected as follows:

(1) Inspect all accessible bolts for proper grade and installation as specified by the apparatus manufacturer.
(2) Using a properly calibrated torque wrench, verify that the torque on all accessible bolts meets the apparatus manufacturer's specifications.
(3) (+) Inspect all bolts for internal flaws.

19.8.4.3.2 If tractor-drawn components are welded to the frame, the mounting of the tractor-drawn components to the frame shall be inspected as follows:

(1) Visually inspect all accessible attaching welds for fractures.
(2) (+) Inspect all accessible attaching welds.

19.8.4.4 Suspension System.

19.8.4.4.1 If the suspension system components are bolted to the frame, the mounting of the suspension system components to the frame shall be inspected as follows:

(1) Inspect all accessible bolts for proper grade and installation as specified by the apparatus manufacturer.
(2) Using a properly calibrated torque wrench, verify that the torque on all accessible bolts meets the apparatus manufacturer's specifications.
(3) (+) Inspect all bolts for internal flaws.

19.8.4.4.2 If the suspension system components are welded to the frame, the mounting of the suspension system components to the frame shall be inspected as follows:

(1) Visually inspect all accessible attaching welds for fractures.
(2) (+) Inspect all accessible attaching welds.

19.8.4.5 Rotation Gear and Bearing. The rotation gear and bearing shall be inspected as follows:

(1) Inspect the rotation gear for missing or damaged teeth, pinion-to-gear alignment, proper lubrication, and backlash.
(2) Inspect the bearing clearance.

19.8.4.6 Rotation Gear Reduction Box Mounting.

19.8.4.6.1 If the rotation gear reduction box is bolted to the turntable, the rotation gear reduction box mounting shall be inspected as follows:

(1) Inspect all bolts for proper grade and installation as specified by the apparatus manufacturer.
(2) Using a calibrated torque wrench, verify that the torque on all bolts meets the apparatus manufacturer's specifications.
(3) (+) Inspect all bolts for internal flaws.

19.8.4.6.2 If the rotation gear reduction box is welded to the turntable, the rotation gear reduction box mounting shall be inspected as follows:

(1) Visually inspect all of the accessible weldments for defects and all of the welds for fractures.
(2) (+) Inspect all reduction box attaching welds.

19.8.4.7 Structural Components. The structural components shall be inspected as follows:

(1) Visually inspect all of the accessible structural weldments for defects and all of the welds for fractures.
(2) (+) Inspect all accessible structural component welds.

19.8.4.8 Rotation Hydraulic Swivel. The rotation hydraulic swivel shall be inspected for external hydraulic fluid leakage and the security of the swivel attachment to the structure.

19.8.4.9 Hydraulic Lines and Hose. All hydraulic lines and hose shall be inspected for kinks, cuts and abrasions, and hydraulic fluid leakage at connectors and fittings.

19.8.4.10 Elevation, Extension, and Rotation Lock(s). The elevation, extension, and rotation lock(s) shall be inspected as follows:

(1) Inspect the manual valve on the elevation, extension, and rotation lock(s) for external hydraulic fluid leakage.
(2) Verify by visual inspection that the manual elevation lock operates properly by engaging the lock and then attempting to raise and lower the ladder while the main hydraulic system is operating.
(3) Verify by visual inspection that the manual extension lock operates properly by engaging the lock and then attempting to extend or retract the ladder while the main hydraulic system is operating.
(4) Verify by visual inspection that the manual rotation lock operates properly by engaging the lock and attempting to rotate the turntable clockwise and counterclockwise while the main hydraulic system is operating.
(5) If provided, verify that the rotation interlock system operates properly.
(6) If provided, verify that the system provided to avoid collisions between the aerial device and the apparatus cab/body operates properly.

19.8.4.11 Power Takeoff (PTO). The power takeoff (PTO) shall be inspected as follows:

(1) Inspect the PTO for external hydraulic fluid leakage.
(2) Verify that the PTO engages and disengages properly.

19.8.4.12 Hydraulic Pump. The hydraulic pump shall be inspected for external hydraulic fluid leakage.

Copyright National Fire Protection Association
Provided by IHS under license with NFPA
No reproduction or networking permitted without license from IHS
Not for Resale

19.8.4.13 Collector Rings. The collector rings shall be inspected as follows:

(1) If the collector rings are accessible, inspect them for foreign material buildup.
(2) If the collector ring terminals are accessible, inspect them for damage.
(3) Conduct tests to ensure the proper operation of the collector rings by rotating the aerial device while electric-powered devices are in operation.
(4) If applicable, check for indications of moisture in the electrical chamber by visually inspecting the desiccant moisture indicators.

19.8.4.14 Elevation Cylinder Anchor Ears and Plates.

19.8.4.14.1 The elevation cylinder anchor ears and plates shall be inspected as follows:

(1) Visually inspect the elevation cylinder anchor ears and plates for defects and the attaching welds for fractures.
(2) (+) Inspect the elevation cylinder anchor ears and plate-attaching welds.

19.8.4.14.2 If the elevation cylinder anchor is bolted, it shall be further inspected as follows:

(1) Inspect all accessible bolts for proper grade and installation as specified by the apparatus manufacturer.
(2) Using a properly calibrated torque wrench, verify that the bolt torque on all accessible bolts meets the manufacturer's specification.
(3) (+) Inspect all accessible bolts for internal flaws.

19.8.4.15 Elevation Cylinder Pins. The elevation cylinder pins shall be inspected as follows:

(1) Inspect the cylinder pins for proper installation, alignment, lubrication, operation, and retention.
(2) (+) Inspect cylinder pins for internal flaws.

19.8.4.16 Elevation Cylinders.

19.8.4.16.1 The elevation cylinders shall be inspected as follows:

(1) Inspect the cylinder rods for pitting, scoring, and other defects.
(2) Inspect the cylinder rod-to-barrel seal and the end gland seal for external hydraulic fluid leakage that exceeds the manufacturer's specifications.

19.8.4.16.2* The elevation cylinders shall be subjected to a drift test as follows:

(1) With the hydraulic fluid at ambient temperature, place the aerial device at 60 degrees elevation at full extension.
(2) Mark the cylinder position.
(3) Close the manually operated locking valves, and allow the device to stand for 1 hour with the engine off.
(4) Measure the drift and verify that the results do not exceed the manufacturer's specifications for allowable cylinder drift.

19.8.4.17 Holding Valves on Elevation Cylinders. The holding valves on the elevation cylinders shall be inspected for external hydraulic fluid leakage.

19.8.4.18 Operating Controls. The operating controls shall be inspected as follows:

(1) Inspect the operating controls to ensure control handles are not damaged or missing, functions are identified, operating instructions and warnings are posted, and no hydraulic fluid leakage has occurred.
(2) Verify that the controls operate smoothly, return to neutral position when released, and do not bind during operation.
(3) If interlocks have been provided or are required to prevent unintentional operation of the aerial device, verify that the interlocks or locking devices are operating properly.

19.8.4.19 Load Limit Indicators. The load limit indicators shall be inspected for proper operation and legibility.

19.8.4.20 Emergency Hand-Crank Controls. The emergency hand-crank controls shall be inspected for proper operation.

19.8.4.21 Auxiliary Hydraulic Power. The auxiliary hydraulic power shall be inspected for proper operation.

19.8.4.22 Turntable Alignment Indicator. When the aerial device is stowed in the cradle, the presence and accuracy of the turntable alignment indicator shall be verified.

19.8.4.23 Throttle Control.

19.8.4.23.1 The throttle control shall be inspected for proper operation.

19.8.4.23.2 The operating speed of the engine shall be measured using a tachometer or a revolution counter and shall be checked against the manufacturer's specifications.

19.8.4.24 Communication System. The communication system shall be inspected for proper installation and operation.

19.8.4.25 Relief Hydraulic Pressure. The main hydraulic pump relief pressure and compensator pressure shall be tested to determine that they do not exceed the manufacturer's specifications.

19.8.4.26 Unit Main Frame. The unit main frame shall be inspected as follows:

(1) Visually inspect the main frame for any cracks, bends, dents, twists, or other weldment defects.
(2) Visually inspect any welds for fractures.
(3) (+) Inspect all main frame welds.

19.8.4.27 Transmission/Aerial Device Interlocks. If interlocks have been provided that prevent operation of the aerial device until both the parking brakes have been set and the transmission has been positioned properly, the interlocks shall be inspected to verify they are operating properly.

19.8.4.28 Engine Speed Interlocks. If interlocks have been provided that allow operation of the engine speed control only after both the parking brakes have been set and the transmission has been positioned properly, the interlocks shall be inspected to verify they are operating properly.

19.8.4.29 Breathing Air Systems. If a breathing air system is provided, the system shall be inspected as follows:

(1) Verify that the breathing air system — including the integrity of the air cylinder mounting, the regulator, and the air lines from the air cylinder(s) to the top of the aerial device — is properly installed.
(2) Verify that all the component parts of the system are present and in serviceable condition.
(3) Visually inspect the air cylinder mounting brackets for defects and the welds for fractures.

Copyright National Fire Protection Association
Provided by IHS under license with NFPA
No reproduction or networking permitted without license from IHS
Not for Resale

(4) (+) Inspect all welds on air cylinder mounting brackets.
(5) Check that the air pressure regulator is set at the apparatus manufacturer's recommended pressure.

19.8.5 Stabilizer Inspection and Test. The stabilizer components, where applicable, shall be inspected on all aerial ladder apparatus in accordance with 19.8.5.1 through 19.8.5.16.

19.8.5.1 Stabilizer Structural Components. The stabilizer structural components shall be inspected as follows:

(1) Visually inspect all of the stabilizer components for defects and all of the welds for fractures.
(2) (+) Inspect all stabilizer structural component welds.

19.8.5.2 Stabilizer Pads. The stabilizer pads shall be inspected to verify that they are present, are of proper construction, and are in serviceable condition.

19.8.5.3 Stabilizer Mounting to Frame or Torque Box.

19.8.5.3.1 The stabilizer mounting to the frame or torque box attachment shall be visually inspected for defects such as dents and bends.

19.8.5.3.2 If the stabilizer mounting to the frame or torque box is welded, it shall be further inspected as follows:

(1) Visually inspect the stabilizer to frame or torque box mounting for weld cracks.
(2) (+) Inspect the stabilizer to frame or torque box mounting welds.

19.8.5.3.3 If the stabilizer mounting to the frame or torque box is bolted, it shall be further inspected as follows:

(1) Inspect all bolts for proper fastener grade and installation as specified by the apparatus manufacturer.
(2) Using a properly calibrated torque wrench, verify that the torque on all bolts meets the apparatus manufacturer's specifications.
(3) (+) Inspect all bolts for internal flaws.

19.8.5.4 Hydraulic Lines and Hoses in Stabilizer System. All hydraulic lines and hoses in the stabilizer system shall be inspected for kinks, cuts and abrasions, and leakage at connectors and fittings.

19.8.5.5 Stabilizer Interlock System. The stabilizer interlock system shall be inspected to verify that it is operating properly.

19.8.5.6 Stabilizer Warning Device. The stabilizer warning device shall be inspected to verify that it is operating properly.

19.8.5.7 Stabilizer Extension Cylinder Pins and Hinge Pins. The stabilizer extension cylinder pins and hinge pins shall be inspected as follows:

(1) Inspect all stabilizer cylinder pins and hinge pins for proper installation, lubrication, operation, and retention.
(2) (+) Inspect all stabilizer pins and hinge pins for internal flaws.

19.8.5.8 Stabilizer Extension Cylinders.

19.8.5.8.1 The stabilizer extension cylinders shall be inspected as follows:

(1) Inspect the stabilizer extension cylinder rods for pitting, scoring, and other defects.
(2) Inspect the cylinder rod-to-barrel seals and the end gland seals for external hydraulic fluid leakage that exceeds the manufacturer's specifications.

19.8.5.8.2* The stabilizer extension cylinder shall be subjected to a drift test as follows:

(1) With the hydraulic fluid at ambient temperature, properly set the stabilizer's cylinders.
(2) Mark the cylinder position.
(3) Measure the drift after 1 hour with the engine off.
(4) Verify that the results do not exceed the manufacturer's specification for allowable stabilizer cylinder drift.

19.8.5.9 Holding Valves on Extension Cylinders. The holding valves on extension cylinders shall be inspected for external leakage of hydraulic fluid.

19.8.5.10 Operating Controls. The operating controls shall be inspected as follows:

(1) Inspect the operating controls to ensure control handles are not damaged or missing, functions are identified, operating instructions and warnings are posted, and no hydraulic fluid leakage has occurred.
(2) Verify that the controls operate smoothly, return to the neutral position when released, and do not bind during operation.
(3) If interlocks have been provided or are required to prevent unintentional operation of the aerial device, verify that the interlocks or locking devices are operating properly.

19.8.5.11 Leveling Indicator. If a leveling indicator(s) is provided to aid the operator in leveling the apparatus, the accuracy and legibility of the leveling indicator shall be checked.

19.8.5.12 Diverter Valve. The diverter valve shall be inspected for external hydraulic fluid leakage.

19.8.5.13 Positive Stops. The mechanical stabilizers shall be inspected for proper operation of the positive stops that prevent overextension.

19.8.5.14 Stabilizer Deployment. If the stabilizer system is operated hydraulically, the system shall be inspected to verify that it can be deployed within the time frame designated by the aerial device manufacturer.

19.8.5.15 Manual Spring Locks. The stabilizer manual spring locks shall be inspected for proper condition and operation.

19.8.5.16 Tractor Lockout Device. If the aerial ladder is tractor drawn, the spring lockout or fifth wheel lockout device(s), if supplied, shall be inspected for any discontinuities and for proper operation.

19.8.6 Aerial Ladder Inspection and Test. The aerial ladder shall be inspected in accordance with 19.8.6.1 through 19.8.6.30.

19.8.6.1 Structural Modifications, Improper Repairs, or Added Weight.

19.8.6.1.1 The aerial ladder shall be inspected for structural modifications or improper repairs.

19.8.6.1.2 The aerial ladder shall be inspected to determine that no extra equipment has been added to the aerial ladder without subtracting the weight of such equipment from the rated capacity.

19.8.6.1.3 Details of any structural modifications, improper repairs, or added weight shall be contained in the record required by 19.8.12.

Copyright National Fire Protection Association
Provided by IHS under license with NFPA
No reproduction or networking permitted without license from IHS
Not for Resale

19.8.6.2 Aerial Ladder Weldments. All aerial ladder weldments shall be inspected as follows:

(1) Visually inspect all of the accessible aerial ladder weldments for defects and all of the welds for fractures.
(2) (+) Inspect all accessible welds on the ladder.

19.8.6.3 Aerial Ladder Fasteners. All aerial ladder structural fasteners and fastened connections shall be inspected visually for cracked fasteners and material cracks around the fasteners.

19.8.6.4 Ladder Section Alignment. Measurements shall be taken to determine that the amount of ladder section twist or bow in the aerial ladder does not exceed the manufacturer's specifications for allowable ladder section twist or bow.

19.8.6.5 Hydraulic, Pneumatic, and Electrical Lines in Ladder Sections. All hydraulic, pneumatic, and electrical lines in ladder sections shall be inspected for proper mounting and for wear, cracking, kinks, and abrasions.

19.8.6.6 Top Rails. The top rails shall be inspected as follows:

(1) Inspect the top rails for straightness or any signs of misalignment.
(2) If the ladder is constructed of aluminum, perform one of the following:
   (a) (+) Take hardness readings at intervals of 12 in. (305 mm) or less on the last 10 ft (3 m) of each top rail section and compare the results with the manufacturer's specifications for the hardness of the material used for construction of the top rail.
   (b)*(+) If heat sensors are installed on the top rails, visually inspect the heat sensors for discoloration.
(3) (+) If the aerial device is constructed of aluminum and is painted, follow the manufacturer's recommendations for inspection.
(4) (+) If there is discoloration of heat sensor(s) or any indication of heat damage anywhere on an aluminum aerial device, take hardness readings at intervals of 12 in. (305 mm) or less between the heat-affected areas and compare the results with the manufacturer's specifications for the hardness of the material used for construction of the top rail.

19.8.6.7 Vertical and Diagonal Braces. The vertical and diagonal braces shall be inspected as follows:

(1) Inspect the verticals and diagonals for straightness, dents, and other deformities.
(2) (+) Inspect all accessible attachment welds.

19.8.6.8 Base Rails. The base rails shall be inspected as follows:

(1) Inspect the base rail for straightness and any signs of wear, ironing, dents, or corrosion.
(2)*(+) Inspect the bottom of all hollow I-beam base rails to determine that the thickness of the rail is not less than the manufacturer's minimum specifications.
(3) If the ladder is constructed of aluminum, perform one of the following:
   (a) (+) Take hardness readings at intervals of 28 in. (710 mm) or less along the entire length of both bottom rails and compare the results with the manufacturer's specifications for the hardness of the material used for construction of the top rail.
   (b)*(+) If heat sensors are installed on the base rails, visually inspect the heat sensors for discoloration.
   (c) (+) If the aerial ladder is painted, follow the manufacturer's recommendations for inspection.
   (4) (+) If there is discoloration of a heat sensor(s) or any indication of heat damage anywhere on an aluminum aerial device, take hardness readings at intervals of 12 in. (305 mm) or less between the heat-affected areas and compare the results with the manufacturer's specifications for the hardness of the material used for construction of the base rail.

19.8.6.9 Rungs. All rungs of the aerial ladder shall be inspected for straightness, signs of ladder lock damage, damaged or loose rung covers and rung cap castings, and signs of cracks or missing rivets, if applicable.

19.8.6.10 Folding Steps. The folding steps on the ladder shall be inspected as follows:

(1) Visually inspect the folding steps and folding step mounting brackets for defects and the welds for fractures.
(2) (+) Inspect all welds on the folding step(s) and folding step mounting brackets.

19.8.6.11 Rollers. All rollers shall be inspected for proper lubrication and operation and for any signs of wear.

19.8.6.12 Guides, Babbitts, Wear Strips, Pads, and Slide Blocks.

19.8.6.12.1 The guides shall be visually inspected for cracked welds, loose rivets, alignment problems, and any irregularities.

19.8.6.12.2 The babbitted areas of the base rail shall be free of paint and inspected for signs of wear.

19.8.6.12.3 The wear strips, pads, and slide blocks shall be inspected for wear and gouging and for proper mounting.

19.8.6.13 Extension Sheaves. The extension sheaves shall be inspected as follows:

(1) Inspect extension sheaves for signs of wear, free movement during operation, proper retainers, and proper lubrication.
(2) Visually inspect all extension sheave mounting brackets for defects and the welds for fractures.
(3) (+) Inspect all welds of extension sheave mounting brackets.

19.8.6.14 Extension Cables. The extension cables shall be inspected for compliance with Appendix A of SAE J959, *Lifting Crane, Wire-Rope Strength Factors*.

19.8.6.15 Extension and Retraction Motor. The extension and retraction motor shall be inspected for signs of external hydraulic fluid leakage and, where applicable, brake wear and brake alignment with the shaft.

19.8.6.16 Cable Separation Guide. During operation of the aerial ladder, the cable separation guide shall be inspected visually for free travel and any signs of misalignment.

19.8.6.17 Winch Holding Capacity. The winch shall be inspected for holding capacity as follows:

(1) Fully elevate the aerial ladder and extend it 10 ft (3 m).
(2) Measure the winch slippage for a 5-minute period.
(3) Verify that the slippage does not exceed the manufacturer's specifications.

19.8.6.18 Brake-Holding Capacity. The brake-holding capacity of the extension motor shall be inspected as follows:

(1) Fully elevate the aerial ladder and extend it 10 ft (3 m).
(2) Measure the brake slippage for a 5-minute period.
(3) Verify that the slippage does not exceed the manufacturer's specifications.

Copyright National Fire Protection Association
Provided by IHS under license with NFPA
No reproduction or networking permitted without license from IHS
Not for Resale

19.8.6.19 Extension, Elevation, and Rung Alignment Indicators. The elevation, extension, and rung alignment indicators shall be inspected for legibility, clarity, and accuracy.

19.8.6.20 Ladder Locks. The ladder lock mechanisms shall be inspected for proper mounting, alignment, lubrication, and operation.

19.8.6.21 Ladder Cradle.

19.8.6.21.1 The aerial ladder cradle shall be inspected as follows:

(1) Inspect the ladder cradle for wear and proper alignment, and inspect the cradle pad for damage.
(2) Visually inspect the ladder cradle for defects such as weld cracks, dents, or bends.
(3) (+) Inspect the ladder cradle welds and bracket attachments.

19.8.6.21.2 If the aerial ladder cradle is bolted, it shall be further inspected as follows:

(1) Inspect all accessible bolts for proper grade and installation as specified by the apparatus manufacturer.
(2) Using a properly calibrated torque wrench, verify that the bolt torque on all accessible mounting bolts meets the apparatus manufacturer's specifications.
(3) (+) Inspect all accessible bolts for internal flaws.

19.8.6.22 Ladder Bed Lock.

19.8.6.22.1 The ladder bed lock mechanism and hydraulic lines shall be inspected for proper mounting, signs of wear, and hydraulic fluid leakage at fittings.

19.8.6.22.2 The ladder bed lock shall be inspected to verify proper operation.

19.8.6.23 Stop Mechanism. The stop mechanisms shall be inspected to ensure that they prevent overextension or overretraction of the aerial ladder.

19.8.6.24 Maximum Extension Warning Device. During operation, if the aerial ladder is equipped with an audible device that warns of the approach of maximum extension, the device shall be inspected to verify proper operation.

19.8.6.25 Ladder Illumination. The lights that are used to illuminate the ladder shall be inspected for proper operation.

19.8.6.26 Extension Cylinder Anchor Ears and Plates.

19.8.6.26.1 The extension cylinder anchor ears and plates shall be inspected as follows:

(1) Visually inspect the extension cylinder anchor ears and plates for defects and the attaching welds for fractures.
(2) (+) Inspect the attaching welds of the extension cylinder anchor ears and plates.

19.8.6.26.2 If the extension cylinder anchor is bolted, it shall be further inspected as follows:

(1) Inspect all accessible bolts for proper grade and installation as specified by the apparatus manufacturer.
(2) Using a properly calibrated torque wrench, verify that the bolt torque on all accessible bolts meets the manufacturer's specifications.
(3) (+) Inspect all accessible bolts for internal flaws.

19.8.6.27 Extension Cylinder Pins. The extension cylinder pins shall be inspected as follows:

(1) Inspect the cylinder pins for proper installation and retention.
(2) (+) Inspect the cylinder pins for internal flaws.

19.8.6.28 Extension Cylinder.

19.8.6.28.1 The extension cylinder shall be inspected as follows:

(1) Inspect the cylinder rods for pitting, scoring, and other defects.
(2) Inspect the cylinder rod-to-barrel seal and the end gland seal for external hydraulic fluid leakage that exceeds the manufacturer's specifications.

19.8.6.28.2* The extension cylinder shall be subjected to a drift test as follows:

(1) With the hydraulic fluid at ambient temperature, place the aerial device at full elevation and 10 ft (3 m) of extension.
(2) Mark the cylinder position or the second aerial ladder section in relation to the base section.
(3) Allow the ladder to stand for 1 hour with the engine off.
(4) Measure the drift and verify that the results do not exceed the manufacturer's specifications for allowable cylinder drift.

19.8.6.29 Holding Valves on Extension Cylinder. The holding valves shall be inspected for external and internal hydraulic fluid leakage.

19.8.6.30 Tip Controls. If the aerial ladder is equipped with a secondary operating position at the tip, the controls shall be inspected as follows:

(1) Check that the control handles are not damaged or missing, functions are identified, and operating instructions and warnings are posted.
(2) Verify that the controls operate smoothly, return to neutral when released, and do not bind during operation.
(3) Verify that the turntable or lower controls will override the tip controls.
(4) Verify that any safety devices that are designed to operate in conjunction with the tip controls are fully operational.
(5) If the aerial ladder was built to the 1996 or a later edition of NFPA 1901, verify that the speed of the aerial ladder, when being operated from the tip controls, does not exceed the speeds permitted in the edition of NFPA 1901 to which the aerial ladder was manufactured.

19.8.7 Load Testing.

19.8.7.1* Tests shall be conducted when the wind velocity is less than 10 mph (16 km/hr).

19.8.7.2 Only those personnel who are essential to conduct the test shall be permitted near the apparatus during the test.

19.8.7.3 A watch shall be maintained during all load tests for any signs of instability, the development of conditions that could cause damage or permanent deformation, or twist that exceeds the aerial ladder manufacturer's allowance, and the test shall be discontinued immediately if such conditions develop.

19.8.7.4 Horizontal Load Test.

19.8.7.4.1 The aerial apparatus shall be on a hard, level surface with the stabilizers deployed in accordance with the manufacturer's instructions, and with the turntable level.

Copyright National Fire Protection Association
Provided by IHS under license with NFPA
No reproduction or networking permitted without license from IHS
Not for Resale

19.8.7.4.2* A test cable hanger shall be attached to the top section of the ladder as follows:

(1) If the ladder is rated at 500 lb (227 kg) or less, the cable hanger shall be attached to the top rung and centered.
(2) If the ladder is rated at greater than 500 lb (227 kg), the test cable hanger shall be attached to both base rails at the top rung.

19.8.7.4.3 The rated capacity that the ladder is designed to support in the horizontal position at full extension shall be determined from the manufacturer's load chart or operator's manual. If full extension is not permitted in the horizontal position with a specified rated capacity, the maximum permissible extension with a specified rated capacity shall be used for the purpose of this test.

19.8.7.4.4 The ladder shall be positioned as follows:

(1) For single-chassis apparatus, the ladder shall be rotated, if necessary, until it is positioned over the rear, and parallel to, the vehicle centerline.
(2) For a tractor-drawn apparatus, the ladder shall be positioned in the most stable position, as recommended by the manufacturer.

19.8.7.4.5 The ladder shall be placed in the horizontal position and extended to full extension or the maximum permitted extension as determined in 19.8.7.4.3. The base section shall not be permitted to rest in the bed.

19.8.7.4.6 The ladder section locks, either manual pawls or hydraulic holding valves, shall be applied properly.

19.8.7.4.7 The elevation cylinders' integral holding valve or shutoff safety valve shall be properly closed or applied.

19.8.7.4.8* A free-hanging weight that is equal to the rated capacity, as determined in 19.8.7.4.3, shall be applied gradually to the top section of the aerial ladder by utilizing a test weight container or other suitable means of applying the weight.

19.8.7.4.8.1 The weight shall be suspended by a cable and shall not be more than 3 ft (1 m) above the ground.

19.8.7.4.8.2 The combined weight of the test cable hanger and cable, the test weight container, and the test weights shall not exceed the rated capacity.

19.8.7.4.8.3 The weights shall be added to the ladder in a manner that does not shock load the ladder.

CAUTION: Dropping the weights and shock loading the ladder can damage the ladder.

19.8.7.4.9 The test weight shall be sustained by the unsupported aerial ladder for 5 minutes.

19.8.7.4.10 The test weight shall hang freely from the tip of the aerial ladder.

19.8.7.4.11 If the test weight hanger and ladder deflection are such that the test weight comes to rest on the ground, the ladder elevation shall be permitted to be raised slightly above the horizontal position.

19.8.7.4.12 The ladder shall not be moved while the test weight is applied.

CAUTION: Moving the ladder with a test weight applied could result in the application of forces that damage the ladder.

19.8.7.4.13 After removal of the test weight, a complete visual inspection shall be made of all load-supporting elements.

19.8.7.4.14 Any visually detectable signs of damage, permanent deformation, or twist exceeding the manufacturer's specifications shall constitute noncompliance with the load test requirements, and the aerial ladder shall be placed out of service.

19.8.7.5 Maximum Elevation Load Test.

19.8.7.5.1 The aerial apparatus shall be on a hard, level surface with the stabilizers deployed in accordance with the manufacturer's instructions, and with the turntable level.

19.8.7.5.2* A test cable hanger shall be attached to the top section of the ladder as follows:

(1) If the ladder is rated at 500 lb (227 kg) or less, the cable hanger shall be attached to the top rung and centered.
(2) If the ladder is rated at greater than 500 lb (227 kg), the test cable hanger shall be attached to both base rails at the top rung.

19.8.7.5.3 The maximum rated capacity that the ladder is designed to support in the maximum elevated position at full extension shall be determined from the manufacturer's load chart or operator's manual.

19.8.7.5.4 The ladder shall be rotated, if necessary, until the ladder is positioned over the rear and parallel to the vehicle centerline. Midship-mounted aerial ladders shall be permitted to be rotated slightly off of the vehicle centerline to apply the test load without interfering with the body of the apparatus.

19.8.7.5.5 The ladder shall be positioned at its maximum elevation and full extension.

19.8.7.5.6 The ladder section locks, either manual pawls or hydraulic holding valves, shall be applied properly.

19.8.7.5.7 The elevation cylinders' integral holding valve or shutoff safety valve shall be properly closed or applied.

19.8.7.5.8 A free-hanging weight that is equal to the rated capacity, as determined in 19.8.7.5.3, shall be applied gradually to the top rung of the aerial ladder by utilizing a test weight container or other suitable means of applying the weight.

19.8.7.5.8.1 The weight shall be suspended by a cable and shall not be more than 3 ft (1 m) above the ground.

19.8.7.5.8.2 The combined weight of the test cable hanger and cable, the test weight container, and the test weights shall not exceed the rated capacity.

19.8.7.5.8.3 The weights shall be added to the ladder in a manner that does not shock load the ladder.

CAUTION: Dropping the weights and shock loading the ladder can damage the ladder.

19.8.7.5.9 The test weight shall be sustained by the unsupported aerial ladder for 5 minutes.

19.8.7.5.10 The test weight shall hang freely from the tip of the aerial ladder.

19.8.7.5.11 The ladder shall not be moved while the test weight is applied.

CAUTION: Moving the ladder with a test weight applied could result in the application of forces that damage the ladder.

Copyright National Fire Protection Association
Provided by IHS under license with NFPA
No reproduction or networking permitted without license from IHS
Not for Resale

19.8.7.5.12 After removal of the test weight, a complete visual inspection shall be made of all load-supporting elements.

19.8.7.5.13 Any visually detectable signs of damage, permanent deformation, or twist exceeding the manufacturer's specifications shall constitute noncompliance with the load test requirements, and the aerial ladder shall be placed out of service.

19.8.8 Operating Test.

19.8.8.1 After the load tests have been conducted, the ladder shall be fully elevated out of the bed, rotated 90 degrees, and fully extended.

19.8.8.2* The procedure specified in 19.8.8.1 shall be completed smoothly and without undue vibration within the time permitted by the edition of NFPA 1901 in effect at the time of manufacture.

19.8.8.3 After completing the procedure specified in 19.8.8.1, the ladder shall be retracted, the turntable rotation completed through 360 degrees, and the ladder lowered to its bed.

19.8.8.4 During the test, the proper operation of all ladder controls shall be verified.

19.8.8.5 After the procedure specified in 19.8.8.1 through 19.8.8.4 is completed, a thorough inspection shall be made of all moving parts.

19.8.8.6 The security and adjustment of the ladder cables or chains shall be checked for proper tension and retention in accordance with the manufacturer's specifications.

19.8.9 Waterway System Test.

19.8.9.1 The following inspection and test shall apply only to permanently piped, aerial ladder waterway systems.

19.8.9.2 The waterway system shall be inspected as follows:

(1) Inspect the system for proper operation of all components.
(2) Inspect the system for rust, corrosion, blockage, or other defects.

19.8.9.3 The waterway-attaching brackets shall be inspected as follows:

(1) Inspect the brackets for loose bolts, weld fractures, or other defects.
(2) (+) Inspect all attaching welds.

19.8.9.4 Pressure Test. The water system shall be pressure tested as specified in 19.8.9.4.1 through 19.8.9.4.3.

19.8.9.4.1* The aerial device shall be positioned between 0 degrees and 10 degrees elevation and fully retracted.

19.8.9.4.1.1 If there is no valve located at the discharge end, a valve shall be attached for the purpose of the test.

19.8.9.4.1.2* The water system shall be filled with water, and the valve at the discharge end shall be closed.

CAUTION: For safety reasons, all air must be removed from the system.

19.8.9.4.1.3 The pressure on the system shall be raised to the water system manufacturer's maximum rated working pressure and shall be maintained while the operations and inspections required by 19.8.9.4.1.4 and 19.8.9.4.1.5 are conducted.

19.8.9.4.1.4 The aerial device shall be raised to full elevation and rotated 360 degrees.

19.8.9.4.1.5 The water system, including the turntable swivel, shall be checked for leaks.

19.8.9.4.1.6 Care shall be taken not to overheat the water pump during this test.

19.8.9.4.2* The aerial device shall then be positioned between 0 degrees and 10 degrees elevation and extended to its maximum permissible limit.

19.8.9.4.2.1 The water system shall be filled with water, all air shall be removed from the system, and the valve at the discharge end shall be closed.

CAUTION: Failure to remove all air from the water system could result in injury if there is a component failure during the test.

19.8.9.4.2.2 The pressure on the system shall be raised to the water system manufacturer's maximum rated working pressure and maintained while the inspections required by 19.8.9.4.2.3 are conducted.

19.8.9.4.2.3 The entire length of the water system shall be checked for leaks.

19.8.9.4.2.4 Care shall be taken not to overheat the water pump during the test.

19.8.9.4.3* The water system shall operate properly and with an absence of leaks during the tests.

19.8.9.5 Flowmeters.

19.8.9.5.1 If the waterway system is equipped with a flowmeter(s), the flowmeter(s) shall be tested at the water system manufacturer's maximum rated water system flow.

19.8.9.5.2 Any meter that reads off by more than 10 percent shall be recalibrated, repaired, or replaced.

19.8.9.6 Water Pressure Gauges.

19.8.9.6.1 If the waterway system is equipped with a water pressure gauge(s), each water pressure gauge(s) shall be checked for accuracy at a minimum of three points at 50 psi (345 kPa) intervals without exceeding the maximum rated working pressure of the waterway system.

19.8.9.6.2 Any gauge that reads off by more than 10 psi (70 kPa) shall be recalibrated, repaired, or replaced.

19.8.9.7 Relief Valve.

19.8.9.7.1 If the waterway system is equipped with a relief valve, the relief valve shall be checked to verify that it is operational at the waterway manufacturer's recommended pressure setting.

19.8.9.7.2 Any relief valve that fails to operate within 10 psi (70 kPa) of the manufacturer's required setting shall be repaired, recalibrated, or replaced.

19.8.10 Signs. All signs shall be inspected to verify they are in place and legible.

19.8.11* Hydraulic Fluid. After the operating tests have been performed, a sample of the hydraulic fluid shall be removed from the hydraulic reservoir and subjected to spectrochemical analysis, particle count, viscosity check, and water content analysis.

Copyright National Fire Protection Association
Provided by IHS under license with NFPA
No reproduction or networking permitted without license from IHS
Not for Resale

19.8.12* Records. A comprehensive record shall be completed for all inspections and tests of the aerial ladder and signed by the person responsible for the test.

19.8.12.1 When the torque verification of mounting bolts is performed as required by this standard, the bolt size, grade, and torque specifications shall be recorded.

19.8.12.2 When an NDT is conducted, the test record shall indicate the NDT method used in each inspected area.

19.8.12.3 Where this standard requires measurements to be taken — such as bearing clearance and backlash, cylinder drift, relief pressure, ladder section twist, hardness readings, base rail thickness, extension brake drift, and winch drift — these measurements shall be recorded in the test record so that a year-to-year comparison can be made.

19.9 Inspecting and Testing Elevating Platforms.

19.9.1 General.

19.9.1.1 In addition to the manufacturer's recommendations for annual inspections and tests, the inspections and tests detailed in 19.9.2 through 19.9.16 shall be performed.

19.9.1.2 An inspection preceded by a plus sign (+) indicates that an appropriate NDT shall be conducted as required by 19.1.2.

19.9.2 Service Records. The elevating platform's service records shall be checked for any reports that indicate defective conditions.

19.9.3 Hydraulic Components. Hydraulic components shall show no signs of hydraulic fluid leakage.

19.9.3.1 A component shall be considered to be leaking if hydraulic fluid (oil) droplets are forming on the component.

19.9.3.2 A film of hydraulic fluid on the component shall not be considered severe enough to categorize the component as leaking.

19.9.4 Turntable and Torque Box Inspection and Test. The turntable and torque box components, where applicable, shall be inspected in accordance with 19.8.4.1, 19.8.4.2, 19.8.4.4 through 19.8.4.13, and 19.8.4.18 through 19.8.4.29.

19.9.5 Stabilizer Inspection and Test. The stabilizer components, where applicable, shall be inspected in accordance with 19.8.5.1 through 19.8.5.14.

19.9.6 Platform and Boom Inspection and Test. The platform and booms shall be inspected in accordance with 19.9.6.1 through 19.9.6.12.

19.9.6.1 Structural Modifications, Improper Repairs, or Added Weight.

19.9.6.1.1 The platform and booms shall be inspected for structural modifications or improper repairs.

19.9.6.1.2 The platform shall be inspected to determine that no extra equipment has been added to the platform without subtracting the weight of such equipment from the rated capacity.

19.9.6.1.3 Details of any structural modifications, improper repairs, or added weight shall be contained in the required report.

19.9.6.2 Platform Mounting Brackets. The platform mounting brackets shall be inspected as follows:

(1) Visually inspect all platform mounting brackets for defects, such as weld cracks, dents, or bends.
(2) (+) Inspect all welds in the platform mounting brackets.
(3) (+) Inspect all bolts and pins structurally involved with the platform mounting to the ladder or boom for internal flaws.

19.9.6.3 Platform. The platform shall be inspected as follows:

(1) Visually inspect the platform for defects, such as weld cracks, dents, or bends.
(2) (+) Inspect all welds on the platform.

19.9.6.4 Hydraulic, Pneumatic, and Electrical Lines in the Platform. All hydraulic, pneumatic, and electrical lines shall be inspected for proper mounting, wear, cracking, kinks, and abrasions.

19.9.6.5 Auxiliary Winch Mounting. The auxiliary winch mounting shall be inspected as follows:

(1) Inspect all mounting bolts for proper grade and installation as specified by the apparatus manufacturer.
(2) Using a calibrated torque wrench, verify that the torque on all winch mounting bolts meets the apparatus manufacturer's specifications.
(3) If welded, visually inspect the winch mounting for weld fractures.
(4) (+) Inspect the mounting bolts for internal flaws.
(5) (+) If brackets are welded, inspect all welds on the mounting brackets.

19.9.6.6 Winch Controls. The winch controls shall be inspected as follows:

(1) Inspect controls for proper identification as to function and operation.
(2) Verify smooth operation of the winch controls.

19.9.6.7 Elevating Platform Rated Capacity Identification. The elevating platform rated capacity identification plate shall be checked to verify that it is present, proper, and legible.

19.9.6.8 Platform Gate Latches and Hinge Points.

19.9.6.8.1 The platform gate latches shall be inspected for proper alignment.

19.9.6.8.2 The latch and hinges shall be inspected for smooth operation.

19.9.6.9 Platform Hinge Pins. The platform hinge pins shall be inspected as follows:

(1) Inspect platform hinge pins for proper installation, lubrication, and any irregularities.
(2) (+) Inspect the platform hinge pins for internal flaws.

19.9.6.10 Platform Controls. The platform controls shall be inspected as follows:

(1) Inspect the platform operating controls to ensure control handles are not damaged or missing, functions are identified, and operating instructions and warnings are posted.
(2) Verify that the controls operate smoothly, return to neutral when released, and do not bind during operation.
(3) Verify that the turntable or lower controls will override the platform controls.

19.9.6.11 Platform Monitor and Nozzle. The platform monitor and nozzle shall be inspected as follows:

(1) Inspect the complete operation of the platform monitor and nozzle.

Copyright National Fire Protection Association
Provided by IHS under license with NFPA
No reproduction or networking permitted without license from IHS
Not for Resale

(2) Inspect the monitor mounting brackets for any defects and their welds for fractures.

19.9.6.12 Boom Illumination. The operation of spotlights used to illuminate the boom shall be verified.

19.9.7 Articulating Boom–Lower Boom Inspection and Test. For apparatus equipment with an articulating boom, the lower boom shall be inspected and tested in accordance with 19.9.7.1 through 19.9.7.14.

19.9.7.1 Hinge Pins. The hinge pins shall be inspected as follows:

(1) Inspect the boom hinge pins for proper installation, lubrication, operation, and any discontinuities.
(2) (+) Inspect the boom hinge pins for internal flaws.

19.9.7.2 Lower Boom Elevation Cylinder Anchor Ears and Plates. The lower boom elevation cylinder anchor ears and plates shall be inspected as follows:

(1) Visually inspect the anchor ears and plates for defects and the attaching welds for fractures.
(2) (+) Inspect all welds on the anchor ears and plates.

19.9.7.3 Lower Boom Elevation Cylinders.

19.9.7.3.1 The lower boom elevation cylinder(s) shall be inspected as follows:

(1) Inspect the cylinder rod(s) for pitting, scoring, and other defects.
(2) Inspect the cylinder rod-to-barrel seal and the end gland seal for external hydraulic fluid leakage that exceeds the manufacturer's specifications.

19.9.7.3.2* The lower boom elevation cylinder shall subjected to a drift test as follows:

(1) With the hydraulic fluid at ambient temperature, take measurements of the drift in accordance with the manufacturer's recommendations.
(2) Verify that the results of the measurements do not exceed the manufacturer's specifications for allowable lower boom cylinder drift.

19.9.7.4 Holding Valves on Lower Boom Elevation Cylinder. The holding valve(s) shall be inspected for signs of external hydraulic fluid leakage.

19.9.7.5 Boom Assembly. The lower boom assembly shall be inspected as follows:

(1) Visually inspect the boom for defects, such as weld cracks, dents, or bends.
(2) Visually inspect all structural fasteners and fastener connections for cracked fasteners and material cracks around the fasteners.
(3) (+) Inspect all welds on the boom for any structural discontinuities.
(4) If the lower boom assembly is constructed of aluminum, perform one of the following:
   (a) (+) Take hardness readings at intervals of 28 in. (710 mm) or less along the length of lower boom assembly and compare the results with the manufacturer's specifications for the hardness of the material used for construction of the lower boom assembly.
   (b)*(+) If heat sensors are installed on the lower boom assembly, visually inspect the heat sensors for discoloration.
   (c) (+) If the boom assembly is painted, follow the manufacturer's recommendations for inspection.
(5) (+) If there is discoloration of a heat sensor(s) or any indication of heat damage anywhere on an aluminum boom assembly, take hardness readings at intervals of 12 in. (305 mm) or less between the heat-affected areas and compare the results with the manufacturer's specifications for the hardness of the material used for construction of the boom assembly.

19.9.7.6 Cylinder Link Pins. The cylinder link pins shall be inspected as follows:

(1) Inspect the cylinder link pins for proper installation, lubrication, operation, and any fractures.
(2) (+) Inspect the cylinder link pins for internal flaws.

19.9.7.7 Platform-Leveling Linkages. The platform-leveling linkages shall be inspected as follows:

(1) Visually inspect linkages for defects, such as weld cracks, dents, and bends.
(2) (+) Inspect all welds of the leveling assembly.
(3) (+) Inspect all leveling linkage pins for any internal flaws.

19.9.7.8 Hydraulic Lines and Hoses in Lower Boom. All hydraulic lines and hoses in the lower boom shall be inspected for proper mounting, abrasion, hydraulic fluid leakage, and wear.

19.9.7.9 Hydraulic Lines in Knuckle. All hydraulic lines in the knuckle shall be inspected for hydraulic fluid leakage, abrasion, and any signs of wear.

19.9.7.10 Cables, Chains, and Rods. All cables, chains, and rods shall be inspected for signs of wear and for proper adjustment.

19.9.7.11 Sprockets, Pulleys, and Hooks. All sprockets, pulleys, and hooks shall be inspected for lubrication, signs of wear, distortion, and proper operation.

19.9.7.12 Boom Support.

19.9.7.12.1 The boom support shall be inspected as follows:

(1) Inspect the boom support for wear and proper alignment, and inspect the cradle pad for damage.
(2) Visually inspect the boom support for defects, such as weld cracks, dents, or bends.
(3) (+) Inspect the boom support welds and bracket attachment.

19.9.7.12.2 If the boom support is bolted, it shall be further inspected as follows:

(1) Inspect all accessible bolts for proper grade and installation as specified by the apparatus manufacturer.
(2) Using a properly calibrated torque wrench, verify that the bolt torque on all accessible mounting bolts meets the apparatus manufacturer's specifications.
(3) (+) Inspect all accessible bolts for internal flaws.

19.9.7.13 Lower Boom Angle Indicator Lights. The lower boom angle indicator lights shall be inspected to verify that they are operating properly.

19.9.7.14 Pneumatic and Electrical Lines. All pneumatic and electrical lines in the lower boom and the knuckle shall be inspected for proper mounting, wear, cracking, kinks, and abrasions.

--`,,```,,,,````-`-`,,`,,`,`,,`---
Copyright National Fire Protection Association
Provided by IHS under license with NFPA
No reproduction or networking permitted without license from IHS
Not for Resale

19.9.8 Articulating Boom–Upper Boom Inspection and Test. For apparatus equipment with an articulating boom, the upper boom shall be inspected and tested in accordance with 19.9.8.1 through 19.9.8.15.

19.9.8.1 Upper Boom for Alignment with Lower Boom. The upper boom shall be inspected to verify it is aligned with the lower boom.

19.9.8.2 Platform-Leveling Linkages. The platform-leveling linkages shall be inspected as follows:

(1) Visually inspect linkages for defects, such as weld cracks, dents, and bends.
(2) (+) Inspect all welds of the leveling assembly.
(3) (+) Inspect all leveling linkage pins for any internal flaws.

19.9.8.3 Boom Boost Cylinder Brackets. The boom boost cylinder brackets shall be inspected as follows:

(1) Visually inspect the boom boost cylinder brackets for defects, such as weld cracks, dents, or bends.
(2) (+) Inspect the boom boost cylinder bracket welds.

19.9.8.4 Boom Boost Cylinders. The boom boost cylinders shall be inspected for any external hydraulic fluid leakage.

19.9.8.5 Cylinder Link Pins. The cylinder link pins shall be inspected as follows:

(1) Visually inspect the cylinder link pins for proper installation, lubrication, operation, and any irregularities.
(2) (+) Inspect the cylinder link pins for internal flaws.

19.9.8.6 Boom Assembly. The upper boom assembly shall be inspected as follows:

(1) Visually inspect the boom for defects, such as weld cracks, dents, or bends.
(2) Visually inspect all structural fasteners and fastener connections for cracked fasteners and material cracks around the fasteners.
(3) (+) Inspect all welds on the boom.
(4) If the upper boom assembly is constructed of aluminum, perform one of the following:
   (a) (+) Take hardness readings at intervals of 28 in. (710 mm) or less along the length of upper boom assembly and compare the results with the manufacturer's specifications for the hardness of the material used for construction of the upper boom assembly.
   (b)*(+) If heat sensors are installed on the upper boom assembly, visually inspect the heat sensors for discoloration.
   (c) (+) If the boom assembly is painted, follow the manufacturer's recommendations for inspection.
(5) (+) If there is discoloration of a heat sensor(s) or any indication of heat damage anywhere on an aluminum boom assembly, take hardness readings at intervals of 12 in. (305 mm) or less between the heat-affected areas and compare the results with the manufacturer's specifications for the hardness of the material used for construction of the boom assembly.

19.9.8.7 Hydraulic Lines and Hoses in Upper Boom. All hydraulic lines and hoses in the upper boom shall be inspected for proper mounting, abrasions, hydraulic fluid leakage, and wear.

19.9.8.8 Cables, Chains, and Rods. All cables, chains, and rods shall be inspected for signs of wear and for proper adjustment.

19.9.8.9 Sprockets, Pulleys, and Hooks. All sprockets, pulleys, and hooks shall be inspected for lubrication, signs of wear, distortion, and proper operation.

19.9.8.10 Upper Boom Hold-Down Device. The upper boom hold-down device shall be inspected as follows:

(1) Visually inspect the upper boom hold-down device for defects and for proper operation.
(2) (+) Inspect all welds of the upper boom hold-down device.

19.9.8.11 Safety Stop Mechanism. The safety stop mechanism shall be verified to be operating properly.

19.9.8.12 Upper Boom Elevation Cylinder Anchor Ears and Plates. The upper boom elevation anchor ears and plates shall be inspected as follows:

(1) Visually inspect the anchor ears and plates for defects and the attaching welds for fractures.
(2) (+) Inspect all welds on the anchor ears and plates.

19.9.8.13 Upper Boom Elevation Cylinder(s).

19.9.8.13.1 The upper boom elevation cylinder(s) shall be inspected as follows:

(1) Inspect the cylinder rod(s) for pitting, scoring, and other defects.
(2) Inspect the cylinder rod-to-barrel seal and the end gland seal for external hydraulic fluid leakage that exceeds the manufacturer's specifications.

19.9.8.13.2* The upper boom elevation cylinder(s) shall be subjected to a drift test as follows:

(1) With the hydraulic fluid at ambient temperature, take measurements of the drift in accordance with the manufacturer's recommendations.
(2) Verify that the results of the measurements do not exceed the manufacturer's specifications for allowable upper boom cylinder drift.

19.9.8.14 Holding Valves on Upper Boom Elevation Cylinder. The holding valve(s) shall be inspected for signs of external hydraulic fluid leakage.

19.9.8.15 Pneumatic and Electrical Lines. All pneumatic and electrical lines in the upper boom shall be inspected for proper mounting, wear, cracking, kinks, and abrasions.

19.9.9 Telescoping Boom Inspection and Test. For platforms equipped with a telescoping boom, the boom shall be inspected and tested in accordance with 19.8.4.14 through 19.8.4.17, 19.9.7.10 through 19.9.7.12, and 19.9.9.1 through 19.9.9.14.

19.9.9.1 Boom Assemblies. The boom assemblies shall be inspected as follows:

(1) Visually inspect the boom assembly for defects, such as weld cracks, dents, or bends.
(2) Visually inspect all structural fasteners and fastener connections for cracked fasteners and material cracks around the fasteners.
(3) (+) Inspect all welds on booms.
(4) If the boom assembly is constructed of aluminum, perform one of the following:
   (a) (+) Take hardness readings at intervals of 28 in. (710 mm) or less along the length of boom assembly and compare the results with the manufacturer's specifications for the hardness of the material used for construction of the boom assembly.

Copyright National Fire Protection Association
Provided by IHS under license with NFPA
No reproduction or networking permitted without license from IHS
Not for Resale

(b)*(+) If heat sensors are installed on the boom assembly, visually inspect the heat sensors for discoloration.
(c) (+) If the boom assembly is painted, follow the manufacturer's recommendations for inspection.

(5) (+) If there is discoloration of a heat sensor(s) or any indication of heat damage anywhere on an aluminum boom assembly, take hardness readings at intervals of 12 in. (305 mm) or less between the heat-affected areas and compare the results with the manufacturer's specifications for the hardness of the material used for construction of the boom assembly.

19.9.9.2 Ancillary Boom Ladder. The ancillary boom ladder shall be inspected as follows:

(1) Inspect the ancillary boom ladder for any defects and the welds for fractures.
(2) Inspect the mounting brackets for loose bolts, weld fractures, or other defects.
(3) (+) Inspect all welds on the ladder and attaching welds.

19.9.9.3 Guides, Wear Strips and Pads, and Slide Blocks. Guides, wear strips and pads, and slide blocks shall be inspected for proper installation and signs of wear.

19.9.9.4 Extension Sheaves. The extension sheaves shall be inspected as follows:

(1) Inspect the extension sheaves for proper mounting, alignment, and signs of wear.
(2) (+) Inspect all welds of the extension sheave mounting brackets.
(3) (+) Inspect the retaining bolt for internal flaws.

19.9.9.5 Extension Cables. Extension cables shall be inspected for compliance with Appendix A of SAE J959.

19.9.9.6 Elevation Indicator. The elevation cylinder indicator shall be inspected for legibility and clarity.

19.9.9.7 Maximum Extension Warning Device. During operation, if the elevating platform is equipped with an audible device that warns of the approach of maximum extension, the device shall be inspected to verify proper operation.

19.9.9.8 Platform-Leveling Cylinders. The platform leveling cylinders shall be inspected as follows:

(1) Inspect the cylinder rod(s) for pitting, scoring, and other defects.
(2) Inspect the cylinder rod-to-barrel seal and the end gland seal for external hydraulic fluid leakage that exceeds the manufacturer's specifications.
(3) Visually inspect the leveling system for proper installation.
(4) Visually inspect the mounting of the leveling system for defects and the welds for fractures.
(5) (+) Inspect all welds for mounting of the leveling system.
(6) (+) Inspect all leveling cylinder pins for any internal flaws.

19.9.9.9 Hydraulic Lines and Hoses in Boom Assemblies. All hydraulic lines and hoses in the boom assemblies shall be inspected for hydraulic fluid leakage, abrasions, and any signs of wear.

19.9.9.10 Extension Cylinder Anchor Ears and Plates. The extension cylinder anchor ears and plates shall be inspected as follows:

(1) Visually inspect the extension cylinder anchor ears and plates for defects and the attaching welds for fractures.
(2) (+) Inspect the extension cylinder anchor ears and the plate-attaching welds.

19.9.9.11 Extension Cylinder Pins. The extension cylinder pins shall be inspected as follows:

(1) Inspect the cylinder pins for proper installation and retention.
(2) (+) Inspect the cylinder pins for internal flaws.

19.9.9.12 Extension Cylinder.

19.9.9.12.1 The extension cylinder shall be inspected as follows:

(1) Inspect the cylinder rods for pitting, scoring, and other defects.
(2) Inspect the cylinder rod-to-barrel seal and the end gland seal for external hydraulic fluid leakage that exceeds the manufacturer's specifications.

19.9.9.12.2* The extension cylinder shall be subjected to a drift test as follows:

(1) With the hydraulic fluid at ambient temperature, place the aerial device at full elevation and 10 ft (3 m) of extension.
(2) Mark the cylinder position or the second boom section in relation to the base section.
(3) Allow the elevating platform to stand for 1 hour with the engine off.
(4) Measure the drift, and verify that the results do not exceed the manufacturer's specifications for allowable cylinder drift.

19.9.9.13 Holding Valves on Extension Cylinder. The holding valves shall be inspected for external hydraulic fluid leakage.

19.9.9.14 Pneumatic and Electrical Lines. All pneumatic and electrical lines in the booms shall be inspected for proper mounting, wear, cracking, kinks, and abrasions.

19.9.10 Diagnostic Check from Lower Controls.

19.9.10.1 With engine speed set to allow maximum speed as permitted by the manufacturer, the elevating platform shall be operated in all positions, as allowed by the manufacturer, using the lower or ground controls.

19.9.10.2 The operation of the elevating platform shall include, but not be limited to, moving the platform from ground to maximum elevation, as well as revolving the platform 360 degrees to the left and to the right while the unit is at its maximum horizontal reach.

19.9.10.3 All safety devices shall operate properly.

19.9.10.4 All controls shall operate smoothly, return to the neutral position when released, and not bind during operation.

19.9.10.5 Rollers, slides, and sheave wheels on telescoping elevating platforms shall be checked for proper alignment, function, and free operation.

19.9.11 Diagnostic Check from Platform Controls.

19.9.11.1 With engine speed set to allow maximum speed as permitted by the manufacturer, the elevating platform shall be operated from the platform control station through all positions, as allowed by the manufacturer, with only the operator on the platform.

19.9.11.2 The operation of the elevating platform shall include, but not be limited to, movement of the platform from ground to maximum elevation, as well as revolving the platform 360 degrees to the left and to the right while the unit is at its maximum horizontal reach.

Copyright National Fire Protection Association
Provided by IHS under license with NFPA
No reproduction or networking permitted without license from IHS
Not for Resale

19.9.11.3 All safety devices shall operate properly.

19.9.11.4 The platform deactivation control, from the ground or lower controls, shall be demonstrated to operate properly.

19.9.11.5 The platform shall level properly as the booms are moved through all allowable positions.

19.9.11.6 The mechanical override on a hydraulically leveled platform shall operate properly during emergency lowering of the boom without hydraulic power.

19.9.12 Load Test.

19.9.12.1 The aerial apparatus shall be positioned on a hard, level surface with room for unrestricted boom movements.

19.9.12.2 The stabilizers shall be deployed in accordance with the manufacturer's instructions.

19.9.12.3 A watch shall be maintained during all load tests for any signs of instability, the development of conditions that could cause damage or permanent deformation, or twist that exceeds the elevating platform manufacturer's allowance, and the test shall be discontinued immediately if such conditions develop.

19.9.12.4 The platform shall be placed near the ground and loaded to the elevating platform's rated capacity minus the weight of equipment added to the platform after delivery.

19.9.12.5 The platform load shall be secured properly.

19.9.12.6 The unit shall be operated from the lower controls through all allowable phases of operation. The manufacturer's operational limits shall not be exceeded.

19.9.12.7 Boom movements shall exhibit no abnormal noise, vibration, or deflection.

19.9.12.8 The platform shall level properly as the booms are moved through all allowable positions.

19.9.12.9 At the conclusion of the load test, weld joints at the stabilizer structure, stabilizers, frame, main frame, frame reinforcements, turntable, cylinder anchors, boom joints, leveling system, platform, and pivot pin bosses shall be inspected and shall show no signs of deterioration.

19.9.13 Operating Test.

19.9.13.1 After the load tests have been conducted, a complete test of the elevating platform's operation shall be conducted using the lower or ground controls.

19.9.13.2 The elevating platform shall be raised out of the bed, extended to its full height, and rotated through a 90-degree turn.

19.9.13.3* The procedure specified in 19.9.13.2 shall be completed smoothly and without undue vibration within the time permitted by the edition of NFPA 1901 in effect at the time of manufacture.

19.9.13.4 After the procedure specified in 19.9.13.2 is completed, the elevating platform shall be retracted, the turntable rotation shall be completed through 360 degrees, and the elevating platform shall be lowered to its bed.

19.9.13.5 During the test, the proper operation of all elevating platform controls shall be verified.

19.9.13.6 After the procedure specified in 19.9.13.1 through 19.9.13.5 is completed, a thorough inspection shall be made of all moving parts.

19.9.14 Water System Inspection and Test.

19.9.14.1 The waterway system shall be inspected as follows:

(1) Inspect the system for proper operation of all components.
(2) Inspect the system for rust, corrosion, blockage, or other defects.

19.9.14.2 The waterway-attaching brackets shall be inspected as follows:

(1) Inspect the brackets for loose bolts, weld fractures, or other defects.
(2) (+) Inspect all attaching welds.

19.9.14.3 Pressure Test. The water system shall be pressure tested.

19.9.14.3.1 If the elevating platform has a telescoping boom, the water system shall be tested following the procedures in 19.8.9.4.1 and 19.8.9.4.2.

19.9.14.3.2* If the elevating platform has an articulating boom, the water system shall be tested in accordance with 19.9.14.3.2.1 through 19.9.14.3.2.6.

19.9.14.3.2.1 The boom shall be positioned in the road-travel position.

19.9.14.3.2.2 If no valve is located at the discharge end of the water system, a valve shall be attached for the purpose of the test.

19.9.14.3.2.3 The water system shall be filled with water, all air shall be removed from the system, and the valve at the discharge end shall be closed.

CAUTION: Failure to remove all air from the water system could result in injury if there is a component failure during the test.

19.9.14.3.2.4 The pressure on the system shall be raised to the water system manufacturer's maximum rated working pressure and shall be maintained while the elevating platform is raised to its rated vertical height and rotated 360 degrees.

19.9.14.3.2.5 The water system, including the turntable swivel, shall be checked for leaks.

19.9.14.3.2.6 Care shall be taken not to overheat the water pump.

19.9.14.3.3 If the elevating platform has both a telescoping boom and an articulating boom, it shall be tested in accordance with 19.9.14.3.1 and 19.9.14.3.2.

19.9.14.3.4* The water system shall operate properly and with an absence of leaks during the pressure test.

19.9.14.4 Flowmeters.

19.9.14.4.1 If the waterway system is equipped with a flowmeter(s), the flowmeter(s) shall be tested at the water system manufacturer's maximum rated water system flow.

19.9.14.4.2 Any meter that reads off by more than 10 percent shall be recalibrated, repaired, or replaced.

19.9.14.5 Water Pressure Gauges.

19.9.14.5.1 If the waterway system is equipped with a water pressure gauge(s), each water pressure gauge(s) shall be checked for accuracy at a minimum of three points at 50 psi (345 kPa) intervals without exceeding the maximum rated working pressure of the waterway system.

Copyright National Fire Protection Association
Provided by IHS under license with NFPA
No reproduction or networking permitted without license from IHS
Not for Resale

19.9.14.5.2 Any gauge that reads off by more than 10 psi (70 kPa) shall be recalibrated, repaired, or replaced.

19.9.14.6 Relief Valve.

19.9.14.6.1 If the waterway system is equipped with a relief valve, the relief valve shall be checked to verify that it is operational at the waterway manufacturer's recommended pressure setting.

19.9.14.6.2 Any relief valve that fails to operate within 10 psi (70 kPa) of the manufacturer's required setting shall be repaired, recalibrated, or replaced.

19.9.15 Signs. All signs shall be inspected to verify they are in place and legible.

19.9.16* Hydraulic Fluid. After the operating tests have been performed, a sample of the hydraulic fluid shall be removed from the hydraulic reservoir and subjected to spectrochemical analysis, particle count, viscosity check, and water content analysis.

19.9.17* Records. A comprehensive record shall be completed for all inspections and tests of the elevating platform and signed by the person responsible for the test.

19.9.17.1 When the torque verification of mounting bolts is performed as required by this standard, the bolt size, grade, and torque specifications shall be recorded.

19.9.17.2 When an NDT is conducted, the test record shall indicate the NDT method used in each inspected area.

19.9.17.3 Where this standard requires measurements to be taken — such as bearing clearance and backlash, cylinder drift, relief pressure, ladder section twist, hardness readings, base rail thickness, extension brake drift, and winch drift — these measurements shall be recorded in the test record so that a year-to-year comparison can be made.

19.10 Inspecting and Testing Water Towers.

19.10.1 General.

19.10.1.1 In addition to the manufacturer's recommendations for annual inspections and tests, the inspections and tests detailed in 19.10.2 through 19.10.13 shall be performed.

19.10.1.2 An inspection preceded by a plus sign (+) indicates that an appropriate NDT shall be conducted as required by 19.1.2.

19.10.2 Service Records. The water tower's service records shall be checked for any reports that indicate defective conditions.

19.10.3 Hydraulic Components. Hydraulic components shall show no signs of hydraulic fluid leakage.

19.10.3.1 A component shall be considered to be leaking if hydraulic fluid (oil) droplets are forming on the component.

19.10.3.2 A film of hydraulic fluid on the component shall not be considered severe enough to categorize the component as leaking.

19.10.4 Turntable and Torque Box Inspection and Test. The turntable and torque box components, where applicable, shall be inspected on all water tower apparatus in accordance with 19.8.4.1, 19.8.4.2, and 19.8.4.4 through 19.8.4.29.

19.10.5 Stabilizer Inspection and Test. The stabilizer components, where applicable, shall be inspected on all water tower apparatus in accordance with 19.8.5.1 through 19.8.5.14.

19.10.6 Aerial Ladder Inspection and Test. For a water tower apparatus that is equipped with an aerial ladder, the aerial ladder shall be inspected and tested in accordance with 19.8.6 and 19.8.7.

19.10.7 Articulating Boom–Lower Boom Inspection and Test. For a water tower apparatus that is equipped with an articulating boom, the lower boom shall be inspected and tested in accordance with 19.9.7.1 through 19.9.7.6 and 19.9.7.8 through 19.9.7.14, as applicable.

19.10.8 Articulating Boom–Upper Boom Inspection and Test. For a water tower apparatus that is equipped with an articulating boom, the upper boom shall be inspected and tested in accordance with 19.9.8.1 and 19.9.8.3 through 19.9.8.15, as applicable.

19.10.9 Telescoping Boom Inspection and Test. For a water tower apparatus that is equipped with a telescoping boom, the boom shall be inspected and tested in accordance with 19.9.7.10 through 19.9.7.14, 19.9.9.1 through 19.9.9.7, and 19.9.9.9 through 19.9.9.14, as applicable.

19.10.10 Operating Test.

19.10.10.1 After starting the engine, setting the stabilizers, and transmitting power to the water tower, the water tower shall be fully elevated out of the bed, rotated 90 degrees, and fully extended.

19.10.10.2* The procedure specified in 19.10.10.1 shall be completed smoothly and without undue vibration within the time permitted by the edition of NFPA 1901 in effect at the time of manufacture.

19.10.10.3 After completing the procedure specified in 19.10.10.1, the water tower shall be retracted, the turntable rotation shall be completed through 360 degrees, and then the water tower shall be lowered to its bed, after which a thorough inspection shall be made of all moving parts.

19.10.10.4 The test shall demonstrate successful operation of all water tower controls.

19.10.11 Water System Inspection and Test.

19.10.11.1 The waterway system shall be inspected as follows:

(1) Inspect the system for proper operation of all components.
(2) Inspect the system for rust, corrosion, blockage, or other defects.

19.10.11.2 The waterway-attaching brackets shall be inspected as follows:

(1) Inspect the brackets for loose bolts, weld fractures, or other defects.
(2) (+) Inspect all attaching welds.

19.10.11.3 The water system shall be pressure tested.

19.10.11.3.1 If the water tower has a telescoping boom, the water system shall be tested following the procedures in 19.8.9.4.1 and 19.8.9.4.2.

19.10.11.3.2 If the water tower has an articulating boom, the water system shall be tested following the procedure in 19.9.14.3.2.

19.10.11.3.3 If the water tower has both a telescoping boom and an articulating boom, it shall be tested in accordance with 19.10.11.3.1 and 19.10.11.3.2.

Copyright National Fire Protection Association
Provided by IHS under license with NFPA
No reproduction or networking permitted without license from IHS
Not for Resale

19.10.11.3.4* The water system shall operate properly and with an absence of leaks during the pressure test.

19.10.11.4 Flowmeters.

19.10.11.4.1 If the waterway system is equipped with a flowmeter(s), the flowmeter(s) shall be tested at the water system manufacturer's maximum rated water system flow.

19.10.11.4.2 Any meter that reads off by more than 10 percent shall be recalibrated, repaired, or replaced.

19.10.11.5 Water Pressure Gauges.

19.10.11.5.1 If the waterway system is equipped with a water pressure gauge(s), each water pressure gauge(s) shall be checked for accuracy at a minimum of three points at 50 psi (345 kPa) intervals without exceeding the maximum rated working pressure of the waterway system.

19.10.11.5.2 Any gauge that reads off by more than 10 psi (70 kPa) shall be recalibrated, repaired, or replaced.

19.10.11.6 Relief Valve.

19.10.11.6.1 If the waterway system is equipped with a relief valve, the relief valve shall be checked to verify that it is operational at the waterway manufacturer's recommended pressure setting.

19.10.11.6.2 Any relief valve that fails to operate within 10 psi (70 kPa) of the manufacturer's required setting shall be repaired, recalibrated, or replaced.

19.10.12 Signs. All signs shall be inspected to verify that they are in place and legible.

19.10.13* Hydraulic Fluid. After the operating tests have been performed, a sample of the hydraulic fluid shall be removed from the hydraulic reservoir and subjected to spectrochemical analysis, particle count, viscosity check, and water content analysis.

19.10.14* Records. A comprehensive record shall be completed for all inspections and tests of the water tower and signed by the person responsible for the test.

19.10.14.1 When the torque verification of mounting bolts is performed as required by this standard, the bolt size, grade, and torque specifications shall be recorded.

19.10.14.2 When an NDT is conducted, the test record shall indicate the NDT method used in each inspected area.

19.10.14.3 Where this standard requires measurements to be taken — such as bearing clearance and backlash, cylinder drift, relief pressure, ladder section twist, hardness readings, base rail thickness, extension brake drift, and winch drift — these measurements shall be recorded in the test record so that a year-to-year comparison can be made.

Chapter 20 Performance Testing of Foam Proportioning Systems

20.1 General. If the apparatus is equipped with a foam proportioning system, a test shall be performed to determine if the foam proportioning system is capable of delivering foam solution at a concentrate setting established for the agent(s) used.

20.1.1 At a minimum, the foam proportioning system shall be tested annually.

20.1.2 Prior to the foam proportioner system test, all foam system components shall be inspected in accordance with Chapter 11.

20.2 Performance Level. The foam proportioner system shall be operated at the proportioning ratio specified by the AHJ and at the water flow and pressure for the agent(s) employed.

20.2.1 The system output shall be measured to determine calibration accuracy.

20.2.2 The system shall be operated at the same proportioning ratio, water flow, and pressure each time the system is tested.

20.3* Testing Methods. One of the following four methods for testing a foam proportioning system for calibration accuracy shall be used:

(1) Substituting water for foam concentrate
(2) Measuring foam concentrate pump output directly
(3) Determining foam percentage by use of a refractometer
(4) Determining foam percentage by use of a conductivity meter

20.4 Multiple Concentrate Systems. If the apparatus is equipped with multiple foam concentrates, the system shall be tested with each concentrate being carried.

20.5 Accuracy Level. Foam proportioner system accuracy shall meet the minimum requirements in effect at the time the proportioner system was installed.

Chapter 21 Performance Testing of Compressed Air Foam Systems (CAFS)

21.1 General. If the apparatus is equipped with a compressed air foam system (CAFS), a test shall be performed to determine if the compressed air system is capable of delivering the manufacturer's maximum recommended airflow at rated pressures.

21.2 Frequency. At a minimum, the compressed air system for CAFS shall be tested annually.

21.3 Inspection. Prior to testing the compressed air system for CAFS, all system components shall be inspected in accordance with Chapter 12.

21.4 Test Method.

21.4.1 All tests shall be conducted using either a calibrated airflow meter in conjunction with a standard cubic feet per minute (SCFM) flow chart, or a fixed orifice flowmeter in conjunction with various size of orifices to test the flow volume in SCFM *(see Table 21.4.1 for volume in SCFM for different orifice sizes and psi loss).*

21.4.2 Test procedures shall be as follows:

(1) Run the compressed air system at the CAFS manufacturer's recommended maximum airflow at 125 psi (862 kPa) for 20 minutes.
(2) Record the airflow, air pressure, and compressor temperature at start up and in 5 minute increments.
(3) Record the maximum air pressure developed by the compressed air system.
(4) Connect one 100 ft (30 m), 1½ in. (38 mm) or smaller hoseline to a CAFS discharge and stretch it out on level ground.

Copyright National Fire Protection Association
Provided by IHS under license with NFPA
No reproduction or networking permitted without license from IHS
Not for Resale

Table 21.4.1 Volume of Air in Standard Cubic Feet per Minute (SCFM)

Pressure Loss Across Orifice (psi)	Orifice Diameter (in.)										
	1/64	1/32	1/16	1/8	1/4	3/8	1/2	5/8	3/4	7/8	1
5	0.062	0.249	0.993	3.97	15.9	35.7	63.5	99.3	143	195	254
7	0.073	0.293	1.17	4.68	18.7	42.2	75.0	117	168	260	300
9	0.083	0.331	1.32	5.30	21.2	47.7	84.7	132	191	260	339
12	0.095	0.379	1.52	6.07	24.3	54.6	97.0	152	218	297	388
15	0.105	0.420	1.68	6.72	26.9	60.5	108	168	242	329	430
20	0.123	0.491	1.96	7.86	31.4	70.7	126	196	283	385	503
25	0.140	0.562	2.25	8.98	35.9	80.9	144	225	323	440	575
30	0.158	0.633	2.53	10.1	40.5	91.1	162	253	365	496	648
35	0.176	0.703	2.81	11.3	45.0	101	180	281	405	551	720
40	0.194	0.774	3.10	12.4	49.6	112	198	310	446	607	793
45	0.211	0.845	3.38	13.5	54.1	122	216	338	487	662	865
50	0.229	0.916	3.66	14.7	58.6	132	235	366	528	718	938
60	0.264	1.06	4.23	16.9	67.6	152	271	423	609	828	1082
70	0.300	1.20	4.79	19.2	76.7	173	307	479	690	939	1227
80	0.335	1.34	5.36	21.4	85.7	193	343	536	771	1050	1371
90	0.370	1.48	5.92	23.7	94.8	213	379	592	853	1161	1516
100	0.406	1.62	6.49	26.0	104	234	415	649	934	1272	1661
110	0.441	1.76	7.05	28.2	113	254	452	705	1016	1383	1806
120	0.476	1.91	7.62	30.5	122	274	488	762	1097	1494	1951
130	0.494	1.98	7.90	31.6	126	284	503	790	1138	1549	2023

Notes:
(1) SCFM = 0.028 standard cubic meters per minute (SCMM); 1 psi = 6.895 kPa; 1 in. = 25.40 mm.
(2) Values calculated based on dry air at atmospheric pressure of 14.7 psi (101.4 kPa), 70°F (21°C).

(5) Secure the nozzle end of the hoseline to a stationary object with rope, with straps, or in some other manner such that when the nozzle is opened as specified in 21.4.2(10) the operator is protected from nozzle movement.
(6) Engage the water pump and establish a 125 psi (862 kPa) pump pressure, but do not charge the hoseline with water.
(7) Maintain the water temperature in the pump by circulating pump water through the water tank.
(8) Ensure that air pressure and water pressure are within ±10 percent.
(9) Fill the hoseline with compressed air.
(10) Slowly (no faster than in 3 seconds, and no slower than in 10 seconds) open the nozzle until it is no more than one-quarter open.
(11) Check to ensure that the air pressure and water pressure are within ±10 percent of the original set point.
(12) Close the nozzle.
(13) Continue to operate the air and water system for 5 minutes.
(14) Check to see that the water pressure and air pressure remain within ±10 percent of the original set point.

21.4.3 If the CAFS does not maintain the water pressure and air pressure within ±10 percent of the original set point, or if the air compressor temperature exceeds the manufacturer's limit during the test, the test shall be stopped and the test shall be considered a failure.

Chapter 22 Performance Testing of Line Voltage Electrical Systems

22.1 General. If the fire apparatus is equipped with a line voltage electrical system, the system and components shall be tested as required by this chapter.

22.2* Frequency. Performance tests shall be conducted at least annually, unless otherwise noted, and whenever major repairs or modifications to the line voltage electrical system or any component of the system have been made.

22.3 Power Source Testing.

22.3.1 The line voltage power source shall be tested annually except when the full load test in Section 22.7 is performed.

22.3.2 The power source shall be tested using the electrical loads normally carried on the apparatus connected simultaneously, up to the limit specified in 22.3.3.

22.3.3 The total electrical load applied shall not exceed the continuous rating as specified on the power source specification label, or the power source nameplate rating if there is no power source specification label.

22.3.4 The power source shall be run for a minimum of 10 minutes under the test load specified in 22.3.2.

Copyright National Fire Protection Association
Provided by IHS under license with NFPA
No reproduction or networking permitted without license from IHS
Not for Resale

22.3.5 The voltage, frequency, and load shall be measured and recorded at the following times:

(1) At the beginning of the test under no load conditions
(2) After the test load has been applied
(3) After 10 minutes under test load
(4) At the end of the test when the test load has been removed

22.3.6 The voltage and frequency shall be within the limits specified by NFPA 1901 at the time the apparatus was built.

22.4 Receptacle Wiring.

22.4.1* The polarity of the wiring, the ground continuity, and the neutral bonding or isolation of all 120-volt outlets shall be tested, including receptacles on the body, cord reels, and aerial device.

22.4.1.1* If the neutral conductor is bonded to the vehicle frame, the testing shall be done with a tester that verifies that the hot and neutral wires are connected to the correct receptacle pins and that the ground is connected.

22.4.1.2* If the neutral is not bonded to the vehicle frame, the testing shall be done with the power off using a continuity tester or ohmmeter to verify that both of the current carrying conductors are isolated from the vehicle body and frame, and that the protective ground is connected to the vehicle body and frame.

22.4.2* Any receptacle that can be powered both from an onboard power source and from a shore line shall be tested both ways.

22.4.3 Duplex receptacles shall be tested in each receptacle.

22.5* GFCI Testing. If the wiring system or any appliances on the apparatus incorporate ground fault circuit interrupters (GFCIs), they shall be operationally checked in accordance with this section.

22.5.1 All GFCIs shall be checked, whether they are integrated into receptacles or circuit breakers or they are separate devices.

22.5.2 The operational check shall verify the following:

(1) That the integrated test button trips the GFCI
(2) That the reset button restores the GFCI
(3) That the GFCI trips when a ground fault is simulated with an external tester

22.6 Line Voltage Equipment Testing.

22.6.1* All line voltage equipment on the apparatus shall be run for a minimum of 10 minutes.

22.6.2 The testing shall include, but not be limited to, the following components:

(1) Light towers
(2) Permanently wired lights
(3) Electric motors
(4) Fixed wired appliances
(5) Receptacles (each individual receptacle if in multiples), fixed cords, and cord reels each loaded to at least 50 percent of the rating of the circuit breaker for that circuit

22.6.3* All equipment shall operate properly without arcing, failure, or excessive heating.

22.7 Full Load Test of Power Source.

22.7.1 The full load test of the power source shall be performed at least every 5 years.

22.7.2* The test load shall be at least 95 percent of the power source specification label rating, if present, or otherwise shall be at least 80 percent of the nameplate rating label.

22.7.3 If the apparatus is equipped with a fire pump, the fire pump shall be running at 150 psi (1000 kPa) net pump pressure and flowing rated capacity during the power source test.

22.7.4 Test Procedure.

22.7.4.1 The power source shall be started with no load, and the voltage and frequency shall be measured and recorded.

22.7.4.2 The power source shall be loaded to 50 percent ±10 percent of the load specified in 22.3.2, and the voltage and frequency shall be measured and recorded.

22.7.4.3 The power source shall be loaded to the load specified in 22.3.2, and the voltage and frequency shall be measured and recorded.

22.7.4.4 The power source shall be operated for 40 minutes, and the voltage and frequency shall be measured and recorded at the start of operation and every 10 minutes thereafter.

22.7.4.5 The power source shall be unloaded to 50 percent ±10 percent of the load specified in 22.3.2, and the voltage and frequency shall be measured and recorded.

22.7.4.6 The power source shall be completely unloaded, and the voltage and frequency shall be measured and recorded.

22.7.4.7 The voltage shall be within ±10 percent of the rated voltage at all points throughout the test.

22.7.4.8 The frequency shall be within ±3 Hz of the rated frequency at all points throughout the test.

22.8 Dielectric Voltage Withstand Test.

22.8.1 At least every 5 years, and after a vehicle accident or body repair, a dielectric test shall be performed on the line voltage electrical system.

22.8.2 The wiring and permanently connected devices and equipment shall be subjected to a dielectric voltage withstand test of 900 volts for 1 minute.

22.8.3* The test shall be conducted as follows:

(1) If the system has a neutral conductor bonded to the vehicle chassis, isolate the power source from the panel board.
(2) Disconnect any solid state low voltage components.
(3) Connect one lead of the dielectric tester to all the hot and neutral busses tied together.
(4) Connect the other lead to the fire apparatus frame or body.
(5) Close any switches and circuit breakers in the circuit(s).
(6) Apply the dielectric voltage for 1 minute in accordance with the testing equipment manufacturer's instructions.

Chapter 23 Performance Testing of Breathing Air Compressor Systems

23.1 General.

23.1.1 If the apparatus is supplied with a breathing air compressor system, the compressor system shall be tested annually

Copyright National Fire Protection Association
Provided by IHS under license with NFPA
No reproduction or networking permitted without license from IHS
Not for Resale

by the manufacturer or the manufacturer's authorized representative to verify that the system still meets the manufacturer's requirements for the system when it was new.

23.1.2 If the manufacturer of the breathing air compressor system is no longer in business and therefore is not available to test the system, the system shall be tested using accepted industry practices by a service company that has experience with high-pressure breathing air systems.

23.2 Air Quality.

23.2.1 The quality of air produced by the breathing air compressor system shall be tested in accordance with NFPA 1989 following completion of the annual test.

23.2.2 If the annual test of the breathing air compressor system is conducted at the same time that the system is serviced as required by 14.1.1, a single test of the air quality shall be permitted following both the servicing and testing.

23.3 Records. Records shall be maintained of all annual testing of the breathing air compressor system.

Annex A Explanatory Material

Annex A is not a part of the requirements of this NFPA document but is included for informational purposes only. This annex contains explanatory material, numbered to correspond with the applicable text paragraphs.

A.1.5 Metric units of measurement in this standard are in accordance with the modernized metric system known as the International System of Units (SI). The liter, a unit that is outside of but recognized by SI, is commonly used in international fire protection. Table A.1.5(a), Table A.1.5(b), and Table A.1.5(c) provide conversion factors as an aid to the user. Table A.1.5(d) provides a list of the abbreviations used in this standard and their meaning.

Table A.1.5(a) Conversion Factors: U.S. Units to SI Units

U.S. Units		SI Units
1 gallon per minute (gpm)	=	3.785 liters per minute (L/min)
1 imperial gallon per minute (igpm)	=	4.546 liters per minute (L/min)
1 pound per square inch (psi)	=	6.895 kilopascals (kPa)
1 inch of mercury (in. Hg) at 60°F (15.6°C)	=	3.376 kilopascals (kPa)
1 inch (in.)	=	25.40 millimeters (mm)
1 foot (ft)	=	0.3048 meter (m)
1 cubic foot (ft^3)	=	0.02832 cubic meter (m^3)
1 square inch ($in.^2$)	=	645.2 square millimeters (mm^2)
1 mile per hour (mph)	=	1.609 kilometer per hour (km/hr)
1 pound (lb)	=	0.4536 kilogram (kg)

Table A.1.5(b) Conversion Factors: SI Units to U.S. Units

U.S. Units		S.I. Units
1 liter per minute (L/min)	=	0.2642 gallon per minute (gpm)
1 liter per minute (L/min)	=	0.2200 imperial gallon per minute (igpm)
1 kilopascal (kPa)	=	0.1450 pound per square inch (psi)
1 kilopascal (kPa)	=	0.2962 inch of mercury (in. Hg) at 60°F (15.6°C)
1 millimeter (mm)	=	0.03937 inch (in.)
1 meter (m)	=	3.281 feet (ft)
1 cubic meter (m^3)	=	35.31 cubic feet (ft^3)
1 kilometer per hour (km/hr)	=	0.6214 mile per hour (mph)
1 kilogram (kg)	=	2.205 pounds (lb)
1 lux (lx)	=	0.09290 footcandle (fc)

Table A.1.5(c) Useful Conversion Factors

1 gallon per minute (gpm)	=	0.833 imperial gallon per minute (igpm)
1 imperial gallon per minute (igpm)	=	1.2 gallons per minute (gpm)
1 foot (ft) of water	=	0.433 pound per square inch (psi)
1 pound per square inch (psi)	=	2.31 feet (ft) of water
1 metric ton (mton)	=	1000 kilograms (kg)
1 kilopascal (kPa)	=	0.01 bar
1 bar	=	100 kilopascals (kPa)

Table A.1.5(d) Abbreviations Used in This Standard

Abbreviation	Term
ac	alternating current
AHJ	authority having jurisdiction
C	centigrade
CAFS	compressed air foam system
CCA	cold cranking amperage
dc	direct current
F	Fahrenheit
ft	feet
gpm	gallons per minute
in.	inch
in. Hg	inches of mercury
kg	kilogram
km/hr	kilometers per hour
kPa	kilopascal
L	liter
L/min	liters per minute
lb	pound
m	meter
mm	millimeter
mph	miles per hour
psi	pounds per square inch
V	volts

Copyright National Fire Protection Association
Provided by IHS under license with NFPA
No reproduction or networking permitted without license from IHS
Not for Resale

A.3.2.1 Approved. The National Fire Protection Association does not approve, inspect, or certify any installations, procedures, equipment, or materials; nor does it approve or evaluate testing laboratories. In determining the acceptability of installations, procedures, equipment, or materials, the authority having jurisdiction may base acceptance on compliance with NFPA or other appropriate standards. In the absence of such standards, said authority may require evidence of proper installation, procedure, or use. The authority having jurisdiction may also refer to the listings or labeling practices of an organization that is concerned with product evaluations and is thus in a position to determine compliance with appropriate standards for the current production of listed items.

A.3.2.2 Authority Having Jurisdiction (AHJ). The phrase "authority having jurisdiction," or its acronym AHJ, is used in NFPA documents in a broad manner, since jurisdictions and approval agencies vary, as do their responsibilities. Where public safety is primary, the authority having jurisdiction may be a federal, state, local, or other regional department or individual such as a fire chief; fire marshal; chief of a fire prevention bureau, labor department, or health department; building official; electrical inspector; or others having statutory authority. For insurance purposes, an insurance inspection department, rating bureau, or other insurance company representative may be the authority having jurisdiction. In many circumstances, the property owner or his or her designated agent assumes the role of the authority having jurisdiction; at government installations, the commanding officer or departmental official may be the authority having jurisdiction.

A.3.3.14 Auxiliary Pump. An auxiliary pump can be a pump that is secondary to a fire pump to achieve pump and roll capability or to provide high-pressure hose reel operations. It could also be the only pump on a special service or wildland fire apparatus for which the desired performance is different than that of a fire pump, an industrial supply pump, or a transfer pump.

A.3.3.28 Compound Gauge. On most gauges, zero equals atmospheric pressure. Gauges typically measure pressure above atmospheric pressure in pounds per square inch (psi) [kilopascals (kPa)] and below atmospheric pressure in inches of mercury (in. Hg) [kilopascals (kPa)].

A.3.3.40 Electronic Battery Conductance Tester. A conductivity tester displays a battery's cold cranking amps (CCA) value based on the amount of battery plate surface area available upon which electrochemical activity can occur.

A.3.3.64 Instability. The lifting of a tire or stabilizer on the opposite side of the vehicle from the load does not necessarily indicate a condition of instability. Instability occurs when an aerial device can no longer support a given load and overturning is imminent.

A.3.3.82 Net Pump Pressure. When operating from a hydrant, the net pump pressure typically is less than the discharge pressure. For example, if the discharge pressure gauge reads 150 psi (1034 kPa) and the intake (suction) gauge reads 20 psi (138 kPa), the net pump pressure equals 130 psi (896 kPa). When operating from draft, the net pump pressure will be above the discharge pressure. For example, if the discharge pressure gauge reads 145 psi (1000 kPa) and the intake (suction) gauge reads 10 in. Hg (34 kPa) vacuum, the net pump pressure will be 150 psi (1034 kPa) (1 in. Hg = 0.5 psi = 3.4 kPa).

A.3.3.88 Optical Source. An optical source can consist of a single optical element or a fixed array of any number of optical elements where their geometric positioning relative to each other is fixed by the manufacturer of the optical source and cannot be easily modified. [**1901,** 2003]

A.3.3.103 Rated Vertical Height. For an aerial ladder, rated vertical height is measured from the outermost rung of the outermost fly section, with the ladder at maximum elevation and extension. For an elevating platform, rated vertical height is measured from the top of the platform handrails with the platform raised to its position of maximum elevation and extension, and for a water tower, rated vertical height is measured from the discharge end of the nozzle with the boom raised to its position of maximum elevation and extension.

A.3.3.132 Vacuum. Typically, vacuum is expressed in inches of mercury (in. Hg) [kilopascals (kPa)].

A.4.1 The intent is to include reserve fire apparatus that is fully equipped as well as reserve fire apparatus that might need to be equipped with hose, tools, and equipment before being ready to respond.

A.4.3.1.1 Additional qualifications can be identified by schooling, training, experience, and recognized certification programs, such as those administered by Automotive Service Excellence (ASE), Emergency Vehicle Technician Certification Commission, Inc., or other equivalent certifying agencies.

A.4.3.1.2 Persons performing daily/weekly inspection and the operational checks of fire apparatus should meet the qualifications of NFPA 1002, *Standard for Fire Apparatus Driver/Operator Professional Qualifications*, for the type of fire apparatus being checked.

A.4.4.1 Fire apparatus are complex machines that involve all kinds of mechanical, electrical, and chemical hazards. Failure to consult the appropriate manuals might result in serious injury to the person performing the inspection or maintenance or to other persons in the area.

A.4.4.3 One area in which there are regulations in the United States is the area of tire and wheel service, which is covered under the Occupational Safety and Health Administration (OSHA) regulations specified in 29 CFR 1910.177, "Servicing multi-piece and single piece rim wheels."

A.4.5.2 If the fire apparatus manufacturer is no longer in business, or the servicing and maintenance criteria or recommendations are no longer available from the manufacturer, the fire department should establish the criteria that are necessary to inspect and maintain the specific piece of fire apparatus. These criteria can be established by discussing inspection and maintenance procedures for similar types or styles of fire apparatus or components with persons experienced with such maintenance and by reviewing the industry standards that were in effect at the time the fire apparatus or component was built. The criteria should be developed in writing.

The *Vehicle Inspection Handbook, Passenger Vehicles & Light Trucks*, and the *Vehicle Inspection Handbook, Trucks, Buses, & Trailers*, prepared by the American Association of Motor Vehicle Administrators, provide a valuable resource in developing an inspection program.

A.4.5.3 The frequency of use (for example, hours, miles, and time) of apparatus (duty cycle) might require that diagnostic checking, inspection, and maintenance be completed on a monthly, quarterly, or semiannual basis.

Copyright National Fire Protection Association
Provided by IHS under license with NFPA
No reproduction or networking permitted without license from IHS
Not for Resale

A.4.5.5 During an inspection, the technician should conduct a diagnostic check of the entire apparatus to detect abnormal vibrations that could indicate a component defect or possible failure.

A.4.7 The AHJ should identify the state and local regulations that pertain to record retention and follow them as a minimum.

A.5.1 Unsafe fire apparatus pose severe safety risks to fire fighters and the general public. These risks result in death, severe injury, and property loss. These risks are particularly prevalent in older apparatus. See Annex D for safety criteria on older apparatus.

A.6.1.6 When a component on the fire apparatus is taken out of service, a determination needs to be made as to whether the apparatus is suitable for continued use. If any component that affects the operation of the chassis, the other components used during response, or the operational safety of the apparatus is taken out of service, the entire apparatus should be taken out of service.

A.6.2.3 Deficiencies or problems might or might not make the apparatus unsafe but will render it unusable for some operations. The AHJ should provide a list of limitations to be imposed or a list of enforced conditions under which the apparatus *cannot* continue to be used, pending repair of the deficiency. That list should include, but is not limited to, the following:

(1) Compartment doors will not stay closed.
(2) Running boards are not secure.
(3) Tailboard is not secure.
(4) Accessory step (folding step) is broken or missing.

Although this standard identifies that cracked or broken windshields and mirrors should be consideration for taking the apparatus out of service, consideration should also be given to state or local regulations. The AHJ should identify and follow the pertinent state and local regulations.

A.6.3.1(4) Tread depth should be checked with a tread depth gauge. When inserted into the tire tread, the amount of tread left is indicated in 1/32 in. (0.8 mm).

A.6.4.1 Loss of power can be the result of numerous items related to the engine, fuel system, and air intake system. Loss of power can be associated with loud or unusual noises. Loud or unusual noises can be the result of worn, damaged, or defective internal engine components, such as main and connecting rod bearings, connecting rods, piston pins, pistons, valve trains, and fuel systems. Loss of power can be the result of something as simple as clogged fuel or air filters. Inspection of the air intake restriction gauge will allow determination of the condition of the air intake system.

Many vehicles, especially those with water-fuel separators, have both audible and visual indicators to show failure of fuel system filters or the presence of excessive water. Another indicator of factors resulting in loss of power is engine exhaust smoke. As a rule, white smoke indicates a cooling system leak into the combustion area; blue smoke indicates excessive oil consumption, normally engine oil but in some applications transmission fluid; and black smoke indicates excessive unburned fuel. In any case, any one of the aforementioned items can deter from proper and safe operation of the vehicle and should therefore be remedied as soon as possible.

See also A.7.4.5 and A.7.6.

A.6.7.1(4) Burned-out lamps and other deficiencies should be corrected immediately. While all systems have a degree of redundancy, they are not designed to operate with multiple deficiencies. When more than one optical source in the warning light system is inoperative and the apparatus must be used, it should be driven as a nonemergency vehicle.

A.6.7.3(1) When the audible warning system is inoperative and the apparatus must be used, it should be driven as a nonemergency vehicle.

A.6.8.1.1 Paragraph 6.8.1.1(1) refers to the leak-down rate of the supply side of the air system. Paragraph 6.8.1.1(2) refers to the leak-down rate of the applied side of the air system. Paragraph 6.8.1.1(8) refers to the air compressor's ability to supply ample air for correct and safe operation of the vehicle.

Although this standard identifies out-of-service criteria for air brake systems, consideration should also be given to state or local regulations. The authority having jurisdiction should identify and follow the pertinent state and local regulations to ensure the vehicle is safe to operate.

Lining thickness of less than 3/16 in. (4.8 mm) for a brake shoe with a continuous strip of lining, 1/4 in. (6.4 mm) to the wear indicator for a shoe with two pads for drum brakes, or less than 1/8 in. (3.2 mm) of lining for disc pads should be considered worn out, and the lining should be replaced.

A.6.8.2.1 Although this standard identifies out-of-service criteria for hydraulic brake systems, consideration should also be given to state or local regulations. The AHJ should identify and follow the pertinent state and local regulations to ensure the vehicle is safe to operate.

Lining thickness of less than 1/16 in. (1.6 mm) for a brake shoe or disk should be considered worn out and should be replaced.

A.6.9.1(6) Beginning with the 1991 edition of NFPA 1901, fire apparatus equipped with electronic or electric engine throttle controls are required to include an interlock system to prevent engine speed advancement, unless the chassis transmission is in neutral with the parking brake engaged; or unless the parking brake is engaged, the fire pump is engaged, and the chassis transmission is in pumping gear; or unless the apparatus is in the "okay to pump" mode.

A.7.3.3 It is important that the cold tire inflation be maintained to the fire apparatus manufacturer's recommended tire pressure, which is based on the weight of the completed apparatus, and not to the maximum pressure shown on the sidewall of the tire. If the information from the fire apparatus manufacturer is not available for the tires on the vehicle, each axle should be weighed with the vehicle fully loaded and the tires inflated to the tire manufacturer's inflation specification for the tire model, size, and axle load.

A.7.3.4 Tire age can be determined by checking the DOT code on the sidewall of each tire. The code begins with "DOT" and ends with a 3 digit (through 1999) or 4 digit (2000 and beyond) date code. The first 2 digits of the date code are a week of the year the tire was manufactured and the last 1 or 2 digits are the year indicator. For example, "DOT GJ HU234 319" was manufactured in week 31 of 1999. "DOT BT FR87 2501" was manufactured in week 25 of 2001. The code may be on the inside or outside sidewall.

A.7.3.5 Wheel-attaching hardware should be torqued to the manufacturer's recommendation at the time of wheel installation. The wheel- or rim-attaching hardware should be retorqued at 50 mi to 100 mi (80 km to 160 km) after installation

Copyright National Fire Protection Association
Provided by IHS under license with NFPA
No reproduction or networking permitted without license from IHS
Not for Resale

and periodically thereafter. Wheel covers or nut covers might have to be removed for proper inspection.

A.7.4.5 To ensure efficient engine performance and extended valve and injector service life, a scheduled valve lash and injector height measurement and adjustment schedule should be maintained. Certain engines might also require nozzle and pump calibration, timing, replacement of spark plugs, ignition system tests, or other adjustments.

It is imperative that all engine components and accessories that can affect engine performance be inspected, adjusted, and maintained. Visual inspections along with air restriction tests performed on a regularly scheduled basis will ensure proper operation of components. Examples of engine performance concerns are abnormal black, blue, or white exhaust smoke and abnormal engine noises.

Other pertinent tests might be required for the engine to perform at maximum efficiency on an emergency scene. All recommended tests and adjustments should be performed to ensure proper operation.

Failure to perform factory-recommended engine adjustments or inspections that are required initially and at regular intervals thereafter, or failure to make necessary adjustments or part replacements (for example, spark plugs on gas engines), might result in gradual degradation of engine performance and reduced fuel combustion efficiency.

Increasing the engine performance through any means, such as reprogramming, might cause the engine to produce more power, torque, or both than other components on the chassis are rated to handle. This situation can have serious safety implications.

A.7.6 Fuel systems are essential components of the engine. To ensure that the engine is capable of proper performance and operation, the fuel system should be inspected and tested to the manufacturer's specifications. Quality fuel must be utilized. The fuel filters (primary and secondary, if equipped) should be replaced or serviced on a regular basis, normally at 6 month intervals or at every oil change is recommended. Fuel pressure should be tested utilizing factory-recommended procedures. Fuel spill-back (return) should also be included in fuel system checks. Some manufacturers recommend that a fuel suction test be performed to test the suction capabilities of the fuel pump and suction side of the fuel system.

A.7.6.5 All linkage should be inspected for freedom of movement, adjustment, full throttle position, idle position, and smooth operation.

A.7.12.1 Severe duty (conditions) scheduling applies to brake system maintenance due to the normal hard braking encountered with fire apparatus.

A brake maintenance schedule for each fire apparatus should be set after the brakes have been inspected several times. This schedule should include both minor inspections and major inspections as follows:

(1) For minor inspections, the brakes, brake linings or pads, and slack adjusters should be inspected for freedom of movement, security of mounting, and deformation and should be tested for proper operation.
(2) The slack adjuster should be lubricated according to a schedule that provides the most frequent inspection and lubrication based on one of the following:
    (a) Schedule for chassis lubrication used by the fire department
    (b) Schedule for chassis lubrication recommended by the manufacturer of the chassis
    (c) At least four times during the life of the linings
(3) Major inspections should be performed whenever the brakes are relined, or at least once a year, whichever comes first, and should include the following:
    (a) All procedures, inspections, and measurements recommended by the manufacturer for relining the brakes
    (b) Lubrication of the slack adjuster and caliper, if equipped
    (c) Adjustment of the brakes as described in the manufacturer's literature

A.7.14.6 For the safety of personnel riding in the driving or crew area, the equipment specified in 7.14.6 should be mounted in accordance with the requirements of NFPA 1901.

A.7.14.7.1 If the cab has a powered tilting system that does not have an interlock system, consideration should be given to providing an interlock to allow operation only when the parking brake is engaged.

A.7.15.4 If the apparatus does not have the reflective striping, consideration should be given to adding the striping in accordance with applicable sections of the current edition of NFPA 1901.

A.7.15.5 If the apparatus does not have the warning labels, consideration should be given to adding the warning labels in accordance with applicable sections of the current edition of NFPA 1901.

A.8.5.2 Alternators are required to be performance tested at least annually and after certain repairs *(see Section 17.5)*. The purpose of the diagnostic check specified in Chapter 8 is not to duplicate the tests required in the annual performance test but to ensure the component is working properly. If the alternator is working, the voltage should increase after starting the engine, and the ammeter (if equipped) should read positive.

A.8.7.2 Starting with the 1996 edition of NFPA 1901, the low voltage alarm is required to sound if the system voltage at the battery or at the master load disconnect switch drops below 11.8 volts for a 12-volt nominal system or 23.6 volts for a 24-volt nominal system for more than 120 seconds (2 minutes). This alarm can be tested easily by loading the electrical system, at idle, and waiting for the alarm to sound. In many cases, once the alarm has sounded, the fire apparatus's engine will proceed to fast idle to recuperate the voltage loss. To test the load management system load-shedding function, it might be necessary to disable the fast idle by placing the pump in gear or placing the transmission in gear (it is important to hold the apparatus by depressing the brake pedal).

A.9.2.1 Fire pumps and industrial supply pumps are required to be performance tested at least annually and after certain repairs *(see Chapter 18)*. The purpose of the diagnostic check specified in Chapter 9 is not to duplicate the tests required in the annual performance test but to ensure that the component is working properly.

A.9.2.4.1 Components of the pump drive system could include, but are not limited to, the following:

(1) Split-shaft power takeoff (PTO)
(2) Pump transmission
(3) Pump transfer case
(4) PTO

Copyright National Fire Protection Association
Provided by IHS under license with NFPA
No reproduction or networking permitted without license from IHS
Not for Resale

(5) Pump clutch
(6) Pump drive shafts
(7) Hydraulic drive systems
(8) Auxiliary drive engine

A.9.2.4.2 Pump shift controls can include electrical, pneumatic, or mechanical components working individually or in combination to shift the pump drive system into and out of pump mode. Some pumps have manual backup shift controls. Pump shift indicators in-cab and on the operator's panel on split-shaft PTO pump drive systems typically require an electromechanical device, such as a switch mounted on the pump transmission, to sense pump shift status. The controls need to be inspected, diagnostically checked, and lubricated as part of a preventive maintenance program.

Beginning with the 1991 edition of NFPA 1901, fire apparatus equipped with electronic or electric engine throttle controls are required to include an interlock system to prevent engine speed advancement, unless the chassis transmission is in neutral with the parking brake engaged; or unless the parking brake is engaged, the fire pump is engaged, and the chassis transmission is in pumping gear; or unless the apparatus is in the "okay to pump" mode.

A.11.1 It is important for the operator, maintenance personnel, and fire apparatus technician to understand the types and properties of mechanical foam and its application to maintain a foam proportioner system. Specific information regarding foam concentrates, their corrosive characteristics, their biodegradability, and their application is available in NFPA 11, *Standard for Low-, Medium-, and High-Expansion Foam*. Information on foam concentrates for Class A fires is available in NFPA 1150, *Standard on Foam Chemicals for Fires in Class A Fuels*. A thorough knowledge of foam and foam systems will enhance the ability to maintain systems in peak operating conditions at all times.

There are many designs for foam proportioning systems. These systems include, but are not limited to, the following:

(1) Eductor systems
(2) Self-educting master stream nozzles
(3) Intake-side foam proportioning systems
(4) Around-the-pump foam proportioning systems
(5) Balanced pressure foam proportioning systems
(6) Direct injection foam proportioning systems

Annex A of NFPA 1901 describes these systems and variations thereof. A review of that material will assist with the understanding of foam proportioning systems.

A.11.3 Most foam system manufacturers differentiate between the materials they recommend for foam proportioning system components that are designed to be flushed with water after operation and those components that are intended to be wetted continuously with foam concentrate (that is, some positive displacement pumps are designed to be completely full of foam concentrate).

A.12.3.3.1 Special attention should be paid to the cleanliness and security of engine covers, cooling fins, and fans on air-cooled engines, as they are critical to the proper operation of the engine.

A.13.7.1.1 It is important to check the cleanliness and security of engine covers, cooling fins, and fans on air-cooled engines, as these factors are critical to the proper operation of the engine.

A.14.8 There are refill stations currently on fire apparatus that were never designed to the current requirements of NFPA 1901 and whose design has never been certified by an independent third-party certification organization. These include open-top fragmentation tubes and closed systems that have never been tested to determine if they will contain all fragments of a failed cylinder so as to protect the operator. If a commercial refill station is on the fire apparatus, it might be possible to confirm with the manufacturer whether the design of the unit meets current standards. Older refill stations should be considered for replacement with refill stations that meet the current NFPA 1901 standard.

A.14.9.1.1 Special attention should be paid to the cleanliness and security of engine covers, cooling fins, and fans on air-cooled engines, as they are critical to the proper operation of the engine.

A.16.2.3 If the scales allow, the right side and the left side of the apparatus should also be weighed. The side-to-side tire load variation should be no more than 7 percent of the total tire load for a given tire's axle.

A.16.2.4(3) In some chassis designs, the personnel weight is centered over the front axle and the entire personnel weight can be entered in the front axle column. If not, the weight allocation for each seating position can be calculated as follows:

$$\text{front weight} = \frac{200 \text{ lb } (90 \text{ kg}) \times \left(\begin{matrix} \text{wheel base} - \text{distance aft} \\ \text{of front axle to seat} \end{matrix} \right)}{\text{wheel base}}$$

If the seat is forward of the front axle, the distance is negative or the value should be added to the wheel base in the numerator formula (wheel base + seat distance forward of front axle).

The weight on the rear axle attributed to each seating position equals 200 lb (90 kg) minus the weight attributed to that seating position on the front axle.

$$\text{rear weight} = 200 \text{ lb } (90 \text{ kg}) - \text{front weight}$$

If the seat is not between the front and rear axle, one of the weights will be negative.

Figure A.16.2.4(3) is an example that shows four potential seating areas along the length of an apparatus with a 240 in. wheelbase. Each seating area could have more than one seating position (e.g., the driver's seat and officer's seat at the front of the apparatus).

Table A.16.2.4(3) shows the net effect of a seating position on the axle loadings at each of the four seating locations along the apparatus as shown in Figure A.16.2.4(3).

A.16.2.4(4) The reference to "additional equipment" is intended to account for equipment added to an apparatus for specific calls. This equipment could include, but is not limited to, ice rescue sleds, water rescue crafts, wildland fire fighter supplies, hose bridges, and portable water tanks added to apparatus for particular responses. The purpose of such additions is to honestly assess the fully loaded weight of an apparatus responding to any emergency or any service offered by the department. For this reason, where the equipment added to the apparatus is as important as standard equipment, the added equipment's weight should be recorded on line D of Figure 16.2.4 to represent where the additional weight impacts the apparatus.

Copyright National Fire Protection Association
Provided by IHS under license with NFPA
No reproduction or networking permitted without license from IHS
Not for Resale

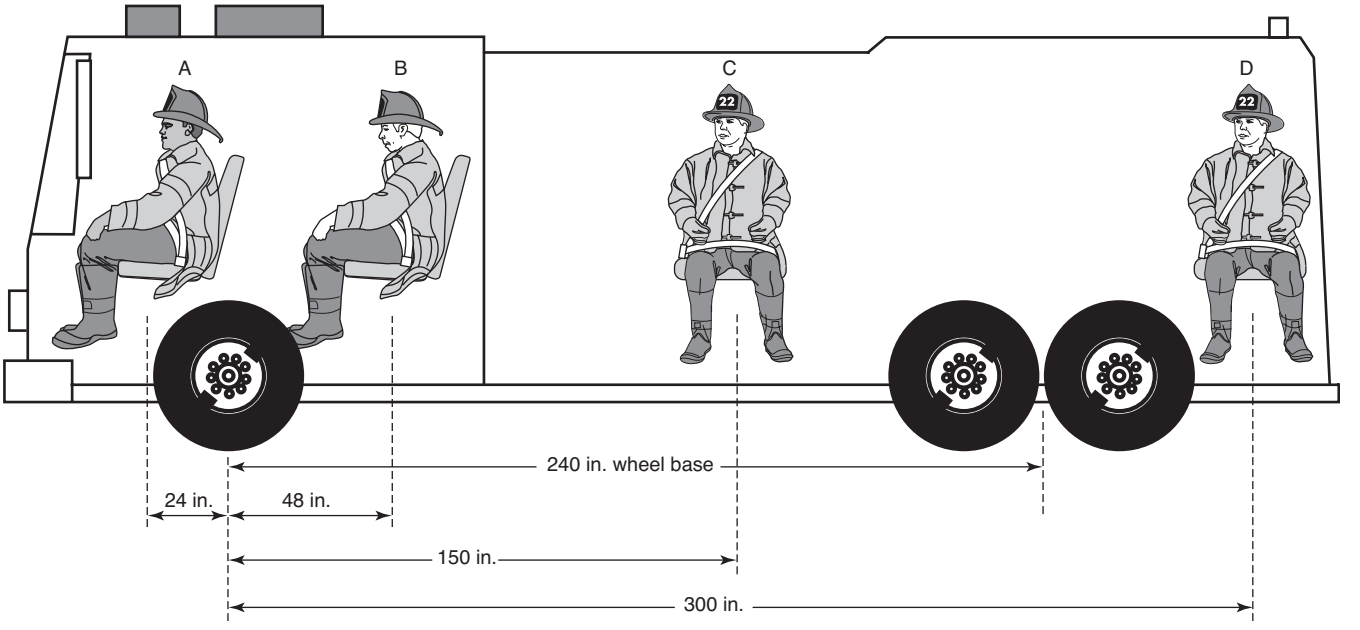

FIGURE A.16.2.4(3) Diagram of a Fire Apparatus Showing Potential Seating Locations.

Table A.16.2.4(3) Effect of Seat Location on Axle Loading

Seating Location on Figure	Distance from Front Axle (in.)	Wheelbase (in.)	Weight on Front Axle (lbs)	Weight on Rear Axle (lbs)	Total Value (lbs)
A	–24	240	220*	–20*	200
B	48	240	160*	40*	200
C	150	240	75*	125*	200
D	300	240	–50*	250*	200

*Final weight entered on Figure 16.2.4 needs to reflect this weight times the number of seating positions at this location.

If the apparatus is to be used for extended operations away from the community where it is normally housed, such that the fire fighters will be taking personal clothing and equipment with them, an additional allowance of 70 lb (32 kg) per seating position should be included.

A.16.3.3 Figure A.16.3.3 shows the layout of the brake test area.

A.16.4.1 The parking brake should be tested to the chassis manufacturer's recommendations. NFPA 1901 has required a parking brake system to hold a fully loaded apparatus on at least a 20 percent grade since 1991. If the fire apparatus parking brake system was not designed to perform up to these or applicable federal standards, or if the AHJ operates the apparatus beyond these standards, the AHJ should develop a standard operating guideline to supplement the apparatus parking brake system.

A.16.4.2 If grades of over 20 percent are present in the normal response area of the apparatus, the apparatus parking brake system should be tested on the steeper grade. If the vehicle fails to hold, the AHJ should develop a standard operating guideline to supplement the apparatus parking brake system.

A.17.2 "Major repairs" does not necessarily refer to the length of time that a repair takes but rather whether or not a repair potentially affects the operation or safety of any aspect of the low voltage electrical system. This might include repairs unrelated to the low voltage electrical system, such as body repairs, that might disturb wiring or other parts of the system. Testing should be performed to verify that, after the repair, the system is operating properly and safely.

A.17.3.2.1 Conductivity testing is preferred to load testing because it does not stress the battery, it is a more accurate indication of the state of health of the battery, and it provides values that can be recorded and tracked for trend analysis.

A.17.4 This test verifies that the wiring to the starter is in good condition and the connections are tight and free of internal corrosion.

A.17.5 This test verifies the output of the alternator and the alternator wiring.

A.17.5.5 If any portion of this test fails, it might indicate a problem with the alternator, or the problem might be with some other component of the electrical system. If the test fails, a qualified technician should do further investigation to determine the exact problem.

Copyright National Fire Protection Association
Provided by IHS under license with NFPA
No reproduction or networking permitted without license from IHS
Not for Resale

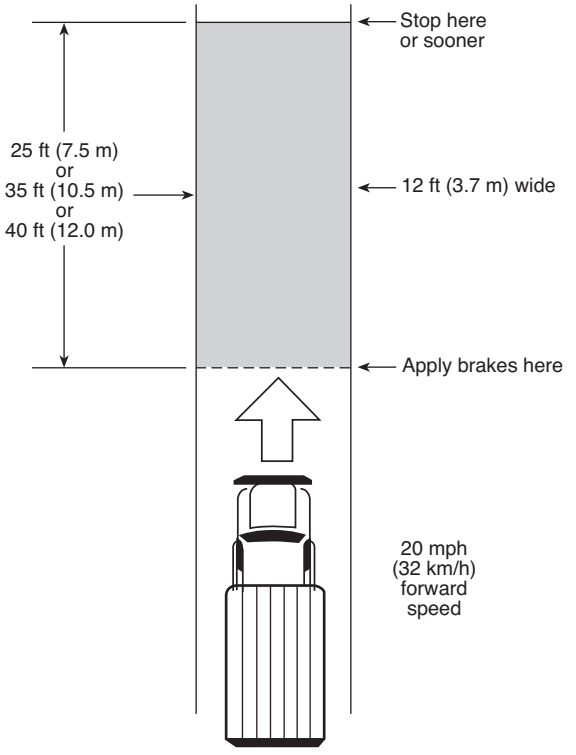

FIGURE A.16.3.3 Layout of a Brake Test Area.

A.17.5.5(7) If the system includes a battery isolator, the voltage drop is the sum of the drop between the alternator and the battery isolator and the drop between the battery isolator and the battery.

A.17.6.6 If any portion of this test fails, it might indicate a problem with the regulator, or the problem might be with some other component of the electrical system. If the test fails, a qualified technician should do further investigation to determine the exact problem.

A.17.8 This test is designed to verify that the charging system, with the load management system, if supplied, is sufficient to supply the total connected load.

A.17.8.3(2) The total continuous electrical load includes all continuous electrical equipment on the apparatus, including heating and air-conditioning, warning and scene lights, marker and head lights, step and ground lights, compartment lights, and other low voltage equipment. It excludes intermittent loads, such as starter, primer, reel rewind motors, sirens, and horns.

A.17.8.4 The alternator is supposed to be able to supply the total continuous electrical load, as adjusted by the load management system. If the electrical system is working properly and is capable of sustaining the electrical load, no current should be drawn from the batteries during this test. The voltage at the battery terminals should remain constant if the batteries are fully charged or go up if the batteries are not fully charged. The allowance for a drop of 0.05 V allows for normal voltage variation and instrument errors.

A.17.9.3 An excessive voltage drop across a power relay or solenoid indicates a problem with the component and, if not repaired, will often lead to a failure of the device by which it is controlled.

A.18.1 Some fire apparatus is equipped with an auxiliary pump or a transfer pump. Any water pump used in firefighting operations not classified as a fire pump or industrial supply pump should be tested on an annual basis and the test results examined year-to-year for unexplained changes that could indicate developing problems with the pump or the engine driving the pump.

If there are no test results and no test procedure from previous testing of the pump, the procedure that follows is recommended on an annual basis.

Determine the pump shutoff pressure as follows:

(1) Engage the pump and, while taking suction from the water tank, close the discharge valve and advance the engine speed until the discharge pressure ceases to increase, taking care not to run the pump in this condition for more than 1 minute.
(2) Record the pump shutoff pressure.

Determine the discharge pressure and volume operating from the water tank on the apparatus as follows:

(1) Open the discharge valve and advance the engine speed until the pump is operating at the highest discharge rate possible for the normal pump discharge pressure, recognizing that the maximum discharge rate might be governed by the capacity of the pump or might be governed by the size and arrangement of the piping between the water tank and the pump.
(2) Measure the discharge rate using a flowmeter, a hoseline with a smoothbore nozzle of sufficient size, or another method.
(3) Continue to discharge water for 10 minutes or until the pressure begins to drop, whichever comes first, measuring the discharge rate and discharge pressure at 5 minute intervals.
(4) Average the discharge rates measured and the discharge pressure readings and record the results.

Determine the discharge pressure and volume operating from draft as follows:

(1) If the pump has other than an exhaust gas primer, cap the pump intake and close any discharge valves or cap any discharge outlets, operate the priming pump to develop at least 17 in. Hg (57.4 kPa) vacuum, and record the vacuum at the beginning and end of 5 minutes.
(2) Operate the pump at the maximum discharge rate that can be obtained at the normal pump discharge pressure when drafting using the suction hose carried on the fire apparatus for that pump at a lift of up to 10 ft (3 m).
(3) Measure the discharge rate using a flowmeter, a hoseline with a smoothbore nozzle of sufficient size, or another method.
(4) Continue to discharge water for 10 minutes, measuring the discharge rate and discharge pressure at 5 minute intervals.
(5) Average the discharge rates measured and the discharge pressure readings and record the results.
(6) Record the pump site conditions (suction hose size and length, lift, atmospheric pressure) and the pump test results, so the test can be repeated under similar conditions in future years.

Copyright National Fire Protection Association
Provided by IHS under license with NFPA
No reproduction or networking permitted without license from IHS
Not for Resale

A.18.2 "Major repairs" does not necessarily refer to the length of time that a repair takes but rather whether or not a repair affects a major component of the pump assembly so as to require assurance after the repair that the pump is still operating properly.

A.18.3.1 It is preferable to test apparatus at draft. It is important that a proper site be selected for the testing. Clean, freshwater is desirable, but, where saltwater is drafted, the pump, piping, fittings, and pressure-regulating governors should be thoroughly flushed out after testing.

The apparatus should be parked as close as possible to the water's edge. It is usually more convenient to have the pump control panel side face away from the water. The intake(s) with shortest distance to the pump impeller should be used. Front or rear intakes on midship pumps should be avoided, as the piping between the pump and inlet is usually more restrictive than the side intakes.

The size and number of the suction hose(s) to be used will depend on the altitude and the lift as well as the rated capacity of the pump to be tested. Chafing pads should be provided to prevent damage to the suction hose when the hose is in contact with sharp edges of docks, manholes, walls, and rocks.

A.18.3.2 Testing the pump at draft is preferable to testing from a hydrant. The true performance of the pump is easier to evaluate while pumping from draft. If no suitable drafting site is available, testing the pump from a hydrant is acceptable. Care must be taken to ensure that the discharge gauge readings reflect the pressure necessary for the pump to be performing at the needed net pump pressure. For example, if the intake pressure gauge reads 30 psi (207 kPa) and the test requires a 150 psi (1034 kPa) net pump pressure, the discharge test gauge should read 180 psi (1241 kPa).

A.18.4 If conditions are not within the specified limits, the test should be delayed until they are satisfactory; otherwise, the results will need to be confirmed by another test at a later date. It is particularly important that the water supply be nonaerated and not over 90°F (32°C). If these criteria are not met, the pump performance could be seriously affected.

An attempt should be made to duplicate the environmental conditions and test setup as closely as possible from year to year, so that differences in test results can be attributed to changes in the engine or pump, and not to environmental or test conditions.

A.18.5.1.1 Table 18.5.1.1.1(a) shows the suction hose size and number of suction lines to be used for testing at elevations up to 2000 ft (600 m). For elevations greater than 2000 ft (600 m), suction hose size and quantity might have to be increased to maintain the desired pump performance.

A.18.5.1.2 The intake hose should always be connected to an intake on the opposite side of the apparatus from the pump operator's position.

A.18.5.2.1 A maximum flow velocity of 35 ft /sec (10.7 m/sec) is desirable and is equal to approximately 500 gpm (2000 L/min) flowing through 2½ in. (65 mm) hose.

Where two or more lines are indicated for use with one nozzle, they are to be siamesed into a heavy-stream appliance. The purpose of the hose is to convey water from the discharge side of the pump to the nozzle, monitor, or flow-measuring device where the volume will be measured and the water will be discharged to the atmosphere. Single or multiple larger diameter hoselines can be used for this purpose as well. The length and size of the hose are not factors, unless the length and size together create excessive friction loss that requires the pump to operate above the net pump pressure that is required for the test to achieve the rated flow. If relatively short lengths of hose are used, the total friction loss that is necessary to reduce the pump discharge pressure to the required nozzle pressure can be increased by partially closing the discharge valves on the apparatus.

For the protection of the operator, hoselines should not be connected to the pump at the operator's position. The hose that is used should be "attack hose," as defined by NFPA 1961, *Standard on Fire Hose*, and should have been recently tested in accordance with NFPA 1962, *Standard for the Inspection, Care, and Use of Fire Hose, Couplings, and Nozzles and the Service Testing of Fire Hose*.

A.18.5.3.2 Nozzles that are suitable for testing usually can be found in the regular equipment of a fire department. However, the actual coefficient of discharge of each nozzle should be known; otherwise, test results could be erroneous. The actual coefficient of discharge needs to be determined by tests conducted by competent persons who are using equipment such as weigh tanks or calibrated flowmeters. Nozzles should be used with portable or mounted monitors. Hand-held nozzles should not be used.

The size of the nozzle that is used usually is chosen to give the desired discharge at a nozzle pressure between 60 psi and 70 psi (410 kPa and 48 kPa). This pressure is neither so high that the pitot is difficult to handle in the stream nor so low that the normal inaccuracies of a gauge that is used at low pressure would come into play. Nozzle (pitot) pressures less than 50 psi (350 kPa) or higher than 100 psi (690 kPa) should be avoided. The nozzle should always be used in conjunction with a securely placed monitor; a test should never be conducted while any person holds the nozzle. Failure to abide by this recommendation can cause serious injuries.

Only smoothbore nozzles should be used. Care should be taken that washers or gaskets do not protrude into the nozzle, because a perfectly smooth waterway is essential. Nozzle tips of ¾ in. to 2¼ in. (19 mm to 57 mm) inside diameter are desirable for use during various capacity and pressure tests. They should be free of nicks and scratches to ensure a smooth stream. Tips should be measured, preferably after being attached and made ready for the test, to ensure that there is no mistake about the size of the tip being used.

A.18.5.3.2.2 A pitot tube with an air chamber and pressure gauge is necessary for determining the velocity pressure of the water at the nozzle. The pitot tube should be kept free of dirt and the air chamber free of water. Any water that accumulates in the air chamber should be removed after each test. The knife edges will get battered in service and need to be kept sharp to reduce as much spray as possible caused by inserting the pitot into the stream.

To ensure accurate and consistent readings, pitot tubes should be fixed in the center of the stream, with the end of the tube located away from the end of the nozzle by a distance that is equal to half of the nozzle diameter.

See Annex B, Table B.3(a), Table B.3(b), Table B.3(c), and Table B.3(d) for information on determination of flow rates with nozzles.

A.18.5.4.1 It is important that the gauge be sufficiently accurate to ensure that test results are reliable. Grade A gauges in accordance with ASME B40.100 must be accurate within 2 percent of the span over the entire scale, and within 1 percent over the middle half of the scale. This means that a gauge of

Copyright National Fire Protection Association
Provided by IHS under license with NFPA
No reproduction or networking permitted without license from IHS
Not for Resale

0–400 psi (0–2800 kPa) will be accurate within 4 psi (28 kPa) from 100 psi to 300 psi (700 kPa to 2100 kPa). Grade 3A or Grade 4A gauges, which are used for calibrating other gauges, must be accurate within 0.25 percent or 0.10 percent, respectively, over the entire span.

While a 0–400 psi (0–2800 kPa) range is not preferred per ASME B40.100, such gauges are readily available. Graduation increments should be no greater than twice the allowable error in the middle of the scale [8 psi maximum on a 0–400 psi Grade A gauge (56 kPa maximum on a 0–2800 kPa Grade A gauge)], and smaller increments are recommended. Many variations and special constructions are available, and gauge manufacturers can be contacted for their recommendations.

A.18.5.6 If a counter speed shaft is not provided, the engine speed can be read with a phototachometer or strobe light off a rotating element.

A.18.6 It is recommended that the fire department duplicate the test conditions to the extent possible from year to year to allow more accurate comparison of data over a period of time. These conditions should include the following:

(1) Lift
(2) Air and water temperature
(3) Suction hose size, length, and style
(4) Strainer type
(5) Intake and discharge hose layout

A.18.6.3 The engine compartment should remain closed during the pumping test, unless the apparatus was designed to an older standard that permitted testing with the compartment open.

A.18.6.3.2.1 The 1996 edition of NFPA 1901 added a requirement stipulating that, if the engine that drives the pump also drives a fixed power source, that engine needs to be able to power the fixed power source at a minimum of 50 percent of its rated capacity while the pump is operating at rated capacity. Older fire apparatus might or might not have the engine horsepower to run both simultaneously. It is recommended that, where the same engine drives both the pump and the fixed power source, the capability to run both should be investigated so the operator will know the capability of the apparatus.

A.18.7.1 Other data that should be obtained are indicated on the test form shown in Figure C.3(c). The layout of the hose and nozzle and data about the pump and engine should be recorded.

A.18.7.3 Pump shift controls might include electrical, pneumatic, or mechanical components working individually or in combination to shift the pump drive system into and out of pump mode. Some pumps have manual backup shift controls. Pump shift indicators in-cab and on the operator's panel on split-shaft PTO pump drive systems typically require an electromechanical device, such as a switch mounted on the pump transmission, to sense pump shift status.

A.18.7.4 Beginning with the 1991 edition of NFPA 1901, fire apparatus equipped with electronic or electric engine throttle controls are required to include an interlock system to prevent engine speed advancement, unless the chassis transmission is in neutral with the parking brake engaged; or unless the parking brake is engaged, the fire pump is engaged and the chassis transmission is in pumping gear; or unless the apparatus is in the "okay to pump" mode.

A.18.7.4.1 While this standard only requires testing of the interlock in two configurations, Table 18.7.4.1 shows the various combinations in which the chassis transmission gear, the parking brake, and the pump shift in the driving compartment can be arranged, and whether the engine speed control should be adjustable at the pump operator's panel when that combination exists. The person testing the fire apparatus might wish to test whether the engine speed control is or is not capable of being advanced as shown for the other configuration shown in the table.

A.18.7.4.2 While this standard only requires testing of the interlock in two configurations, Table 18.7.4.2 shows the various combinations in which the chassis transmission gear, the parking brake, and the pump shift in driving compartment can be arranged, and whether the engine speed control should be adjustable at the pump operator's panel when that combination exists. The person testing the fire apparatus might wish to test whether the engine speed control is or is not capable of being advanced as shown for the other configuration shown in the table.

A.18.7.4.3 While this standard only requires testing of the interlock in two configurations, Table 18.7.4.3 shows the various combinations in which the chassis transmission gear, the parking brake, and the pump shift in driving compartment can be arranged, and whether the engine speed control should be adjustable at the pump operator's panel when that combination exists. The person testing the fire apparatus might wish to test whether the engine speed control is or is not capable of being advanced as shown for the other configuration shown in the table.

A.18.7.6 At the time of purchase, a pump must be able to develop a vacuum of 22 in. Hg (75 kPa) with a capped suction hose and must hold the vacuum with a drop not in excess of 10 in. Hg (34 kPa) in 5 minutes. This is basically a test of the priming system and the tightness of the pump and fittings, not a test of the ability to maintain a vacuum while pumping water.

The number, length, and condition of suction hose, as well as altitude, water temperature, atmospheric pressure, and lift, are all factors that affect pumping from draft.

A.18.7.6(7) By conducting a second vacuum test with the valves closed on the intakes so equipped and the caps or plugs removed on those intakes, a leaking intake valve would be detected.

A.18.7.7.4 If the pump is a two-stage, parallel/series-type unit, then operation of the transfer (that is, changeover) valve should be checked thoroughly. Conducting the pumping test with the transfer valve positioned as specified in 18.7.7.4 will ensure that the valve is exercised. If a comparison with the original engine speeds shows a significant difference for any of the tests, one of the problems could be with the transfer valve.

A.18.7.8.3 If the pump is a two-stage, parallel/series-type unit, then operation of the transfer (that is, changeover) valve should be checked thoroughly. Conducting the pumping test with the transfer valve positioned as specified in 18.7.8.3 will ensure that the valve is exercised. If a comparison with the original engine speeds shows a significant difference for any of the tests, one of the problems could be with the transfer valve.

A.18.7.9 Care should be taken to perform the pressure control tests using net pump pressure and net pressure rise readings. Some pressure control systems might not operate correctly if the hydrant pressure is too high; the system manufacturer's manual should be consulted for information.

Copyright National Fire Protection Association
Provided by IHS under license with NFPA
No reproduction or networking permitted without license from IHS
Not for Resale

A.18.7.9.1.3 Closing all discharges in less than 3 seconds could cause instantaneous pressure rises that the pressure control device might not be able to respond to rapidly enough to avoid damage to the pumping system. Taking more than 10 seconds to close the discharges is not a reasonable test of the pressure control device response capability. Controlling closure of the discharges can be done manually or otherwise.

A.18.7.10 Care should be taken to perform the pressure control tests using net pump pressure and net pressure rise readings. Some pressure control systems might not operate correctly if the hydrant pressure is too high.

A.18.7.10.1(3) See A.18.7.9.1.3.

A.18.7.11 One method of conducting this test is to use a second pumping apparatus to supply water to the pump being tested. Pressure from the supply pump should be increased until the receiving pump relief system opens a dump valve. The pressure at which the system opens, dumps, or otherwise starts to operate should be recorded. The pressure at which the system starts to operate should be reviewed against current operating procedures and the system adjusted accordingly.

A.18.7.12.1 The pressure gauge can be checked quickly against the test gauge for accuracy. Individual discharge lines with a gauge should be capped and the discharge valve opened slightly. The test gauge, the master discharge gauge, and the discharge gauge should all indicate the same readings.

A.18.7.13.1 Flowmeters need to be checked individually using a hose stream with a smoothbore tip and a pitot tube to measure the actual flow.

A.18.7.14(9) Rates less than the rate established when the apparatus was new, or than established in previous testing, indicate problems in the tank-to-pump line or tank.

A.18.8 Test data forms for recording the test readings and other necessary data should be provided. An example of a suitable form is shown in Figure C.3(c). The use of such a form will help to ensure that all needed data are obtained.

A.18.8.1 When operating at or near full engine power while stationary, the generated heat can raise the temperature of certain chassis components, pumping system components, or both above the level that can be touched without extreme discomfort or injury. However, as long as the apparatus can be operated and used satisfactorily for the required duration of the test under such conditions and the engine coolant temperature is within normal range, the rise in temperature should be considered acceptable.

For the pumping test, normal wear in the pumping system can require speeds greater than those required at the time of delivery. Such variances are acceptable as long as the apparatus passes the pumping test without exceeding the governed engine speed.

A.18.8.3 If the test conditions are equal to those at the time of delivery of the apparatus and the speed of the engine increases by more than 10 percent of the original engine speed, the reason for the decrease in performance should be determined and the deficiency corrected. Where test conditions are significantly different from the original test conditions at the time of delivery, results should be compared with previous years' tests. The test conditions should be maintained as consistently as possible from test period to test period.

A.18.8.6 There are two conditions under which rerating a pump on a fire apparatus should be considered. The first is when the apparatus is delivered or repowered with an engine that is capable of supplying additional power beyond that which is needed by the pump to meet its required rating when new, and where the pump is designed to permit a larger capacity rating. This condition might require the addition of suction intakes or pump discharges to take advantage of that capacity. The fire apparatus manufacturer or pump manufacturer should be consulted as necessary to ensure that all components of the pumping system are adequate for the potential rerating.

The second condition is when the environment in which the engine/pump was initially delivered has changed and the engine can no longer achieve its original performance. This situation can occur when an engine/pump passed the original pump rating test with little or no reserve and the apparatus has been relocated to a higher elevation, or natural wear within the engine has reduced the power output.

The pump should not be considered for rerating if the engine is seriously worn or should have major restorative work. The pump also should not be considered for rerating if the results of testing show the pump has signs of wear or other problems. In these cases, there is a good chance the pump will not pass the complete pump test, thus wasting time and money to get an accredited third-party testing organization to witness and certify the tests. Problems with engine wear, pump wear, pump blockages, or other issues with the pump will worsen at an accelerated rate if they are not corrected, potentially resulting in catastrophic failure during an emergency.

It might be necessary, for various reasons, to continue to use the pump on an apparatus that does not meet its original rating until the pump can be repaired. This is an operational decision that needs to be made on a case-by-case basis, depending on the deficiency of the pump and the apparatus that is available to replace the deficient apparatus while repairs are being made. Rerating the pump downward where such deficiencies are present only creates a false sense of vehicle capability.

A.19.1.2 Full nondestructive testing (NDT) can be desirable on a more frequent basis than every 5 years, depending on the service to which the aerial device is subjected. Extensive use of the aerial device in urban environments would be a reason for more frequent testing. Many departments have found aerial devices damaged not by use but by transport over rough roads that wrack the device in its bed.

A.19.1.3.1 If possible, the manufacturer of the aerial device should be consulted when structural defects are revealed by the service test in this standard. The recommendations for repair that are made by the manufacturer should be followed strictly. However, if the manufacturer is no longer in business, the AHJ must choose a repair facility to conduct the repair work. Choosing a repair facility to perform structural repair on an aerial apparatus is a process that requires a great deal of research and careful thought. Some of the items that should be considered include the following:

(1) Does the facility have experience with the same structural repair needed by the aerial device, and can the facility provide a reference list?
(2) Does the facility have the original design, construction, and operation specifications for the make and model of the aerial device?
(3) Does the facility have in its possession written procedures for structural repair that were developed previously by the manufacturer of the aerial device?
(4) Does the facility employ an engineering staff to analyze structures and recommend structural repair methods?

Copyright National Fire Protection Association
Provided by IHS under license with NFPA
No reproduction or networking permitted without license from IHS
Not for Resale

(5) Will the facility provide an engineering analysis that substantiates the structural repair method recommended?
(6) Will the facility provide an independent certification by a professional engineer of the analysis that substantiates the recommended structural repair method?
(7) Will the facility warrant the work performed?

A.19.1.4 Specific, written checklists, which combine the manufacturer's recommended checks with the inspection procedures of this standard and any other checks found desirable by the department, should be developed by each fire department for its style and brand of apparatus to ensure a systematic and complete inspection.

A.19.1.5 Qualified vehicle operators are either those who have been schooled in the operation of the vehicle by the manufacturer or fire department instructors who have received special training in all phases of vehicle operations. Operators of fire department apparatus should complete a course in driver training and aerial ladder or elevating platform operational procedures, including positioning on the fireground. Specific training should be given in procedures to be followed if the hydraulic system fails. A thorough understanding of safe load capacity, stabilizing procedures, and operational limits is paramount. Safety procedures, proper shutdown, and boom-lowering procedures are also critical. Operators should be tested upon completion of training. Periodic retraining and retesting should also be required.

A.19.8.4.16.2 If the aerial device is operated for a considerable time period prior to the drift test, the hydraulic fluid temperature will be elevated. During the 1 hour test, the hydraulic fluid will cool to ambient temperature, and it can change in volume by 3 percent to 4 percent, leading to erroneous test results.

A.19.8.5.8.2 See A.19.8.4.16.2.

A.19.8.6.6(2)(b) If heat sensors are provided, they are normally located on the last 10 ft (3 m) of each top rail section. If heat sensors are not installed by the manufacturer, the manufacturer should be consulted for installation recommendations.

A.19.8.6.8(2) Some hollow I-beam aerial ladder base rails have an additional layer of sheet metal spot welded to the bottom of the base rail on the bed ladder section. This additional metal is commonly known as a *glove*. Base rails constructed in this manner are susceptible to corrosion between the inside of the glove and the outside of the base rail when water is trapped in this area. This corrosion is not detected easily, as the area inside the glove cannot be inspected visually unless the glove is removed. If any corrosion or rust can be seen bleeding from the glove, the manufacturer should be contacted and the glove removed to determine whether corrosion has weakened the base rail.

A.19.8.6.8(3)(b) If heat sensors are not installed by the manufacturer, the manufacturer should be consulted for installation recommendations.

A.19.8.6.28.2 See A.19.8.4.16.2.

A.19.8.7.1 A strong wind on the long cable and test load will introduce a pendulum action that will potentially add load to the ladder far beyond the test weight.

A.19.8.7.4.2 Figure A.19.8.7.4.2 illustrates such a hanger.

A.19.8.7.4.8 Figure A.19.8.7.4.8 shows an example of a test weight container.

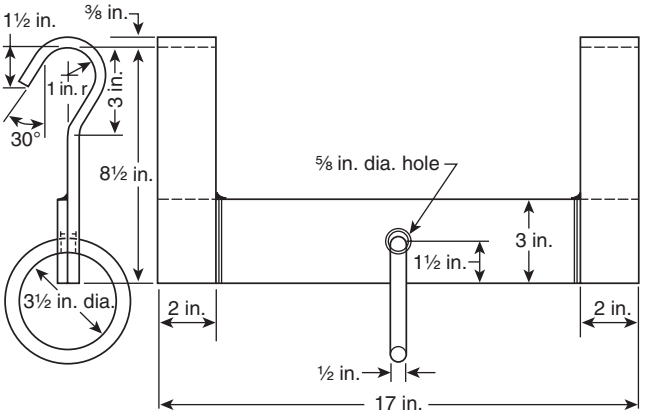

For SI units, 1 in. = 25.4 mm.

FIGURE A.19.8.7.4.2 Hanger for Test Cable.



FIGURE A.19.8.7.4.8 Test Weight Container.

A.19.8.7.5.2 See Figure A.19.8.7.4.2.

A.19.8.8.2 The time within which an aerial device is required to be raised from the bedded position to maximum elevation and extension and rotated 90 degrees after the stabilizers are set is shown in Table A.19.8.8.2. Two or more of these functions are permitted to be performed simultaneously.

A.19.8.9.4.1 The purpose of this test is primarily to detect water leaks in the turntable center swivel area. However, leaks in other areas also could be detected during this test.

A.19.8.9.4.1.2 It is recommended that a valve or restricting orifice plate be placed in the hoseline where it connects to the ladder pipe intake to throttle the water entering the system. This precaution allows only a controlled flow if a component breaks during the test.

A.19.8.9.4.2 The purpose of this test is primarily to detect water leaks in the seals between the telescoping water pipes. However, leaks in other areas could also be detected during this test.

Copyright National Fire Protection Association
Provided by IHS under license with NFPA
No reproduction or networking permitted without license from IHS
Not for Resale

Table A.19.8.8.2 Maximum Time to Elevate, Rotate, and Extend an Aerial Device

Edition of NFPA 1901	Aerial Ladder	Elevating Platform	Water Tower
2003	120 seconds for rated vertical height of 110 ft (34 m) or less 180 seconds for rated vertical height over 110 ft (34 m)	150 seconds for rated vertical height of 110 ft (34 m) or less No time limit for rated vertical height over 110 ft (34 m)	105 seconds
1999	120 seconds for rated vertical height of 110 ft (34 m) or less 180 seconds for rated vertical height over 110 ft (34 m)	150 seconds for rated vertical height of 110 ft (34 m) or less No time limit for rated vertical height over 110 ft (34 m)	105 seconds
1996	120 seconds for rated vertical height of 110 ft (34 m) or less 180 seconds for rated vertical height over 110 ft (34 m)	150 seconds for rated vertical height of 110 ft (34 m) or less No time limit for rated vertical height over 110 ft (34 m)	105 seconds
1991	120 seconds for rated vertical height of 110 ft (34 m) or less 180 seconds for rated vertical height over 110 ft (34 m)	150 seconds for rated vertical height of 110 ft (34 m) or less No time limit for rated vertical height over 110 ft (34 m)	105 seconds
1985*	60 seconds	150 seconds	105 seconds
1979	60 seconds	150 seconds	105 seconds
1975	60 seconds	150 seconds	150 seconds
1973	60 seconds	150 seconds	120 seconds
1971	60 seconds	150 seconds	120 seconds

* Prior to 1991, there was no differentiation in time related to the length of the aerial device.

A.19.8.9.4.3 It is recognized that fittings could drip slightly during the test, and such dripping is acceptable. However, any steady leak is a sign of a developing problem that should be corrected.

A.19.8.11 Spectrochemical analysis of the hydraulic fluid is intended to identify contaminants in the hydraulic system. Typically, the analysis will identify contaminants in parts per million (ppm) or by percent. Many laboratories that perform the analysis will provide service recommendations with their hydraulic fluid analysis report. In most cases, recommendations are limited, unless a reference analysis has been performed. The reference analysis is an analysis of new hydraulic fluid from the fluid manufacturer/supplier prior to the fluid being put into the aerial hydraulic system. Subsequent hydraulic fluid analyses are then compared to the reference analysis. By comparing the contaminant levels, trends can be identified and can give the analyzing laboratory specific service recommendations.

A.19.8.12 Figure C.3(d) shows a form that can be used to record the results of the inspection and test. This form can be supplemented with other data specific to the aerial device being inspected and tested.

A.19.9.7.3.2 If the aerial device is operated for a considerable time period prior to the drift test, the hydraulic fluid temperature will be elevated. During the 1-hour test, the hydraulic fluid will cool to ambient temperature, and it can change in volume by 3 percent to 4 percent, leading to erroneous test results.

A.19.9.7.5(4)(b) If heat sensors are not installed by the manufacturer, the manufacturer should be consulted for installation recommendations.

A.19.9.8.6(4)(b) See A.19.9.7.5(4)(b).

A.19.9.8.13.2 See A.19.9.7.3.2.

A.19.9.9.1(4)(b) See A.19.9.7.5(4)(b).

A.19.9.9.12.2 See A.19.9.7.3.2.

A.19.9.13.3 See A.19.8.8.2.

A.19.9.14.3.2 It is recommended that a valve or restricting orifice plate be placed in the hoseline where it connects to the elevating platform intake to throttle the water entering the system. This precaution allows only a controlled flow if a component breaks during the test.

A.19.9.14.3.4 It is recognized that fittings could drip slightly during the test, and such dripping is acceptable. However, any steady leak is a sign of a developing problem that should be corrected.

A.19.9.16 See A.19.8.11.

A.19.9.17 See A.19.8.12.

A.19.10.10.2 See A.19.8.8.2.

Copyright National Fire Protection Association
Provided by IHS under license with NFPA
No reproduction or networking permitted without license from IHS
Not for Resale

A.19.10.11.3.4 It is recognized that fittings could drip slightly during the test, and such dripping is acceptable. However, any steady leak is a sign of a developing problem that should be corrected.

A.19.10.13 See A.19.8.11.

A.19.10.14 See A.19.8.12.

A.20.3 The four methods for testing a foam proportioning system for calibration accuracy are detailed below.

Test Method 1: Substituting Water for Foam Concentrate. The foam system is operated at the water flow rates at which the system is to be tested. Water is used as a substitute for foam concentrate. The substitute water for the foam concentrate is drawn from a calibrated tank instead of foam concentrate from the foam concentrate tank. The volume of water drawn from the calibrated tank divided by the volume of water pumped over the same time period multiplied by 100 represents the percentage of foam the foam proportioner is producing.

Test Method 2: Measuring Foam Concentrate Pump Output Directly. With some direct-injection systems, it is possible to directly measure the foam concentrate pump output. With the foam system operating at a given water flow rate, and using either foam concentrate or water as a substitute for foam concentrate, the output of the foam concentrate pump is measured by diverting that output into a calibrated container for direct measurement over a measured period of time. An alternative is to measure the foam concentrate flow or water substitute with a calibrated meter.

Test Method 3: Determining Foam Percentage by Use of a Refractometer. A refractometer is used to measure the refractive index of a foam solution sample.

First, a base calibration curve is prepared using the same water and foam concentrate that will be used with the system to be tested. Three known foam solution samples are needed and should include the following:

(1) The nominal intended percentage
(2) The nominal intended percentage plus 1 percent
(3) The nominal intended percentage minus 1 percent

If the nominal intended percent is 1 percent or less, the three samples should be as follows:

(1) The nominal intended percentage
(2) The nominal intended percentage plus 0.3 percent
(3) The nominal intended percentage minus 0.3 percent

The required amount of water is placed in a 100 ml or larger graduated cylinder, leaving space for the foam concentrate. A 10 ml pipette or 10 cc syringe is used to carefully add the required amount of foam concentrate to the water. Each measured foam solution is then poured from the graduated cylinder into a 100 ml or larger plastic bottle, and the bottle is marked to indicate the percentage of solution it contains. The bottle is capped and thoroughly shaken to mix the foam solution.

An alternative method for making the three foam solution samples is to use a very accurate scale. The density of the foam concentrate needs to be known and can be found on the product data sheet or the Material Safety Data Sheet (MSDS) for the foam concentrate. For example, to make a 100 ml sample of a 3 percent foam solution using a foam concentrate with a density of 1.04, 97 g of water is measured into a beaker and 3.12 g of foam concentrate is added to the beaker (1.04×3 g = 3.12 g).

After the foam solution samples are thoroughly mixed, a refractive index reading is taken of each foam solution sample. This is done by placing a few drops of the solution on the refractometer prism, closing the cover plate, and observing the scale reading at the dark field intersection. Because the refractometer is temperature compensated, it could take 10 seconds to 20 seconds for the sample to be read properly. It is important to take all refractometer readings at an ambient temperature of 50°F (10°C) or above.

Using standard graph paper, the refractive index readings are plotted on one axis and the percentage of concentration on the other. This plotted curve serves as the known baseline for the test series. The solution samples should be set aside in the event the measurements need to be checked.

Foam solution samples are then collected from the proportioner system, making certain that the samples are taken at an adequate distance downstream from the foam proportioner being tested to allow for complete mixing of the water and the foam concentrate. Refractive index readings of the samples are taken and compared to the plotted curve to determine the percentage of foam.

This method might not be accurate for AFFF, alcohol-resistant foam, or certain other types of foam that typically exhibit very low refractive index readings. Also, the refractometer method should not be used when testing foam percentages of 1 percent or lower because the accuracy for determining the percentage of foam concentrate in a solution when using a refractometer is ±0.1 percent, at best. For this reason, test method 4, the conductivity method, might be preferable where AFFF, alcohol-resistant foam, or 1 percent or less foam is to be tested.

Test Method 4: Determining Foam Percentage by Use of a Conductivity Meter. The conductivity test method is based on changes in electrical conductivity as foam concentrate is added to water. Conductivity is a very accurate method, provided there are substantial changes in conductivity as foam concentrate is added to the water in relatively low percentages. Because saltwater and brackish water are very conductive, this method might not be suitable where these waters are used because of the small conductivity changes as foam concentrate is added. If saltwater or brackish water is used, it is necessary to make foam solutions in advance to determine if adequate changes in conductivity can be detected. This method cannot be used if the water has more total solids than the foam concentrate.

The following three variations of this test method can be used to determine the foam percentage by the conductivity method:

(1) *Direct Reading Conductivity Method.* A sample of the water to be used in the test is put in a 100 ml or larger container. The conductivity meter head is immersed in the water sample, and the meter display is set at zero. If the direct reading foam solution conductivity meter is mounted in a discharge line, the meter should be set at zero with plain water flowing.

If the conductivity meter manufacturer does not indicate that the percentage of foam solution can be read directly for the foam concentrate being used, a calibration curve needs to be developed. The calibration curve might show that the direct meter readings are correct for the foam concentrate being used, or it might indicate that the calibration curve needs to be used when that foam concentrate is used in the test.

The foam proportioner system is operated, and a sample of the foam solution produced by the system is collected using a 100 ml or larger container. The conductivity meter head is immersed in the foam solution sample, and the percentage of the foam solution is read on the meter display. If the conductivity meter is mounted in a discharge line, the percentage of the foam solution is read on the meter display while foam solution is being discharged.

Copyright National Fire Protection Association
Provided by IHS under license with NFPA
No reproduction or networking permitted without license from IHS
Not for Resale

(2) *Conductivity Comparison Method.* A sample of the water to be used in the test is put in a 100 ml or larger container. Using a conductivity meter reading in microsiemens per centimeter (μS/cm), the conductivity value of the water sample is determined. The foam proportioning system is operated, and a sample of the foam solution produced by the system is collected in a 100 ml or larger container. Using the conductivity meter, the conductivity value of the foam solution sample is determined.

The conductivity value of the water sample is subtracted from the conductivity value of the foam solution sample, and the result is divided by 500 to obtain the percentage of foam concentrate in the solution.

$$\% \text{ foam} = \frac{\text{Conductivity of foam solution} - \text{Conductivity of water}}{500}$$

Note that the divisor is 500 only if the conductivity meter units are microsiemens per centimeter (μS/cm). Other units of conductivity can be used, but the value of the divisor (500) will need to be adjusted.

(3) *Conductivity Calibration Curve Method.* A base calibration curve is prepared using the water and foam concentrate from the system to be tested. Three known foam solution samples are made using the procedure in test method 3. After the foam solution samples are thoroughly mixed, the conductivity of each solution is measured using a conductivity meter. Care should be taken to ensure that the proper procedures are used for taking readings and that the meter is switched to the correct conductivity range. Most synthetic-based foams used with freshwater result in foam solution conductivity readings of less than 2000 μS/cm. Protein-based foams used with freshwater generally produce conductivity readings in excess of 2000 μS/cm. Because of the temperature-compensation feature of the conductivity meter, it could take a short time to obtain a consistent reading.

Once the solution samples have been measured and recorded, the bottles should be set aside as control sample references. The conductivity readings then should be plotted on standard graph paper. It is more convenient to place the foam solution percentage on the horizontal axis and the conductivity readings on the vertical axis.

A straight line should be drawn that approximates the connection of all three points. While it might not be possible to connect all three points with a straight line, they should be very close to the line. If not, the conductivity measurements should be repeated, and, if necessary, new control sample solutions should be prepared and used until all three points plot in a nearly straight line. This plot serves as the known base (calibration) curve to be used for the test series.

Once a base curve has been plotted, foam solution samples are collected from the proportioner system. The conductivity of the test samples is measured, and the percentage of foam solution is determined from the base curve. Foam solution samples that have been allowed to drain from expanded foam should not be used, because they can produce misleading conductivity readings.

A.22.2 "Major repairs" does not necessarily refer to the length of time that a repair takes but rather whether or not a repair potentially affects the operation or safety of any aspect of the line voltage electrical system. This might include repairs unrelated to the line voltage electrical system, such as body repairs, that might disturb wiring or other parts of the system. Testing should be performed to verify that, after the repair, the system is operating properly and safely.

A.22.4.1 All loads must be disconnected while doing continuity testing.

A.22.4.1.1 Inexpensive receptacle testers with lights to indicate correct or problem wiring are available from any hardware store or home center. Many also include a button for testing GFCIs as needed for the testing in 22.5.2. Testing can also be done with the power off using a continuity tester to the hot and neutral busses in the circuit breaker panel for the hot and neutral wires and to the body for the protective ground wire. Testing of twist lock or other special receptacles may require the use of an adapter.

A.22.4.1.2 With an isolated system, the three light testers will, and should, indicate an open ground. To maintain the safety of the isolated system, it is important to verify the isolation between the current carrying conductors and the body. This test detects faults that do not cause other indications.

A.22.4.2 Receptacles supplied from a shore line should always have a bonded neutral when being powered from the shore line, and should have an isolated neutral when powered from the on-board source if the on-board system is isolated. If the transfer switch operation is powered from the on-board power source, the testing must be done with a three light tester, which should indicate an open ground.

A.22.5 With an isolated neutral electrical system, this test is not needed and probably will not work. The leakage path to protective ground created by a tester will not create any current leakage, and thus the GFCI will not trip. Inexpensive receptacle testers with a GFCI test button and lights to indicate correct or problem wiring are available from any hardware store or home center. This same tester can be used for the receptacle testing in 22.4.1.1 Testing of twist lock or other special outlets may require the use of an adapter.

A.22.6.1 This testing may be performed at the same time as the power source testing required in Section 22.3 or Section 22.7.

A.22.6.3 Heating of plugs, receptacles, and other points of connection are indications of loose connections. All points should be checked after at least 5 minutes of time under load. Any devices with hot connectors should be removed from service until repaired.

A.22.7.2 Some large power sources have the capability to produce more power than can be used by all available appliances in the fire station. Load banks can be rented from local rental agencies. Caution should be used when testing generators with motor loads to avoid damage due to starting current requirements.

A.22.8.3 It is very important to connect all hot and neutral busses together so that no current flows through connected loads.

Annex B Conducting Pumping Tests

This annex is not a part of the requirements of this NFPA document but is included for informational purposes only.

B.1 Test Parameters. At the start of the test, attention should be paid to the ease with which the pump can develop a vacuum. The following tasks should be performed before starting to prime the pump:

(1) Close all discharge, drain, and water tank valves and petcocks.
(2) Make sure that the gaskets in the suction hose are in place and free of foreign matter.

Copyright National Fire Protection Association
Provided by IHS under license with NFPA
No reproduction or networking permitted without license from IHS
Not for Resale

(3) Open all intake valves.
(4) Tighten all intake caps and couplings.

The priming mechanism should be started, noting the starting time and the time after prime is obtained. The starting time is defined as the instant the priming device begins to operate. The pump is considered primed when water under pressure has entered a discharge hose. For pumps of less than 1500 gpm (6000 L/min), the priming device should be able to create the necessary vacuum in 30 seconds to lift water 10 ft (3 m) through 20 ft (6 m) of suction hose of the appropriate size. The priming device on pumps of 1500 gpm (6000 L/min) or larger should be able to accomplish this in 45 seconds. An additional 15 seconds might be needed where the pump system includes an auxiliary 4 in. (100 mm) or larger intake pipe having a volume of 1 ft^3 (28,317 cm^3) or more. The controls should be operated as necessary to develop pressure, and then one discharge valve should be opened to allow the flow of water.

Testing a pump involves three interrelated, variable factors — pump speed, net pump pressure, and pump discharge rate — and a change in one factor will always produce a change in at least one of the others. For example, an increase in speed of the pump will increase the discharge rate, the pressure, or both. Adjustments of variables through changing the position of the engine throttle (which modifies pump speed), changing the hose layout or position of the discharge valves (which modifies pump pressure), or changing the nozzle size (which modifies discharge) are the only ways to reach the desired standard test condition.

The pump should be operated at reduced capacity and pressure for several minutes to allow the engine and transmission to warm up. Gradually, the pump speed should be increased until the desired pressure at the pump is reached. If the desired pressure is not attained, a length or two of hose might have to be added, a smaller nozzle used, or a discharge valve throttled. When the desired pressure is obtained at the pump, the pitot should be read to see if the required amount of water is being delivered.

If the discharge is not as great as desired and it is believed that the pump will deliver a greater quantity of water, the discharge can be increased by further speeding up the pump. If speeding up the pump increases the pump pressure more than 5 psi or 10 psi (34 kPa or 68 kPa), a length of hose should be taken out, a discharge valve should be opened slightly, or a larger nozzle should be used.

A speed reading should be taken at the time that the pressure readings are taken. Counting the revolutions for 1 minute generally ensures that readings will be sufficiently accurate.

When a stopwatch is used, the best and most accurate method is to leave the stopwatch running at all times, engaging the revolution counter at a chosen instant and disengaging when the hand of the stopwatch passes the same point on the dial 1 minute later.

After the engine has warmed up, there should be little change in the engine speed. It should be understood that any change in engine speed must, of necessity, produce a corresponding change in pump discharge pressure and, hence, in pitot reading, and that, other factors being equal, any change in pitot reading indicates a change in engine speed. A change in pump speed will also cause a change in discharge pressure so that whenever pump speed, discharge pressure, and pitot readings do not show corresponding changes, it is safe to assume that some reading is in error or some condition has arisen that affects the readings and needs correction. Engine speeds can be changed by working the hand throttle at the operator's position.

Automatic relief valves or pressure regulators controlling the speed of the pump should be disengaged during the test.

It is common but faulty practice to read a pressure gauge at the highest point in the swing of its needle; the center of the needle swing should always be read, as this is the average pressure. A needle valve ("snubber") in the line to the gauge can be throttled to prevent excessive vibration, but if the valve is throttled too much, the gauge pointer will no longer indicate the pressure correctly. It might not be possible to eliminate all of the pointer movement. Leaks in the line to the test gauge also can result in an incorrect gauge reading.

Special care should be taken in reading the pitot pressure; the pitot tube should be held in the center of the stream with the tip about half the nozzle diameter away from the end of the nozzle. If the pitot is brought closer to the nozzle, the reading will be increased erroneously.

Short lines of hose are always more convenient for a test layout than long ones. Generally, it is better to use a single line of 100 ft (30 m) for the pressure tests and to restrict the discharge at the pump discharge valve enough to increase the friction loss so that the desired discharge pressure will be obtained. By closely watching the pitot reading, the valve gradually can be closed as the engine speed is increased, until the discharge pressure and pitot pressure readings are both as desired. Care should be taken to ensure that the valve is not jarred open or closed as, in either case, both the capacity and discharge pressure will be affected.

When operating a pump, it is important that the engine temperature be kept within the proper range; neither a cold engine nor an excessively hot engine will provide service as good as an engine run at the proper temperature.

The oil pressure on the engine should be watched to ensure that the engine is being lubricated properly. The transmission gears should be watched for overheating. Any unusual vibration of the engine or the pump, or any leak in the pump casing or connections, should be noted and addressed. Centrifugal pumps are not self-priming and could lose their prime if there is a leak in the suction line.

Other defects in the performance of the engine or the pump should be recorded. Minor defects should be corrected immediately if possible.

B.2 Troubleshooting. Most tests are conducted without incident. Nevertheless, trouble does develop during some tests, and an effort should be made to locate the source of trouble while the apparatus remains at the test site. Some difficulties that could be experienced, and suggestions on how to trace and correct them, are discussed in B.2.1 through B.2.7.

B.2.1 Failure to prime a centrifugal pump is a frequent source of trouble, and the usual reason for the failure is an air leak in the suction hose or pump. One way to trace this trouble is to remove all discharge hoselines, cap all discharge openings and the suction hose, and operate the priming mechanism in accordance with the manufacturer's recommendations. The intake gauge should be studied to determine the maximum vacuum that is developed, which should be at least 22 in. Hg (75 kPa) at altitudes of less than 1000 ft (305 m). The primer should be stopped. If the vacuum drops 10 in. Hg (34 kPa) or more in less than 5 minutes, there is a leak in the suction hose or pump assembly; it could be in a valve, draincock, piping, casing, or pump packing. The leakage might be located by listening for air movement. Another method of checking for leaks is to connect the pump to a

Copyright National Fire Protection Association
Provided by IHS under license with NFPA
No reproduction or networking permitted without license from IHS
Not for Resale

convenient hydrant, cap the pump discharge outlets, open the hydrant, and watch for water leaks. A leak can usually be corrected at the test site.

B.2.2 Two possible causes for failure of the pump to deliver the desired capacity, pressure, or both are insufficient power and restrictions in the intake arrangement. Insufficient power is indicated by the inability of the engine to reach the required speed for the desired pumping condition. Some possible causes of insufficient power are as follows:

(1) The operator might have failed to advance the throttle far enough or might be using the wrong transmission gear position.
(2) The engine might be in need of a tune-up.
(3) The grade of fuel might be improper for adequate combustion.
(4) There might be vaporization in the fuel line.

B.2.3 Restriction in the intake arrangement is indicated if the pump speed is too high for the capacity and attained pressure levels and could be the result of any one or a combination of the following conditions:

(1) Suction hose is too small.
(2) Altitude is too high.
(3) Lift is too high.
(4) Strainer type is incorrect.
(5) Intake strainer is clogged at the pump or at the end of the suction hose.
(6) Water is aerated.
(7) Water is too warm [above 90°F (32°C)].
(8) Suction hose is collapsed or defective.
(9) Foreign material is in pump.

B.2.4 An air leak in the suction hose connections or in the pump intake manifold also will result in excessive pump speed and eventually could cause loss of prime and complete cessation of flow.

B.2.5 Insufficient pressure when operating a centrifugal pump could be the result of pumping too much water for the available power and, in multistage pumps, pumping in "volume" position instead of the required "pressure" position. This problem can be checked by partially closing off all discharge valves until only a small flow is observed and then opening the throttle until the desired pressure is reached, followed by slowly opening discharge valves and increasing engine speed as necessary to maintain pressure until the desired capacity is obtained. An improperly adjusted or inoperative transfer valve can prevent the development of adequate pressure. Likewise, the pressure control system might be set too low or be defective.

B.2.6 Engine speed differences from the original pump test could be the result of any one or a combination of the following conditions:

(1) Operating apparatus with the wrong transmission gear in use
(2) Stuck or out-of-adjustment throttle control system
(3) Restrictions in the intake arrangement
(4) Suction hose under an insufficient depth of water
(5) Air leak on the intake side of the pump
(6) Changes in environmental conditions
(7) Pump or engine wear

B.2.7 A slip of the revolution counter or its fitting will show an apparently decreased speed, and frequent checks should be made with the apparatus tachometer to verify a change in speed. A clogged pitot tube will cause a drop in the gauge reading.

B.3 Calculating the Results. If nozzles and pitot tubes have been used to measure pump capacity, the values of capacity in gallons per minute are determined by the following formula:

$$\text{gpm} = 29.83\ c(d)^2\sqrt{p}$$

where:
c = coefficient of discharge of the nozzle used
d = diameter of nozzle (in.)
p = pressure at pitot gauge (psi)

If the nozzle diameter is measured in millimeters, the diameter should be multiplied by 25.4 to convert the measurement to inches. If the pressure is measured in kilopascals (kPa), the pressure should be multiplied by 6.895 to convert the measurement to pounds per square inch (psi). The resulting flow can be converted from gallons per minute (gpm) to liters per minute (L/min) by multiplying by 3.785.

The pitot pressure should be the average of several readings and should be corrected for gauge error.

For nozzles sized from ¼ in. to 2½ in. (6.3 mm to 63 mm), values of capacity can be approximated from Table B.3(a), Table B.3(b), Table B.3(c), and Table B.3(d); however, as these values are based on certain assumed coefficients of discharge, they can be considerably at variance with the actual values. For nozzles larger than 2½ in. (63 mm), approximate values of capacity in gallons per minute can be determined by the following formula:

$$\text{gpm} = F\sqrt{p}$$

where:
F = nozzle factor from Table B.3(e)
p = pressure at pitot gauge (psi)

B.4 Lift. The lift is the difference in elevation between the water level and the center of the pump intake when an apparatus is drafting water. The maximum lift is the greatest difference in elevation at which the apparatus can draft the required quantity of water under the established physical characteristics of operation, which include the following:

(1) Design of pump
(2) Adequacy of engine
(3) Condition of pump and engine
(4) Size and condition of suction hose and strainers
(5) Elevation of pumping site above sea level
(6) Atmospheric pressure
(7) Temperature of water

The theoretical values of lift and maximum lift must be reduced by the entrance and friction losses in the suction hose equipment to obtain the actual or measurable lift.

The vacuum, or negative pressure, on the intake side of a pump is measured in inches of mercury, usually written as "in. Hg" or "Hg" (Hg is the chemical symbol for mercury). A vacuum of 1 in. of mercury is equal to a negative pressure of 0.49 psi, or 1 in. Hg = 0.49 psi. A positive pressure of 0.49 psi at the bottom of a 1 in.^{2} (645 mm^2) container will support a column of water that is 1.13 ft (0.344 m) high; therefore, a negative pressure of 0.49 psi at the top of the container will support the same column of water. This means 1 in. Hg = 0.49 psi = 1.13 ft (0.344 m) of water head.

Copyright National Fire Protection Association
Provided by IHS under license with NFPA
No reproduction or networking permitted without license from IHS
Not for Resale

Table B.3(a) Discharge Table for Smooth Nozzles — ¼ Inch Through 7⁄16 Inch — in Gallons per Minute (Nozzle Pressure Measured by Pitot Gauge)

Nozzle Pressure (psi)	Nozzle Diameter (in.)*				Nozzle Pressure (psi)	Nozzle Diameter (in.)*			
	¼	5⁄16	⅜	7⁄16		¼	5⁄16	⅜	7⁄16
5	4	6	9	13	**62**	14	22	32	44
6	4	6	10	14	**64**	14	22	32	45
7	4	7	11	15	**66**	14	23	33	46
8	5	7	11	16	**68**	14	23	33	46
9	5	8	12	17	**70**	15	24	34	47
10	6	9	13	18	**72**	15	24	34	48
12	6	10	15	19	**74**	15	24	35	48
14	7	11	15	21	**76**	15	24	35	49
16	7	12	16	22	**78**	15	24	36	50
18	7	12	17	24	**80**	16	25	36	50
20	8	13	18	25	**82**	16	25	37	51
22	8	13	19	26	**84**	16	25	37	51
24	8	13	20	27	**86**	16	26	37	52
26	9	14	21	29	**88**	16	26	38	53
28	9	14	21	30	**90**	17	27	39	53
30	10	15	22	31	**92**	17	27	39	54
32	10	15	23	32	**94**	17	27	39	54
34	11	16	23	33	**96**	17	27	40	55
36	11	16	24	34	**98**	17	27	40	55
38	11	17	25	35	**100**	18	28	41	56
40	11	18	26	35	**105**	18	29	42	57
42	11	18	26	36	**110**	19	29	43	59
44	12	18	27	37	**115**	19	30	43	60
46	12	19	28	38	**120**	19	31	44	61
48	12	19	28	39	**125**	20	31	45	63
50	13	20	29	40	**130**	20	32	46	64
52	13	20	29	40	**135**	21	33	47	65
54	13	20	30	41	**140**	21	33	48	66
56	13	21	30	42	**145**	21	34	49	68
58	13	21	31	43	**150**	22	34	50	69
60	14	22	31	43					

Note: 1 mm = 0.03937 in.; 1 kPa = 0.1450 psi; 1 gpm = 3.785 L/min.
*Assumed coefficient of discharge = 0.983, 0.983, 0.985, 0.9856.

Table B.3(b) Discharge Table for Smooth Nozzles — ½ Inch Through 1 Inch — in Gallons per Minute (Nozzle Pressure Measured by Pitot Gauge)

Nozzle Pressure (psi)	Nozzle Diameter (in.)*					Nozzle Pressure (psi)	Nozzle Diameter (in.)*				
	½	⅝	¾	⅞	1		½	⅝	¾	⅞	1
5	16	26	37	50	66	**62**	58	90	132	177	233
6	18	28	41	55	72	**64**	59	92	134	180	237
7	19	30	44	59	78	**66**	60	93	136	182	240
8	21	32	47	64	84	**68**	60	95	138	185	244
9	22	34	50	67	89	**70**	61	96	140	188	247
10	23	36	53	71	93	**72**	62	97	142	191	251
12	25	40	58	78	102	**74**	63	99	144	193	254
14	27	43	63	84	110	**76**	64	100	146	196	258
16	29	46	67	90	118	**78**	65	101	148	198	261
18	31	49	71	95	125	**80**	66	103	150	201	264
20	33	51	75	101	132	**82**	66	104	152	204	268
22	34	54	79	105	139	**84**	67	105	154	206	271
24	36	56	82	110	145	**86**	68	107	155	208	274
26	37	59	85	115	151	**88**	69	108	157	211	277
28	39	61	89	119	157	**90**	70	109	159	213	280
30	40	63	92	123	162	**92**	70	110	161	215	283
32	41	65	95	127	167	**94**	71	111	162	218	286
34	43	67	98	131	172	**96**	72	113	164	220	289
36	44	69	100	135	177	**98**	73	114	166	223	292
38	45	71	103	138	182	**100**	73	115	168	225	295
40	46	73	106	142	187	**105**	75	118	172	230	303
42	47	74	109	146	192	**110**	77	121	176	236	310
44	49	76	111	149	196	**115**	79	123	180	241	317
46	50	78	114	152	200	**120**	80	126	183	246	324
48	51	80	116	156	205	**125**	82	129	187	251	331
50	52	81	118	159	209	**130**	84	131	191	256	337
52	53	83	121	162	213	**135**	85	134	195	262	343
54	54	84	123	165	217	**140**	87	136	198	266	350
56	55	86	125	168	221	**145**	88	139	202	271	356
58	56	87	128	171	225	**150**	90	141	205	275	362
60	57	89	130	174	229						

Note: 1 mm = 0.03937 in.; 1 kPa = 0.1450 psi; 1 gpm = 3.785 L/min.
*Assumed coefficient of discharge = 0.985, 0.988, 0.988, 0.99.

Copyright National Fire Protection Association
Provided by IHS under license with NFPA
No reproduction or networking permitted without license from IHS
Not for Resale

Table B.3(c) Discharge Table for Smooth Nozzles — 1⅛ Inch Through 1⅝ Inch — in Gallons per Minute (Nozzle Pressure Measured by Pitot Gauge)

Nozzle Pressure (psi)	Nozzle Diameter (in.)*					Nozzle Pressure (psi)	Nozzle Diameter (in.)*				
	1⅛	1¼	1⅜	1½	1⅝		1⅛	1¼	1⅜	1½	1⅝
5	84	103	125	149	175	**62**	295	363	441	525	617
6	92	113	137	163	192	**64**	299	369	448	533	627
7	99	122	148	176	207	**66**	304	375	455	542	636
8	106	131	158	188	222	**68**	308	381	462	550	646
9	112	139	168	200	235	**70**	313	386	469	558	655
10	118	146	177	211	248	**72**	318	391	475	566	665
12	130	160	194	231	271	**74**	322	397	482	574	674
14	140	173	210	249	293	**76**	326	402	488	582	683
16	150	185	224	267	313	**78**	330	407	494	589	692
18	159	196	237	283	332	**80**	335	413	500	596	700
20	167	206	250	298	350	**82**	339	418	507	604	709
22	175	216	263	313	367	**84**	343	423	513	611	718
24	183	226	275	327	384	**86**	347	428	519	618	726
26	191	235	286	340	400	**88**	351	433	525	626	735
28	198	244	297	353	415	**90**	355	438	531	633	743
30	205	253	307	365	429	**92**	359	443	537	640	751
32	212	261	317	377	443	**94**	363	447	543	647	759
34	218	269	327	389	457	**96**	367	452	549	654	767
36	224	277	336	400	470	**98**	370	456	554	660	775
38	231	285	345	411	483	**100**	374	461	560	667	783
40	237	292	354	422	496	**105**	383	473	574	683	803
42	243	299	363	432	508	**110**	392	484	588	699	822
44	248	306	372	442	520	**115**	401	495	600	715	840
46	254	313	380	452	531	**120**	410	505	613	730	858
48	259	320	388	462	543	**125**	418	516	626	745	876
50	265	326	396	472	554	**130**	427	526	638	760	893
52	270	333	404	481	565	**135**	435	536	650	775	910
54	275	339	412	490	576	**140**	443	546	662	789	927
56	280	345	419	499	586	**145**	450	556	674	803	944
58	285	351	426	508	596	**150**	458	565	686	817	960
60	290	357	434	517	607						

Note: 1 mm = 0.03937 in.; 1 kPa = 0.1450 psi; 1 gpm = 3.785 L/min.
*Assumed coefficient of discharge = 0.99, 0.99, 0.993, 0.995, 0.995.

Table B.3(d) Discharge Table for Smooth Nozzles — 1¾ Inch Through 2½ Inch— in psi (Nozzle Pressure Measured by Pitot Gauge)

Nozzle Pressure (psi)	Nozzle Diameter (in.)*					Nozzle Pressure (psi)	Nozzle Diameter (in.)*				
	1¾	1⅞	2	2¼	2½		1¾	1⅞	2	2¼	2½
5	203	234	266	337	416	**62**	716	823	936	1187	1464
6	223	256	292	369	455	**64**	727	836	951	1206	1487
7	241	277	315	399	492	**66**	738	850	965	1224	1510
8	257	296	336	427	526	**68**	750	862	980	1242	1533
9	273	314	357	452	558	**70**	761	875	994	1260	1555
10	288	330	376	477	588	**72**	771	887	1008	1278	1577
12	315	362	412	522	644	**74**	782	900	1023	1296	1599
14	340	391	445	564	695	**76**	792	911	1036	1313	1620
16	364	418	475	603	744	**78**	803	924	1050	1330	1642
18	386	444	504	640	789	**80**	813	935	1063	1347	1663
20	407	468	532	674	831	**82**	823	946	1076	1364	1683
22	427	490	557	707	872	**84**	833	959	1089	1380	1704
24	446	512	582	739	911	**86**	843	970	1102	1396	1724
26	464	533	606	769	948	**88**	853	981	1115	1412	1744
28	481	554	629	799	984	**90**	862	992	1128	1429	1763
30	498	572	651	826	1018	**92**	872	1002	1140	1445	1783
32	514	591	673	854	1051	**94**	881	1012	1152	1460	1802
34	530	610	693	880	1084	**96**	890	1022	1164	1476	1821
36	546	627	713	905	1115	**98**	900	1032	1176	1491	1840
38	561	645	733	930	1146	**100**	909	1043	1189	1506	1859
40	575	661	752	954	1176	**105**	932	1070	1218	1542	1905
42	589	678	770	978	1205	**110**	954	1095	1247	1579	1950
44	603	694	788	1000	1233	**115**	975	1120	1275	1615	1993
46	617	710	806	1021	1261	**120**	996	1144	1303	1649	2036
48	630	725	824	1043	1288	**125**	1016	1168	1329	1683	2078
50	643	740	841	1065	1314	**130**	1036	1191	1356	1717	2119
52	656	754	857	1087	1340	**135**	1056	1213	1382	1750	2160
54	668	769	873	1108	1366	**140**	1076	1235	1407	1780	2199
56	680	782	889	1129	1391	**145**	1095	1257	1432	1812	2238
58	692	796	905	1149	1416	**150**	1114	1279	1456	1843	2277
60	704	810	920	1166	1440						

Note: 1 mm = 0.03937 in.; 1 kPa = 0.1450 psi; 1 gpm = 3.785 L/min.
*Assumed coefficient of discharge = 0.995, 0.996, 0.997, 0.997, 0.997.

Copyright National Fire Protection Association
Provided by IHS under license with NFPA
No reproduction or networking permitted without license from IHS
Not for Resale

Table B.3(e) Nozzle Factors

Diameter of the Nozzle (in.)	Factors *(F)*	
	Freshwater	Saltwater (Seawater)
2	119	117
2¼	150	148
2½	186	183
2¾	225	222
3	267	264
3¼	314	310
3½	364	359
3¾	418	413
4	476	470
4¼	537	530
4½	602	594
4¾	671	662
5	743	734
6	1070	1057

Note: 1 mm = 0.03937 in.

B.5 Effect of Altitude. When drafting water, the pump produces a partial vacuum in the suction hose, and the atmospheric pressure on the surface of the water forces water into the suction hose and the pump. As the elevation above sea level of the pumping site increases, the atmospheric pressure decreases. The loss of lift at various elevations is given in Table B.5.

The data in Table B.5 assume that the engine of the apparatus is adequate at all elevations. However, the available power for driving a pump from naturally aspirated gasoline engines decreases about 4 percent (up to 3 percent for diesel engines that are naturally aspirated) for each 1000 ft (305 m) of elevation. Therefore, a gasoline engine that was just adequate at sea level would be about 35 percent deficient at a 7000 ft (2135 m) altitude.

A difference in atmospheric pressure due to weather conditions will have the same result as a change in altitude. The difference in atmospheric pressure due to operation on a rainy day instead of a cool, clear day could easily mean a 1 ft (0.3 m) difference in lift.

Table B.5 Loss of Lift at Various Elevations

Elevation Above Sea Level		Loss of Lift (Water)	
ft	m	ft	m
1000	305	1.22	0.37
2000	610	2.38	0.73
3000	915	3.50	1.07
4000	1220	4.75	1.45
5000	1525	5.80	1.77
6000	1830	6.80	2.07
7000	2135	7.70	2.35

Annex C Developing a Preventive Maintenance Program

This annex is not a part of the requirements of this NFPA document but is included for informational purposes only.

C.1 General. Fire apparatus are increasingly complex pieces of machinery that require regular preventive maintenance to keep them safe and reliable and to maximize their life and value. It is not enough just to repair problems when they occur or to perform maintenance when it is convenient or someone thinks to have it done. In order to keep a fleet of fire apparatus in good condition, a good plan is necessary to ensure that all the required maintenance is performed.

Fire departments vary widely in their character, and thus in their requirements of a preventive maintenance program. At one end might be a small rural volunteer fire department with two pieces of apparatus and five runs per month. At the other end might be a large city with several hundred pieces of apparatus, each of which makes 10 or more runs per day. While the specifics of the preventive maintenance program for each department will be different, the goals in each should be to ensure that all the necessary preventive maintenance is performed to make certain that the apparatus is ready and safe for responding to an emergency when needed. It is important that each department develop a program appropriate for its apparatus, circumstances, resources, capabilities, and special circumstances.

This annex is designed to provide some guidance to a fire department in developing a plan to ensure that the preventive maintenance program performs all the necessary work needed to keep the apparatus in top condition.

Many departments already have a very effective preventive maintenance program in place. If the existing program works for the department and meets the requirements of this standard, then no changes are needed. If a department does not have a program in place, or their program is not meeting the requirements of this standard, then this annex can help guide the department through the process of setting up an effective preventive maintenance program.

C.2 Resources. Part of preparing a preventive maintenance program is to identify the resources that are available for maintenance and testing. A large city department might have extensive resources in a fire department or city public works shop. Even in such a department, some work, such as transmission overhauls and body work, might be sent to outside service facilities. The fire fighters and driver/operators who operate the equipment on a regular basis can, in most cases, perform daily or weekly operational checks.

In many areas of the country there are businesses that specialize in servicing fire apparatus. There are also businesses and organizations that specialize in testing fire apparatus, especially specific components, such as aerial devices and pumps. Many fire apparatus dealers and manufacturers have personnel qualified to perform many service tasks. These services often can be performed in the fire station with mobile service trucks. Qualified personnel who perform service on other types of heavy trucks can perform many types of service on fire apparatus, especially on components common with heavy trucks, such as drivetrains and suspensions. Many departments, especially volunteer departments, might find that they have personnel in the department who are qualified to do some of the required maintenance. These resources can be used to perform some of the maintenance and reduce costs.

Copyright National Fire Protection Association
Provided by IHS under license with NFPA
No reproduction or networking permitted without license from IHS
Not for Resale

It is helpful to identify not only the resources that will perform routine preventive maintenance and testing but also resources to perform emergency repairs. If such resources are not available within the fire department or city public works shop, these resources should be identified in advance, including establishing financial arrangements and 24-hour contact information, if possible. Services that should be included are as follows:

(1) Towing
(2) Tire service or replacement
(3) Provision of fuel and lubricants
(4) Repair of engine and drivetrain problems
(5) Repair of pump or plumbing problems
(6) Repair of fire service components, such as rescue tools
(7) Supplying replacement hose, tools, gear, and equipment damaged at an incident

In any case, it is up to the department and the AHJ to determine that the persons and facilities selected for maintenance and testing are qualified for the work they perform. Section 4.3 provides some requirements on the qualification of personnel.

C.3 Form and Format. The information needed for an effective preventive maintenance program can take many forms. It is important that the information is easy to keep updated as apparatus is replaced, and that it is easy for the fire department and the maintenance providers to use. Typically there are two types of information needed when establishing the preventive maintenance program. The first is when maintenance is needed, and the second is what maintenance tasks should be performed and, if necessary, how they should be performed.

Scheduled preventive maintenance activities are typically based on time (every 3 months, every 6 months, annually, and every 5 years) or a specified number of hours of operation.

Small departments might want to prepare a list, by month, of which apparatus is due for service and which service is to be performed at that time. It is important that the schedule be updated whenever a piece of apparatus is added or removed. Larger departments might find it more functional to prepare a schedule by month or by number of hours for each piece of apparatus.

There are many software programs available to assist in tracking maintenance schedules. Some vehicle record systems might even be available as a free download.

Operational checks that are to be performed at the start of each day, shift, or week are usually best documented with a check sheet to be used by the station crew. An example check sheet is shown in Figure C.3(a). It should be adapted for each specific piece of apparatus.

The documentation of which maintenance tasks should be performed at other intervals might be done in many ways. Simple tasks might be listed on the schedule. More extensive lists of tasks are often best put into a check sheet that the technician can use during the inspection and servicing process. An example of such a check sheet is shown in Figure C.3(b). This is just an example that must be customized to meet the requirements for specific apparatus and department policies.

The performance testing described in Chapters 16 through 23 of this standard should be included in the maintenance schedule. The details of how to perform the testing, and the information that is to be collected, are detailed in those chapters. Figure C.3(c) is a form that can be used to record the performance test results for a fire pump or industrial supply pump. Figure C.3(d) is a form that can be used to record the inspection and performance test results for an aerial device. Figure C.3(e) is a form that can be used to record the performance test results for the low voltage electrical system on the fire apparatus, and Figure C.3(f) is a form that can be used to record the performance test results for a line voltage electrical system. Figure C.3(g) is a form that can be used to record the performance test results for a foam proportioning system and, if the apparatus also has a CAFS compressor system, Figure C.3(h) is the form for recording the performance test results for that system.

C.4 Establishing the Program. The preventive maintenance program for any specific piece of apparatus, or for a department, needs to include requirements from several sources.

The first place to look is in the manufacturer's manuals. If the manuals that should have been delivered with the apparatus when it was new are not available, contact the original manufacturer to determine if duplicates are available. Even if the full vehicle manuals are not available, maintenance recommendations for specific components, such as engines, transmissions, axles, pumps, and generators, can be obtained from their manufacturers. The documentation should be carefully reviewed for recommendations for inspections, lubrication, replacing parts, testing, or other periodic maintenance tasks. These manuals also might be the source for specifications needed for confirming proper operation in the performance testing.

The second place to look is in the requirements of this standard. In many cases, there will be significant overlap with the recommendations in the manufacturer's manuals. There will be some requirements in this standard that do not apply to a specific piece of apparatus. All applicable requirements from this standard should be included in the program as it is established.

As the various maintenance tasks that need to be performed are identified, each should be assigned to a schedule based on months, years, hours, or some other time frame that will determine when it is to be performed. Those who will perform the maintenance task should also be identified. In the case of a large fire department or city public works shops, this is simple. In other cases, different providers might perform different types of tasks. A department might have several providers that can perform the same type of work, with the decision of which provider to use being made based on any of several criteria.

Once the tasks to be performed, their required frequency, and who will perform the work have been identified, the preventive maintenance program can be organized into a series of schedules, check sheets, record sheets, and other documentation that will ensure that the program will be implemented correctly. If the entire program is being developed from scratch, it might be necessary to develop the program and then revise it as experience demonstrates which elements work smoothly and which do not.

C.5 Record Maintenance. The check sheets and other maintenance records should be kept for the life of the apparatus. Part of setting up a preventive maintenance program is creating a filing system or other mechanism for retaining records. All records should be maintained by vehicle so that they can be delivered with the apparatus when it is sold. In many cases, problems can only be detected by comparing current test results with previous test results. For these problems to be detected, it is important that the records be well organized and available for future review. In the event of an accident, the accident investigation will include a review of all maintenance records.

--`,,```,,,,````-`-`,,`,,`,`,,`---

Copyright National Fire Protection Association
Provided by IHS under license with NFPA
No reproduction or networking permitted without license from IHS

Not for Resale

DAILY/WEEKLY WALK-AROUND CHECK FOR MOBILE FIRE APPARATUS

Fire department name _____ Date _____

Apparatus no. _____ Station no. _____

Start mileage _____ End mileage _____ Start engine hours _____ End engine hours _____

Inspectors: Mon _____ Tue _____ Wed _____ Thur _____ Fri _____ Sat _____ Sun _____

Legend: X = OK R = Repair required (requires a comment regarding problem)
NA = Not applicable C = Corrected

OPERATIONS	Mon	Tue	Wed	Thur	Fri	Sat	Sun
Engine							
1. Check engine oil and transmission level.							
2. Check engine coolant level.							
3. Check for integrity of frame and suspension.							
4. Check power steering fluid.							
Outside							
1. Check for fluid leaks under vehicle.							
2. Check steering shafts and linkages.							
3. Check wheels and lug nuts.							
4. Check tire condition.							
5. Check tire air pressure.							
Cab							
1. Check seats and seat belts.							
2. Start engine, check all gauges.							
3. Check windshield wipers.							
4. Check rear view mirror adjustment and operation.							
5. Check horn.							
6. Check steering shafts.							
7. Check cab glass and mirrors.							
Body							
1. Check steps and running boards.							
2. Check body condition.							
3. Check grab handles.							
Electric							
1. Check battery voltage and charging system voltage.							
2. Check line voltage system.							
3. Check all lights (ICC and warning).							

© 2007 National Fire Protection Association NFPA 1911 (p. 1 of 2)

FIGURE C.3(a) Daily/Weekly Apparatus Check Form.

Copyright National Fire Protection Association
Provided by IHS under license with NFPA
No reproduction or networking permitted without license from IHS
Not for Resale

OPERATIONS	Mon	Tue	Wed	Thur	Fri	Sat	Sun
Brakes							
1. Check air system for proper air pressure.							
2. Check parking brake.							
3. Check hydraulic brake fluid level.							
Pump							
1. Operate pump, check pump panel engine gauges.							
2. Check pump for pressure operation.							
3. Check discharge relief or pressure governor operation.							
4. Check all pump drain valves.							
5. Check all discharge and intake valve operation.							
6. Check pump and tank for water leaks.							
7. Check all valve bleeder/drain operation.							
8. Check primer pump operation.							
9. Check system vacuum hold.							
10. Check water tank level indicator.							
11. Check primer oil level (if applicable).							
12. Check transfer valve operation (if equipped).							
13. Check booster reel operation (if equipped).							
14. Check all pump pressure gauge operation.							
15. Check all cooler valves.							
16. Check for oil leaks in pump area.							
Aerial							
1. Operate aerial hydraulics.							
2. Check aerial outrigger operation.							
3. Check aerial operation.							
4. Check aerial hydraulic fluid level.							
5. Visually inspect aerial structure.							

Comments _____

© 2007 National Fire Protection Association NFPA 1911 (p. 2 of 2)

FIGURE C.3(a) ***Continued***

Copyright National Fire Protection Association
Provided by IHS under license with NFPA
No reproduction or networking permitted without license from IHS
Not for Resale

QUARTERLY/ANNUAL MOBILE FIRE APPARATUS INSPECTION REPORT

Inspection date _____

Fire department _____ Apparatus no. _____

Apparatus

Manufacturer _____

Model _____

Serial no. _____

Hourmeter _____

Chassis

Make _____

Model _____

VIN _____

Odometer _____

Legend:
X = Acceptable visually, checked R = Requires repair or adjustment
U = Unsafe condition requires repair prior to use C = Corrected NA = Not applicable

CHASSIS INSPECTION

Engine and Cooling Systems

_____ Oil level and condition
_____ Oil leaks
_____ Coolant level
_____ Antifreeze protection
_____ Coolant additive level
_____ Fuel system for leaks
_____ Fuel system plumbing condition
_____ Power steering fluid level
_____ Power steering pump and plumbing
_____ Coolant hose condition and leaks
_____ Alternator mounting brackets
_____ Alternator connections
_____ Charging system output _____ volts
_____ Auxiliary cooler connections
_____ Battery condition and hold downs
_____ Battery cables and clamps
_____ Battery fluid level
_____ Battery terminal voltage _____ volts
_____ Chassis grounds and connections
_____ Starter motor cable condition
_____ Starter motor operation
_____ Fan mounting bolts and adjustment
_____ Fan shroud clearance and condition
_____ Fan clutch or shutters operation
_____ Air filter element condition
_____ Air intake tubes and hoses
_____ All belts condition and adjustment
_____ After-cooler or intercooler tubes and hoses
_____ Motor mount condition
_____ Radiator cap pressure

Comments on engine and cooling systems inspection _____

_____

_____

_____

_____

© 2007 National Fire Protection Association

FIGURE C.3(b) Quarterly/Annual Apparatus Inspection Report.

Copyright National Fire Protection Association
Provided by IHS under license with NFPA
No reproduction or networking permitted without license from IHS
Not for Resale

Chassis and Components

Fluid levels

_____ Lubricate chassis

_____ All fluid levels

Steering

_____ Steering linkage and tie rods

_____ Steering box mounting

_____ Steering system plumbing for leaks

_____ Manual steering box fluid level

Transmission

_____ Auto trans fluid level

_____ Auto trans mounting and condition

_____ Auto trans and plumbing for leaks

_____ Auto trans lockup system

_____ Manual trans oil level

_____ Manual trans mounting

_____ Manual trans for leaks

Fuel

_____ Fuel tank and plumbing for leaks

_____ Fuel tank mounting

Tires/Wheels

_____ Tire and wheel conditions

_____ Lug nuts for torque

_____ Tire tread depth Front _____ Rear _____

_____ Tire air pressure Front _____ Rear _____

Driveline

_____ Driveline U-joints and yokes

_____ Driveline carrier bearings

_____ Differential oil level and leaks

Front axle

_____ Front spring and shock condition

_____ Front wheel bearings and king pins

Rear axle

_____ Rear spring condition

_____ Rear spring torque tubes and shocks

_____ Axle flanges for leaks and tightness

_____ Frame rails and cross members

Brakes

_____ Brake condition (amount of material)

_____ Brake adjustment and operation

_____ Air brake valves and tanks

_____ Lubricate brake pedal pivot pin

_____ Drain air tanks and check air dryer

_____ Air brake lines and chambers

_____ Air brake leaks and buildup

_____ Hydraulic brakes for leaks

_____ Hydraulic brake components

_____ Hydro-vac operation and mounting

_____ Parking brake operation

Exhaust system

_____ Exhaust system and muffler

Comments on chassis and components inspection _____

_____

_____

_____

_____

© 2007 National Fire Protection Association

FIGURE C.3(b) ***Continued***

--`,,```,,,,````-`-`,,`,,`,`,,`---

Copyright National Fire Protection Association
Provided by IHS under license with NFPA
No reproduction or networking permitted without license from IHS
Not for Resale

Cab and Body

Cab

_____ Cab mounting and tilt mechanism
_____ Cab frame and sheet metal
_____ Cab hoist motor solenoid volt drop _____ volts
_____ Door mounting and latches
_____ Cab glass condition
_____ Cab seat condition and mounting
_____ Seat belt condition and mounting
_____ Steering wheel mounting and alignment
_____ Horn operation
_____ Heater and defroster operation
_____ Throttle controls and linkage
_____ Window operation
_____ Auto transmission shift controls
_____ Manual transmission shift controls
_____ Clutch pedal linkage
_____ Clutch pedal free play
_____ Windshield wipers and washers
_____ Mirror condition and mounting

Body

_____ Compartment door latches
_____ Compartment door and hinge condition
_____ Body compartment condition
_____ Step and auxiliary equipment condition

Comments on cab and body inspection _____

Cab and Body Electrical

_____ Headlights and high beams
_____ Parking and clearance lights
_____ Tail and stop lights
_____ Backup lights and alarm
_____ Turn signal and hazard operation
_____ Cab spot lights operation
_____ Auxiliary light operation
_____ Front warning lights
_____ Rear warning lights
_____ Front beacon lights
_____ Intersection warning lights
_____ Body deck lights
_____ Compartment lights
_____ Siren operation and mounting
_____ Siren solenoid voltage drop _____ volts
_____ Voltage drops of all solenoids

List solenoids and voltage drop below

Solenoid	Voltage Drop

Comments on cab and body electrical inspection _____

© 2007 National Fire Protection Association

FIGURE C.3(b) ***Continued***

Copyright National Fire Protection Association
Provided by IHS under license with NFPA
No reproduction or networking permitted without license from IHS
Not for Resale

Line Voltage Inspection

_____ Power source
_____ Generator drive engine or power drivetrain
_____ Cord reels and receptacles
_____ Electrically-driven equipment
_____ Electrical controls
_____ Output voltage _____ volts
_____ Output frequency _____ Hz

Comments on line voltage electrical inspection _____

Road and Operational Test

_____ Engine oil pressure
_____ Engine coolant temperature
_____ Tachometer operation
_____ Auto transmission shifting
_____ Clutch release and operation
_____ Manual transmission shifting
_____ Brake operation
_____ Drive line vibration
_____ Air compressor operation
_____ Air compressor governor setting
_____ Speedometer operation
_____ Shimmy or front end noises
_____ Clutch fan or shutter operation

Comments on road and operational test _____

PUMP AND WATER TANK INSPECTION

Pump manufacturer _____ Model _____ S/N _____
Pump location _____ Pump hours _____ Capacity _____

_____ Pump shift and indicator lights
_____ Automatic transmission lockup system
_____ Clutch disengagement and manual transmission
_____ Pump transmission shift cylinders or motor
_____ Pump transmission oil level and condition
_____ Pump panel tachometer and engine gauges
_____ Engine speed counter
_____ Pump panel electrical switches and panel light
_____ Master gauges for accuracy and operation
_____ Discharge gauges for accuracy and operation
_____ Water tank indicator system
_____ Pump

© 2007 National Fire Protection Association

FIGURE C.3(b) ***Continued***

Copyright National Fire Protection Association
Provided by IHS under license with NFPA
No reproduction or networking permitted without license from IHS
Not for Resale

_____ Pump plumbing
_____ High pressure pump system
_____ Pressure control device operation and response time
_____ Transfer valve operation
_____ Intake relief operation
_____ Primer operation
_____ Dry vacuum test
Initial reading _____ in. vacuum
Leakage in 5 minutes _____ in. vacuum
_____ Primer motor solenoid voltage drop _____ volts
_____ Pump packing — adjust if necessary
_____ Mechanical seals for leaks
_____ Discharge and intake valves
_____ Valves, linkage, remote rods, and pivot points
_____ Drain valves
_____ Tank-to-pump and tank fill valves
_____ Auxiliary cooler
_____ Suction strainer
_____ Preconnect valves and plumbing
_____ Deck gun valve and plumbing
_____ Front or rear suction valves and plumbing and valves
_____ Auto-lube level and fluid condition
_____ Water tank mounting and integrity
_____ Booster reel mounting and operation
_____ Anodes in tank and pump
_____ Reel motor solenoid voltage drop _____ volts
_____ Pump mounting integrity
_____ Pump driveline U-joints, yokes and flanges

Comments on pump and tank inspection _____

FOAM PROPORTIONING SYSTEM INSPECTION

Foam system manufacturer _____ Model _____ S/N _____

_____ Instrumentation, gauges, and controls
_____ Strainer or filter
_____ Foam concentrate pump
_____ Lubricant level and condition
_____ Hydraulic pump
_____ Hydraulic system
_____ Hydraulic fluid tank mounting and integrity
_____ Foam concentrate tank mounting and integrity
_____ Foam eductor system, metering, and check valve

Comments on foam proportioning system inspection _____

© 2007 National Fire Protection Association

FIGURE C.3(b) ***Continued***

Copyright National Fire Protection Association
Provided by IHS under license with NFPA
No reproduction or networking permitted without license from IHS
Not for Resale

AERIAL DEVICE INSPECTION

Aerial manufacturer _____ Model _____ S/N _____

Aerial hours _____ Rated capacity _____

Hydraulic Systems

Turntable

_____ Rotation gear reduction box
_____ Rotation hydraulic swivel
_____ Lines and hoses
_____ Control valve

Chassis

_____ Hydraulic tank
_____ Hydraulic fluid levels
_____ Hydraulic fluid sample
_____ PTO
_____ Hydraulic pump
_____ Auxiliary power pump
_____ Lines and hoses

Stabilizer

_____ Cylinders
_____ Control valve
_____ Lines and hoses
_____ Diverter valve

Aerial

_____ Elevation cylinder
_____ Extension cylinder
_____ Lines and hoses
_____ Tip controls

Platform

_____ Control valve
_____ Leveling cylinders
_____ Lines and hoses

Structural Fasteners

_____ Turntable mounting bolts
_____ Torque box mounting to frame bolts
_____ Suspension system bolts

Tractor Drawn Components

_____ Mounting to frame bolts
_____ Rotation gear reduction box mounting bolts
_____ Boom support/ladder cradle mounting bolts

Stabilizer

_____ Mounting to frame or torque box
_____ Mounting bolts

Lubrication

_____ Sheaves
_____ Cables
_____ Ladder section base rails
_____ Ladder heel pin
_____ Rotation gear and bearing
_____ Rotation gear reduction box
_____ Elevation cylinder pins
_____ Extension cylinder pins
_____ Stabilizer extension cylinder pins
_____ Aerial waterway pipe sections

Indicators

_____ Rung alignment
_____ PTO engaged
_____ Aerial alignment
_____ Turntable alignment
_____ Elevation
_____ Extension
_____ Turntable level

Turntable Components

_____ Safety signs
_____ Communication system
_____ Emergency hydraulic power
_____ Interlock systems
_____ Electrical lines

© 2007 National Fire Protection Association NFPA 1911 (p. 6 of 7)

FIGURE C.3(b) ***Continued***

Copyright National Fire Protection Association
Provided by IHS under license with NFPA
No reproduction or networking permitted without license from IHS
Not for Resale

Aerial Components

_____ Gore tube
_____ Waterway
_____ Sheaves
_____ Pinable waterway
_____ Rung covers
_____ Breathing air
_____ Wear strips

Stabilizers Components

_____ Lights
_____ Pads
_____ Interlocks
_____ Safety pins

Comments on aerial device inspection _____

_____

_____

_____

_____

Inspector _____ Date _____

AHJ representative _____ Date _____

© 2007 National Fire Protection Association

FIGURE C.3(b) ***Continued***

Copyright National Fire Protection Association
Provided by IHS under license with NFPA
No reproduction or networking permitted without license from IHS
Not for Resale

PUMP PERFORMANCE TEST

Apparatus number or designation _____ Year manufactured _____
Manufacturer _____ Model _____
Serial no. _____ Vehicle identification no. _____
Engine make _____ Model _____
Pump make _____ Model _____
Pump rated capacity _____ (gpm) (L/min) at _____ (psi) (kPa)
Speed check taken from _____ Ratio to engine _____
Test site location _____
Tests performed from ❑ Draft ❑ Hydrant
Suction hose size _____ (in.) (mm) Length _____ (ft) (m)

	At start of tests	At end of tests
Atmospheric pressure		
Air temperature		
Water temperature		
Elevation of test site		
Lift		

Governed engine speed _____ Actual maximum engine speed _____
Verify operation of pump shift indicator _____
Verify operation of pump engine control interlock at pump operator's panel _____
Maximum vacuum attained _____ Vacuum drop in 5 minutes _____
Time to prime pump _____
Pressure control device test:
Rise while pumping capacity at 150 psi _____
Rise while pumping capacity at 90 psi _____
Rise while pumping 50 percent capacity at 250 psi _____
Intake relief valve test results _____
Tank to pump water flow test _____ (gpm) (L/min)
Gauge accuracy _____ Flowmeter accuracy _____

Pump Test Results

	Capacity test	Overload test	200 psi test	250 psi test
Duration				
Average nozzle pressure				
Corrected pressure				
Gallons per minute				
Average pump pressure				
rpm—engine				
rpm—pump				

Comments _____

© 2007 National Fire Protection Association

FIGURE C.3(c) Pump Performance Test Form.

Copyright National Fire Protection Association
Provided by IHS under license with NFPA
No reproduction or networking permitted without license from IHS
Not for Resale

20 Minute Capacity Test

Layout _____ Nozzle size _____ Position of transfer valve _____

								Pump Intake		Pump Discharge		
Time	Counter (if used)	rpm	Tach	Engine Temperature	Oil Pressure	Voltage	Automatic Transmission Temp (if equipped)	Apparatus gauge	Test gauge	Apparatus gauge	Test gauge	Pitot/ Flow

5 Minute Overload Test

Layout _____ Nozzle size _____ Position of transfer valve _____

10 Minute 200 psi Test

Layout _____ Nozzle size _____ Position of transfer valve _____

10 Minute 250 psi Test

Layout _____ Nozzle size _____ Position of transfer valve _____

Person conducting the test _____

Representing _____

Signature _____ Date _____

AHJ representative _____ Date _____

© 2007 National Fire Protection Association

FIGURE C.3(c) ***Continued***

Copyright National Fire Protection Association
Provided by IHS under license with NFPA
No reproduction or networking permitted without license from IHS
Not for Resale

AERIAL DEVICE INSPECTION AND PERFORMANCE TEST

Apparatus no. or designation _____ Year manufactured _____

Manufacturer _____ Model _____

Serial no. _____ Vehicle identification no. _____

Engine make _____ Model _____

Aerial device manufacturer _____ Model _____

Serial no. of aerial device _____ Rated vertical height _____

Type of aerial device ❑ Aerial ladder ❑ Elevating platform ❑ Water tower

Apparatus miles _____ Apparatus hours _____ Aerial hours _____

Reason for test _____

_____

Test location _____

Weather conditions at time of test _____

Temperature _____ (°F) (°C) Wind velocity (estimate) _____ (mph) (km/hr)

Visual Inspection (attach copy of any checklist)

Comments _____

_____

_____

_____

_____

Disposition of any problems _____

_____

_____

Operational Inspection

Comments _____

_____

_____

_____

_____

Disposition of any problems _____

_____

_____

© 2007 National Fire Protection Association

FIGURE C.3(d) Aerial Device Inspection and Performance Test Form.

Copyright National Fire Protection Association
Provided by IHS under license with NFPA
No reproduction or networking permitted without license from IHS
Not for Resale

Load Test

Total weight used _____

Comments _____

_____

_____

_____

_____

Disposition of any problems _____

_____

_____

Water System Test

Comments _____

_____

_____

_____

_____

Disposition of any problems _____

_____

_____

Person conducting the inspection and test _____

Representing _____

Signature _____ Date _____

AHJ representative _____ Date _____

© 2007 National Fire Protection Association

FIGURE C.3(d) ***Continued***

Copyright National Fire Protection Association
Provided by IHS under license with NFPA
No reproduction or networking permitted without license from IHS
Not for Resale

LOW VOLTAGE ELECTRICAL SYSTEM PERFORMANCE TEST

Apparatus no. or designation _____ Year manufactured _____

Manufacturer _____ Serial no. _____

Number of batteries _____ Voltage _____

Battery manufacturer _____ Size/model _____

Battery Tests

Battery rated CCA _____ Open circuit voltage(s) before testing _____

Conductivity test results: CCA value(s) _____ ❑ Pass ❑ Fail

or

Load test results: Test current _____ Battery temperature _____ °F (°C)

Minimum allowed voltage _____

Terminal voltage(s) _____ ❑ Pass ❑ Fail

Starter Wiring Test

Voltage drop in positive (+) lead _____ ❑ Pass ❑ Fail

Voltage drop in negative (–) lead _____ ❑ Pass ❑ Fail

Alternator Test

Alternator manufacturer _____ Model _____

Alternator nameplate rating _____

Alternator test output _____ ❑ Pass ❑ Fail

Voltage drop in positive (+) lead _____ ❑ Pass ❑ Fail

Voltage drop in negative (–) lead _____ ❑ Pass ❑ Fail

Regulator Test

Regulator temperature _____

Regulator voltage, minimum load _____ ❑ Pass ❑ Fail

Regulator voltage, loaded _____ ❑ Pass ❑ Fail

Battery Charger/Conditioner Test

Rated output _____ Test output _____ ❑ Pass ❑ Fail

Float voltage _____ ❑ Pass ❑ Fail

Total Continuous Load Test

Battery voltage at start of test _____

Battery voltage at end of test _____ ❑ Pass ❑ Fail

© 2007 National Fire Protection Association NFPA 1911 (p. 1 of 2)

FIGURE C.3(e) Low Voltage Electrical System Performance Test Form.

Copyright National Fire Protection Association
Provided by IHS under license with NFPA
No reproduction or networking permitted without license from IHS
Not for Resale

Solenoid and Power Relay Test

Device tested _____ Voltage drop _____ ❑ Pass ❑ Fail
Device tested _____ Voltage drop _____ ❑ Pass ❑ Fail
Device tested _____ Voltage drop _____ ❑ Pass ❑ Fail
Device tested _____ Voltage drop _____ ❑ Pass ❑ Fail
Device tested _____ Voltage drop _____ ❑ Pass ❑ Fail
Device tested _____ Voltage drop _____ ❑ Pass ❑ Fail
Device tested _____ Voltage drop _____ ❑ Pass ❑ Fail
Device tested _____ Voltage drop _____ ❑ Pass ❑ Fail
Device tested _____ Voltage drop _____ ❑ Pass ❑ Fail
Device tested _____ Voltage drop _____ ❑ Pass ❑ Fail
Device tested _____ Voltage drop _____ ❑ Pass ❑ Fail
Device tested _____ Voltage drop _____ ❑ Pass ❑ Fail

Comments on low voltage electrical system performance test _____

Person conducting the test _____
Representing _____

Signature _____ Date _____
AHJ representative _____ Date _____

© 2007 National Fire Protection Association

FIGURE C.3(e) ***Continued***

--`,,```,,,,````-`-`,,`,,`,`,,`---
Copyright National Fire Protection Association
Provided by IHS under license with NFPA
No reproduction or networking permitted without license from IHS
Not for Resale

LINE VOLTAGE ELECTRICAL SYSTEM PERFORMANCE TEST

Apparatus no. or designation _____ Year manufactured _____

Manufacturer _____ Serial no. _____

Power source type _____ Manufacturer _____

Model _____

Ratings — Volts _____ ac/dc _____ Phase _____ Frequency _____

Amps _____ Watts _____

Line voltage system is: ❑ Isolated ❑ Bonded neutral

Power Source Annual Load Test

Test load total wattage _____

Test Case	Voltage	Frequency
No load at start		
Loaded at start		
Loaded, 10 minutes		
Loaded at end		
No load at end		
Minimum allowed		
Maximum allowed		
	❑ Pass ❑ Fail	❑ Pass ❑ Fail

Receptable Wiring Tests

❑ Pass ❑ Fail Number of tests _____

Identify any problem receptacles _____

Comments _____

Ground Fault Circuit Interrupters (GFCIs)

❑ Pass ❑ Fail Number of GFCIs tested _____

Comments _____

© 2007 National Fire Protection Association

FIGURE C.3(f) Line Voltage Electrical System Performance Test Form.

Copyright National Fire Protection Association
Provided by IHS under license with NFPA
No reproduction or networking permitted without license from IHS
Not for Resale

Operational Tests of Line Voltage Equipment

❑ Pass ❑ Fail Describe any failures or problems _____

_____

Comments _____

_____

Power Source Full Load Test

Test load total wattage _____

Test Case	Voltage	Frequency
0% load at start		
50% load at start		
100% load, 0 minutes		
100% load, 10 minutes		
100% load, 20 minutes		
100% load, 30 minutes		
100% load, 40 minutes		
50% load at end		
0% load at end		
Minimum allowed	(–10%)	(–3Hz)
Maximum allowed	(+10%)	(+3Hz)
	❑ Pass ❑ Fail	❑ Pass ❑ Fail

Dielectric Withstand test

❑ Pass ❑ Fail ❑ Not applicable Comments _____

_____

Comments on line voltage electrical system performance test _____

_____

_____

_____

Person conducting the test _____

Representing _____

Signature _____ Date _____

AHJ representative _____ Date _____

© 2007 National Fire Protection Association

FIGURE C.3(f) ***Continued***

Copyright National Fire Protection Association
Provided by IHS under license with NFPA
No reproduction or networking permitted without license from IHS
Not for Resale

FOAM PROPORTIONING SYSTEM PERFORMANCE TEST

Apparatus no. or designation _____ Year manufactured _____

Manufacturer _____ Model _____

Serial no. _____ Vehicle identification no. _____

Foam proportioner make _____ Model _____

Foam proportioner type _____ Serial no. _____

Foam proportioner specifications:

Flow range	Min _____	Max _____
Pressure range	Min _____	Max _____
Percentage range	Min _____	Max _____
Foam concentrate viscosity	Min _____	Max _____
Power requirements	Min _____	Max _____

Test conditions: Proportioning ratio _____ Waterflow _____ Water Pressure _____

Test method used:

- ❑ Substituting water for foam concentrate
- ❑ Measuring foam concentrate pump output directly
- ❑ Determining foam percentage by use of a refractometer
- ❑ Determining foam percentage by use of a conductivity meter

Calibration accuracy _____ Within minimum requirements? ❑ Yes ❑ No

Comments on foam proportioning system performance test _____

_____

_____

_____

_____

_____

Tested by _____ Date _____

© 2007 National Fire Protection Association NFPA 1911 (p. 1 of 1)

FIGURE C.3(g) Foam Proportioning System Performance Test Form.

Copyright National Fire Protection Association
Provided by IHS under license with NFPA
No reproduction or networking permitted without license from IHS
Not for Resale

CAFS COMPRESSOR PERFORMANCE TEST

Apparatus no. or designation _____ Year manufactured _____

Manufacturer _____ Model _____

Serial no. _____ Vehicle identification no. _____

Compressor make _____ Model _____

Compressor rate capacity at 125 psi (862 kPa) _____ SCFM

Compressor drive ❑ Belt ❑ Engine ❑ PTO ❑ Hydraulic

If engine, make _____ Model _____

Test device _____ Airflow meter _____ Fixed orifice _____ (size)

Compressor Run Test

Time	Air Pressure	Airflow (SCFM)	Compressor Temperature
Start			
5 minutes			
10 minutes			
15 minutes			
20 minutes			

Maximum air pressure: psi _____

Pressure Balance Test

Time	Water Pressure	Air Pressure	Percent Difference
At test start			
With air flowing			
After 5 minutes			

Comments on CAFS compressor performance test _____

Tested by _____ Date _____

© 2007 National Fire Protection Association NFPA 1911 (p. 1 of 1)

FIGURE C.3(h) CAFS Compressor Performance Test Form.

Copyright National Fire Protection Association
Provided by IHS under license with NFPA
No reproduction or networking permitted without license from IHS
Not for Resale

There are many different types of forms for reporting inspections, maintenance, and tests that could be used in connection with a fire apparatus preventive maintenance program. Resources for forms other than those shown in this annex are the local or state fire apparatus mechanics association, apparatus manufacturers, or the Apparatus Maintenance Section of the International Association of Fire Chiefs.

Annex D Guidelines for First-Line and Reserve Fire Apparatus

This annex is not a part of the requirements of this NFPA document but is included for informational purposes only.

D.1 General. To maximize fire fighter capabilities and minimize risk of injuries, it is important that fire apparatus be equipped with the latest safety features and operating capabilities. In the last 10 to 15 years, much progress has been made in upgrading functional capabilities and improving the safety features of fire apparatus. Apparatus manufactured prior to 1991 usually included only a few of the safety upgrades required by the 1991 and subsequent editions of the NFPA fire department apparatus standards or the equivalent Underwriters' Laboratories of Canada (ULC) standards. Because the changes, upgrades, and fine tuning to NFPA 1901, *Standard for Automotive Fire Apparatus*, since 1991 have been truly significant, especially in the area of safety, fire departments should seriously consider the value (or risk) to fire fighters of keeping pre-1991 fire apparatus in first-line service.

The 1991 edition of the NFPA fire department apparatus standards included, among other provisions, requirements for fully enclosed driving and riding areas, auxiliary braking systems, reflective striping, improved warning lights, and prohibition of roof-mounted audible warning devices. The minimum tip load for an aerial ladder was set at 250 lb (114 kg), and other requirements, such as a minimum rail height, were added to make the aerial ladder safer for fire fighters to use. The 1991 editions have been recognized as the benchmark from which improved and safer fire apparatus have evolved. It is recommended that only apparatus that were designed and manufactured to meet the 1991 or later editions of the NFPA fire apparatus standards, or apparatus that have been refurbished in accordance with NFPA 1912, *Standard for Fire Apparatus Refurbishing*, to meet the 1991 or later editions of the NFPA fire apparatus standards, be permitted to operate in first-line service. This will ensure that, while the apparatus might not totally comply with the current edition of the automotive fire apparatus standards, many of the improvements and upgrades required by the standards since 1991 are available to the fire fighters who use the apparatus.

It is recommended that apparatus manufactured prior to 1991 that is less than 25 years old, that has been properly maintained, and that is still in serviceable condition should be placed in reserve status and upgraded to incorporate as many features as possible of the post-1991 fire apparatus *(see Section D.3)*. Apparatus that was not manufactured to the applicable NFPA fire apparatus standards or that is over 25 years old should be replaced.

D.2 How the Standards Have Changed. It is a generally accepted fact that fire apparatus, like all types of mechanical devices, have a finite life. The length of that life depends on many factors, including vehicle mileage and engine hours, quality of the preventative maintenance program, quality of the driver training program, whether the fire apparatus was used within the design parameters, whether the apparatus was manufactured on a custom or commercial chassis, quality of workmanship by the original manufacturer, quality of the components used, and availability of replacement parts, to name a few. In the fire service, there are fire apparatus with 8 to 10 years of service that are simply worn out. There are also fire apparatus that were manufactured with quality components, that have had excellent maintenance, and that have responded to a minimum number of incidents that are still in serviceable condition after 20 years. Most would agree that the care of fire apparatus while being used and the quality and timeliness of maintenance are perhaps the most significant factors in determining how well a fire apparatus ages.

Prior to 1991, the single fire department apparatus standard was NFPA 1901. It was basically a "reactive standard." If something worked well in field use for a few years, it might have been suggested for inclusion in NFPA 1901. It was a very basic standard. In the late 1980s, the Technical Committee on Fire Department Apparatus decided to become proactive and to greatly enhance the value of the standard for the fire service. Task groups were appointed to develop reasonable requirements for the various components that made up a fire apparatus, and a safety task group was charged with looking at issues across the board that would improve the safety of fire fighters who use the apparatus.

The completely revised 1991 edition of NFPA fire department apparatus standards was the result of these efforts and the full committee's strong desire to make the automotive fire apparatus standards not only more safety oriented but also more user friendly. In 1991, four standards were issued: NFPA 1901, *Standard for Pumper Fire Apparatus*; NFPA 1902, *Standard for Initial Attack Fire Apparatus*; NFPA 1903, *Standard for Mobile Water Supply Fire Apparatus*; and NFPA 1904, *Standard for Aerial Ladder and Elevating Platform Fire Apparatus*.

Contained within the 1991 editions of the fire department apparatus standards were requirements for such items as increased battery capacity to ensure starting under most conditions, intersection lights for increased visibility, removal of all roof-mounted audible warning devices to reduce hearing problems, a flashing light in the cab to warn if a cab or body door is open, a backup alarm, an automatic transmission to make it easier to drive (unless the purchaser has a specific reason for a manual transmission), fully enclosed riding areas with reduced noise (dBA) levels to keep crew members safe and informed, seats and seat belts for all crew members riding on the apparatus, fail-safe door handles so the sleeve of a coat does not inadvertently catch a handle and open a door, and signs requiring everyone to be seated and belted.

In the pump area, the standard specified that 3 in. (75 mm) or larger valves be "slow close," that caps on intakes and discharge outlets be tested to 500 psi (3400 kPa), that an intake relief valve be provided to help manage incoming pressure, that 30-degree sweep elbows be provided on the discharges to eliminate hose kinking, and that all 3 in. (75 mm) and larger discharges be eliminated from the pump panel to reduce the possibility of injuries to the pump operator.

Fire apparatus equipped with electronic or electric engine throttle controls were required to include an interlock system to prevent engine speed advancement, unless the chassis transmission is in neutral with the parking brake engaged or unless the parking brake is engaged, the fire pump is engaged, and the chassis transmission is in the correct pumping gear.

In the body area, the minimum step surface size and load-carrying capabilities were increased, handrails were required

Copyright National Fire Protection Association
Provided by IHS under license with NFPA
No reproduction or networking permitted without license from IHS
Not for Resale

to be slip resistant, and reflective striping was required on all four sides of the apparatus. Electrical system requirements for line voltage systems were added to include the use of listed components that were grounded.

Many requirements were added to increase the operating capabilities of all aerial devices. For aerial ladders, the minimum design strength of the rungs was increased, a height requirement for the handrails was specified, a minimum load-carrying requirement for folding steps was specified, and the aerial ladder had to have a minimum carrying capacity of 250 lb (114 kg) at the tip when the aerial ladder is at zero degrees elevation and maximum extension. Where a water tower is equipped with a ladder, the same requirements that applied to an aerial ladder were required of the ladder on the water tower.

The carrying capacity of elevating platforms at zero degrees elevation and maximum extension was raised to 750 lb (340 kg). Elevating platforms were also required to have handrails, breathing air available in the platform (with low-air warning capability) for at least two fire fighters, and a water curtain cooling system under the platform.

All aerial devices had to be capable of supporting a static load of one and one-half times their rated capacity in any position. A requirement for a stabilizer movement alarm and reflective striping with warning lights was added. Interlocks to prevent inadvertent movement to an unsupported side and to prevent raising the aerial device prior to the stabilizers being deployed were specified. One hundred percent nondestructive tests (NDT) became a requirement. All these requirements were included in the 1991 editions of the NFPA fire department apparatus standards.

In 1996, the four fire department apparatus standards (NFPA 1901, NFPA 1902, NFPA 1903, and NFPA 1904) were recombined into a single standard that was designated as NFPA 1901, *Standard for Automotive Fire Apparatus*. This edition further enhanced the safety and operating characteristics of all the apparatus.

The 1999 edition included chapters on quints and mobile foam apparatus, further defined slip resistance of stepping and walking surfaces, required better mounting of equipment in the driving and crew compartments, required predelivery testing of foam systems, and specified that fill stations for breathing air cylinders be designed to totally contain a rupturing cylinder.

The 2003 edition continued to refine the requirements in the driving and crew riding areas with increased head height requirements at seating positions and additional requirements for storage of SCBAs in seat backs, both aimed at reducing fire fighter injuries. The test protocol for slip resistance of standing and walking surfaces was better defined. There was a general cleanup of the requirements throughout the document to enhance the operational usefulness of the apparatus.

D.3 Upgrading Fire Apparatus. Any apparatus, whether in first-line or reserve service, should be upgraded in accordance with NFPA 1912 as necessary to ensure that the following features are included as a minimum:

(1) Fully enclosed seating is provided for all members riding on the fire apparatus.
(2) Warning lights meet or exceed the current standard.
(3) Reflective striping meets or exceeds the current standard.
(4) Slip resistance of walking surfaces and handrails meets the current standard.
(5) A low voltage electrical system load manager is installed if the total connected load exceeds the alternator output.
(6) The alternator output is capable of meeting the total continuous load on the low voltage electrical system.
(7) Where the gross vehicle weight rating (GVWR) is 36,000 lb (16,000 kg) or more, an auxiliary braking system is installed and operating correctly.
(8) Ground and step lighting meets or exceeds the current standard.
(9) Noise levels in the driving and crew compartment(s) meet the current standard, or appropriate hearing protection is provided.
(10) All horns and sirens are relocated to a position as low and as far forward as possible.
(11) Seat belts are available for every seat and are new or in serviceable condition.
(12) Signs are present stating no riding on open areas.
(13) A pump shift indicator system is present and working properly for vehicles equipped with an automatic chassis transmission.
(14) For vehicles equipped with electronic or electric engine throttle controls, an interlock system is present and working properly to prevent engine speed advancement at the operator's panel, unless the chassis transmission is in neutral with the parking brake engaged; or unless the parking brake is engaged, the fire pump is engaged, and the chassis transmission is in pumping gear.
(15) All loose equipment in the driving and crew areas is securely mounted to prevent its movement in case of an accident.

D.4 Proper Maintenance of Fire Apparatus. In addition to needed upgrades to older fire apparatus, it is imperative that all fire apparatus be checked and maintained regularly to ensure that they will be reliable and safe to use. The manufacturer's instructions should always be followed when maintaining the fire apparatus. Special attention should be paid to ensure that the following conditions exist, as they are particularly critical to maintaining a reliable unit:

(1) Engine belts, fuel lines, and filters have been replaced in accordance with the manufacturers' maintenance schedule(s).
(2) Brakes, brake lines, and wheel seals have been replaced or serviced in accordance with the manufacturers' maintenance schedule.
(3) Tires and suspension are in serviceable condition, and tires are not more than 7 years old.
(4) The radiator has been serviced in accordance with the manufacturer's maintenance schedule and all cooling system hose are new or in serviceable condition.
(5) The alternator output meets its rating.
(6) A complete weight analysis shows the fire apparatus is not over individual axle or total gross vehicle weight ratings.
(7) The fire pump meets or exceeds its original pump rating.
(8) The water tank and baffles are not corroded or distorted.
(9) If equipped with an aerial device, a complete test to original specifications has been conducted and certified by a certified testing laboratory.
(10) If so equipped, the generator and line voltage accessories have been tested and meet the current standard.

D.5 Refurbishing or Replacing Fire Apparatus. Fire department administrators and fire chiefs should exercise special care when evaluating the cost of refurbishing or updating an apparatus versus the cost of a new fire apparatus. Apparatus

Copyright National Fire Protection Association
Provided by IHS under license with NFPA
No reproduction or networking permitted without license from IHS
Not for Resale

that are refurbished should comply with the requirements of NFPA 1912. A thorough cost-benefit analysis of the value of upgrading or refurbishing a fire apparatus should be conducted. In many instances, it will be found that refurbishing costs will greatly exceed the current value of similar apparatus. Experience has also shown that refurbishing a fire apparatus that is over 20 years old, other than to paint or repair the apparatus, is a very poor investment.

Some factors to consider and evaluate when considering whether to refurbish or replace a fire apparatus include the following:

(1) What is the true condition of the existing apparatus? Has it been in a major accident, or has something else happened to it that would make spending significant money on it ill advised?
(2) Does the current apparatus meet the program needs of the area it is serving? Is it designed for the way the fire department operates today and is expected to operate into the foreseeable future, or is the apparatus functionally obsolete? Can it carry everything that is needed to do the job without being overloaded?
(3) If the apparatus is refurbished, will it provide the level of safety and operational capability of a new fire apparatus? Remember, in many cases, refurbishing does not mean increasing the GVWR, so it is not possible to add a larger water tank or additional foam agent tanks or to carry massive amounts of additional equipment. Enclosing personnel riding areas might add enough weight to the chassis that existing equipment loads need to be reduced to avoid overloading the chassis. An aerial ladder that does not have a 250 lb (114 kg) tip load rating at zero degrees elevation and maximum extension cannot be made stronger.
(4) What is the anticipated cost per year to operate the apparatus if it were refurbished, and what would the cost per year be for a new apparatus? Do not forget insurance costs, downtime costs, maintenance costs, depreciation, reliability, and the safety of the users and the public. At what rate are those costs rising each year? Are parts still readily available for all the components on the apparatus? A refurbished 15-year–old apparatus still has 15-year–old parts in it. How long could the fire department operate without the apparatus if it suddenly needed major repairs?
(5) Is there a current trade-in value that will be gone tomorrow? Most apparatus over 12 years old have little trade-in value. Are there creative financing plans or leasing options that can provide a new fire apparatus for little more than the cost of refurbishing or maintaining an older apparatus?

D.6 Conclusion. A fire apparatus is an emergency vehicle that must be relied on to transport fire fighters safely to and from an incident and to operate reliably and properly to support the mission of the fire department. A piece of fire apparatus that breaks down at any time during an emergency operation not only compromises the success of the operation but might jeopardize the safety of the fire fighters relying on that apparatus to support their role in the operation. An old, worn out, or poorly maintained fire apparatus has no role in providing emergency services to a community.

Annex E Informational References

E.1 Referenced Publications. The documents or portions thereof listed in this annex are referenced within the informational sections of this standard and are not part of the requirements of this document unless also listed in Chapter 2 for other reasons.

E.1.1 NFPA Publications. National Fire Protection Association, 1 Batterymarch Park, Quincy, MA 02169-7471.

NFPA 11, *Standard for Low-, Medium-, and High-Expansion Foam*, 2005 edition.

NFPA 1002, *Standard for Fire Apparatus Driver/Operator Professional Qualifications*, 2003 edition.

NFPA 1150, *Standard on Foam Chemicals for Fires in Class A Fuels*, 2004 edition.

NFPA 1901, *Standard for Automotive Fire Apparatus*, 2003 edition.

NFPA 1912, *Standard for Fire Apparatus Refurbishing*, 2006 edition.

NFPA 1961, *Standard on Fire Hose*, 2007 edition.

NFPA 1962, *Standard for the Inspection, Care, and Use of Fire Hose, Couplings, and Nozzles and the Service Testing of Fire Hose*, 2003 edition.

E.1.2 Other Publications.

E.1.2.1 American Association of Motor Vehicle Administrators Publications. American Association of Motor Vehicle Administrators, P.O. Box 79702, Baltimore, MD 21279-0702.

Vehicle Inspection Handbook, Passenger Vehicles & Light Trucks, 1999.

Vehicle Inspection Handbook, Trucks, Buses, & Trailers, 1999.

E.1.2.2 ASME Publications. American Society of Mechanical Engineers, Three Park Avenue, New York, NY 10016-5990.

ASME B40.100, *Pressure Gauges and Gauge Attachments*, 2005.

E.1.2.3 U.S. Government Publications. U.S. Government Printing Office, Washington, DC 20402.

Title 29, Code of Federal Regulations, Section 1910.177, "Servicing multi-piece and single piece rim wheels" Mar. 7, 1996.

E.2 Informational References. (Reserved)

E.3 References for Extracts in Informational Sections.

NFPA 1901, *Standard for Automotive Fire Apparatus*, 2003 edition.

Copyright National Fire Protection Association
Provided by IHS under license with NFPA
No reproduction or networking permitted without license from IHS
Not for Resale

Index

Copyright © 2007 National Fire Protection Association. All Rights Reserved.

The copyright in this index is separate and distinct from the copyright in the document that it indexes. The licensing provisions set forth for the document are not applicable to this index. This index may not be reproduced in whole or in part by any means without the express written permission of NFPA.

-A-

Accessories
- Air-powered ..... 7.13, 8.12(4)
- Electrical 8.11
- Engine-driven accessories, operation during pump test of 18.6.3, A.18.6.3

Acoustic emission inspections 19.7.6
- Definition 3.3.1

Adjust (definition) 3.3.2

Aerial devices ..... 4.1.4, D.2, D.5; *see also* Aerial ladders; Elevating platforms; Water towers
- Air storage systems 10.4
- Definition 3.3.3
- Inspection and maintenance ..... 4.5.4.1, Chap. 10, D.4
  - Bolt and pin inspection 19.6
  - Personnel for 19.1.5, 19.2, A.19.1.5
  - Results, form for recording ..... C.3, Fig. C.3(e)
  - Visual inspection 19.4
  - Weld inspection ..... *see* Weld inspection, aerial devices
- Nondestructive testing procedures ..... *see* Nondestructive testing (NDT)
- Out-of-service 6.1.6.3, 6.10
- Performance testing ..... Chap. 19, C.3, Fig. C.3(d), Fig. C.3(e)
- Third-party test companies 19.3

Aerial ladders D.1, D.2
- Definition 3.3.4
- Hydraulic components ..... *see* Hydraulic components
- Illumination 19.8.6.25
- Inspection and testing ..... 19.8, A.19.8.4.16.2 to A.19.8.12
  - Nondestructive tests (NDT) 19.8.1.3, 19.8.12.2
  - Water tower 19.10.6
- Records
  - Service 19.8.2
  - Test 19.8.12, A.19.8.12
- Sections
  - Alignment 19.8.6.4
  - Definition 3.3.5
  - Hydraulic, pneumatic, and electrical lines in 19.8.6.5
- Stabilizers ..... *see* Stabilizers
- Structural modifications, improper repairs, or added weight 19.8.6.1
- Turntable, torque box, suspension, and tractor-drawn components 19.8.4, A.19.8.4.16.2

Air brakes 6.8.1, 7.12.10, A.6.8.1.1

Air compressors
- Air brakes ..... 6.8.1.1(7), 6.8.1.1(8), 7.12.10.4
- Foam systems 12.3, A.12.3.3.1
- Hydraulic-driven air compressor
  - Compressed air foam systems (CAFS) 12.3.6
  - Utility air and compressed breathing air systems 14.9.4
- Power takeoff (PTO)-driven air compressor
  - Compressed air foam systems (CAFS) 12.3.5
  - Utility air and compressed breathing air systems 14.9.3
- Utility air and compressed breathing air systems 14.5, 14.9, A.14.9.1.1

Air-cooled engines
- Air compressors driven by 12.3.3, 14.9.1, A.12.3.3.1, A.14.9.1.1
- Line voltage generator driven by 13.7.1, A.13.7.1.1

Air filtration system, engine ..... 6.4.2(1), D.4

Air intake system, engine 7.7

Air-over-hydraulic brakes 6.8.3

Air-powered accessories ..... 7.13, 8.12(4)

Air storage systems, aerial device 10.4

Air storage tanks 14.7

Air systems ..... *see* Utility air and compressor breathing air systems

Alignment
- Definition 3.3.6
- Driveline components 7.10.1
- Frame and suspension 7.2.3

Alternator ..... 8.5.1(1), 8.5.2, 17.5, A.8.5.2, A.17.5, A.17.8.4, D.3, D.4

Ambient temperature (definition) 3.3.7

American Society for Nondestructive Testing (ASNT) 19.2.3
- Definition 3.3.8

American Welding Society (AWS) ..... 19.5.3 to 19.5.5
- Definition 3.3.9

Anchor ears and plates
- Elevation cylinder 19.8.4.14, 19.9.7.2, 19.9.8.12
- Extension cylinder 19.8.6.26, 19.9.9.10

Ancillary boom ladders 19.9.9.2
- Definition 3.3.10

Apparatus, fire ..... *see* Fire apparatus

Application of standard 1.3

Approved (definition) 3.2.1, A.3.2.1

Articulating booms
- Definition 3.3.11
- Lower boom ..... 19.9.7, 19.10.7, A.19.9.7.3.2, A.19.9.7.5(4)(b)
- Upper boom ..... 19.9.8, 19.10.8, A.19.9.8.6(4)(b), A.19.9.8.13.2
- Water system pressure test 19.9.14.3.2, 19.9.14.3.3, 19.10.11.3.2, 19.10.11.3.3, A.19.9.14.3.2

Authority having jurisdiction ..... 4.2, 4.3.1.2, 4.5.3, 6.1.1 to 6.1.3, 6.1.5, A.4.3.1.2, A.4.5.3
- Definition 3.2.2, A.3.2.2

Automatic electrical load management system 8.7, 18.6.3.2.3, A.8.7.2
- Definition 3.3.12

Auxiliary braking system D.3

Auxiliary hydraulic power 19.8.4.21
- Definition 3.3.13

Auxiliary pumps ..... 9.1.1, 9.2, A.9.2.1 to A.9.2.4.2
- Definition 3.3.14, A.3.3.14

Auxiliary systems, other 4.1.9

Axles ..... 6.3, 7.3.1, A.6.3.1(4)
- Axle weight test, fire apparatus ..... 16.2, A.16.2.3 to A.16.2.4(4)
- Steering axle ..... 6.3.1(4)
  - Definition 3.3.120

-B-

Babbitts 19.8.6.12

Base rails ..... 19.8.6.8, A.19.8.6.8(2), A.19.8.6.8(3)(b)
- Definition 3.3.15

Base sections (definition) 3.3.16

Batteries ..... 8.2(1), 8.4, 8.8(1), 17.3, 17.7, A.17.3.2.1, D.2

Belt-driven line voltage generators 13.10

Body 4.1.1, 6.2, 7.15, A.6.2.3, A.7.15.4, A.7.15.5, D.2

Bolts
- Inspection 19.6
- Rotation-bearing mounting 19.8.4.1

Boom boost cylinders ..... 19.9.8.3 to 19.9.8.5
- Brackets 19.9.8.3
- Definition 3.3.18
- Link pins 19.9.8.5

Copyright National Fire Protection Association
Provided by IHS under license with NFPA
No reproduction or networking permitted without license from IHS
Not for Resale

Booms .....*see also* Articulating booms; Elevation cylinders; Lower booms; Telescoping booms; Upper booms
Ancillary boom ladders 19.9.9.2
Definition 3.3.10
Assemblies ..... 19.9.7.5, 19.9.8.6, 19.9.9, 19.9.9.1, A.19.9.7.5(4)(b), A.19.9.8.6(4)(b), A.19.9.9.1(4)(b), A.19.9.9.12.2
Boost cylinders ..... 19.9.8.3 to 19.9.8.5
Definition 3.3.17
Illumination 19.9.6.12
Inspection and testing ..... 19.9.6 to 19.9.9, A.19.9.7.3.2 to A.19.9.9.12.2
Load test 19.9.12.6, 19.9.12.7
Support 19.9.7.12
Definition 3.3.19
Bow (definition) 3.3.20
Braces, vertical and diagonal 19.8.6.7
Brackets
Boom boost cylinder 19.9.8.3
Platform mounting 19.9.6.2
Braking system 4.5.4.1, 6.8, 7.4.6, 7.12, A.6.8.1.1, A.6.8.2.1, A.7.12, D.4
Aerial ladder extension motor brake-holding capacity ... 19.8.6.18
Air brakes 6.8.1, 7.12.10, A.6.8.1.1
Air-over-hydraulic brakes 6.8.3
Antilock brakes 6.8.1.2, 6.8.2.2, 7.12.8, 16.3.1
Auxiliary braking system D.3
Hydraulic brakes 6.8.2, 7.12.9, A.6.8.2.1
Parking brake ..... 6.8.1.1(6), 6.8.2.1(5), 7.12.2, 7.12.3, 16.4, A.6.9.1(6), A.16.4.1, A.16.4.2, D.2, D.3
Tests ..... 7.12.10.6 to 7.12.10.10, 16.3, 16.4, A.16.3.3, A.16.4.1, A.16.4.2
Transmission 7.9.10
Wheel chocks 6.8.4
Breathing air compressor systems .....*see* Utility air and breathing air compressor systems
Breathing air systems .....*see* Utility air and breathing air compressor systems

-C-

Cables 19.9.7.10, 19.9.8.8
Definition 3.3.21
Extension 19.9.9.5
Cable separation guide 19.8.6.16
Definition 3.3.22
Cab tilting systems 7.14.7, A.7.14.7.1
CAFS .....*see* Compressed air foam systems (CAFS)
Calibrate
Definition 3.3.23
Pump test gauges, calibration of 18.5.5
Carbon monoxide monitors, pump tests 18.6.4
Chains 19.9.7.10, 19.9.8.8
Charging system ..... 6.7.1(3), 8.5, 17.5 to 17.9, A.8.5.2, A.17.5 to A.17.9.3
Chassis ..... 4.1.1, 6.3, A.6.3.1(4)
Air-powered accessories ..... 7.13, 8.12(4)
Definition 3.3.24
Tests Chap.16
Chemicals, use and disposal of 4.4.4
Clutch 6.6, 7.9.2
Collector rings 19.8.4.13
Definition 3.3.25
Combination vehicle
Aerial ladders 19.8.4, A.19.8.4.16.2
Definition 3.3.26
Communication system, aerial ladder 19.8.4.24
Compartmentation 6.2, 7.15, A.6.2.3, A.7.15.4, A.7.15.5
Components
Compressed air foam systems (CAFS) 12.2, 12.3.1, 12.3.3.1, 12.3.4.1, 12.3.5.1, 12.3.6.1, A.12.3.3.1
Definition 3.3.27
Foam proportioning systems 11.2
Low voltage electrical systems 8.1.2, 8.2
Other 4.1.9
Pump, modification or repair of 18.2, A.18.2
Utility air and compressed breathing air systems 14.2
Compound gauges 18.5.4.2
Definition 3.3.28, A.3.3.28
Compressed air foam systems (CAFS) 4.1.6
Compressed air source 12.3, A.12.3.3.1
Hydraulic-driven air compressor 12.3.6
Power takeoff (PTO)-driven air compressor 12.3.5
Inspection and maintenance ..... Chap. 12
Performance tests ..... Chap. 21, Fig. C.3(h)
Controls .....*see also* Interlocks
Aerial ladder 19.8.4.18, 19.8.5.10, 19.8.6.30
Elevating platform 19.9.6.10, 19.9.10, 19.9.11, 19.9.12.5
Emergency hand-crank 19.8.4.20
Pump engine control interlock ..... 6.9.1(6), 18.7.4, A.6.9.1(6), A.18.7.4.1 to A.18.7.4.3
Throttle 19.8.4.23
Tip 19.8.6.30
Water tower 19.10.10.4
Winch 15.4, 19.9.6.6
Cooling system, engine .....*see* Engine
Crew and passenger compartment ..... 4.1.1, 6.2, 7.14, A.6.2.3, A.7.14.6, A.7.14.7.1, D.1 to D.3, D.5
Cylinder links 19.9.7.6
Definition 3.3.29
Cylinder pins 19.8.4.15, 19.8.5.7, 19.8.6.27, 9.9.7.6, 19.9.8.5, 19.9.9.11
Cylinders .....*see also* Boom boost cylinders; Elevation cylinders; Extension cylinders
Inspection and testing, post load-test 19.9.12.8
Platform leveling ..... 19.9.8, A.19.9.8.6(4)(b), A.19.9.8.13.2

-D-

Deficiencies (defects) 6.1.1, 6.1.4
Braking systems 6.8, A.6.8.1.1, A.6.8.2.1
Chassis, axles, steering and suspension systems, driveline, wheels, and tires ..... 6.3, A.6.3.1(4)
Definition 3.3.30
Driving and crew areas, body and compartmentation 6.2, A.6.2.3
Engine cooling system 6.5
Engine systems 6.4, A.6.4.1
Fire pump system ..... 6.9, 18.8.1, A.6.9.1(6), A.18.8.1
Low voltage and line voltage electrical systems ..... 6.7, A.6.7.1(4), A.6.7.3(1)
Transmission and clutch 6.6
Definitions ..... Chap. 3
Deflection (definition) 3.3.31
Deformation
Aerial devices ..... 6.10.1(8)
Air intake system 7.7.3
Axles 7.3.1
Belts 7.5.6, 7.11.5
Body and compartmentation 7.15.1, 7.15.2, 7.15.3
Braking system 7.12.10.2, 7.12.10.5
Cab mounting system 7.14.5
Compressed air foam systems 12.3.1, 12.3.3.1, 12.3.5.1, 12.3.6.1, A.12.3.3.1
Definition 3.3.32
Engine exhaust system 7.8.2
Engine fuel system 7.6.2
Equipment mounting system 7.14.6, A.7.14.6
Heat exchangers 7.5.10, 7.9.11
Line voltage electrical systems 13.7.1.1, 13.7.2.1, 13.8.1, 13.9.1, A.13.7.1.1
Low voltage electrical systems ..... 8.2, 8.5.1, 8.6, 8.7.1, 8.8 to 8.10, 8.12
Powered equipment racks 7.16.1

Copyright National Fire Protection Association
Provided by IHS under license with NFPA
No reproduction or networking permitted without license from IHS
Not for Resale

Pumping system 9.2.5
Steering system 7.11.5
Utility air and breathing air compressor systems 14.4.1, 14.6.1, 14.8, 14.9.1.1, 14.9.2.1, 14.9.3.1, 14.9.4.1, A.14.8, A.14.9.1.1
Water and agent tanks 9.3
Wheels and bearings 7.3.2, 7.3.6
Diagnostic checks 4.5.5, A.4.5.5
Body and compartmentation 7.15.1.1, 7.15.1.2, 7.15.2.2, 7.15.3
Braking system 7.12.2, 7.12.3, 7.12.8.1, 7.12.10.1.1, 7.12.10.3, 7.12.10.8
Chassis air-powered accessories 7.13
Compressed air foam system 12.2.2, 12.3.1, 12.3.2, 12.3.5.1, 12.3.6.1
Crew and passenger compartment ..... 7.14.1 to 7.14.4, 7.14.7.1, A.7.14.7.1
Definition 3.3.33
Driveline 7.10.2
Elevating platform 19.9.10, 19.9.11
Engine cooling system 7.5.8, 7.5.9
Engine fuel system ..... 7.6.4 to 7.6.6, A.7.6.5
Foam proportioning system 11.2.2, 11.4, 11.8
Frequency of 4.5.3, 4.5.5, A.4.5.3, A.4.5.5
Line voltage electrical system 13.2.3, 13.2.4, 13.5.1, 13.6
Low voltage electrical system ..... 8.2, 8.5, 8.6, 8.8 to 8.12, A.8.5.2
Powered equipment rack 7.16.2, 7.16.3, 7.16.5
Pump system ..... 9.2.1, 9.2.4.1, 9.2.4.2, 9.2.6, 9.2.7, 9.2.8.1, A.9.2.1, A.9.2..2, A.9.2.4.1
By qualified persons 4.3.1, A.4.3.1.1, A.4.3.1.2
Steering system 7.11.2
Transmission 7.9.1, 7.9.2, 7.9.8, 7.9.9
Utility air and breathing air compressor system 14.5.3, 14.6.1, 14.9.3.1, 14.9.4.1
Winch 15.2, 15.4.4
Dielectric voltage withstand test 22.8, A.22.8.3
Discharge, pump
Gauges 18.5.4.4
Hose 18.5.2, A.18.5.2.1, B.2.1
Pressure 18.7.9, A.18.7.9
Definition 3.3.34
Rate B.1
Tables ..... Tables B.3(a) to (d)
Discontinuity (definition) 3.3.35
Diverter valve 19.8.5.12
Definition 3.3.36
Documentation 4.7, A.4.7, C.3
Aerial devices
Performance tests ..... 19.8.12, 19.9.17, 19.10.14, A.19.8.12, A.19.9.17, A.19.10.14, Fig. C.3(d)
Service records 19.8.2, 19.9.2, 19.10.2
Definition 3.3.37
Inspection form ..... 4.5.4.2, C.3, Fig. C.3(a), C.3(b)
Maintenance of records C.5
Operational checks, checksheet for ..... 6.1.6.2, Fig. C.3(a), C.3 to C.5
Preventive maintenance tasks ..... 4.7.1, C.3 to C.5
Pump performance tests
Environmental conditions 18.7.1, A.18.7.1
Results ..... 18.8.3, 18.8.5, A.18.8.3, Fig. C.3(c)
Utility and breathing air compressor system
Inspection and maintenance records 14.10
Performance tests 23.3
Draft, pump
Priming device tests 18.7.5
Suction hose and strainer from 18.5.1.1, A.18.5.1.1
Test site from 18.3.1, A.18.3.1
Drift (definition) 3.3.38
Drivetrain ..... 4.5.4.1, 6.3, 7.10, A.6.3.1(4)
Definition 3.3.39
Driving compartment ..... 4.1.1, 6.2, A.6.2.3, D.1; *see also* Crew and passenger compartment

-E-

Eddy current inspections 19.7.7
Electrical lines
Aerial ladders 19.8.6.5
Elevating platforms 19.9.6.4, 19.9.7.14, 19.9.8.15, 19.9.9.14
Electrical load management system ..... *see* Automatic electrical load management system
Electrical systems ..... *see* Line voltage electrical system; Low voltage electrical system
Electronic battery conductance tester 17.3.2.1
Definition 3.3.40, A.3.3.40
Elevating platforms D.2
Booms ..... *see* Booms
Controls ..... *see* Controls
Definition 3.3.41
Gate latches and hinge points 19.9.6.8
Hinge pins 19.9.6.9, 19.9.7.1
Hydraulic components ..... *see* Hydraulic components
Inspections and tests ..... 19.9, A.19.9.7.3.2 to A.19.9.14.3.2
Leveling system
Leveling cylinders 19.9.9.8
Leveling linkages 19.9.7.7, 19.9.8.2
Load test 19.9.12
Monitor and nozzle 19.9.6.11
Mounting brackets 19.9.6.2
Nondestructive tests (NDT) 19.9.1.2, 19.9.17.2
Pneumatic, electrical, and hydraulic lines in 19.9.6.4
Rated capacity identification 19.9.6.7
Records
Service 19.9.2
Test 19.9.17, A.19.9.17
Stabilizer inspection and test 19.9.5
Structural modifications, improper repairs, or added weight 19.9.6.1
Turntable and torque box inspection and test 19.9.4
Winch, auxiliary 19.9.6.5, 19.9.6.6
Elevation cylinders
Aerial ladder 19.8.4.16, A.19.8.4.16.2
Anchor ears and plates 19.8.4.14
Holding valves 19.8.4.17
Pins 19.8.4.15
Definition 3.3.42
Elevation platform
Anchor ears and plates 19.9.7.2, 19.9.8.12
Holding valves 19.9.7.4, 19.9.8.14
Indicator 19.9.9.6
Link pins 19.9.7.6
Lower boom ..... 19.9.7.2 to 19.9.7.4, 19.9.7.6, A.19.9.7.3.2
Upper boom ..... 19.9.8.12 to 19.9.8.14, A.19.9.8.13.2
Elevation indicators 19.8.6.19, 19.9.9.6
Definition 3.3.43
Elevation locks 19.8.4.10
Definition 3.3.44
Emergency hand-crank controls 19.8.4.20
Definition 3.3.45
Emergency repairs, resources to perform C.2
Emissions systems 4.4.7, 7.8
Engine 6.4, 7.4, A.6.4.1, A.7.4.5
Air filtration system ..... 6.4.2(1), D.4
Air intake system 7.7
Cooling system 6.4.1, 6.5, 7.5, A.6.4.1, D.4
Air-cooled engine-driven line voltage generator 13.7.1, A.13.7.1.1
Water-cooled engine-driven line voltage generator 13.7.2
Deficiencies (defects)
Listing of 6.4.1
Loss of power, causes of A.6.4.1
Exhaust system 4.4.7, 7.8
Fuel system ..... 6.4.1(5), 6.4.1(6), 6.4.2(2), 7.6, A.6.4.1, A.7.6, D.4
Interlocks ..... *see* Interlocks
Pump ..... *see* Pump engines

Copyright National Fire Protection Association
Provided by IHS under license with NFPA
No reproduction or networking permitted without license from IHS
Not for Resale

Engine-driven generators 13.7, A.13.7.1.1
Equipment racks, powered 7.16
Equivalency to standard 1.4
Exhaust system, engine 4.4.7, 7.8
Extension and retraction motor 19.8.6.15
Extension cables 19.8.6.14, 19.9.9.5
Extension cylinders ..... 19.8.5.7 to 19.8.5.9, 19.8.6.28, 19.9.9.10 to 19.9.9.13, A.19.8.6.28.2, A.19.9.9.12.2
Anchor ears and plates 19.8.6.26, 19.9.9.10
Definition 3.3.46
Holding valves 19.8.5.9, 19.8.6.29, 19.9.9.13
Pins 19.8.5.7, 19.8.6.27, 19.9.9.11
Extension indicators 19.8.6.19
Definition 3.3.47
Extension locks 19.8.4.10
Extension sheaves 19.8.6.13, 19.9.9.4
Definition 3.3.48
Extension warning, maximum ..... 19.8.6.24, 19.9.7, A.19.9.7.3.2, A.19.9.7.5(4)(b)

-F-

Failures
Definition 3.3.49
Stop engine light ..... 6.4.1(7)
Fasteners 19.8.6.3
Definition 3.3.50
Ferromagnetic materials (definition) 3.3.51
Fire apparatus .....*see also* Combination vehicle; Reserve fire apparatus; Retired fire apparatus
Definition 3.3.52
Engine-driven accessories 18.6.3, A.18.6.3
Guidelines for first-line and reserve apparatus ..... Annex D
In-service (definition) 3.3.62
Water tanks on ..... 18.7.14, A.18.7.14(9)
Fire hydrants .....*see* Hydrants, fire
Fire pumps .....*see* Pump systems
Flowmeters 19.8.9.5, 19.9.14.4, 19.10.11.4
Fly locks .....*see* Ladder locks
Fly sections (definition) 3.3.55
Foam concentrate or foam solution tanks 11.7
Foam proportioning systems ..... 4.1.5; *see also* Compressed air foam systems (CAFS)
Inspection and maintenance ..... Chap. 11
Cleaning 11.3, A.11.3
Components 11.2
Foam concentrate pump 11.6
Instrumentation and controls 11.4
Strainer or filter 11.5
Multiple concentrate systems 20.4
Performance tests ..... Chap. 20, C.3, Fig. C.3(g)
Folding steps 19.8.6.10
Fracture (definition) 3.3.56
Frame 7.2
Aerial ladder, unit main frame of 19.8.4.26
Aerial ladder stabilizers, mounting of 19.8.5.3
Definition 3.3.57
Suspension system, mounting of 19.8.4.4
Torque box, mounting of 19.8.4.2
Tractor-drawn components, mounting of 19.8.4.3
Fuel system, engine .....*see* Engine

-G-

Gate latches and hinge points 19.9.6.8
Gauge pressure (definition) 3.3.59
Gauges
Calibration 18.5.5
Compound 18.5.4.2
Definition 3.3.28, A.3.3.28
Definition 3.3.58
Discharge 18.5.4.4
Grade A gauges, requirements for 18.5.4.1, A.18.5.4.1
Pitot 18.5.4.5
Pressure 18.5.4.4, 18.7.12, 19.8.9.6, 19.9.14.5, 19.10.11.5, A.18.7.12.1, B.1
Pump intake 18.5.1.2, 18.5.4.2, B.2.1
Snubbing 18.5.4.6, B.1
Gauge test, pump 18.7.12, A.18.7.12.1
Generators D.4
Belt-driven 13.10
Engine-driven 13.7, A.13.7.1.1
Hydraulic-driven 13.9
PTO (power takeoff) – driven 13.8
Ground fault circuit interrupters (GFCIs) ..... 6.7.3(3), 13.5, 22.5, A.22.5
Guides 19.8.6.12, 19.9.9.3

-H-

Hand-crank controls .....*see* Emergency hand-crank controls
Hardness readings ..... 19.7.5, 19.8.6.6(2), 19.8.6.8(3), A.19.8.6.6.(2)(b), A.19.8.6.8(3)(b)
Hazardous materials, use and disposal of 4.4.4, 4.4.5
Heat exchangers 7.5.10, 7.9.11
Hinge pins 19.8.5.7, 19.9.6.9, 19.9.7.1
Definition 3.3.60
Holding valves 19.8.4.17, 19.8.5.9, 19.9.7.4, 19.9.8.14, 19.9.9.13
Definition 3.3.61
Extension cylinders 19.8.6.29
Hooks 19.9.7.11, 19.9.8.9
Hose .....*see also* Suction hose
Discharge 18.5.2, A.18.5.2.1, B.2.1
Intake 18.5.1.2, A.18.5.1.2
Length B.1
Hydrants, fire
Intake hose from 18.5.1.2, A.18.5.1.2
Testing from 18.3.2, A.18.3.2
Hydraulic brakes 6.8.2, 6.8.3, 7.12.9, A.6.8.2.1
Hydraulic components, aerial devices ... 6.10.1(4); *see also* Hydraulic fluid
Aerial ladders ..... 19.8.3, 19.8.4.8, 19.8.4.9, 19.8.4.12, 19.8.4.16 to 19.8.4.18, 19.8.4.25, 19.8.5.4, 19.8.6.5, A.19.8.4.16.2
Elevating platforms 19.9.3, 19.9.6.4, 19.9.7.8, 19.9.7.9, 19.9.8.7, 19.9.9.9
Water towers 19.10.3
Hydraulic-driven air compressor 12.3.6, 14.9.4
Hydraulic-driven line voltage generators 13.9
Hydraulic fluid ..... 19.8.4.16.2(1), A.19.8.4.16.2
Leaks
Aerial ladders ..... 19.8.3, 19.8.4.9, 19.8.4.12, 19.8..4.16.1(2), 19.8.4.17, 19.8.4.18(1), 19.8.5.4, 19.8.5.10(1)
Elevating platforms 19.9.3, 19.9.7.8, 19.9.7.9, 19.9.8.7, 19.9.9.9
Water towers 19.10.3
Post-operational test analysis of 19.8.11, 19.9.16, 19.10.13, A.19.8.11, A.19.9.16, A.19.10.13
Winches 15.4.3
Hydraulic power, auxiliary 19.8.4.21
Definition 3.3.13

-I-

Ignition system ..... 6.7.1(2), 8.6
Illumination
Aerial ladder 19.8.6.25
Elevating platform boom 19.9.6.12
Indicators .....*see also* Warning devices
Elevation 19.8.6.19, 19.9.9.6
Definition 3.3.43
Extension 19.8.6.19
Definition 3.3.47

Copyright National Fire Protection Association
Provided by IHS under license with NFPA
No reproduction or networking permitted without license from IHS
Not for Resale

Leveling 19.8.5.11
Lights, lower boom angle indicators 19.9.7.13
Load limit 19.8.4.19
Definition 3.3.76
Rung alignment 19.8.6.19
Turntable alignment 19.8.4.22
Industrial supply pumps, performance testing of ....*see* Performance tests
In-service fire apparatus (definition) 3.3.62
Inspect(ion) .... 4.1, 7.1, A.4.1; *see also* Out of service; specific systems
Definition 3.3.63
Documentation 4.7, A.4.7
Frequency of ..... 4.5.3 to 4.5.6, A.4.5.3 to A.4.5.5
Manufacturer's recommended procedures 4.5.2, A.4.5.2
Motor vehicle 4.5.1
By qualified persons 4.3.1, A.4.3.1.1, A.4.3.1.2
Instability (definition) 3.3.64, A.3.3.64
Instrumentation 4.5.4.1
Intake gauges, pumps 18.5.1.2, 18.5.4.2, B.2.1
Intake hose, pumps 18.5.1.2, A.18.5.1.2
Intake pressure 18.5.1.2.1
Definition 3.3.65
Intake relief valve system test 18.7.11, A.18.7.11
Interlocks ..... 7.14.7.1(2), 7.16.1, 7.16.2, 9.2.7(1), 19.8.5.10(3)
Aerial ladder engine speed 19.8.4.28
Body and compartmentation 7.15.1.2
Charging system ..... 8.5.1(5)
Definition 3.3.66
Instrumentation 13.6
Pump engine control ..... 6.9.1(6), 9.2.4.2, 18.7.4, A.6.9.1(6), A.9.2.4.2, A.18.7.4.1 to A.18.7.4.3, D.2, D.3
Stabilizer 19.8.5.5
Starting system ..... 8.2(4)
Transmission/aerial device 19.8.4.27
Ironing ..... 6.10.1(7)
Definition 3.3.67

-K-

Knuckle 19.9.7.9
Definition 3.3.68

-L-

Ladder cradle 19.8.6.21
Definition 3.3.69
Ladder locks 19.8.6.9, 19.8.6.20
Bed lock 19.8.6.22
Definition 3.3.70
Ladders
Aerial .....*see* Aerial ladders
Ancillary boom 19.9.9.2
Definition 3.3.10
Leaks/leakage
Axles ..... 6.3.1(7), 6.3.1(8), 6.3.1(10)
Body and compartmentation 7.15.1
Brakes ..... 6.8.2.1(1), 7.12.10.3
Cab tilting systems 7.14.7.1, A.7.14.7.1
Class 2 liquid leakage ..... 6.4.1(6), 6.8.2.1(1)
Definition 3.3.72.2
Class 3 liquid leakage ..... 6.3.1(7), 6.3.1(8), 6.3.1(10), 6.4.1(2), 6.5.1(1), 6.6.1(3), 6.9.1(4)
Definition 3.3.72.3
Class 1 liquid leakage (definition) 3.3.72.1
Compressed air foam systems 12.2.2, 12.3.1, 12.3.3.1, 12.3.5.1, 12.3.6.1, A.12.3.3.1
Definition 3.3.71, 3.3.72
Engine cooling system .... 6.4.1(4), 6.5.1(1), 7.5.3 to 7.5.5, A.6.4.1
Engine system ..... 6.4.1(2), 7.4.2
Exhaust leaks 7.8.2
Foam proportioning systems 11.2.2
Fuel system ..... 6.4.1(6), 7.6.2
Hydraulic fluid .....*see* Hydraulic fluid
Line voltage generation units 13.2.2, 13.7.1.1, 13.7.2.1, 13.8.1, 13.9.1, A.13.7.1.1
Pumping system ..... 6.9.1(4), 9.2.1, 9.2.4.1, 9.2.4.2, 9.2.5, 9.2.8.1, A.9.2.1, A.9.2..2, A.9.2.4.1
Steering system 7.11.2
Transmission ..... 6.6.1(3), 7.9.1, 7.9.8, 7.9.9, 7.9.11, A.6.4.1
Utility air and breathing air compressor systems 14.4.3, 14.6.1, 14.7.1, 14.9.1.1, 14.9.2.1, 14.9.3.1, 14.9.4.1, A.14.9.1.1
Water system, elevating platform 19.9.14.3.2.5, 19.9.14.3.4, A.19.9.14.3.4
Wheel bearing 7.3.2
Leveling indicators 19.8.5.11
Leveling linkages 19.9.7.7, 19.9.8.2, 19.9.12.8
Definition 3.3.73
Lift ..... Table 18.5.1.1.1(a), B.4
Altitude or weather, effect of B.5
Definition 3.3.74
Lighting
Apparatus ..... 6.7.1(1), 7.15.1.2, 8.9, 8.12(1), D.1 to D.3
Lower boom angle indicator 19.9.7.13
Work 8.10, 13.4
Lines/hoses, hydraulic .....*see* Hydraulic components
Line voltage electrical system 4.1.2.2
Dielectric voltage withstand test 22.8, A.22.8.3
Inspection and maintenance ..... Chap. 13, D.4
Appliances and controls 13.4
Belt-driven generators 13.10
Circuit protection ..... 6.7.3(3), 13.5, 22.5, A.22.5
Engine-driven generators 13.7, A.13.7.1.1
Hydraulic-driven generators 13.9
Instrumentation 13.6
Power source 13.2, 22.3, 22.7, A.22.7.2
PTO (power takeoff)–driven generators 13.8
Wiring 13.3
Out-of-service ..... 6.7, A.6.7.1(4), A.6.7.3(1)
Performance tests ..... Chap. 22, C.3, Fig. C.3(f)
Liquid penetrant inspections 19.7.4
Definition 3.3.75
Load limit indicators 19.8.4.19
Definition 3.3.76
Load tests
Aerial ladders ..... 19.8.7, A.19.8.7.1 to A.19.8.7.5.2
Elevating platform 19.9.12
Horizontal 19.8.7.4, A.19.8.7.4.2, A.19.8.7.4.8
Line voltage electrical system power source 22.7, A.22.7.2
Low voltage electrical systems, total continuous electrical load test 17.8, A.17.8
Maximum elevation 19.8.7.5, A.19.8.7.5.2
Locks .....*see also* Elevation locks; Extension locks; Rotation locks
Ladder bed 19.8.6.22
Manual spring 19.8.5.15
Lower booms
Alignment with upper boom 19.9.8.1
Angle indicator lights 19.9.7.13
Inspection and test ..... 19.9.7, 19.10.7, A.19.9.7.3.2, A.19.9.7.5(4)(b)
Lower controls, elevating platform 19.9.10, 19.9.12.5, 19.9.13.1
Low voltage electrical system 4.1.2.1
Accessories 8.11
Alternator .....*see* Alternator
Apparatus lighting ..... 6.7.1(1), 8.9
Automatic electrical load management system 8.7, 18.6.3.2.3, A.8.7.2
Batteries .....*see* Batteries
Charging system ..... 6.7.1(3), 8.5, 17.5 to 17.9, A.8.5.2, A.17.5 to A.17.9.3
Ignition system ..... 6.7.1(2), 8.6
Inspection and maintenance ..... Chap. 8, D.4
Miscellaneous components 8.8
Out-of-service ..... 6.7, A.6.7.1(4), A.6.7.3(1)

--`,,```,,,,````-`-`,,`,,`,`,,`---

Copyright National Fire Protection Association
Provided by IHS under license with NFPA
No reproduction or networking permitted without license from IHS
Not for Resale

Performance testing ..... Chap. 17
Alternator 17.5, A.17.5
Battery 8.4, 17.3, A.17.3.2.1
Battery charger/conditioner test 17.7
Documentation ..... C.3, Fig. C.3(e)
Frequency 17.2, A.17.2
Regulator 17.6, A.17.6.6
Solenoid and relay test 17.9, A.17.9.3
Starter wiring 17.4, A.17.4
Total continuous electrical load test 17.8, A.17.8
Starting system 8.2, 17.4, A.17.4
Upgrades D.3
Warning devices ..... 6.7.1(4), 8.12, A.6.7.1(4)
Wiring 8.3, 17.4, A.17.4
Work lighting 8.10

-M-

Magnetic particle inspections 19.7.3
Definition 3.3.77
Mainframe ..... *see* Torque box
Maintenance ..... 4.1, 4.6, A.4.1, D.4; *see also* Preventive maintenance; specific systems
Definition 3.3.78
Frequency of 4.5.3, A.4.5.3
Manufacturer's recommended procedures 4.5.2, A.4.5.2
By qualified persons 4.3, A.4.3.1.1, A.4.3.1.2
Safety requirements 4.4, A.4.4.1, A.4.4.3
Manual spring locks 19.8.5.15
Manufacturer
Authorized representative, breathing air compressor system serviced by 14.1.1
Instructions C.4, D.4
Aerial devices ..... 19.1.1(4), 19.1.3.1, 19.1.3.2, 19.1.4.1, 19.1.4.2, A.19.1.3.1
Chassis, driving/crew compartments, and body 7.1
Pumps 18.7.9.1.2, 18.7.9.2.3, 18.8.9.3.2
Out-of-service criteria 6.1.3
Recommendations (specifications) 4.5.2, 4.6.1, 6.1.4, A.4.5.2
Aerial device maintenance 10.3
Air storage system tests 10.4.1
Automatic electrical load management system 8.7, A.8.7.2
Battery test and performance 8.4
Braking system ..... 7.12.1, 7.12.4, 7.12.6, 7.12.10.2, 7.12.10.4 to 7.12.10.7, A.7.12.1
Cab tilting systems 7.14.7.2
Compressed air foam system 12.2.1, 12.3.1, 12.3.2, 12.3.4.2, 12.3.5, 12.3.6
Definition 3.3.79
Engine air intake system 7.7.2
Engine coolant 7.5.1
Engine exhaust system 7.8.2
Engine fuel system maintenance 7.6.1, 7.6.3
Engine maintenance 7.4.3, 7.4.5, 7.4.6, A.7.4.5
Engine oil level 7.4.1
Foam proportioning system 11.6.1, 11.6.2
Parts/components for maintenance or repair 4.6.2
Pump system 9.1.1, 9.2.2, 9.2.4, 9.2.5, A.9.2.4.1, A.9.2.4.2
Steering system 7.11.3, 7.11.6
Tire inflation 7.3.3, A.7.3.3
Transmission system ..... 7.9.3 to 7.9.5
Utility air and breathing air compressor systems 14.2.1, 14.2.4, 14.6.2, 14.9.1.2, 14.9.2.2, 14.9.3. 14.9.4
Water tanks 9.1.2, 9.3
Wheel-attachment nuts, torque of 7.3.5, A.7.3.5
Winches 15.3.2, 15.4.3
Maximum extension warning device 19.8.6.24
Measurement, units of 1.5, A.1.5
Metal aerial ladder ..... *see* Aerial ladders
Modification
Aerial ladders 19.8.6.1
Definition 3.3.80
Elevating platforms 19.9.6.1
Pump 18.2, A.18.2
Monitors, elevating platform 19.9.6.11
Motor vehicle inspection 4.5.1

-N-

Negative pressure (definition) ... 3.3.81; *see also* Vacuum (fire pump)
Net pump pressure (definition) 3.3.82, A.3.3.82
Neutral position (definition) 3.3.83
Nondestructive testing (NDT)
Aerial devices D.2
Aerial ladders 19.8.12.2
Damaged device, test of 19.1.3.3
Elevating platforms 19.9.1.2, 19.9.17.2
Frequency 19.1.1, 19.1.2
Inspection personnel, certification of 19.2.2, 19.2.3
Procedures 19.7
By third-party companies 19.3
Water towers 19.10.1.2, 19.10.14.2
Weld inspection 19.5.2
Definition 3.3.84
Nozzles
Elevating platform 19.9.6.11
Fire pump 18.5.2.1, 18.5.3, A.18.5.2.1, A.18.5.3.2, B.3

-O-

Oil pressure B.1
Operating controls ..... *see* Controls
Operating tests
Aerial ladder 19.8.8, A.19.8.8.2
Elevating platform 19.9.13, A.19.9.13.3
From lower controls 19.9.10
From platform controls 19.9.11
Water tower 19.10.10, A.19.10.10.2
Operational check (definition) 3.3.85
Operator alert device (definition) .... 3.3.87; *see also* Warning devices
Operators 19.1.5, A.19.1.5
Definition 3.3.86
Optical source (definition) 3.3.88, A.3.3.88
Out of service 4.2
Criteria ..... Chap. 6
Aerial device systems 6.1.6.3, 6.10, 19.1.3
Braking systems 6.8, A.6.8.1.1, A.6.8.2.1
Chassis, axles, steering and suspension systems, driveline, wheels, and tires ..... 6.3, A.6.3.1(4)
Driving and crew areas, apparatus body and compartmentation 6.2, A.6.2.3
Engine cooling system 6.5
Engine systems 6.4, A.6.4.1
Fire pump systems ..... 6.9, A.6.9.1(6)
Low voltage and line voltage electrical systems ..... 6.7, A.6.7.1(4), A.6.7.3(1)
Transmission and clutch 6.6
Definition 3.3.89
Overhaul (rebuild)
Definition 3.3.90
Refurbishing fire apparatus D.5
Overload test 18.7.7.2
Override (definition) 3.3.91

-P-

Pads
Stabilizer 19.8.5.2
Definition 3.3.118
Wear 19.8.6.12, 19.9.9.3
Performance tests
Aerial devices ..... Chap. 19, C.3, Fig. C.3(d)
Breathing air compressor system ..... Chap. 23
Chassis, driving and crew compartment, and body 4.1.1.2
Compressed air foam system (CAFS) ..... Chap. 21, Fig. C.3(h)

Copyright National Fire Protection Association
Provided by IHS under license with NFPA
No reproduction or networking permitted without license from IHS
Not for Resale

Conditions for 18.4, 18.6, A.18.4, A.18.6
Definition 3.3.92
Foam proportioning system ..... Chap. 20
Line voltage electrical system ..... Chap. 22
Low voltage electrical system .....*see* Low voltage electrical system
Procedure ..... 18.7, A.18.7.1 to A.18.7.14(9)
Pumps, fire and industrial supply ..... 4.1.3.2, Chap. 18
Conditions for test 18.6, A.18.6
Environmental conditions 18.4, 18.7.1, A.18.4, A.18.7.1
Equipment, test ..... 18.5, A.18.5.1.1 to A.18.5.6
Flow-measuring equipment 18.5.3, A.18.5.3.2
Flowmeter test 18.7.13, A.18.7.13.1
Frequency 18.2, A.18.2
Pressure control 18.7.9, 18.7.10, A.18.7.9, A.18.7.10
Procedure ..... 18.7, A.18.7.1 to A.18.7.14(9), Annex B
Pumping tests .... 18.7.7, 18.7.8, A.18.7.7.4, A.18.7.8.3, Annex B
Pump shift indicator 18.7.3, A.18.7.3
Results ..... 18.8, A.18.8, C.3, Fig. C.3(c)
Test site 18.3, A.18.3.1, A.18.3.2
Scheduling of C.3
Personnel, inspection and testing 19.1.5, 19.2, A.19.1.5
Pins ..... 19.6, 19.9.12.8; *see also* Cylinder pins; Hinge pins
Pitot tubes 18.5.3.2.2, A.18.5.3.2.2, B.1, B.2.7, B.3
Platform (definition) ..... 3.3.93; *see also* Elevating platforms
Pneumatic lines 19.8.6.5, 19.9.6.4, 19.9.7.14, 19.9.9.14
Definition 3.3.94
Elevating platform upper boom 19.9.8.15
Positive stops and alignment 19.8.5.13
Powered equipment racks 7.16
Definition 3.3.96
Power source
Definition 3.3.95
Line voltage electrical systems 13.2, 22.3, 22.7, A.22.7.2
Winches, power supply for 15.4
Power takeoffs .....*see* PTOs (power takeoffs)
Pressure
Discharge 18.7.9, A.18.7.9
Definition 3.3.34
Gauge pressure (definition) 3.3.59
Insufficient, causes of B.2.5
Intake 18.5.1.2.1
Definition 3.3.65
Negative (definition) ..... 3.3.81; *see also* Vacuum (fire pump)
Net pump (definition) 3.3.82, A.3.3.82
Oil B.1
Relief hydraulic 19.8.4.25
Pressure control test
Fire pumps 18.7.9, A.18.7.9
Industrial supply pumps 18.7.10, A.18.7.10
Pressure gauges .....*see* Gauges
Pressure-measuring equipment 18.5.4, A.18.5.4.1
Pressure regulators, fire pump system B.1
Pressure tests, water system
Aerial ladder ..... 19.8.9.4, A.19.8.9.4.1 to A.19.8.9.4.3
Elevating platform 19.9.14.3, A.19.9.14.3.2, A.19.9.14.3.4
Water tower 19.10.11.3, A.19.10.11.3.4
Preventive maintenance
Check sheets for ..... 6.1.6.2, C.3, Fig. C.3(a), Fig. C.3(b)
Definition 3.3.97
Developing a preventive maintenance system ..... Annex C
Documentation 4.7.1
Establishing program C.4
Information for C.3
Performance test and inspection test results, forms to record ..... C.3, Fig. C.3(c) to (h)
Record maintenance C.5
Resources for C.2
Schedule for C.3, C.4
Priming, fire pumps B.1
Priming device test 18.7.5
Troubleshooting B.2.1
Proper(ly) (definition) 3.3.98
PTOs (power takeoffs) ..... 6.10.1(1), 7.9.8, 12.3.5, 14.9.3, 19.8.4.11
Definition 3.3.99
Line voltage generators 13.8
Pump driven through, interlock test 18.7.4.1, 18.7.4.2, A.18.7.4.1, A.18.7.4.2
Pulleys 19.9.7.11, 19.9.8.9
Pump engines 9.2.4, 9.2.9, A.9.2.4.1, A.9.2.4.2
Accessories, engine-driven 18.6.3, A.18.6.3
Defects in 18.8.1, A.18.8.1
Oil pressure B.1
Speed-measuring equipment 18.5.6, A.18.5.6
Speed of B.1, B.2.2, B.2.5, B.2.6, B.2.7
Check, governed engine speed 18.7.2
Temperature B.1
Pumps, hydraulic, aerial ladder 19.8.4.12
Pump systems 4.1.3, 9.1.1, D.2
Auxiliary pumps .....*see* Auxiliary pumps
Controls 9.2.7
Drive system .....*see* Pump engines
Fire pumps ..... 4.5.4.1, 9.1.1, 9.2, A.9.2.1 to A.9.2.4.2, D.4
Air leaks B.2.1, B.2.4, B.2.6
Altitude, effect of 18.5.1.1, A.18.5.1.1, B.5
Defects in 18.8.1, 18.8.4, A.18.8.1
Definition 3.3.53
Discharge .....*see* Discharge
Intake arrangement, restrictions in B.2.2, B.2.3, B.2.6
Lift .....*see* Lift
Out-of-service 6.1.6.3
Performance tests .....*see* Performance tests
Priming .....*see* Priming, fire pumps
Speed of B.1
Troubleshooting B.2
Weather conditions, effect of B.5
Foam concentrate pump 11.6
Industrial supply ..... 9.1.1, 9.2, A.9.2.1 to A.9.2.4.2; *see also* Performance tests
Inspection and maintenance ..... Chap. 9, D.4
Instrumentation and gauges 9.2.6
Out of service, apparatus taken ..... 6.9, A.6.9.1(6)
Piping and valves 9.2.5
Priming system 9.2.8
Pump and roll capability, fire apparatus 18.7.4.3, A.18.7.4.3
Pump shift indicator, test of 18.7.3, A.18.7.3, D.3
Transfer pump ..... 9.1.1, 9.2, A.9.2.1 to A.9.2.4.2
Definition 3.3.128
Purpose of standard 1.2

-Q-

Qualified persons 4.3, 4.5.7, 19.1.5, A.4.3.1.1, A.4.3.1.2, A.19.1.5, C.2
Definition 3.3.100

-R-

Rails ..... 19.8.6.6, 19.8.6.8, A.19.8.6.6(2)(b), A.19.8.6.8(2), A.19.8.6.8(3)(b)
Rated capacity
Aerial device
Definition 3.3.101
Elevating platform 19.9.6.7
Water pump ..... 18.5.1.1.1, 18.5.1.1.2, 18.5.2.1, 18.7.7.1, 18.7.7.2, 18.7.7.4, 18.7.8 to 18.7.10, A.18.5.2.1, A.18.7.7.4, B.3
Definition 3.3.102
Rated vertical height (definition) 3.3.103, A.3.3.103
Records .....*see* Documentation
References ..... Chap. 2, Annex E
Refurbishing fire apparatus D.5
Regulator ..... 8.5.1(1), 17.6, A.17.6.6
Relief hydraulic pressure 19.8.4.25

Copyright National Fire Protection Association
Provided by IHS under license with NFPA
No reproduction or networking permitted without license from IHS
Not for Resale

Relief valves
Aerial devices 19.8.9.7, 19.9.14.6, 19.10.11.6
Definition 3.3.104
Fire pump systems B.1
Repairs 4.6
Aerial devices 19.1.3.1, 19.1.3.2, A.19.1.3.1
Elevating platform 19.9.6.1
Flowmeters 19.9.14.4.2
Improper 19.8.6.1
By qualified person 4.5.7
Definition 3.3.105
Documentation 4.7.1
Emergency repairs, resources to perform C.2
Pump 18.2, A.18.2
Replace
Definition 3.3.106
Fire apparatus, replacement of D.5
Reserve fire apparatus 4.1
Definition 3.3.107
Guidelines for ..... Annex D
Retired fire apparatus ..... 4.1, Chap. 5, A.4.1
Definition 3.3.108
Revolution counter, pump 18.5.6, A.18.5.6, B.2.7
Road test 16.5
Rods 19.9.7.10, 19.9.8.8
Rollers 19.8.6.11, 19.9.10.5
Rotation-bearing mounting bolts 19.8.4.1
Rotation gear
Definition 3.3.109
Inspection 19.8.4.5
Rotation gear reduction box
Definition 3.3.110
Mounting 19.8.4.6
Rotation hydraulic swivel 19.8.4.8
Rotation locks 19.8.4.10
Definition 3.3.111
Rungs, aerial ladders
Inspection of 19.8.6.9
Rung alignment indicators, inspection of 19.8.6.19
Rung cap castings 19.8.6.9
Definition 3.3.112

-S-

Safety 4.4, A.4.4.1, A.4.4.3
Retirement of fire apparatus 5.1.1, A.5.1
Safety upgrades, equipment with ..... Annex D
Safety devices, elevating platforms 19.9.10.3, 19.9.11.3
Safety stop mechanisms 19.8.6.23, 19.9.8.11
Definition 3.3.113
Scope of standard 1.1
Service records 19.8.2, 19.9.2, 19.10.2
Service tests ..... *see* Performance tests
Severe service (definition) 3.3.115
Shall (definition) 3.2.3
Sheaves ..... *see* Extension sheaves
Should (definition) 3.2.4
Signs, inspection of 19.8.10, 19.9.15, 19.10.12
Slide blocks 19.8.6.12, 19.9.9.3
Definition 3.3.116
Slides 19.9.10.5
Sprockets 19.9.7.11, 19.9.8.9
Stabilizer pads 19.8.5.2
Definition 3.3.118
Stabilizers
Aerial ladder 19.8.5, A.19.8.5.8.2
Deployment 19.8.5.14
Diverter valve 19.8.5.12
Extension cylinders ..... 19.8.5.7 to 19.8.5.9
Hinge pins 19.8.5.7
Hydraulic lines and hose in 19.8.5.4
Interlock and warning device 19.8.5.5
Manual spring locks 19.8.5.15
Mounting to frame or torque box 19.8.5.3
Operating controls 19.8.5.10
Positive stops and alignment 19.8.5.13
Structural components 19.8.5.1
Tractor spring lockout device 19.8.5.16
Definition 3.3.117
Elevating platform 19.9.5, 19.9.12.2, 19.9.12.8
Water tower 19.10.5
Stabilizer shoe (definition) 3.3.119
Starting system 8.2, 17.4, A.17.4
Steering axle ..... 6.3.1(4)
Definition 3.3.120
Steering system ..... 6.3, 7.11, A.6.3.1(4)
Stop watch 18.5.6, A.18.5.6
Strainers 18.3.1, 18.5.1.1, A.18.3.1, A.18.5.1.1, B.2.3
Stressed-skin-type boom section (definition) 3.3.121
Structural damage, removal from service due to 19.1.3, A.19.1.3.1
Suction hose 18.3.1, A.18.3.1
Friction and entrance loss ..... 18.5.1.1.1, Table 18.5.1.1.1(b), 18.5.1.1.2
Number of suction lines ..... Table 18.5.1.1.1(a)
Problems with B.2.1, B.2.3, B.2.6
Sizes for test ..... 18.5.1.1.1, Table 18.5.1.1.1(a), 18.5.1.1.2, B.2.3
With strainer ..... *see* Strainers
Suspension system ..... 6.3, 7.2, 19.8.4, 19.8.4.4, A.6.3.1(4), A.19.8.4.16.2, D.4
Swivel, rotation hydraulic 19.8.4.8

-T-

Tachometer 18.5.6, A.18.5.6
Tanks
Air storage 10.4.1, 14.7
Foam concentrate or foam solution 11.7
Water 4.1.3, 9.1.2, 9.3, D.4, D.5
Tank-to-pump flow rate ..... 18.7.14, A.18.7.14(9)
Telescopic (definition) 3.3.122
Telescoping booms 19.10.11.3.1, 19.10.11.3.3
Ancillary ladder 19.9.9.2
Assemblies ..... 19.9.9.1, A.19.9.9.1(4)(b)
Inspection and test ..... 19.9.9, 19.10.9, A.19.9.9.1(4)(b), A.19.9.9.12.2
Water system pressure test 19.9.14.3.1, 19.9.14.3.3
Tests ..... *see also* Performance tests
Air storage system 10.4
Axle weight test, fire apparatus ..... 16.2, A.16.2.3 to A.16.2.4(4)
Braking system ..... 7.12.10.6 to 7.12.10.10, 16.3, 16.4, A.16.3.3, A.16.4.1, A.16.4.2
Definition 3.3.123
Documentation 4.7.1
Engine cooling system 7.5.5, 7.5.7
Low voltage electrical system ..... *see* Low voltage electrical system
By qualified personnel 4.3.1, A.4.3.1.1, A.4.3.1.2
Road 16.5
Transmission 7.9.6
Utility air and breathing air compressor system
Air storage tanks 14.7.1, 14.7.2
Automatic shutdown systems 14.2.4
Breathing air quality test 14.1.2, 14.10.2, 23.2
Test site 18.3, A.18.3.1, A.18.3.2
From draft 18.3.1, A.18.3.1
From hydrant 18.3.2, A.18.3.2
Third-party companies 19.3
Throttle controls 19.8.4.23
Tip controls 19.8.6.30
Tires ..... 6.3, 7.3.3, 7.3.4, A.6.3.1(4), A.7.3.3, A.7.3.4, D.4
Top rails ..... 19.8.6.6, A.19.8.6.6(2)(b)
Definition 3.3.124
Torque box
Definition 3.3.125
Inspection and test 19.8.4, 19.9.4, 19.10.4, A.19.8.4.16.2

Copyright National Fire Protection Association
Provided by IHS under license with NFPA
No reproduction or networking permitted without license from IHS
Not for Resale

Mounting to frame 19.8.4.2
Stabilizer mounting to 19.8.5.3
Torque value (definition) 3.3.126
Torsion box ..... *see* Torque box
Total continuous electrical load 17.8, 18.6.3.2, A.17.8, D.3
Definition 3.3.127
Tractor-drawn components inspection and test 19.8.4, A.19.8.4.16.2
Tractor spring lockout device 19.8.5.16
Transfer pump ..... 9.1.1, 9.2, A.9.2.1 to A.9.2.4.2
Definition 3.3.128
Transmission 4.5.4.1, 6.6, 7.9, A.6.4.1, D.2
Aerial device interlock 19.8.4.27
Pump engine control interlock, testing ..... 18.7.4.1 to 18.7.4.3, A.18.7.4.1 to A.18.7.4.3
Pump operation and ..... 18.7.4, A.6.9.1(6), A.18.7.4, D.2, D.3
Trussed-lattice-type boom section (definition) 3.3.129
Turntable
Alignment indicator 19.8.4.22
Hydraulic lines 19.8.4.9
Inspection and tests 19.8.4, 19.9.4, 19.9.12.8, 19.9.13.4, 19.10.4, A.19.8.4.16.2
Structural components 19.8.4.7
Twist (definition) 3.3.130

-U-

Ultrasonic inspections 19.7.2
Definition 3.3.131
Unit main frame, aerial ladder 19.8.4.26
Units of measurement 1.5, A.1.5
Upgrading fire apparatus D.3
Upper booms
Alignment with lower boom 19.9.8.1
Elevation cylinder ..... 19.9.8.12 to 19.9.8.14, A.19.9.8.13.2
Hold-down device 19.9.8.10
Inspection and test ..... 19.9.8, 19.10.8, A.19.9.8.6(4)(b), A.19.9.8.13.2
Pneumatic and electrical lines 19.9.8.15
Safety stop mechanism 19.9.8.11
Utility air and breathing air compresor systems 4.1.7
Aerial devices 19.8.4.29, D.2
Air compressor drive engines 14.9.1, 14.9.2, A.14.9.1.1
Hydraulic-driven air compressor 14.9.4
Power takeoff (PTO)–driven air compressor 14.9.3
Inspection and maintenance ..... Chap. 14
Air compressor 14.9, A.14.9.1.1
Air storage tanks 14.7
Components 14.2
Labels 14.3
Piping, hoses, valves, and instrumentation 14.4
Purification system 14.6
Refill stations 14.8, A.14.8
Tests
Air storage tanks 14.7.1, 14.7.2
Automatic shutdown system 14.2.4
Breathing air quality test 14.1.2, 14.10.2, 23.2
Performance tests, breathing air compressor systems ..... Chap. 23

-V-

Vacuum (fire pump) B.1
Definition 3.3.132, A.3.3.132
Measurement of B.4
Test 18.7.6, A.18.7.6
Troubleshooting B.2.1
Valves; ..... *see also* Holding valves; Relief valves
Diverter 19.8.5.12
Definition 3.3.36
Visual inspection 19.4
Definition 3.3.133

-W-

Warning devices ..... 4.5.4.1, 6.7.1(4), 6.7.3, 8.12, 13.6, A.6.7.1(4), A.6.7.3(1), D.1, D.2, D.3
Automatic electrical load management system ..... 8.7.1(4), 8.7.2, A.8.7.2
Maximum extension 19.8.6.24, 19.9.9.7
Stabilizer 19.8.5.6
Water-cooled engines
Air compressors driven by 12.3.4, 14.9.2
Line voltage generator driven by 13.7.2
Water pressure gauges 19.8.9.6, 19.9.14.5, 19.10.11.5
Water supply, pump tests ..... 18.3.1, Table 18.4, A.18.3.1
Water system tests
Aerial ladder waterway system ..... 19.8.9, A.19.8.9.4.1 to A.18.8.9.4.3
Elevating platforms 19.9.14, A.19.9.14.3.2, A.19.9.14.3.4
Water tower 19.10.11, A.19.10.11.3.4
Water tanks 4.1.3, 9.1.2, 9.3, D.4, D.5
Water towers D.2
Definition 3.3.134
Hydraulic components 19.10.3
Inspections and tests ..... 19.10, A.19.10.10.2 to A.19.10.14
Nondestructive testing (NDT) 19.10.1.2, 19.10.14.2
Records
Service 19.10.2
Test 19.10.14, A.19.10.14
Waterway system test, aerial ladders ..... 19.8.9, A.19.8.9.4.1 to A.18.8.9.4.3
Wear strips and pads 19.8.6.12, 19.9.9.3
Weight
Added
Aerial ladder 19.8.6.1
Auxiliary braking system for D.3
Elevating platform 19.9.6.1
Axle weight test, fire apparatus ..... 16.2, A.16.2.3 to A.16.2.4(4)
Complete weight analysis D.4
Out-of-service, apparatus taken 6.3.1
Refurbishing, effect of D.5
Weld deficiencies, wheels or rims ..... 6.3.1(6)
Weld inspection, aerial devices 19.5, 19.8.6.2, 19.9.12.8, 19.9.14.2
Weldments 19.8.6.2
Definition 3.3.135
Wheel chocks 6.8.4
Wheels ..... 6.3, 7.3.2, 7.3.5, 7.3.6, A.6.3.1(4), A.7.3.5
Winches ..... 4.1.8, Chap. 15
Assembly 15.2
Attachment points/mounting 15.5, 19.9.6.5
Holding capacity 19.8.6.17
Power supply and controls 15.4, 19.9.6.6
Wire or synthetic rope 15.3
Wiring
Line voltage electrical system 13.3
Low voltage electrical systems 8.3, 17.4, A.17.4
Workplace safety regulations 4.4.3, A.4.4.3

Copyright National Fire Protection Association
Provided by IHS under license with NFPA
No reproduction or networking permitted without license from IHS
Not for Resale

Sequence of Events Leading to Issuance of an NFPA Committee Document

Step 1: Call for Proposals

- Proposed new Document or new edition of an existing Document is entered into one of two yearly revision cycles, and a Call for Proposals is published.

Step 2: Report on Proposals (ROP)

- Committee meets to act on Proposals, to develop its own Proposals, and to prepare its Report.
- Committee votes by written ballot on Proposals. If two-thirds approve, Report goes forward. Lacking two-thirds approval, Report returns to Committee.
- Report on Proposals (ROP) is published for public review and comment.

Step 3: Report on Comments (ROC)

- Committee meets to act on Public Comments to develop its own Comments, and to prepare its report.
- Committee votes by written ballot on Comments. If two-thirds approve, Report goes forward. Lacking two-thirds approval, Report returns to Committee.
- Report on Comments (ROC) is published for public review.

Step 4: Technical Report Session

- "*Notices of intent to make a motion"* are filed, are reviewed, and valid motions are certified for presentation at the Technical Report Session. ("Consent Documents" that have no certified motions bypass the Technical Report Session and proceed to the Standards Council for issuance.)
- NFPA membership meets each June at the Annual Meeting Technical Report Session and acts on Technical Committee Reports (ROP and ROC) for Documents with "certified amending motions."
- Committee(s) vote on any amendments to Report approved at NFPA Annual Membership Meeting.

Step 5: Standards Council Issuance

- Notification of intent to file an appeal to the Standards Council on Association action must be filed within 20 days of the NFPA Annual Membership Meeting.
- Standards Council decides, based on all evidence, whether or not to issue Document or to take other action, including hearing any appeals.

Committee Membership Classifications

The following classifications apply to Technical Committee members and represent their principal interest in the activity of the committee.

M *Manufacturer:* A representative of a maker or marketer of a product, assembly, or system, or portion thereof, that is affected by the standard.

U *User:* A representative of an entity that is subject to the provisions of the standard or that voluntarily uses the standard.

I/M *Installer/Maintainer:* A representative of an entity that is in the business of installing or maintaining a product, assembly, or system affected by the standard.

L *Labor:* A labor representative or employee concerned with safety in the workplace.

R/T *Applied Research/Testing Laboratory:* A representative of an independent testing laboratory or independent applied research organization that promulgates and/or enforces standards.

E *Enforcing Authority:* A representative of an agency or an organization that promulgates and/or enforces standards.

I *Insurance:* A representative of an insurance company, broker, agent, bureau, or inspection agency.

C *Consumer:* A person who is, or represents, the ultimate purchaser of a product, system, or service affected by the standard, but who is not included in the *User* classification.

SE *Special Expert:* A person not representing any of the previous classifications, but who has a special expertise in the scope of the standard or portion thereof.

NOTES;
1. "Standard" connotes code, standard, recommended practice, or guide.
2. A representative includes an employee.
3. While these classifications will be used by the Standards Council to achieve a balance for Technical Committees, the Standards Council may determine that new classifications of members or unique interests need representation in order to foster the best possible committee deliberations on any project. In this connection, the Standards Council may make appointments as it deems appropriate in the public interest, such as the classification of "Utilities" in the National Electrical Code Committee.
4. Representatives of subsidiaries of any group are generally considered to have the same classification as the parent organization.

--`,,```,,,,````-`-`,,`,,`,`,,`---

Copyright National Fire Protection Association
Provided by IHS under license with NFPA
No reproduction or networking permitted without license from IHS
Not for Resale

NFPA Technical Committee Document Proposal Form

NOTE: All Proposals must be received by 5:00 pm EST/EDST on the published Proposal Closing Date.

For further information on the standards-making process, please contact the Codes and Standards Administration at 617-984-7249 or visit www.nfpa.org/codes.

For technical assistance, please call NFPA at 1-888-344-3555.

FOR OFFICE USE ONLY

Log #:

Date Rec'd:

Please indicate in which format you wish to receive your ROP/ROC ☐ **electronic** ☐ **paper** ☒ **download**
(Note: If choosing the download option, you must view the ROP/ROC from our website; no copy will be sent to you.)

Date April 1, 200X **Name** John J. Doe **Tel. No.** 716-555-1234

Company Air Canada Pilot's Association

Street Address 123 Summer Street Lane **City** Lewiston **State** NY **Zip** 14092

Please indicate organization represented (if any)

1. (a) NFPA Document Title National Fuel Gas Code **NFPA No. & Year** 54, 200X Edition

(b) Section/Paragraph 3.3

2. Proposal Recommends (check one): ☐ new text ☒ revised text ☐ deleted text

3. Proposal (include proposed new or revised wording, or identification of wording to be deleted): [Note: Proposed text should be in legislative format; i.e., use underscore to denote wording to be inserted (inserted wording) and strike-through to denote wording to be deleted (~~deleted wording~~).]

Revise definition of effective ground-fault current path to read:

3.3.78 Effective Ground-Fault Current Path. An intentionally constructed, permanent, low impedance electrically conductive path designed and intended to carry ~~underground~~ electric fault current ~~conditions~~ from the point of a ground fault on a wiring system to the electrical supply source.

4. Statement of Problem and Substantiation for Proposal: (Note: State the problem that would be resolved by your recommendation; give the specific reason for your Proposal, including copies of tests, research papers, fire experience, etc. If more than 200 words, it may be abstracted for publication.)

Change uses proper electrical terms.

5. Copyright Assignment

(a) ☐ **I am the author of the text or other material (such as illustrations, graphs) proposed in this Proposal.**

(b) ☒ **Some or all of the text or other material proposed in this Proposal was not authored by me. Its source is as follows** (please identify which material and provide complete information on its source)**:**

ABC Co.

I agree that any material that I author, either individually or with others, in connection with work performed by an NFPA Technical Committee shall be considered to be works made for hire for the NFPA. To the extent that I retain any rights in copyright as to such material, or as to any other material authored by me that I submit for the use of an NFPA Technical Committee in the drafting of an NFPA code, standard, or other NFPA document, I hereby grant and assign all and full rights in copyright to the NFPA. I further agree and acknowledge that I acquire no rights in any publication of the NFPA and that copyright and all rights in materials produced by NFPA Technical Committees are owned by the NFPA and that the NFPA may register copyright in its own name.

Signature (Required)

PLEASE USE SEPARATE FORM FOR EACH PROPOSAL • NFPA Fax: (617) 770-3500

Mail to: Secretary, Standards Council, National Fire Protection Association, 1 Batterymarch Park, Quincy, MA 02169-7471

2/5/2007

SAMPLE

Copyright National Fire Protection Association
Provided by IHS under license with NFPA
No reproduction or networking permitted without license from IHS
Not for Resale

NFPA Technical Committee Document Proposal Form

NOTE: All Proposals must be received by 5:00 pm EST/EDST on the published Proposal Closing Date.

For further information on the standards-making process, please contact the Codes and Standards Administration at 617-984-7249 or visit www.nfpa.org/codes.

For technical assistance, please call NFPA at 1-888-344-3555.

FOR OFFICE USE ONLY

Log #: _____

Date Rec'd: _____

Please indicate in which format you wish to receive your ROP/ROC ☐ electronic ☐ paper ☐ download
(Note: If choosing the download option, you must view the ROP/ROC from our website; no copy will be sent to you.)

Date _____ **Name** _____ **Tel. No.** _____

Company _____

Street Address _____ **City** _____ **State** _____ **Zip** _____

Please indicate organization represented (if any) _____

1. (a) NFPA Document Title _____ **NFPA No. & Year** _____

(**b) Section/Paragraph** _____

2. Proposal Recommends (check one): ☐ new text ☐ revised text ☐ deleted text

3. Proposal (include proposed new or revised wording, or identification of wording to be deleted): [Note: Proposed text should be in legislative format; i.e., use underscore to denote wording to be inserted (inserted wording) and strike-through to denote wording to be deleted (~~deleted wording~~).]

4. Statement of Problem and Substantiation for Proposal: (Note: State the problem that would be resolved by your recommendation; give the specific reason for your Proposal, including copies of tests, research papers, fire experience, etc. If more than 200 words, it may be abstracted for publication.)

5. Copyright Assignment

(a) ☐ I am the author of the text or other material (such as illustrations, graphs) proposed in this Proposal.

(b) ☐ Some or all of the text or other material proposed in this Proposal was not authored by me. Its source is as follows (please identify which material and provide complete information on its source)**:**

_____

I agree that any material that I author, either individually or with others, in connection with work performed by an NFPA Technical Committee shall be considered to be works made for hire for the NFPA. To the extent that I retain any rights in copyright as to such material, or as to any other material authored by me that I submit for the use of an NFPA Technical Committee in the drafting of an NFPA code, standard, or other NFPA document, I hereby grant and assign all and full rights in copyright to the NFPA. I further agree and acknowledge that I acquire no rights in any publication of the NFPA and that copyright and all rights in materials produced by NFPA Technical Committees are owned by the NFPA and that the NFPA may register copyright in its own name.

Signature (Required) _____

PLEASE USE SEPARATE FORM FOR EACH PROPOSAL • NFPA Fax: (617) 770-3500

Mail to: Secretary, Standards Council, National Fire Protection Association, 1 Batterymarch Park, Quincy, MA 02169-7471

2/5/2007

--`,,```,,,,````-`-`,,`,,`,`,,`---

Copyright National Fire Protection Association
Provided by IHS under license with NFPA
No reproduction or networking permitted without license from IHS

Not for Resale