NFPA 1906

Standard for Wildland Fire Apparatus

2006 Edition

NFPA, 1 Batterymarch Park, Quincy, MA 02169-7471
An International Codes and Standards Organization

Copyright National Fire Protection Association
Provided by IHS under license with NFPA
No reproduction or networking permitted without license from IHS

Not for Resale

IMPORTANT NOTICES AND DISCLAIMERS CONCERNING NFPA DOCUMENTS

NOTICE AND DISCLAIMER OF LIABILITY CONCERNING THE USE OF NFPA DOCUMENTS

NFPA codes, standards, recommended practices, and guides, of which the document contained herein is one, are developed through a consensus standards development process approved by the American National Standards Institute. This process brings together volunteers representing varied viewpoints and interests to achieve consensus on fire and other safety issues. While the NFPA administers the process and establishes rules to promote fairness in the development of consensus, it does not independently test, evaluate, or verify the accuracy of any information or the soundness of any judgments contained in its codes and standards.

The NFPA disclaims liability for any personal injury, property or other damages of any nature whatsoever, whether special, indirect, consequential or compensatory, directly or indirectly resulting from the publication, use of, or reliance on this document. The NFPA also makes no guaranty or warranty as to the accuracy or completeness of any information published herein.

In issuing and making this document available, the NFPA is not undertaking to render professional or other services for or on behalf of any person or entity. Nor is the NFPA undertaking to perform any duty owed by any person or entity to someone else. Anyone using this document should rely on his or her own independent judgment or, as appropriate, seek the advice of a competent professional in determining the exercise of reasonable care in any given circumstances.

The NFPA has no power, nor does it undertake, to police or enforce compliance with the contents of this document. Nor does the NFPA list, certify, test or inspect products, designs, or installations for compliance with this document. Any certification or other statement of compliance with the requirements of this document shall not be attributable to the NFPA and is solely the responsibility of the certifier or maker of the statement.

Copyright National Fire Protection Association
Provided by IHS under license with NFPA
No reproduction or networking permitted without license from IHS
Not for Resale

ADDITIONAL NOTICES AND DISCLAIMERS

Updating of NFPA Documents

Users of NFPA codes, standards, recommended practices, and guides should be aware that these documents may be superseded at any time by the issuance of new editions or may be amended from time to time through the issuance of Tentative Interim Amendments. An official NFPA document at any point in time consists of the current edition of the document together with any Tentative Interim Amendments and any Errata then in effect. In order to determine whether a given document is the current edition and whether it has been amended through the issuance of Tentative Interim Amendments or corrected through the issuance of Errata, consult appropriate NFPA publications such as the National Fire Codes® Subscription Service, visit the NFPA website at www.nfpa.org, or contact the NFPA at the address listed below.

Interpretations of NFPA Documents

A statement, written or oral, that is not processed in accordance with Section 6 of the Regulations Governing Committee Projects shall not be considered the official position of NFPA or any of its Committees and shall not be considered to be, nor be relied upon as, a Formal Interpretation.

Patents

The NFPA does not take any position with respect to the validity of any patent rights asserted in connection with any items which are mentioned in or are the subject of NFPA codes, standards, recommended practices, and guides, and the NFPA disclaims liability for the infringement of any patent resulting from the use of or reliance on these documents. Users of these documents are expressly advised that determination of the validity of any such patent rights, and the risk of infringement of such rights, is entirely their own responsibility.

NFPA adheres to applicable policies of the American National Standards Institute with respect to patents. For further information contact the NFPA at the address listed below.

Law and Regulations

Users of these documents should consult applicable federal, state, and local laws and regulations. NFPA does not, by the publication of its codes, standards, recommended practices, and guides, intend to urge action that is not in compliance with applicable laws, and these documents may not be construed as doing so.

Copyrights

This document is copyrighted by the NFPA. It is made available for a wide variety of both public and private uses. These include both use, by reference, in laws and regulations, and use in private self-regulation, standardization, and the promotion of safe practices and methods. By making this document available for use and adoption by public authorities and private users, the NFPA does not waive any rights in copyright to this document.

Use of NFPA documents for regulatory purposes should be accomplished through adoption by reference. The term “adoption by reference” means the citing of title, edition, and publishing information only. Any deletions, additions, and changes desired by the adopting authority should be noted separately in the adopting instrument. In order to assist NFPA in following the uses made of its documents, adopting authorities are requested to notify the NFPA (Attention: Secretary, Standards Council) in writing of such use. For technical assistance and questions concerning adoption of NFPA documents, contact NFPA at the address below.

For Further Information

All questions or other communications relating to NFPA codes, standards, recommended practices, and guides and all requests for information on NFPA procedures governing its codes and standards development process, including information on the procedures for requesting Formal Interpretations, for proposing Tentative Interim Amendments, and for proposing revisions to NFPA documents during regular revision cycles, should be sent to NFPA headquarters, addressed to the attention of the Secretary, Standards Council, NFPA, 1 Batterymarch Park, P.O. Box 9101, Quincy, MA 02269-9101.

For more information about NFPA, visit the NFPA website at www.nfpa.org.

--`,,```,,,,````-`-`,,`,,`,`,,`---
Copyright National Fire Protection Association
Provided by IHS under license with NFPA
No reproduction or networking permitted without license from IHS
Not for Resale

Copyright © 2006, National Fire Protection Association, All Rights Reserved

NFPA 1906

Standard for

Wildland Fire Apparatus

2006 Edition

This edition of NFPA 1906, *Standard for Wildland Fire Apparatus,* was prepared by the Technical Committee on Fire Department Apparatus.

It was issued by the Standards Council on January 27, 2006, with an effective date of February 16, 2006, and supersedes all previous editions.

This edition of NFPA 1906 was approved as an American National Standard on February 16, 2006.

Origin and Development of NFPA 1906

The first edition of NFPA 1906, *Standard for Wildland Fire Apparatus*, was published in 1995 to provide a standard for apparatus that are basically designed and deployed to combat fires in wildland. The document covered apparatus with pumps ranging in size from 20 gpm to 250 gpm (76 L/min to 950 L/min) and water tanks with a capacity of 125 gal (473 L) or more.

Requirements were also provided for the first time for foam proportioning systems using Class A foam as a fire suppressant agent and for Compressed Air Foam Systems (CAFS). The apparatus covered in the standard included built-to-specification apparatus and fire-fighting packages designed to be slipped onto a vehicle chassis.

In the 2001 edition, the requirements for low-voltage electrical systems, including the emergency warning systems, were brought in line with the requirements in NFPA 1901, *Standard for Automotive Fire Apparatus*. The chapter on pumps was reorganized to provide requirements for four types of pumps, with the range of sizes changed to include pumps from 10 gpm (38 L/min) to 500 gpm (1900 L/min). The allowable minimum size on water tanks was lowered to 50 gal (190 L), and the chapter on line-voltage systems was removed. The document was also updated in other areas where appropriate to make the requirements consistent with those in NFPA 1901.

This 2006 edition is a general updating of the document, including making requirements consistent with those in NFPA 1901 when appropriate. It adds requirements for what the manufacturer certification of test results must include, and for better illumination and signage for controls, switches, instruction plates, gauges, and instruments. This edition also introduces the concept of estimated in-service weight as a basis for measuring certain stability requirements and links the maximum top speed of the apparatus to the tire manufacturer's ratings. It also requires more head height at seating positions and the use of red seat belts if available.

The 2006 edition also reorganizes the requirements for water pumps installed on the wildland fire apparatus into seven categories and updates the requirements for baffling water tanks to better address smaller water tanks. The standard requires type testing of foam systems followed by individualized testing of each installation. Two additional annexes were added, one to provide an equipment size and weight chart, the other to provide guidelines for first-line and reserve fire apparatus.

Finally, the document has been reorganized according to the *Manual of Style for NFPA Technical Committee Documents*.

--`,,```,,,,````-`-`,,`,,`,`,,`---

Copyright National Fire Protection Association
Provided by IHS under license with NFPA
No reproduction or networking permitted without license from IHS

Not for Resale

Technical Committee on Fire Department Apparatus

Jeffrey Bowman, *Chair*
San Diego Fire Department, CA [U]

Kenneth L. Koch, *Secretary*
Sutphen Corporation, OH [M]

William M. Ballantyne, Hypro LLC, MN [M]
Rep. Fire Apparatus Manufacturers Association
Robert J. Barraclough, Plano, TX [SE]
Gene P. Carlson, VFIS/Glatfelter Insurance Group, PA [I]
Rep. Volunteer Firemen's Insurance Services, Inc.
Peter F. Darley, W. S. Darley & Company, IL [M]
Rep. National Truck Equipment Association
Ralph Dorio, Insurance Services Office, Inc., NJ [I]
Donald L. Frazeur, Los Angeles Fire Department, CA [U]
Ron W. French, JDK Management Inc., IL [SE]
Gordon L. Gholson, California Department of Forestry and Fire Protection, CA [U]
Gary Handwerk, Hale Products Inc., FL [M]
Tom Hillenbrand, Underwriters Laboratories Inc., IL [RT]
James J. Juneau, Juneau, Boll & Ward, P.L.L.C., TX [SE]
James L. Kelker, National Testing/Conam Inspection Inc., OH [RT]
William McCombs, Emergency One, Inc., FL [M]
John W. McDonald, U.S. General Services Administration, VA [E]
Dan McKenzie, U.S.D.A. Forest Service, CA [RT]
W. Kenneth Menke, Fire Service Research Institute, MO [SE]
J. Allen Metheny, Sr., Hartly Volunteer Fire Company, DE [U]
Rep. National Volunteer Fire Council
Thomas J. Mettler, Waterous Company, MN [M]
David A. Ogilvie, Pierce Manufacturing Inc., WI [M]
Jeff Piechura, Northwest Fire District, AZ [U]
Gary R. Pope, Fairfax County Fire and Rescue Department, VA [U]
James A. Salmi, Crimson Fire, PA [M]
Alan Saulsbury, Fire Spec Services, Inc., NY [SE]
Thomas A. Stalnaker, Goshen Fire Company, PA [U]
John M. Terefinko, KME Fire Apparatus, PA [M]
Robert D. Tutterow, Jr., Charlotte Fire Department, NC [U]
William von Zehle, Jr., Ridgefield, CT [U]
Rep. International Association of Fire Chiefs
David White, Fire & Safety Specialists, Inc., TX [SE]
John R. Witt, Safetek Emergency Vehicles Ltd., Canada [M]

Alternates

Robert T. Bettenhausen, Tinley Park Volunteer Fire Department, IL [U]
(Alt. to W. von Zehle, Jr.)
James T. Currin, KME Fire Apparatus, VA [M]
(Alt. to J. M. Terefinko)
Andrew L. Duke, Fairfax County Fire and Rescue Department, VA [U]
(Alt. to G. R. Pope)
Ronald L. Ewers, Class I, FL [M]
(Alt. to G. Handwerk)
David V. Haston, U.S. Department of Agriculture, CA [RT]
(Alt. to D. McKenzie)
James Johannessen, Underwriters Laboratories Inc., PA [RT]
(Alt. to T. Hillenbrand)
Brad C. Kobielusz, Poudre Fire Authority, CO [U]
(Alt. to R. D. Tutterow, Jr.)
J. Roger Lackore, Pierce Manufacturing Inc., WI [M]
(Alt. to D. A. Ogilvie)
Madhu Manikkam, Emergency One, Inc., FL [M]
(Alt. to W. McCombs)
Thomas H. McCullough, II, VFIS Claims Management, Inc., PA [I]
(Alt. to G. P. Carlson)
W. Michael Pietsch, Mike Pietsch, P.E. Consulting Services, Inc., TX [SE]
(Alt. to D. White)
Michael C. Ruthy, W. S. Darley & Company, WI [M]
(Alt. to P. F. Darley)
Thomas G. Stites, Sutphen Corporation, OH [M]
(Alt. to K. L. Koch)
Edward F. Straw, Insurance Services Office, Inc., GA [I]
(Alt. to R. Dorio)
Phillip L. Turner, Elkhart Brass Manufacturing Co., Inc., IN [M]
(Alt. to W. M. Ballantyne)
Dean David Ulrich, Los Angeles City Fire Department, CA [U]
(Alt. to D. L. Frazeur)

Nonvoting

Howard L. McMillen, Fort Worth, TX
(Member Emeritus)
Heinz E. Otte, Mendota Heights, MN
(Member Emeritus)

Carl E. Peterson, NFPA Staff Liaison

This list represents the membership at the time the Committee was balloted on the final text of this edition. Since that time, changes in the membership may have occurred. A key to classifications is found at the back of the document.

NOTE: Membership on a committee shall not in and of itself constitute an endorsement of the Association or any document developed by the committee on which the member serves.

Committee Scope: This Committee shall have primary responsibility for documents on the design and performance of fire apparatus for use by the fire service.

Copyright National Fire Protection Association
Provided by IHS under license with NFPA
No reproduction or networking permitted without license from IHS
Not for Resale

Contents

Chapter 1 Administration **1906–** 5
1.1 Scope **1906–** 5
1.2 Purpose **1906–** 5
1.3 Application **1906–** 5
1.4 Retroactivity **1906–** 5
1.5 Equivalency **1906–** 5
1.6 Units of Measure **1906–** 5

Chapter 2 Referenced Publications **1906–** 5
2.1 General **1906–** 5
2.2 NFPA Publications **1906–** 5
2.3 Other Publications **1906–** 5
2.4 References for Extracts in Mandatory Sections **1906–** 6

Chapter 3 Definitions **1906–** 6
3.1 General **1906–** 6
3.2 NFPA Official Definitions **1906–** 6
3.3 General Definitions **1906–** 6

Chapter 4 General Requirements **1906–** 9
4.1 General **1906–** 9
4.2 Responsibility of the Purchaser **1906–** 9
4.3 Responsibility of the Contractor **1906–** 9
4.4 Legal Requirements **1906–** 10
4.5 Manufacturer Certification of Test Results **1906–** 10
4.6 Personnel Protection **1906–** 10
4.7 Controls and Instructions **1906–** 10
4.8 Component Protection **1906–** 10
4.9 Vehicle Stability **1906–** 10
4.10 Fire Apparatus Performance **1906–** 11
4.11 Roadability **1906–** 11
4.12 Serviceability **1906–** 11
4.13 Road Tests **1906–** 11
4.14 Tests on Delivery **1906–** 11
4.15 Apparatus Certification **1906–** 11
4.16 Documentation **1906–** 11
4.17 Data Required of the Contractor **1906–** 12

Chapter 5 Chassis and Vehicle Components **1906–** 12
5.1 Carrying Capacity **1906–** 12
5.2 Engine and Engine System Design **1906–** 13
5.3 Vehicle Components **1906–** 14

Chapter 6 Low-Voltage Electrical Systems and Warning Devices **1906–** 15
6.1 General **1906–** 15
6.2 Wiring **1906–** 15
6.3 Power Supply **1906–** 16
6.4 Batteries **1906–** 16
6.5 Starting Device **1906–** 17
6.6 Temperature Exposure **1906–** 17
6.7 Electromagnetic Interference **1906–** 17
6.8 Optical Warning Devices **1906–** 17
6.9 Audible Warning Devices **1906–** 20
6.10 Work Lighting **1906–** 20
6.11 Backup Alarm **1906–** 20
6.12 Stop, Tail, and Directional Lights **1906–** 20
6.13 Electrical System Performance Tests **1906–** 20
6.14 Documentation **1906–** 21

Chapter 7 Driving and Crew Areas **1906–** 21
7.1 General **1906–** 21
7.2 Cab Tilt Systems **1906–** 22
7.3 Driving Compartment **1906–** 22

Chapter 8 Body, Compartments, and Equipment Mounting **1906–** 23
8.1 Compartmentation **1906–** 23
8.2 Equipment Containment **1906–** 23
8.3 Powered Equipment Racks **1906–** 23
8.4 SCBA Storage **1906–** 23
8.5 Pump and Plumbing Access **1906–** 23
8.6 Stepping, Standing, and Walking Surfaces **1906–** 23
8.7 Access Handrails **1906–** 24
8.8 Metal Finish **1906–** 24
8.9 Hose Storage **1906–** 24
8.10 Receivers and Anchors for Rope and Removable Winches **1906–** 25
8.11 Slip-On Fire-Fighting Module **1906–** 25

Chapter 9 Water Pumps **1906–** 25
9.1 Performance Requirements **1906–** 25
9.2 Pumping Suction Capability **1906–** 26
9.3 Priming **1906–** 26
9.4 Construction Requirements **1906–** 27
9.5 Pump Intake **1906–** 28
9.6 Pump Discharge Outlets **1906–** 29
9.7 Pump Operator's Position **1906–** 29
9.8 Gauges and Instruments **1906–** 29
9.9 Pump Controls **1906–** 30
9.10 Pump-and-Roll Performance **1906–** 32
9.11 Required Testing **1906–** 32

Chapter 10 Pump Engines **1906–** 34
10.1 General **1906–** 34
10.2 Engine and Engine System Design **1906–** 34
10.3 Cooling System **1906–** 34
10.4 Lubrication System **1906–** 34
10.5 Fuel and Air System **1906–** 35
10.6 Exhaust System **1906–** 35
10.7 Engine Controls **1906–** 35
10.8 Electrical System and Devices **1906–** 35
10.9 Starting Device **1906–** 35
10.10 Fuel Tanks **1906–** 35

Copyright National Fire Protection Association
Provided by IHS under license with NFPA
No reproduction or networking permitted without license from IHS
Not for Resale

Chapter 11 Water Tanks **1906–** 36
11.1 Tank Capacity **1906–** 36
11.2 Tank Construction **1906–** 36
11.3 Tank-to-Pump Intake Line **1906–** 36
11.4 Filling and Venting **1906–** 36
11.5 Water Tank Capacity Certification **1906–** 36

Chapter 12 Equipment Carried on Wildland Fire Apparatus **1906–** 37
12.1 Suction Hose **1906–** 37
12.2 Minor Equipment **1906–** 37

Chapter 13 Foam Proportioning Systems for Class A Foam Concentrate **1906–** 37
13.1 Application **1906–** 37
13.2 Requirements by Type of Foam Proportioning System **1906–** 37
13.3 Design and Performance Requirements of a Foam Proportioning System **1906–** 37
13.4 Controls for Foam Proportioning Systems **1906–** 37
13.5 Foam Proportioning System Pressure Gauges, Flowmeters, and Indicators **1906–** 38
13.6 Atmospheric Foam Concentrate Tank **1906–** 38
13.7 Foam Concentrate Pump **1906–** 39
13.8 Pressure Vessel Foam Concentrate or Foam Solution Tanks **1906–** 39
13.9 Labels, Plates, and Instructions **1906–** 39
13.10 Foam Proportioning System Accuracy ... **1906–** 39
13.11 Testing and Documentation **1906–** 40

Chapter 14 Compressed Air Foam Systems (CAFS) **1906–** 40
14.1 Application **1906–** 40
14.2 General Requirements **1906–** 40
14.3 Compressed Air System **1906–** 40
14.4 Air Mixing **1906–** 41
14.5 Compressed Air System Piping **1906–** 41
14.6 Air System Controls **1906–** 41
14.7 Foam System Pressure Gauges, Flowmeters, and Indicators **1906–** 41
14.8 Labels, Plates, and Instructions **1906–** 41
14.9 Manufacturer's Predelivery Tests **1906–** 41

Chapter 15 Winches **1906–** 42
15.1 General **1906–** 42
15.2 Winch Wire or Synthetic Rope **1906–** 42
15.3 Free-Spooling Clutch **1906–** 42
15.4 Electric-Powered Winches **1906–** 42
15.5 Hydraulically Driven Winches **1906–** 43

Chapter 16 Vehicle Protection Systems **1906–** 43
16.1 Brush Rails **1906–** 43
16.2 Grille Guard **1906–** 43
16.3 Skid Plates **1906–** 44

Annex A Explanatory Material **1906–** 44

Annex B Specifying and Procuring Wildland Fire Apparatus **1906–** 66

Annex C Weights and Dimensions for Common Equipment **1906–** 87

Annex D Guidelines for First Line and Reserve Apparatus **1906–** 96

Annex E Informational References **1906–** 98

Index **1906–** 99

Copyright National Fire Protection Association
Provided by IHS under license with NFPA
No reproduction or networking permitted without license from IHS
Not for Resale

NFPA 1906

Standard for

Wildland Fire Apparatus

2006 Edition

IMPORTANT NOTE: This NFPA document is made available for use subject to important notices and legal disclaimers. These notices and disclaimers appear in all publications containing this document and may be found under the heading "Important Notices and Disclaimers Concerning NFPA Documents." They can also be obtained on request from NFPA or viewed at www.nfpa.org/disclaimers.

NOTICE: An asterisk (*) following the number or letter designating a paragraph indicates that explanatory material on the paragraph can be found in Annex A.

A reference in brackets [ ] following a section or paragraph indicates material that has been extracted from another NFPA document. As an aid to the user, the complete title and edition of the source documents for extracts in mandatory sections of the document are given in Chapter 2 and those for extracts in informational sections are given in Annex E. Editorial changes to extracted material consist of revising references to an appropriate division in this document or the inclusion of the document number with the division number when the reference is to the original document. Requests for interpretations or revisions of extracted text shall be sent to the technical committee responsible for the source document.

Information on referenced publications can be found in Chapter 2 and Annex E.

Chapter 1 Administration

1.1* Scope. This standard defines the requirements for new automotive fire apparatus, including apparatus equipped with a slip-on fire-fighting module, designed primarily to support wildland fire suppression operations.

1.2 Purpose. This standard specifies the minimum requirements for a new automotive wildland fire apparatus.

1.3 Application.

1.3.1* This standard shall apply to new fire apparatus that meet the following criteria:

(1) Designed specifically for supporting wildland fire suppression operations
(2) Contracted for on or after July 1, 2006

1.3.2 Nothing shall prevent the use of the standard prior to July 1, 2006 if the purchaser and contractor agree.

1.3.3 If the primary purpose of the apparatus is to support structural fire fighting or associated fire department operations, the requirements of NFPA 1901, *Standard for Automotive Fire Apparatus*, shall apply.

1.4* Retroactivity. The standard is not intended to be applied retroactively.

1.5 Equivalency. Nothing in this standard is intended to prevent the use of systems, methods, or devices of equivalent or superior quality, strength, fire resistance, effectiveness, durability, and safety over those prescribed by this standard.

1.5.1 Technical documentation shall be submitted to the authority having jurisdiction to demonstrate equivalency.

1.5.2 The system, method, or device shall be approved for the intended purpose by the authority having jurisdiction.

1.6* Units of Measure. In this standard, values for measurement in U.S. units are followed by an equivalent in SI units. Either set of values can be used, but the same set of values (either U.S. units or SI units) shall be used consistently.

Chapter 2 Referenced Publications

2.1 General. The documents or portions thereof listed in this chapter are referenced within this standard and shall be considered part of the requirements of this document.

2.2 NFPA Publications. National Fire Protection Association, 1 Batterymarch Park, Quincy, MA 02169-7471.

NFPA 1901, *Standard for Automotive Fire Apparatus,* 2003 edition.
NFPA 1961, *Standard on Fire Hose,* 2002 edition.
NFPA 1963, *Standard for Fire Hose Connections,* 2003 edition.

2.3 Other Publications.

2.3.1 ASME Publications. American Society of Mechanical Engineers, Three Park Avenue, New York, NY 10016-5990.

ASME *Boiler and Pressure Vessel Code*, Section VIII, Division 1 and Division 2, 2004.

ASME B1.20.7*, Hose Coupling Screw Threads, Inch*, 1991.

ASME B40.100, *Pressure Gauges and Gauge Attachments*, 1998.

2.3.2 ASTM Publications. American Society for Testing and Materials, 100 Barr Harbor Drive, West Conshohocken, PA 19428-2959.

ASTM D 4956, *Standard Specification for Retroreflective Sheeting for Traffic Control*, 2005.

ASTM F 1677, *Standard Test Method for Using a Portable Inclinable Articulated Strut Slip Tester (PIAST)*, 2005.

ASTM F 1679, *Standard Test Method for Using a Variable Incidence Tribometer (VIT)*, 2004.

2.3.3 NEMA Publication. National Electrical Manufacturers Association, 1300 North 17th Street, Suite 1847, Rosslyn, VA 22209.

NEMA Z535.4, *Standard for Product Safety Signs and Labels*, 2002.

2.3.4 SAE Publications. Society of Automotive Engineers, 400 Commonwealth Drive, Warrendale, PA 15096.

SAE J156, *Fusible Links*, 2000.

SAE J541, *Voltage Drop for Starting Motor Circuits*, 1996.

SAE J551/2, *Test Limits and Methods of Measurement of Radio Disturbance Characteristics of Vehicles, Motorboats, and Spark-Ignited Engine-Driven Devices*, 1994.

SAE J553, *Circuit Breakers*, 2004.

SAE J554, *Electric Fuses (Cartridge Type)*, 1987.

SAE J578, *Color Specification*, 2002.

Copyright National Fire Protection Association
Provided by IHS under license with NFPA
No reproduction or networking permitted without license from IHS
Not for Resale

SAE J595, *Directional Flashing Optical Warning Devices for Authorized Emergency, Maintenance, and Service Vehicles*, 2005.

SAE J683, *Tire Chain Clearance — Trucks, Buses (except Suburban, Intercity, and Transit Buses), and Combinations of Vehicles*, 1985.

SAE J833, *Human Physical Dimensions*, 1989.

SAE J845, *360 Degree Warning Devices for Authorized Emergency, Maintenance, and Service Vehicles*, 1997.

SAE J994, *Alarm — Backup — Electric, Laboratory Performance Testing*, 2003.

SAE J1127, *Battery Cable*, 2000.

SAE J1128, *Low Tension Primary Cable*, 2000.

SAE J1292, *Automobile, Truck, Truck-Tractor, Trailer, and Motor Coach Wiring*, 1981.

SAE J1318, *Gaseous Discharge Warning Lamp for Authorized Emergency, Maintenance, and Service Vehicles*, 1998.

SAE J1330, *Photometry Laboratory Accuracy Guidelines*, 2000.

SAE J1690, *Flashers*, 1996.

SAE J1849, *Emergency Vehicle Sirens*, 2002.

SAE J1888, *High Current Time Lag Electric Fuses*, 1990.

SAE J1889, *L.E.D. Signal and Marking Lighting Devices*, 2005.

SAE J2077, *Miniature Blade Type Electrical Fuses*, 1990.

SAE J2180, *A Tilt Table Procedure for Measuring the Static Rollover Threshold for Heavy Trucks*, 1998.

2.3.5 TRA Publication. The Tire and Rim Association, Inc., 175 Montrose West Ave., Suite 150, Copley, OH 44321.

Tire and Rim Association — Year Book, 2005.

2.3.6 UL Publication. Underwriters Laboratories Inc., 333 Pfingsten Road, Northbrook, IL 60062-2096.

UL 969, *Standard for Marking and Labeling Systems*, 1995.

2.3.7 U.S. Government Publications. U.S. Government Printing Office, Washington, DC 20402.

Title 49, Code of Federal Regulations, Part 178.37, "Specification 3AA and 3AAX seamless steel cylinders."

Title 49, Code of Federal Regulations, Part 393.94(c), "Vehicle interior noise levels test procedure."

Title 29, Code of Federal Regulations, Part 1910.169, "Air receivers."

Title 49, Code of Federal Regulations, Part 571, "Federal Motor Vehicle Safety Standards (FMVSS)":

No. 209, "Seat belt assemblies"

No. 210, "Seat belt assembly anchorages"

No. 302, "Flammability of interior materials"

2.3.8 Other Publication.

Merriam-Webster's Collegiate Dictionary, 11th edition, Merriam-Webster, Inc., Springfield, MA, 2003.

2.4 References for Extracts in Mandatory Sections.

NFPA 10, *Standard for Portable Fire Extinguishers,* 2002 edition.
NFPA 70, *National Electrical Code®,* 2005 edition.

NFPA 1150, *Standard on Foam Chemicals for Fires in Class A Fuels,* 2004 edition.

NFPA 1451, *Standard for a Fire Service Vehicle Operations Training Program,* 2002 edition.

NFPA 1901, *Standard for Automotive Fire Apparatus,* 2003 edition.

Chapter 3 Definitions

3.1 General. The definitions contained in this chapter shall apply to the terms used in this standard. Where terms are not defined in this chapter or within another chapter, they shall be defined using their ordinarily accepted meanings within the context in which they are used. *Merriam-Webster's Collegiate Dictionary,* 11th edition, shall be the source for the ordinarily accepted meaning.

3.2 NFPA Official Definitions.

3.2.1* Approved. Acceptable to the authority having jurisdiction.

3.2.2* Authority Having Jurisdiction (AHJ). An organization, office, or individual responsible for enforcing the requirements of a code or standard, or for approving equipment, materials, an installation, or a procedure.

3.2.3 Shall. Indicates a mandatory requirement.

3.2.4 Should. Indicates a recommendation or that which is advised but not required.

3.3 General Definitions.

3.3.1 Acceptance. An agreement between the purchasing authority and the contractor that the terms and conditions of the contract have been met. [**1901,** 2003]

3.3.2 Acceptance Tests. Tests performed on behalf of or by the purchaser at the time of delivery to determine compliance with the specifications for the fire apparatus. [**1901,** 2003]

3.3.3 Active Horizontal Angles of Light Emission. The angles, measured in a horizontal plane passing through the optical center of the optical source, as specified by the manufacturer of the optical device, between which the optical source contributes optical power. [**1901,** 2003]

3.3.4 Angle of Approach. The smallest angle made between the road surface and a line drawn from the front point of ground contact of the front tire to any projection of the apparatus in front of the front axle. [**1901,** 2003]

3.3.5 Angle of Departure. The smallest angle made between the road surface and a line drawn from the rear point of ground contact of the rear tire to any projection of the apparatus behind the rear axle. [**1901,** 2003]

3.3.6 ASME Pressure Vessel. A pressure vessel used for the storage or accumulation of air or gas under pressure that is constructed and tested in accordance with the ASME *Boiler and Pressure Vessel Code.* [**1901,** 2003]

3.3.7 Automatic Electrical Load Management System. A device that continuously monitors the electrical system voltage and automatically sheds predetermined loads in a selected order to prevent overdischarging of the apparatus' batteries. [**1901,** 2003]

3.3.8* Automatic Regulating Foam Proportioning System. A foam proportioning system that automatically adjusts the flow of foam concentrate into the water stream to maintain the desired proportioning ratio.

Copyright National Fire Protection Association
Provided by IHS under license with NFPA
No reproduction or networking permitted without license from IHS
Not for Resale

3.3.9 Auxiliary Braking System. A braking system in addition to the service brakes, such as an engine retarder, transmission retarder, driveline retarder, or exhaust retarders. [**1901,** 2003]

3.3.10 Auxiliary Engine-Driven Pumps. Pumps whose power is provided by engines that are independent of the vehicle engine.

3.3.11 Back-Up Alarm. An audible device designed to warn that the fire apparatus is in reverse gear. [**1901,** 2003]

3.3.12 Battery Disconnect Switch. A switch that disconnects the battery from all of the vehicle's wiring.

3.3.13 Bubble (Foam). A thin-walled, roughly spherical, film of liquid inflated with air. [**1901,** 2003]

3.3.14 Carbon Monoxide Monitor. A monitoring device that samples a purified air stream for trace elements of carbon monoxide (CO). [**1901,** 2003]

3.3.15 Center of Gravity. The point at which the entire weight of the fire apparatus is considered to be concentrated so that, if supported at this point, the apparatus would remain in equilibrium in any position. [**1901,** 2003]

3.3.16 Chassis. The basic operating motor vehicle including the engine, frame, and other essential structural and mechanical parts, but exclusive of the body and all appurtenances for the accommodation of driver, property, passengers, appliances, or equipment related to other than control. Common usage might, but need not, include a cab (or cowl). [**1901,** 2003]

3.3.17 Class A Fires. Fires in ordinary combustible materials, such as wood, cloth, paper, rubber, and many plastics. [**10,** 2002]

3.3.18 Class A Foam. Foam for use on fires in Class A fuels. [**1150,** 2004]

3.3.19* Compound Gauge. A gauge that indicates pressure both above and below atmospheric pressure. [**1901,** 2003]

3.3.20* Compressed Air Foam System (CAFS). A foam system that combines air under pressure with foam solution to create foam. [**1901,** 2003]

3.3.21 Continuous Duty. Operation at a substantially constant load for an indefinitely long time. [**70,** 2005]

3.3.22* Contractor. The person or company responsible for fulfilling an agreed-upon contract. [**1901,** 2003]

3.3.23 Convenient Reach. The ability of the operator to manipulate the controls from a driving/riding position without excessive movement away from the seat back or without excessive loss of eye contact with the roadway. [**1901,** 2003]

3.3.24 Defect. A discontinuity in a part or a failure to function that interferes with the service or reliability for which the part was intended. [**1901,** 2003]

3.3.25 Discharge Outlet Size. The nominal size of the first fire hose connection from the pump on a discharge. [**1901,** 2003]

3.3.26 DOT Cylinder. A pressure vessel constructed and tested in accordance with Title 49 CFR 178.37 that is used for the storage and transportation of air under pressure. [**1901,** 2003]

3.3.27* Eductor. A device placed in a hose line or a discharge pipe that incorporates a venturi and proportions foam concentrate or other fire-fighting agents into the water stream. [**1901,** 2003]

3.3.28* Ejector. An appliance used to fill a fire engine's tank when the water source is below or beyond the engine's drafting capability.

3.3.29* Electric Siren (Electromechanical). An audible warning device that produces sound by the use of an electric motor with an attached rotating slotted or perforated disc. [**1901,** 2003]

3.3.30* Electronic Siren. An audible warning device that produces sound electronically through the use of amplifiers and electromagnetic speakers. [**1901,** 2003]

3.3.31 Emergency Vehicle. A fire apparatus or other vehicle that is permitted by law to call for the right of way while responding to an incident affecting the public safety and to block the public road while at the scene of such an incident.

3.3.32 Enclosed Compartment. An area designed to protect stored items from environmental damage (weather resistant) that is confined on six sides and equipped with an access opening(s) that can be closed and latched. [**1901,** 2003]

3.3.33 Estimated In-Service Weight. The amount that the fire apparatus manufacturer estimates the apparatus will weigh when it is placed in service with all fixed and portable equipment installed, all tanks full, and all personnel seating positions occupied.

3.3.34 Expansion Ratio. The ratio of the volume of foam in its aerated state to the original volume of nonaerated foam solution. [**1901,** 2003]

3.3.35 Final-Stage Manufacturer. A person who performs such manufacturing operations on an incomplete vehicle that it becomes a completed vehicle.

3.3.36 FMVSS. Abbreviation for Federal Motor Vehicle Safety Standard. Regulations promulgated by National Highway Transportation Safety Administration (NHTSA) of the United States under Public Law 89-563, which are mandatory and must be complied with when motor vehicles or items of motor vehicle equipment are manufactured and certified thereto. [**1901,** 2003]

3.3.37 Foam. An aerated fire-extinguishing solution created by mixing air into foam solution to form bubbles. [**1901,** 2003]

3.3.38 Foam Concentrate. Foam fire-fighting agent as received from the manufacturer that must be diluted with water to make foam solution. [**1901,** 2003]

3.3.39 Foam Proportioner. A device or method to add foam concentrate to water to make foam solution. [**1901,** 2003]

3.3.40 Foam Proportioning System. The apparatus and techniques used to mix concentrate with water to make foam solution. [**1901,** 2003]

3.3.41 Foam Solution. A homogeneous mixture of water and foam concentrate in the proper proportions. [**1901,** 2003]

3.3.42 Fully Enclosed Personnel Area. A driver or passenger compartment on the fire apparatus that provides total enclosure on all sides, top, and bottom and has positive latching on all access doors. [**1901,** 2003]

3.3.43 Gallon. United States gallon. [**1901,** 2003]

3.3.44 Gauge. A visual device that indicates a measurement.

3.3.45 Gauge Pressure. Pressure measured by an instrument where the pressure indicated is relative to atmospheric pressure. [**1901,** 2003]

3.3.46* GAWR (Gross Axle Weight Rating). The final stage manufacturer's specified maximum load-carrying capacity of an axle system, as measured at the tire-ground interfaces.

Copyright National Fire Protection Association
Provided by IHS under license with NFPA
No reproduction or networking permitted without license from IHS
Not for Resale

3.3.47* Grade. A measurement of the angle used in road design and expressed as a percentage of elevation change over distance. [**1901,** 2003]

3.3.48 Ground Clearance. The clearance under a vehicle at all locations except the axles and driveshaft connections to the axle or items designed to swing clear.

3.3.49* GVWR (Gross Vehicle Weight Rating). The final-stage manufacturer's specified maximum load-carrying capacity of a vehicle having two axle systems (a multiaxle axle installation is one system).

3.3.50 Intake Connection Size. The nominal size of the first fire hose connection from the pump on an intake. [**1901,** 2003]

3.3.51 Interlock. A device or arrangement by means of which the functioning of one part is controlled by the functioning of another. [**1901,** 2003]

3.3.52 Label. A visual indication whether in pictorial or word format that provides for the identification of a control, switch, indicator, or gauge, or the display of information useful to the operator. [**1901,** 2003]

3.3.53 Low-Voltage Circuit, Equipment, or System. An electrical circuit, equipment, or system where the voltage does not exceed 30 volts (V) rms (ac) or 42.4 V peak (dc), usually 12 V dc in fire apparatus. [**1901,** 2003]

3.3.54 Manually Regulated Foam Proportioning System. A foam proportioning system that requires manual adjustment to maintain the proportioning ratio when there is a change of flow or pressure through the foam proportioner.

3.3.55 Manufacturer. The person or persons, company, firm, corporation, partnership, or other organization responsible for turning raw materials or components into a finished product. [**1901,** 2003]

3.3.56* Maximum Pump Close-Off Pressure. The maximum pump discharge pressure obtained with all discharge outlets closed, with the pump primed and running with the pump drive engine operating at maximum obtainable speed, and with the pump intake pressure at atmospheric pressure or less. [**1901,** 2003]

3.3.57 Minimum Continuous Electrical Load. The electrical current required to continuously operate a defined set of electrical devices. [**1901,** 2003]

3.3.58 Miscellaneous Equipment. Portable tools and equipment carried on a fire apparatus not including suction hose, fire hose, ground ladders, fixed power sources, hose reels, cord reels, breathing air systems, or other major equipment or components specified by the purchaser to be permanently mounted on the apparatus as received from the apparatus manufacturer. [**1901,** 2003]

3.3.59 Miscellaneous Equipment Allowance. That portion of the GVWR allocated for the weight of the miscellaneous equipment and its mounting brackets, boards, or trays.

3.3.60 Momentary Switch. A switch that returns to the neutral position (off) when released. [**1901,** 2003]

3.3.61 National Hose Thread (NH). A standard screw thread that has dimensions for inside (female) and outside (male) fire hose connections as defined in NFPA 1963, *Standard for Fire Hose Connections.* [**1901,** 2003]

3.3.62* Net Pump Pressure. The sum of the discharge pressure and the suction lift converted to psi or kPa when pumping at draft, or the difference between the discharge pressure and the intake pressure when pumping from a hydrant or other source of water under positive pressure. [**1901,** 2003]

3.3.63 Nozzle Reaction. Force that occurs when a water stream is discharged from the nozzle. [**1901,** 2003]

3.3.64 NPSH (National Pipe Straight Hose Thread). National pipe straight hose coupling thread as specified in ASME B1.20.7, *Hose Coupling Screw Threads, Inch.*

3.3.65* Off-Road Use Vehicle. A vehicle designed to be used on other than paved or improved roads, especially in areas where no roads, poor roads, and steep grades exist and where natural hazards, such as rocks, stumps, and logs, protrude from the ground.

3.3.66 Operator's Panel. A panel containing gauges, switches, instruments, or controls where an operator can visually monitor the applicable functions. [**1901,** 2003]

3.3.67 Optical Center. The point specified by the optical warning device manufacturer of highest intensity when measuring the output of an optical warning device. [**1901,** 2003]

3.3.68 Optical Power. A unit of measure designated as candela-seconds/minute that combines the flash energy and flash rate of an optical source into one power measurement representing the true visual effectiveness of the emitted light. [**1901,** 2003]

3.3.69* Optical Source. Any single, independently mounted, light-emitting component in a lighting system. [**1901,** 2003]

3.3.70 Optical Warning Device. A manufactured assembly of one or more optical sources. [**1901,** 2003]

3.3.71 Personal Equipment Weight. A weight allowance for personal gear that is carried on the apparatus by each firefighting crew member.

3.3.72 Plate. A visual indication whether in pictorial or word format that provides instruction to the operator in the use of a component on the apparatus. [**1901,** 2003]

3.3.73* Preconnected Hose Line. A hose line that is stored on the apparatus already connected to an outlet on a pump and that can be charged by the activation of one discharge valve. [**1901,** 2003]

3.3.74 PTO. Power takeoff. [**1901,** 2003]

3.3.75 Pump Operator's Panel. The area on a fire apparatus that contains the gauges, controls, and other instruments used for operating the pump. [**1901,** 2003]

3.3.76 Pump Operator's Position. The location from which the pump operator operates the pump. [**1901,** 2003]

3.3.77 Purchaser. The authority having responsibility for the specification and acceptance of the apparatus. [**1901,** 2003]

3.3.78 Purchasing Authority. The agency that has the sole responsibility and authority for negotiating, placing, and, where necessary, modifying each and every solicitation, purchase order, or other award issued by a governing body. [**1901,** 2003]

3.3.79 Qualified Person. A person who, by possession of a recognized degree, certificate, professional standing, or skill, and who, by knowledge, training, and experience, has demonstrated the ability to deal with problems relating to a particular subject matter, work, or project. [**1451,** 2002]

--`,,```,,,,````-`-`,,`,,`,`,,`---

Copyright National Fire Protection Association
Provided by IHS under license with NFPA
No reproduction or networking permitted without license from IHS

Not for Resale

3.3.80 Ramp Breakover Angle. The angle measured between two lines tangent to the front and rear tire static loaded radius, and intersecting at a point on the underside of the vehicle that defines the largest ramp over which the vehicle can roll.

3.3.81 Rated Capacity (Water Pump). The flow rate to which the pump manufacturer certifies compliance of the pump when it is new. [**1901,** 2003]

3.3.82 Readily Accessible. Able to be located, reached, serviced, or removed without removing other components or parts of the apparatus and without the need to use special tools to open enclosures. [**1901,** 2003]

3.3.83 Reserve Capacity. The ability of a battery to sustain a minimum electrical load in the event of a charging system failure or a prolonged charging system deficit. [**1901,** 2003]

3.3.84 Sign. A visual indication whether in pictorial or word format that provides a warning to the operator or other persons near the apparatus. [**1901,** 2003]

3.3.85* Slip-On Fire-Fighting Module. A self-contained unit that includes an auxiliary engine-driven pump, piping, a tank, and hose storage that is designed to be placed on a truck chassis, utility bed, flatbed, or trailer of sufficient carrying capacity.

3.3.86 Slow-Operating Valve. A valve that has a mechanism to prevent movement of the flow-regulating element from the fully closed position to the fully opened position or vice versa in less than 3 seconds. [**1901,** 2003]

3.3.87 Split Shaft PTO. A power takeoff (PTO) drive system that is inserted between the chassis transmission and the chassis drive axle and that has the shift mechanism necessary to direct the chassis engine power either to the drive axle or to a fire pump or other accessory. [**1901,** 2003]

3.3.88 Standard Cubic Feet per Minute (SCFM). An expression of airflow rate in which the airflow rate is corrected to standard temperature and pressure. Standard temperature is 60°F (15°C) and standard pressure is 14.696 psi (101.33 kPa) or 29.92 in. Hg (760 mm Hg).

3.3.89 Suction Lift. The sum of the vertical lift and the friction and entrance loss caused by the flow through the intake strainers and hose expressed in feet of water (meters of water) head. [**1901,** 2003]

3.3.90 Sump. A recessed area of a tank assembly designed primarily to entrap sludge or debris for removal and to serve as a central liquid collection point. [**1901,** 2003]

3.3.91 Swash Partition. A vertical wall within a tank structure designed to control the unwanted movement of the fluid within that tank. [**1901,** 2003]

3.3.92 Turning Clearance Radius. One-half the larger of the left or right full circle wall-to-wall turning diameter. [**1901,** 2003]

3.3.93 Wildland Fire Apparatus. Fire apparatus designed for fighting wildland fires that is equipped with a pump having a capacity normally between 10 gpm and 500 gpm (38 L/min and 1900 L/min), a water tank, limited hose and equipment, and that has pump-and-roll capability.

Chapter 4 General Requirements

4.1 General.

4.1.1 All wildland fire apparatus shall meet the requirements of the following chapters:

(1) Chapter 1, "Administration"
(2) Chapter 2, "Referenced Publications"
(3) Chapter 3, "Definitions"
(4) Chapter 4, "General Requirements"
(5) Chapter 5, "Chassis and Vehicle Components"
(6) Chapter 6, "Low-Voltage Electrical Systems and Warning Devices"
(7) Chapter 7, "Driving and Crew Areas"
(8) Chapter 8, "Body, Compartments, and Equipment Mounting"
(9) Chapter 9, "Water Pumps"
(10) Chapter 11, "Water Tanks"
(11) Chapter 12, "Equipment Carried on Wildland Fire Apparatus"

4.1.2 If the water pump is driven by a separate engine, the water pump engine shall meet the requirements of Chapter 10.

4.1.3 If the apparatus is equipped with a foam proportioning system, the system shall meet the requirements of Chapter 13.

4.1.4 If the apparatus is equipped with a compressed air foam system (CAFS), the system shall meet the requirements of Chapter 14.

4.1.5 If the apparatus is equipped with a chassis mounted winch, the winch shall meet the requirements of Chapter 15.

4.1.6 If the apparatus is equipped with a vehicle protection system, the system shall meet the requirements of Chapter 16.

4.2 Responsibility of the Purchaser.

4.2.1* It shall be the responsibility of the purchaser to specify the following details of the apparatus:

(1) Its required performance, including operations at elevations above 2000 ft (600 m), or across grades greater than 20 percent, or up and down grades greater than 25 percent, or stationary operations on grades greater than 10 percent
(2) The maximum number of fire fighters to ride within the apparatus
(3) Specific electrical loads that are to be part of the minimum continuous electrical load defined in 6.3.3
(4) Any hose, ground ladders, or equipment to be carried by the apparatus that exceed the minimum requirements of this standard
(5) If the vehicle is to be equipped to call for or block right-of-way on public highways
(6) Any special arrangements or locations for tools and equipment to be carried on the fire apparatus

4.2.2* After acceptance of the fire apparatus, the purchaser shall be responsible for ongoing training of its personnel to develop and maintain proficiency regarding the proper and safe use of the apparatus and its associated equipment.

4.3 Responsibility of the Contractor.

4.3.1 The contractor shall provide a detailed description of the apparatus, a list of equipment to be furnished, and other construction and performance details to which the apparatus shall conform.

Copyright National Fire Protection Association
Provided by IHS under license with NFPA
No reproduction or networking permitted without license from IHS
Not for Resale

4.3.1.1 The detailed description of the apparatus shall include, but shall not be limited to, estimated in-service weight, wheelbase, turning clearance radius, principal dimensions, angle of approach, angle of departure, ramp breakover angle, transmission, and axle ratios, if applicable.

4.3.1.2 The purpose of these contractor specifications shall be to define what the contractor intends to furnish and deliver to the purchaser.

4.3.2 Responsibility for the apparatus and equipment shall remain with the contractor until they are accepted by the purchaser.

4.4 Legal Requirements. The apparatus shall comply with all applicable federal and state or provincial laws and regulations.

4.5 Manufacturer Certification of Test Results. Where this standard requires the results of tests or the performance of a component to be certified by the manufacturer, the manufacturer shall meet the requirements of this section.

4.5.1 A representative of the manufacturer shall witness all tests and shall refuse to certify any test results for a system unless all components of that system requiring testing pass the testing required by this standard.

4.5.2 There shall be no conditional, temporary, or partial certification of test results.

4.5.3 The manufacturer shall have the facilities and equipment necessary to conduct the required testing, a program for the calibration of all instruments, and procedures to ensure the proper control of all testing.

4.5.4 Appropriate forms or data sheets shall be provided and used during the testing.

4.5.5 Programs shall be in place for training, proficiency testing, and performance verification of any personnel involved with certification.

4.5.6 An official of the company that manufactures or installs the product or component shall designate in writing who is qualified to witness tests and certify results.

4.6 Personnel Protection.

4.6.1* Guards, shields, or other protection shall be provided where necessary in order to prevent injury of personnel by hot, moving, or rotating parts during nonmaintenance operations.

4.6.2 Electrical insulation or isolation shall be provided where necessary in order to prevent electrical shock from onboard electrical systems.

4.6.3 Vehicular workmanship shall ensure an operating environment free of accessible sharp projections and edges.

4.6.4 Safety-related (caution, warning, danger) signs shall meet the requirements of NEMA Z535.4, *Standard for Product Safety Signs and Labels*.

4.7 Controls and Instructions.

4.7.1 Illumination shall be provided for controls, switches, instruction plates, gauges, and instruments necessary for the operation of the apparatus and the equipment provided on it.

4.7.1.1 If external illumination is provided, it shall be a minimum of 5 fc (50 lx) on the face of the device.

4.7.1.2 If internal illumination is provided, it shall be a minimum of 4 footlamberts (14 candela/m^2).

4.7.2* All required signs, plates, and labels shall be permanent in nature and securely attached and shall meet the requirements of 4.6.4 and UL 969, *Standard for Marking and Labeling Systems*.

4.7.2.1 The signs, plates, and labels shall have resistance to damage from temperatures between –30°F and 176°F (–35°C and 80°C) and exposure to oil, fuel, water, hydraulic fluids, or other fluids used on the apparatus.

4.7.2.2 The exterior mounted labels relating to safety or critical operational instructions shall be reflective or illuminated as required by 4.7.1.

4.7.3 No gauge or visual display shall be more than 84 in. (2.1 m) above the level where the operator stands to read the instrument.

4.7.4 The central midpoint or centerline of any control shall be no more than 72 in. (1.8 m) vertically above the ground or platform that is designed to serve as the operator's standing position.

4.8 Component Protection.

4.8.1* Hydraulic hose lines, air system tubing, control cords, and electrical harness lines shall be mechanically attached to the frame or body structure of the apparatus.

4.8.2 The type of equipment described in 4.8.1 shall be furnished with protective looms, grommets, or other devices at each point where they pass through body panels or structural members or wherever they lie against a sharp metal edge.

4.8.3 A through-the-frame connector shall be permitted to be used in place of metal protective looms or grommets.

4.9 Vehicle Stability.

4.9.1* When the apparatus is loaded to its GVWR, with test weight distributed as close as practical to the intended in-service configuration, it shall meet one of the following two criteria:

(1) The calculated center of gravity shall be no higher than 75 percent of the rear vehicle axle track width for a vehicle with a GVWR of 33,000 lb (14,969 kg) or less, and 85 percent of the rear vehicle axle track width for a vehicle with a GVWR greater than 33,000 lb (14,969 kg). The rear vehicle axle track width shall be measured from the center of the rear wheel assembly on one side of the vehicle to the center of the rear wheel assembly on the other side.
(2) When the fire apparatus is tested once in each direction in accordance with SAE J2180, *A Tilt Table Procedure for Measuring the Static Rollover Threshold for Heavy Trucks*, the fire apparatus shall be able to be tilted to 30° before lifting a front or rear tire if the vehicle has a GVWR of 33,000 lb (14,969 kg) or less, and tilted to 27 degrees before lifting a front or rear tire if the GVWR is greater than 33,000 lb (14,969 kg).

4.9.2 Weight Distribution.

4.9.2.1* When the apparatus is loaded to its estimated in-service weight, the front-to-rear weight distribution shall be within the limits set by the chassis manufacturer.

4.9.2.2 The front axle loads shall not be less than the minimum axle loads specified by the chassis manufacturer, under full load and all other loading conditions.

Copyright National Fire Protection Association
Provided by IHS under license with NFPA
No reproduction or networking permitted without license from IHS
Not for Resale

4.9.3 Load Distribution.

4.9.3.1* Using the information supplied by the purchaser, the apparatus manufacturer shall calculate the load distribution for the apparatus.

4.9.3.2 The manufacturer shall engineer the fire apparatus to comply with the gross axle weight rating (GAWR), the overall gross vehicle weight rating (GVWR), and the chassis manufacturer's load balance guidelines.

4.9.3.3* The fire apparatus, when loaded to its estimated in-service weight, shall have a side-to-side tire load variation of no more than 7 percent of the total tire load for that axle.

4.10 Fire Apparatus Performance.

4.10.1* The fire apparatus shall meet the requirements of this standard at elevations of 2000 ft (600 m) above sea level.

4.10.2* The fire apparatus shall meet all the requirements of this standard while stationary on a grade of 10 percent in any direction.

4.10.3* The fire apparatus shall meet the requirements of this standard in ambient temperature conditions between 32°F (0°C) and 110°F (43°C).

4.11 Roadability.

4.11.1 The fire apparatus, when loaded to its estimated in-service weight, shall be capable of the following performance while on dry, paved roads that are in good condition:

(1) From a standing start, the apparatus shall attain a speed of 35 mph (55 km/hr) within 25 seconds on a level road.
(2)*If the apparatus is designed to respond on public roads, it shall attain a minimum top speed of 50 mph (80 km/hr) on a level road.
(3)*The apparatus shall be able to maintain a speed of at least 20 mph (32km/hr) on any grade up to and including 6 percent.

4.11.2* The vehicle shall be capable of maneuvering across a 20 percent grade and up and down a 25 percent grade.

4.11.3* The maximum top speed of the apparatus shall not exceed the tire manufacturer's continuous maximum speed rating for the tires installed on the apparatus.

4.12 Serviceability.

4.12.1 The fire apparatus shall be designed so that all the manufacturer's recommended routine maintenance checks of lubricant and fluid levels can be performed by the operator without lifting the cab of a tilt-cab apparatus or without the need for hand tools.

4.12.2 Where special tools are required for routine service on any component of the apparatus, such tools shall be provided with the apparatus.

4.12.3 Apparatus components that interfere with repair or removal of other major components shall be attached with fasteners, such as cap screws and nuts, so that the components can be removed and installed with ordinary hand tools. These components shall not be welded or otherwise permanently secured into place.

4.12.4 At least two copies of a complete, detailed operation and service manual for the apparatus shall be provided. This manual shall include the chassis, pump, wiring diagrams, lubrication charts, and fire-fighting equipment for that apparatus.

4.13 Road Tests.

4.13.1 Road tests shall be conducted in accordance with this section to verify that the completed fire apparatus is capable of compliance with Section 4.11.

4.13.2 The tests shall be conducted at a location and in a manner that does not violate local, state or provincial, or federal traffic laws.

4.13.3 The tests shall be conducted on dry, level, paved roads that are in good condition.

4.13.4 The apparatus shall be loaded to its estimated in-service weight.

4.13.5 The engine shall not operate in excess of the maximum governed speed.

4.13.6 Acceleration tests shall consist of two runs in opposite directions over the same route.

4.13.6.1 The fire apparatus shall attain a speed of 35 mph (55 km/hr) from a standing start within 25 seconds.

4.13.6.2 If the fire apparatus is designed to respond on public roads as an emergency vehicle, it shall attain a minimum top speed of 50 mph (80 km/hr).

4.13.7 If the apparatus is equipped with an auxiliary braking system, the manufacturer shall road test the system to confirm that the system is functioning as intended by the auxiliary braking system manufacturer.

4.13.8 If the apparatus is equipped with an air brake system, the service brakes shall bring the apparatus, when loaded to its GVWR, to a complete stop from an initial speed of 20 mph (32.2 km/hr), in a distance not exceeding 35 ft (10.7 m) by actual measurement on a paved, level, dry surface road that is free of loose material, oil, or grease.

4.13.9 If the apparatus is equipped with a hydraulic brake system, the service brakes shall bring the apparatus, when loaded to its GVWR, to a complete stop from an initial speed of 30 mph (48.2 km/hr), in a distance not exceeding 88 ft (26.8 m) by actual measurement on a paved, level, dry surface road that is free of loose material, oil, or grease.

4.14* Tests on Delivery. If acceptance tests are required at the point of delivery, the purchaser shall specify the details of the tests to be performed and they shall not be performed in a manner that requires the apparatus or a component to operate outside its designed operating range.

4.15* Apparatus Certification. The manufacturer or organization responsible for the final assembly of the fire apparatus shall certify that the following criteria have been met:

(1) The weight of the completed apparatus, when loaded to its estimated in-service weight, does not exceed the GVWR and GAWR of the chassis.
(2) The complete unit, when loaded to its estimated in-service weight, meets the weight distribution and vehicle stability requirements, as defined in Section 4.9.
(3)*The unit meets all required federal standards pertaining to the manufacture and completion of the fire apparatus, and a label or tag has been affixed to the apparatus by the manufacturer stating the same.

4.16* Documentation. Any documentation provided with the apparatus shall be permitted to be in printed format, electronic format, audiovisual format, or a combination thereof.

Copyright National Fire Protection Association
Provided by IHS under license with NFPA
No reproduction or networking permitted without license from IHS
Not for Resale

4.17 Data Required of the Contractor.

4.17.1 Fire Apparatus Documentation. The contractor shall supply, at the time of delivery, at least one copy of the following documents:

(1) The manufacturer's record of apparatus construction details, including the following information:
   (a) Owner's name and address
   (b) Apparatus manufacturer, model, and serial number
   (c) Chassis make, model, and serial number
   (d) GAWR of front and rear axles and GVWR
   (e) Front tire size and total rated capacity in pounds (kilograms)
   (f) Rear tire size and total rated capacity in pounds (kilograms)
   (g) Chassis weight distribution in pounds (kilograms) with water and manufacturer mounted equipment (front and rear)
   (h) Engine make, model, serial number, rated horsepower and related speed, and governed speed
   (i) Type of fuel and fuel tank capacity
   (j) Electrical system voltage and alternator output in amps
   (k) Battery make, model, and capacity in cold cranking amps (CCA)
   (l) Chassis transmission make, model, and serial number; and if so equipped, chassis transmission PTO(s) make, model, and gear ratio
   (m) Ratios of all driving axles
   (n) Maximum governed road speed
   (o) Pump make, model, rated capacity in gallons per minute (liters per minute where applicable) and serial number
   (p) Pump transmission make, model, serial number, and gear ratio
   (q) Auxiliary pump make, model, rated capacity in gallons per minute (liters per minute where applicable) and serial number
   (r) Water tank certified capacity in gallons or liters
   (s) Paint manufacturer and paint number(s)
   (t) Company name and signature of responsible company representative
(2) The pump manufacturer's certification of suction capability *(see Section 9.2)*
(3) The pump manufacturer's certification of hydrostatic test *(see 9.4.2)*
(4) The certification of inspection and test by the pump manufacturer or contractor *(see 9.11.1.2)*
(5) Weight documents from a certified scale showing actual loading on the front axle, rear axle(s), and overall fire apparatus (with the water tank full but without personnel, equipment, and hose)
(6) Written load analysis and results of the electrical system performance tests required in Section 6.14
(7) Certification of slip resistance of all stepping, standing, and walking surfaces *(see 8.6.3.5)*
(8) Certification of vehicle side slope stability including the weight distribution assumed for the calculations or as loaded on the vehicle for the tilt table test *(see 4.9.1)*

4.17.2 Operations and Service Documentation.

4.17.2.1 The contractor shall supply, at time of delivery, at least two sets of complete operation and service documentation covering the completed apparatus as delivered and accepted.

4.17.2.2 The documentation shall address at least the inspection, service, and operations of the fire apparatus and all major components thereof.

4.17.2.3 The contractor shall also provide the following documentation for the entire apparatus and each major operating system or major component of the apparatus:

(1) Manufacturer's name and address
(2) Country of manufacture
(3) Source for service and technical information
(4) Parts replacement information
(5) Descriptions, specifications, and ratings of the chassis and pump
(6) Wiring diagrams for low-voltage and line-voltage systems to include the following information:
   (a) Pictorial representations of circuit logic for all electrical components and wiring
   (b) Circuit identification
   (c) Connector pin identification
   (d) Zone location of electrical components
   (e) Safety interlocks
   (f) Alternator-battery power distribution circuits
   (g) *Input/output assignment sheets or equivalent circuit logic implemented in multiplexing systems
(7) Lubrication charts
(8) Operating instructions for the chassis and any major components such as the pump, and any auxiliary systems
(9) Instructions regarding the frequency and procedure for recommended maintenance
(10) Overall apparatus operating instructions
(11) Safety considerations
(12) Limitations of use
(13) Inspection procedures
(14) Recommended service procedures
(15) Troubleshooting guide
(16) Apparatus body, chassis, and other component manufacturer's warranties
(17) Special data required by this standard
(18) Copies of required manufacturer test data or reports, manufacturer certifications, and independent third-party certifications of test results
(19) A material safety data sheet (MSDS) for any fluid that is specified for use on the apparatus

4.17.2.4* The contractor shall deliver with the apparatus all manufacturers' operations and service documents supplied with components and equipment that are installed or supplied by the contractor.

Chapter 5 Chassis and Vehicle Components

5.1* Carrying Capacity. The GAWR and GVWR of the chassis shall be adequate to carry the weight of the fire apparatus when loaded to its estimated in-service weight as defined in 5.1.2.

5.1.1 The manufacturer shall establish the estimated in-service weight during the design of the fire apparatus.

5.1.2 The estimated in-service weight shall include the following:

(1) The chassis, body, and tank(s)
(2) Full fuel, lubricant, and other chassis or component fluid tanks or reservoirs
(3) Full water and other agent tanks

Copyright National Fire Protection Association
Provided by IHS under license with NFPA
No reproduction or networking permitted without license from IHS
Not for Resale

(4)*200 lb (90 kg) in each seating position
(5) 70 lb (32 kg) for each seating position for personal gear unless the purchaser specifies that personal gear is not carried on the apparatus
(6) Fixed equipment such as pumps, aerial devices, generators, reels, and air systems as installed
(7) Ground ladders, suction hose, designed hose load in their hose beds and on their reels
(8) An allowance for miscellaneous equipment that is the greatest of the values shown in Table 5.1.2, a purchaser-provided list of equipment to be carried with weights, or a purchaser-specified miscellaneous equipment allowance

Table 5.1.2 Minimum Miscellaneous Equipment Allowance

Chassis GVWR		Equipment Weight	
lb	kg	lb	kg
5,000–10,000	2,200–4,500	300	135
10,001–15,000	4,501–7,000	500	225
15,001–20,000	7,001–9,000	1,000	455
20,001–26,000	9,001–12,000	1,500	680
>26,000	>12,000	2,000	910

5.1.3 The manufacturer shall engineer and design the fire apparatus such that the completed apparatus, when loaded to its estimated in-service weight, with all movable weights distributed as close as is practical to their intended in-service configuration, does not exceed the gross vehicle weight rating (GVWR).

5.1.4* A final-stage manufacturer's certification of the GVWR, along with a certification of the GAWR, shall be supplied on a label affixed to the vehicle.

5.1.5 The fire apparatus manufacturer shall permanently affix a high-visibility plate in a location visible to the driver while seated.

5.1.5.1* The plate shall show the height of the completed fire apparatus in feet and inches or meters, the length of the completed fire apparatus in feet and inches or meters, and the gross vehicle weight rating (GVWR) in pounds or kilograms.

5.1.5.2 Wording on the plate shall indicate that the information shown was current when the apparatus was manufactured and that, if the overall height changes while the vehicle is in service, the fire department must revise that dimension on the plate.

5.2 Engine and Engine System Design.

5.2.1 Chassis Engine.

5.2.1.1* An engine governor or electronic fuel control system shall be installed that will limit the speed of the engine under all conditions of operation to that speed established by the engine manufacturer, which shall be the maximum governed speed.

5.2.1.2* Automatic engine shutdown systems shall not be permitted unless they are an integral part of the standard engine management system that cannot be disabled.

5.2.1.3 The installation of the engine, transmission, and engine- and transmission-driven accessories (PTOs, etc.) shall meet the engine and transmission manufacturers' installation recommendations for the service intended.

5.2.1.4 Engine Speed Control Device.

5.2.1.4.1* An engine speed control device shall be installed to allow an increase in the engine speed when the apparatus is parked.

5.2.1.4.2* An interlock shall prevent the operation of this engine speed control device unless the parking brake is fully engaged and the transmission is in neutral or park, or unless the engine speed control device is used with chassis engine-driven components, in which case it shall be interlocked with the engagement of those components.

5.2.2 Cooling System.

5.2.2.1* The engine's cooling system shall maintain a temperature in the engine at or below the engine manufacturer's maximum temperature rating under all conditions for which the apparatus is designed.

5.2.2.2 Drain Valves.

5.2.2.2.1 Readily accessible drain valves shall be installed at the lowest point of the cooling system and at such other points as are necessary to permit complete removal of the coolant from the system.

5.2.2.2.2 Drain valves shall be designed such that they will not open accidentally due to vibration or be opened by encountering brush or other objects.

5.2.2.3 The radiator shall be mounted to prevent the development of leaks caused by twisting or straining where the apparatus operates over uneven ground.

5.2.2.4 Radiator cores shall be compatible with commercial antifreeze solutions.

5.2.3 Lubrication System.

5.2.3.1* The engine shall be provided with an oil filter of the type approved by the engine manufacturer.

5.2.3.2 The engine oil fill-pipe shall be large enough and located so as to allow easy filling.

5.2.3.3 A permanent plate in the driving compartment shall specify the quantity and type of the following fluids used in the vehicle:

(1) Engine oil
(2) Engine coolant
(3) Chassis transmission fluid
(4) Pump transmission lubrication fluid
(5) Pump priming device fluid
(6) Drive axle(s) lubrication fluid
(7) Air-conditioning refrigerant
(8) Air-conditioning lubrication oil
(9) Power steering fluid
(10) Cab tilt mechanism fluid
(11) Transfer case fluid
(12) Equipment rack fluid
(13) CAFS air compressor system lubricant
(14) Front tire cold pressure
(15) Rear tire cold pressure

5.2.4 Fuel and Air Systems.

5.2.4.1 Diesel Engines.

5.2.4.1.1 Air Intake System.

5.2.4.1.1.1* An air filter shall be provided in the engine's air intake system.

Copyright National Fire Protection Association
Provided by IHS under license with NFPA
No reproduction or networking permitted without license from IHS
Not for Resale

5.2.4.1.1.2 Air inlet restriction shall not exceed the engine manufacturer's recommendations.

5.2.4.1.1.3* The air inlet shall be equipped with a means of separating water and burning embers from the air intake system such that burning particulate matter larger than 0.039 in. (1.0 mm) in diameter cannot reach the air filter element.

5.2.4.1.1.4 An air restriction indicator shall be mounted in the driving compartment and visible to the driver.

5.2.4.1.2* The fuel supply lines and fuel filters shall meet the engine manufacturer's recommendations.

5.2.4.1.3 Electric Fuel Priming System.

5.2.4.1.3.1* Where an electric fuel priming system is furnished, the valving and piping shall be arranged and marked with a label so that it can be operated only to reprime the fuel system.

5.2.4.1.3.2 When the system is not being intentionally operated, it shall be isolated from the fuel system and inoperable.

5.2.4.1.3.3 The priming system shall be marked with a label to indicate proper operation.

5.2.4.2 Gasoline Engines.

5.2.4.2.1 Air Intake System.

5.2.4.2.1.1* An air filter shall be provided in the engine's air intake system.

5.2.4.2.1.2 Air inlet restriction shall not exceed the engine manufacturer's recommendations.

5.2.4.2.1.3* The air inlet shall be equipped with a means of separating water and burning embers from the air intake system such that burning particulate matter larger than 0.039 in. (1.0 mm) in diameter cannot reach the air filter element.

5.2.4.2.1.4 An air restriction indicator shall be mounted in the driving compartment and visible to the driver.

5.2.4.2.2 Fuel System.

5.2.4.2.2.1 Fuel lines and filters or strainers that meet the engine manufacturer's recommendations shall be provided.

5.2.4.2.2.2 The fuel line(s) shall be located or protected so as not to be subjected to excessive heating from any portion of an exhaust system.

5.2.4.2.2.3 The line(s) shall be protected from mechanical damage.

5.2.5* Exhaust System.

5.2.5.1 The exhaust piping and discharge outlet shall be located or shielded so as not to expose any portion of the apparatus or equipment to excessive heating.

5.2.5.2 Exhaust pipe discharge shall be directed away from the pump operator's position.

5.2.5.3 Silencing devices shall be provided.

5.2.5.4 Exhaust back pressure shall not exceed the limits specified by the engine manufacturer.

5.2.5.5 Where parts of the exhaust system are exposed so that they are likely to cause injury to operating personnel, protective guards shall be provided.

5.3 Vehicle Components.

5.3.1 Braking System.

5.3.1.1 The vehicle shall be equipped with an all-wheel antilock braking system if such a system is available from the chassis manufacturer.

5.3.1.2 All brakes shall be readily accessible for adjustment.

5.3.1.3 The service brakes and parking brakes shall be applied by independent means.

5.3.1.4 The service brake application valve, when applied, shall operate all the service brakes on the vehicle.

5.3.1.5* Where air-actuated braking systems are provided, they shall include the following:

(1) An automatic moisture ejector
(2) An air drier
(3) A pressure protection valve to prevent air-operated accessories from drawing air from the air brake system when the air system's pressure drops below 80 psi (552 kPa)

5.3.1.6* Parking Brakes.

5.3.1.6.1 Parking brakes shall control the rear wheels, or all wheels, and shall be of the positive, mechanically actuated type.

5.3.1.6.2 When the fire apparatus is loaded to its GVWR, the parking brake system shall hold the apparatus on at least a 20 percent grade.

5.3.1.6.3 A lockup device to retain applied pressure on hydraulically actuated service brake systems or the use of the "park" position on an automatic transmission shall not be substituted for a separate parking brake system.

5.3.1.7* All apparatus with a GVWR of 36,000 lb (16,330 kg) or greater shall be equipped with an auxiliary braking system.

5.3.1.8* Any time a secondary braking device such as transmission retarders and exhaust restriction devices are used, they shall have a switch to turn them off during adverse road conditions.

5.3.2 Suspension and Wheels.

5.3.2.1* Each load-bearing tire and rim of the fire apparatus shall not carry a weight in excess of the recommended load for the operation of truck tires of the size used, as published in the *Tire and Rim Association — Year Book*, or as recommended by the tire manufacturer, when the apparatus is loaded to its GVWR.

5.3.2.2* The minimum ground clearance shall be as specified in Table 5.3.2.2.

5.3.2.3* An angle of approach and an angle of departure of at least 20 degrees shall be maintained at the front and the rear of the vehicle when it is loaded to its GVWR.

Table 5.3.2.2 Under-Vehicle Clearance

Chassis GVWR		Ground Clearance	
lb	**kg**	**in.**	**mm**
5,000–10,000	2,200–4,500	9	230
10,001–15,000	4,501–7,000	12	300
15,001–20,000	7,001–9,000	13	330
>20,000	>9,000	15	380

Copyright National Fire Protection Association
Provided by IHS under license with NFPA
No reproduction or networking permitted without license from IHS
Not for Resale

5.3.2.4 Clearance for tire chains shall be provided in accordance with SAE J683, *Tire Chain Clearance — Trucks, Buses (except Suburban, Intercity, and Transit Buses), and Combinations of Vehicles.*

5.3.2.5 Steering.

5.3.2.5.1 The steering mechanism shall be capable of turning the front wheels to an angle of at least 30 degrees to either the right or left for nondriving front axles, and at least 28 degrees for driving front axles.

5.3.2.5.2 Power steering or power-assisted steering shall be provided.

5.3.3 Power Train.

5.3.3.1* Transmission.

5.3.3.1.1 The transmission shall be rated for heavy duty service and shall be designed to match engine torque and speed to the load demand.

5.3.3.1.2 The transmission shall provide the driver with the selection of individual gears or ranges of gears necessary to meet the performance requirements of this standard.

5.3.3.2 If the pump is driven by the chassis engine, the power train shall meet 5.3.3.2.1 and 5.3.3.2.2.

5.3.3.2.1* All components in the power train, from the engine to the pump, and from the engine to the driving axles, shall be capable of transmitting available torque necessary to power the pump, as installed in the apparatus, for the pump performance rating, without exceeding the component manufacturer's continuous duty torque/speed rating.

5.3.3.2.2 When pumping continuously at its rated pump capacity and pressure as specified in Section 9.1, lubricant temperatures in any power train component installed in the apparatus from the engine to the pump shall not exceed the component manufacturer's recommendation for maximum temperature.

5.3.3.3* The power train shall allow the vehicle to function and operate smoothly at 2 mph (3.2 km/hr).

5.3.4 Fuel Tanks.

5.3.4.1* A minimum of a single original equipment manufacturer fuel tank shall be permitted.

5.3.4.2 The tank fill opening shall be marked with a label indicating the type of fuel to be used.

5.3.4.3 The tank fill piping shall be placed so it is protected from mechanical damage during the normal use of the fire apparatus.

5.3.4.4 The tank and the fill piping shall be located or shielded so that they are not exposed to heat from an exhaust system or other source of ignition on the fire apparatus.

5.3.4.5 Gasoline-fueled chassis shall have fuel withdrawal fittings above the normal fuel level.

5.3.5 Towing Attachment Points.

5.3.5.1 Tow hook(s) or tow eye(s) shall be provided at the front and rear of the apparatus to allow recovery if the apparatus becomes stuck.

5.3.5.2 The tow hook(s) or tow eye(s) shall be attached directly to the frame structure and be arranged so there is clear and unobstructed access to the attachment point.

Chapter 6 Low-Voltage Electrical Systems and Warning Devices

6.1* General. Any low-voltage electrical systems or warning devices installed on the fire apparatus shall be appropriate for the mounting location and intended electrical load and shall meet the specific requirements of this chapter.

6.2 Wiring. All electrical circuit feeder wiring supplied and installed by the fire apparatus manufacturer shall meet the requirements of 6.2.1 through 6.2.8.

6.2.1* The circuit feeder wire shall be stranded copper or copper alloy conductors of a gauge rated to carry 125 percent of the maximum current for which the circuit is protected.

6.2.1.1 Voltage drops in all wiring from the power source to the using device shall not exceed 10 percent.

6.2.1.2 The use of star washers for circuit ground connections shall not be permitted.

6.2.1.3 All circuits shall otherwise be wired in conformance with SAE J1292, *Automobile, Truck, Truck-Tractor, Trailer, and Motor Coach Wiring.*

6.2.2 Wiring and Wire Harness Construction.

6.2.2.1 All insulated wire and cable shall conform to SAE J1127, *Battery Cable;* or SAE J1128, *Low Tension Primary Cable,* type SXL, GXL, or TXL.

6.2.2.1.1 All conductors shall be constructed in accordance with SAE J1127 or SAE J1128, except where good engineering practice dictates special strand construction.

6.2.2.1.2 Conductor materials and stranding, other than copper, shall be permitted if all applicable requirements for physical, electrical, and environmental conditions are met as dictated by the end application.

6.2.2.1.3 Physical and dimensional values of conductor insulation shall be in conformance with the requirements of SAE J1127 or SAE J1128, except where good engineering practice dictates special conductor insulation.

6.2.2.2 The overall covering of conductors shall be moisture-resistant loom or braid that has a minimum continuous rating of 194°F (90°C) except where good engineering practice dictates special consideration for loom installations exposed to higher temperatures.

6.2.3 The overall covering of jacketed cables shall be moisture resistant and have a minimum continuous temperature rating of 194°F (90°C) except where good engineering practice dictates special consideration for cable installations exposed to higher temperatures.

6.2.4 All wiring connections and terminations shall use a method that provides a positive mechanical and electrical connection.

6.2.4.1 The wiring connections and terminations shall be installed in accordance with the device manufacturer's instructions.

6.2.4.2 All terminal strips shall have protective covers or enclosures.

6.2.4.3 Wire nut, insulation displacement, and insulation piercing connections shall not be used.

Copyright National Fire Protection Association
Provided by IHS under license with NFPA
No reproduction or networking permitted without license from IHS
Not for Resale

6.2.5 Wiring shall be restrained to prevent damage caused by chafing or ice buildup, and protected against heat, liquid contaminants, or other environmental factors.

6.2.6* Wiring shall be uniquely identified at least every 2 ft (0.6 m) by color coding or permanent marking with a circuit function code. The identification shall reference a wiring diagram. *[See 4.17.2.3(6).]*

6.2.7 Circuits shall be provided with properly rated low-voltage overcurrent protective devices.

6.2.7.1 Such devices shall be readily accessible and protected against heat in excess of the overcurrent device's design range, mechanical damage, and water spray.

6.2.7.2 Circuit protection shall be accomplished by utilizing fuses, circuit breakers, fusible links, or solid state equivalent devices.

6.2.7.3 If a mechanical-type device is used, it shall conform to one of the following SAE standards:

(1) SAE J156, *Fusible Links*
(2) SAE J553, *Circuit Breakers*
(3) SAE J554, *Electric Fuses (Cartridge Type)*
(4) SAE J1888, *High Current Time Lag Electric Fuses*
(5) SAE J2077, *Miniature Blade Type Electrical Fuses*

6.2.8 Switches, relays, terminals, and connectors shall have a direct current (dc) rating of 125 percent of maximum current for which the circuit is protected.

6.3 Power Supply.

6.3.1 A 12 V or 24 V electrical alternator shall be provided.

6.3.2* The alternator shall have a minimum output at idle to meet the minimum continuous electrical load of the fire apparatus as defined in 6.3.3, at 200°F (93°C) ambient temperature within the engine compartment, and shall be provided with full automatic regulation.

6.3.3 The minimum continuous electrical load shall consist of the total amperage required to simultaneously operate the following in a stationary mode during emergency operations:

(1) The propulsion engine and transmission
(2) All legally required clearance and marker lights, headlights, and other electrical devices except windshield wipers and four-way hazard flashers
(3) The radio(s) at a duty cycle of 10 percent transmit and 90 percent receive (for calculation and testing purposes, a default value of 5 A continuous)
(4) The lighting necessary to produce 5 fc (50 lx) of illumination on all control and instrument panels
(5) The minimum optical warning system required in Section 6.8, where the apparatus is designed to call for or block the right-of-way
(6) The continuous electrical current required to simultaneously operate any water pumps and hydraulic pumps
(7)*Other warning devices and electrical loads defined by the purchaser as critical to the mission of the apparatus

6.3.4* The condition of the low-voltage electrical system shall be monitored by a warning system that provides an audible and visual signal to persons on, in, or near the apparatus of an impending electrical system failure caused by the excessive discharge of the battery set.

6.3.4.1 The charge status of the battery shall be determined either by direct measurement of the battery charge or indirectly by monitoring the electrical system voltage.

6.3.4.2 If electrical system voltage is monitored, the alarm shall sound if the system voltage at the battery drops below 11.8 V for 12 V nominal systems or 23.6 V for 24 V nominal systems for more than 120 seconds.

6.3.5 A voltmeter shall be mounted on the driver's instrument panel to allow direct observation of the system voltage.

6.3.6 Load Management.

6.3.6.1* If the total continuous electrical load exceeds the minimum continuous electrical output rating of the installed alternator(s) operating under the conditions specified in 6.3.2, an automatic electrical load management system shall be required.

6.3.6.2 The minimum continuous electrical loads defined in 6.3.3 shall not be subject to automatic load management.

6.4* Batteries.

6.4.1 Batteries shall be of the high-cycle type.

6.4.2 With the engine off, the battery system shall be able to provide the minimum continuous electrical load for 10 minutes without discharging more than 50 percent of the reserve capacity, and then restart the engine.

6.4.3 The battery system cold cranking amps (CCA) rating shall meet or exceed the minimum CCA recommendations of the engine manufacturer.

6.4.4 The batteries shall be mounted to prevent movement during fire apparatus operation and shall be protected against accumulations of road spray, snow, and road debris.

6.4.4.1 The batteries shall be readily accessible for examination, testing, and maintenance.

6.4.4.2 A means shall be provided for jump-starting the engine if the batteries are not accessible without lifting the cab of a tilt-cab apparatus.

6.4.4.3* Where an enclosed battery compartment is provided, it shall be ventilated to the exterior to prevent the buildup of heat and explosive fumes.

6.4.4.4 The batteries shall be protected against vibration and temperatures that exceed the battery manufacturer's recommendation.

6.4.5* A master body disconnect switch shall be provided to disconnect all electrical loads not provided by the chassis manufacturer.

6.4.5.1 The starter solenoids shall be connected directly to the batteries.

6.4.5.2 Electronic control systems and similar devices shall be permitted to be directly connected to the batteries if so specified by their manufacturer.

6.4.5.3 Rechargeable handlights, radios, and other similar devices shall be permitted to be connected to the electrical system ahead of the master body disconnect switch.

6.4.5.4 The alternator shall be wired directly to the batteries through the ammeter shunt(s) if one is provided.

6.4.5.5 A green "Master Body Disconnect On" indicator that is visible from the driver's position shall be provided.

Copyright National Fire Protection Association
Provided by IHS under license with NFPA
No reproduction or networking permitted without license from IHS
Not for Resale

6.4.6* A sequential switching device shall be permitted to energize the optical warning devices required in 6.3.3 and other high-current devices, provided the switching device shall first energize the electrical devices required in 6.3.3 within 5 seconds.

6.4.7* If an onboard conditioner or charger is supplied, the associated line-voltage electrical power system shall be installed in accordance with NFPA 1901, Chapter 23.

6.5 Starting Device.

6.5.1 An electrical starting device shall be provided for the engine.

6.5.2 Where the electrical starting device is operating under maximum load, the voltage drop of the conductors between the battery and the starting device shall be in accordance with SAE J541, *Voltage Drop for Starting Motor Circuits.*

6.6 Temperature Exposure. Any alternator, electrical starting device, ignition wiring, distributor, or ignition coil shall be moisture resistant and protected such that it is not exposed to a temperature that exceeds the component manufacturer's recommendations.

6.7* Electromagnetic Interference. Electromagnetic interference suppression shall be provided, as required, to satisfy the radiation limits specified in SAE J551/2, *Test Limits and Methods of Measurement of Radio Disturbance Characteristics of Vehicles, Motorboats, and Spark-Ignited Engine-Driven Devices.*

6.8* Optical Warning Devices. Each apparatus that responds on public roads as an emergency vehicle by calling for or blocking the right-of-way from other traffic shall have a system of optical warning devices that meets or exceeds the requirements of this section.

6.8.1 If the vehicle is not equipped to call for or block the right-of-way on a public highway, a sign shall be affixed on the dashboard that reads as follows: "This apparatus is not equipped to call for or block right-of-way on public highways."

6.8.2* The optical warning system shall consist of an upper and lower warning level.

6.8.2.1 The requirements for each level shall be met by the warning devices in that particular level without consideration of the warning devices in the other level.

6.8.3 For the purpose of defining and measuring the required optical performance, the upper and lower warning levels shall be divided into four warning zones.

6.8.3.1 The four zones shall be determined by drawing lines through the geometric center of the apparatus at 45 degrees to a line drawn lengthwise through the geometric center of the apparatus.

6.8.3.2 The four zones shall be designated A, B, C, and D in a clockwise direction with zone A to the front of the apparatus. *(See Figure 6.8.3.2.)*

6.8.4 Each optical warning device shall be installed on the apparatus and connected to the apparatus's electrical system in accordance with the requirements of this standard and the requirements of the manufacturer of the device.

6.8.5 A master optical warning system switch that energizes all of the optical warning devices shall be provided.

6.8.6 The optical warning system on the fire apparatus shall be capable of two separate signaling modes during emergency operations.

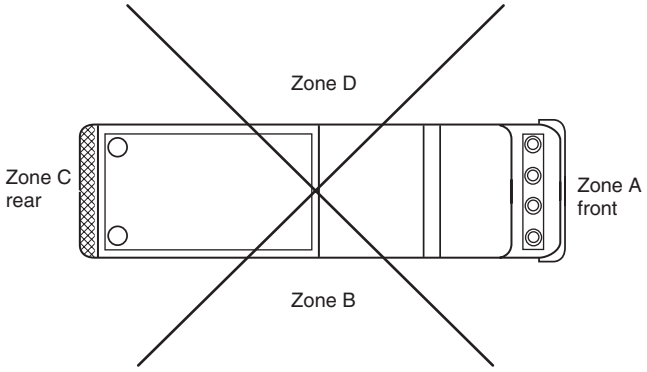

FIGURE 6.8.3.2 Warning Zones for Optical Warning Devices.

6.8.6.1 One mode shall signal to drivers and pedestrians that the apparatus is responding to an emergency and is calling for the right-of-way.

6.8.6.2 One mode shall signal that the apparatus is stopped and is blocking the right-of-way.

6.8.7 A switching system shall be provided that senses the position of the parking brake or the park position of an automatic transmission.

6.8.7.1 When the master optical warning system switch is closed and the parking brake is released or the automatic transmission is not in park, the warning devices signaling the call for the right-of-way shall be energized.

6.8.7.2 When the master optical warning system switch is closed and the parking brake is on or the automatic transmission is in park, the warning devices signaling the blockage of the right-of-way shall be energized.

6.8.7.3* The system shall be permitted to have a method of modifying the two signaling modes.

6.8.8 The optical warning devices shall be constructed or arranged so as to avoid the projection of light, either directly or through mirrors, into any driving or crew compartment(s).

6.8.9 The front optical warning devices shall be placed so as to maintain the maximum possible separation from the headlights.

6.8.10 The optical sources on each level shall be of sufficient number and arranged so that failure of a single optical source does not create a measurement point, in any zone on the same level as the failed optical source, without a warning signal at a distance of 100 ft (30 m) from the geometric center of the apparatus.

6.8.11* Flash Rate.

6.8.11.1 The minimum flash rate of any optical source shall be 75 flashes per minute, and the minimum number of flashes at any measurement point shall be 150 flashes per minute.

6.8.11.1.1 Steady burning nonflashing optical sources shall be permitted to be used.

6.8.11.1.2 The optical energy provided by these nonflashing optical sources shall not be included in the calculations of the zone's total optical power.

Copyright National Fire Protection Association
Provided by IHS under license with NFPA
No reproduction or networking permitted without license from IHS
Not for Resale

6.8.11.2 The flasher of any current-interrupted flashing device shall otherwise meet the requirements of SAE J1690, *Flashers*.

6.8.12* Color of Warning Lights.

6.8.12.1 Permissible colors or combinations of colors in each zone, within the constraints imposed by applicable laws and regulations, shall be as shown in Table 6.8.12.1.

Table 6.8.12.1 Zone Colors

Color	Calling for Right-of-Way	Blocking Right-of-Way
Red	Any zone	Any zone
Blue	Any zone	Any zone
Yellow	Any zone except A	Any zone
White	Any zone except C	Not permitted

6.8.12.2 All colors shall be as specified in SAE J578, *Color Specification*, for red, blue, yellow, or white.

6.8.13* Requirements for Large Apparatus.

6.8.13.1 If an apparatus has a bumper-to-bumper length of 25 ft (7.6 m) or more or has an optical center on any optical warning device greater than 8 ft (2.4 m) above level ground, the requirements of 6.8.13.1 through 6.8.13.6 shall apply.

6.8.13.2 Upper-Level Optical Warning Devices.

6.8.13.2.1 The upper-level optical warning devices shall be mounted as high and as close to the corner points of the apparatus as is practical in order to define the clearance lines of the apparatus.

6.8.13.2.2 The upper-level optical warning devices shall not be mounted above the maximum height specified by the device manufacturer, which gives an intensity value at 4 ft (1.2 m) above level ground and at 100 ft (30.5 m) from the optical warning device, of less than 50 percent of that required at the optical center.

6.8.13.3 Lower-Level Optical Warning Devices.

6.8.13.3.1 In order to define the clearance lines of the apparatus, the optical center of the lower-level optical warning devices in the front of the vehicle shall be mounted forward of the front axle centerline and as close to the front corner points of the apparatus as is practical.

6.8.13.3.2 The optical center of the lower-level optical warning devices at the rear of the vehicle shall be mounted behind the rear axle centerline and as close to the rear corners of the apparatus as is practical.

6.8.13.3.3 The optical center of any lower-level device shall be between 18 in. and 62 in. (460 mm and 1600 mm) above level ground.

6.8.13.4 Midship Optical Warning Devices.

6.8.13.4.1 A midship optical warning device shall be mounted on both the right and left sides of the apparatus if the distance between the front and rear lower-level optical devices exceeds 25 ft (7.6 m) at the optical center.

6.8.13.4.2 Additional midship optical warning devices shall be required, where necessary, to maintain a horizontal distance between the centers of adjacent lower-level optical warning devices of 25 ft (7.6 m) or less.

6.8.13.4.3 The optical center of any midship mounted optical warning device shall be between 18 in. and 62 in. (460 mm and 1600 mm) above level ground.

6.8.13.5* For each operating mode, the combined optical power of all the optical sources shall meet or exceed the zone total optical power requirements shown in Table 6.8.13.5.

6.8.13.6 No individual measurement point shall be less than that shown in Table 6.8.13.5.

6.8.14* Requirements for Small Apparatus.

6.8.14.1 If the apparatus has a bumper-to-bumper length of less than 25 ft (7.6 m) and has the optical center of all optical warning devices at 8 ft (2.4 m) or less above level ground, the requirements of 6.8.14.1 through 6.8.14.5 shall apply.

Table 6.8.13.5 Minimum Optical Power Requirements for Large Apparatus

		Mode of Operation					
		Clearing Right-of-Way			Blocking Right-of-Way		
Zone	Level	H	At any H Point	At any Point 5° Up or 5° Down from H	H	At any H Point	At any Point 5° Up or 5° Down from H
A	Upper	1,000,000	10,000	3,500	400,000	10,000	3,500
B	Upper	400,000	10,000	3,500	400,000	10,000	3,500
C	Upper	400,000	10,000	3,500	800,000	10,000	3,500
D	Upper	400,000	10,000	3,500	400,000	10,000	3,500
A	Lower	150,000	3,750	1,300	150,000	3,750	1,300
B	Lower	150,000	3,750	1,300	150,000	3,750	1,300
C	Lower	150,000	3,750	1,300	150,000	3,750	1,300
D	Lower	150,000	3,750	1,300	150,000	3,750	1,300

Notes:
(1) All values are in candela-seconds/minute.
(2) H = Horizontal plane passing through the optical center.

--`,,```,,,,````-`-`,,`,,`,`,,`---

Copyright National Fire Protection Association
Provided by IHS under license with NFPA
No reproduction or networking permitted without license from IHS
Not for Resale

6.8.14.2 Upper-Level Optical Warning Devices.

6.8.14.2.1 The upper-level optical warning devices shall be mounted as high as practical, but not over 8 ft (2.4 m), at the optical center.

6.8.14.2.2 The upper-level optical warning devices shall be permitted to be combined in one or more enclosures and shall be permitted to be mounted on the cab roof or any other convenient point.

6.8.14.3 Lower-Level Optical Warning Devices.

6.8.14.3.1 One or more lower-level optical warning devices shall be visible from the front and the side of the apparatus.

6.8.14.3.2 The optical center of the lower-level optical warning devices in the front of the vehicle shall be mounted forward of the front wheel centerline and as close to the front corner points of the apparatus as is practical.

6.8.14.3.3 The optical center of the device(s) shall be between 18 in. and 48 in. (460 mm and 1220 mm) above level ground.

6.8.14.4 For each operating mode, the combined optical power of all the optical sources mounted on both the upper and lower levels shall meet or exceed the zone's total optical power requirements shown in Table 6.8.14.4.

6.8.14.5 No individual measurement point shall be less than that shown in Table 6.8.14.4.

6.8.15 Tests of Optical Warning Devices.

6.8.15.1 Mechanical and Environmental Tests.

6.8.15.1.1 All optical warning devices shall be tested to the requirements of SAE J595, *Directional Flashing Optical Warning Devices for Authorized Emergency, Maintenance, and Service Vehicles*, SAE J845, *360 Degree Warning Devices for Authorized Emergency, Maintenance, and Service Vehicles*, SAE J1318, *Gaseous Discharge Warning Lamp for Authorized Emergency, Maintenance, and Service Vehicles*, or SAE J1889, *L.E.D. Signal and Marking Lighting Devices*.

6.8.15.1.2 Optical devices and components designed for mounting only in weatherproof, interior spaces shall be tested in conformance with the applicable SAE standard listed in 6.8.15.1.1 and shall comply with the vibration test and the warpage test for plastic components.

6.8.15.1.3 Optical devices and components designed for mounting on the exterior of the apparatus or in nonweatherproof interior spaces shall be tested in conformance with SAE J845 and shall comply with the following performance requirements of that standard:

(1) Vibration
(2) Moisture
(3) Dust
(4) Corrosion
(5) High temperature
(6) Low temperature
(7) Durability
(8) Warpage

6.8.15.2 Photometric Test Procedures for Optical Devices.

6.8.15.2.1 Testing shall be performed by, or on behalf of, the device manufacturer to ensure compliance with the requirements of 6.8.15.2.2 through 6.8.15.2.5.2.

6.8.15.2.1.1 The results of the testing shall be used by the apparatus builder or purchaser to determine compliance with this standard and all required photometric data shall be available upon request from the optical warning device manufacturer.

6.8.15.2.1.2 The goniometer, integrating photometer, and other equipment used to take the test measurements shall meet the requirements of SAE J1330, *Photometry Laboratory Accuracy Guidelines*.

6.8.15.2.2 The optical source shall be mounted in a goniometer and operated as it would be in a normal system application.

6.8.15.2.2.1 The minimum distance between the light emitting surface of the source being tested and the front face of the photometer detector shall be 59 ft (18 m).

6.8.15.2.2.2 The goniometer shall be oriented and the integrating photometer shall be set to integrate light pulses from the source for 20 seconds.

6.8.15.2.3 For all tests performed with the power applied, the lighting system, or component thereof, shall be operated at 12.8 V ± 0.1 V for 12 V rated equipment and 25.6 V ± 0.2 V for 24 V rated equipment.

Table 6.8.14.4 Minimum Optical Power Requirements for Small Apparatus

	Mode of Operation					
	Clearing Right-of-Way			Blocking Right-of-Way		
Zone	H	At any H Point	At any Point 5° Up or 5° Down from H	H	At any H Point	At any Point 5° Up or 5° Down from H
A	1,000,000	10,000	3,500	400,000	10,000	3,500
B	200,000	8,000	3,500	200,000	8,000	3,500
C	400,000	10,000	3,500	800,000	10,000	3,500
D	200,000	8,000	3,500	200,000	8,000	3,500

Notes:
(1) All values are in candela-seconds/minute.
(2) H = Horizontal plane passing through the optical center.

Copyright National Fire Protection Association
Provided by IHS under license with NFPA
No reproduction or networking permitted without license from IHS
Not for Resale

6.8.15.2.3.1 If the equipment is rated for operation on both 12 V and 24 V, the tests shall be performed at both voltages.

6.8.15.2.3.2 Voltage shall be measured at a point 12 in. ± 1 in. (300 mm ± 25 mm) from the entry into the component.

6.8.15.2.4 The technique described in 6.8.15.2.2 through 6.8.15.2.2.2 shall be performed along the horizontal plane that passes through the optical center beginning at the optical center and repeated at 5 degree intervals to the left and right of the optical center throughout the active horizontal angle of light emission of the optical source.

6.8.15.2.5 Measurements shall be repeated at 5 degrees up and 5 degrees down from the horizontal plane that passes through the optical center, beginning at a point on a line passing through the optical center, and perpendicular to the horizontal plane.

6.8.15.2.5.1 The measurements shall be repeated at 5 degree intervals to the left and right of this vertical line throughout the active horizontal angle of light emission of the optical source.

6.8.15.2.5.2 If the optical warning device contains more than one optical source, the test shall be repeated for each optical source.

6.8.16* Compliance Documentation. The apparatus manufacturer shall demonstrate compliance of the warning system by one of the following methods:

(1) Certification that the system was installed within the geometric parameters specified by the manufacturer of the system, referencing the optical source test reports provided by the manufacturer of the system.
(2) Certification that a mathematical calculation based on test reports for individual optical sources provided by the manufacturer of the devices and performed by a qualified person demonstrates that the combination of individual devices as installed meets the requirements of this standard.
(3) Actual measurement of the lighting system after installation on the apparatus.

6.9 Audible Warning Devices.

6.9.1 Audible warning equipment in the form of at least one automotive traffic horn shall be provided.

6.9.2* If the apparatus responds as an emergency vehicle on public roads, one electric or electronic siren shall be provided.

6.9.2.1 The siren manufacturer shall certify the siren as meeting the requirements of SAE J1849, *Emergency Vehicle Sirens*.

6.9.2.2 A means shall be provided to allow the activation of the siren within convenient reach of the driver.

6.9.3 Where furnished, air horns, electric siren(s), and electronic siren speaker(s) shall be mounted as low and as far forward on the apparatus as is practical.

6.9.4 Audible warning equipment shall not be mounted on the roof of the apparatus.

6.10* Work Lighting. The purchaser shall specify any work lighting required for the mission of the fire apparatus.

6.11 Backup Alarm. An electric or electronic backup alarm shall be provided that meets the Type D (87 dBa) requirements of SAE J994, *Alarm — Backup — Electric, Laboratory Performance Testing*.

6.12 Stop, Tail, and Directional Lights.

6.12.1 The apparatus shall be equipped with all legally required stop, tail, and directional lights.

6.12.2 Directional lights shall be visible from the front, sides, and rear of the apparatus.

6.12.3 On apparatus 30 ft (10 m) or longer in length, a turn signal shall be mounted approximately midway along the apparatus at approximately running board height.

6.12.4 Equipment shall not be mounted in a manner that obscures the stop, tail, or directional lights.

6.13 Electrical System Performance Tests.

6.13.1* The fire apparatus low-voltage electrical system shall be tested as required by this section and the test results certified by the apparatus manufacturer. The certification shall be delivered to the purchaser with the apparatus.

6.13.2 Tests shall be performed when the air temperature is between 0°F and 110°F (–18°C and 43°C).

6.13.3 Test Sequence.

6.13.3.1 The three tests defined in 6.13.3.2 through 6.13.3.4 shall be performed in the order in which they appear.

6.13.3.1.1 Before each test, the batteries shall be fully charged until the voltage stabilizes at the voltage regulator set point and the lowest charge current is maintained for 10 minutes.

6.13.3.1.2 Failure of any of these tests shall require a repeat of the sequence.

6.13.3.2 Reserve Capacity Test.

6.13.3.2.1 The engine shall be started and kept running until the engine and engine compartment temperatures are stabilized at normal operating temperatures and the battery system is fully charged.

6.13.3.2.2 The engine shall be shut off, and the minimum continuous electrical load shall be activated for 10 minutes.

6.13.3.2.3 All electrical loads shall be turned off prior to attempting to restart the engine.

6.13.3.2.4 The battery system shall then be capable of restarting the engine.

6.13.3.2.5 Failure to restart the engine shall be considered a test failure of the battery system.

6.13.3.3 Alternator Performance Test at Idle.

6.13.3.3.1 The minimum continuous electrical load shall be activated with the engine running at idle speed.

6.13.3.3.2 The engine temperature shall be stabilized at normal operating temperature.

6.13.3.3.3 The battery system shall be tested to detect the presence of battery discharge current.

6.13.3.3.4 The detection of battery discharge current shall be considered a test failure.

6.13.3.4 Alternator Performance Test at Full Load.

6.13.3.4.1 The total continuous electrical load shall be activated with the engine running up to the engine manufacturer's governed speed.

6.13.3.4.2 The test duration shall be a minimum of 2 hours.

Copyright National Fire Protection Association
Provided by IHS under license with NFPA
No reproduction or networking permitted without license from IHS
Not for Resale

6.13.3.4.3 Activation of the load management system shall be permitted during this test.

6.13.3.4.4 An alarm sounded by excessive battery discharge as detected by the warning system required in 6.3.4, or a system voltage of less than 11.8 V dc for a 12 V nominal system or 23.6 V dc for a 24 V nominal system, for more than 120 seconds, shall be considered a test failure.

6.13.4 Low-Voltage Alarm Test.

6.13.4.1 The following test shall be started with the engine off and the battery voltage at or above 12 V for a 12 V nominal system or 24 V for a 24 V nominal system.

6.13.4.2 With the engine shut off, the total continuous electrical load shall be activated and shall continue to be applied until the excessive battery discharge alarm activates.

6.13.4.3 The battery voltage shall be measured at the battery terminals.

6.13.4.4 The test shall be considered a failure if the alarm has not yet sounded 140 seconds after the voltage drops to 11.70 V for a 12 V nominal system or 23.4 V for a 24 V nominal system.

6.13.4.5 The battery system shall then be able to restart the engine.

6.13.4.6 Failure to restart the engine shall be considered a test failure.

6.14 Documentation. At the time of delivery, the manufacturer shall provide the following:

(1) Documentation of the electrical system performance tests
(2) A written electrical load analysis, including the following:
  (a) The nameplate rating of the alternator
  (b) The alternator rating under the conditions specified in 6.3.2
  (c) Each of the component loads specified in 6.3.3 that make up the minimum continuous electrical load
  (d) Additional electrical loads that, when added to the minimum continuous electrical load, determine the total continuous electrical load
  (e) Each individual intermittent electrical load

Chapter 7 Driving and Crew Areas

7.1 General.

7.1.1 Each crew riding position shall be within a fully enclosed personnel area.

7.1.2 A label that states the number of personnel the vehicle is designed to carry shall be located in an area visible to the driver.

7.1.3* Each crew riding position shall be provided with a seat and an approved seat belt designed to accommodate a person with or without heavy clothing.

7.1.3.1 If available from the chassis manufacturer, the seat belt webbing shall be bright red in color and the buckle portion of the seat belt shall be mounted on a rigid or semirigid stalk such that the buckle remains positioned in an accessible location.

7.1.3.2 All forward-facing seats adjacent to a side wall shall be provided with a Type 2 pelvic and upper torso restraint-style seat belt assembly conforming to the Federal Motor Vehicle Safety Standard (FMVSS) No. 209, "Seat belt assemblies."

7.1.3.3 All seat belt assembly anchorages shall conform to the Federal Motor Vehicle Safety Standard (FMVSS) No. 210, "Seat belt assembly anchorages."

7.1.3.4 Signs that read "Occupants must be seated and belted when apparatus is in motion" shall be visible from each seated position.

7.1.3.5 Each seating position that is not intended to be used during transit shall be individually labeled as follows:

WARNING: THIS SEAT IS NOT TO BE OCCUPIED WHILE VEHICLE IS IN MOTION.

7.1.3.6 If available from the chassis manufacturer, a seat belt warning device shall be provided.

7.1.3.6.1 The warning device shall consist of an audible alarm that can be heard at all seating positions designed to be occupied while the vehicle is in motion, or a flashing light or lights visible from the driver's seat and the officer's seat.

7.1.3.6.2 The warning device shall be activated any time the parking brake is released or the automatic transmission is not in park or in neutral, and the seat belt of any occupied seat is not fastened or the seat belt of any unoccupied seat is fastened.

7.1.4 Materials used within the driving and crew compartment(s) shall comply with Federal Motor Vehicle Safety Standard (FMVSS) No. 302, "Flammability of interior materials."

7.1.5 All interior crew and driving compartment door handles shall be designed and installed to protect against accidental or inadvertent opening.

7.1.6 All driving and crew compartment doors shall have at least 96 $in.^2$ (62,000 mm^2) of reflective material affixed to the inside of each door.

7.1.7 At any seat location, the maximum noise level shall be 90 dBa without any warning devices in operation, as measured by the test procedure defined in 49 CFR 393.94(c), "Vehicular interior noise levels test procedure," except that the test shall be performed with the vehicle traveling at a steady speed of 45 mph (72 km/hr) on a level, paved, smooth surface road.

7.1.8 Seat Head Height.

7.1.8.1* The minimum vertical dimension from the seat H-point to the ceiling for each belted seating position shall be as follows:

(1) For suspension-style seats with independent height adjustment, the minimum vertical dimension shall be 37 in. (940 mm) measured with the height adjustment in its lowest position and the suspension inflated and/or raised to the upper limit of its travel.
(2) For suspension-style seats without independent height adjustment, the minimum vertical dimension shall be 37 in. (940 mm) measured with the suspension inflated and/or raised to the upper limit of its travel.
(3) For nonsuspension-style seats, the minimum vertical dimension shall be 35 in. (882 mm) measured with the seat adjusted to its lowest position.

7.1.8.2 When independent vertical and/or horizontal seat adjustment is provided, it shall be fully adjustable within 10 seconds.

Copyright National Fire Protection Association
Provided by IHS under license with NFPA
No reproduction or networking permitted without license from IHS
Not for Resale

7.1.8.3 The seat-to-ceiling height shall be measured at the lowest surface in the area immediately above the projected area of the seat as it is moved through its horizontal travel with any soft headliner material depressed by hand.

7.1.9 Seat Arrangement.

7.1.9.1 Each seating space shall have a minimum width of 22 in. (560 mm) at the shoulder level.

7.1.9.2 Seat cushions shall be a minimum of 18 in. (460 mm) in width and 15 in. (380 mm) from the front of the cushion to the face of the seatback.

7.1.9.3 A back cushion that extends from the face of the seat vertically at least 18 in. (460 mm) and that is a minimum of 18 in. (460 mm) wide shall be provided.

7.1.9.3.1 The back cushion shall be permitted to be split to accommodate a fully recessed SCBA and bracket.

7.1.9.3.2 Where the back cushion is split to accommodate an SCBA, a headrest shall be supplied.

7.1.10 SCBA Mounting.

7.1.10.1* Where SCBA units are mounted within a driving or crew compartment, a positive latching mechanical means of holding the SCBA device in its stowed position shall be provided such that the SCBA unit cannot be retained in the mount unless the positive latch is engaged.

7.1.10.2 The bracket-holding device and its mounting shall retain the SCBA unit when subjected to a 9 G force and shall be installed in accordance with the bracket manufacturer's requirements.

7.1.10.3 If the SCBA unit is mounted in a seatback, the release mechanism shall be accessible to the user while seated.

7.1.11 Equipment Mounting.

7.1.11.1 All equipment required to be used during an emergency response shall be securely fastened.

7.1.11.2 All equipment not required to be used during an emergency response, with the exception of SCBA units, shall not be mounted in a driving or crew area unless it is contained in a fully enclosed and latched compartment capable of containing the contents when a 9 G force is applied in the longitudinal axis of the vehicle or a 3 G force is applied in any other direction, or the equipment is mounted in a bracket(s) that can contain the equipment when the equipment is subjected to those same forces.

7.1.12 Steps and access handrails that comply with 8.6.1, 8.6.2, 8.6.3, and Section 8.7 shall be provided as necessary for access to all driving and crew compartments.

7.1.13 Where the crew compartment and the driving compartment are separated, prohibiting direct voice communication, a two-way buzzer or two-way voice intercom system shall be provided.

7.1.14 Means of Escape.

7.1.14.1 Any interior area to be occupied by personnel shall have a minimum of two means of escape.

7.1.14.2 Each opening designed to be an emergency means of escape shall be large enough for a person up to the 95th percentile male as defined in SAE J833, *Physical Human Dimensions*, to escape through.

7.2 Cab Tilt Systems. If the fire apparatus has a cab tilt system, the system shall meet the requirements of 7.2.1 through 7.2.3.2.

7.2.1 If the operation of the cab tilt system is accomplished by hydraulic means, the system shall be equipped with devices to prevent the motion of the cab in the event of any hydraulic hose failure.

7.2.2 If the cab has a powered tilting system, the system shall be interlocked to operate only when the parking brake is engaged and shall be configured so that the failure of a single component will not result in unintentional tilting of the cab.

7.2.3 The control of the cab tilt mechanism shall be accomplished clear of the cab travel area while still having the travel area in clear view.

7.2.3.1 A mechanical means shall be provided to hold the cab in a fully raised position.

7.2.3.2 If the cab is able to be raised to a defined intermediate position, a mechanical means shall also be provided to hold the cab in that intermediate position.

7.3 Driving Compartment.

7.3.1* A fully enclosed driving compartment with seating capacity for not less than two persons shall be provided.

7.3.2 Driver's Seat.

7.3.2.1 The driver's seat shall be readily adjustable by the driver.

7.3.2.2 The seat shall be arranged to accommodate a human conforming to at least the fifth percentile female through 95th percentile male as defined in SAE J833.

7.3.3* The passenger side mirror shall be so mounted that the driver has a clear view of the mirror when the passengers are in their normal seated positions.

7.3.4 Instrumentation and Controls.

7.3.4.1* The following instrumentation and controls shall be mounted in the driving compartment and shall be identified and visible to the driver while seated:

(1) Speedometer
(2) Odometer
(3) Oil pressure indicator or gauge
(4) Coolant temperature indicator or gauge
(5) Automatic transmission temperature indicator or gauge, if applicable and available
(6) Voltmeter
(7) Air pressure gauge(s), if applicable
(8) Turn signal control and indicator lights
(9) Headlight/DOT light switch
(10) High-beam headlight switch and indicator
(11) Fuel level gauge(s)
(12) Heater/defroster controls
(13) Warning lights and siren switches, if applicable
(14) "Master body disconnect on" indicator light
(15) Windshield wipers and windshield washer control
(16) PTO-engaged indicator, if applicable
(17) Pump engagement controls, if applicable

7.3.4.2 Controls and switches that are expected to be operated by the driver while the apparatus is in motion shall be within convenient reach for the driver.

Copyright National Fire Protection Association
Provided by IHS under license with NFPA
No reproduction or networking permitted without license from IHS
Not for Resale

Chapter 8 Body, Compartments, and Equipment Mounting

8.1 Compartmentation.

8.1.1* Any enclosed external compartments shall be weather resistant.

8.1.2 All electrical junctions or wiring within compartments shall be protected from mechanical damage resulting from equipment stored in the compartment.

8.2* Equipment Containment.

8.2.1 Equipment holders or compartments shall be provided for all tools, equipment, and other items that are on the fire apparatus.

8.2.2* Equipment holders shall be attached and shall be designed so that equipment remains in place under all vehicle operating conditions.

8.2.3 All tools and equipment shall be readily accessible.

8.3 Powered Equipment Racks. When a powered equipment rack is provided, it shall meet the requirements of this section.

8.3.1 The equipment rack shall be constructed of materials that are capable of carrying the equipment that is intended to be mounted on the equipment rack.

8.3.2 A lock shall be provided that will retain the equipment rack in the road travel position when the vehicle is in motion.

8.3.3 An interlock shall be provided to prevent operation of the equipment rack unless the apparatus parking brake has been activated.

8.3.4 Controls shall be provided in a position where the operator can visually follow the travel of the equipment rack.

8.3.5 A visual signal shall be provided at the driver's position to indicate that the equipment rack is in motion, or in the down position, and that the parking brake is not engaged.

8.3.6 Flashing lights facing the front and rear of the apparatus shall be provided on the equipment rack and shall be illuminated whenever the equipment rack is in the down position.

8.3.7 The outward ends of the equipment rack that protrude beyond the body of the apparatus shall have reflective material to indicate a hazard or obstruction.

8.4* SCBA Storage. Storage of complete SCBA units or SCBA cylinders shall be arranged so as to prevent damage, injury, or abrasion to the SCBA from other equipment stored in the general area.

8.4.1 If an SCBA unit or cylinder is stored within a driving or crew compartment, the mounting shall comply with the requirements of Section 8.4 and 7.1.10.

8.4.2 If an SCBA cylinder is mounted in a vertical position with the valve down, it shall be supported with a brace or yoke under the cylinder or valve area to prevent downward movement.

8.4.3 The holding or clamping device shall not injure, wear, scrape, or otherwise affect the SCBA unit or cylinder, including damage to the paint or reflective finish, while the cylinder is being placed in, stored in, or removed from the holder.

8.4.4 The SCBA storage area shall be a ventilated, dry area away from all heat sources that could damage the SCBA (e.g., mufflers, engines).

8.4.5* Vertical Storage of SCBA Cylinders in Tubes.

8.4.5.1 The base of the storage tube shall have a rubber, plastic, or similar device to prevent wear on the cylinder and to prevent damage if the cylinder is accidentally dropped into the storage position.

8.4.5.2 Each storage tube shall have a drain to prevent accumulation of moisture.

8.4.6* Horizontal Storage of SCBA Cylinders.

8.4.6.1 The storage rack or tube assembly shall be designed to prevent the cylinder from accidentally sliding out of the storage rack or tube and shall be installed so as to keep the cylinder from hitting or rubbing on compartment doors, by preventing movement or shifting when in transit.

8.4.6.2 The rear wall of each SCBA storage area or tube shall be covered with a rubber, plastic, or similar material to prevent wear on cylinders.

8.5 Pump and Plumbing Access. If the water pump on the wildland fire apparatus is in an enclosed space, the requirements of 8.5.1 through 8.5.5 shall apply.

8.5.1 One or more doors or panels that open or are removable without the use of tools shall be provided to allow visual inspection or access for checking the water pump and plumbing area.

8.5.2 The clear opening shall have no one dimension measure less than 18 in. (460 mm).

8.5.3 Additional door(s) or panel(s) that require no more than standard tools to be opened or removed shall be provided for access to the pump and plumbing area.

8.5.4 All valves, gauges, controls, and other plumbing equipment shall be accessible for service and replacement.

8.5.5* The clear space required by the pump manufacturer to perform in-truck overhaul and maintenance shall be provided.

8.6 Stepping, Standing, and Walking Surfaces.

8.6.1* Steps, platforms, or permanently attached ladders shall be provided so that fire fighters have access to all working and storage areas of the fire apparatus.

8.6.1.1 The maximum stepping height shall not exceed 18 in. (460 mm), with the exception of the ground to first step, which shall not exceed 24 in. (610 mm).

8.6.1.1.1 When it is not possible to maintain the minimum or specified angle of departure using a fixed rear step with the ground-to-first-step height not exceeding 24 in. (610 mm), the first step shall be designed to be movable so as not to be damaged when the vehicle traverses terrain that requires the full angle of departure.

8.6.1.1.2 The ground-to-first-step height shall be determined with the apparatus on level ground.

8.6.1.2* All steps shall have a minimum area of 35 in.^{2} (22,580 mm^2), shall be of such a shape that a 5 in. (125 mm) diameter disk does not overlap any side when placed on the step, and shall be arranged to provide at least 8 in. (200 mm) of clearance between the leading edge of the step and any obstruction.

8.6.1.3 All platforms shall have a minimum depth of 8 in. (200 mm) from the leading edge of the platform to any obstruction.

Copyright National Fire Protection Association
Provided by IHS under license with NFPA
No reproduction or networking permitted without license from IHS
Not for Resale

8.6.1.4 All ladders shall have at least 7 in. (175 mm) of clearance between any rung and the body of the apparatus or other obstruction.

8.6.2 All steps, platforms, or ladders shall be designed and installed to sustain a minimum static load of 500 lb (227 kg) without deformation.

8.6.3* Slip Resistance.

8.6.3.1 All materials used for exterior surfaces designated as stepping, standing, and walking areas and all interior steps shall have a minimum slip resistance in any orientation of 0.68 when tested wet using the English XL tester in accordance with ASTM F 1679, *Standard Test Method for Using a Variable Incidence Tribometer (VIT)*, or 0.52 when tested wet using the Brungraber Mark II tester in accordance with ASTM F 1677, *Standard Test Method for Using a Portable Inclinable Articulated Strut Slip Tester (PIAST)*.

8.6.3.2 All materials used for interior floors shall have a minimum slip resistance in any orientation of 0.58 when tested dry using the English XL tester in accordance with ASTM F 1679 or 0.47 when tested dry using the Brungraber Mark II tester in accordance with ASTM F 1677.

8.6.3.3 A standard Neolite® test sensor shall be used with both the English XL tester and the Brungraber Mark II tester.

8.6.3.4 Sampling Strategy.

8.6.3.4.1 For uniformly patterned materials, at least 16 readings shall be taken on each sample.

8.6.3.4.1.1 Each reading shall be taken 90 degrees clockwise from the previous orientation, resulting in at least four readings in each orientation.

8.6.3.4.1.2 The readings shall be averaged and reported as the slip resistance for the material.

8.6.3.4.2 For directionally patterned materials, at least 32 readings shall be taken on each sample.

8.6.3.4.2.1 Each reading shall be taken 45 degrees clockwise from the previous orientation, resulting in at least four readings in each orientation.

8.6.3.4.2.2 The four readings in each direction shall be averaged and reported as the slip resistance for the material in that orientation.

8.6.3.5 The contractor shall supply at the time of delivery of the apparatus, a certification that all materials used for exterior surfaces designated as stepping, standing, and walking areas; all interior steps; and all interior floors meet the requirements of 8.6.3.

8.6.3.6 Where the fuel fill is located at or near a stepping surface, the surface shall be constructed of an open grate–type material to facilitate draining of accidentally spilled fuel to lessen any slipping hazard.

8.6.4 A sign shall be located on the vehicle at the rear step areas and at any cross walkways to warn personnel that riding in or on these areas while the vehicle is in motion is prohibited.

8.7* Access Handrails.

8.7.1 Access handrails shall be provided at each entrance to a driving or crew compartment and at each position where steps or ladders for climbing are located.

8.7.2 Exterior access handrails shall be constructed of or covered with a slip-resistant, noncorrosive material.

8.7.3 Exterior access handrails shall be between 1 in. and 1⅝ in. (25 mm and 42 mm) in diameter and have a minimum clearance between the handrails and any surface of at least 2 in. (50 mm).

8.7.4 All exterior access handrails shall be designed and mounted to reduce the possibility of hand slippage and to avoid snagging of hose, equipment, or clothing.

8.7.5* Access handrails supplied by the chassis manufacturer on a commercial chassis shall be permitted to be used to meet the requirements of this section.

8.8 Metal Finish.

8.8.1 Where dissimilar metals that pose a galvanic corrosion or reactive threat are to be mounted together, the mounting base material shall have an isolation barrier prior to assembly to prevent dissimilar metal reaction.

8.8.2* Painting.

8.8.2.1* All exposed ferrous metal surfaces that are not plated or stainless steel shall be cleaned and prepared and shall be painted or coated.

8.8.2.2 The paint or coating, including any primer, shall be applied in accordance with the paint or coating manufacturer's recommendation.

8.8.3 A reflective stripe(s) shall be affixed to the perimeter of the apparatus.

8.8.3.1 The stripe, or combination of stripes, shall be a minimum of 4 in. (100 mm) in total width and shall conform to the minimum requirements of ASTM D 4956, *Standard Specification for Retroreflective Sheeting for Traffic Control*, Type I, Class 1 or Class 3.

8.8.3.2* At least 50 percent of the cab and body length on each side, at least 50 percent of the width of the rear, and at least 25 percent of the width of the front of the apparatus shall have the reflective material affixed to it.

8.8.3.3 A graphic design meeting the reflectivity requirements of 8.8.3.1 shall be permitted to replace all or part of the required striping material, if the design or combination thereof covers at least the same perimeter length(s) required by 8.8.3.2.

8.9 Hose Storage. If a hose storage area(s) is provided, it shall comply with this section.

8.9.1* The hose storage area(s) shall be reinforced at the corners.

8.9.2 The bottom shall be made of removable sections fabricated from noncorrosive materials.

8.9.3* The bottom shall be constructed to prevent the accumulation of water and allow for ventilation to aid in drying hose.

8.9.4 The interior shall be smooth and free from all projections, such as nuts, sharp angles, or brackets, that might cause damage to the hose.

8.9.5 Reels, handrails, ladders, and equipment holders shall be placed so as not to obstruct the laying or removal of hose from the storage area.

Copyright National Fire Protection Association
Provided by IHS under license with NFPA
No reproduction or networking permitted without license from IHS
Not for Resale

8.9.6 If suction hose is to be carried, space shall be provided for carrying the suction hose.

8.9.7* Any hose storage area shall be equipped with a positive means to prevent unintentional deployment of the hose from the top, sides, front, and rear of the hose storage area while the apparatus is underway in normal operations.

8.9.8* If a hose reel is provided, it shall be equipped with a brake.

8.9.8.1 The hose reel shall have a capacity of not less than 100 ft (30 m) of ¾ in. (19 mm) booster hose.

8.9.8.2 When the reel is equipped with over 100 ft (30 m) of hose, the reel shall have power rewind capability.

8.10* Receivers and Anchors for Rope and Removable Winches.

8.10.1 Receivers or anchors installed at any location on the apparatus for use as removable winch anchors shall be designed and affixed to provide at least a 1.5-to-1 safety factor over the load rating of the removable winch.

8.10.2 Receivers or anchors installed at any location on the apparatus for use with rope operations shall be designed and affixed to the apparatus to provide at least a 5-to-1 safety factor over the breaking strength of the rope that will be used.

8.10.3 A label shall be placed on or near each receiver or anchor that states the maximum winch load rating and the maximum rope load rating that the receiver or anchor can support.

8.11 Slip-On Fire-Fighting Module. If the pump, piping, and tank are built as a slip-on, self-contained module, it shall meet the requirements of 8.11.1 through 8.11.3 and be mounted on the fire apparatus in accordance with 8.11.4.

8.11.1 The major components of the slip-on module including the pump, pumping engine, water and agent tank(s), plumbing system, and electrical system shall meet the requirements of the applicable chapters of this standard covering those components.

8.11.2 Intake and discharge piping shall not interfere with the routine maintenance of the pump, engine, or auxiliary systems and shall not unduly restrict the servicing of these components.

8.11.3 The manufacturer of a slip-on fire-fighting module shall provide the following data with the module:

(1) Weight without water but with all other tanks or reservoirs for liquids full
(2) Weight full of water and other liquids including foam concentrate, fuel, and lubricants
(3) Horizontal center of gravity when full of water and other liquids
(4) Overall dimensions

8.11.4 Mounting.

8.11.4.1 The slip-on module shall be mounted in a manner that allows access to the engine, pump, and auxiliary systems for routine maintenance.

8.11.4.2 The slip-on module shall be removable using common hand tools.

8.11.4.3 The slip-on module shall be mounted in a manner that prevents damage by vibration.

8.11.4.4* Special anchorage shall be provided on the vehicle chassis and on the slip-on fire-fighting module to secure the fire-fighting module to the vehicle chassis.

8.11.4.5 The anchorage described in 8.11.4.4 shall be designed to prevent movement of the slip-on module during rapid acceleration, deceleration, or side-hill operations.

8.11.4.6 No drilling on chassis frame flanges or welding to chassis frame shall be permitted.

Chapter 9 Water Pumps

9.1 Performance Requirements. Water pumps on wildland fire apparatus shall be classified in one of the following categories:

(1) 100 psi (700 kPa) positive displacement pump
(2) 100 psi (700 kPa) centrifugal pump
(3) 150 psi (1000 kPa) centrifugal pump
(4) 200 psi (1400 kPa) centrifugal pump
(5) 250 psi (1700 kPa) centrifugal pump
(6) 300 psi (2100 kPa) centrifugal pump
(7) 400 psi (2800 kPa) centrifugal pump

9.1.1 If the water pump is a positive displacement design, it shall be rated at 10 gpm (38 L/min) at 100 psi (700 kPa).

9.1.2 If the water pump is to be classified as a 100 psi (700 kPa) centrifugal pump, it shall be capable of delivering one of the flow ratings shown in Table 9.1.2 at 100 psi (700 kPa) net pump pressure and the corresponding flow at 65 psi (450 kPa) net pump pressure.

9.1.3 If the water pump is to be classified as a 150 psi (1000 kPa) centrifugal pump, it shall be capable of delivering one of the flow ratings shown in Table 9.1.3 at 150 psi (1000 kPa) net pump pressure and the corresponding flow at 65 psi (450 kPa) net pump pressure.

Table 9.1.2 Rating Points for a Pump Classified as a 100 psi (700 kPa) Centrifugal Pump

65 psi (450 kPa) net		100 psi (700 kPa) net	
gpm	L/min	gpm	L/min
25	95	10	38
70	265	30	115
100	375	50	190
135	510	70	265
225	850	100	375

Table 9.1.3 Rating Points for a Pump Classified as a 150 psi (1000 kPa) Centrifugal Pump

65 psi (450 kPa) net		150 psi (1000 kPa) net	
gpm	L/min	gpm	L/min
70	265	40	150
150	568	50	190

Copyright National Fire Protection Association
Provided by IHS under license with NFPA
No reproduction or networking permitted without license from IHS
Not for Resale

9.1.4 If the water pump is to be classified as a 200 psi (1400 kPa) centrifugal pump, it shall be capable of delivering one of the flow ratings shown in Table 9.1.4 at 200 psi (1400 kPa) net pump pressure and the corresponding flow at 100 psi (700 kPa) net pump pressure.

Table 9.1.4 Rating Points for a Pump Classified as a 200 psi (1400 kPa) Centrifugal Pump

100 psi (700 kPa) net		200 psi (1400 kPa) net	
gpm	L/min	gpm	L/min
110	416	55	208
200	750	100	375
220	832	150	568

9.1.5 If the water pump is to be classified as a 250 psi (1700 kPa) centrifugal pump, it shall be capable of delivering 150 gpm (568 L/min) at 250 psi (1700 kPa) net pump pressure and 250 gpm at 150 psi (1000 kPa) net pump pressure.

9.1.6 If the water pump is to be classified as a 300 psi (2100 kPa) centrifugal pump, it shall be capable of delivering one of the flow ratings shown in Table 9.1.6 at 300 psi (2100 kPa) net pump pressure and the corresponding flow at 150 psi (1000 kPa) net pump pressure.

Table 9.1.6 Rating Points for a Pump Classified as a 300 psi (2100 kPa) Centrifugal Pump

150 psi (1000 kPa) net		300 psi (2100 kPa) net	
gpm	L/min	gpm	L/min
25	95	10	38
40	150	15	56
100	375	50	190
200	750	100	375
400	1520	200	750
500	1900	200	750

9.1.7 If the water pump is to be classified as a 400 psi (2800 kPa) centrifugal pump, it shall be capable of delivering one of the flow ratings shown in Table 9.1.7 at 400 psi (2800 kPa) net pump pressure and the corresponding flow at 150 psi (1000 kPa) net pump pressure.

Table 9.1.7 Rating Points for a Pump Classified as a 400 psi (2800 kPa) Centrifugal Pump

150 psi (1000 kPa) net		400 psi (2800 kPa) net	
gpm	L/min	gpm	L/min
25	95	10	38
40	150	15	56
100	375	50	190
200	750	100	375
400	1520	200	750
500	1900	250	950

9.2* Pumping Suction Capability. The pump manufacturer shall certify that the pump can deliver its rated capacity at rated net pump pressure from draft, under the following conditions:

(1) An altitude of 2000 ft (600 m) above sea level
(2) Through a single intake with 20 ft (6 m) of suction hose of the size specified in Table 9.2(a) and equipped with a suction hose strainer
(3) With a lift of 10 ft (3 m)
(4) At 29.9 in. Hg (101 kPa) atmospheric pressure (corrected to sea level)
(5) At a water temperature of 60°F (16°C)
(6) Entrance and friction loss for the 20 ft of suction hose and strainer listed in Table 9.2(b) or entrance and friction loss for the 6 m of suction hose and strainer listed in Table 9.2(c)

Table 9.2(a) Suction Hose Size by Rated Capacity

Flow Rate		Suction Hose Size	
gpm	L/min	in.	mm
10	38	1½	38
15	56	1½	38
30	115	1½	38
40	150	2	51
50	190	2	51
55	208	2	51
70	265	2	51
100	375	2½	65
150	568	3	75
200	750	4	100
250	950	4	100

9.3 Priming.

9.3.1* When dry, the pump system (in both parallel and series operation where pumps are of the parallel/series type) shall be capable of taking suction under the conditions specified in Section 9.2 through 20 ft (6 m) of suction hose of the size specified in Table 9.2(a) and a strainer, and discharging water in not more than 30 seconds.

9.3.2 Priming System.

9.3.2.1* The priming system shall use one of the following priming methods:

(1) Prime from the intake with the pump running
(2) Prime from the discharge with the pump not running

9.3.2.2 The priming device shall be capable of operating with no lubricant or with a biodegradable nontoxic lubricant.

9.3.3 Vacuum.

9.3.3.1 The completed pumping system shall be capable of developing a vacuum of 17 in. Hg (57.4 kPa) at an altitude of 2000 ft (600 m), by means of the pump priming system and sustaining the vacuum for at least 5 minutes, with a loss not to exceed 10 in. Hg (34 kPa).

9.3.3.2 The requirement in 9.3.3.1 shall be met with all intake valves open, all intakes capped or plugged, all discharge caps removed, and without the use of the priming device during the 5-minute period.

--`,,```,,,,````-`-`,,`,,`,`,,`---

Copyright National Fire Protection Association
Provided by IHS under license with NFPA
No reproduction or networking permitted without license from IHS
Not for Resale

Table 9.2(b) Friction and Entrance Loss in 20 ft of Suction Hose, Including Strainer

	Suction Hose Size (in.)											
	1½		2		2½		3		4		4½	
Flow Rate (gpm)	ft water	in. Hg	ft water	in. Hg	ft water	in. Hg	ft water	in. Hg	ft water	in. Hg	ft water	in. Hg
10	0.5	0.44										
25	1.8	1.59										
15	0.74	0.65	0.5	0.44								
40	4.1	3.6	1.0	0.9								
30	2.7	2.38	0.75	0.66								
70	11.8	10.42	4.0	3.5								
40	4.1	3.6	1.0	0.9								
70	11.8	10.42	4.0	3.5								
50			1.7	1.50	0.5	0.44						
100			6.2	5.47	2.0	1.77						
50			1.7	1.50	0.5	0.44						
150			9.3	8.21	3.0	2.7						
55			1.9	1.68	0.56	0.49						
110			6.8	6.0	2.2	1.94						
70			4.0	3.5	0.75	0.66						
135			9.8	8.65	3.6	3.18						
100					2.0	1.77	1.6	1.41				
200					8.0	7.06	3.3	2.91				
100					2.0	1.77	1.0	0.88				
225					11.7	10.33	4.7	4.15				
150					3.0	2.7	1.5	1.3				
220					11.4	10.06	4.6	4.06				
150					3.0	2.7	1.5	1.3				
250					13.0	11.47	5.2	4.59				
200									0.8	0.71	0.58	0.51
400									3.2	2.82	2.3	2.03
200									0.8	0.71	0.58	0.51
500									5.0	4.4	3.6	3.2
250									1.3	1.1	0.9	0.8
500									5.0	4.4	3.6	3.2

9.3.4 An automatic method shall be provided to prevent the loss of vacuum through the priming system when the priming device is not being operated.

9.3.4.1 A manual method shall be provided to shut off the priming system to prevent loss of vacuum (preventing backflow) and outflow when the priming device is not in use.

9.3.4.2 If the automatic method to shut off the priming system prevents flow in both directions, a separate manual method shall not be required.

9.3.4.3 The method used to shut off the priming device shall be permitted to be a separate device integrated into the primary control.

9.4* Construction Requirements.

9.4.1* Suitable means shall be provided to completely drain the pump and all lines and accessories in cold weather, or to fill the pump and all lines with antifreeze.

9.4.2 Hydrostatic Test.

9.4.2.1 The pump body shall be subjected to a hydrostatic test pressure of 100 psi (700 kPa) above the maximum close-off pressure or to a gauge pressure of 300 psi (2000 kPa), whichever is higher, for 10 minutes.

9.4.2.2 The pump manufacturer shall provide a certificate of completion for the hydrostatic test.

9.4.3* Wetted moving parts shall be constructed of a corrosion-resistant material.

9.4.4 Where an auxiliary pump is provided in combination with a water pump and where the pumps are interconnected so that pressure from one pump can be transmitted to the other pump, check valves, intake or discharge relief valves, pump drive gear ratios, or other automatic means shall be provided to avoid pressurizing either pump beyond the hydrostatic pressure referenced in 9.4.2.1.

Copyright National Fire Protection Association
Provided by IHS under license with NFPA
No reproduction or networking permitted without license from IHS
Not for Resale

Table 9.2(c) Friction and Entrance Loss in 6 m of Suction Hose, Including Strainer

	Suction Hose Size (mm)											
	38		51		65		75		100		110	
Flow Rate (L/min)	m water	kPa	m water	kPa	m water	kPa	m water	kPa	m water	kPa	m water	kPa
38	0.15	1.5										
95	0.55	5.4										
56	0.23	2.2	0.15	1.5								
150	1.25	12.3	0.30	3.0								
115	0.82	8.1	0.23	2.2								
265	3.60	35.3	1.22	12.0								
150	1.25	12.3	0.30	3.0								
265	3.60	35.3	1.22	12.0								
190			0.52	5.1	0.15	1.5						
375			1.89	18.5	0.61	6.0						
190			0.52	5.1	0.15	1.5						
568			2.83	27.8	0.91	9.0						
208			0.58	5.7	0.17	1.7						
416			2.07	20.3	0.67	6.6						
265			1.22	12.0	0.23	2.2						
510			2.99	29.3	1.10	10.8						
375					0.61	6.0	0.49	4.8				
750					2.44	23.9	1.01	9.9				
375					0.61	6.0	0.15	3.0				
850					3.57	35.0	1.43	14.0				
568					0.91	9.0	0.46	4.5				
832					3.47	34.1	1.40	13.7				
568					0.91	9.0	0.46	4.5				
950					3.96	38.9	1.58	15.5				
750									0.24	2.4	0.18	1.7
1520									0.98	9.6	0.70	6.9
750									0.24	2.4	0.18	1.7
1900									1.5	14.9	1.1	10.8
950									0.4	3.7	0.27	2.7
1900									1.5	14.9	1.1	10.8

9.4.5 The entire discharge and intake piping system, valves, drain cocks and lines, and intake and outlet closures, excluding the tank fill and tank-to-pump lines on the tank side of the valves in those lines, shall be capable of withstanding the same hydrostatic pressure as required in 9.4.2.1 for the pump.

9.4.6 Pump intake plumbing shall be capable of withstanding a minimum vacuum of 17 in. Hg (57.4 kPa) without deforming.

9.5 Pump Intake.

9.5.1* Intakes of the same or larger size as specified in Table 9.2(a) for suction hose size shall be provided.

9.5.1.1* Any intake 1½ in. (38 mm) or larger shall have National Hose Thread (NH).

9.5.1.2 The intake shall have a male thread unless specified otherwise.

9.5.1.3 If the couplings on the suction hose carried on the fire apparatus are of a different size from the pump intake(s) or have means of hose attachment other than that provided on the intake(s), an adapter(s) shall be provided to allow connection of the suction hose to the pump intake(s).

9.5.2 Any 3 in. (76 mm) or larger intake valve except the tank-to-pump valve shall be a slow operating valve.

9.5.3 Each intake shall be provided with piping and a suitable closure that is capable of withstanding 100 psi (690 kPa) over the maximum pump close-off pressure or 300 psi (2070 kPa) gauge pressure, whichever is higher.

9.5.4 Any 2½ in. (65 mm) or larger intake that is located more than 42 in. (1070 mm) above the ground and to which a hose is to be connected shall be equipped with a sweep elbow of at least 30 degrees downward.

9.5.5* Each 2½ in. (65 mm) or larger valved intake shall be equipped with a bleeder valve to bleed off air or water from a hose connected to the intake.

9.5.5.1 The bleeder valve shall be operational without the operator having to get under the apparatus.

Copyright National Fire Protection Association
Provided by IHS under license with NFPA
No reproduction or networking permitted without license from IHS
Not for Resale

9.5.5.2 If a valved appliance is attached to an intake, it shall be equipped with a bleeder valve on each intake.

9.5.6 Intake Closures.

9.5.6.1 Intakes having male threads shall be equipped with caps; intakes having female threads shall be equipped with plugs.

9.5.6.2 Where adapters for special threads or other means for hose attachment are provided on the intakes, closures shall be provided for the adapters in lieu of caps or plugs.

9.5.6.3 Caps or closures for 3½ in. (90 mm) and smaller intakes shall be removable from the intakes but remain secured to the apparatus or pumping unit.

9.5.7 Intake Strainer.

9.5.7.1 Each intake shall have a removable or accessible strainer inside the connection.

9.5.7.2* The strainer(s) shall restrict spherical debris that is too large to pass through the pump.

9.6 Pump Discharge Outlets.

9.6.1* Sufficient discharge outlets, including any discharge outlets located in hose storage areas, shall be provided to discharge the rated capacity of the pump at the flow rates as shown in Table 9.6.1.

Table 9.6.1 Flow Rates for Various Outlet Sizes

Outlet Size		Flow Rates	
in.	mm	gpm	L/min
1	25	50	200
1½	38	125	500
2½	65	250	1000

9.6.2 Each 1½ in. (38 mm) or larger discharge outlet shall be equipped with male National Hose Thread (NH).

9.6.2.1 Adapter couplings with special threads or other means for hose attachment shall be permitted to be furnished on any or all outlets.

9.6.3 Each discharge outlet, except an outlet to which a hose is to be preconnected, shall be equipped with a suitable cap or closure that is capable of withstanding 100 psi (700 kPa) over the maximum rated pump close-off pressure or 300 psi (2000 kPa) gauge pressure, whichever is higher.

9.6.3.1 Where an adapter is provided on a discharge outlet, the closures shall fit on the adapter.

9.6.3.2 If a cap or closure is provided, it shall be secured to the pumping unit with a suitable chain or cable.

9.6.4* Each discharge outlet shall be equipped with a valve that can be opened and closed smoothly at the flows shown in Table 9.6.1 at pump discharge gauge pressures of 250 psi (1700 kPa).

9.6.4.1 The flow-regulating element of each valve shall not change its position under any condition of operation that involves discharge pressures to the maximum pressure of the pump; the means to prevent a change in position shall be incorporated in the operating mechanism and shall be permitted to be manually or automatically controlled.

9.6.4.2* Any 3 in. (76 mm) or larger discharge valve shall be a slow operating valve.

9.6.5 Any 2½ in. (65 mm) or larger discharge outlet that is located more than 42 in. (1070 mm) above the ground and to which a hose is to be connected, but which is not in a hose storage area, shall be equipped with a sweep elbow of at least 30 degrees downward.

9.6.6* An automatic pump cooling/recirculation line of sufficient size to prevent the pump from overheating when no discharge lines are open shall be provided between the pump discharge and the water tank.

9.6.6.1 A check valve shall be included to facilitate priming.

9.6.6.2 Where a foam proportioning system is provided, this line shall be plumbed so the water returning to the water tank is free of foam solution.

9.6.7 If the apparatus is equipped with a booster reel, the piping, valves, and swivel between the pump and booster reel shall be nominally the same size or larger than the nominal inside diameter of the hose to be carried on the reel.

9.6.7.1 A shutoff valve shall be provided between the pump and the reel.

9.6.7.2 High-pressure booster hose of the same nominal size shall be permitted in place of piping.

9.6.8 All discharge valves 1 in. (25 mm) or over in size shall be quarter-turn types.

9.6.9 Where the valve operating mechanism does not indicate the position of the valve, an indicator shall be provided to show when the valve is open.

9.6.10 Visible quarter-turn valves shall be installed so they are open when the handle is parallel with the run of the pipe and are closed when the handle is perpendicular to the run of the pipe.

9.6.11 Blind valves (valves behind panels) shall have their open and closed positions marked — "Open" and "Closed."

9.6.12* When a foam proportioning system is installed, a water-only (no foam) discharge shall be installed.

9.6.13 Operating mechanisms for valves used on the fireground shall be marked as to their function, such as "Intake," "Tank to Pump," "Pump to Tank," and "Discharge."

9.7 Pump Operator's Position.

9.7.1 The pump controls, gauges, and instruments shall be accessed from ground level, a working platform, or a driver's compartment.

9.7.2 All gauges, discharge outlets, pump intakes, and controls shall be illuminated to a minimum lighting level of 5 fc (50 lx).

9.7.3 The control for the priming system shall be capable of being operated by the person operating the controls at the primary pump operator's position.

9.8 Gauges and Instruments.

9.8.1 A master pump compound gauge shall be provided that is visible at the pump operator's position.

Copyright National Fire Protection Association
Provided by IHS under license with NFPA
No reproduction or networking permitted without license from IHS
Not for Resale

9.8.1.1 If an analog gauge is used, it shall meet the following requirements:

(1) The numerals shall be a minimum of ¼ in. (6.4 mm) high.
(2) There shall be graduation lines showing at least every 10 psi (70 kPa), with major and intermediate graduation lines emphasized and figures at least every 100 psi (700 kPa).
(3) The accuracy of the gauge shall be a minimum of Grade B as defined in ASME B40.100, *Pressure Gauges and Gauge Attachments*.

9.8.1.2 If a digital gauge is used, it shall meet the following requirements:

(1) The digits shall be at least ½ in. (12.7 mm) high.
(2) The gauge shall display pressure in increments of not more than 10 psi (70 kPa).
(3) The gauge shall have an accuracy of ±3 percent over the full scale.

9.8.1.3 The gauge shall read from 30 in. Hg (100 kPa) vacuum to at least 100 psi (700 kPa) higher than the maximum pump close-off pressure.

9.8.1.4 The pressure gauge shall be connected directly at the pump discharge, before any check valves.

9.8.2* If the pump on the apparatus is driven by the chassis engine through a PTO, and the apparatus is designed for pump-and-roll operations using that chassis engine–driven pump, a second gauge that meets the same requirements as the compound gauge required by 9.8.1 shall be mounted in the driving compartment in view of the driver.

9.8.3 If one or more 2½ in. (65 mm) or larger external pump intakes are provided, a pump intake gauge shall be provided.

9.8.3.1 If an analog gauge is used, it shall meet the following requirements:

(1) The numerals shall be a minimum of ¼ in. (6.4 mm) high.
(2) There shall be graduation lines showing at least every 10 psi (70 kPa), with major and intermediate graduation lines emphasized and figures at least every 100 psi (700 kPa).
(3) The accuracy of the gauge shall be a minimum of Grade B as defined in ASME B40.100.

9.8.3.2 If a digital gauge is used, it shall meet the following requirements:

(1) The digits shall be at least ½ in. (12.7 mm) high.
(2) The gauge shall display pressure in increments of not more than 10 psi (70 kPa).
(3) The gauge shall have an accuracy of ±3 percent over the full scale.

9.8.3.3 The gauge shall read from 30 in. Hg (100 kPa) vacuum to at least 300 psi (2000 kPa).

9.8.4 If both an intake gauge and a master discharge gauge are provided, a label at the intake gauge shall read "Pump Intake" and a label at the master discharge gauge shall read "Pump Discharge."

9.8.5 Each pressure gauge or flowmeter, and its respective display, shall be mounted and attached so it is protected from accidental damage and excessive vibration.

9.9* Pump Controls.

9.9.1 General Provisions. Provisions shall be made for placing the pump drive system in operation using controls and switches that are identified and within convenient reach of the operator.

9.9.1.1 Where the pump is driven by the chassis engine, and engine compression brakes or engine exhaust brakes are furnished, these engine brakes shall be automatically disengaged for pumping operations.

9.9.1.2* Any control device used in the pumping system power train between the engine and the pump, except a manual pump shift override device if provided, shall be equipped with a means to prevent unintentional movement of the control device from its set position in the pumping mode.

9.9.1.3 A label indicating the chassis transmission shift selector position to be used for pumping shall be provided in the driving compartment and located so that it can be read from the driver's position.

9.9.1.4 Where the pump is driven by the chassis engine and transmission through a split shaft PTO, the driving compartment speedometer shall register when the pump drive system is engaged.

9.9.1.5 Where chassis transmission retarders are furnished, they shall be automatically disengaged for pumping operations.

9.9.2 Stationary Pump Driven Through Split Shaft PTO — Automatic Chassis Transmission. Where the apparatus is equipped with an automatic chassis transmission, the water pump is driven by the chassis engine through the transmission's main driveline, and the apparatus is to be used for stationary pumping only, an interlock system shall be provided to ensure that the pump drive system components are engaged in the pumping mode of operation so that the pumping system can be operated from the pump operator's position.

9.9.2.1* A "Pump Engaged" indicator shall be provided in the driving compartment to indicate that the pump shift process has been successfully completed.

9.9.2.2 An "OK to Pump" indicator shall be provided in the driving compartment to indicate that the pump is engaged, the chassis transmission is in pump gear, and the parking brake is engaged.

9.9.2.3 A "Throttle Ready" indicator shall be provided at the pump operator's panel to indicate that the apparatus is in "OK to Pump" mode or that the chassis transmission is in neutral and the parking brake is engaged.

9.9.3 Stationary Pump Driven Through Split Shaft PTO — Manual Chassis Transmission. Where the apparatus is equipped with a manual chassis transmission, the water pump is driven by the chassis engine through the transmission's main driveline, and the apparatus is to be used for stationary pumping only, an interlock system shall be provided to ensure that the pump drive system components are engaged in the pumping mode of operation so that the pumping system can be operated from the pump operator's position.

9.9.3.1* A "Pump Engaged" indicator shall be provided in the driving compartment to indicate that the pump shift has been successfully completed.

9.9.3.2 An "OK to Pump" indicator shall be provided in the driving compartment to indicate that the pump is engaged and the parking brake is engaged.

9.9.3.3 A "Throttle Ready" indicator shall be provided at the pump operator's panel to indicate that the apparatus is in "OK to Pump" mode or that the parking brake is engaged.

--`,,```,,,,````-`-`,,`,,`,`,,`---

Copyright National Fire Protection Association
Provided by IHS under license with NFPA
No reproduction or networking permitted without license from IHS
Not for Resale

9.9.4 Stationary Pump Driven Through Transmission-Mounted PTO, Front-of-Engine Crankshaft PTO, or Engine Flywheel PTO — Automatic Chassis Transmission. Where the apparatus is equipped with an automatic chassis transmission, the water pump is driven by a transmission-mounted (SAE) PTO, front-of-engine crankshaft PTO, or engine flywheel PTO, and the apparatus is to be used for stationary pumping only with the chassis transmission in neutral, an interlock system shall be provided to ensure that the pump drive system components are engaged in the pumping mode of operation so that the pump system can be operated from the pump operator's position.

9.9.4.1 A "Pump Engaged" indicator shall be provided both in the driving compartment and on the pump operator's panel to indicate that the pump shift has been successfully completed.

9.9.4.2 An "OK to Pump" indicator shall be provided in the driving compartment to indicate that the pump is engaged, the chassis transmission is in neutral, and the parking brake is engaged.

9.9.4.3 A "Throttle Ready" indicator shall be provided at the pump operator's panel to indicate that the apparatus is in "OK to Pump" mode or that the chassis transmission is in neutral and the parking brake is engaged.

9.9.5 Stationary Pump Driven Through Transmission-Mounted PTO, Front-of-Engine Crankshaft PTO, or Engine Flywheel PTO — Manual Chassis Transmissions. Where the apparatus is equipped with a manual chassis transmission, the water pump is driven by a transmission-mounted (SAE) PTO, front-of-engine crankshaft PTO, or engine flywheel PTO, and the apparatus is to be used for stationary pumping only with the chassis transmission in neutral, an interlock system shall be provided to ensure that the pump drive system components are engaged in the pumping mode of operation so that the pump system can be operated from the pump operator's position.

9.9.5.1 A "Pump Engaged" indicator shall be provided both in the driving compartment and on the pump operator's panel to indicate that the pump shift has been successfully completed.

9.9.5.2 An "OK to Pump" indicator shall be provided in the driving compartment to indicate that the pump is engaged and the parking brake is engaged.

9.9.5.3 A "Throttle Ready" indicator shall be provided at the pump operator's panel to indicate that the apparatus is in "OK to Pump" mode or that the parking brake is engaged.

9.9.6 Stationary and "Pump-and-Roll" Pump — Automatic Chassis Transmissions. Where the water pump is driven by a transmission-mounted (SAE) PTO, front-of-engine crankshaft PTO, or engine flywheel PTO, and the apparatus is designed to be used in both the stationary pumping mode and the "pump-and-roll" pumping mode with the automatic chassis transmission in neutral for stationary pumping and in a road gear for pump-and-roll pumping, an interlock system shall be provided to ensure that the pump drive system components are properly engaged in the pumping mode of operation so that the apparatus can be operated in either stationary or pump-and-roll pumping mode.

9.9.6.1 A "Pump Engaged" indicator shall be provided both in the driving compartment and at the pump operator's panel to indicate that the pump shift has been successfully completed.

9.9.6.2 Indicators.

9.9.6.2.1 An "OK to Pump" indicator shall be provided in the driving compartment to indicate that the pump is engaged, the chassis transmission is in neutral, and the parking brake is engaged.

9.9.6.2.2 An "OK to Pump and Roll" indicator shall be provided in the driving compartment and shall be energized when the pump is engaged, the chassis transmission is in road gear, and the parking brake is released.

9.9.6.2.3 When the "OK to Pump and Roll" indicator is energized, the "OK to Pump" indicator shall not be energized.

9.9.6.3 A "Throttle Ready" indicator shall be provided at the pump operator's panel that is energized when the "OK to Pump" indicator is energized or when the chassis transmission is in neutral and the parking brake is engaged.

9.9.7 Stationary and "Pump-and-Roll" Pumps — Manual Chassis Transmissions. Where the water pump is driven by a transmission-mounted (SAE) PTO, front-of-engine crankshaft PTO, or engine flywheel PTO, and the apparatus is designed to be used in both the stationary pumping mode and the "pump-and-roll" pumping mode with the chassis transmission in neutral for stationary pumping or in a road gear for pump-and-roll pumping, an interlock system shall be provided to ensure that the pump drive system components are properly engaged in the pumping mode of operation so that the apparatus can be operated in either stationary or pump-and-roll pumping mode.

9.9.7.1 A "Pump Engaged" indicator shall be provided both in the driving compartment and at the pump operator's panel to indicate that the pump shift has been successfully completed.

9.9.7.2 An "OK to Pump" indicator shall be provided in the driving compartment to indicate that the pump is engaged and the parking brake is engaged.

9.9.7.3 An "OK to Pump and Roll" indicator shall be provided in the driving compartment and shall be energized when the pump is engaged and the parking brake is released.

9.9.7.4 When the "OK to Pump and Roll" indicator is energized, the "OK to Pump" indicator shall not be energized.

9.9.7.5 A "Throttle Ready" indicator shall be provided at the pump operator's panel that is energized when the "OK to Pump" indicator is energized or when the parking brake is engaged.

9.9.8 Stationary Pumps Driven Through Transfer Case PTOs — Automatic Chassis Transmissions. Where the apparatus is equipped with an automatic chassis transmission, the water pump is driven by the chassis engine through the transmission's main driveline and through a transfer case, and the apparatus is to be used for stationary pumping only, an interlock system shall be provided to ensure that the pump drive system components are engaged in the pumping mode of operation so that the pumping system can be operated from the pump operator's position.

9.9.8.1 A "Pump Engaged" indicator shall be provided in the driving compartment to indicate that the pump shift has been successfully completed.

9.9.8.2 An "OK to Pump" indicator shall be provided in the driving compartment to indicate that the pump is engaged, the chassis transmission is in pump gear, the transfer case drive to the chassis wheels is in neutral, and the parking brake is engaged.

Copyright National Fire Protection Association
Provided by IHS under license with NFPA
No reproduction or networking permitted without license from IHS
Not for Resale

9.9.8.3 A "Throttle Ready" indicator shall be provided at the pump operator's panel to indicate that the apparatus is in "OK to Pump" mode or that the chassis transmission is in neutral and the parking brake is engaged.

9.9.9 Stationary Pumps Driven Through Transfer Case PTOs — Manual Chassis Transmissions. Where the apparatus is equipped with a manual chassis transmission, the water pump is driven by the chassis engine through the transmission's main driveline and through a transfer case, and the apparatus is to be used for stationary pumping only, an interlock system shall be provided to ensure that the pump drive system components are engaged in the pumping mode of operation so that the pumping system can be operated from the pump operator's position.

9.9.9.1 A "Pump Engaged" indicator shall be provided in the driving compartment to indicate that the pump shift has been successfully completed.

9.9.9.2 An "OK to Pump" indicator shall be provided in the driving compartment to indicate that the pump is engaged, the transfer case drive to the chassis wheels is in neutral, and the parking brake is engaged.

9.9.9.3 A "Throttle Ready" indicator shall be provided at the pump operator's panel to indicate that the apparatus is in "OK to Pump" mode or that the parking brake is engaged.

9.9.10 Pump Operator's Panel Engine Speed Advancement — Automatic Chassis Transmission. An interlock system shall be provided to prevent advancement of the engine speed at the pump operator's panel unless the chassis transmission is in neutral and the parking brake is engaged or the apparatus is in the "OK to Pump" mode.

9.9.11 Pump Operator's Panel Engine Speed Advancement — Manual Chassis Transmission. An interlock system shall be provided to prevent advancement of the engine speed at the pump operator's panel unless the parking brake is engaged or the apparatus is in the "OK to Pump" mode.

9.9.12 Parallel/Series Control.

9.9.12.1 With parallel/series centrifugal pumps, the control positions for parallel operation (volume) and series operation (pressure) shall be indicated.

9.9.12.2 The control for changing the pump from series to parallel, and vice versa, shall be operable at the pump operator's position.

9.9.13* Pressure Control System.

9.9.13.1* On pumps with a rated capacity of 250 gpm (1000 L/min) or larger, a means shall be provided that, when set in accordance with the manufacturer's instructions, will automatically control the discharge pressure to a maximum of 30 psi (200 kPa) pressure rise above the set pressure(s) when all discharge valves are closed not more rapidly than in 3 seconds and not more slowly than in 10 seconds during the following conditions:

(1) Over a range of pressures from 70 psi to 300 psi (500 kPa to 2000 kPa) net pump pressure with intake gauge pressure between –10 psi and 185 psi (–70 kPa and 1300 kPa) and discharge gauge pressure between 90 psi and 300 psi (620 kPa and 2000 kPa)
(2) With initial engine and pump controls set to produce a range of flows from 150 gpm (550 L/min) to the rated capacity of the pump

9.9.13.2* If the pump is equipped with a relief valve system where the system does not control engine speed, the system shall be equipped with a means to indicate when the system is in control of the pressure.

9.9.13.2.1 If the pump is equipped with a governor system that controls engine speed, an indicator shall show when the system is turned on and whether it is controlling the engine speed or pump pressure.

9.9.13.2.2 Either system shall be controllable by one person at the pump operator position.

9.9.13.3 If the system discharges water to the atmosphere, the discharge shall be in a manner that will not expose personnel to high pressure water streams.

9.9.13.4 Pressure control systems shall not be required on pumping systems whose operating characteristics meet the pressure rise requirements of 9.9.13.1.

9.10* Pump-and-Roll Performance. The vehicle drive engine and drive train shall be arranged so that the pump can deliver at least its rated capacity or 20 gpm (76 L/min), whichever is less at a gauge pressure of 80 psi (552 kPa), while the fire apparatus is moving at 2 mph (3.2 km/hr) or less.

9.11 Required Testing.

9.11.1 General. The pump shall be tested after the pump and all its associated piping and equipment have been installed on the fire apparatus.

9.11.1.1 The testing shall include at least the pumping tests *(see 9.11.2)*, the priming system test *(see 9.11.3)*, the vacuum test *(see 9.11.4)*, the water tank-to-pump flow test *(see 9.11.5)*, the piping integrity test *(see 9.11.6)*, and the water tank capacity test *(see 9.11.7)*.

9.11.1.2 The test results shall be certified by the manufacturer.

9.11.1.3* Test Plate.

9.11.1.3.1 A test plate shall be provided at the pump operator's position that gives the rated discharges and pressures, together with the speed of the engine as determined by the certification test for each unit, the position of the parallel/series pump control, and the governed speed of the engine as stated by the engine manufacturer on a certified brake horsepower curve.

9.11.1.3.2 The plate shall be completely stamped with all information at the factory and attached to the vehicle prior to shipping.

9.11.2 Pumping Tests.

9.11.2.1 Conditions for Tests.

9.11.2.1.1 The test site shall be adjacent to a supply of clear water at least 4 ft (1.2 m) deep, with the water level not more than 10 ft (3 m), or less than 5 ft (1.5 m) below the center of the pump intake, and close enough to allow the suction strainer to be submerged at least 2 ft (0.6 m) below the surface of the water, when connected to the pump by 20 ft (6 m) of suction hose.

9.11.2.1.2* Tests shall be performed when conditions are as follows:

(1) Air temperature: 0°F to 110°F (–18°C to 43°C)
(2) Water temperature: 35°F to 90°F (2°C to 32°C)
(3) Barometric pressure: 29 in. Hg (98.2 kPa), minimum (corrected to sea level)

Copyright National Fire Protection Association
Provided by IHS under license with NFPA
No reproduction or networking permitted without license from IHS
Not for Resale

9.11.2.1.3 Engine-driven accessories shall not be functionally disconnected or otherwise rendered inoperative during the tests.

9.11.2.1.4 All structural enclosures, such as floorboards, gratings, grilles, and heat shields, not furnished with a means for opening them in normal service shall be kept in place during the tests.

9.11.2.2 Equipment.

9.11.2.2.1 Suction hose shall be of the size specified in Table 9.2(a) for the rated capacity of the pump.

9.11.2.2.2 A suction hose and strainer that will allow flow with total entrance and friction loss not greater than that specified in Table 9.2(b) or Table 9.2(c) shall be used.

9.11.2.2.3 One or more lines of fire hose of sufficient diameter shall be provided to allow discharge of the rated capacity of the pump to the nozzle(s) or other flow-measuring equipment, without exceeding a flow velocity of 35 ft/sec (10.7 m/sec) [approximately 193 gpm (730 L/min) for 1½ in. (38 mm) hose or 500 gpm (2000 L/min) for 2½ in. (65 mm) hose].

9.11.2.2.4 Discharge shall be measured using a smoothbore nozzle and pitot tube or other equipment such as flowmeters, volumetric tanks, or weigh tanks.

9.11.2.2.5 Test Gauges.

9.11.2.2.5.1 All test gauges shall meet the requirements for Grade A gauges as defined in ASME B40.100, and shall be at least size 3½, per ASME B40.100.

9.11.2.2.5.2 A mercury manometer shall be permitted to be used in lieu of a pump intake gauge.

9.11.2.2.5.3 The pump intake gauge shall have a range of 30 in. Hg (100 kPa) vacuum to zero for a vacuum gauge or 30 in. Hg (100 kPa) vacuum to a gauge pressure of 150 psi (1000 kPa) for a compound gauge.

9.11.2.2.5.4 The discharge pressure gauge shall have a gauge pressure range of 0 psi to 400 psi (0 kPa to 2800 kPa).

9.11.2.2.5.5 Pitot gauges shall have a gauge pressure range of at least 0 psi to 160 psi (0 kPa to 1100 kPa).

9.11.2.2.5.6 All gauges shall have been calibrated in the year preceding the tests using a dead-weight gauge tester or a master gauge meeting the requirements for Grade 3A or Grade 4A gauges, as defined in ASME B40.100, that has been calibrated within the preceding year.

9.11.2.2.6 Speed-measuring equipment shall consist of a tachometer or other device for measuring revolutions per minute.

9.11.2.3 Procedure.

9.11.2.3.1* The ambient air temperature, water temperature, vertical lift, elevation of test site, and atmospheric pressure (corrected to sea level) shall be determined and recorded prior to the pump test.

9.11.2.3.2 The pump shall be subjected to a 30-minute pumping test consisting of continuous pumping at rated capacity at rated net pump pressure. If the pump is stopped before the test is completed, the entire pump test shall be repeated.

9.11.2.3.3 The discharge volume, discharge pressure, suction pressure, and engine speed shall be recorded at least three times at approximately 15-minute intervals.

9.11.2.3.4 The net pump pressure shall be calculated and recorded based on the average values for discharge and intake pressure.

9.11.2.3.5* The engine, pump, transmission, and all parts of the fire apparatus shall exhibit no undue heating, loss of power, over-speed, leaks, or other defect during the entire test.

9.11.3 Priming System Test. With the apparatus or pumping unit set up for the pumping test, the priming system shall be operated in accordance with the manufacturer's instructions until the pump has been primed and is discharging water.

9.11.3.1 This test shall be permitted to be performed in connection with priming the pump for the pumping test.

9.11.3.2 The interval from the time the priming system is started until the time the pump is discharging water shall be noted.

9.11.3.3 The time required to prime the pump shall not exceed 30 seconds.

9.11.3.4 Only biodegradable products shall be permitted to be discharged onto the ground.

9.11.4 Vacuum Test. The vacuum test shall consist of subjecting the interior of the pump, with all intake valves open, all intakes capped or plugged, and all discharge caps removed, to a vacuum of 17 in. Hg (57.6 kPa) by means of the pump priming system.

9.11.4.1 At altitudes above 2000 ft (600 m), the vacuum attained shall be permitted to be less than 17 in. Hg (57.6 kPa) by 1 in. Hg (3.4 kPa) for each 1000 ft (300 m) of altitude above 2000 ft (600 m).

9.11.4.2 The priming system shall not be used after the 5-minute test period has begun.

9.11.4.3 The engine shall not be operated at any speed greater than the governed speed during this test.

9.11.4.4 The vacuum shall not drop more than 10 in. Hg (34 kPa) in 5 minutes.

9.11.5 Water Tank-to-Pump Flow Test.

9.11.5.1 A water tank-to-pump flow test shall be conducted as follows:

(1) The apparatus shall be placed on level ground and the water tank filled until it overflows.
(2) All intakes to the pump shall be closed.
(3) The tank fill line and bypass cooling line, if supplied, shall be closed.
(4) A hose line(s) and nozzle(s) for discharging water at the rated tank-to-pump flow rate shall be connected to one or more discharge outlets.
(5) The tank-to-pump valve(s) and the discharge valve(s) leading to the hose line(s) and nozzle(s) shall be fully opened.
(6) The engine throttle shall be adjusted until the required flow rate, –0 +5 percent, is established.
(7) The discharge pressure shall be recorded.
(8) The discharge valves shall be closed and the water tank refilled.

Copyright National Fire Protection Association
Provided by IHS under license with NFPA
No reproduction or networking permitted without license from IHS
Not for Resale

(9) The bypass cooling line shall be permitted to be opened temporarily, if needed, to keep the water temperature in the pump within acceptable limits.
(10) The discharge valves shall be fully reopened and the time noted.
(11) If necessary, the engine throttle shall be adjusted to maintain the discharge pressure recorded as noted in 9.11.5.1(7).
(12) When the discharge pressure drops by 10 psi (70 kPa) or more, the time shall be noted and the elapsed time from the opening of the discharge valves shall be calculated and recorded.

9.11.5.2 Volume Discharge Calculation.

9.11.5.2.1 The volume discharged shall be calculated by multiplying the rate of discharge in gallons per minute (liters per minute) by the time in minutes elapsed from the opening of the discharge valves until the discharge pressure drops by at least 10 psi (70 kPa).

9.11.5.2.2 Other means shall be permitted to be used to determine the volume of water pumped from the tank such as a totalizing flowmeter, weighing the truck before and after, or refilling the tank using a totalizing flowmeter.

9.11.5.2.3 The required tank-to-pump flow rate shall be maintained until 80 percent of the rated capacity of the tank has been discharged.

9.11.6 Piping Integrity Test. The pump and its connected piping system shall be hydrostatically tested to a gauge pressure of 250 psi (1700 kPa) or 100 psi (700 kPa) above the maximum pump close-off pressure, whichever is greater, up to 500 psi (3400 kPa).

9.11.6.1 The hydrostatic test shall be conducted with the tank fill line valve, the bypass line valve if so equipped, and the tank-to-pump valve closed.

9.11.6.2 All discharge valves shall be open and the outlets capped.

9.11.6.3 All intake valves shall be closed, and non-valved intakes shall be capped.

9.11.6.4 This pressure shall be maintained for 3 minutes.

9.11.7 Water Tank Capacity Test. The water tank shall be tested for usable water capacity by either a totalizing flowmeter method or truck weight method.

9.11.7.1 The water tank shall be filled until it overflows.

9.11.7.2 If the unit is equipped with an automatic shutdown due to a low pressure feature, the feature shall be engaged.

9.11.7.3 If a totalizing flowmeter is used, the meter shall be connected to a discharge valve and set to zero.

9.11.7.3.1 The discharge valve that the totalizing flowmeter is connected to shall be opened and the unit run at between 25 and 35 percent of the pump's rated flow at 100 psi (700 kPa) until it automatically shuts down or the pressure drops below 30 psi (200 kPa).

9.11.7.3.2 The total volume that was discharged shall be recorded.

9.11.7.4 If the truck weight method is used, the truck shall be weighed and the weight recorded.

9.11.7.4.1 The pump shall be started and brought up to a flow rate of between 25 and 35 percent of the pump's rated flow at 100 psi (700 kPa) by partly opening a discharge valve.

9.11.7.4.2 The discharge valve shall be closed when the unit automatically shuts down or the pump pressure drops below 30 psi (200 kPa).

9.11.7.4.3 The truck shall be reweighed.

9.11.7.4.4 The water tank empty weight shall be subtracted from water tank full weight, and the result divided by 8.33 to obtain the usable water volume in gallons.

Chapter 10 Pump Engines

10.1 General. If a separate pump engine drives the pump, that engine shall meet the requirements of this chapter.

10.2 Engine and Engine System Design.

10.2.1* An engine governor or electronic fuel control system shall be installed that will limit the speed of the engine under all conditions of operation to that speed established by the engine manufacturer; this speed shall be the maximum governed speed.

10.2.2* Automatic engine shutdown systems shall be permitted when they are an integral part of the standard engine management system. They shall also be permitted to automatically shut down the pump drive engine when the pump is out of water, provided the system must be manually armed.

10.3 Cooling System.

10.3.1 The engine shall be air cooled, or liquid cooled with a self-contained cooling system.

10.3.2 The engine's cooling system shall maintain a temperature in the engine at or below the engine manufacturer's maximum temperature rating under all conditions for which the fire apparatus is designed.

10.3.3 If the engine is liquid cooled, the cooling system shall meet the requirements of 10.3.3.1 through 10.3.3.5.

10.3.3.1 If the cooling system is equipped with drain valves, they shall be installed at the lowest point of the cooling system.

10.3.3.2 Drain valves shall be designed such that they will not open accidentally due to vibration or by encountering brush or other objects.

10.3.3.3 The radiator shall be mounted to prevent the development of leaks caused by twisting or straining where the apparatus operates over uneven ground.

10.3.3.4 Radiator cores shall be compatible with commercial antifreeze solutions.

10.3.3.5 A coolant temperature gauge or high-temperature indicator light shall be provided.

10.4 Lubrication System.

10.4.1 The engine oil fill-pipe shall be large enough and located so as to allow easy filling.

10.4.2 If the pump drive engine has a positive pressure lubrication system, a low oil pressure indicator or oil pressure gauge shall be provided that is visible from the pump operator's position.

Copyright National Fire Protection Association
Provided by IHS under license with NFPA
No reproduction or networking permitted without license from IHS
Not for Resale

10.4.3 Clearance or an extension shall be provided so the engine oil can be drained and captured.

10.5 Fuel and Air System.

10.5.1 Diesel Engines.

10.5.1.1 Air Intake System.

10.5.1.1.1* An air filter shall be provided in the engine's air intake system.

10.5.1.1.2 Air inlet restrictions shall not exceed the engine manufacturer's recommendations.

10.5.1.1.3 For engines greater than 35 hp, if approved by the engine manufacturer, the air inlet shall be equipped with a means of separating water and burning embers from the air intake system such that burning particulate matter larger than 0.039 in. (1.0 mm) in diameter cannot reach the air filter element.

10.5.1.2* The fuel supply lines and fuel filters shall meet the engine manufacturer's recommendations.

10.5.1.3 Electric Fuel Priming System.

10.5.1.3.1* Where an electric fuel priming system is furnished, the valving and piping shall be arranged and marked with a label so that it can be operated only to reprime the fuel system.

10.5.1.3.2 When the electric fuel priming system is not being intentionally operated, it shall be isolated from the fuel system and inoperable.

10.5.1.3.3 The priming system shall be marked with a label to indicate proper operation.

10.5.2 Gasoline Engines.

10.5.2.1 Air Intake System.

10.5.2.1.1 An air filter shall be provided in the engine's intake air system.

10.5.2.1.2 Air inlet restrictions shall not exceed the engine manufacturer's recommendations.

10.5.2.1.3 For engines greater than 35 hp, if approved by the engine manufacturer, the air inlet shall be equipped with a means of separating water and burning embers from the air intake system such that burning particulate matter larger than 0.039 in. (1.0 mm) in diameter cannot reach the air filter element.

10.5.2.2 Fuel System.

10.5.2.2.1 All fuel lines and filters or strainers shall meet the engine manufacturer's recommendations.

10.5.2.2.2 The fuel line(s) shall be located or protected so as not to be subjected to excessive heating from any portion of a vehicle exhaust system.

10.5.2.2.3 The line(s) shall be protected from mechanical damage.

10.6 Exhaust System.

10.6.1 The exhaust piping and its discharge shall be located so as not to expose any portion of the apparatus to excessive heating.

10.6.2* Exhaust pipe discharge shall be directed away from the pump operator's position.

10.6.3 The exhaust system shall be provided with an approved spark arrester unless 100 percent of the exhaust gases pass through a turbo charger.

10.6.4 Exhaust back-pressure shall not exceed the limits specified by the engine manufacturer.

10.7 Engine Controls.

10.7.1* A nonkeyed switch to start or stop the pump engine shall be furnished and shall be located at the pump operator's position.

10.7.2 The engine speed shall be permitted to be controlled by an automatic speed controller or a manually adjustable throttle.

10.7.2.1 A hand throttle of a type that holds its set position shall be provided where the pump drive engine is not equipped with an automatic throttle control system to control the engine speed.

10.7.2.2 Where provided, the throttle shall be located so that it can be manipulated from the pump operator's position with all instrumentation in full view.

10.8 Electrical System and Devices.

10.8.1 The electrical system on the pump engine shall meet the requirements of Section 6.2 and 6.4.4 through 6.4.4.4.

10.8.2 Where a separate battery(s) is provided, the requirements of 10.8.2.1 through 10.8.2.3 shall apply.

10.8.2.1 A built-in means to charge the battery(s) shall be provided.

10.8.2.2 The charging system shall have an output adequate to meet the continuous anticipated electrical load of the engine and starting system as manufactured, at 200°F (93°C) operating temperature (within any engine enclosure, if applicable).

10.8.2.3 The charging system shall be provided with full automatic regulation.

10.8.3* Battery power for the separate engine-driven pump shall be permitted to be supplied from the chassis battery(s).

10.9 Starting Device. An electrical starting device shall be provided; its characteristics shall be such that, when operating under maximum load, the voltage drop of the conductors shall be in accordance with SAE J541.

10.10* Fuel Tanks.

10.10.1 The fuel tank(s) shall be of sufficient size to permit operation of the pump at its rated capacity and pressure for at least 1 hour without refilling.

10.10.2* The pump engine shall be permitted to draw fuel from the chassis fuel tank, when done in accordance with the chassis manufacturer's recommendation.

10.10.3 Each fuel tank shall be labeled near the fill opening to indicate the type of fuel.

Copyright National Fire Protection Association
Provided by IHS under license with NFPA
No reproduction or networking permitted without license from IHS
Not for Resale

Chapter 11 Water Tanks

11.1 Tank Capacity. A water tank with a minimum capacity of 50 gal (190 L) shall be provided.

11.2 Tank Construction.

11.2.1 The water tank shall be constructed of noncorrosive material or other materials that are protected against corrosion and deterioration.

11.2.2* The water tank shall have a means to permit cleaning of the tank.

11.2.3* If the water tank is independent of the body and compartments, it shall be equipped with a method for lifting the tank(s) off the chassis.

11.2.4 Tanks shall be cradled, cushioned, spring mounted, or otherwise protected from undue stress resulting from travel on uneven terrain in accordance with the tank manufacturer's requirements.

11.2.5* All water tanks shall be provided with baffles or swash partitions to form containment cells or dynamic water movement control.

11.2.5.1 If a containment method of baffling is used, the baffles shall meet the requirements of 11.2.5.1.1 through 11.2.5.1.4.

11.2.5.1.1 At least one baffle running longitudinal to the axis of the apparatus shall be provided in all water tanks.

11.2.5.1.2 At least one transverse baffle shall be provided in tanks of 100 gal (380 L) or more.

11.2.5.1.3 There shall be a maximum distance of 48 in. (1220 mm) between any combination of tank vertical walls and baffles, or between parallel baffles.

11.2.5.1.4 Each baffle shall cover at least 75 percent of the area of the plane that contains the baffle.

11.2.5.2 If a dynamic method of partitioning is used, the baffles shall meet the requirements of 11.2.5.2.1 through 11.2.5.2.4.

11.2.5.2.1 The tank shall contain vertical transverse and longitudinal partitions.

11.2.5.2.2 The vertical partitions shall be secured to the top and bottom of the tank.

11.2.5.2.3 The longitudinal partitions shall extend a minimum of 75 percent of the tank length.

11.2.5.2.4 The partitions shall be arranged in such a manner that the vertical plane of each partition shall create cells for which no dimension shall exceed 48 in. (1220 mm).

11.2.6 An indicator shall be provided that shows the level or amount of water in the tank(s).

11.3 Tank-to-Pump Intake Line.

11.3.1 A valved tank-to-pump connection shall be provided and shall be capable of flowing water from the tank at the rated capacity of the pump up to 250 gpm (950 L/min).

11.3.2 The valve control shall be located at the pump operator's position.

11.3.3 The flow required in 11.3.1 shall be sustainable while pumping a minimum of 80 percent of the certified tank capacity with the fire apparatus on level ground.

11.4 Filling and Venting.

11.4.1 Fill Opening. A readily accessible, covered fill opening designed to prevent spillage shall be provided.

11.4.1.1 The fill opening shall have a minimum inside diameter of 3¼ in. (83 mm).

11.4.1.2 The cover shall be marked with a label that reads "Water Fill."

11.4.1.3 A screen that is easily removed and cleaned shall be installed in the opening.

11.4.1.4* The cover, or another device, shall open as a vent to release pressure buildup in the tank.

11.4.2* A vent/overflow outlet that is sized to allow water to be drawn from the tank at a rate at least equal to the rated capacity of the pump or 250 gpm (950 L/min), whichever is lower, shall be provided.

11.4.3* Tank Fill Line.

11.4.3.1* A valved tank fill line, sized in accordance with Table 11.4.3.1, shall be provided.

11.4.3.2* The valve shall be capable of regulating flow and shall be controllable from the pump operator's position.

11.5* Water Tank Capacity Certification.

11.5.1 The water tank manufacturer shall certify the capacity of the water tank prior to delivery of the fire apparatus.

11.5.2 The certified capacity shall be recorded on the manufacturer's record of construction *(see 4.17.1)*, and the certification shall be provided to the purchaser when the apparatus is delivered.

Table 11.4.3.1 Size of Tank Fill Line (Pump to Tank)

Pump Size		Tank Size					
		250 gal or less (950 L or less)		251 gal to 999 gal (951 L to 3784 L)		1000 gal or more (3785 L or more)	
gpm	L/min	in.	mm	in.	mm	in.	mm
60 or less	227 or less	¾	19	1	25	1	25
61–120	228–454	1	25	1½	38	1½	38
121 or greater	455 or greater	1	25	1½	38	2	51

Copyright National Fire Protection Association
Provided by IHS under license with NFPA
No reproduction or networking permitted without license from IHS
Not for Resale

Chapter 12 Equipment Carried on Wildland Fire Apparatus

12.1* Suction Hose. If suction hose is provided, the hose shall comply with NFPA 1961, *Standard on Fire Hose*, and a suction strainer shall be furnished.

12.2* Minor Equipment.

12.2.1 Equipment on the following list shall be available on the wildland fire apparatus before the apparatus is placed in service.

(1)*Two solid bottom wheel chocks, mounted in readily accessible locations, each designed to hold the apparatus, when loaded to its GVWR, on a 10 percent grade with the transmission in neutral and the parking brake released
(2) One approved, dry chemical portable fire extinguisher with a minimum 40-B:C rating mounted in a bracket fastened to the apparatus
(3) One first-aid kit
(4) One set of tire tools including a jack and lug wrench, if a spare tire is carried on the apparatus
(5) One reflective triangle kit

12.2.2 Brackets or compartments shall be furnished so as to organize and mount the equipment.

12.2.3 A detailed list of who is to furnish the items and the method for organizing and mounting these items shall be supplied by the purchasing authority.

Chapter 13 Foam Proportioning Systems for Class A Foam Concentrate

13.1* Application. If the wildland fire apparatus is equipped with a foam proportioning system for Class A foam concentrate, the foam proportioning system shall comply with the applicable sections of this chapter.

13.2* Requirements by Type of Foam Proportioning System.

13.2.1* Eductor System. An eductor foam proportioning system shall meet the requirements of 13.3.1 through 13.3.6, 13.3.8, and Sections 13.4, 13.5, 13.6, 13.9, 13.10, and 13.11.

13.2.2* Self-Educting Master Stream Nozzle. A self-educting master stream nozzle shall meet the requirements of Sections 13.3, 13.4, 13.6, 13.9, 13.10, and 13.11.

13.2.3* Intake-Side System. An intake-side foam proportioning system shall meet the requirements of Sections 13.3, 13.4, 13.5, 13.6, 13.9, 13.10, and 13.11.

13.2.4* Around-the-Pump System. An around-the-pump foam proportioning system shall meet the requirements of Sections 13.3, 13.4, 13.5, 13.6, 13.9, 13.10, and 13.11.

13.2.5* Balanced Pressure System. A balanced pressure foam proportioning system shall meet the requirements of Sections 13.3 through 13.11.

13.2.6* Direct Injection System. A direct injection foam proportioning system shall meet the requirements of Sections 13.3, 13.4, 13.5, 13.6, 13.7, 13.9, 13.10, and 13.11.

13.2.7* Water-Powered Direct Injection Foam Proportioning System. A water motor or water turbine foam proportioning system shall meet the requirements of Sections 13.3, 13.4, 13.5, 13.6, 13.7, 13.9, 13.10, and 13.11.

13.3 Design and Performance Requirements of a Foam Proportioning System.

13.3.1* The foam proportioning system shall be capable of proportioning foam concentrate(s) in accordance with the foam concentrate manufacturer's recommendations for the type of foam concentrate used in the system over the system's design range of flow and pressures.

13.3.2 The foam proportioning system water flow characteristics and the range of proportioning ratio(s) shall be specified by the purchaser.

13.3.3 The fire apparatus shall be capable of supplying the power required by the foam proportioning system in addition to the requirements of the other power-dependent systems installed on the apparatus.

13.3.4* Components of the foam proportioning system that are continuously wetted with foam concentrate shall be constructed of materials that will not be damaged in form, fit, or function when exposed to foam concentrates, including the adverse effects of corrosion, formation of harmful solids, deterioration of gaskets and seals, binding of moving parts, and deterioration of the foam concentrate caused by contact with incompatible materials.

13.3.5 The foam proportioning system components that can be flushed with water after use shall be constructed of materials that do not corrode after being flushed with water and allowed to dry. These components shall also be constructed of materials resistant to deterioration by foam concentrates.

13.3.6 The foam concentrate supply line shall not collapse under any operating conditions specified by the manufacturer of the foam proportioning system.

13.3.7 A means shall be provided to prevent water backflow into the foam proportioning system and the foam concentrate storage tank.

13.3.8 A means shall be provided to prevent foam solution backflow through the foam proportioning system into the water source.

13.3.9 A device that consists of a removable element that does not restrict the full flow capacity of the foam concentrate supply line shall be provided on the foam concentrate supply side of the foam proportioning system to prevent any debris that might affect the operation of the foam proportioning system from entering the system.

13.3.10 Flush Lines.

13.3.10.1 A flush line(s) shall be provided as required by the foam proportioning system manufacturer to flush foam concentrate from the system.

13.3.10.2 A means shall be provided in the flush line(s) to prevent water backflow into the foam concentrate tank or water tank during the flushing operation.

13.3.10.3 Where the foam proportioning system is connected to more than one foam concentrate storage tank, provisions shall be made to flush all common lines to avoid contamination of dissimilar foam concentrates.

13.4 Controls for Foam Proportioning Systems.

13.4.1* The foam proportioning system operating controls shall be located at the pump operator's position and shall be identified as required by 13.9.2.

Copyright National Fire Protection Association
Provided by IHS under license with NFPA
No reproduction or networking permitted without license from IHS
Not for Resale

13.4.2 Foam proportioning systems that require flushing after use shall be provided with controls accessible to the operator to completely flush the system with water according to the manufacturer's instructions.

13.4.3 Foam proportioning systems that incorporate foam concentrate metering valves shall have each metering valve calibrated and marked with a plate to indicate the rate(s) of the foam concentrate proportioning available as determined by the design of the system.

13.4.4 Foam proportioning systems that incorporate automatic proportioning features shall be equipped with controls that enable the operator to isolate the automatic feature and operate the system.

13.5 Foam Proportioning System Pressure Gauges, Flowmeters, and Indicators.

13.5.1 The displays of all pressure gauges or flowmeters, and other indicators (e.g., fluid-level indicators) shall be located so that they are visible from the pump operator's position and shall meet the requirements of 4.7.3.

13.5.2 If an analog pressure gauge is used, it shall meet the requirements of 13.5.2.1 through 13.5.2.4.

13.5.2.1 The gauge shall have a minimum accuracy of Grade B as defined in ASME B40.100.

13.5.2.2 Numerals for master gauges shall be a minimum of 5⁄32 in. (4 mm) high.

13.5.2.3 There shall be graduation lines showing at least every 10 psi (70 kPa), with major and intermediate graduation lines emphasized and figures at least every 100 psi (700 kPa).

13.5.2.4 Analog pressure gauges shall be vibration and pressure pulsation dampened; resistant to corrosion, condensation, and shock; and have internal mechanisms that are factory lubricated for the life of the gauge.

13.5.3 If digital pressure gauges are used, they shall meet the requirements of 13.5.3.1 through 13.5.3.3.

13.5.3.1 The digits shall be at least ¼ in. (6.4 mm) high.

13.5.3.2 Digital pressure gauges shall display pressure in increments of not more than 10 psi (70 kPa).

13.5.3.3 Digital pressure gauges shall have an accuracy of ±3 percent over the full scale.

13.5.4 Each pressure gauge or flowmeter and its respective display shall be mounted and attached so it is protected from accidental damage and excessive vibration.

13.6 Atmospheric Foam Concentrate Tank. If the foam proportioning system incorporates an atmospheric foam concentrate tank, the requirements of 13.6.1 through 13.6.12 shall apply.

13.6.1 The foam concentrate tank(s) shall be constructed of noncorrosive materials or other materials that are protected against corrosion or deterioration and that will not be adversely affected by the foam concentrate to be stored in the tank.

13.6.2 Swash Partitions.

13.6.2.1 All foam concentrate tanks shall be provided with swash partitions arranged such that the maximum dimension perpendicular to the plane of any partition shall not exceed 36 in. (900 mm).

13.6.2.2 The swash partition(s) shall extend from wall to wall and cover at least 75 percent of the area of the plane of the partition.

13.6.3 The foam concentrate tank shall be provided with a fill tower or expansion compartment having a minimum area of 12 in.^{2} (7500 mm^2) and having a volume of not less than 1 percent of the total tank volume.

13.6.3.1 The fill tower opening shall be protected by a completely sealed airtight cover.

13.6.3.2* The cover shall be attached to the fill tower by mechanical means.

13.6.3.3 The fill opening shall incorporate a removable screen with a mesh not to exceed ¼ in. (6 mm) and shall be arranged so that foam concentrate from a 5 gal (19 L) container can be dumped directly to the bottom of the tank to minimize aeration without the use of funnels or other special devices.

13.6.4 The fill tower shall be equipped with a pressure/vacuum vent that enables the tank to compensate for changes in pressure or vacuum when filling or withdrawing foam concentrate from the tank.

13.6.4.1 The pressure/vacuum vent shall not allow atmospheric air to enter the foam tank except during operation or to compensate for thermal fluctuations.

13.6.4.2 The vent shall be protected to prevent foam concentrate from escaping or directly contacting the vent at any time.

13.6.4.3 The vent shall be of sufficient size to prevent tank damage during filling or foam withdrawal.

13.6.5 The foam concentrate tank shall not be equipped with an overflow pipe or any direct opening to the atmosphere.

13.6.6* The foam concentrate tank(s) shall be designed and constructed to facilitate complete interior flushing and cleaning as required.

13.6.7 Tank Drain.

13.6.7.1 A minimum ¾ in. (19 mm) inside diameter full flow drain valve and piping shall be provided at the lowest point of any foam concentrate tank.

13.6.7.2 The drain shall be piped to drain directly to the surface beneath the apparatus without contacting other body or chassis components.

13.6.8* The foam concentrate tank shall be constructed and installed to be independent of the apparatus body.

13.6.9 The foam concentrate discharge system design shall prevent the siphoning of foam concentrate.

13.6.10 Labels.

13.6.10.1 A label that reads "Foam Tank Fill" shall be placed at or near any foam concentrate tank fill opening.

13.6.10.2* A label shall be placed at or near any foam concentrate tank fill opening that specifies the following:

(1) Type(s) of foam concentrate the system is designed to use
(2) Any restrictions on the types of foam concentrate that can be used with the system
(3) A warning message that reads "Warning: Do Not Mix Brands and Types of Foam"

--`,,```,,,,````-`-`,,`,,`,`,,`---

Copyright National Fire Protection Association
Provided by IHS under license with NFPA
No reproduction or networking permitted without license from IHS
Not for Resale

13.6.11 The foam concentrate tank outlet connection shall be designed and located to prevent aeration of the foam concentrate and shall allow withdrawal of 80 percent of the foam concentrate tank storage capacity under all operating conditions with the fire apparatus on level ground.

13.6.12 The foam concentrate tank inlet connection, if provided, shall prevent aeration of the foam concentrate under all operating conditions.

13.7* Foam Concentrate Pump. If the foam proportioning system is equipped with a foam concentrate pump, the requirements of 13.7.1 through 13.7.4 shall apply.

13.7.1 The foam concentrate pump shall operate without cavitation when delivering maximum rated flow.

13.7.2* The materials of construction for the foam concentrate pump shall be corrosion resistant and compatible with the type of foam concentrate(s) listed on the plate required in 13.9.3.

13.7.3 Drivetrain components that transmit power to the foam concentrate pump shall be in accordance with the fire apparatus manufacturer's design performance provided on the plate required in 13.9.3.

13.7.4 A means to relieve excess pressure in the foam concentrate pumping system shall be provided to protect the foam concentrate pump from damage.

13.8 Pressure Vessel Foam Concentrate or Foam Solution Tanks. If the foam proportioning system incorporates a pressure vessel foam concentrate tank, or the foam solution is contained in a pressure vessel, the requirements of 13.8.1 through 13.8.8 shall apply.

13.8.1 If the tank is charged with a compressed gas or a pressurized liquid, and it falls within the scope of the ASME *Boiler and Pressure Vessel Code*, Section VIII, Division 1, it shall be designed, fabricated, and stamped in accordance with the requirements of the ASME *Boiler and Pressure Vessel Code*, Section VIII, Division 1, for the rated pressure.

13.8.2 Foam proportioning system piping and components shall be designed to withstand a minimum of 1½ times the maximum working pressure of the pressure vessel and shall be tested to the working pressure of the pressure vessel after installation.

13.8.3 The pressure vessel tank shall be protected against corrosion from the foam concentrate or water stored in the tank.

13.8.4 If the tank is equipped with a gravity fill (i.e., has a fill cap), the fill opening shall be a minimum of 2 in. (51 mm) inside diameter.

13.8.4.1 The fill cap shall be equipped with nontapered threads and a compressible gasket.

13.8.4.2 Special wrenches or tools required to tighten the fill cap shall be supplied by the manufacturer and shall be mounted adjacent to the fill cap.

13.8.4.3 A safety vent hole shall be located in the fill cap so that it vents the tank pressure while at least 3½ threads remain engaged.

13.8.5 A minimum ½ in. (13 mm), manually operated, valved vent shall be provided on all pressure vessel tanks.

13.8.6 If the pressure vessel is charged with a compressed gas or a pressurized liquid, a relief valve that meets the applicable requirements of the ASME *Boiler and Pressure Vessel Code*, Section VIII, Division 1, shall be installed on the pressure vessel and set to prevent the vessel pressure from exceeding 110 percent of the maximum allowable working pressure.

13.8.7 A minimum ½ in. (13 mm), manually operated, valved drain connection shall be provided on all pressure vessel tanks.

13.8.8 A device indicating the internal pressure of the pressure vessel shall be located at the operator's position.

13.9 Labels, Plates, and Instructions.

13.9.1 An instruction plate shall be provided for the foam proportioning system that includes, at a minimum, a piping schematic of the system and basic operating instructions.

13.9.2 Each control, gauge, and indicator necessary to operate the foam proportioning system shall be marked with a label as to its function.

13.9.3 A plate, located at the operator's position, shall provide the following information pertaining to the operation specifications of the foam proportioning system:

(1) Foam classification type
(2) Maximum/minimum proportioning rate (percent)
(3) Maximum/minimum water flow (gpm)
(4) Maximum/minimum operating pressure
(5)*The statement "Only use concentrates that are compatible with this foam proportioning system. Refer to the foam proportioning system manufacturer's operating manual."

13.9.3.1 If an in-line eductor system is provided on the apparatus, the following information shall also be provided on the plate:

(1) Maximum hose length using 1½ in., 1¾ in., and 2 in. (38 mm, 44 mm, and 51 mm) hose
(2) Allowable elevation changes
(3) The statement: "The flow rate of the nozzle must match the flow rate of the system."

13.9.3.2 If an around-the-pump system is provided on the apparatus, the following information shall also be provided on the plate:

(1) Maximum intake pressure or required intake to discharge pressure differential
(2) A table to indicate flow rate and the corresponding metering valve setting

13.9.4 Operations and Maintenance Manual.

13.9.4.1 Two copies of an operations and maintenance manual shall be provided.

13.9.4.2 The manual shall include a complete diagram of the system, together with operating instructions, system foam concentrate capabilities, original system calibration, and details outlining all recommended maintenance procedures.

13.10 Foam Proportioning System Accuracy.

13.10.1* The foam proportioning system shall be type tested and certified by the foam proportioning system manufacturer to be accurate throughout the foam proportioning system's declared range of water flow, water pressure, foam percentage (or foam proportioning system capacity) and concentrate viscosity.

Copyright National Fire Protection Association
Provided by IHS under license with NFPA
No reproduction or networking permitted without license from IHS
Not for Resale

Table 13.10.1.1 Test Points for Certification of Foam Proportioning System Performance

Water Flow	Water Pressure	Foam Percentage (or Foam Proportioning System Capacity)
Minimum	Minimum	Minimum
Maximum	Maximum	Maximum*
Minimum	Maximum	Minimum
Maximum	Minimum	Maximum
Midrange	Midrange	Midrange†

*See 13.10.1.3.
†See 13.10.1.2.

13.10.1.1 At a minimum, this declaration shall include the test points listed in Table 13.10.1.1.

13.10.1.2* Calibration at midrange shall be established by the foam proportioning system manufacturer.

13.10.1.3 When testing to the maximum for water flow and foam percentage or foam proportioning system capacity, the test shall be at the limits of the foam proportioning system or the water pump, whichever is more restrictive.

13.10.2 Systems designed to produce foam solution at ratios of less than 1 percent shall proportion foam concentrate to an accuracy of –0 +40 percent.

13.10.3 Systems designed to produce foam solution at ratios of 1 percent or greater shall proportion foam concentrate to an accuracy of –0 +30 percent or 1 percentage point, whichever is less.

13.10.4 The foam proportioning system manufacturer shall provide the certification required by Section 13.10 to the final-stage apparatus manufacturer.

13.10.4.1 The certification shall include the foam proportioning system manufacturer's viscosity performance specifications.

13.10.4.2 The final-stage apparatus manufacturer shall provide a copy of the certification to the final user.

13.11 Testing and Documentation.

13.11.1 The final installer shall test and certify the following:

(1) The foam proportioning system, as installed, complies with the foam equipment manufacturer's installation recommendations.
(2)*The foam proportioning system has been calibrated and tested to meet the foam equipment manufacturer's and the purchaser's performance specifications.
(3)*At a minimum, the foam proportioning system has been tested at the points defined in Table 13.11.1 for each foam system injection point.

13.11.2 The final installer shall furnish documentation declaring the foam proportioning system as installed meets the requirements of 13.10.2 or 13.10.3 across the foam proportioning system manufacturer's declared range of water flow, water pressure, foam percentage (or foam proportioning system capacity) and concentrate viscosity at the test points defined in Table 13.11.1.

Table 13.11.1 Test Points for Installation Testing of Foam Proportioning System Performance

Water Flow	Water Pressure	Foam Percentage (or Foam Proportioning System Capacity)
Minimum	Minimum	Minimum
Maximum	Maximum	Maximum*
Midrange	Midrange	Midrange†

*See 13.10.1.3.
†See 13.10.1.2.

Chapter 14 Compressed Air Foam Systems (CAFS)

14.1* Application. If the wildland fire apparatus is equipped with a compressed air foam system (CAFS), it shall comply with the applicable sections of this chapter.

14.2 General Requirements.

14.2.1 An automatic regulating foam proportioning system shall be used and shall comply with the applicable requirements of Chapter 13.

14.2.2 The total CAFS rating shall be expressed in terms of air flow and water flow.

14.2.2.1 The air flow shall be expressed in standard cubic feet per minute (SCFM) [standard cubic meters per minute (SCMM)] and shall be based on the continuous flow capacity of the compressed air source(s) at a minimum gauge pressure of 125 psi (862 kPa).

14.2.2.2 The water flow shall be expressed in gallons per minute (gpm) [liters per minute (L/min)] at a gauge pressure of 125 psi (862 kPa).

14.2.3 The fire apparatus shall be capable of supplying power for operating the CAFS at its rated capacity while simultaneously providing power to all other power-dependent systems installed on the apparatus.

14.2.4* On a CAFS, the water pump and air pressures shall be automatically balanced up to the rated pressure of the air compressor within ±5 percent.

14.2.5* A means shall be provided on the CAFS for the operator to relieve all pressure from the system after the system has been deactivated.

14.3 Compressed Air System.

14.3.1 The compressed air system operating in clean environmental conditions shall be designed to provide a continuous rated air supply for a duration of 6 hours without needing adjustment, additional lubrication, or air filters changed.

14.3.2 Relief Valve.

14.3.2.1 The compressed air system shall be equipped with a relief valve that is set to prevent the compressed air system from exceeding 110 percent of the maximum allowable working pressure of the system.

14.3.2.2 The outlet of the relief valve shall be routed to an area that does not expose personnel to air blasts or cause the creation of dust.

Copyright National Fire Protection Association
Provided by IHS under license with NFPA
No reproduction or networking permitted without license from IHS
Not for Resale

14.3.3 If the possibility exists for moisture to build up in the compressed air system, the system shall be equipped with moisture traps and drains.

14.3.4 If a holding, surge, or separator tank (DOT tank or ASME pressure vessel) is provided, the tank shall comply with 29 CFR 1910.169, "Air receivers," or equal, for the rated pressure.

14.3.4.1 Transportable air tanks shall comply with 49 CFR 178.37, "Specification 3AA and 3AAX seamless steel cylinders," or 29 CFR 1910.169.

14.3.4.2 Relief valves on transportable air tanks shall be of the ASME type on ASME cylinders and of the DOT type on DOT cylinders or equal for the rated pressure.

14.3.4.3 Valves installed on air tanks shall meet the requirements of the Compressed Gas Association or equivalent standards regarding pressure and usage with compressed air.

14.3.4.4 If the installation utilizes cylinders that require periodic testing, a label shall be placed on the operator's panel indicating the test date stamped on the cylinders and the date the cylinders will next require testing.

14.4* Air Mixing.

14.4.1 An automatic means shall be provided to prevent the backflow of water or foam solution into the compressed air system, or air into the water pump or the foam proportioning equipment.

14.4.2 A means of mixing air and foam solution that provides for a homogeneous mixture of compressed air and foam solution shall be provided on CAFS.

14.5* Compressed Air System Piping. The discharge plumbing shall be configured to minimize the use of elbows or abrupt turns.

14.6 Air System Controls.

14.6.1 All compressed air system controls shall be located such that they can be reached from the pump operator's position and shall be identified with a plate in accordance with the requirements of 14.8.1.

14.6.2 Compressed air systems that require flushing after use shall be provided with controls that are accessible to the operator and enable the operator to completely flush the system with water according to the manufacturer's instructions.

14.7 Foam System Pressure Gauges, Flowmeters, and Indicators.

14.7.1 The displays of all pressure gauges, flowmeters, and indicators (e.g., fluid level indicators) shall be located so they are visible from the pump operator's position and shall meet the requirements of 4.7.3.

14.7.2 Where analog pressure gauges are used, they shall meet the requirements of 14.7.2.1 through 14.7.2.4.

14.7.2.1 Analog pressure gauges shall have a minimum accuracy of Grade B as defined in ASME B40.100.

14.7.2.2 Numerals for master gauges shall be a minimum of 5⁄32 in. (4 mm) high.

14.7.2.3 There shall be graduation lines showing at least every 10 psi (70 kPa), with major and intermediate graduation lines emphasized and figures at least every 100 psi (700 kPa).

14.7.2.4 Analog pressure gauges shall be vibration and pressure pulsation dampened; be resistant to corrosion, condensation, and shock; and have internal mechanisms that are factory lubricated for the life of the gauge.

14.7.3 If digital pressure gauges are used, they shall meet the requirements of 14.7.3.1 through 14.7.3.3.

14.7.3.1 The digits shall be at least ¼ in. (6.4 mm) high.

14.7.3.2 Digital pressure gauges shall display pressure in increments of not more than 10 psi (70 kPa).

14.7.3.3 Digital pressure gauges shall have an accuracy of ±3 percent over the full scale.

14.7.4 Each pressure gauge and flowmeter, and its respective display, shall be mounted and attached so it is protected from accidental damage and excessive vibration.

14.7.5 If flowmeters are provided, they shall meet the requirements of 14.7.5.1 and 14.7.5.2.

14.7.5.1 Flowmeter displays shall be located at the pump operator's position and shall indicate the air flow in standard cubic feet per minute (SCFM) [standard cubic meters per minute (SCMM)] and indicate the water flow in gallons per minute (gpm) [liters per minute (L/min)].

14.7.5.2 Flowmeters shall be rated to a hydrostatic burst gauge pressure of 500 psi (3400 kPa) if located on the pressure side of the system.

14.7.6* A pressure gauge shall be provided for the compressed air system.

14.8 Labels, Plates, and Instructions.

14.8.1 A plate indicating the identification, function, and operation shall be provided for each control, gauge, and indicator required to operate the CAFS.

14.8.2 A label shall be provided that is visible from the pump operator's position that gives the rated continuous flow capacity of the compressed air system at a gauge pressure of 125 psi (862 kPa).

14.8.3 An instruction plate shall be provided that is visible from the pump operator's position that states the following:

(1) Open and close valves slowly.
(2) Do not run with just air/water.
(3) Shut off air when foam tank is empty.
(4) Be prepared for high nozzle reactions — open nozzle slowly.

14.8.4 Operations and Maintenance Manual.

14.8.4.1 Two copies of an operations and maintenance manual shall be provided.

14.8.4.2 The manual shall include a complete diagram of the CAFS together with operating instructions, the system rating, and details outlining all recommended maintenance procedures.

14.9* Manufacturer's Predelivery Tests. The manufacturer shall conduct the following tests prior to delivery of the fire apparatus and provide documentation of the test results to the purchaser at delivery of the fire apparatus.

14.9.1 CAFS Capacity Rating Test.

14.9.1.1 The operation of the water pump and the compressed air system shall be tested simultaneously to determine the integrity of the system and to ensure that the power available is capable of operating these components of the CAFS simultaneously.

Copyright National Fire Protection Association
Provided by IHS under license with NFPA
No reproduction or networking permitted without license from IHS
Not for Resale

14.9.1.1.1 The compressed air system shall be operated at its flow capacity at a minimum gauge pressure of 125 psi (862 kPa), and the water pump shall discharge a minimum of 2 gpm (7.6 L/min) of water at 125 psi (862 kPa) net pump pressure for every 1 SCFM (0.028 SCMM) of compressed air discharge.

14.9.1.1.2 The discharge shall be through at least two separate discharge openings, one discharging air only and the other discharging water only.

14.9.1.2 One or more lines of fire hose of sufficient diameter shall be provided to allow discharge of the required amount of water from the pump to a nozzle or other flow-measuring equipment without exceeding a flow velocity of 35 ft/sec (10.7 m/sec) [approximately 500 gpm (2000 L/min) for 2½ in. (65 mm) hose].

14.9.1.2.1 The discharge shall be measured using a smooth-bore nozzle and pitot tube or other equipment such as flowmeters, volumetric tanks, or weigh tanks.

14.9.1.2.2 Test gauges shall meet the requirements of 9.11.2.2.5.

14.9.1.3 The air flow rate shall be measured using a pressure and temperature compensated flow-measuring device.

14.9.1.3.1 The air flow shall be measured in SCFM (SCMM) at a minimum gauge pressure of 125 psi (862 kPa).

14.9.1.3.2 The air flow–measuring device shall have been calibrated for accuracy within the previous 3 months.

14.9.1.3.3* The air discharge outlet shall have nothing attached directly to it except the test device(s).

14.9.1.4 The water pump and the compressed air system shall be started, and the rated flows and pressures as specified in 14.9.1.1.1 shall be established and maintained.

14.9.1.4.1 The system shall be run for 1 hour.

14.9.1.4.2 Readings of the airflow rate and pressure, and the water pump pressure and discharge rate, shall be taken at least every 10 minutes.

14.9.1.5 Failure of any component of the CAFS to maintain air and water pressures and discharge volumes at or above the system rating shall constitute failure of the test.

14.9.2 Standby Run Test.

14.9.2.1 One 200 ft (60 m) line of 1½ in. (38 mm) hose shall be connected to the discharge of the CAFS and shall be stretched out on level ground.

14.9.2.2 A quarter-turn valve of the same nominal size as the hose shall be installed at the discharge end.

14.9.2.3 The hose shall be restrained immediately behind the valve at the discharge end to prevent uncontrollable movement when the valve is opened.

14.9.2.4 Operating as a CAFS, with a gauge pressure air output at 125 psi (862 kPa), a foam flow shall be established in the hose line.

14.9.2.5 With the water tank at the half-full level, the valve at the discharge end of the hose shall be shut no faster than in 3 seconds and no slower than in 10 seconds.

14.9.2.6 The engine(s) speed shall be maintained for 10 minutes without discharging water, air, or foam solution from the CAFS and without operator intervention.

14.9.2.7 A bypass line shall be permitted to be opened temporarily if needed to keep the water temperature in the pump within acceptable limits.

14.9.2.8 At the end of 10 minutes, the valve shall be reopened no faster than within 3 seconds and no slower than within 10 seconds.

14.9.2.9 Either damage to the CAFS that affects its rated performance characteristics or the lack of a fire stream immediately upon opening the hose line shall constitute failure of this test.

Chapter 15 Winches

15.1 General. If a chassis-mounted winch is installed on the fire apparatus, it shall meet the requirements of this chapter.

15.1.1* The winch shall be designed for the intended use and shall be installed in accordance with the winch manufacturer's recommendations.

15.1.2 All winches shall be equipped with rollers, guides, or both to prevent damage to the winch wire or synthetic rope or the apparatus.

15.1.3 All rollers and guides shall be designed to match the winch capacity and rope size.

15.2* Winch Wire or Synthetic Rope.

15.2.1 The winch shall have a minimum wire rope or synthetic rope length of 75 ft (22 m).

15.2.2 The wire rope or synthetic rope shall be of a type and size recommended by the winch manufacturer.

15.2.3 The wire rope assembly, including all hardware such as clevises, hooks, and snatch blocks provided for attachment to the winch, shall have a design load rating greater than the line pull capacity of the winch.

15.3 Free-Spooling Clutch. The winch shall be equipped with a clutch assembly to permit free spooling and quick removal of wire or synthetic rope.

15.3.1 This control shall be accessible without reaching under the fire apparatus.

15.3.2 If the winch is installed under the fire apparatus, it shall be remotely controlled.

15.4 Electric-Powered Winches.

15.4.1 Controls.

15.4.1.1* Operation of the electric motor shall be by means of a handheld control with forward, neutral, and reverse positions.

15.4.1.2 The control shall be located at the end of an electrical cord that is a minimum 25 ft (7.6 m) long and that plugs into a receptacle near the winch location, or shall be integrated into a handheld transmitter operating on an approved radio frequency for the winch control device.

15.4.2 Power Supply.

15.4.2.1 Dedicated power and ground circuits shall be utilized.

Copyright National Fire Protection Association
Provided by IHS under license with NFPA
No reproduction or networking permitted without license from IHS
Not for Resale

15.4.2.2 Wiring shall be sized in accordance with the winch manufacturer's installation instructions and shall comply with Chapter 6 of this standard.

15.4.3 Removable Electric Winches.

15.4.3.1 Electric winches that are temporarily attached to the apparatus (at sides, rear, or front) shall meet the same requirements as permanently mounted winches.

15.4.3.2 The attachment to the apparatus shall be with quick-release devices.

15.4.3.3 The attachment system on the apparatus shall meet the requirements of Section 8.10.

15.4.4 Electric Power for Removable Winches.

15.4.4.1 The electrical power supply(ies) from the apparatus to the removable winch shall terminate at a quick disconnect receptacle with a connector plug.

15.4.4.2 The receptacle shall have a label indicating its use.

15.4.4.3 The power cord from the receptacle to the winch shall be sized for the power requirements of the winch.

15.4.4.4 The power cord shall be highly flexible and shall be protected from mechanical damage.

15.5* Hydraulically Driven Winches.

15.5.1 Hydraulic Hose.

15.5.1.1 All hydraulic hose shall be designed for the hydraulic pressures expected to be encountered.

15.5.1.2 Hose shall be a wire-braided-type with a female swivel on one end.

15.5.2 The forward-neutral-reverse hydraulic control for the winch shall be electrically operated to permit remote control of the hydraulic winch operations.

15.5.2.1 Operation of the hydraulic winch shall be by means of a handheld control with forward, neutral, and reverse positions.

15.5.2.2 The control shall be located at the end of an electrical cord that is a minimum 25 ft (7.6 m) long and that plugs into a receptacle near the winch location, or shall be integrated into a handheld transmitter operating on an approved radio frequency for the winch control device.

15.5.3 Hydraulic Tanks.

15.5.3.1 The hydraulic fluid tank shall be sized to prevent overheating of the fluid, or cavitation of the hydraulic pump at its maximum output level.

15.5.3.2 The tank shall permit visual checking of the fluid level and easy refilling.

15.5.3.3 The fill point shall have a label permanently attached near the fill point stating the hydraulic oil quantity and type.

15.5.3.4 A drain plug shall be installed to permit complete draining of the tank.

15.5.3.5 A tank return line diffuser shall be installed in the tank.

15.5.3.6 A tank swash partition shall be installed in the tank between the suction and return lines.

15.5.3.7 A vent shall be supplied and shall be designed to prevent dirt and moisture from entering the tank.

15.5.4 The hydraulic system for the winch shall be equipped with necessary filters and strainers to keep the hydraulic fluid within the cleanliness requirements necessary for operation of the winch.

15.5.5 Driving Compartment Controls. The hydraulic winch engagement controls shall be located in the driving compartment.

15.5.5.1* A "Hydraulic Winch Engaged" indicator shall be provided in the driving compartment to indicate that the hydraulic pump engagement has been successfully completed.

15.5.5.2 An "OK to Operate Winch" indicator shall be provided in the driving compartment to indicate that the winch is engaged, that the transmission is in the proper gear (automatic transmissions only), and that the parking brake is engaged.

15.5.5.3 An interlock system shall be provided to prevent advancement of the engine speed in the driving compartment or at any operator's panel unless the transmission is in neutral and the parking brake is engaged, or the apparatus is in the "OK to Operate Winch" mode.

Chapter 16 Vehicle Protection Systems

16.1 Brush Rails. If brush rails are installed on the fire apparatus, they shall meet the requirements of 16.1.1 through 16.1.4.

16.1.1 Rails shall be supported directly by members attached to the vehicle chassis frame.

16.1.2 The rails shall be designed for replacement, if damaged, or for removal for servicing or repairing the vehicle chassis or body without the use of welding or cutting equipment.

16.1.3 The rails shall not impede the normal opening of engine enclosures, access to the driving and crew compartment(s), access to body storage compartments, or access to fire-fighting equipment.

16.1.4 The rails shall not block the full function of any of the vehicle lighting systems, whether normal travel lights, warning lights, or work area lights on the vehicle.

16.2 Grille Guard. If a grille guard is installed on the fire apparatus, it shall meet the requirements of 16.2.1 through 16.2.6.

16.2.1 The grille guard shall protect the front of the cab, including the headlights and radiator air inlet.

16.2.2 The grille guard shall be supported directly by the bumper at the front of the cab or by members attached to the vehicle chassis frame.

16.2.3 The grille guard shall be designed for replacement, if damaged, or for removal for servicing or repairing the vehicle chassis without the use of welding or cutting equipment.

16.2.4 The guard shall not impede the normal opening of the engine enclosures.

16.2.5 The guard shall not block the full function of any of the vehicle lighting systems, whether normal travel lights, warning lights, or work area lights on the vehicle.

16.2.6 Parts of the radiator that might also be exposed and subjected to brush damage from behind and under the front bumper shall be protected.

--`,,```,,,,````-`-`,,`,,`,`,,`---

Copyright National Fire Protection Association
Provided by IHS under license with NFPA
No reproduction or networking permitted without license from IHS
Not for Resale

16.3* Skid Plates. If skid plates are installed on the fire apparatus, they shall meet the requirements of 16.3.1 through 16.3.4.

16.3.1 Skid plates shall be installed on nonmovable components that protrude below the normal truck chassis parts.

16.3.2 Skid plates shall be supported directly by the component they are protecting or the chassis frame and shall be removable without the use of welding or cutting equipment.

16.3.3 Skid plates shall not impede the normal function of the vehicle or any of its systems.

16.3.4 Skid plates shall be designed, located, and installed in a manner that minimizes the trapping of vegetative material between the plate and the component it guards or other components.

Annex A Explanatory Material

Annex A is not a part of the requirements of this NFPA document but is included for informational purposes only. This annex contains explanatory material, numbered to correspond with the applicable text paragraphs.

A.1.1 This standard is designed to cover new automotive fire apparatus primarily used to fight wildland fires, at both on-road and off-road locations. To a limited degree, these apparatus can be used to protect exposures or fight structure fires from the exterior. The apparatus covered by this standard is not intended to replace or supersede the function of a pumper or initial attack fire apparatus.

A.1.3.1 The term *new* as applied in this standard is intended to refer to the original construction of a fire apparatus using all new materials and parts.

A.1.4 It is not intended that this standard be applied retroactively to existing apparatus. However, if major renovations are made to an existing apparatus, it is suggested that the apparatus be brought into line with this standard as closely as possible. NFPA 1912 covers the requirements for refurbishing a fire apparatus.

A.1.6 Metric units of measurement in this standard are in accordance with the modernized metric system known as the International System of Units (SI). The liter, a unit that is outside of but recognized by SI, is commonly used in international fire protection. Table A.1.6(a) and Table A.1.6(b) provide conversion factors as an aid to the user. Table A.1.6(c) provides other conversion factors that could be useful to the reader. Table A.1.6(d) provides a list of the abbreviations used in this standard and their meaning.

A.3.2.1 Approved. The National Fire Protection Association does not approve, inspect, or certify any installations, procedures, equipment, or materials; nor does it approve or evaluate testing laboratories. In determining the acceptability of installations, procedures, equipment, or materials, the authority having jurisdiction may base acceptance on compliance with NFPA or other appropriate standards. In the absence of such standards, said authority may require evidence of proper installation, procedure, or use. The authority having jurisdiction may also refer to the listings or labeling practices of an organization that is concerned with product evaluations and is thus in a position to determine compliance with appropriate standards for the current production of listed items.

A.3.2.2 Authority Having Jurisdiction (AHJ). The phrase "authority having jurisdiction," or its acronym AHJ, is used in NFPA documents in a broad manner, since jurisdictions and approval agencies vary, as do their responsibilities. Where public safety is primary, the authority having jurisdiction may be a federal, state, local, or other regional department or individual such as a fire chief; fire marshal; chief of a fire prevention bureau, labor department, or health department; building official; electrical inspector; or others having statutory authority. For insurance purposes, an insurance inspection department, rating bureau, or other insurance company representative may be the authority having jurisdiction. In many circumstances, the property owner or his or her designated agent assumes the role of the authority having jurisdiction; at government installations, the commanding officer or departmental official may be the authority having jurisdiction.

Table A.1.6(a) Conversion Factors: U.S. Units to SI Units

U.S.	SI
1 gallon per minute (gpm)	3.785 liters per minute (L/min)
1 pound per square inch (psi)	6.895 kilopascals (kPa)
1 inch of mercury (in. Hg) at 60°F (15.6°C)	3.376 kilopascals (kPa)
1 inch (in.)	25.40 millimeters (mm)
1 foot (ft)	0.3048 meter (m)
1 cubic foot (ft^3)	0.02832 cubic meter (m^3)
1 square inch ($in.^2$)	645.2 square millimeters (mm^2)
1 mile per hour (mph)	1.609 kilometers per hour (km/hr)
1 pound (lb)	0.4536 kilogram (kg)
1 horsepower (hp)	0.7457 kilowatt (kW)
1 candle power	12.57 lumens
1 pound per cubic foot (lb/ft^3)	16.02 kilograms per cubic meter (kg/m^3)
1 footcandle (fc)	10.76 lux (lx)
1 footlambert (fl)	3.426 candela/m^2

Table A.1.6(b) Conversion Factors: SI Units to U.S. Units

SI	U.S.
1 liter per minute (L/min)	0.2642 gallon per minute (gpm)
1 kilopascal (kPa)	0.1450 pound per square inch (psi)
1 kilopascal (kPa)	0.2962 inch of mercury (in. Hg) at 60°F (15.6°C)
1 millimeter (mm)	0.03937 inch (in.)
1 meter (m)	3.281 feet (ft)
1 cubic meter (m^3)	35.31 cubic feet (ft^3)
1 square millimeter (mm^2)	0.001550 square inch ($in.^2$)
1 kilometer per hour (km/hr)	0.6214 mile per hour (mph)
1 kilogram (kg)	2.205 pounds (lb)
1 kilowatt (kW)	1.341 horsepower (hp)
1 lumen	0.07958 candle power
1 kilogram per cubic meter (kg/m^3)	0.06243 pound per cubic foot (lb/ft^3)
1 lux (lx)	0.09290 footcandle (fc)
1 candela/m^2	0.2919 footlambert (fl)

Copyright National Fire Protection Association
Provided by IHS under license with NFPA
No reproduction or networking permitted without license from IHS
Not for Resale

Table A.1.6(c) Useful Conversion Factors

U.S. Units	=	Metric Units
1 gallon per minute (gpm)	=	0.833 imperial gallon per minute (igpm)
1 imperial gallon per minute (igpm)	=	4.546 liters per minute (L/min)
1 imperial gallon per minute (igpm)	=	1.2 gallons per minute (gpm)
1 foot (ft) of water	=	0.433 pound per square inch (psi)
1 liter per minute (L/min)	=	0.2200 imperial gallon per minute (igpm)
1 pound per square inch (psi)	=	2.31 feet (ft) of water
1 metric ton (mton)	=	1000 kilograms (kg)
1 kilopascal (kPa)	=	0.01 bar
1 bar	=	100 kilopascals (kPa)

Table A.1.6(d) Abbreviations Used in Standard

Abbreviation	Term	Abbreviation	Term
A	ampere	kPa	kilopascal
C	Centigrade	kW	kilowatts
F	Fahrenheit	L	liters
fc	footcandle	L/min	liters per minute
ft	feet	lx	lux
gpm	gallons per minute	m	meter
hp	horsepower	mm	millimeter
in.	inch	mph	miles per hour
in. Hg	inches of mercury	psi	pounds per square inch
kg	kilograms	V	volt
km/hr	kilometers per hour		

A.3.3.8 Automatic Regulating Foam Proportioning System. The automatic adjustments of the foam proportioning system are made based on changes in water flow or conductivity.

A.3.3.19 Compound Gauge. On most gauges, zero equals atmospheric pressure. Gauges typically measure pressure above atmospheric pressure in pounds per square inch (psi) [kilopascals (kPa)] and below atmospheric pressure in inches of mercury (in. Hg) [kilopascals (kPa)]. [**1901,** 2003]

A.3.3.20 Compressed Air Foam System (CAFS). A CAFS consists of a compressed air source, pressurized source of foam solution, and discharge hardware. [**1901,** 2003]

A.3.3.22 Contractor. The contractor might not necessarily manufacture the fire apparatus or any portion of the fire apparatus but is responsible for the completion, delivery, and acceptance of the entire unit. [**1901,** 2003]

A.3.3.27 Eductor. The pressure at the throat of a venturi is below atmospheric pressure, allowing foam concentrate or other fire-fighting agent at atmospheric pressure in storage to flow into the water stream. [**1901,** 2003]

A.3.3.28 Ejector. An ejector operates on the same principle as a jet pump.

A.3.3.29 Electric Siren (Electromechanical). Only one type of warning sound can be produced by electric sirens, but the level or pitch can be varied by the speed of the motor. [**1901,** 2003]

A.3.3.30 Electronic Siren. Varied types of warning sounds can be produced by electronic sirens, such as a wail, yelp, or simulated air horn. [**1901,** 2003]

A.3.3.46 GAWR (Gross Axle Weight Rating). It is a requirement of the National Highway Traffic Safety Administration that the GAWR be posted in the vehicle on a permanently affixed label. The axle system includes, but is not limited to, the axle, tires, suspension, wheels, frame, brakes, and applied engine torque.

A.3.3.47 Grade. A 45 degree slope is equal to a 100 percent grade. [**1901,** 2003]

A.3.3.49 GVWR (Gross Vehicle Weight Rating). It is a requirement of the National Highway Traffic Safety Administration that the GVWR of a vehicle be posted in the vehicle on a permanently affixed label. The GVWR can be equal to or less than the sum of the front GAWR and the rear GAWR. The in-service weight or gross vehicle weight should always be equal to or less than the GVWR.

A.3.3.56 Maximum Pump Close-Off Pressure. Multistage series/parallel pumps are measured with the pump in the pressure (series) setting. [**1901,** 2003]

A.3.3.62 Net Pump Pressure. When operating from a hydrant, the net pump pressure typically is less than the discharge pressure. For example, if the discharge pressure gauge reads 150 psi (1034 kPa) and the intake (suction) gauge reads 20 psi (138 kPa), the net pump pressure equals 130 psi (896 kPa). When operating from draft, the net pump pressure will be above the discharge pressure. For example, if the discharge pressure gauge reads 145 psi (1000 kPa) and the intake (suction) gauge reads 10 in. Hg (34 kPa) vacuum, the net pump pressure will be 150 psi (1034 kPa) (1 in. Hg = 0.5 psi = 3.4 kPa). [**1901,** 2003]

A.3.3.65 Off-Road Use Vehicle. An off-road use vehicle is not automatically an all-wheel drive vehicle. Off-road vehicles are just as susceptible as on-road vehicles to becoming stuck if they are driven in areas where the ground does not support the vehicle weight.

A.3.3.69 Optical Source. An optical source can consist of a single optical element or a fixed array of any number of optical elements whose geometric positioning relative to each other is fixed by the manufacturer of the optical source and is not intended to be modified. [**1901,** 2003]

A.3.3.73 Preconnected Hose Line. A preconnected hose line is commonly called a bucket line, cross lay, or mattydale. [**1901,** 2003]

A.3.3.85 Slip-On Fire-Fighting Module. Slip-on fire-fighting modules typically can be placed on and removed from the vehicle with a minimum of time and effort.

A.4.2.1 It is the responsibility of the purchaser to provide the contractor with sufficient information to enable the contractor to prepare a bid and a complete description of the apparatus the contractor proposes to supply. Completion of the Apparatus Purchasing Specification Form in Annex B should provide the information required in the various sections of this document.

Copyright National Fire Protection Association
Provided by IHS under license with NFPA
No reproduction or networking permitted without license from IHS
Not for Resale

A.4.2.2 On initial delivery of the fire apparatus, the contractor should supply a qualified representative to demonstrate the apparatus and provide initial instruction to representatives of the purchaser regarding the operation, care, and maintenance of the apparatus and equipment supplied.

A.4.6.1 The engine compartment and the underside of the vehicle are not considered areas of normal nonmaintenance operation.

A.4.7.2 All required signs, plates, and labels should be highly visible and placed on the vehicle where they are not subject to damage from wear and tear.

A.4.8.1 The attachment of electric, air, hydraulic, and other control lines and hoses should be with removable mechanically attached fastening devices. The attachment of such equipment with adhesive or glue-on clamps or clips has been found to be inadequate for long-term performance on fire apparatus. The use of plastic ties to bundle wire harnesses and hose are permissible but should not be used to attach such items to a cab, body, frame, or other major structure.

A.4.9.1 Additional information on tilt table testing can be found in SAE J2180, *A Tilt Table Procedure for Measuring the Static Rollover Threshold for Heavy Trucks*.

A.4.9.2.1 The distribution of the weight between the front and rear wheels should be a major consideration, because improper design will seriously affect the handling characteristics of the fire apparatus. Too little weight on the front wheels can cause a front-end skid and, over bumpy roads, could cause the front of the fire apparatus to veer from side to side. At the very least, it will be difficult to keep the fire apparatus under control. Too much weight on the front wheels will reduce the traction of the rear wheels and can result in a rear-end skid or difficulty in traveling over unpaved roads or in mud.

A.4.9.3.1 It is critical that the purchaser provide the manufacturer the equipment inventory and mounting locations for equipment on the apparatus. This information should include existing equipment and estimated future equipment to be carried. The projections of total equipment payload and mounting locations are essential for proper engineering of a new fire apparatus. It is the responsibility of the purchaser to properly load the fire apparatus and place equipment to comply with the GVWR, the front-to-rear weight distribution, and the right-to-left load balance requirements of this standard.

A.4.9.3.3 The projections of total equipment payload and mounting locations are essential for proper engineering of a new fire apparatus. The purchaser of the fire apparatus should maintain the side-to-side loading requirement in 4.9.3.3 as equipment is loaded or installed on the apparatus.

The percentage difference in side-to-side tire load should be calculated as shown in the following formula:

$$\frac{(\text{heavier weight} - \text{lighter weight})}{\text{Total weight}} \times 100 = \text{Percent difference}$$

A.4.10.1 The power generated by internal combustion engines can decrease with an increase in altitude. The loss varies with the type of engine, the fuel it uses, and the amount of air inlet supercharging. If the apparatus is going to be regularly used at elevations above 2000 ft (600 m), the manufacturer needs to know the operating elevation to provide an engine that will deliver proper performance. *(See Section 4.2.)*

A.4.10.2 Subsection 4.11.2 imposes more stringent requirements on the apparatus for maneuvering. The occasional exposure to excessive grades while moving over roadways is different from prolonged stationary operations. Apparatus might require special lubrication systems for engines and other modifications to ensure the apparatus will not be damaged by prolonged operation on the increased grades. If the purchaser wishes to have the whole apparatus perform to these more stringent requirements while pumping or for stationary operations, these requirements should be detailed in the specifications for the apparatus.

A.4.10.3 The temperature conditions, either hot or cold, where the fire apparatus will be used or stored should be considered in the design of the vehicle. If the vehicle is to be used in conditions that exceed 110°F (43°C), additional cooling of the engine, pump, and other components could be necessary. Likewise, if the apparatus is to be used or stored in subfreezing conditions, special system drains, engine heaters, pressure gauge protectors, or other special components might be needed to prevent damage or to allow continued use.

A.4.11.1(2) Although this standard recognizes the need for the fire apparatus to be able to accelerate to a high speed while traveling on public roads, caution should be taken with regard to how fast the vehicle can travel. Consideration should be given to limiting the maximum speed the vehicle can obtain for safety reasons.

A.4.11.1(3) The purchaser should specify the performance required on grades in excess of 6 percent. The occasional exposure to excessive grades is different from an everyday occurrence. A combination of steep grades and narrow, winding roads might require consultation with manufacturers prior to finalizing the apparatus specifications and then the designation of special road tests. If the apparatus will be subjected to a class of service not normally encountered, a manufacturer cannot be expected to anticipate the need without sufficient specification details.

A.4.11.2 Where fire apparatus might have to operate off paved roads, all-wheel drive, a two-speed rear axle, an auxiliary transmission, an automatic transmission, or any combination of these, might enhance the fire apparatus's off-road capability.

A.4.11.3 Special fire service tire ratings could apply that are different from the sidewall rating on the tire. The purchaser might want to consider requesting the tire manufacturer's rating documentation.

A.4.14 Where the point of delivery is over 2000 ft (600 m) of elevation, it is important to test the pump and pumping engine performance to ensure that the engine can develop adequate power at point of delivery. This test can be performed with the pump supplied from a suitable fire hydrant, or at draft, with the discharge and net pressure maintained at rating for the pump. The net pressure (P), when the pump is supplied from a hydrant with positive intake pressure, is the discharge gauge pressure (D) minus the intake gauge pressure (S).

A.4.15 Certification of a motor vehicle is the affixing of a certification label or tag by the final-stage manufacturer to a motor vehicle, as required by section 114 of the National Traffic and Motor Vehicle Safety Act of 1966 and sections 105 and 606 of the Motor Vehicle Information and Cost Saving Act and other Acts giving information applicable to the vehicle meeting Federal Standards. See 49 CFR Part 567, "Certification," for more information.

Copyright National Fire Protection Association
Provided by IHS under license with NFPA
No reproduction or networking permitted without license from IHS
Not for Resale

A.4.15(3) A motor vehicle sold in the United States requires the affixing of a "Certification" label or tag by the final-stage manufacturer of the motor vehicle stating that the vehicle meets all applicable Federal Motor Vehicle Safety Standards (Part 571) and Federal Theft Prevention Standards (Part 541). The location for affixing the "Certification" label on the motor vehicle is a requirement of the federal standard requiring this label. See 49 CFR 567, "Certification," for more information.

A.4.16 It is important for the purchaser and contractor to agree on the format in which the documentation is to be delivered. It is also important that the purchaser consider the long-term ramifications of the changing media technology if electronic format is used for delivery of the documentation. Software and hardware will need to be maintained over the years to utilize electronic documentation.

A.4.17.2.3(6)(g) The equivalent circuit logic could be described in several ways. It might be shown as an equivalent schematic, a word-based description, or a table. In any case, it should define the relationship between input status and output status.

A.4.17.2.4 Suppliers of components and equipment installed or supplied by the contractor often supply operations and maintenance documents with those components or equipment. This standard requires that the contractor deliver these documents to the purchaser. The purchaser should specify if multiple copies of these documents are required.

A.5.1 The carrying capacity of a vehicle is one of the least understood features of design and one of the most important. All vehicles are designed for a GVWR, which should not be exceeded by the purchaser after the vehicle has been placed in service.

There are many factors that make up the GVWR, including the design of the springs or suspension system, the rated axle capacity, the rated tire and wheel loading, and the distribution of the weight between the front and rear wheels.

Water Tank. One of the most critical factors is the size of the water tank. Water weighs approximately 8.3 lb/gal (1 kg/L). A value of 10 lb/gal (1.2 kg/L) can be used when estimating the weight of the tank and its water, making a 500 gal (2000 L) tank and its water about 5000 lb (2400 kg).

Miscellaneous Equipment. If the finished apparatus is not to be overloaded, the purchaser should provide the contractor with the weight of equipment to be carried if it is in excess of the allowance shown in Table 5.1.2.

Large Compartment Capacity. The manufacturer is only required by the standard to provide a miscellaneous equipment allowance in compliance with the minimum allowance listed in Table 5.1.2. Purchasers who specify vehicles with large compartment capacity should work closely with the vehicle manufacturer to ensure that the GVWR is sufficient to carry the intended equipment. A vehicle with average compartment loading will have a miscellaneous equipment weight of about 8 lb/ft^3 (125 kg/m^3) of compartment space available for miscellaneous equipment. A very lightly loaded vehicle could have as little as 4 lb/ft^3 (65 kg/m^3). A heavily loaded vehicle can reach 12 lb/ft^3 (200 kg/m^3). This volume does not include space occupied by generators, reels, air systems, ladders, hose, and so forth, that are not in the miscellaneous equipment allowance. Total equipment weight varies significantly depending on the density of the equipment and how tightly the fire department chooses to pack it.

Overloading. Overloading of the vehicle by the manufacturer through design or by the purchaser adding a great deal of equipment after the vehicle is in service will materially reduce the life of the vehicle and will undoubtedly result in increased maintenance costs, particularly with respect to the transmissions, clutches, and brakes. Overloading can also seriously affect handling characteristics, making steering particularly difficult.

Underloading. Brake equipment on heavy vehicles can be sensitive to the weight distribution of the vehicle. Specifying a GVWR significantly greater than the estimated in-service weight can lead to poor brake performance, chatter, and squeal. Purchasers who specify configurations with limited compartment volume on a high capacity chassis should consult the manufacturer to ensure that a vehicle with an underloaded condition will not result.

Purchaser Responsibility. The purchaser should specify the weight of the equipment to be carried if it is in excess of the allowance for miscellaneous equipment. This weight specification allows a chassis with an adequate GAWR and GVWR to be supplied. Specific additional equipment often necessary to meet the operational requirements of the department could include additional hose, chain saws, rations, tow chains, tire chains, drinking water containers, ice chests, additional hand tools, and additional containers of foam concentrate.

Severe Service. Fire apparatus have to be able to perform their intended service under adverse conditions. Wildland apparatus often are required to operate off paved streets or roads. Chassis components should be selected with the rigors of service in mind.

Off-Road Use. If the apparatus is designed for off-road use, it is recommended that the apparatus, when loaded to its estimated in-service weight, should not exceed 80 percent of the chassis GVWR. In addition, the axle loads should not exceed 80 percent of the appropriate GAWR. If the vehicle chassis manufacturer certifies the GVWR and GAWR for 50 percent minimum off-road use, the full weight ratings can be utilized.

A.5.1.2(4) The weight of 200 lb (90 kg) per person used here does not include the weight of SCBA and tools carried by a fire fighter, because the weight of this equipment is accounted for in 5.1.2(8). A weight of 250 lb (114 kg) for a fully equipped fire fighter is used in other NFPA standards.

A.5.1.4 A motor vehicle sold in the United States requires the affixing of a certification label or tag by the final-stage manufacturer of the motor vehicle stating that the vehicle meets all applicable Federal Motor Vehicle Safety Standards (49 CFR 571) and Federal Theft Prevention Standards (49 CFR 541). The location for affixing the certification label on the motor vehicle is a requirement of the Federal standard requiring this label. See 49 CFR 567, "Certification," for more information.

A.5.1.5.1 It is important for fire apparatus drivers to understand the height, length, and weight of the vehicle compared to their personally owned vehicles. It is also important that this information be accurate. The height of the apparatus could change after delivery, depending on what equipment might be added; therefore, the fire department should note such changes on the plate. Suggested wording for the plate is shown in Figure A.5.1.5.1.

A.5.2.1.1 The maximum governed speed is established by the engine manufacturer as a safe limit of engine speed. The engine governor or electronic fuel control system should prevent the engine from exceeding the safe speed. Most engine manufacturers allow a plus tolerance of 2 percent for maximum governed speed.

Copyright National Fire Protection Association
Provided by IHS under license with NFPA
No reproduction or networking permitted without license from IHS
Not for Resale

When manufactured, this vehicle was:
XX ft YY in. High
XX ft YY in. Long
ZZZZ lb GVWR

Changes in height since the apparatus was manufactured shall be noted on this plate by the fire department.

FIGURE A.5.1.5.1 Suggested Plate Showing Dimensions of Fire Apparatus.

A.5.2.1.2 A shutdown beyond the control of the pump operator during fire-fighting operations can result in loss of water flow from the pump that could severely endanger personnel. Automatic fuel line safety shutoff as required by DOT regulations is not considered an automatic engine shutdown.

A.5.2.1.4.1 An increase in engine speed provides increased alternator output, increased engine cooling, increased air conditioner output, and increased output or performance from other devices that derive their power from the chassis engine.

A.5.2.1.4.2 The purpose of the interlock is to ensure that the chassis engine speed cannot be advanced without disengaging the driving wheels of the apparatus either at the transmission (having it in park or neutral) or by having a split shaft PTO fully engaged in the correct position to drive the component.

A.5.2.2.1 Where a regular production model commercial chassis is used, it is recommended that the heavy-duty radiator option be included when such is available.

Where local environmental extremes exist — that is, high humidity and temperatures or extreme low temperatures — the purchaser should state specifically under what environmental conditions the apparatus is expected to operate.

A.5.2.3.1 Full-flow oil filters are mandatory with some diesel engines.

A.5.2.4.1.1.1 Caution needs to be used because air intake filters might affect the engine manufacturer's air restriction requirements.

A.5.2.4.1.1.3 The extent to which air inlet protection is required could depend on specific fire department operations. Departments operating in ember-rich environments such as wildland fires should consider specifying a multiscreen ember separator capable of meeting the performance criteria in accordance with LF 1093-90, Ember Separation Test Procedure, published by Parker Hannifin, Racor®Division, or an equivalent test. Purchasers of apparatus utilizing commercial chassis should be aware that to meet this specification, the manufacturer might need to add a screen and housing externally mounted on or around the commercial chassis hood or the bumper extension.

A.5.2.4.1.2 To prevent engine shutdown due to fuel contamination, dual filters in parallel with proper valving so that each filter can be used separately might be preferable. The purchaser should specify if dual filters are desired. Installation of two or more pumps should be designed so that failure of one pump will not nullify the performance of the other pump(s). It should be remembered that commercial vehicles are designed for over-the-road operation, and the fuel system and battery are at least partially cooled by the flow of air resulting from the motion.

A.5.2.4.1.3.1 With the use of diesel engines, the concern for vapor lock common with gasoline engines does not exist, and electric fuel pumps are not usually compatible for connection in series with a diesel engine fuel system. As a result, where an electric fuel pump is specified with a diesel engine, it is arranged as a fuel priming pump only. Where not properly marked with a label or where the control valves are not properly set, the auxiliary priming system can cause the diesel engine to lose its prime. In addition, operation of a priming pump during diesel engine operation can boost fuel inlet pressure to the engine's fuel system. This could cause erratic engine behavior and loss of engine speed control. Control systems for priming pumps should allow only momentary operation and prevent the operation of the pump while the engine is operating.

A.5.2.4.2.1.1 Caution needs to be used because air intake filters might affect the engine manufacturer's air restriction requirements.

A.5.2.4.2.1.3 See A.5.2.4.1.1.3.

A.5.2.5 Emissions from exhaust discharge pipes should be directed away from any fire-fighting tools, since such emissions contain an oily substance that could make the tools difficult to handle and possibly dangerous to use.

Vehicle exhaust systems often are hung low on the undercarriage. They are susceptible to damage from objects such as rocks, logs, and stumps. Likewise, vertical-type diesel exhaust pipes often are exposed to tree limbs. The purchaser should specify special requirements for protecting the exhaust system if off-road use or other conditions warrant. Both state and federal regulations regulate chassis exhaust systems.

A.5.3.1.5 Adequate braking capacity is essential for the safe operation of fire apparatus. While this subject is normally covered in state highway regulations, it should be noted that fire apparatus might have a special problem compared with normal vehicles of the same gross vehicle weight. Fire apparatus could be required to make successive brake applications in a short period of time when attempting to respond to alarms with minimal loss of time. Thus, the problem of brake "fade" and braking capacity could be critical unless the brakes provided take into account the service requirements. Air-actuated brakes are recommended for fire service vehicles of over 25,000 lb (11,000 kg) GVWR.

Where air brakes are provided, it is important that they be of a quick buildup type with dual tanks and a pressure regulating valve. The rated compressor capacity should be not less than 12 ft^3/min (0.34 m^3/min) for this class of service. Air brakes require attention to guard against condensation in the air lines, such as might occur in areas subject to changes in climate that affect the moisture content of the air. Automatic moisture ejection of nonfreezing type is recommended. Air pressure drop should be limited to normal air losses. The presence of either of the following conditions indicates the need for immediate service:

(1) Air brake pressure drop of more than 2 psi (14 kPa) in 1 minute with the engine stopped and service brakes released
(2) Air pressure drop of more than 3 psi (21 kPa) in 1 minute with the engine stopped and service brakes fully applied

A.5.3.1.6 Subsection 4.11.2 requires that the apparatus be able to maneuver up and down a 25 percent grade. If there is a need to park the apparatus on such grades and get out of the vehicles, the capability will have to be designed into the parking brake system to park under these conditions.

Copyright National Fire Protection Association
Provided by IHS under license with NFPA
No reproduction or networking permitted without license from IHS
Not for Resale

A.5.3.1.7 Purchasers of fire apparatus with a GVWR less than 36,000 lb (16,330 kg) should also consider equipping the apparatus with an auxiliary braking system. Fire apparatus commonly make repeated stops from high speeds that cause rapid brake lining wear and brake fade, sometimes leading to accidents.

Auxiliary braking systems are recommended on apparatus that are exposed regularly to steep or long grades, are operating in congested areas where repeated stops are normal, or are responding to a high number of emergencies.

Examples of auxiliary braking systems include engine retarders, transmission retarders, exhaust retarders, and driveline retarders. These devices have various levels of effectiveness on braking. In addition, the systems can be activated by various means and settings, both automatic and manual in operation. The purchaser should carefully evaluate all auxiliary braking systems based on truck weight, terrain, duty cycle, and many other factors.

Some auxiliary braking devices should be disconnected when the apparatus is operated on slippery surfaces. Follow the auxiliary braking device manufacturer's recommendations for proper instructions.

A.5.3.1.8 See A.5.3.1.7.

A.5.3.2.1 Fire departments with vehicles that could be subject to continuous long-distance driving need to specify tire rating for continuous operation in place of intermittent operation.

A.5.3.2.2 Ground clearance dimensions are not intended to include the drive shaft(s) connections to an axle(s) that should meet the axle housing clearance requirements. All-wheel drive or off-road vehicles normally require greater ground clearance. Also, the chassis manufacturer's ramp breakover angle should be maintained. The purchaser should consider the terrain over which the vehicle is to be used where specifying the desired ground clearance.

For a wildland engine, ramp breakover angle is very important. No part of the fire package, such as the pump, should drag and become damaged when crossing water bars and other obstacles. Ramp breakover angle is not the same as "ground clearance." *Ground clearance* refers to the clearance all along the bottom of the vehicle, while *ramp breakover angle* is an inverted "V" between the front and rear axles. It is possible to add vertical exhaust pipes and skid plates without decreasing the ramp breakover angle.

A.5.3.2.3 The angle of approach or departure affects the road clearance of the vehicle going over short steep grades such as would be found in a driveway entrance, crossing a high crowned road at a right angle, or in off-road service. Too low an angle of approach or departure will result in the apparatus scraping the ground. Figure A.5.3.2.3 shows the method of determining the angle of departure. The angle of approach (front of vehicle) is measured in the same fashion.

In Figure A.5.3.2.3, the line "AT" represents the circumstance in which the tailboard is the determining lowest point. The line "BT" represents a circumstance in which the tailboard is not the lowest point (in this case, the lowest point is a fuel tank). The angle of departure is shown as "XA" or "XB." To determine the angle of departure, place a thin steel strip against the rear of the tires where they touch the ground or stretch a string tight from one rear tire to the other at the rear of where they touch the ground. Determine the lowest point (the tailboard, fuel tank, or other equipment or component) that would make the smallest angle of departure. Hang a plumb bob from the lowest point and mark the point on the ground where the point of the plumb bob touches. Measure the vertical distance from the ground to the point where the plumb bob was hung (V). Measure the horizontal distance from the plumb bob point to the front of the steel strip or to the string running from rear tire to rear tire (H). Divide the vertical distance (V) by the horizontal distance (H). The ratio of V/H is the tangent of the angle of departure. If this ratio is known, the angle of departure can be determined from a table of trigonometric functions of angles or from a math calculator. The standard requires a minimum angle of departure of 20 degrees; since the tangent of 20 degrees is 0.3640, if V divided by H is 0.3640 or larger, the angle of departure is 20 degrees or greater.

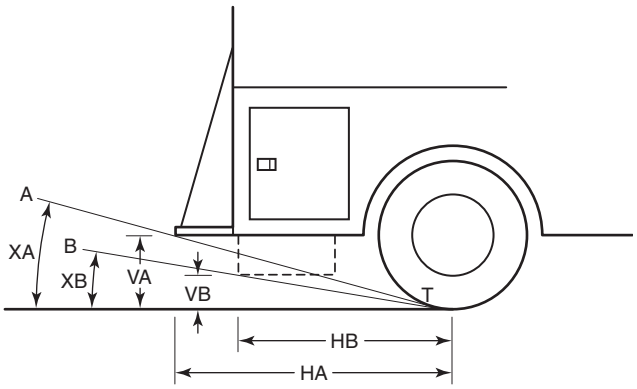

FIGURE A.5.3.2.3 Dimensions for Determining Angle of Departure.

A.5.3.3.1 Where automatic transmissions are used, the power takeoff applications could present problems, especially where dual PTO drives are required. In some instances, the PTO drive can be engaged only in torque converter range with resultant chances of overheating with prolonged use. If high engine rpm occurs, there is the possibility, if the vehicle is accidentally left in gear, of the output torque overcoming the parking brake and moving the vehicle. Proper operational instructions are essential with automatic transmissions.

A.5.3.3.2.1 Programming the engine to use an alternate torque curve or sizing the pump and pump gear ratio to limit the torque required is an acceptable means of limiting the net engine output torque.

A.5.3.3.3 If a 4 × 2, manual transmission–equipped chassis is desired to go 2 mph (3.2 km/hr), special gearing might have to be provided, such as a two-speed axle, an auxiliary transmission, or an extra low–geared transmission.

A.5.3.4.1 The addition of fuel tanks or modification of fuel systems could be limited by safety regulations. This is particularly true for vehicles rated at less than 15,000 lb (6800 kg) GVWR. A single fuel tank is desirable unless fuel capacity needs cannot be met by a single tank. Where a second tank is used, it should include its own fill spout to ensure rapid refilling capability. Where different tank sizes are available, the largest single tank capacity should be provided.

Requiring the operator to operate valves manually to provide additional fuel supply to the engine is not recommended. Free flow from both tanks generally is recommended to prevent unused fuel from being "stored" in a tank for long periods. However, fuel equalization lines between fuel tanks often are located in a vulnerable position underneath the chassis. This should be recognized, particularly where the vehicle is designed for off-road use.

Copyright National Fire Protection Association
Provided by IHS under license with NFPA
No reproduction or networking permitted without license from IHS
Not for Resale

A.6.1 This chapter defines the requirements for alternators, batteries, load management, and instrumentation to detect incipient electrical system failure. The intent is to require an electrical system that will operate the apparatus using power supplied by the alternator, shed nonessential electrical loads where necessary, and provide early warning of electrical failure in time to permit corrective action.

A.6.2.1 The 125 percent requirement for wiring and circuits is intended to provide end users a minimal amount of extra electrical circuit capacity. It is not the intent of this requirement to have the final-stage manufacturer replace the standard OEM chassis manufacturer's wiring to meet the 125 percent requirement. It is also not the intent of this requirement to have electrical accessories purchased by the apparatus manufacturer rewired to meet the 125 percent requirement. Electrical device manufacturer–supplied wiring can be used to the point where it connects to the apparatus manufacturer's installed wiring.

A.6.2.6 It is the intent of 6.2.6 to provide a unique means of identifying a wire or circuit to prevent confusing it with another wire or circuit if electrical system repairs become necessary. If a color coding scheme is used instead of some other unique identification, that color should not be reused for a wire in any unrelated circuits within the same harness. However, 6.2.6 covers low-voltage wiring only and does not apply to shielded cables commonly used for communication purposes, or wiring used in line-voltage circuits.

A.6.3.2 The minimum alternator size is developed using the loads required to meet the minimum continuous electrical load. Most apparatus will actually have loads exceeding the minimum requirements of this standard. The purchaser should review the maximum current output of the alternator versus the load study supplied for the apparatus from the manufacturer for on-scene and responding modes.

A.6.3.3(7) The purchaser should analyze the electrical loads that need to be maintained to fulfill the mission of the apparatus and define those loads for the manufacturer of the apparatus. The purchaser needs to understand, however, that there is a limit to the output capacity of an alternator system on the apparatus's engine and that this standard requires that the apparatus be capable of maintaining the minimum continuous electrical load under the conditions defined in 6.3.2. When that load is exceeded and larger alternators are not available, the purchaser and the manufacturer need to work together to determine how to reduce the minimum continuous electrical load to that which can be sustained under the conditions defined in 6.3.2.

A.6.3.4 The unexpected shutdown of a fire apparatus at a fire can place fire fighters in mortal danger and seriously impact the fire attack. With computer-controlled engines and transmissions as well as electric valves and other controls, an electrical system failure could result in an immediate and total shutdown of the apparatus. The low-voltage monitoring system is intended to provide an early warning of an impending electrical failure and provide enough time to permit operator intervention.

A.6.3.6.1 Reduced crew sizes have forced the apparatus operator to assume many new fireground tasks in addition to that of operating an apparatus. Even if the operator is at the apparatus, he or she is too busy with higher priority tasks to pay much attention to monitoring the condition of the electrical system.

Electrical loads on modern fire apparatus frequently exceed the alternator capacity and can be supplied only by the deep discharge of the apparatus batteries. The high-cycle batteries that are designed to provide the large amount of amperage to crank modern diesel engines are severely damaged when deeply discharged. The automatic load management is intended to protect the electrical system from needless damage while maintaining the operation of essential devices.

It is important that the priority of all managed loads be specified by the purchaser so that, as electrical loads are disconnected from the apparatus's electrical systems, they are shed in an order least likely to affect emergency operations. The optical warning devices in excess of the minimum required in this standard can and should be load managed.

A.6.4 Batteries on fire apparatus should be larger than those used on commercial vehicles because, in addition to starting the vehicle, they need to provide the supplemental energy to power high-amperage, intermittent operation devices such as mechanical sirens and electric rewind hose reels.

Batteries usually have two ratings: "cold cranking amperes," which determine the size engine that can be started, and "reserve capacity," which provides a measure of the total power that can be provided at a much lower constant rate of discharge. Fire apparatus batteries should be sized to have enough cold cranking amperage and reserve capacity to restart the engine after being substantially discharged.

A.6.4.4.3 Overheating of a battery will cause rapid deterioration and early failure; evaporation of the water in the battery electrolyte can also be expected. Batteries in commercial chassis are often installed to take advantage of the cooling effect of the flow of air from motion in over-the-road operation and could be subject to overheating when the apparatus is operated in a stationary position, such as during pumping operations.

A.6.4.5 The purchaser might want to specify a battery disconnect switch for disconnecting the battery for maintenance or storage. This switch should be located where it cannot be operated from the driver's position. The chassis manufacturer should be consulted before such a switch is installed, as such an installation might affect the chassis warranty.

A.6.4.6 Sequential switching devices are sometimes used to minimize the load placed on the electrical system during apparatus start-up for an emergency response.

A.6.4.7 An onboard battery conditioner or charger, or a polarized inlet, should be provided for charging all batteries. The power cord from the onboard charger or battery conditioner should be plugged only into a receptacle protected by a ground-fault circuit interrupter (GFCI) at the shoreline origination point.

A.6.7 SAE J551/2, *Test Limits and Methods of Measurement of Radio Disturbance Characteristics of Vehicles, Motorboats, and Spark-Ignited Engine-Driven Devices*, provides test procedures and recommended levels to assist engineers in the control of broadband electromagnetic radiation and in the control of radio interference resulting from equipment installed on the apparatus. Adherence to the recommended levels will minimize the degradation effects of potential interference sources on fireground communication equipment or other devices susceptible to electromagnetic interference.

Procedures are included to measure the radiation from a single device or the entire apparatus. Compliance could be determined through actual tests on the completed apparatus or predictions based on tests previously conducted on similarly equipped apparatus.

Copyright National Fire Protection Association
Provided by IHS under license with NFPA
No reproduction or networking permitted without license from IHS
Not for Resale

A.6.8 In general, most fire apparatus are considered to be emergency vehicles, and as such, should be equipped with the optical warning devices described in this standard. One exception might be an apparatus that responds over long distances (i.e., over 100 miles) to a wildland fire without the need to call for the right-of-way from other traffic. If the user desires to specify an apparatus without emergency lighting, care needs to be taken to make sure that no conflict exists with local, state, or federal laws for the user's jurisdiction. Even if the apparatus is not equipped with emergency lighting per state or federal law, it is still recommended that the apparatus be equipped with a system of amber flashers or rotating beacons.

A.6.8.2 The upper-level optical warning devices provide warning at a distance from the apparatus and the lower-level optical warning devices provide warning in close proximity to the apparatus. *(See Figure A.6.8.2.)*

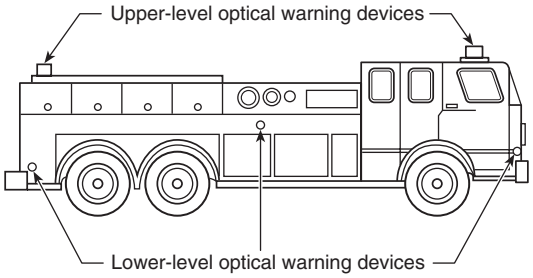

FIGURE A.6.8.2 Upper- and Lower-Level Optical Warning Devices.

A.6.8.7.3 Under typical conditions, the specified optical warning system provides effective, balanced warning. In some situations, however, the safety of the apparatus can be increased by turning off some warning devices. For example, if other vehicles need to pass within close proximity to the parked apparatus, the possibility of distracting other drivers can be reduced if the headlights and lower-level warning lights are turned off. When responding in snow or fog, it could be desirable to turn off forward-facing strobes or oscillating lights to reduce visual disorientation of the apparatus driver.

The intent of the warning light system is to provide full coverage signals through the operation of a single master switch when either responding or blocking the right-of-way. There is no intent to prevent the use of lower levels of warning when the apparatus driver believes such reductions are appropriate, given the vehicle's mission, the weather, or other operational factors. Additional switches downstream of the master switch can be specified by the purchaser to control individual devices or groups of devices.

Purchasers might want to specify traffic flow–type lighting such as amber directional indicators for use in alerting approaching motorists of blocked or partially blocked highways.

A.6.8.11 When a component such as a flasher or power supply is used to operate more than one optical source, the optical sources should be connected so that the failure of this component does not create a measurement point without a warning signal at any point, in any zone, on either the upper or lower level. Although a single optical source can be used to provide warning signals into more than one zone, the possibility of a total signal failure at a measurement point is increased when the same flasher or power supply is used to operate multiple optical sources, each providing signals into more than one zone.

A.6.8.12 Flashing headlights are used in many areas as warning lights and provide an inexpensive way to obtain additional warning to the front of the apparatus. Daylight flashing of the high beam filaments is very effective and is generally considered safe. Nighttime flashing could affect the vision of oncoming drivers as well as make driving the apparatus more difficult.

In some jurisdictions, headlight flashing is prohibited or limited to certain types of emergency vehicles. If flashing headlights are employed on fire apparatus, they are to be turned off when the apparatus headlights are on. They should also be turned off along with all other white warning lights when the apparatus is in the blocking mode.

Steady burning headlights are not considered warning lights and can be illuminated in the blocking mode to light the area in front of the apparatus. Consideration should be given, however, to avoid shining lights into the eyes of oncoming drivers.

A.6.8.13 The minimum optical warning system should require no more than an average of 40 A for the operation of the upper-level and lower-level devices in the blocking mode. On apparatus whose length requires midship lights, no more than 5 A of additional current should be required for the operation of each set of midship lights. Optical warning systems drawing more than 40 A might necessitate modification of the electrical system specified in Section 6.3 in order to supply the additional power required.

See Figure A.6.8.13(a) and Figure A.6.8.13(b) for illustrations of an optical warning system on a large fire apparatus.

A.6.8.13.5 The zone totals reflect the combined performance of the individual optical warning devices oriented as intended on the apparatus when viewed along the perimeter of a circle of 100 ft (30.5 m) radius from the geometric center of the apparatus.

The zone total is the sum of the optical power of all optical sources projecting signals of permissible color into the zone as measured at 5 degree increments along the horizontal plane passing through the optical center H throughout the 90 degrees included in the zone (19 data points). The calculation of zone totals assumes that all optical sources are mounted at the

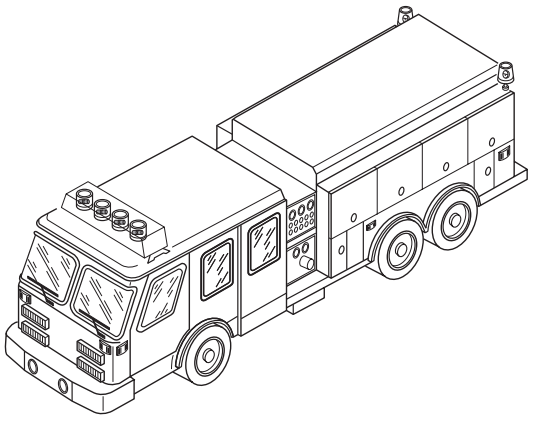

FIGURE A.6.8.13(a) Front and Left Side of an Apparatus with an Optical Warning System.

Copyright National Fire Protection Association
Provided by IHS under license with NFPA
No reproduction or networking permitted without license from IHS
Not for Resale

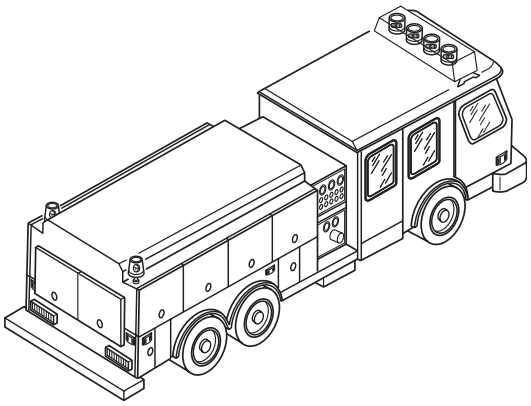

FIGURE A.6.8.13(b) Rear and Right Side of an Apparatus with an Optical Warning System.

geometric center of the apparatus. With the optical center of each optical source oriented as installed, the optical power contributed by every optical source at a given point is taken from the test report, and they are added together to determine the total optical power at that point. The zone total is the sum of the optical power at the 19 measurement points in the zone. The upper- and lower-level optical sources are calculated independently.

The engineering basis of this section permits both the design and the certification of an optical warning system by mathematical combination of the individual test reports for any number of optical warning devices of different color, flash rate, optical source, and manufacturer.

Using the test reports provided by the device manufacturer, the contribution of optical energy from each optical source is determined for every data point. The total candela-seconds per minute of optical energy is determined at each point, and then the zone totals are calculated and compared to Table 6.8.13.5.

A.6.8.14 The minimum optical warning system should require no more than an average of 35 A for the operation of the devices in the blocking mode.

A.6.8.16 In a few cases, a manufacturer might wish to type certify by actual measurement of the optical warning system on an apparatus.

Certification of the actual measurement of the performance of the optical warning system is made with each optical source either mounted on the apparatus or on a frame duplicating the mounting of the device on the apparatus. The performance of the system can be directly measured along the perimeter of a circle with a 100 ft (30.5 m) radius from the geometric center of the apparatus. Each optical warning device used should be certified by its manufacturer as conforming to all the requirements of this standard pertaining to mechanical and environmental testing. Photometric testing of the system should be performed by qualified personnel in a laboratory for such optical measurements.

The test voltages and other details should be as called for in this standard for the photometric testing of individual optical warning devices. The elevation of the photometer, however, could be set at the elevation that maximizes the performance of the upper-level devices and at a second, different elevation that maximizes the performance of the lower-level devices.

With the optical center of each device oriented as installed, the sum of the actual value of the optical power contributed by every optical source is then determined at each measurement point. The zone total is the sum of the optical power at the 19 measurement points in the zone.

Measurements are made to determine all the optical requirements of this standard, including the optical power at each of the required measurement points, the zone totals at the horizontal plane passing through the optical center, and the zone totals at 5 degrees above and 5 degrees below the horizontal plane passing through the optical center. Any upper-level warning devices mounted above the maximum height specified by the manufacturer(s) should be tested to demonstrate that at 4 ft (1.2 m) above level ground and 100 ft (30.5 m) from the mounted device, the optical energy exceeds 50 percent of the minimum required at the horizontal plane passing through the optical center.

A.6.9.2 If the purchaser wishes to have the siren controls within convenient reach of persons riding in both the right and left front seat positions, that should be specified. In some apparatus, multiple control switches might be necessary to achieve convenient reach from the two positions. If other signal devices, such as an additional siren, bell, air horn(s), or buzzer are desired, the type of device and its control location also should be specified.

A.6.10 Depending on how the fire apparatus will be used, the purchaser may want to call for ground lighting, hose bed lighting, work surface and step lighting, interior lighting, or compartment lighting. The purchaser should specify where lights are desired and what level of performance is desired. For many of these lights, there is a problem with mounting them in a way that they will not be damaged by brush, equipment, or vibration.

A.6.13.1 The purchaser might wish to have the entire low-voltage electrical system and warning device system certified by an independent third-party certification organization.

A.7.1.3 The purchaser will need to define how many seating positions are required to carry personnel and might wish to specify the arrangement of the seating positions. Canopy cab extensions with patio door–type closures or separate telephone booth–type personnel enclosures are acceptable means for providing fully enclosed seating positions.

A.7.1.8.1 The H-point is the mechanically hinged hip point of the torso and thigh on the devices used in defining and measuring vehicle seating accommodation in SAE J826, *Devices for Use in Defining and Measuring Vehicle Seating Accommodation.* It is an imaginary point located in two-dimensional space above the seat cushion. The H-point is measured using a tool that simulates human hips and torso of a specific size and weight. The H-point will vary with the size, shape, and material of the seatback, seat frame, and seat cushion. If the H-point measurement is not available, it can be approximated by measuring 5 in. (130 mm) ahead of the seatback and 3 in. (75 mm) up from the nondepressed seat cushion surface.

Suspension-style seats have been developed for long-haul truck operations where the operator is driving for many hours at a time. Acceleration and braking are controlled, with an eye to fuel economy. The suspension-style seat in this duty profile provides a smoother ride and reduces fatigue from long hours in the seats. In contrast, the operator of a fire apparatus typically is making short runs with fast acceleration, quick maneuvers, and sudden braking. The bouncing motion of the suspension seat could hinder the driver's ability to maintain precise control of the throttle, brake, steering wheel, and other driving controls.

Copyright National Fire Protection Association
Provided by IHS under license with NFPA
No reproduction or networking permitted without license from IHS
Not for Resale

Selection of seating options should be made with consideration to the frequency of time that the driver will spend in the vehicle each day, and whether the fire department SOP requires or encourages the occupant of the seat to be equipped with headgear during travel. The use of headgear reduces headroom and increases the chance of injury should the vehicle encounter unexpected road undulation or speed bumps. The effect of such road conditions during high-speed operation might be intensified by the action of a seat suspension. Potential for injury is greatly increased by failure to use or properly adjust the seat belt.

Proper seat adjustment is another issue that should be addressed by the fire department SOPs if apparatus are equipped with suspension seats. Too much pressure in a suspension seat air bag will reduce static headroom height and will negate the potential benefits of the suspension. Too little pressure will cause the seat to bounce excessively. The proper amount of pressure is dependent on the weight of the occupant. Departments where multiple drivers share an apparatus should recognize that adjustments need to be made between each shift. Seat adjustment should not be postponed until the driver is exiting the station on the way to a call.

A.7.1.10.1 SCBA units and other equipment stored in the crew compartment can cause injuries to occupants of the compartment if they fly around the compartment as the result of an accident or other impact.

A.7.3.1 With the requirements for fully enclosed driving and crew compartments, the potential for heat buildup in these areas is greater. The purchaser should be aware of this condition and might wish to specify ventilation fans or air conditioning to keep the ambient temperature in the driving and crew compartment(s) lower.

A.7.3.3 The purchaser should realize that local conditions or operating procedures could cause the passenger to project into the sight pattern of the driver and therefore cause vision obstructions. Seats should be arranged so that SCBA and any passengers wearing protective clothing do not cause vision obstructions. Movement of the passenger should be considered when installing radios, computers, and other equipment so that forward movement or shifting is reduced to a minimum and does not block the driver's vision.

When specifying new apparatus, the purchaser should consider remotely controlled mirrors, especially on the passenger side. The location and mounting of the mirrors should not be placed where door pillars or other obstructions block their view. The location and mounting should be placed so warning lights do not reflect in the mirror to blind the driver's view. The location and mounting should not be placed so that the driver must look through the windshield area that is not wiped by the windshield wiper when viewing the passenger side mirror. Convex and other secondary mirrors should be considered to eliminate blind spots not covered by primary mirrors. Where necessary, heated mirrors should also be considered.

The purchaser should consider specifying a style of mirror that swings when making contact with branches and trees.

A.7.3.4.1 Consideration should be given to providing a tachometer.

A.8.1.1 Compartmentation that is designed to meet the size, shape, and weight requirements of special equipment might be required. Any special equipment to be carried on the apparatus should be identified in the specifications.

A water tank can sweat moisture. Ventilation and drainage should be provided in compartments sharing a common wall with a water tank.

A.8.2 Fire-fighter injuries resulting from climbing on apparatus to retrieve, store, and operate equipment can be minimized if specifications require that equipment be accessible from ground level. Examples of ways to reduce the need to climb on the apparatus include, but are not limited to, using powered equipment racks, using remote control deck guns, lowering of storage areas for preconnected attack lines and using pull-out trays, using slide-out or pull-down storage trays, and providing for the checking of fluid levels from ground level.

A.8.2.2 Where equipment other than that originally mounted on the apparatus is to be carried, the fire department should ensure that the equipment is securely attached to the vehicle with appropriate holders.

A.8.4 SCBA units are typically stored in crew seats, behind bench seats, and on walls, doors, or shelves of storage compartments.

The area where the complete SCBA unit is to be mounted should be arranged to prevent damage to hose, straps, belts, facepiece, regulator, and other attachments. This arrangement should include prevention of wear and tear on the delicate facepiece due to vehicle movement. The facepiece should be stored in a nylon or plastic bag to prevent such abrasion.

Storage of spare hose assemblies, facepieces, regulators, and other SCBA pack accessories should be in a clean and dry area, away from heat-producing devices or mechanical damage. Preferably, the equipment should be stored individually in plastic or noncorrosive bins with dust-free covers. The contents of each bin should be marked with a label on the exterior.

A.8.4.5 SCBA cylinders should always be stored with valve assemblies atop the cylinder.

A.8.4.6 SCBA cylinders should be stored with valve assemblies exposed to the compartment opening or storage area to permit inspection of valves or gauges.

A.8.5.5 The purchaser should consider specifying additional doors or removable panels for service, maintenance, or replacement of components in the water pump installation.

A.8.6.1 Ascending into and descending from certain types of driving and crew compartments is ergonomically difficult and has resulted in falls and subsequent fire fighter injuries. When designing and specifying apparatus, it is strongly suggested that chassis and apparatus manufacturers be consulted concerning available alternatives to make driving and crew compartment access as ergonomically convenient and as safe as possible.

A.8.6.1.2 The intent of step size and placement requirements is to ensure that the fire fighter's foot is supported 7 in. to 8 in. (175 mm to 200 mm) from the toe when the foot is placed on the step in the normal climbing position. The leading edge is not necessarily the side opposite the fastening location.

A.8.6.3 Apparatus are constructed with surface areas that are not intended to be used as stepping, standing, and walking areas. These include cosmetic and protective coverings on horizontal surfaces. During the design stage of the vehicle, purchasers should designate which areas are stepping, standing, or walking areas. It is important that proper materials are selected for the application and local conditions.

Copyright National Fire Protection Association
Provided by IHS under license with NFPA
No reproduction or networking permitted without license from IHS
Not for Resale

When selecting stepping, standing, and walking surfaces, the purchaser should take into consideration the long-term use of the vehicle. The slip resistance of certain surfaces might deteriorate over time. It is also important for the fire department to properly maintain or replace slip-resistant materials as they deteriorate.

A.8.7 Exterior access handrails should be mounted in a way so as to minimize the chances of damage or removal by brushing objects such as trees.

A.8.7.5 The intent is that the apparatus manufacturer does not need to remove and replace those grab handles designed and built into the chassis by a commercial chassis manufacturer. Grab handles inside the door are acceptable.

A.8.8.2 Corrosion protection, commonly known as undercoating, might be advantageous in areas where climatic conditions or road treatment will corrode vehicle components. The material, its application method, and the areas to be protected should be carefully specified so the corrosion protection will adequately protect the vehicle's cab and body sheet metal components subject to corrosive conditions that might be encountered in the fire department's response area.

A.8.8.2.1 The purchaser should give consideration to the choice of paint color(s) as it relates to the total vehicle conspicuousness. In addition, the purchaser needs to specify whether nonferrous body components are to be painted and whether any lettering, numbering, or decorative striping is to be furnished.

A.8.8.3.2 If the purchaser specifies roll-up doors, they should consider affixing a strip of reflective material to the rail area below the door. If the purchaser specifies vertically hinged compartment doors, they should consider affixing 4 in. (100 mm) minimum width reflective stripes or chevron-type reflective stripes on the inside of the doors.

A.8.9.1 The purchaser should specify whether a single or split hose bed is desired and any special arrangements desired for preconnected hose lines.

A.8.9.3 It is also recommended that the purchaser consider specifying some type of cover for the hose compartment. Hinged or removable covers might be advantageous.

A.8.9.7 Many fire departments have experienced fire hose inadvertently coming off apparatus while traveling to and from incidents. Several incidents have resulted in injuries, damage to property, and death. Fire departments and manufacturers have developed various methods of preventing inadvertent deployment including: fully enclosed hose bed covers, buckled straps, hook-and-loop straps, fabric covers, webbing mesh, wind deflectors, and other material restraints or combination of restraints. It is also important that departments develop methods of storing hose and appliances in a manner that does not promote the inadvertent deployment of the hose and appliances.

A.8.9.8 Apparatus provided with booster hose and reel assemblies should have power rewind capability. However, if a manual rewind is provided, attention should be paid to the location of the hand crank. It should be placed in a location that allows the operator to rewind the hose onto the reel without having to climb onto the apparatus.

If the apparatus is to be used or stored in subfreezing conditions, the reel should be equipped with an air chuck mechanism to allow connection of an external source of compressed air to facilitate removal of water within the booster hose assembly. This mechanism should be located on the discharge side of the booster reel valve.

A.8.10 Trailer hitch–type receivers are commonly used as anchor points for both removable winches and rope operations. Removable winches are intended for equipment recovery operations only. Rope operations could involve personnel rescue, which requires the receiver and its anchorage to be designed using higher safety factors.

A.8.11.4.4 If the unit is going to be moved onto and off of a chassis periodically, the purchaser might wish to specify lifting eyes or forklift slots to facilitate the unit's movement. Provisions to prevent accidental breakaway from the chassis should be provided.

A.9.2 If the pump is expected to operate above 2000 ft (600 m) or at lifts of more than 10 ft (3 m) or through more than 20 ft (6 m) of suction hose, the apparatus manufacturer needs to be made aware of this fact in order to compensate for the fact that the power of a naturally aspirated internal combustion engine decreases with elevation above sea level or that additional head loss will be encountered on the intake side of the pump. At an altitude of 2000 ft (600 m), the actual (uncorrected) atmospheric pressure equivalent to the sea level reading of 29.9 in. Hg (101 kPa) is 27.8 in. Hg (94.1 kPa). The purchaser should seek certification from the pump manufacturer that the pump meets the necessary performance requirements under these more strenuous conditions.

Under some conditions, the engine/pump combination is not able to perform at higher elevations. When this occurs, it is necessary to either increase the engine horsepower or de-rate the pump.

The suction hose size shown in Table 9.2(a) is for pump rating purposes only, and other sizes of suction hose can be carried on the fire apparatus for use in the field. The performance of a fire pump can be adversely affected by the design of the suction piping or the addition of valves to the suction side of the pump. Losses due to additional piping or valves that are added to the fire pump suction can be calculated and used to determine pump performance.

A.9.3.1 High points in the suction plumbing should be avoided. If there are high points in the intake plumbing, a prime or suction should also be taken at the top of the high point as well as at the top of the pump suction inlet.

A.9.3.2.1 For best priming and pump performance when priming from the suction with the pump running, the following should be adhered to:

(1) A check valve should be used at the discharge of the pump.
(2) The prime should be taken at the eye of the impeller or at the top of the intake to the pump.
(3) A smooth bell-shaped strainer inlet should be used on the end of the suction hose. A foot valve should not be used.
(4) Suction hose should only be as long as necessary.
(5) There should be no lumps in the suction hose.

Departments that need to attain a draft while conducting operations off of tank water will find that adding a priming device selector valve or second priming system control valve to allow attaining a draft on the outboard side of the gated pump suction valve will eliminate the danger of cavitation while supplying attack lines. A vacuum line is run to the outboard side of the valve and is connected through a selector valve to the priming device. Side, front, and rear selector settings can be arranged to allow priming off of any side of the unit with one priming device.

Copyright National Fire Protection Association
Provided by IHS under license with NFPA
No reproduction or networking permitted without license from IHS
Not for Resale

A.9.4 Figure A.9.4 shows a typical plumbing schematic for an apparatus with a centrifugal pump. The valves on the schematic are identified by numbers corresponding to a valve numbering system that is used by a number of federal wildland fire-fighting agencies. This numbering system is detailed in the schematic in Figure A.9.4.

A.9.4.1 If the unit might be stored in areas prone to freezing, the purchaser should consider specifying freeze-protected gauges and air bleeder valves near the connection to the gauges.

A.9.4.3 Pumps and piping frequently required to pump salt water, water with additives, or other corrosive waters should be built of bronze or other corrosion-resistant materials. For occasional pumping of such water, pumps built of other materials are satisfactory if properly flushed out with fresh water after such use. Where corrosive water is being pumped and the pump and piping are not made of corrosion-resistant materials, the placement of anodes in the pump might minimize the corrosive effects.

The term *all bronze* indicates that the pump's main casing, impeller, intake and discharge manifolds, and other principal components that are exposed to the water to be pumped, with the exception of the shaft bearings and seals, are made of a high-copper alloy material. Use of like materials for the pump and piping is recommended.

Corrosion effects are proportional to the mass relationship of bronze to iron. It is, therefore, preferable to use similar materials for the pump and piping. Where both iron and bronze are used, it is preferable to keep the mass of the iron larger than that of the bronze.

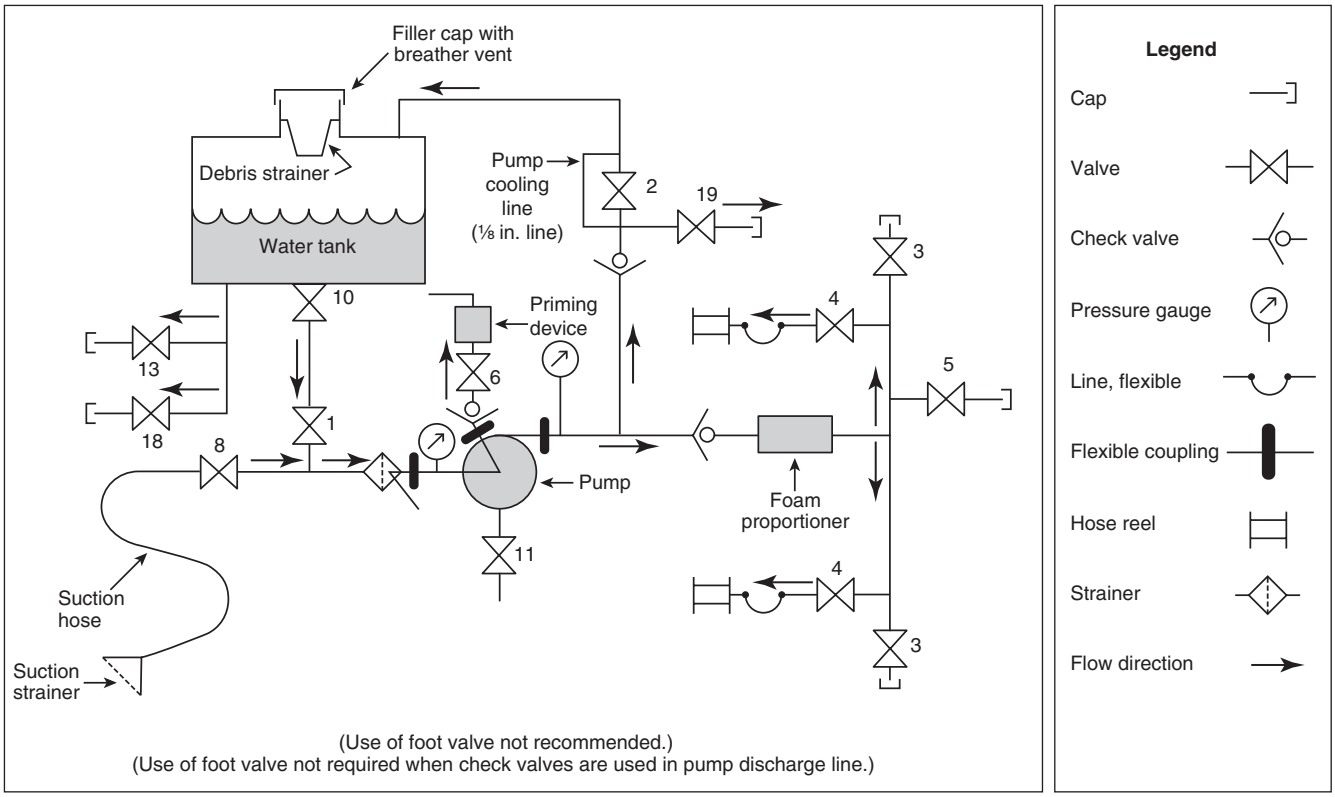

Valve Numbering System

The numbering system below has been adopted by the USDA Forest Service (other systems might also be available).

No. 1 from tank to pump
No. 2 from pump to tank
No. 3 from pump to overboard discharge
No. 4 from pump to hose reel or basket discharge
No. 5 from pump to small auxiliary discharge (¾ in.)
No. 6 from pump to priming device
No. 7 adjustable pressure relief valve*
No. 8 from overboard suction intake to pump
No. 9 reserve supply from tank to pump*
No. 10 tank to piping shutoff valve
No. 11 pump or piping drain valve
No. 12 pump coolant clean-out*
No. 13 gravity tank drain
No. 14 foam-differential-valve shunt*
No. 15 pump transfer valve*
No. 16 engine cooler line*
No. 17 pump bypass*
No. 18 low volume gravity (back pack fill)
No. 19 water-only valve for eductor or water transfer
No. 20 feed #2, #13, and /or #19*

**Valve not utilized in this diagram.*

FIGURE A.9.4 Typical Plumbing Schematic for a Centrifugal Pump.

Copyright National Fire Protection Association
Provided by IHS under license with NFPA
No reproduction or networking permitted without license from IHS
Not for Resale

A.9.5.1 Intakes can be larger than the size of the suction hose specified in Table 9.2(a). It is also advantageous to have valves on one or more of the intakes. On wildland fire apparatus the intake is usually a male thread fitting. The purchaser should specify if larger intakes are to be provided, if the intakes are to be male or female thread fittings, and also if any of the intakes are to be equipped with valves.

Intakes at the front or rear of the apparatus, or otherwise specially situated, might not allow drafting rated capacity at rated pressure. The purchaser should specify the flow rates required from auxiliary intakes, especially front and rear intakes or other intakes located 10 ft (3 m) or more away from the pump. When provided, the purchaser should also consider requiring the manufacturer to certify the actual flow rates from auxiliary intakes.

A.9.5.1.1 The purchaser should specify if there are any state regulations requiring backflow devices for hydrant operation. Backflow devices might restrict pump performance from draft.

A.9.5.5 The bleeder valve should be used prior to the removal of a hose or a cap or other closure connected to an intake. The bleeder valve should also be used while filling a hose connected to an intake with water. Failure to use the bleeder valve in these situations might result in serious injury or death.

A.9.5.7.2 Sizing of the openings of the strainer(s) is intended for debris of generally uniform dimensions. It is recognized that debris of nonuniform dimensions — that is, long in relation to cross section — might be able to pass through the strainer(s) while not being able to pass through the pump.

A.9.6.1 The flows listed for each outlet size are minimum and are for rating purposes only. If piping and valving are sufficient, much higher flows for a given outlet size might be achievable.

A wildland fire apparatus might need a check valve in the plumbing, and the discharge side of the pump is the best location for the check valve, for the following reasons:

(1) With a check valve in the discharge line of the pump, the suction plumbing and suction hose will not be subject to high pressures when the pump is shut down when pumping a high vertical distance [such as 600 ft (180 m) or more]. [Suction hose is generally not rated for high pressure; it is usually rated for about 100 psi (690 kPa).]
(2) With the check valve located in the discharge line of the pump, the pump can be primed with a discharge valve open.
(3) A check valve located in the discharge line of the pump will prevent foam solution from flowing back into the fire apparatus water tank or other water source.
(4) With a check valve in the plumbing of a wildland fire apparatus, the water in a long hose lay will not be lost when the pump is shut down due to running out of water.
(5) Higher suction flow rates and higher suction lifts can be obtained when the check valve is in the discharge line of the pump, as opposed to the use of a foot valve.
(6) With a check valve in the discharge line of the pump or the use of a foot valve, the pump will hold prime when the pump is shut down.
(7) With the use of a check valve in the discharge line of the pump, the suction plumbing can generally be more easily drained to prevent damage from freezing.

If a check valve is used in the discharge plumbing or other location, it should be properly sized to reduce pressure drop. It should have a drain "down stream" of the checking device to permit water that might freeze and cause damage to be drained.

Ideally, having no intake or discharge connections at the operator's position would simplify and improve safety for the operator. If complete removal of these connections is impractical, the reduction and careful placement of these connections, with operator safety in mind, would improve the situation considerably.

If a deck gun or monitor is to be mounted on the top of the apparatus, consideration should be given to designing the system so it can be operated without the need for a person to climb to the top of the apparatus. This can be accomplished by using a remotely operated monitor or by positioning the device so it is operable from the pump operator's position.

Many fire departments have found it useful to color code the labels used to identify the various discharge and intake controls. While this process can simplify pump operations, it can also create confusion if a pattern is not followed on all apparatus in the department. For standardization, the color-coding scheme in Table A.9.6.1 is recommended for all new apparatus labels, as applicable.

Table A.9.6.1 Color Scheme for Labels on Discharge and Intake Controls

Discharge/Intake Controls	Color
Preconnect #1 or front bumper jump line	Orange*
Preconnect #2	Red*
Preconnect #3 or discharge #1	Yellow*
Preconnect #4 or discharge #2	White*
Discharge #3	Blue
Discharge #4	Black
Discharge #5	Green
Deluge/deck gun	Silver
Water tower	Purple
Large-diameter hose	Yellow with white border
Foam line(s)	Red with white border
Booster reel(s)	Gray
Intakes	Burgundy

* Because the vast majority of fires are extinguished using preconnected lines, a fire department should give consideration to matching the hose jacket color to the color of these labels. Fire departments using this system have reported an improvement in fireground operations.

A.9.6.4 This standard does not specify where the valves should be located on discharge lines. Based on local operations, the purchaser should specify whether discharge valves are to be centralized at the pump operator's position or installed at the hose connection point. If the apparatus is designed for pump and roll, additional control might be desired inside the driving compartment.

Consideration should also be given to having the full pump discharge pass through check valves. One advantage of such an arrangement is that when pumping uphill and the pump is shut down, it prevents draining of the hose lay; it prevents applying pressure to the suction plumbing, which may not be rated for the pressure applied; and if foam is being used, it prevents contaminating the water tank or the outside water source such as a lake, stream, or water main with foam. Other advantages include being able to prime the pump if a discharge valve is left open, and maintaining the prime without the need for a foot valve if the pump is shut down. Pumps can be primed from a greater depth and will pump more water if a foot valve is not used.

--`,,```,,,,````-`-`,,`,,`,`,,`---

Copyright National Fire Protection Association
Provided by IHS under license with NFPA
No reproduction or networking permitted without license from IHS
Not for Resale

A.9.6.4.2 Control of discharges on apparatus are now available in pull-type actuators, trunnion or swing valves, flexible push/pull controls, gear-operated hand wheel controls, and hydraulic, air, and electric operators. These are available with either quick-operating or slow-operating valve mechanisms. The nozzle and hose reaction and "operational effort" for high flow or high pressure discharges are critically important to many fire departments. Because of the variations in types of individuals and characteristics of operators involved with pump operations, a purchaser should carefully evaluate valve controls. Slow-closing, gear-operated, and other power-operated valves should be considered for valves 3 in. (75 mm) and larger.

A.9.6.6 The flow should be no greater than 1 percent and no less than ½ percent of the pump's rated flow at the pump classification pressure or 150 psi (1000 kPa), whichever is less, or up to 1.5 gpm (6 L/min) at 150 psi (1000 kPa) regardless of the pump classification pressure, or 1 gpm (4 L/min) if the pump classification pressure is below 150 psi (1000 kPa).

A.9.6.12 The water-only (no foam) discharge valve is used to off-load water, without any foam concentrate in it, to another unit or to operate an ejector and keep foam solution out of the unit's water tank.

A.9.8.2 It might also be desirable to have a pressure gauge in the cab in view of the driver when the pump that is being used in a pump-and-roll operation is driven by a separate engine.

A.9.9 The indicator lights and interlocks specified in this section are minimums. Some manufacturers or users might choose to add additional indicator lights or interlocks.

A.9.9.1.2 Pumps are operated from the side, top, front, or rear of the vehicle, and stationary pumping requires that no power is applied to the wheels while pumping. Therefore, it is essential that any controls that could apply power to the wheels while pumping be equipped with a means to prevent dislocation of the control from its set position in the pumping mode.

A.9.9.2.1 Completion of the pump shift might require that the chassis transmission be shifted into pump gear.

A.9.9.3.1 Completion of the pump shift might require that the chassis transmission be shifted into pump gear.

A.9.9.13 The purpose of a pressure control system is to control the discharge pressures in order to protect fire fighters who are operating hose streams as well as to protect discharge hose from damage in the event attack hose streams are shut off or other valves are closed, reducing flow rates.

The system could consist of a discharge relief valve, a pressure regulator that controls the speed of the pump, an intake relief valve, or any combination of these devices. Pressure control systems will relieve excess pressure when valves are closed in a normal manner, but some water hammer conditions could occur due to valves being closed so quickly that the system cannot respond fast enough to eliminate damage to equipment. Proper fireground procedures are still necessary.

A.9.9.13.1 Pressure control systems can be supplied in the following forms:

(1) Integral with the pump and supplied by the pump manufacturer
(2) As an external system of components supplied by the apparatus manufacturer
(3) As an external control system provided by a pressure control manufacturer

Pressure governors control the engine speed, which relates directly to the net pump pressure: if the speed is raised, the pressure goes up; if the speed is lowered, the pressure goes down.

Discharge relief valves control pressure by passing water from the discharge side of the pump back into the intake side of the pump. This type of system works in a pressure differential of approximately 70 psi to 90 psi (500 kPa to 600 kPa) between the intake and discharge sides of the pump. If the pressure differential is not present, the discharge relief valve might not control a pressure rise completely.

If either a discharge relief valve or a pressure governor is used with high incoming inlet pressures, an intake relief valve or total control system must be added.

In the case where an intake relief valve is selected, it must be of sufficient size and response time to handle the pump performance range. It must also be easily controlled by the pump operator so that this incoming pressure can be adjusted for each incident. For best results, the operator should set the intake relief valve to operate at 90 psi (600 kPa) below the desired discharge operating pressure.

The pressure control system should be certified by the appropriate manufacturer or an independent third-party certification organization. Because of the importance of these systems, the purchaser might wish to have performance tests conducted on the installed system.

A.9.9.13.2 A relief valve system equipped with a means to indicate when the system is in control of the pressure can help prevent cavitation damage to the pump. Such means can include a light or discharge of water to atmosphere.

A.9.10 If the apparatus is equipped with an automatic transmission, it is acceptable to lightly apply throttle and brakes for short periods of time to maintain a maximum speed of 2 mph (3.2 km/hr).

If the vehicle is to be used for simultaneous "pump-and-roll" and fire fighting while the vehicle is moving, remote controlled nozzle(s) or turret(s) should be considered. *(See also A.6.3.1 of NFPA 1500, Standard on Fire Department Occupational Safety and Health Program.)*

A.9.11.1.3 The purchaser might want to consider an instruction plate using federal wildland fire-fighting agencies valve numbering system mounted at the pump operator's position giving basic instructions on valve positions for standard fire-fighting operations, including the following:

(1) Tank to fire
(2) Intake (suction) to fire
(3) Intake (suction) to tank

A.9.11.2.1.2 Where tests are performed inside a structure or other location having limited air circulation, carbon monoxide monitoring equipment should be used. Such equipment should be checked and calibrated regularly and should include a suitable warning device.

A.9.11.2.3.1 Some blank test data forms for recording the test readings and other necessary data should be provided.

A.9.11.2.3.5 Where an engine is operating at or near full power while stationary, the heat generated could raise the temperature of certain chassis or pumping system components above the level that, when touched, can cause extreme discomfort or injury. However, as long as the apparatus could be operated and used satisfactorily for the required duration of the test under such conditions, it should be considered acceptable.

Copyright National Fire Protection Association
Provided by IHS under license with NFPA
No reproduction or networking permitted without license from IHS
Not for Resale

The suction lift can be determined either by measuring the negative pressure (vacuum) in the pump intake manifold with a manometer or other suitable test gauge that measures vacuum accurately or by adding the vertical lift and the value of friction and entrance loss from Table 9.2(b) or Table 9.2(c). To be accurate, gauge readings should be corrected for the difference between the height of the gauge and the centerline of the pump intake, but usually this is not large and therefore not significant, allowing this correction to be ignored. It is best to place the gauges at the same level or very close to the same level as the pump intake. If the gauges are at a different level from the pump intake, the correction is 0.433 psi per foot (9.8 kPa per meter) of difference.

The net pump pressure can be calculated by using the following formula:

U.S. units

$$P = D + (H \times 0.5)$$
or
$$P = D + 0.43\ (L + F)$$

where:
P = net pump pressure (psi)
D = discharge gauge pressure (psi gauge)
H = manometer reading (in. Hg)
L = vertical lift (ft)
F = friction and entrance loss (ft of water)

SI units

$$P_m = D_m + H_m$$
or
$$P_m = D_m + F_m + 9.8\ L_m$$

where:
P_m = net pump pressure (kPa)
D_m = discharge gauge pressure (kPa gauge)
H_m = manometer reading (kPa)
L_m = vertical lift (meter)
F_m = friction and entrance loss (kPa)

A.10.2.1 The maximum governed speed is established by the engine manufacturer as a safe limit of engine speed. The governor prevents the engine from exceeding the safe speed. Most engine manufacturers allow a plus tolerance of 2 percent for maximum governed speed.

A.10.2.2 A shutdown not controlled by the pump operator during the fire-fighting operations can result in loss of water flow from the pump, which could severely endanger personnel.

A.10.5.1.1.1 See A.5.2.4.1.1.1.

A.10.5.1.2 See A.5.2.4.1.2.

A.10.5.1.3.1 See A.5.2.4.1.3.1.

A.10.6.2 Emissions from exhaust discharge pipes should be directed away from any fire-fighting tools, since such emissions contain an oily substance that could make the tools difficult to handle and possibly dangerous to use.

A.10.7.1 If a switch to stop the engine is provided in the driving compartment, it should be a momentary switch and should be within convenient reach of the driver. A pumping engine running light might be desired in the driving compartment.

A.10.8.3 If the vehicle batteries are used, the electrical requirements of the pump engine need to be considered when sizing the vehicle's charging system. *(See 6.3.1 and 6.3.2.)*

A.10.10 The fuel tank(s) and systems that meet 49 CFR 393.65, "All Fuel Systems," 49 CFR 393.67, "Liquid Fuel Tanks," or 49 CFR 393.69, "Liquefied Petroleum Gas System," should be used when available. Among other requirements, these regulations do not allow gravity or siphon feeds for other than diesel fuel tanks. Fuel withdrawal fittings have to be above normal levels of fuel in the tank when the tank is full.

A.10.10.2 It is recommended that the pump engine use the same type of fuel as the chassis engine.

A.11.2.2 The purchaser should indicate in the specifications if access to the interior of the tank is required.

A.11.2.3 Water tanks can appear in several different configurations, such as round, elliptical, rectangular, or T-shaped. Handling characteristics of the apparatus can be greatly affected by its vertical and horizontal centers of gravity. The purchaser should indicate the filling and dumping rates required if those rates exceed the requirements of this standard and any other local needs, and let the apparatus manufacturer design the tank shape to best meet the axle-loading and center-of-gravity requirements.

A.11.2.5 The design of a water tank can be a critical factor in the handling characteristics of fire apparatus. If water is free to travel either longitudinally or laterally in a tank, as would be the case if the tank were half full, a tremendous amount of inertia can be built up that will tend to force the fire apparatus in the direction the water has been traveling. When the water reaches the end of the tank, this sudden application of force can throw the fire apparatus out of control and has been known to cause the fire apparatus to turn over or skid when going around a curve or coming to a sudden stop. The only methods for preventing such accidents are to restrict or disrupt the movement of the water so that the inertia will not build up in one direction. This is done with the installation of swash partitions to either contain the water in smaller spaces within the tank (containment method) or disrupt its momentum by changing its direction of motion (dynamic method). The partitions in a containment system create compartments that are interconnected by openings between them so that air and water can flow at the specified rate when filling and emptying the tank. The partitions in a dynamic system are often staggered in an arrangement designed to change the direction of the water and turn it into a turbulent motion that absorbs much of its own energy.

A.11.4.1.4 An excessive flow rate when filling a tank could result in a pressure buildup in the tank that could cause permanent damage or failure.

A.11.4.2 Adequate venting is usually achieved when the vent area is at least one quarter the area of the tank outlet. If operations require filling or draining of the tank at rates in excess of the rated capacity of the pump, increased venting capability might be needed. The required rate of filling or draining the tank should be specified by the purchaser.

The vent or overflow should discharge behind the rear axle. During heavy braking, if water is allowed to fall in front of the rear tires, braking force will be decreased and an uncontrollable spin may develop. Having water fall in front of the rear axle can be avoided by directing the discharge vent or overflow tube outlet so that any discharge from the overflow tube will fall behind the rear axle. This method can be used effectively on integral units. Discharge from the vent or overflow can also be avoided by placing the vent or overflow outlet

Copyright National Fire Protection Association
Provided by IHS under license with NFPA
No reproduction or networking permitted without license from IHS
Not for Resale

at the rear of the tank in a position where no water will be discharged during heavy braking. This method can be used effectively on slip-on units.

A.11.4.3 When designing fire apparatus plumbing, galvanic corrosion protection for dissimilar metals should be provided. The tank fill flow rate cannot exceed the vent capabilities of the tank, or the tank will be damaged.

A.11.4.3.1 If a larger fill line is desired, the buyer should consult with the manufacturer on construction of the tank inlet location and any required reinforcement or alternation of the tank baffles. It is necessary to design the tank with venting and overflow capability for the maximum fill rate.

A.11.4.3.2 A locking-type quarter-turn valve suitable for throttling service should be used.

A.11.5 If the tests of some components of the apparatus are being certified by an independent testing organization, the purchaser might wish to specify that the water tank capacity also be certified by the independent testing organization.

A.12.1 The purchaser should specify the total feet of suction hose required, the diameter, the length of each section, and the size of the couplings. The size of the suction hose specified in Table 9.2(a) relates to pump certification only. Other sizes of suction hose, compatible with local operations, might be specified.

A.12.2 The requirements of wildland fire suppression varies in different communities and wildland areas. This will necessitate additions to the equipment required. The following list of additional equipment is recommended to be carried on wildland fire apparatus. The equipment list provided does not detail each item sufficiently for purchasing purpose. The purchaser should provide detailed specifications for any equipment, such as the following, that is to be purchased with the fire apparatus:

(1) Fire hose
(2) One nozzle sized to the pump and hose carried
(3) Two spanner wrenches, appropriate for fittings on hose carried
(4) One round shovel
(5) One head lamp for each seating position
(6) One backpack pump
(7) 20 ft (6 m) hard suction
(8) Suction strainer basket
(9) Universal hydrant wrench

A.12.2.1(1) Wheel chocks provide an increased margin of safety for vehicle stability when parked on slopes. When making a wheel chock selection, fire departments should take into consideration the type of surfaces encountered in their operation. For example, wheel chocks may perform differently when used on slippery or non-paved surfaces.

A.13.1 It is important for the purchaser to understand the types and properties of mechanical foam and its application to specify a foam proportioning system properly. Specific information regarding foam concentrates and their application is available in NFPA 11, *Standard for Low-, Medium-, and High-Expansion Foam*. Information on foam concentrates for Class A fires is available in NFPA 1150, *Standard on Foam Chemicals for Fires in Class A Fuels*.

The following terms are not used in this document but are associated with foam proportioning systems and are included here to aid understanding.

Aerated Foam. The end product of a discharge of foam solution and air.

Aspirate. To draw in air. Nozzle aspirating systems draw air into the nozzle to mix with the agent solution.

Aspirated Foam. The end product of a mechanically induced air stream that is drawn into the foam solution at atmospheric pressure to create foam. The aeration is generated by the energy of the foam solution stream.

Batch Mix. The manual addition of foam concentrate to a water storage container or tank to make foam solution.

Foam Blanket. A body of foam used for fuel protection that forms an insulating and reflective layer from heat.

Foam-Capable. A foam-capable fire apparatus is a fire apparatus carrying aspirating foam nozzle(s) and is equipped with an automatic regulating foam proportioning system injecting foam concentrate into the discharge or pressure side of the water pump.

Injector. A device used in a discharge or intake line to force foam concentrate into the water stream.

Proportioning Ratio. The ratio of foam concentrate to water, usually expressed as a percentage.

Surface Tension. The elastic-like force in the surface of a liquid that tends to bring droplets together to form a surface.

Wetting Agent. A chemical that reduces the surface tension of water and causes it to spread and penetrate more effectively than plain water, but does not foam.

A.13.2 Foam proportioning systems can be designed with the following features:

(1) The ability to proportion different types of foam concentrate, including Class A and Class B foam concentrates
(2) The ability to proportion foam concentrate at fixed or variable proportioning ratios
(3) The ability to proportion foam concentrate into single or multiple-discharge outlets
(4) The ability to supply foam solution and water simultaneously from multiple-discharge outlets
(5) Manual or automatic foam proportioning system operation

A.13.2.1 In-line eductor foam proportioning systems are installed in the water pump discharge as a permanently installed device or as a portable device. Water is forced through the eductor venturi by water pump discharge pressure, creating a vacuum that causes foam concentrate to be pushed by atmospheric pressure into the eductor (into the water stream) at the design rate of the device *[see Figure A.13.2.1(a)]*. By design, a nonrecoverable pressure drop of 30 percent or greater is required for eductor operation. The maximum recovered pressure, including friction loss and static head pressure, is nominally 65 percent of the inlet pressure to the eductor. The in-line eductor is a manually regulated foam proportioning system.

A variable flow bypass eductor system is a modification of the in-line eductor foam proportioning system. An eductor is placed in a bypass line around the main line water flow control valve so that when the valve is adjusted to produce water flow through the bypass eductor, foam concentrate is drawn into the eductor (into the water stream) *[see Figure A.13.2.1(b)]*. The foam solution in the bypass line is then joined with the main line water flow downstream of the water flow control valve. The variable flow bypass eductor is a manually regulated foam proportioning system.

--`,,```,,,,````-`-`,,`,,`,`,,`---

Copyright National Fire Protection Association
Provided by IHS under license with NFPA
No reproduction or networking permitted without license from IHS
Not for Resale

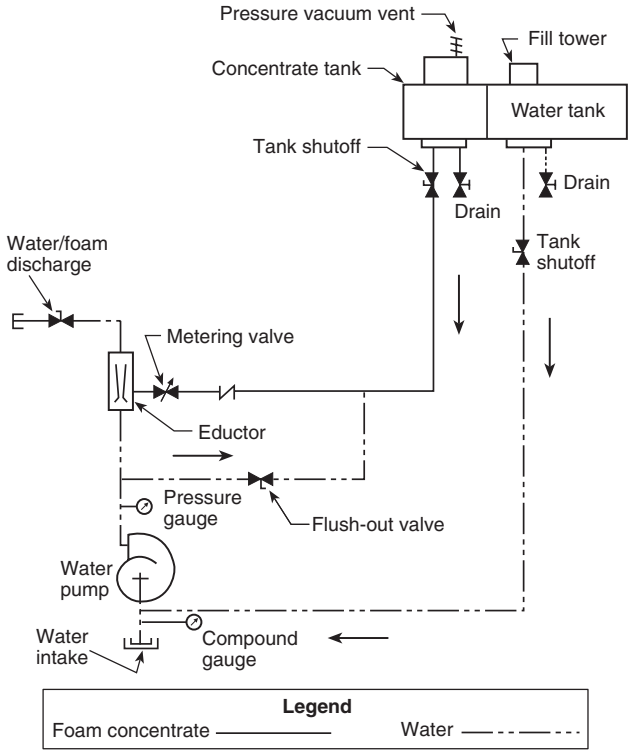

FIGURE A.13.2.1(a) In-Line Eductor Foam Proportioning System.

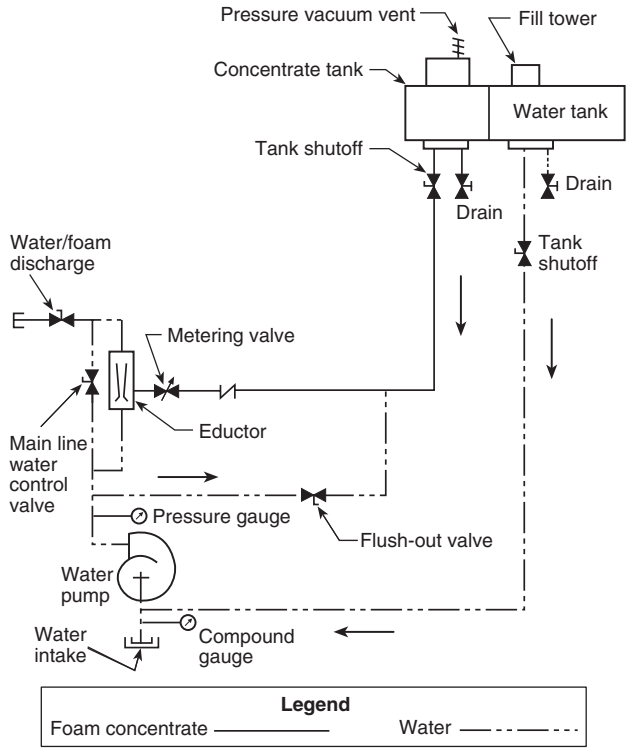

FIGURE A.13.2.1(b) Variable Flow Bypass Eductor System.

A variable pressure eductor is another modification of the in-line eductor foam proportioning system. This type of eductor is designed to automatically adjust the area of the eductor venturi to compensate for changes in water pressure at the inlet of the device. Better performance (less pressure loss) can be achieved by having the eductor in the straight line position with the main line and the water flow control valve in the off-set position. The reason for this is that the small eductor sets the pressure drop and the water control valve merely matches the pressure losses of the eductor and fittings directing flow to the eductor. If the eductor flow has to flow through 2 branching tees and 2 elbows, the water control valve must match these pressure losses. If the eductor is in the straight line position, pressure losses of 2 branching tees and 2 elbows are not present in the eductor branch of the variable flow bypass eductor; and therefore, the total pressure loss across the proportioning system is only that of the eductor. The variable pressure eductor is a manually regulated foam proportioning system.

A.13.2.2 Self-educting master stream nozzles are mounted on the discharge side of the pump. These devices make up a complete foam proportioning system consisting of a foam proportioner and application device (nozzle).

A.13.2.3 An intake-side foam proportioning system is a manually regulated system. An in-line device installed in the water pump intake line provides a connection through a foam concentrate metering valve to the foam concentrate tank. The vacuum created by the water pump allows atmospheric pressure to push foam concentrate directly into the pump intake. Hydrant or relay operation is not possible with this type of foam proportioning system.

A.13.2.4 Around-the-pump proportioning systems operate with an eductor installed between the water pump discharge and the intake. A small flow of water from the water pump discharge passes through the eductor, which creates a vacuum that causes foam concentrate to be pushed into the eductor and discharged into the pump intake. Around-the-pump foam proportioning systems require a pressure differential of 30 percent to 50 percent of inlet pressure for efficient operation.

A manual around-the-pump proportioning system utilizes a manually adjustable foam concentrate metering valve to control the proportioning ratio. *[See Figure A.13.2.4(a).]*

A flowmeter-sensing around-the-pump proportioning system utilizes a flowmeter-sensing system to monitor total solution flow and foam concentrate flow. The flow data are transmitted to an electronic control that controls the proportioning ratio through a foam concentrate metering valve. *[See Figure A.13.2.4(b).]*

Use of an around-the-pump proportioning system does not relieve the requirement for a water-only outlet as required in 9.6.12.

A.13.2.5 Balanced pressure foam proportioning systems are installed on the discharge side of the water pump. Two orifices discharge water and foam concentrate into a common ratio controller (proportioner) located in the water pump discharge. By adjusting the area of the orifices to a particular ratio, the percentage of injection can be controlled if the intake pressures are equal. The method of controlling or balancing the foam concentrate pressure with the water pressure varies with different balanced pressure system designs. The two basic types of balanced pressure systems are systems without a foam concentrate pump and systems with a concentrate pump. Balanced pressure foam proportioning systems generally are automatic regulating foam proportioning systems.

Copyright National Fire Protection Association
Provided by IHS under license with NFPA
No reproduction or networking permitted without license from IHS
Not for Resale

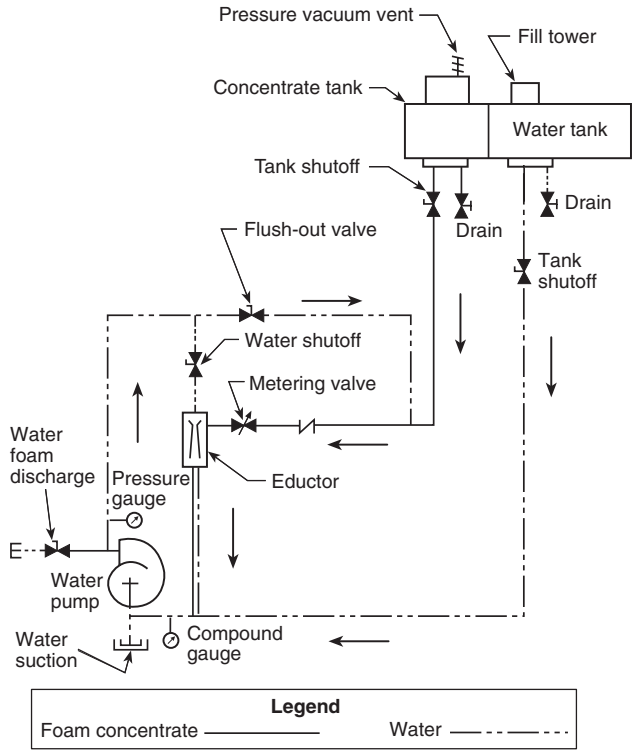

FIGURE A.13.2.4(a) Manual Around-the-Pump Proportioning System.

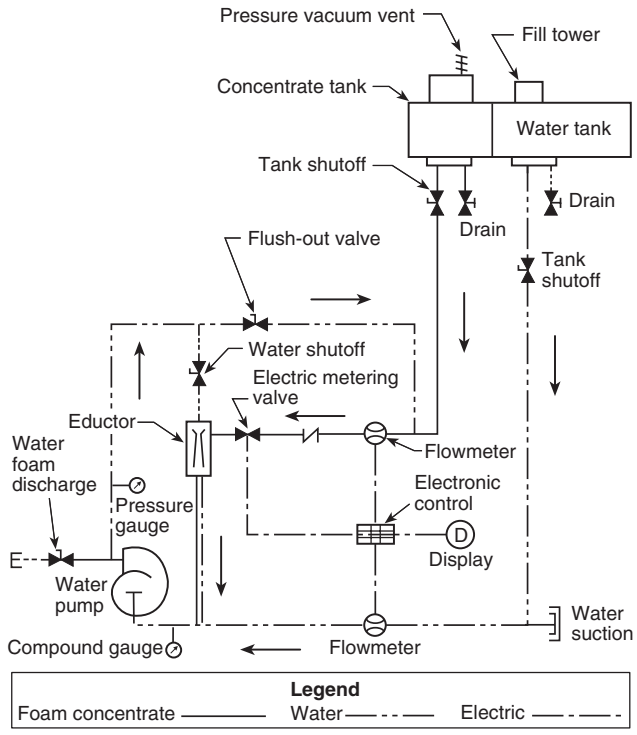

FIGURE A.13.2.4(b) Flowmeter-Sensing Around-the-Pump Proportioning System.

Balanced pressure systems without a foam concentrate pump are referred to as "pressure proportioning systems" *[see Figure A.13.2.5(a)]*. These systems utilize a pressure vessel with an internal bladder to contain the foam concentrate. When in operation, water pump pressure is allowed to enter the pressure vessel between the shell and the internal bladder to exert pressure on the internal bladder. The foam concentrate is forced out of the bladder to the foam proportioner at a pressure equal to the water pump pressure.

Two basic types of balanced pressure foam proportioning systems utilize a foam concentrate pump: a bypass system and a demand system. Foam proportioning system operation is not affected by water pump intake pressure or interrupted while refilling the foam concentrate tank in these types of foam proportioning systems.

The bypass system utilizes a valve in the foam concentrate pump recirculating line that balances the foam concentrate and water pressure by bypassing excess foam concentrate. *[See Figure A.13.2.5(b).]*

The demand system is designed to control the speed of the foam concentrate pump, resulting in control of the pump discharge pressure to achieve a balance of foam concentrate and water pressure within the system. *[See Figure A.13.2.5(c).]*

A.13.2.6 Direct injection foam proportioning systems utilize a foam concentrate pump to inject foam concentrate directly into the water pump discharge. Foam proportioning system operation is not affected by water pump intake pressure or interrupted while refilling the foam concentrate tank. Direct injection foam proportioning systems generally are automatic regulating foam proportioning systems.

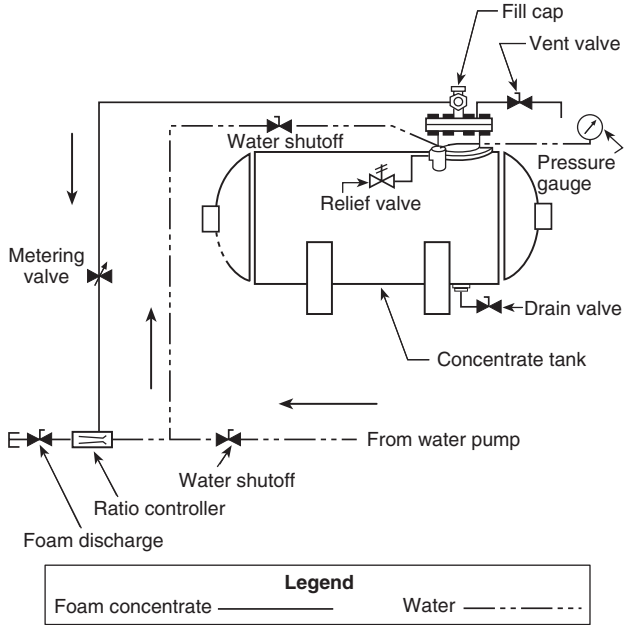

FIGURE A.13.2.5(a) Pressure Proportioning Balanced Pressure Foam Proportioning System.

Copyright National Fire Protection Association
Provided by IHS under license with NFPA
No reproduction or networking permitted without license from IHS
Not for Resale

Automatic flow-sensing direct injection foam proportioning systems utilize an in-line flowmeter(s) to monitor the system operating conditions. System operating data are transmitted to an electronic control, which controls the proportioning ratio. Two different flow-sensing systems are available:

(1) An electronic control receives electronic signals corresponding to the proportioning ratio from the control panel and water flow data from the flowmeter. The electronic control then commands the foam concentrate pump module to deliver foam concentrate at the proportional rate. *[See Figure A.13.2.6(a).]*

(2) An electronic control receives electronic signals corresponding to the foam concentrate flow from a foam concentrate flowmeter, the proportioning ratio from the control panel, and water flow data from the water flowmeter. The electronic control controls the proportioning ratio through a foam concentrate metering valve. *[See Figure A.13.2.6(b).]*

A.13.2.7 In a water motor foam proportioning system, a water motor drives a positive displacement foam concentrate pump. The water motor can be of either a positive displacement type or a turbine type. Water motor foam proportioning systems are automatic regulating foam proportioning systems.

Where a positive displacement water motor drives the foam concentrate pump, the ratio of the water motor displacement to the displacement of the foam concentrate pump is the ratio of the desired foam solution. A positive displacement water motor proportioning system requires no external power. *[See Figure A.13.2.7.]*

A.13.3.1 Foam proportioning systems that inject foam concentrate into the water pumping system at a higher pressure than the water pressure have the potential to force foam concentrate or foam solution into an external water source. This condition will occur when there is no water flowing and the foam proportioning system is activated in the automatic mode. Backflow prevention devices, or any device that creates additional friction loss in the system, should be installed only

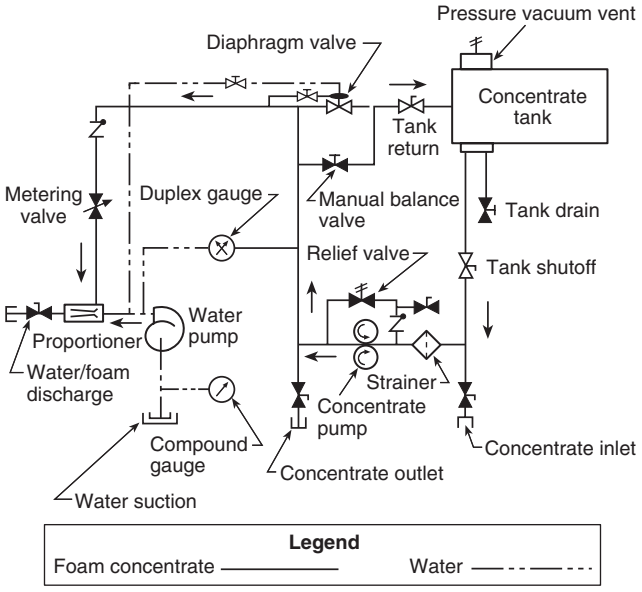

FIGURE A.13.2.5(b) Bypass Balanced Pressure Foam Proportioning System.

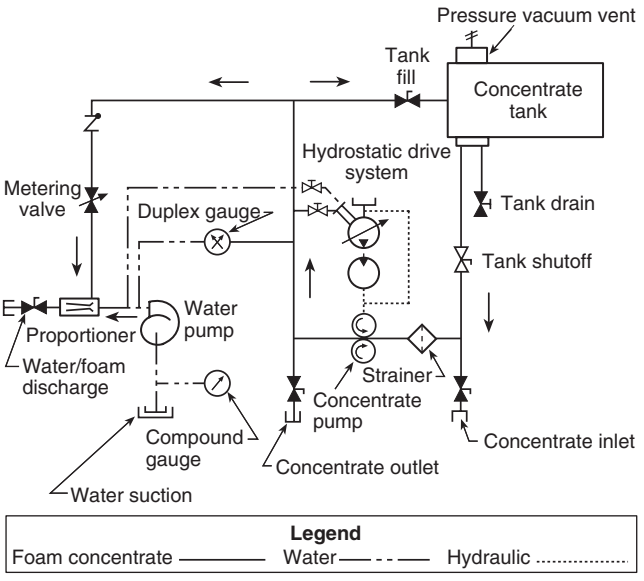

FIGURE A.13.2.5(c) Demand Balanced Pressure Foam Proportioning System.

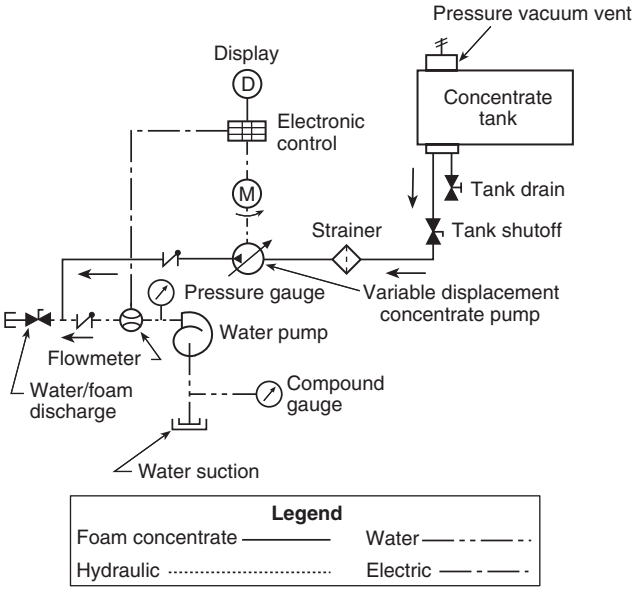

FIGURE A.13.2.6(a) Single Meter Flow-Sensing Direct Injection Foam Proportioning System.

Copyright National Fire Protection Association
Provided by IHS under license with NFPA
No reproduction or networking permitted without license from IHS
Not for Resale

with the approval and specific instructions of the foam proportioning system manufacturer.

A.13.3.4 Most foam concentrate manufacturers differentiate between the materials they recommend for foam proportioning system components that are designed to be flushed with water after operation and those components that are intended to be continuously wetted with foam concentrate.

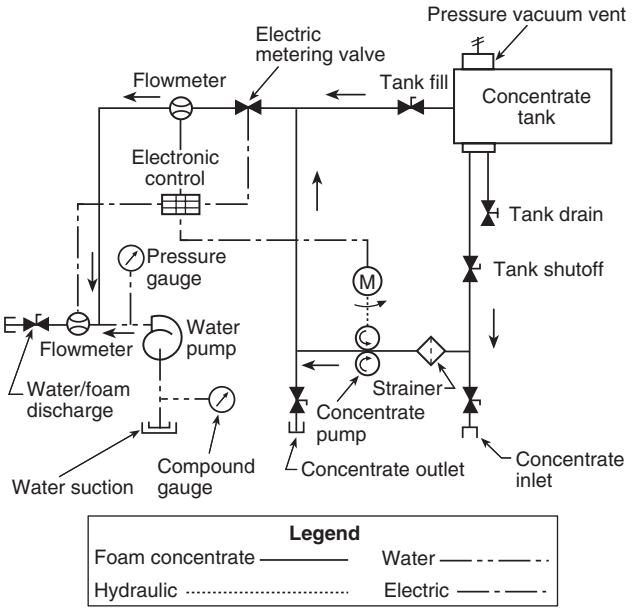

FIGURE A.13.2.6(b) Dual Meter Flow-Sensing Direct Injection Foam Proportioning System.

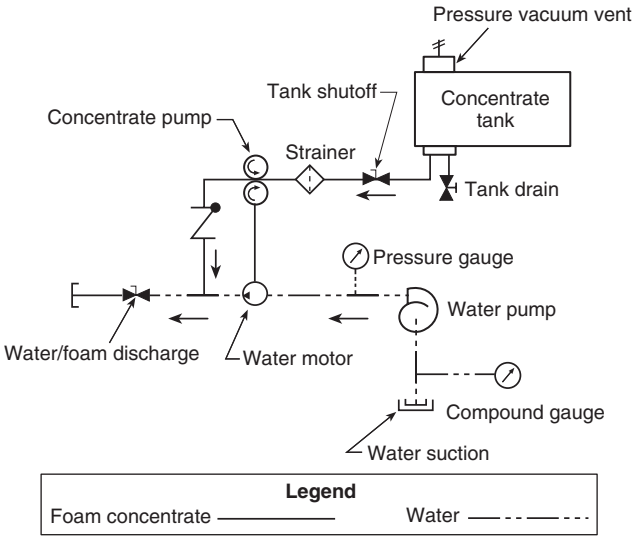

FIGURE A.13.2.7 Water Motor Foam Proportioning System.

A.13.4.1 It is desirable to have a visual indicator at the operator's position that shows whether the foam proportioning system is in the "operating" position or the "off" position. A visual means of indicating positive foam concentrate flow at the operator's position is also helpful.

A.13.6.3.2 Suitable means to attach the cover to the fill tower could include use of a threaded cap or a hinged cover with a mechanical latching device.

A.13.6.6 On fire apparatus where a single foam storage tank is used, provisions should be made to flush the tank and all foam concentrate plumbing to avoid contamination of dissimilar foam concentrates when switching types or brands.

A.13.6.8 The foam concentrate tank(s) can be an integral part of the water tank.

A.13.6.10.2 Different types and brands of concentrates can be incompatible with each other and should not be mixed in storage. Concentrate viscosity varies with different types of products and temperatures.

A.13.7 The foam concentrate pump is a critical component of both balanced pressure and direct injection foam proportioning systems. Positive displacement pumps are recommended for several reasons. Positive displacement pumps are relatively slow in speed compared to centrifugal pumps, which is advantageous with viscous foam concentrates that are difficult to shear. Centrifugal pumps can become air bound when trying to pump viscous foam concentrates, which results in a complete shutdown of the system. The self-priming feature of positive displacement pumps allows them to draw foam concentrate from drums or any external source without priming the pump.

A.13.7.2 Corrosion-resistant materials are materials such as brass, copper, Monel, stainless steel, or equivalent materials.

A.13.9.3(5) It is necessary for the operator to familiarize himself or herself with the specific types of foam concentrates the foam proportioning system manufacturer has designed the system to operate with and proportion accurately. The foam proportioning system could require modification, or recalibration, if a foam concentrate is introduced into the system that was not intended for use in the system by the manufacturer.

A.13.10.1 There are four methods for testing a foam proportioning system for calibration accuracy. They are:

(1) Substituting water for foam concentrate
(2) Measuring foam concentrate pump output directly
(3) Determining foam percentage by use of a refractometer
(4) Determining foam percentage by use of a conductivity meter

Test Method 1: Substituting Water for Foam Concentrate. The foam proportioning system is operated at the water flow rates at which the system is to be tested. Water is used as a substitute for foam concentrate. The substitute water for the foam concentrate is drawn from a calibrated tank instead of foam concentrate from the foam concentrate tank. The volume of water drawn from the calibrated tank divided by the volume of water pumped over the same time period multiplied by 100 represents the percentage of foam that the foam proportioning system is producing.

Test Method 2: Measuring Foam Concentrate Pump Output Directly. With some direct-injection systems, it is possible to directly measure the foam concentrate pump output. With the foam proportioning system operating at a given water

Copyright National Fire Protection Association
Provided by IHS under license with NFPA
No reproduction or networking permitted without license from IHS
Not for Resale

flow rate, and either foam concentrate or water used as a substitute for foam concentrate, the output of the foam concentrate pump is measured by diverting that output into a calibrated container for direct measurement over a measured period of time. An alternative is to measure the foam concentrate flow or water substitute with a calibrated meter.

Test Method 3: Determining Foam Percentage by Use of a Refractometer. A refractometer is used to measure the refractive index of a foam solution sample.

First, a base calibration curve is prepared using the same water and foam concentrate that will be used with the system to be tested. Three known foam solution samples are needed and should include the following:

(1) The nominal intended percentage
(2) The nominal intended percentage plus 1 percent
(3) The nominal intended percentage minus 1 percent

If the nominal intended percentage is 1 percent or less, the three samples should be as follows:

(1) The nominal intended percentage
(2) The nominal intended percentage plus 0.3 percent
(3) The nominal intended percentage minus 0.3 percent

The required amount of water is placed in a 100 mL or larger graduated cylinder, leaving space for the foam concentrate. A 10 mL pipette or 10 cc syringe is used to carefully add the required amount of foam concentrate to the water. Each measured foam solution is then poured from the graduated cylinder into a 100 mL or larger plastic bottle, and the bottle is marked to indicating the percentage solution it contains. The bottle is capped and thoroughly shaken to mix the foam solution.

An alternative method for making the three foam solution samples is to use a very accurate scale. The density of the foam concentrate needs to be known and can be found on the product data sheet or the Material Safety Data Sheet (MSDS) for the foam concentrate. For example, to make a 100 mL sample of a 3 percent foam solution using a foam concentrate with a density of 1.04, 97 g of water is measured into a beaker and 3.12 g of foam concentrate is added to the beaker ($1.04 \cdot 3$ g = 3.12 g).

After the foam solution samples are thoroughly mixed, a refractive index reading is taken of each foam solution sample. This is done by placing a few drops of the solution on the refractometer prism, closing the cover plate, and observing the scale reading at the dark field intersection. Because the refractometer is temperature compensated, it could take 10 seconds to 20 seconds for the sample to be read properly. It is important to take all refractometer readings at ambient temperatures of 50°F (10°C) or above.

Using standard graph paper, the refractive index readings are plotted on one axis and the percentage of concentration on the other. This plotted curve serves as the known baseline for the test series. The solution samples should be set aside in the event the measurements need to be checked.

Foam solution samples are then collected from the proportioning system, making certain that the samples are taken at an adequate distance downstream from the foam proportioning system being tested to allow for complete mixing of the water and the foam concentrate. Refractive index readings of the samples are taken and compared to the plotted curve to determine the percentage of foam.

This method might not be accurate for aqueous film-forming foam (AFFF), alcohol-resistant foam, or certain other types of foam that typically exhibit very low refractive index readings. Also, the refractometer method should not be used when testing foam percentages of 1 percent or lower because the accuracy for determining the percentage of foam concentrate in a solution when using a refractometer is ±0.1 percent, at best. For this reason, Test Method 4, the conductivity method, might be preferable where AFFF, alcohol-resistant foam, or 1 percent or less foam (Class A foam) is to be tested.

Test Method 4: Determining Foam Percentage by Use of a Conductivity Meter. The conductivity test method is based on changes in electrical conductivity as foam concentrate is added to water. Conductivity is a very accurate method, provided there are substantial changes in conductivity as foam concentrate is added to the water in relatively low percentages. Because saltwater and brackish water are very conductive, this method might not be suitable where these waters are used because of the small conductivity changes as foam concentrate is added. If saltwater or brackish water is used, it is necessary to make foam solutions in advance to determine if adequate changes in conductivity can be detected. This method cannot be used if the water has more total solids than the foam concentrate.

The following three variations of this test method can be used to determine the foam percentage by the conductivity method:

(1) *Direct Reading Conductivity Method.* A sample of the water to be used in the test is put in a 100 mL or larger container. The conductivity meter head is immersed in the water sample, and the meter display is set at zero. If the direct reading foam solution conductivity meter is mounted in a discharge line, the meter should be set at zero with plain water flowing.

If the conductivity meter manufacturer does not indicate that the percentage of foam solution can be read directly for the foam concentrate being used, a calibration curve needs to be developed. The calibration curve might show that the direct meter readings are correct for the foam concentrate being used, or it might indicate that the calibration curve needs to be used when that foam concentrate is used in the test.

The foam proportioning system is operated, and a sample of the foam solution produced by the system is collected using a 100 mL or larger container. The conductivity meter head is immersed in the foam solution sample, and the percentage of the foam solution is read on the meter display. If the conductivity meter is mounted in a discharge line, the percentage of the foam solution is read on the meter display while foam solution is being discharged.

(2) *Conductivity Comparison Method.* A sample of the water to be used in the test is put in a 100 mL or larger container. Using a conductivity meter reading in microsiemens per centimeter (mscm), the conductivity valve of the water sample is determined. The foam proportioning system is operated, and a sample of the foam solution produced by the system is collected in a 100 mL or larger container. Using the conductivity meter, the conductivity value of the foam solution sample is determined.

The conductivity value of the water sample is subtracted from the conductivity value of the foam solution sample, and the result is divided by 500 to obtain the percentage of foam concentrate in the solution.

$$\text{percentage of foam} = \frac{\left(\begin{matrix}\text{conductivity of}\\ \text{foam solution}\end{matrix}\right) - \left(\begin{matrix}\text{conductivity}\\ \text{of water}\end{matrix}\right)}{500}$$

Note that the divisor is 500 only if the conductivity meter units are microsiemens per centimeter. Other units of conductivity can be used, but the value of the divisor (500) will need to be adjusted.

Copyright National Fire Protection Association
Provided by IHS under license with NFPA
No reproduction or networking permitted without license from IHS
Not for Resale

(3) *Conductivity Calibration Curve Method.* A base calibration curve is prepared using the water and foam concentrate from the system to be tested. Three known foam solution samples are made using the procedure in Test Method 3. After the foam solution samples are thoroughly mixed, the conductivity of each solution is measured using a conductivity meter. Care should be taken to ensure that the proper procedures are used for taking readings and that the meter is switched to the correct conductivity range. Most synthetic-based foams used with freshwater result in foam solution conductivity readings of less than 2000 mscm. Protein-based foams used with freshwater generally produce conductivity readings in excess of 2000 mscm. Because of the temperature-compensation feature of the conductivity meter, it could take a short time to obtain a consistent reading.

Once the solution samples have been measured and recorded, the bottles should be set aside as control sample references. The conductivity readings then should be plotted on standard graph paper. It is more convenient to place the foam solution percentage on the horizontal axis and the conductivity readings on the vertical axis.

A straight line should be drawn that approximates the connection of all three points. While it might not be possible to connect all three points with a straight line, they should be very close. If not, the conductivity measurements should be repeated, and, if necessary, new control sample solutions should be prepared and used until all three points plot in a nearly straight line. This plot serves as the known base (calibration) curve to be used for the test series.

Once a base curve has been plotted, foam solution samples are collected from the proportioning system. The conductivity of the test samples is measured, and the percentage of foam solution is determined from the base curve. Foam solution samples that have been allowed to drain from expanded foam should not be used, because they can produce misleading conductivity readings.

A.13.10.1.2 Depending on the foam proportioner technology, the manufacturer could require the system to be calibrated at the low end, high end, or somewhere midrange, to ensure the system meets the accuracy requirements in the standard. For example, if the system runs richer as percentages increase, the manufacturer could anchor the low percentage during calibration. Therefore the manufacturer needs to have the flexibility to pick this point, knowing how his technology reacts over the full operating range.

A.13.11.1(2) The user may wish to specify additional test points and viscosities to ensure that the user's full range of operational requirements are satisfied.

A.13.11.1(3) See A.13.10.1.

A.14.1 The following terms are not used in this document but are associated with compressed air foam systems and are included here to aid in understanding.

(1) *CAFS-Capable.* A compressed air foam system (CAFS)-capable fire apparatus is a fire apparatus equipped with the following:
   (a) Automatic regulating foam proportioning system capable of injecting foam concentrate into the discharge or pressure side of the pump
   (b) Air compressor with the capacity to supply the required SCFM and automatic air pressure controls
   (c) Controls to mix the air and foam solution

(2) *Chatter.* An unacceptable flow condition wherein air is not fully mixed with the foam solution.
(3) *High-Energy Foam Generator.* A foam generator that uses a large amount of external energy to aerate the foam.
(4) *Low-Energy Foam Generator.* A foam generator that uses energy of the foam stream to aerate the foam.
(5) *Mixing Chamber.* A device used to produce fine, uniform bubbles in a short distance as foam solution and air flow through it.
(6) *Scrubbing.* The process of agitating foam solution and air in a confined space such as a hose, pipe, or mixing chamber to produce tiny, uniform bubbles.
(7) *Slug Flow.* The discharge of distinct pockets of water and air due to the insufficient mixing of foam concentrate, water, and air in a compressed air foam system.
(8) *Surge.* The sudden decompression of a discharge line caused by the rapid opening of the discharge appliance.

A.14.2.4 It is recommended that compressed air not be injected into the discharge piping until the flow of foam solution has been established. The nozzle reaction at the end of a hose can be quite high if air and just water are flowing in the discharge line. The nozzle reaction could be a safety issue with an operator who is not expecting or not properly braced to withstand this reaction force. The reaction force is substantially reduced when a foam solution is flowing in the discharge hose. Also, a charged CAFS line should be opened slowly to lower the nozzle reaction force, which can be very high if opened rapidly.

A.14.2.5 Pressure in the form of compressed air can remain trapped in a CAFS as a result of deactivating the system. It is important for the operator to relieve any pressure in the foam proportioning system and connected hose lines before disconnecting hose lines or performing any operation that opens the system to atmosphere.

A.14.4 If the expansion ratio is to be tested, the following equipment and test procedures are recommended:

(1) Gram scale, 1500 g capacity accurate to 0.1 g.
(2) One 1000 mL container that can be struck at 1000 mL (A 1000 mL graduated cylinder cut off at 1000 mL works well.).

The empty container is placed on the scale, and the scale is set to zero. Using the container, a full sample of foam is collected and the foam is struck at the 1000 mL level. The container is placed on the scale, and the mass is read in grams.

$$\text{Expansion} = \frac{1000}{\text{Foam mass in grams}}$$

The foam mass in grams assumes that 1 g of foam solution occupies 1 mL of volume.

A.14.5 Any components of the piping system exposed to pressurized air from the CAFS should be designed for a burst gauge pressure of at least 500 psi (3400 kPa).

A.14.7.6 Some systems provide automatic regulation of the water flow; however, instrumentation is still useful to the operator. Even automatic systems have adjustments and performance limits that warrant instrumentation. Where the system design does not allow for such automatic regulation, or where the operator has the ability to control water flow or airflow, air and water flowmeters are necessary for the operator to monitor the operational performance of the CAFS where the nozzle person cannot be seen. Where pumping long hose lays or pumping to great heights, the operator needs to know what is flowing in order to be certain the proper product is being delivered.

Copyright National Fire Protection Association
Provided by IHS under license with NFPA
No reproduction or networking permitted without license from IHS
Not for Resale

A.14.9 If the tests of some components of the apparatus are being certified by an independent third-party certification organization, the purchaser might wish to specify that these tests also be certified by the independent third-party certification organization.

A.14.9.1.3.3 Care should be taken to avoid injuries to personnel from the discharging airstream. Only those persons actually conducting the tests should be in the test area, and they should wear protection for their ears, eyes, and face from noise and dust during the airflow test.

A.15.1.1 Winches are classified by manufacturers for different applications and uses. The purchaser might wish to specify that winches meet requirements of SAE J706, *Rating of Winches*. Winches installed on fire apparatus are not designed or suited for lifting or lowering personnel in rescue applications. Winches rated at under 20,000 lbf (89 kN) on fire apparatus are not designed for removal of apparatus from "buried" off-road conditions. A heavy-duty wrecker should be used for towing and lifting of fire apparatus.

A.15.2 Most electric (12 V or 24 V dc) winches used for fire apparatus applications are rated at between 5000 lbf (22.2 kN) and 12,000 lbf (53.4 kN) line pull. Smaller winches of the removable type might be specified by the purchaser. Hydraulically driven winches are typically rated for 6000 lbf to 30,000 lbf (26.7 kN to 133.5 kN) line pull.

A.15.4.1.1 There is virtually no control over the speed of a single-speed electric winch. The winch runs at the speed the load dictates — faster with light loads and slower with heavy loads.

Two-speed electric winches provide only for preselection of the winch gear ratio — that is, one gear ratio for pulling heavy loads, a second for light loads — and are not designed for shifting under load to improve line speed.

A.15.5 A fast-idle switch should also be provided. The switch should be interlocked with the neutral position of the transmission to prevent accidental movement of the apparatus.

A.15.5.5.1 Completion of the engagement might require that the chassis transmission be shifted into the proper gear (split shaft PTOs only).

A.16.3 Skid plates can be used to protect the transfer case, gear box, pump, engine oil pan, radiator, auxiliary coolers, exhaust components, brake lines or components, fuel tank, steering gear, and axle differential.

Annex B Specifying and Procuring Wildland Fire Apparatus

This annex is not a part of the requirements of this NFPA document but is included for informational purposes only.

B.1 General. The purchase of new fire apparatus involves a major investment and should be treated as such. Fire apparatus are complex mechanical equipment that should not be purchased in a haphazard manner. A purchase should be made only after a detailed study of the fire department's apparatus needs, taking into consideration other equipment the department owns or plans to buy.

The local fire chief and fire department staff know the conditions under which the apparatus will be used. However, competent advice should also be obtained from knowledgeable and informed sources such as other experienced fire service personnel, wildland fire agencies, trade journals, training instructors, maintenance personnel, and fire equipment and component manufacturers. The fire insurance rating authority should also be consulted.

The study should look not only at current operations and risks to be protected but also at how these might change over the life of the fire apparatus.

B.2 Writing the Specifications. This standard provides the minimum technical requirements that new wildland fire apparatus are expected to meet. It is recognized that many purchasers will want additional features of operation over and above these minimum requirements. The requirements in this standard, together with the annex material, should be studied carefully. Details, such as anywhere that the apparatus being specified needs to exceed the minimum requirements or where a specific arrangement is desired, should be carefully defined in the specifications for the apparatus. These specifications might include special performance requirements, defining the number of seats and the seating arrangement for fire fighters riding on the apparatus, or providing space for extra hose or equipment the apparatus will be required to carry. Completion of the form shown in Figure B.2 should assist the purchaser in developing their specifications and provide the information required in the various sections of this document. The purchaser should fill in only sections where there are specific requirements over and above the standard. Care must be taken not to specify incompatible requirements, such as a 3000 gal (11,400 L) water tank, which weighs approximately 30,000 lb (13,600 kg), and a 10,000 lb (4500 kg) GVWR chassis. When more restrictive details are specified, fewer manufacturers will be able to bid, and the cost of the apparatus may be higher.

B.2.1 The first consideration in the design of a fire apparatus is a definition of the mission of the apparatus. The purchaser should define the basic specifications as follows:

(1) The type of apparatus to be purchased
(2) Types of responses
(3) The response environment (level terrain, hilly terrain, on-road, off-road, responses of hundreds of miles, etc.)
(4) Crew size (number of seats)
(5) Size of pump
(6) Size of tank(s)
(7) Hose load, if any
(8) Commercial or custom chassis
(9) Chassis configuration (conventional, cab over, cab forward, rear engine)
(10) Size or weight limitations due to firehouse, roads, bridges, terrain, neighborhoods
(11) Budget considerations
(12) Expected service life (years) and duty cycle (runs per day or month)

B.2.2 The second consideration in the design of a fire apparatus is the fixed equipment components. These major "support function" components can represent the most concentrated and heaviest load elements of the vehicle. It is vital that these elements be laid out early in the initial designs and be situated on the vehicle to provide for the following:

(1) Good load distribution
(2) Balance (both front-to-rear and right-to-left)
(3) Low center of gravity

Fixed components can be located in exterior compartments or in the interior of the vehicle to be functional and organized in a layout to be user-friendly in emergency applications. The following are examples of fixed equipment:

(1) Electrical generators
(2) Water tanks, fire pumps, and other fire-fighting equipment
(3) Reels of all types

Copyright National Fire Protection Association
Provided by IHS under license with NFPA
No reproduction or networking permitted without license from IHS
Not for Resale

APPARATUS PURCHASING SPECIFICATION FORM

PROCUREMENT ISSUES

* Date of bid opening: _____

* Purchaser's name and address: _____

_____

_____

* Contact name and telephone number: _____

_____

_____

* Sealed bid envelope information, address, and identification marking: _____

_____

_____

* The bidder is to honor the bid price for _____ days.

* Are interim inspection trip(s) to the assembly plant to be provided? ❑ Yes ❑ No

If yes, indicate number of trips _____ number of participants _____

Who will pay expenses? _____

How many service and operation manuals are to be provided? _____

* Where is the delivery of the apparatus to occur? _____

_____

* Where and when is the acceptance to occur? _____

_____

_____

* The operation and service instruction and demonstration is to be conducted at _____

_____

for _____ persons for _____ days.

Is a special payment plan or schedule required? ❑ Yes ❑ No

If yes, what are the requirements? _____

_____

_____

Is an approval drawing required? ❑ Yes ❑ No

Is a bid bond required? ❑ Yes ❑ No

If yes, what percent of the bid price? _____

Is a performance bond required? ❑ Yes ❑ No

If yes, what percent of the bid price? _____

Is an extended warranty on specific components required? ❑ Yes ❑ No

If yes, indicate which components are to be covered and the length of the warranty: _____

_____

_____

Is a warranty bond required? ❑ Yes ❑ No

If yes, in what amount? _____

*Generally required for manufacturer to bid on and build apparatus.

© 2006 National Fire Protection Association NFPA 1906 (p. 1 of 14)

FIGURE B.2 Specification Form for Purchasing Apparatus.

Copyright National Fire Protection Association
Provided by IHS under license with NFPA
No reproduction or networking permitted without license from IHS
Not for Resale

APPARATUS PURCHASING SPECIFICATION FORM *(continued)*

GENERAL REQUIREMENTS

Special design features required on this apparatus: _____

_____

_____

_____

_____

What are the maximum allowable dimensions of the apparatus?

Overall height in inches (millimeters): _____ (measured at the highest projection)

Overall length in inches (millimeters): _____ (measured at the front and rearmost projections)

Wheel base in inches (millimeters): _____ (measured from the center of the front axle to the center of the rear axle)

Width in inches (millimeters): _____ (measured at the outside of the mirrors)

Gross vehicle weight in pounds (kilograms): _____

Maximum weight on the front axle in pounds (kilograms): _____

Maximum weight on the rear axle in pounds (kilograms): _____

What is the maximum wall-to-wall turning radius allowable? _____ ft (meters)

* Maximum elevation at which the apparatus will operate if over 2000 ft (600 m): _____

Maximum grade for stationary operation if over 10 percent: _____

Maximum grade that apparatus must be able to maneuver on if more than across a 20 percent grade and up and down a 25 percent grade: _____

Apparatus road performance if it is to exceed the minimum specified in this standard: _____

_____

_____

_____

_____

* Maximum road speed required: _____

* Minimum ambient air temperature in which the apparatus is to operate: _____

* Maximum ambient air temperature in which the apparatus is to operate: _____

* Maximum number of persons to ride on the apparatus: _____

_____

* **Hose Thread Size Information**

(TPI × OD or size and type) (i.e., 2½ in. NH or 1 in. NPSH)	
¾ in. =	1 in. =
1½ in. =	2 in. =
2½ in. =	3 in. =
3½ in. =	4 in. =
4½ in. =	5 in. =
6 in. =	Hydrant =

© 2006 National Fire Protection Association

FIGURE B.2 *Continued*

Copyright National Fire Protection Association
Provided by IHS under license with NFPA
No reproduction or networking permitted without license from IHS
Not for Resale

APPARATUS PURCHASING SPECIFICATION FORM *(continued)*

Testing and Acceptance

Is independent third-party certification of test results required for the pump system? ❑ Yes ❑ No

Is anyone representing the purchaser to witness the manufacturer's predelivery tests? ❑ Yes ❑ No

If yes, who? _____

_____

Where are the road tests to be conducted? _____

_____

_____

* What tests will the contractor be required to perform on delivery? _____

_____

_____

CHASSIS AND VEHICLE COMPONENTS

Desired chassis make and model or style: _____

_____

Desired location of the engine: _____

Type of propulsion engine: _____

Is an electric fuel pump or repriming pump required? ❑ Yes ❑ No

Special lubrication system requirements: _____

_____

_____

Special cooling system requirements: _____

_____

_____

Is an automatic throttle control device required? ❑ Yes ❑ No

Is a manual emergency engine shutdown required? ❑ Yes ❑ No

Type of fuel filters required: _____

_____

Type of air filters required: _____

_____

Enhanced performance ember separator requirements: _____

_____

Exiting location of the exhaust system: _____

_____

Type of brake system required: _____

_____

Is an auxiliary brake system required? ❑ Yes ❑ No

If yes, type and control: _____

_____

_____

© 2006 National Fire Protection Association

FIGURE B.2 ***Continued***

--`,,```,,,,````-`-`,,`,,`,`,,`---
Copyright National Fire Protection Association
Provided by IHS under license with NFPA
No reproduction or networking permitted without license from IHS
Not for Resale

APPARATUS PURCHASING SPECIFICATION FORM *(continued)*

Style and type of tires required: _____

_____

_____

Indicate whether cast spoke, hub piloted, stud piloted, steel disc, or aluminum wheels are required: _____

_____

_____

Are rear fender liners required? ❑ Yes ❑ No

Are automatic tire chains required? ❑ Yes ❑ No

Minimum axle housing and ground clearance required: _____

_____

Increased underbody clearance required greater than the standard's minimum: _____

_____

Angle of approach required if greater than 20 degrees: _____

Angle of departure required if greater than 20 degrees: _____

Ramp breakover angle required: _____

Specify the steering system cramp angle if it exceeds the standard's minimum: _____

_____

Is a drive axle traction control or no-spin differential required? ❑ Yes ❑ No

If yes, what design or style? _____

_____

Is rear wheel steering required? ❑ Yes ❑ No

If yes, what design or style? _____

_____

Is a special suspension system required? ❑ Yes ❑ No

If yes, what design or style? _____

_____

Is an automatic or manual transmission required? _____

Fuel tank capacity required: _____ gal (L)

Must tow hooks be accessible without opening compartment doors? ❑ Yes ❑ No

Is a rear license plate bracket and light required? ❑ Yes ❑ No

Special cab trim features: _____

_____

_____

LOW-VOLTAGE ELECTRICAL SYSTEMS AND WARNING DEVICES

* Indicate whether a battery charger, conditioner, or polarized receptacle is to be provided: _____

_____

_____

If a built-in battery charger or conditioner is provided, indicate the required charging rate: _____

_____

© 2006 National Fire Protection Association

FIGURE B.2 *Continued*

Copyright National Fire Protection Association
Provided by IHS under license with NFPA
No reproduction or networking permitted without license from IHS Not for Resale

APPARATUS PURCHASING SPECIFICATION FORM *(continued)*

Specify the location of the receptacle for the battery charger or conditioner: _____

_____

Is a second "master body disconnect on" indicator on the outside of the vehicle required? ❑ Yes ❑ No

Where? _____

Specify any electrical loads beyond those defined in the standard that are to be part of the minimum continuous electrical load: _____

_____

If a load management system is required, specify the sequence of control (shutdown): _____

_____

_____

Is certification of the testing of the low-voltage electrical system by an independent third-party certification organization required? ❑ Yes ❑ No

Is the vehicle to be equipped to call for or block right of way on a public highway? ❑ Yes ❑ No

If yes, specify warning light and siren information:

Warning Light Information

Location	Make and Model	Color
Upper forward-facing		
Upper-level side-facing near front		
Upper-level side-facing near midship		
Upper-level side-facing near rear		
Upper-level rear-facing		
Lower-level forward-facing		
Lower-level side-facing near front		
Lower-level side-facing near midship		
Lower-level side-facing near rear		
Lower-level rear-facing		

Make, model, location, and controls of the siren: _____

_____

_____

Are air horns required? ❑ Yes ❑ No

If yes, make preferred, type of control, and their location: _____

_____

Special emergency lighting or warning features or equipment required: _____

_____

Are cab hand lights or mounted adjustable spotlights required? ❑ Yes ❑ No

Additional work lighting required: _____

_____

© 2006 National Fire Protection Association

FIGURE B.2 ***Continued***

--`,,```,,,,````-`-`,,`,,`,`,,`---
Copyright National Fire Protection Association
Provided by IHS under license with NFPA
No reproduction or networking permitted without license from IHS
Not for Resale

APPARATUS PURCHASING SPECIFICATION FORM *(continued)*

Specify if additional driving or crew compartment lighting is required: _____

Are provisions needed for rechargeable equipment? ❑ Yes ❑ No

If yes, make and model of equipment: _____

Is a backup camera system required? ❑ Yes ❑ No

If yes, make and model: _____

DRIVING AND CREW AREAS

Special seating requirements or arrangements for the driver: _____

Special seating requirements or arrangements for the officer: _____

Special seating requirements or arrangements for the crew: _____

Is an intercom system required? ❑ Yes ❑ No

Make, model, or type: _____

Locations: _____

Radio interface: _____

Special requirements: _____

Special requirements for carrying tools or equipment within the driving or crew compartment: _____

Special requirements for carrying EMS equipment within the driving or crew compartment: _____

Special step or handrail arrangements required: _____

Is a tilt or telescoping steering column required? ❑ Yes ❑ No

If yes, what design or style: _____

Extra driving compartment instrument panel features required: _____

Type and style of driving compartment mirrors: _____

© 2006 National Fire Protection Association

FIGURE B.2 ***Continued***

Copyright National Fire Protection Association
Provided by IHS under license with NFPA
No reproduction or networking permitted without license from IHS Not for Resale

APPARATUS PURCHASING SPECIFICATION FORM *(continued)*

BODY, COMPARTMENTS, AND EQUIPMENT MOUNTING

Body material: _____

_____

Compartment capacity required: _____ ft^3 (m^3)

Special compartment features and finish required: _____

_____

Compartment floor material or covering required: _____

_____

Type and style of compartment doors required: _____

_____

Style of door latches, locks, or stays required: _____

_____

Type of compartment lighting required: _____

_____

Radio equipment to be used: _____

Is the manufacturer to provide the radio? ❑ Yes ❑ No

Is the manufacturer to install the radio? ❑ Yes ❑ No

Make and model: _____

Mounting location for radio: _____

Mounting location for control(s) and speaker(s): _____

_____

Provisions required for computer equipment or electronics: _____

_____

_____

Type of body tread plate material required: _____

_____

Type of step and platform material required: _____

_____

* Color of apparatus: _____

Paint number and manufacturer, if known: _____

Striping, decoration, and lettering required: _____

_____

_____

Areas not to be painted: _____

_____

Miscellaneous body trim: _____

_____

Is rustproof treatment required? ❑ Yes ❑ No

If yes, locations to be treated: _____

_____

© 2006 National Fire Protection Association

FIGURE B.2 ***Continued***

Copyright National Fire Protection Association
Provided by IHS under license with NFPA
No reproduction or networking permitted without license from IHS
Not for Resale

APPARATUS PURCHASING SPECIFICATION FORM *(continued)*

* **Hose to Be Carried for Preconnected Lines**

Length	Size	Location	Bed or Reel

* **Hose to Be Carried in Hose Bed or on Reels**

Length	Size	Location	Bed or Reel

Is a hose bed cover(s) required? ❑ Yes ❑ No

If yes, specify type: _____

_____

Is the fire-fighting system to be a slip-on unit? ❑ Yes ❑ No

If yes, lifting arrangement required: _____

_____

Anchoring system required: _____

_____

WATER PUMP

* Pump-rated capacity: _____ gpm (L/min) at _____ psi (kPa)

* Number of pump stages required: _____

Pump type: _____

Pump location: _____

Is the pump to be driven by the chassis propulsion engine? ❑ Yes ❑ No

If no, how is the pump to be driven? _____

_____

Pump testing authority: _____

Pump-and-roll performance required:

Flow _____ gpm (L/min) at _____ psi (kPa)

Vehicle speed _____ mph (km/hr)

Type of priming system: _____

_____

_____

© 2006 National Fire Protection Association

FIGURE B.2 ***Continued***

Copyright National Fire Protection Association
Provided by IHS under license with NFPA
No reproduction or networking permitted without license from IHS
Not for Resale

APPARATUS PURCHASING SPECIFICATION FORM *(continued)*

Special pump performance requirements:

If altitude over 2000 ft (600 m), specify altitude: _____

If lift over 10 ft (3 m), specify lift: _____

If through more than 20 ft (6 m) of suction hose, specify length: _____

Do local water conditions require special materials for pump construction and piping? _____

_____

Location of pump operator's position: _____

Pump panel and gauge panel material, if required: _____

Type of intake and discharge valve controls desired: _____

_____

Size of the master gauges: _____

_____

Are individual line pressure gauges required? ❑ Yes ❑ No

If yes, are there any special requirements? _____

_____

Are individual line flow meters required? ❑ Yes ❑ No

If yes, are there any special requirements? _____

_____

Are any special gauges, instruments, or other features required at the pump operator's position? _____

_____

Are special pump and piping features required to deal with extremely low temperatures? _____

_____

Is an intake relief system required? ❑ Yes ❑ No

Special requirements: _____

_____

Is a pump pressure governor or a relief valve to be supplied? _____

* **Pump intake connections**

Indicate the following for each pump intake:

Size	Type of Connection	Location	Valved Y/N

Are specific flow rates required for auxiliary intakes? ❑ Yes ❑ No

If yes, specify details: _____

_____

Is certification of intake flow rates required? ❑ Yes ❑ No

© 2006 National Fire Protection Association

FIGURE B.2 *Continued*

Copyright National Fire Protection Association
Provided by IHS under license with NFPA
No reproduction or networking permitted without license from IHS
Not for Resale

APPARATUS PURCHASING SPECIFICATION FORM *(continued)*

Are special adapters required on the pump intakes? ❑ Yes ❑ No

If yes indicate type: _____

* Will a valve, siamese, or adapter be carried on any intakes? ❑ Yes ❑ No

If yes, specify where, make, and model: _____

_____

* **Pump Discharge Outlets Without Preconnected Hose Lines**

Size	Type of Connection	Location	Flow Requirement	Valved Y/N

* **Pump Discharge Outlets for Preconnected Hose Lines**

Size	Type of Connection	Location	Flow Requirement	Valved Y/N

Is a deck gun required? ❑ Yes ❑ No

Type: _____

Mounting location: _____

Piping size and arrangement: _____

Is pump panel color or number coding required? ❑ Yes ❑ No

Specify details: _____

_____

Is a booster reel required? ❑ Yes ❑ No

How many reels? _____

Location: _____

Hose size and length: _____

Reel rewind type: _____

Piping to reel: _____

© 2006 National Fire Protection Association

FIGURE B.2 *Continued*

Copyright National Fire Protection Association
Provided by IHS under license with NFPA
No reproduction or networking permitted without license from IHS Not for Resale

APPARATUS PURCHASING SPECIFICATION FORM *(continued)*

PUMP ENGINE

Is a separate engine required to drive the pump? ❑ Yes ❑ No

Specify the desired location of the engine: _____

_____

_____

Type of engine: _____

Is the engine to draw its fuel from the vehicle's fuel system? ❑ Yes ❑ No

Specify the fuel tank capacity required: _____ gal

Is an electric fuel pump or repriming pump required? ❑ Yes ❑ No

Specify any special lubrication system requirements: _____

_____

Specify any special cooling system requirements: _____

_____

Type of coolant required: _____

Is an automatic throttle control device required? ❑ Yes ❑ No

Is a manual emergency engine shutdown required? ❑ Yes ❑ No

Type of fuel filters required: _____

Type of air filters required: _____

Specify the exiting location of the exhaust system: _____

_____

_____

WATER TANK

* Water tank capacity: _____

Tank construction material: _____

_____

Is an internal coating required? ❑ Yes ❑ No

Is a removable tank lid required? ❑ Yes ❑ No

Type of tank level indicator(s): _____

Location of additional tank level indicator(s): _____

_____

_____

Tank-to-pump flow rate required: _____

Pump-to-tank fill rate required: _____

Is a tank dump valve required? ❑ Yes ❑ No

Style of valve: _____

Size: _____

Performance required: _____

Location: _____

Type of connector: _____

© 2006 National Fire Protection Association

FIGURE B.2 ***Continued***

Copyright National Fire Protection Association
Provided by IHS under license with NFPA
No reproduction or networking permitted without license from IHS
Not for Resale

APPARATUS PURCHASING SPECIFICATION FORM *(continued)*

Is a direct tank fill required? ❑ Yes ❑ No

Style of valve: _____

Size: _____

Performance required: _____

Location: _____

Type of connector: _____

EQUIPMENT CARRIED ON APPARATUS

* **Suction Hose**

* Is suction hose required? ❑ Yes ❑ No

Soft or hard: _____

Size and length: _____

Connection type and size: _____

Mounting arrangement, bracket style, and location: _____

* **Breathing Apparatus**

Is self-contained breathing apparatus (SCBA) required? ❑ Yes ❑ No

Quantity	Make/Model	Mounting Location

* The SCBA is to be supplied by the ❑ contractor ❑ purchaser.

Special requirements for the SCBA or its mounting: _____

Miscellaneous Equipment

Is the allowance for 70 lb (32 kg) of personal gear for each seating position required? ❑ Yes ❑ No

Miscellaneous equipment allowance if it exceeds the standard's minimum weight: _____

Attach a list of equipment and tools to be supplied by the contractor with the apparatus, stating the item, quantity, where it is to be mounted or carried, the weight of each item, and its dimensions (L × W × D).

Attach a list of equipment and tools to be supplied by the fire department to be carried on the apparatus, stating the item, quantity, where it is to be mounted or carried, contractor's responsibility for mounting, the weight of each item, and its dimensions (L × W × D).

Attach a list of equipment and tools that might be carried on the apparatus in the future, stating the item, quantity, the desired mounting location or compartment where it is likely to be carried, the weight of each item, and its dimensions (L × W × D).

Attach a list of fixed and permanent components required on the apparatus, showing the item, quantity, weight of each, and dimensions (L × W × H), as well as the location where it is to be carried.

Indicate the reserve GAWR required on each axle (from 0 percent to 20 percent): _____

If additional compartment space is required, in addition to what is necessary to store the equipment on the attached four lists, indicate space requirements: _____

© 2006 National Fire Protection Association

FIGURE B.2 *Continued*

Copyright National Fire Protection Association
Provided by IHS under license with NFPA
No reproduction or networking permitted without license from IHS Not for Resale

APPARATUS PURCHASING SPECIFICATION FORM *(continued)*

CLASS A FOAM CONCENTRATE PROPORTIONING SYSTEM

* Is a Class A foam proportioning system required? ❑ Yes ❑ No

* Type of foam proportioning system required: _____

_____

* Type of foam(s) to be used: _____

_____

* Built-in foam concentrate storage capacity: _____ gal (L)

* **Discharge Outlets to Be Used with Foam and Their Performance**

Discharge Outlet Location	Required Flow	Proportioning Rate	Hose Length	Hose Diameter

* Is an outside foam proportioning system inlet or pickup required? ❑ Yes ❑ No

If yes, type: _____

Is a foam tank refill system required? ❑ Yes ❑ No

If yes, performance requirements: _____

Indicate the size and location of water-only discharge outlets: _____

_____

COMPRESSED AIR FOAM SYSTEM

* Is a CAFS required? ❑ Yes ❑ No

* Total SCFM (SCMM) required: _____

Type of compressor and driver required: _____

_____

Total water pump capacity required: _____

_____

Type of system controls and interlocks required: _____

_____

* **Discharge Outlets to Be Used with the CAFS and Their Performance**

Discharge Outlet Location	Required Flow	Hose Length	Hose Diameter

© 2006 National Fire Protection Association

FIGURE B.2 *Continued*

Copyright National Fire Protection Association
Provided by IHS under license with NFPA
No reproduction or networking permitted without license from IHS
Not for Resale

APPARATUS PURCHASING SPECIFICATION FORM *(continued)*

Is automatic water and air pressure tracking required? ❑ Yes ❑ No

If yes, type of system: _____

_____

Is a water flow meter required [gpm (L/min)]? ❑ Yes ❑ No

Is an air flow meter required [SCFM (SCMM)]? ❑ Yes ❑ No

Type of wet/dry control required: _____

_____

WINCHES

* Is a winch required? ❑ Yes ❑ No

* What is the single line-pull rating required? _____

What is the wire rope length required? _____

Is the power source for the winch to be electric or hydraulic? _____

_____

Winch location: _____

_____

_____

Type of control required: _____

_____

Location of control: _____

_____

VEHICLE PROTECTION SYSTEM

Are brush rails required? ❑ Yes ❑ No

If yes, define specific requirements: _____

_____

_____

Is a grille guard required? ❑ Yes ❑ No

If yes, define specific requirements: _____

_____

_____

Are skid plates required? ❑ Yes ❑ No

If yes, define specific requirements: _____

_____

_____

What components are to be protected? _____

_____

_____

_____

© 2006 National Fire Protection Association

FIGURE B.2 ***Continued***

--`,,```,,,,````-`-`,,`,,`,`,,`---

Copyright National Fire Protection Association
Provided by IHS under license with NFPA
No reproduction or networking permitted without license from IHS Not for Resale

B.2.3 A major support function of any fire apparatus, no matter the type, is the portable equipment. That is why this document places so much emphasis on final GVWR and carrying capacity of the completed vehicle, which includes both fixed and portable equipment.

The listings of portable and fixed equipment are so variable, depending on the mission of the vehicle, that the fire department needs to measure and weigh its specific equipment.

The fire department should classify the equipment as follows:

(1) Existing — currently owned equipment that will be carried
(2) Proposed — new equipment that will be carried as the apparatus goes in service
(3) Future — equipment that might be carried in the future

In this way, a chassis with an adequate GVWR can be provided to ensure that the vehicle will not be overloaded in the future.

B.2.4 After determining the list of present, proposed, and future equipment, the fire department should analyze the "actual" cubic feet (cubic meters) of space necessary for the equipment. One source of information is comparing the equipment to be carried on the new apparatus with the equipment carried on existing apparatus, and thus the relative space requirements. The actual usable space in compartments also should be considered, in addition to the individual cubic feet (cubic meters) for each item of equipment to be carried. The following factors might increase the required cubic feet (cubic meters) of storage space required and thus the size of the vehicle body:

(1) Compartment door and box pan interference
(2) Mounting implications
(3) Compartment shelving
(4) Slide trays
(5) Components of the body such as compartment flanges, notches, and other interferences that affect removal of equipment from compartments
(6) Ventilation of generator, air compressor, pump engines, or other equipment

B.2.5 Where local operating conditions necessitate apparatus of unusual design, the purchaser needs to define carefully the special requirements in the specifications. Height, width, under-vehicle clearance, wheelbase, turning radius, length, and so forth might occasionally need special attention. For example, a community with many narrow, winding streets should have apparatus capable of readily negotiating switchbacks without delay.

B.2.6 This standard is designed to ensure sound equipment that is capable of good performance, with the inclusion of restrictive features only where needed to specify minimum requirements. The tests are an important feature, and the results should be carefully analyzed to ensure that the completed apparatus meets the specified performance.

Since the passage of Public Law 89-563, the National Traffic and Motor Vehicle Safety Act of 1966, the federal government has adopted certain motor vehicle safety standards applicable to all manufacturers of trucks, including fire apparatus. It is unlawful for a manufacturer to deliver a truck not in compliance with these federal standards. These federal safety standards are frequently changed, and their provisions make the incorporation of certain features and devices mandatory. Apparatus manufacturers face substantial penalties for infraction of these rules and, therefore, cannot build apparatus to specifications that would require them to perform unlawfully or to delete required items or to include any that are illegal.

Additional requirements are placed on both apparatus and engine manufacturers by the Clean Air Act, which is enforced by the Environmental Protection Agency (EPA). These EPA standards have resulted in major changes in the performance of many engines. Neither the engine manufacturer nor the apparatus manufacturer is permitted to modify an engine once it has been certified to EPA standards. Because of the EPA standards, it is often necessary to install larger engines than might have been previously used in order to obtain the same apparatus performance.

B.2.7 It is often useful, especially for complex apparatus, to plan an engineering meeting with the apparatus manufacturer's design team before construction begins. This allows for the optimum combination of the user's understanding of the requirements and the manufacturer's design experience in creating solutions.

Many apparatus purchasers find it favorable to provide for an interim inspection at the apparatus assembly plant. The advantages of such a provision include the opportunity to evaluate construction prior to final assembly and painting. The specifications should detail the particulars of such an inspection trip.

The chief of the fire department (or a designated representative) normally exercises the acceptance authority following satisfactory completion of tests and inspections for compliance with purchase specifications. The specifications should provide details of delivery expectations, including the desired instruction, the required acceptance tests, and who is responsible for the various costs associated with the delivery and acceptance.

B.2.8 Instruction and demonstrations for designated fire department personnel are essential to ensure that the purchaser and user are aware of, and instructed in, the proper operation, care, and maintenance of the apparatus acquired. The instruction and demonstrations should provide the initial instruction on the new apparatus. This instruction is typically delivered by a qualified representative of the contractor in the user's community. The specifications should clearly identify the arrangement for furnishing the instruction, including where it is to be provided, its duration, and what instructional aids, such as video tapes or manuals, are to be furnished.

B.2.9 The purchaser should also define in the specifications the warranty desired for the completed apparatus. The warranty is a written guarantee of the integrity of the apparatus or its components that defines the manufacturer's responsibility within a given time period. The warranty is sometimes extended for a second warranty period beyond the terms of the basic warranty for specific components, such as the engine, pump, frame, and water tank. If a secondary manufacturer is involved in modifying components that are warranted by the original manufacturer, the responsibility for warranty work should be clearly understood by the original manufacturer, the secondary manufacturer, the contractor, and the purchaser.

B.2.10 The purchaser might want a warranty bond to ensure that any warranty work will be performed, even if the apparatus manufacturer should go out of business. A warranty bond is

Copyright National Fire Protection Association
Provided by IHS under license with NFPA
No reproduction or networking permitted without license from IHS
Not for Resale

a third-party secured bond established by the manufacturer before delivery of a vehicle to guarantee workmanship, quality of material, or other stated performance of the vehicle components.

B.2.11 Finally, it is recommended that the fire chief, fire department staff, or committee assigned to develop the specifications consult with the purchaser's attorney, engineer, and other appropriate officials for assistance in developing the detailed specifications.

B.2.12 The form in Figure B.2 is a good way to document the specifications. All the items of information marked with an asterisk (*) generally are required in order for the manufacturer to bid on and build the apparatus. The other items are details about which the purchaser might want to specify special requirements. In many cases, the purchaser should specify additional details only if the purchaser is experienced in that area and has specific, unusual requirements. Consult with manufacturers or others with experience in apparatus architecture and specifications if necessary.

B.3 Obtaining and Studying Proposals. When the specifications are complete, they should be distributed to apparatus manufacturers and contractors with a request for bids or proposals to furnish the specified apparatus. The request should specify a date, time, and place for the formal opening of the bids. This date should allow at least 1 month for the engineering departments of apparatus manufacturers to study the specifications and estimate the cost of the apparatus. More time could be required if engineering drawings of the proposed apparatus are required.

B.3.1 The request also should state the time period during which the purchaser expects the bidder to honor the bid price and whether a bid bond is required. A bid bond guarantees that if a contract is offered to the bidder within the defined time period, the bidder will enter into the contract under the terms of the bid.

B.3.2 It is recommended that a pre-bid meeting be held between the purchaser of a piece of fire apparatus and the apparatus manufacturers or their agents prior to the official release of the apparatus specifications. Such a meeting is designed to allow for a detailed review of the draft specifications by all present at the meeting. Problems with the specifications, ideas on how to provide the purchaser with the desired apparatus in other ways, clarification of the purchaser's intent, and other questions can be resolved prior to the formal bid process. The meeting can often resolve misunderstandings or prevent problems before they occur.

B.3.3 With a performance specification, it is usually possible to obtain more favorable bids, since there is genuine competition and the specifications are not overly restrictive. The bid should be accompanied by a detailed description of the apparatus, a list of equipment to be furnished, and other construction and performance details, including, but not limited to, estimated weight, wheelbase, principal dimensions, transmission, and axle ratios. The purpose of the contractor's specifications is to define what the contractor intends to furnish and deliver to the purchaser.

B.3.4 Manufacturers' proposals might include amendments and exceptions. Frequently, these changes are offered to meet price requirements or because individual manufacturers prefer to build apparatus in a manner more convenient to them. If the intent of the original specification is not changed and the bid is favorable, the purchaser should consider accepting these amendments with the approval of the purchasing authority. On the other hand, extreme care should be taken to avoid allowing exceptions that devalue the apparatus and give one bidder an advantage.

B.3.5 The purchaser should study the proposals, look for deviations from the specifications, and obtain clarification where necessary. If the purchaser has specifically provided for alternatives when calling for bids, extra care should be exercised when evaluating the proposals because combinations of complicated bid information will need careful analysis. The financial arrangements, a delivery date, and the method of delivery should be stipulated and agreed to by the purchasing authority.

B.4 Awarding the Contract. With the award of a contract, it is important for the purchasing authority to understand exactly whom the contract is with and the nature of the relationship with the apparatus manufacturer. Some apparatus manufacturers work through a dealer network in which the dealer purchases the apparatus from a manufacturer, including taking title, and then resells the apparatus to the purchasing authority. Other manufacturers work through sales agents or representatives who solicit and negotiate a contract between a purchasing authority and a manufacturer but who never take title to the apparatus. This difference can affect where the responsibility lies for the proper fulfillment of the contract.

B.4.1 Some purchasing authorities require a performance bond as part of the contract. A performance bond is a bond executed in connection with a contract that guarantees that the contractor will fulfill all the undertakings, covenants, terms, conditions, and agreements contained in the contract. Should the contractor fail to meet the terms of the contract, the bonding company will be responsible for the difference in cost between the original contract price and the new price of the apparatus when it has to be supplied by another contractor.

B.4.2 Before signing a contract, the purchaser should make certain that the successful bidder has a complete and thorough understanding of the specifications. If there are any disagreements, these should be resolved in writing and made part of the contract. If any changes are agreed upon, they should be stated in writing and be signed by both parties. The contract should not be signed until the fire chief (or a designee) and the purchasing authority are satisfied.

B.5 Acceptance.

B.5.1 When the apparatus is ready for delivery and acceptance, the purchaser has a responsibility to check the completed apparatus carefully against the specifications, the contract, and the requirements of this document to ensure that all that was required is being delivered. This includes witnessing any required acceptance tests and verifying that the gross vehicle weight and the axle weight distribution are within the chassis and axle ratings. The delivery inspection form shown as Figure B.5.1(a) and the as-delivered weight analysis calculation worksheet shown as Figure B.5.1(b) can be useful in the inspection process. The weight distribution of in-service fire apparatus is critical to the safe operation of the apparatus. Figure B.5.1(b) and Table B.5.1 can help evaluate weight issues to confirm that the apparatus weight and distribution are within the chassis manufacturer's safe limits.

Copyright National Fire Protection Association
Provided by IHS under license with NFPA
No reproduction or networking permitted without license from IHS
Not for Resale

DELIVERY INSPECTION FORM

NFPA 1906 Paragraph	Topic	Description	Yes (Pass)	No (Fail)	N/A
4.6.1	Personnel protection	Guards or shields are provided around hot, moving or rotating parts.	❑	❑	❑
4.6.2	Personnel protection	Isolation or insulation is provided to protect personnel from electrical shock.	❑	❑	❑
4.7.1	Controls and gauges	All controls, switches, instructions, gauges, and instruments needed for operation are illuminated.	❑	❑	❑
4.13.8, 4.13.9	Brakes	Stopping distance measurement is provided.	❑	❑	❑
4.17.1	Documentation and manuals	Required manufacturer's data are provided.	❑	❑	❑
4.17.2	Documentation and manuals	Chassis operation and maintenance manual is provided.	❑	❑	❑
4.17.2	Documentation and manuals	Pump operation and maintenance manual is provided.	❑	❑	❑
4.17.2.3(4)	Documentation and manuals	Parts replacement information is provided.	❑	❑	❑
4.17.2.3(6)	Documentation and manuals	Wiring diagram is provided.	❑	❑	❑
4.17.2.3(7)	Documentation and manuals	Lubrication chart is provided.	❑	❑	❑
4.17.2.4	Documentation and manuals	Major component manufacturer's manuals are provided.	❑	❑	❑
5.1.4	Documentation and manuals	Federal National Highway Traffic Safety Administration, Department of Transportation 49 CFR, Part 567 weight certification label is provided.	❑	❑	❑
5.1.5.1	Information plate	Plate indicating the height, length, and GVWR of the vehicle is visible to the driver.	❑	❑	❑
5.3.1.1	Brakes	Anti-lock brake system is provided.	❑	❑	❑
5.3.1.7, 4.13.7	Brakes	Auxiliary braking system functions [required above 36,000 lb (16,000 kg) GVWR].	❑	❑	❑
5.3.2.2	Ramp breakover angle	Meets ramp breakover angle (if specified).	❑	❑	❑
5.3.2.2	Ground clearance	Meets ground clearance.	❑	❑	❑
5.3.2.3	Approach angle	Angle of approach is at least 20 degrees (vertical/horizontal greater than 0.3640).	❑	❑	❑
5.3.2.3	Departure angle	Angle of departure is at least 20 degrees (vertical/horizontal greater than 0.3640).	❑	❑	❑
5.3.4.2	Engine and fuel tank	Label is provided at the fuel fill to indicate type of fuel.	❑	❑	❑
6.8.12.1	Warning lights — responding	No yellow lights are in Zone A in the "calling for right-of-way" mode.	❑	❑	❑

© 2006 National Fire Protection Association

FIGURE B.5.1(a) Inspection Form for Delivery and Acceptance.

Copyright National Fire Protection Association
Provided by IHS under license with NFPA
No reproduction or networking permitted without license from IHS
Not for Resale

DELIVERY INSPECTION FORM ***(continued)***

NFPA 1906 Paragraph	Topic	Description	Yes (Pass)	No (Fail)	N/A
6.8.12.1	Warning lights — responding	No white lights are in Zone C in the "calling for right-of-way" mode.	❑	❑	❑
6.8.12.1	Warning lights — blocking	No white lights are in any zone in the "blocking right-of-way" mode.	❑	❑	❑
6.8.16	Warning lights	Compliance documentation provided.	❑	❑	❑
6.9.2.1	Audible warning	Sirens are certified to SAE J1849.	❑	❑	❑
6.9.3	Driving and crew compartment occupant protection	Audible warning devices and sirens are mounted low and in front of vehicle.	❑	❑	❑
7.1.3	Driving and crew compartment occupant protection	Seat belts are provided for each driving and crew compartment occupant.	❑	❑	❑
7.1.3.4	Warning signs	A "Seat Belts Required" sign is visible from every seating position.	❑	❑	❑
7.1.8	Driving and crew compartment occupant protection	Headroom at each seating position meets 7.1.8 requirement.	❑	❑	❑
7.1.10.1	Driving and crew compartment occupant protection	Each SCBA bracket is provided with a positive latching mechanical retaining device.	❑	❑	❑
7.1.11.1	Driving and crew compartment occupant protection	All equipment required to be used during a response is fastened.	❑	❑	❑
7.1.11.2	Driving and crew compartment occupant protection	Equipment not required to be used during a response is contained or fastened.	❑	❑	❑
8.3.2	Powered equipment rack	The rack has a device to lock it in the stowed position.	❑	❑	❑
8.3.4	Powered equipment rack	Operator can watch the rack from the controls while it is being deployed.	❑	❑	❑
8.3.6	Powered equipment rack	The rack is equipped with lights that flash when it is not stowed.	❑	❑	❑
8.3.7	Powered equipment rack	The rack has reflective devices to make it more visible when deployed.	❑	❑	❑
8.5.2	Pump compartment	Pump compartment access — no dimension is less than 18 in. (460 mm).	❑	❑	❑
8.6.1.1	Step height	First step is no more than 24 in. (610 mm), no more than 18 in. (460 mm) between any other step.	❑	❑	❑
8.6.1.2	Step size	All steps have minimum area of 35 in.^{2} (22,580 mm^2).	❑	❑	❑
8.6.1.2	Step size	All steps have at least 8 in. (200 mm) clearance between leading edge and any obstruction.	❑	❑	❑
8.6.1.2	Step size	All steps can have a 5 in. (125 mm) diameter disk placed on them without overlapping the edge.	❑	❑	❑

© 2006 National Fire Protection Association NFPA 1906 (p. 2 of 3)

FIGURE B.5.1(a) ***Continued***

--`,,```,,,,````-`-`,,`,,`,`,,`---

Copyright National Fire Protection Association
Provided by IHS under license with NFPA
No reproduction or networking permitted without license from IHS
Not for Resale

DELIVERY INSPECTION FORM *(continued)*

NFPA 1906 Paragraph	Topic	Description	Yes (Pass)	No (Fail)	N/A
8.6.1.3	Platform size	All platforms have at least 8 in. (200 mm) clearance between leading edge and any obstruction.	❑	❑	❑
8.6.1.4	Ladder rungs	All ladder rungs have at least 7 in. (180 mm) between them and the body or other obstruction.	❑	❑	❑
8.6.2	Step surfaces	Steps, platforms, and ladders are properly mounted.	❑	❑	❑
8.6.3.5	Step surfaces	Step surface slip-resistance documentation is provided.	❑	❑	❑
8.6.4	Warning signs	Signs warning that riding is prohibited are visible at rear platform.	❑	❑	❑
8.6.4	Warning signs	Signs warning that riding is prohibited are visible at cross walkway.	❑	❑	❑
8.7.1	Handrails	Handrails are provided at each entrance to a driving or crew compartment.	❑	❑	❑
8.7.1	Handrails	Handrails are provided at each position where steps or ladders for climbing are provided.	❑	❑	❑
8.7.3	Handrails	All handrails have a diameter between 1 in. and 1⅝ in. (25 mm and 42 mm).	❑	❑	❑
8.7.3	Handrails	All handrails have a minimum of 2 in. (50 mm) clearance to any other surface.	❑	❑	❑
8.7.4	Handrails	All handrails are designed to reduce the possibility of hand slippage.	❑	❑	❑
8.8.3	Reflective trim	Side of vehicle has a stripe at least 4 in. (100 mm) wide and 50 percent of vehicle length.	❑	❑	❑
8.8.3	Reflective trim	Front of vehicle has a stripe at least 4 in. (100 mm) wide and 25 percent of the front width.	❑	❑	❑
8.8.3	Reflective trim	Rear of vehicle has a stripe at least 4 in. (100 mm) wide and 50 percent of the rear width.	❑	❑	❑
9.11.5	Tank and piping capacity	Water tank-to-pump flow documentation is provided.	❑	❑	❑
9.11.6	Tank and piping capacity	Hydrostatic piping test documentation is provided.	❑	❑	❑
11.5.2	Tank and piping capacity	Tank capacity certification is provided.	❑	❑	❑
13.9.4	Documentation and manuals	Foam proportioning system operations and maintenance manuals are provided.	❑	❑	❑
13.11.2	Calibration and testing	Foam proportioning system calibration and testing documentation is provided.	❑	❑	❑
14.8.4	Documentation and manuals	CAFS operation and maintenance manuals are provided.	❑	❑	❑
14.9	Testing	CAFS testing documentation is provided.	❑	❑	❑

© 2006 National Fire Protection Association NFPA 1906 (p. 3 of 3)

FIGURE B.5.1(a) ***Continued***

Copyright National Fire Protection Association
Provided by IHS under license with NFPA
No reproduction or networking permitted without license from IHS
Not for Resale

AS-DELIVERED WEIGHT ANALYSIS CALCULATION WORKSHEET

Axle Rating Reserve Capacity Determination

	1	2	3	4	5	6	7	8	9
							Total Vehicle	**Front Axle**	**Rear Axle or Tandem**
a	Weight at delivery (with water)								
			Hose Length (m or ft)		**Weight per Unit Length (m or ft)**				**(100%)**
b	Hose allowance	Main hose bed		(×)		(=)			
c	Hose allowance	Main hose bed		(×)		(=)			
d	Hose allowance	Main hose bed		(×)		(=)			
								(50%)	**(50%)**
e	Hose allowance	Cross lay		(×)		(=)			
f	Hose allowance	Cross lay		(×)		(=)			
g	Hose allowance	Cross lay		(×)		(=)			
								(100%)	
h	Hose allowance	Front bumper		(×)		(=)			
i	Hose allowance	Suction hose		(×)		(=)			
j	Hose allowance	Other _____		(×)		(=)			
k	Hose allowance	Other _____		(×)		(=)			
			Seating Capacity (persons)		**Weight per Person (lb)**			**(100%)**	
l	Personnel allowance			(×)	200	(=)			
m	Personal gear allowance (if applicable)			(×)	70	(=)			
									(100%)
n	Miscellaneous equipment allowance *(See 5.1.2.8.)*								
o	Total expected in-service weight (sum of rows **a** through **n**)								
p	Axle weight ratings (from chassis manufacturer's data label)								
q	Expected reserve axle capacity								

© 2006 National Fire Protection Association NFPA 1906 (p. 1 of 1)

FIGURE B.5.1(b) Worksheet for As-Delivered Weight Analysis Calculation and Evaluation.

Copyright National Fire Protection Association
Provided by IHS under license with NFPA
No reproduction or networking permitted without license from IHS
Not for Resale

Table B.5.1 Typical Hose Weight Data

Nominal Hose Diameter		Weight per Unit Length	
in.	**mm**	**lb/ft**	**kg/m**
1	25	0.30	0.45
1½	38	0.38	0.57
1¾	44	0.43	0.64
2	51	0.50	0.75
2½	65	0.70	1.04
3	75	1.00	1.49
3½	90	1.20	1.79
4	100	0.85	1.27
4½	110	0.90	1.34
5	125	1.10	1.64
6	150	1.35	2.01

B.5.2 The purchaser also should arrange for any instruction and demonstration included as part of the delivery and ensure that it is properly delivered.

Only when the purchaser is totally satisfied that the contract has been fulfilled should payment be authorized.

Instructions for Completing the As-Delivered Weight Analysis Calculation Worksheet

In row (a) on the worksheet, fill in the vehicle weight from a certified scale when the following conditions are met:

(1) All manufacturing work is completed.
(2) Water, fuel, and foam tanks are full.
(3) Ground ladders are stored on the vehicle.

In rows (b) through (k), calculate the expected hose load by multiplying the length of hose by the standard values for weight per unit length and enter the result in column 7. Use the values in Table B.5.1 or obtain specific values for the brand of hose being used.

In row (l), multiply the number of seat belt–equipped seating positions by the allowance of 200 lb per person and enter the result in column 7.

In row (m), multiply the number of seat belt–equipped seating positions by the allowance of 70 lb per person, unless the purchaser has specified that this allowance is not needed, and enter the result in column 7.

In row (n), enter the miscellaneous equipment allowance as determined in 5.1.2(8) in column 7.

Divide the hose, personnel, and equipment weights in column 7 between the front and rear axles according to the indicated percentages (or as appropriate from a detailed weight analysis).

In row (o), enter the sum of the values from rows (a) through (n) for each of columns 7 through 9.

In row (p), record the gross vehicle and gross axle weight ratings from the manufacturer's data label affixed inside the driving compartment.

Subtract the values in row (o) from row (p) and enter the difference in row (q). This is the expected reserve axle capacity of the in-service vehicle. If this number is negative, consult the vehicle manufacturer.

Annex C Weights and Dimensions for Common Equipment

This annex is not a part of the requirements of this NFPA document but is included for informational purposes only.

C.1 The worksheet shown in Figure C.1 is provided for use by the purchaser in calculating the portable equipment load anticipated to be carried on the apparatus. To ensure that the apparatus chassis is capable of carrying the installed equipment (pump, tank, etc.) plus the specified portable equipment load with an appropriate margin of safety, the purchaser should use this worksheet to provide apparatus vendors with the weight of the equipment they anticipate carrying when the apparatus is placed in service.

The approximate measurements and weights of equipment that are commonly available and used during fire department operations are listed on the worksheet. Where size and weight are not provided, or more specific information is available, the purchaser should provide this information. The purchaser should fill in the number of units of each piece of equipment they anticipate carrying in the column titled "Quantity" and multiply that by the weight per unit to get the total weight. The dimensions of each piece are given to assist in planning compartment size or the location on the fire apparatus. Where the purchaser desires to carry specific equipment in a specific compartment, that compartment designation should be shown in the column titled "Compartment Location."

--`,,```,,,,````-`-`,,`,,`,`,,`---

Copyright National Fire Protection Association
Provided by IHS under license with NFPA
No reproduction or networking permitted without license from IHS
Not for Resale

WORKSHEET FOR DETERMINING EQUIPMENT WEIGHT ON WILDLAND FIRE APPARATUS

Equipment Description	Dimensions (in.) D = Diameter	Weight (lb)	Quantity	Total Weight (lb)	Compartment Location
HOSE					
Hose, booster, ¾ in. × 100 ft	1200 × 1.28 D	59			
Hose, booster, ¾ in. × 50 ft	600 × 1.28 D	30			
Hose, booster, 1 in. × 100 ft	1200 × 1.56 D	79			
Hose, booster, 1 in. × 50 ft	600 × 1.56 D	41			
Hose, forestry, 1 in. × 100 ft roll	1.5 × 32 D	20			
Hose, DJ, 1½ in. × 50 ft roll	3 × 19 D	18			
Hose, DJ, 1¾ in. × 50 ft, with 1½ in. couplings roll	3.25 × 19 D	19			
Hose, DJ, 2 in. × 50 ft, with 1½ in. couplings roll	3.5 × 19 D	25			
Hose, DJ, 2½ in. × 50 ft roll	4.5 × 20 D	32			
Hose, hydrant fill, 2½ in. × 25 ft roll	4.5 × 15 D	16			
Hose, LW, cotton, 1½ in. × 100 ft roll	3.25 × 30 D	22			
Hose, LW, cotton, 1½ in. × 50 ft roll	3.25 × 15 D	12			
Hose, LW, cotton, 2 in. × 50 ft, with 1½ in. couplings roll	3.75 × 15.5 D	14			
Hose, LW, nitrile jacket, 1 in. × 100 ft roll	3.25 × 40 D	33			
Hose, LW, nitrile jacket, 1 in. × 50 ft roll	3.25 × 20 D	18			
Hose, LW, nitrile jacket, 2 in. × 50 ft roll	3.75 × 21 D	24			
Hose, cotton jacket, rubber lined, 250 psi, 1 in. × 100 ft roll	1.5 × 32 D	28			
Hose, cotton jacket, rubber lined, 250 psi, 1½ in. × 100 ft roll	3 × 32 D	33			
Hose, cotton–synthetic lined, 450 psi, 1 in. × 100 ft roll	1.5 × 32 D	20			
Hose, cotton–synthetic lined, 450 psi, 1½ in. × 100 ft roll	3 × 32 D	27			
Hose, synthetic lightweight lined type I, 450 psi, 1 in. × 100 ft roll	1.5 × 28 D	9			
Hose, synthetic lightweight lined type I, 450 psi, 1½ in. × 100 ft roll	3 × 28 D	16			
Hose, abrasion resistant synthetic lightweight lines type II, 450 psi, 1 in. × 100 ft roll	1.5 × 32 D	9			
Hose, abrasion resistant synthetic lightweight lines type II, 450 psi, 1½ in. × 100 ft roll	3 × 32 D	14			
Hose, synthetic garden hose, ¾ in. × 50 ft	600 × ¾ D	12			
Hose, ¾ in. cotton, 100 ft, roll	1 × 12 D	5			
SUCTION HOSE					
Hose, hard suction, 1½ in. × 8 ft	96 × 2 D	10			
Hose, hard suction, 1½ in. × 10 ft	120 × 2 D	13			
Hose, hard suction, 2 in. × 8 ft	96 × 2.5 D	19			
Hose, hard suction, 2 in. × 10 ft	120 × 2.5 D	22			

© 2006 National Fire Protection Association NFPA 1906 (p. 1 of 8)

FIGURE C.1 Worksheet for Determining Weight on Wildland Fire Apparatus.

Copyright National Fire Protection Association
Provided by IHS under license with NFPA
No reproduction or networking permitted without license from IHS Not for Resale

WORKSHEET FOR DETERMINING EQUIPMENT WEIGHT ON WILDLAND FIRE APPARATUS *(continued)*

Equipment Description	Dimensions (in.) D = Diameter	Weight (lb)	Quantity	Total Weight (lb)	Compartment Location
SUCTION HOSE *(continued)*					
Hose, hard suction, 2½ in. × 8 ft	96 × 3 D	20			
Hose, hard suction, 2½ in. × 10 ft	120 × 3 D	25			
Hose, hard suction, 3 in. × 8 ft	96 × 3.5 D	31			
Hose, hard suction, 3 in. × 10 ft	120 × 3.5 D	35			
Hose, hard suction, 4 in. × 8 ft	96 × 4.5 D	37			
Hose, hard suction, 4 in. × 10 ft	120 × 4.5 D	42			
Hose, hard suction, 4½ in. × 8 ft	96 × 5.5 D	52			
Hose, hard suction, 4½ in. × 10 ft	120 × 5.5 D	58			
STRAINERS					
Strainer, barrel, 1½ in.	5 × 2 D	2			
Strainer, barrel, 2 in.	6 × 2.75 D	3			
Strainer, barrel, 2½ in.	6.3 × 3.25 D	4			
Strainer, basket, 3 in.	10 × 4 D	9			
Strainer, basket, 4 in.	15 × 5.75 D	11			
Strainer, basket, 4½ in.	17 × 6.25 D	26			
Strainer, rope, ½ in. × 20 ft	24 × 2 D	1			
Strainer, floating, 4.5 in.	7 × 21.5 × 26.5	26			
PORTABLE OR FOLDING TANK					
Tank, portable, 1000 gal	99 × 7 × 30	125			
Tank, portable, 2000 gal	135 × 7 × 30	165			
Tank, portable, 3000 gal	159 × 7 × 30	185			
NOZZLES					
Nozzle, adjustable combination, 1 in. aluminum	5 × 1.5 D	2			
Nozzle, adjustable combination, 1 in. plastic	5 × 1.5 D	1			
Nozzle, adjustable combination, 1½ in. aluminum	6 × 2 D	1			
Nozzle, adjustable combination, 1½ in. plastic	6 × 2 D	1			
Nozzle, ball shutoff with tip, 1 in. aluminum		1			
Nozzle, ball shutoff with tip, 1½ in. aluminum		2			
Nozzle, twin tip, 1 in. aluminum	1.5 × 4 × 7	2			
Nozzle, twin tip, 1½ in. aluminum	2 × 4 × 7	2			
Nozzle, smooth bore, screw tip, 1 in.	1.5 × 2.5 × 7	2			
Nozzle, smooth bore, screw tip, 1½ in.	2 × 3 × 7	2			

© 2006 National Fire Protection Association NFPA 1906 (p. 2 of 8)

FIGURE C.1 *Continued*

Copyright National Fire Protection Association
Provided by IHS under license with NFPA
No reproduction or networking permitted without license from IHS
Not for Resale

WORKSHEET FOR DETERMINING EQUIPMENT WEIGHT ON WILDLAND FIRE APPARATUS *(continued)*

Equipment Description	Dimensions (in.) D = Diameter	Weight (lb)	Quantity	Total Weight (lb)	Compartment Location
NOZZLES *(continued)*					
Nozzle, adjustable combination with ball valve, 1 in. aluminum		2			
Nozzle, adjustable combination with ball valve, 1½ in. aluminum		3			
Garden hose nozzle	4 × 1 D	0.5			
Nozzle, booster, 1 in. aluminum	9.6 × 2.5 D	4			
Nozzle, booster, 1 in. brass	9.6 × 2.5 D	4			
Nozzle, foam attachment, 1.5 in.	15.9 × 6 D (bottom) × 3 D (tip)	5			
Nozzle, foam, 2.5 in., with pickup tube	40.5 × 4.5 D	5			
Nozzle, foam, deck gun, with pickup hose	Pickup 16 × 1 D Nozzle 7 × 6 D	19			
Nozzle, forestry, 1 in.	6.8 × 2 D	1			
Nozzle, handline, 1.5 in. aluminum	9.9 × 2.5 D	4			
Nozzle, handline, 1.5 in. brass	9.9 × 2.5 D	7			
Nozzle, straight tip, 1.5 in. aluminum, with shutoff	Shutoff 2.5 × 4.9 Tip 1.5 × 4.5	3			
Nozzle, straight tip, 1.5 in. brass, with shutoff	Shutoff 2.5 × 4.9 Tip 1.5 × 4.5	6			
Nozzle, foam, 1½ in. aluminum					
Nozzle, foam, 1 in. aluminum					
Nozzle, foam, 1½ in. PVC					
Nozzle, foam, ¾ in. PVC					
HOSE LINE FITTINGS					
Tee, 1 in. × 1 in. × ¾ in.					
Tee, 1 in. × 1 in. × 1 in.					
Tee, 1½ in. × 1½ in. × 1 in.					
Tee, with valve, 1½ in. × 1½ in. × 1 in.					
Ejector					
Bleeder valve, 1½ in.					
Check and bleeder valve, 1½ in. × 1½ in. × 1 in.		6			
Ball valve shutoff, 1 in.		1			
Ball valve shutoff, 1½ in.		2			
Foot valve, 1½ in.					
Pressure relief valve, 1½ in. × 1½ in. × 1 in.					
Pressure-reducing valve, 1 in.					
Pressure-reducing valve, 1½ in.					
Gated wye, 1 in.					
Gated wye, 1½ in.					

© 2006 National Fire Protection Association NFPA 1906 (p. 3 of 8)

FIGURE C.1 ***Continued***

Copyright National Fire Protection Association
Provided by IHS under license with NFPA
No reproduction or networking permitted without license from IHS
Not for Resale

WORKSHEET FOR DETERMINING EQUIPMENT WEIGHT ON WILDLAND FIRE APPARATUS *(continued)*

Equipment Description	Dimensions (in.) D = Diameter	Weight (lb)	Quantity	Total Weight (lb)	Compartment Location
HOSE LINE FITTINGS *(continued)*					
Plain wye, 1 in.					
Plain wye, 1½ in.					
Gated Siamese, 1½ in.					
Gated Siamese, 2½ in.					
Siamese wye, 1½ in.					
Siamese wye, 1½ in.					
Adapter, 1½ in. NH-F to 1½ in. NPSH-M					
Adapter, 1½ in. NPSH-F to 1½ in. NH-M					
Cap, 1 in.					
Cap, 1½ in.					
Cap, 2½ in.					
Check valve with bleeder, 1½ in.					
Adapter, 1 in. double male		1			
Adapter, 1 in. double female		1			
Adapter, double female, 1.5 in., aluminum	3 × 2.5 D	1			
Adapter, double female, 1.5 in., brass	3 × 2.5 D	2			
Adapter, double female, 2.5 in., aluminum	3.25 × 4 D	1			
Adapter, double female, 2.5 in., brass	3.25 × 4 D	4			
Adapter, double male, 1.5 in., aluminum	2.5 × 2 D	1			
Adapter, double male, 1.5 in., brass	2.5 × 2 D	1			
Adapter, double male, 2.5 in., aluminum	3 × 4 D	2			
Adapter, double male, 2.5 in., brass	3 × 4 D	1			
Adapter, reducer, 1.5 in. F × 1 in. M, aluminum	1.5 × 3 D	1			
Adapter, reducer, 1.5 in. F × 1 in. M, brass	1.5 × 3 D	1			
Adapter, reducer, 2.5 in. F × 1.5 in. M, aluminum	2 × 4 D	1			
Adapter, reducer, 2.5 in. F × 1.5 in. M, brass	2 × 4 D	3			
Adapter, increaser, ¾ in. to 1 in.	1 × 1.5 D	1			
Adapter, increaser, 1 in. to 1½ in.	1 × 2 D	1			
Adapter, increaser, 1½ in. to 2½ in.	3 × 2	2			
Wye, gated, 1.5 in. F × (2) 1 in. M, aluminum	4.75 × 6 × 3.25	2			
Wye, gated, 1.5 in. F × (2) 1.5 in. M, aluminum	5 × 7 × 4	4			
Wye, gated, 2.5 in. F × (2) 1.5 in. M, aluminum	7.75 × 8.25 × 5	5			
Wye, gated, 2.5 in. F × (2) 1.5 in. M, brass	7.75 × 8.25 × 5	9			
Hose clamp		2			
Hose reel crank		3			

© 2006 National Fire Protection Association NFPA 1906 (p. 4 of 8)

FIGURE C.1 ***Continued***

Copyright National Fire Protection Association
Provided by IHS under license with NFPA
No reproduction or networking permitted without license from IHS
Not for Resale

WORKSHEET FOR DETERMINING EQUIPMENT WEIGHT ON WILDLAND FIRE APPARATUS *(continued)*

Equipment Description	Dimensions (in.) D = Diameter	Weight (lb)	Quantity	Total Weight (lb)	Compartment Location
WILDLAND TOOLS					
Axe, brush	Head 9 × 5 × 1 Handle 36 × 1.5 D	7			
Broom, fire swatter	Swatter 11.5 × 15 × 0.25 Handle 60 × 1.25 D	6			
Extinguisher, water pump can	17 × 15 × 7	56			
Pick, clay	Head 16.5 × 3 × 0.5 Handle 36 × 1.5 D	9			
Rake, fire	Rake 12 × 3.5 × 1 Handle 60 × 1.75 D	5			
Tool, Pulaski	Head 13.25 × 4.75 × 1 Handle 33.25 × 1.5 D	6			
Shovel, long handle	Head 11.5 × 8.5 × 3 Handle 60 × 1.75 D	5			
Hooks, hay bale	Hook 10 × 0.5 D Handle 3 × 4.5 × 0.5	2			
Tool, 4-tine hand fork	Tines 12 × 8.75 × 0.5 Handle 48 × 1.5 D	4			
Pump, portable, water, small gasoline	17.5 × 16 × 19.5	50			
Saw, chain, gasoline 61 cc, with 19 in. bar	Engine 16.75 × 9.5 × 11.25 Bar 19 × 3.75 × 0.25	19			
Oil, chainsaw bar		2			
Gasoline, 1 gal		3			
Oil, 2 cycle mix		1			
Chain, spare for chainsaw		1			
Wrench, chainsaw					
Wedges, felling					
Chaps, protective					
PPE kit (helmet, canteen, fire shelter)	18 × 10 D	8			
Brush, foxtail	8 × 1 D	1			
MRE	12 × 7.5 × 2.5	2			
Tent, fire shelter	10 × 6 × 3.5	4			
Bucket, folding					
Rake, collapsible					
Combi		6			
McCombi		5			
McLeod		6			
Pump backpack		5			
Torch drip		6			
Canteen, 1 qt		3			
Canteen, 4 qt		9			
Fusees, 36/case					

© 2006 National Fire Protection Association NFPA 1906 (p. 5 of 8)

FIGURE C.1 ***Continued***

Copyright National Fire Protection Association
Provided by IHS under license with NFPA
No reproduction or networking permitted without license from IHS
Not for Resale

WORKSHEET FOR DETERMINING EQUIPMENT WEIGHT ON WILDLAND FIRE APPARATUS *(continued)*

Equipment Description	Dimensions (in.) D = Diameter	Weight (lb)	Quantity	Total Weight (lb)	Compartment Location
WILDLAND TOOLS *(continued)*					
Safety glasses					
Kit, belt weather		2			
Chain, tow		35			
Flashlight					
Knapsack/GSA bag					
Food, 48 hour supply		20			
Personal radio		2			
Binoculars		2			
GPS, handheld		1			
Fire finder, infrared					
Cooler or ice chest		12			
Pail, collapsible		1			
MEDICAL					
First aid kit, 10-person					
Burn kit					
Body fluids barrier kit		1			
FOAM EQUIPMENT					
Eductor, foam, 1.5 in. F × 1.5 in. M	9.5 × 2.75 D	10			
Eductor, foam, pickup tube	15.9 × 1 D	8			
Foam, Class A, 5 gal pail	14.5 × 11.25 D	46			
FIRE EXTINGUISHERS					
Extinguisher, dry chemical, 5 lb, Class ABC	18 × 4 D	8			
Extinguisher, dry chemical, 10 lb, Class ABC	22 × 5 D	17			
Extinguisher, dry chemical, 20 lb, Class ABC	25 × 8 D	30			
Extinguisher, water, pressurized, 2.5 gal, Class A	24 × 7 D	27			
SMALL HAND TOOLS					
Bolt cutter		8			
Chisel, cold, 1 in. × 12 in.	12 × 1 D	1			
Chisel, cold, ½ in. × 6 in.	6 × 0.5 D	1			
Chisel, cold, ¼ in. × 6 in.	6 × 0.25 D	1			
Chisel, cold, ¾ in. × 10 in.	10 × 0.75 D	1			
Cutter, glass, glazier's swivel cutter	12 × 4 × 6	4			
File, metal, 10 in.	10 × 0.75 × 0.25	1			

© 2006 National Fire Protection Association

FIGURE C.1 *Continued*

Copyright National Fire Protection Association
Provided by IHS under license with NFPA
No reproduction or networking permitted without license from IHS
Not for Resale

WORKSHEET FOR DETERMINING EQUIPMENT WEIGHT ON WILDLAND FIRE APPARATUS *(continued)*

Equipment Description	Dimensions (in.) D = Diameter	Weight (lb)	Quantity	Total Weight (lb)	Compartment Location
SMALL HAND TOOLS *(continued)*					
Hammer, ball-peen, 12 oz.	Head 3.5 × 1 D Handle 12 × 1 D	1			
Hammer, ball-peen, 16 oz.	Head 3.75 × 1 D Handle 12 × 1	2			
Hammer, ball-peen, 24 oz.	Head 3.75 × 1.25 D Handle 12 × 1	2			
Hammer, ball-peen, 36 oz.	Head 4 × 1.25 D Handle 12 × 1	3			
Hammer, claw	Head 5 × 1.25 D Handle 13 × 1.25 D	2			
Knife, cutter, seat belt	4 × 2 × 0.25	1			
Knife, putty, ¼ in.	7.25 × 1.25 × 0.5	1			
Knife, utility	6 × 1.25 × 0.75	1			
Pliers, arc joint, 10 in.	10 × 2.25 × 0.5	1			
Pliers, arc joint, 16 in.	16 × 4.5 × 0.5	1			
Pliers, diagonal cutting, 8 in.	8 × 2 × 0.5	1			
Pliers, lineman's, 8 in.	8 × 2 × 0.5	1			
Pliers, needle nose, 6 in.	6 × 2 × 0.5	1			
Pliers, slip joint, 8 in.	8 × 1.75 × 0.5	1			
Pliers, vise grip, 10 in.	10 × 2 × 0.5	1			
Punch, center	4 × 0.25 D	1			
Punch, window, spring loaded	5 × 0.5 D	1			
Saw, drywall	8.5 × 1 D	1			
Saw, hand hacksaw, with spare blades and wire blades	18.5 × 4 × 1	2			
Saw, hand, crosscut	28 × 6 × 1	2			
Screwdriver, Phillips, #2 × 6	8 × 1.25 D	1			
Screwdriver, Phillips, #3 × 8	10.25 × 1.25 D	1			
Screwdriver, slotted, ¼ × 2.5	2.5 × 1 D	1			
Screwdriver, slotted, ¼ × 6	8 × 1 D	1			
Screwdriver, slotted, ⅜ × 12	12 × 1.25 D	1			
Screwdriver, slotted, 5⁄16 × 8	10 × 1.25 D	1			
Shears, metal, snips	9.5 × 2.5 × 0.75	1			
Socket, spark plug	2.75 × 1 D	1			
Tape, measure, roll	3.25 × 3.25 × 1.25	1			
Tool box, metal, 20 in., hand tools	20 × 8 × 9	11			
Tool, axe, hand	Head 5.5 × 3.75 × 0.75 Handle 11.75 × 1.5 × 1	4			
Wrench, adjustable, 12 in.	12 × 3 × 0.25	2			
Wrench, adjustable, 8 in.	8 × 2 × 0.25	1			
Wrench, adjustable, 10 in.	10 × 2.5 × 0.25	1			

© 2006 National Fire Protection Association NFPA 1906 (p. 7 of 8)

FIGURE C.1 ***Continued***

Copyright National Fire Protection Association
Provided by IHS under license with NFPA
No reproduction or networking permitted without license from IHS
Not for Resale

WORKSHEET FOR DETERMINING EQUIPMENT WEIGHT ON WILDLAND FIRE APPARATUS *(continued)*

Equipment Description	Dimensions (in.) D = Diameter	Weight (lb)	Quantity	Total Weight (lb)	Compartment Location
SMALL HAND TOOLS *(continued)*					
Wrench, combination, metric, open end, 8 mm to 18 mm (11 piece)	13 × 12 × 1	3			
Wrench, combination, SAE, open end, 5⁄16 in. to 1 in. (11 piece)	13 × 12 × 1	3			
Wrench, gas, shutoff	8 × 1.5 × 0.5	1			
Wrench, hand chain	12 × 2 × 1	2			
Wrench, pipe, adjustable, 18 in.	18 × 3 × 0.5	4			
Wrench, ratchet, 3⁄8 in. drive, metric 8 mm to 18 mm (24 piece)	9.75 × 7.5 × 3	4			
Wrench, ratchet, 3⁄8 in. drive, SAE 3⁄8 in. to 3⁄4 in. (24 piece)	9.75 × 7.5 × 2	4			
Wrench, tire, lug	27.75 × 1 D	5			
Gauge, air pressure, tire	6.25 × 1 × 0.5	1			
Hydrant wrench		5			
Wrench, spanner 2½ in.		2			
Wrench, spanner, 1½ in.		1			
Wrench, spanner, pin lug		1			
Reflector, emergency					
Cables, jumper		4			
Air hose, coiled		1			
Jack, hydraulic		12			
Sheeting, plastic, 10 ft × 20 ft		5			
Tape, duct		2			
Wheel chocks	8 × 9 × 12	8			
GASOLINE, ENGINE, SPARE PARTS (SMALL ENGINE AND TOOLS)					
Container, safety can, 2.5 gal	11.5 × 11.5 D	22			
Electrical, tape	0.75 × 3.5 D	1			
Engine, air filter	3.25 × 4.5 D	1			
Engine, fuel filter	2.75 × 1 D	1			
Engine, oil filter	3.25 × 3 D	1			
Engine, oil, 1 qt	8.5 × 4.25 × 2.25	2			
Engine, spare O-rings, 10	1.25 × 2.5 D	1			
Engine, spark plug	2.75 × 0.75 D	1			
Funnel, plastic	9 × 5 D	1			
Rags, mechanics	16.75 × 11.5 × 8.25	5			
Saw, blade, extra 10 blades	12.25 × 0.5 × 0.5	1			
Saw, wood, extra chain (gas)	10.5 × 2 × 0.5	1			
Gasoline can, 5 gal		40			
Funnel		1			

© 2006 National Fire Protection Association

FIGURE C.1 ***Continued***

Copyright National Fire Protection Association
Provided by IHS under license with NFPA
No reproduction or networking permitted without license from IHS
Not for Resale

Annex D Guidelines for First Line and Reserve Apparatus

This annex is not a part of the requirements of this NFPA document but is included for informational purposes only.

D.1 General. To maximize fire fighter capabilities and minimize risk of injuries, it is important that fire apparatus be equipped with the latest safety features and operating capabilities. In the last 10 to 15 years, much progress has been made in upgrading functional capabilities and improving the safety features of fire apparatus. Apparatus manufactured prior to 1991 usually included only a few of the safety upgrades required by the 1991 and subsequent editions of the NFPA fire department apparatus standards or the equivalent Underwriters' Laboratories of Canada (ULC) standards. Because the changes, upgrades, and fine tuning to NFPA 1901, *Standard for Automotive Fire Apparatus*, since 1991 have been truly significant, especially in the area of safety, fire departments should seriously consider the value (or risk) to fire fighters by keeping pre-1991 fire apparatus in first-line service.

The 1991 edition of the NFPA fire department apparatus standards included, among many other things, requirements for fully enclosed driving and riding areas, auxiliary braking systems, reflective striping, improved warning lights, and prohibition of roof-mounted audible warning devices. The minimum tip load for an aerial ladder was set at 250 lb (114 kg), and other requirements, such as a minimum rail height, were added to make the aerial ladder safer for fire fighters to use. The 1991 editions have been recognized as the benchmark from which improved and safer fire apparatus have evolved. It is recommended that only apparatus that were designed and manufactured to meet the 1991 or later editions of the NFPA fire department apparatus standards, or apparatus that have been refurbished in accordance with NFPA 1912, *Standard for Fire Apparatus Refurbishing*, to meet the 1991 or later editions of the NFPA fire department apparatus standards, be permitted to operate in first-line service. This will ensure that, while the apparatus might not totally comply with the current editions of the automotive fire apparatus standards, many of the improvements and upgrades required by the standards since 1991 are available for the fire fighters who use the apparatus.

It is recommended that an apparatus manufactured prior to 1991 that is less than 25 years old, that has been properly maintained, and that is still in serviceable condition should be placed in reserve status and upgraded to incorporate as many features of the post-1991 fire apparatus as possible *(see Section D.3)*. Apparatus that were not manufactured to the applicable NFPA fire apparatus standards or that are over 25 years old should be replaced.

D.2 How the Standards Have Changed. It is a generally accepted fact that fire apparatus, like all types of mechanical devices, have a finite life. How long that is depends on many factors. Some of those factors are vehicle mileage and engine hours, quality of the preventative maintenance program, quality of the driver training program, whether the fire apparatus was used within the design parameters, whether the apparatus was manufactured on a custom or commercial chassis, quality of workmanship by the original manufacturer, quality of the components used, and availability of replacement parts. In the fire service, there are fire apparatus with 8 to 10 years of service that are simply worn out. There are also fire apparatus that were manufactured with quality components, that have had excellent maintenance, and that have responded to a minimum number of incidents that are still in serviceable condition after 20 years. Most would agree that the care of fire apparatus while it is being used and the quality and timeliness of maintenance are perhaps the most significant factors in determining how well a fire apparatus ages.

Prior to 1991, the single fire department apparatus standard was NFPA 1901. It was basically a "reactive standard." If something worked well in field use for a few years, it might have been suggested for inclusion in NFPA 1901. It was a very basic standard. In the late 1980s, the Technical Committee on Fire Department Apparatus decided to become proactive and greatly enhance the value of the standard for the fire service. Task groups were appointed to develop reasonable requirements for the various components that made up a fire apparatus, and a safety task group was charged with looking at issues across the board that would improve the safety of the fire fighters who have to use the apparatus.

The completely revised 1991 editions of the fire department apparatus standards were the result of these efforts and the full committee's strong desire to make the automotive fire apparatus standards not only more "safety oriented" but also more user friendly. In 1991, four standards were actually issued: NFPA 1901, *Standard for Pumper Fire Apparatus*, NFPA 1902, *Standard for Initial Attack Fire Apparatus*, NFPA 1903, *Standard for Mobile Water Supply Fire Apparatus*, and NFPA 1904, *Standard for Aerial Ladder and Elevating Platform Fire Apparatus*.

Contained within the 1991 editions of the fire department apparatus standards were requirements for such items as increased battery capacity to ensure starting under most conditions; intersection lights for increased visibility; removal of all roof-mounted audible warning devices to reduce hearing problems; a flashing light in the cab to warn if a cab or body door is open; a backup alarm; an automatic transmission to make it easier to drive (unless the purchaser has a specific reason for a manual transmission); fully enclosed riding areas with reduced noise (dBa) levels to keep the crew members safe and informed; seats and seat belts for all crew members riding on the apparatus; fail-safe door handles so the sleeve of a coat will not inadvertently catch a handle and open a door; and signs requiring everyone to be seated and belted.

In the pump area, the standard specified that 3 in. (75 mm) or larger valves be "slow close," that caps on intakes and discharge outlets be tested to 500 psi (3400 kPa), that an intake relief valve be provided to help manage incoming pressure, that 30 degree sweep elbows be provided on the discharges to eliminate hose kinking, and that all 3 in. (75 mm) and larger discharges be eliminated from the pump panel to reduce the possibility of injuries to the pump operator.

Fire apparatus equipped with electronic or electric engine throttle controls were required to include an interlock system to prevent engine speed advancement, unless the chassis transmission is in neutral with the parking brake engaged; or unless the parking brake is engaged, the fire pump is engaged, and the chassis transmission is in the correct pumping gear. Starting with the 1999 edition of NFPA 1901, all apparatus were required to include an interlock system to control engine speed advancement at the operator's panel.

In the body area, the minimum step surface size and load-carrying capabilities were increased, handrails were required to be slip resistant, and reflective striping was required on all four sides of the apparatus. Electrical system requirements for line-voltage systems were added to include the use of "listed" components that were grounded.

Many requirements were added to increase the operating capabilities of all aerial devices. For aerial ladders, the mini-

Copyright National Fire Protection Association
Provided by IHS under license with NFPA
No reproduction or networking permitted without license from IHS
Not for Resale

mum design strength of the rungs was increased, a height requirement for the hand rails was specified, a minimum load-carrying requirement for folding steps was specified, and the aerial ladder had to have a minimum carrying capacity of 250 lb (114 kg) at the tip when the aerial ladder is at 0 degrees elevation and maximum extension. Where a water tower was equipped with a ladder, the same requirements that applied to an aerial ladder were required of the ladder on the water tower.

The carrying capacity of elevating platforms at 0 degrees elevation and maximum extension was raised to 750 lb (340 kg). Elevating platforms were also required to have handrails, breathing air available in the platform (with low air warning capability) for at least two fire fighters, and a water curtain cooling system under the platform.

All aerial devices had to be capable of supporting a static load of 1½ times their rated capacity in any position. A requirement for a stabilizer movement alarm and reflective striping with warning lights was added. Interlocks to prevent inadvertent movement to an unsupported side and to prevent raising the aerial device prior to the stabilizers being deployed were specified. One hundred percent nondestructive tests became a requirement. All these requirements were included in the 1991 editions of the NFPA fire department apparatus standards.

In 1996, the four fire department apparatus standards (NFPA 1901, NFPA 1902, NFPA 1903, and NFPA 1904) were again combined into a single standard, NFPA 1901, *Standard for Automotive Fire Apparatus*. The 1996 and 1999 editions of NFPA 1901 further enhanced the safety and operating characteristics of all the apparatus. For example, the 1999 edition included chapters on quints and mobile foam apparatus, further defined slip resistance of stepping and walking surfaces, required better mounting of equipment in the driving and crew compartment, required predelivery testing of foam proportioning systems, and specified that fill stations for breathing-air cylinders be designed to totally contain a rupturing cylinder.

The 2003 edition continued to refine the requirements in the driving and crew riding areas with increased head height requirements at seating positions and additional requirements for storage of SCBAs in seatbacks, both aimed at reducing fire fighter injuries. The test protocol for slip resistance of standing and walking surfaces was better defined. There was a general cleanup of the requirements throughout the document to enhance the operational usefulness of the apparatus.

D.3 Upgrading Fire Apparatus. Any apparatus, whether in first-line or reserve service, should be upgraded in accordance with NFPA 1912 as necessary to ensure that the following features are included at a minimum:

(1) Fully enclosed seating is provided for all members riding on the fire apparatus.
(2) Warning lights meet or exceed the current standard.
(3) Reflective striping meets or exceeds the current standard.
(4) Slip resistance of walking surfaces and handrails meets the current standard.
(5) A low-voltage electrical system load manager is installed if the total connected load exceeds the alternator output.
(6) The alternator output is capable of meeting the total continuous load on the low-voltage electrical system.
(7) Where the GVWR is 36,000 lb (16,000 kg) or more, an auxiliary braking system is installed and operating correctly.
(8) Ground and step lighting meets or exceeds the current standard.
(9) Noise levels in the driving and crew compartment(s) meet the current standard, or appropriate hearing protection is provided.
(10) All horns and sirens are relocated to a position as low and as far forward as possible.
(11) Seat belts are available for every seat and are new or in serviceable condition.
(12) Sign plates are present stating no riding on open areas.
(13) A pump shift indicator system is present and working properly for vehicles equipped with an automatic chassis transmission.
(14) For vehicles equipped with electronic or electric engine throttle controls, an interlock system is present and working properly to prevent engine speed advancement at the operator's panel, unless the chassis transmission is in neutral with the parking brake engaged; or unless the parking brake is engaged, the fire pump is engaged, and the chassis transmission is in pumping gear.
(15) All loose equipment in the driving and crew areas is securely mounted to prevent its movement in case of an accident.

D.4 Proper Maintenance of Fire Apparatus. In addition to needed upgrades to older fire apparatus, it is imperative that all fire apparatus be checked and maintained regularly to ensure that they will be reliable and safe to use. The manufacturers' instructions should always be followed when maintaining the fire apparatus. Special attention should be paid to the following items, as they are particularly critical to maintaining a reliable unit:

(1) Engine belts, fuel lines, and filters have been replaced in accordance with the manufacturers' maintenance schedule(s).
(2) Brakes, brake lines, and wheel seals have been replaced or serviced in accordance with the manufacturers' maintenance schedule.
(3) Tires and suspension are in serviceable condition, and tires are not more than 7 years old.
(4) The radiator has been serviced in accordance with the manufacturers' maintenance schedule, and all cooling system hose are new or in serviceable condition.
(5) The alternator output meets its rating.
(6) A complete weight analysis shows the fire apparatus is not over individual axle or total GVWRs.
(7) The fire pump meets or exceeds its original pump rating.
(8) The water tank and baffles are not corroded or distorted.
(9) If equipped with an aerial device, a complete test to original specifications has been conducted and certified by a certified testing laboratory.
(10) If so equipped, the generator and line-voltage accessories have been tested and meet the current standard.

D.5 Refurbishing or Replacing Fire Apparatus. Fire department administrators and fire chiefs should exercise special care when evaluating the cost of refurbishing or updating an apparatus versus the cost of a new fire apparatus. Apparatus that are refurbished should comply with the requirements of NFPA 1912. A thorough cost-benefit analysis of the value of

Copyright National Fire Protection Association
Provided by IHS under license with NFPA
No reproduction or networking permitted without license from IHS
Not for Resale

upgrading or refurbishing a fire apparatus should be conducted. In many instances, it will be found that refurbishing costs will greatly exceed the current value of similar apparatus. Experience has also shown that refurbishing fire apparatus that is over 20 years old, other than to paint or repair the apparatus, is a very poor investment.

Some of the factors to consider and evaluate when considering whether to refurbish or replace a fire apparatus include the following:

(1) What is the true condition of the existing apparatus? Has it been in a major accident, or has something else happened to it that would make spending significant money on it ill advised?
(2) Does the current apparatus meet the program needs of the area it is serving? Is it designed for the way the fire department operates today and is expected to operate into the foreseeable future, or is the apparatus functionally obsolete? Can it carry everything that is needed to do the job without being overloaded?
(3) If the apparatus is refurbished, will it provide the level of safety and operational capability of a new fire apparatus? Remember, in many cases, refurbishing does not mean increasing the GVWR, so it is not possible to add a larger water tank or additional foam agent tanks, or to carry massive amounts of additional equipment. Enclosing personnel riding areas might add enough weight to the chassis, so that existing equipment loads need to be reduced to avoid overloading the chassis. An aerial ladder that does not have a 250 lb (114 kg) tip load rating at 0 degrees elevation and maximum extension cannot be made stronger.
(4) What is the anticipated cost per year to operate the apparatus if it were refurbished, and what would the cost per year be for a new apparatus? Do not forget insurance costs, downtime costs, maintenance costs, depreciation, reliability, and the safety of the users and the public. At what rate are those costs rising each year? Are parts still readily available for all the components on the apparatus? A refurbished 15-year-old apparatus still has 15-year-old parts in it. How long can the fire department operate without the apparatus if it suddenly needed major repairs?
(5) Is there a trade-in value today that will not be there tomorrow? Most apparatus over 12 years old have little trade-in value. Are there creative financing plans or leasing options that can provide a new fire apparatus for little more than the cost of refurbishing or maintaining an older apparatus?

D.6 Conclusion. A fire apparatus is an emergency vehicle that must be relied on to transport fire fighters safely to and from an incident and to operate reliably and properly to support the mission of the fire department. A fire apparatus that breaks down at any time during an emergency operation not only compromises the success of the operation but might jeopardize the safety of the fire fighters relying on that apparatus to support their role in the operation. An old, worn out, or poorly maintained fire apparatus has no role in providing emergency services to a community.

Annex E Informational References

E.1 Referenced Publications. The documents or portions thereof listed in this annex are referenced within the informational sections of this standard and are not part of the requirements of this document unless also listed in Chapter 2 for other reasons.

E.1.1 NFPA Publications. National Fire Protection Association, 1 Batterymarch Park, Quincy, MA 02169-7471.

NFPA 11, *Standard for Low-, Medium-, and High-Expansion Foam*, 2005 edition.

NFPA 1150, *Standard on Foam Chemicals for Fires in Class A Fuels*, 2004 edition.

NFPA 1500, *Standard on Fire Department Occupational Safety and Health Program*, 2002 edition.

NFPA 1901, *Standard for Pumper Fire Apparatus*, 1991 edition.

NFPA 1901, *Standard for Automotive Fire Apparatus*, 1996 edition.

NFPA 1901, *Standard for Automotive Fire Apparatus*, 1999 edition.

NFPA 1902, *Standard for Initial Attack Fire Apparatus*, 1991 edition.

NFPA 1903, *Standard for Mobile Water Supply Fire Apparatus*, 1991 edition.

NFPA 1904, *Standard for Aerial Ladder and Elevating Platform Fire Apparatus*, 1991 edition.

NFPA 1912, *Standard for Fire Apparatus Refurbishing*, 2006 edition.

E.1.2 Other Publications.

E.1.2.1 Parker Hannifin, Racor® Division Publication. Racor®, 3400 Finch Road, Modesto, CA 95354

LF 1093-90, Ember Separation Test Procedure, 2003.

E.1.2.2 SAE Publications. Society of Automotive Engineers, 400 Commonwealth Drive, Warrendale, PA 15096.

SAE J551/2, *Test Limits and Methods of Measurement of Radio Disturbance Characteristics of Vehicles, Motorboats, and Spark-Ignited Engine-Driven Devices*, 1994.

SAE J706, *Rating of Winches*, 2003.

SAE J826, *Devices for Use in Defining and Measuring Vehicle Seating Accommodation*, 1995.

SAE J2180, *A Tilt Table Procedure for Measuring the Static Rollover Threshold for Heavy Trucks*, 1998.

E.1.2.3 U.S. Government Publications. U.S. Government Printing Office, Washington, DC 20402.

Title 49, Code of Federal Regulations, Part 393.65, "All Fuel Systems."

Title 49, Code of Federal Regulations, Part 393.67, "Liquid Fuel Tanks."

Title 49, Code of Federal Regulations, Part 393.69, "Liquefied Petroleum Gas System."

Title 49, Code of Federal Regulations, Part 541, "Federal Theft Prevention Standards."

Title 49, Code of Federal Regulations, Part 567, "Certification."

Title 49, Code of Federal Regulations, Part 571, "Federal Motor Vehicle Safety Standards."

E.2 Informational References. (Reserved)

E.3 References for Extracts in Informational Sections.

NFPA 1901, *Standard for Automotive Fire Apparatus*, 2003 edition.

Copyright National Fire Protection Association
Provided by IHS under license with NFPA
No reproduction or networking permitted without license from IHS
Not for Resale

Index

© 2006 National Fire Protection Association. All Rights Reserved.

The copyright in this index is separate and distinct from the copyright in the document that it indexes. The licensing provisions set forth for the document are not applicable to this index. This index may not be reproduced in whole or in part by any means without the express written permission of NFPA.

-A-

Acceptance B.5
  Definition 3.3.1
Acceptance tests 4.14, A.4.14
  Definition 3.3.2
Access handrails 7.1.12, 8.7, A.8.7
Active horizontal angles of light emission 6.8.15.2.4, 6.8.15.2.5.1
  Definition 3.3.3
Air horns 6.9.3
Air systems, engine ..... 5.2.4, 10.5, A.5.2.4.1.1.1 to A.5.2.4.2.1.3, A.10.5.1.1.1 to A.10.5.1.3.1
Alarms, back-up 6.11
  Definition 3.3.11
Alternator 6.3.1, 6.3.6.1, A.6.3.6.1
  Batteries, wiring to 6.4.5.4
  Documentation 6.14
  Performance test
    At full load 6.13.3.4
    At idle 6.13.3.3
  Temperature exposure 6.6
Anchors, rope/winch 8.10, A.8.10
Angles
  Active horizontal angles of light emission 6.8.15.2.4, 6.8.15.2.5.1
    Definition 3.3.3
  Of approach 4.3.1.1, 5.3.2.3, A.5.3.2.3
    Definition 3.3.4
  Of departure 4.3.1.1, 5.3.2.3, A.5.3.2.3
    Definition 3.3.5
  Grade as measurement of ..... *see* Grades
  Ramp breakover 4.3.1.1, A.5.3.2.2
    Definition 3.3.80
Application of standard 1.3, A.1.3.1
Approach, angle of 4.3.1.1, 5.3.2.3, A.5.3.2.3
  Definition 3.3.4
Approved (definition) 3.2.1, A.3.2.1
Around-the-pump foam proportioning systems 13.2.4, 13.9.3.2, A.13.2.4
ASME pressure vessel 13.8.1, 13.8.6, 14.3.4
  Definition 3.3.6
Atmospheric foam concentrate tanks ..... 13.6, A.13.6.3.2 to A.13.6.10.2
Audible warning devices ..... 6.9, A.6.9.2; *see also* Alarms, back-up; Sirens
  Electrical system failure 6.3.4, A.6.3.4
Authority having jurisdiction (definition) 3.2.2, A.3.2.2
Automatic electrical load management system 6.3.6, A.6.3.6.1
  Definition 3.3.7
Automatic regulating proportioning system 13.4.4, 14.2.1
  Definition 3.3.8, A.3.3.8
Auxiliary braking system 5.3.1.7, 5.3.1.8, A.5.3.1.7
  Definition 3.3.9
Auxiliary engine-driven pumps 4.17.1, 9.4.4
  Definition 3.3.10

-B-

Backflow devices, hydrant A.9.5.1.1
Back-up alarms 6.11
  Definition 3.3.11
Balanced pressure foam proportioning systems 13.2.5, A.13.2.5
Batteries
  Charge status 6.3.4, A.6.3.4
  Pump engines 10.8.2
  Vehicle engines 6.4, A.6.4
Battery disconnect switch 6.4.5, A.6.4.5
  Definition 3.3.12
Body ..... Chap. 8
Booster reels 8.9.5, 8.9.8, 9.6.7, A.8.9.8
Braking systems ..... 5.3.1, A.5.3.1.5 to A.5.3.1.8
Brush rails 16.1
Bubble (foam) (definition) 3.3.13

-C-

Cab tilt systems 7.2
Carbon monoxide monitor (definition) 3.3.14
Carrying capacity, of vehicle 5.1, A.5.1
Center of gravity 4.9.1, A.4.9.1
  Definition 3.3.15
Certification 4.15, 5.1.4, A.4.15, A.5.1.4
  Documents 4.17.1
  Manufacturer certification of test results (for components) ... 4.5
  Optical warning devices 6.8.16, A.6.8.16
  Water tanks 11.5, A.11.5
Chassis ..... Chap. 5
  Definition 3.3.16
  Engines ..... *see* Vehicle engines
Class A fires (definition) 3.3.17
Class A foam 13.1, A.13.1
  Definition 3.3.18
Class A foam concentrate proportioning systems ..... Chap. 13
  Accuracy 13.10, A.13.10.1
  Application 13.1, A.13.1
  Atmospheric foam concentrate tanks ..... 13.6, A.13.6.3.2 to A.13.6.10.2
  Controls 13.4, A.13.4.1
  Design and performance requirements ... 13.3, A.13.3.1, A.13.3.4
  Flush lines 13.3.10
  Foam concentrate pumps 13.7, A.13.7
  Gauges, flowmeters, and indicators 13.5
  Instructions ..... 13.9, A.13.9.3(5)
  Labels ..... 13.9, A.13.9.3(5)
  Plates ..... 13.4.3, 13.9, A.13.9.3(5)
  Pressure vessel concentrate/solution tanks 13.8
  Requirements by types of system 13.2, A.13.2
  Terminology A.13.1
  Testing and documentation ..... 13.11, A.13.11.1(2), A.13.11.1(3)
Clearance, ground 5.3.2.2, A.5.3.2.2
  Definition 3.3.48
Communication equipment ..... 6.3.3, 7.1.13, A.6.3.3(7)
Compartment, enclosed ..... *see* Enclosed compartment
Compartmentation 8.1, A.8.1.1
Compound gauges 9.8.1
  Definition 3.3.19, A.3.3.19
Compressed air foam systems (CAFS) ..... Chap. 14
  Air mixing 14.4, A.14.4
  Air source controls 14.6
  Application 14.1, A.14.1
  Compressed air source 14.3
  Definition 3.3.20, A.3.3.20
  Foam discharge plumbing 14.5, A.14.5
  Gauges, flowmeters, and indicators 14.7, A.14.7.6
  General requirements 14.2, A.14.2.4, A.14.2.5
  Labels, plates, and instructions 14.8
  Manufacturer's predelivery tests 14.9, A.14.9

Copyright National Fire Protection Association
Provided by IHS under license with NFPA
No reproduction or networking permitted without license from IHS
Not for Resale

Capacity rating test 14.9.1, A.14.9.1.3.3
Standby run test 14.9.2
Connections .....*see also* Intake connections
Tank 11.3.1
Construction
Pump 9.4, A.9.4
Water tanks ..... 11.2, A.11.2.3 to A.11.2.5
Continuous duty (definition) 3.3.21
Contractors
Data required of ..... 4.17, A.4.17.2.3(6), A.4.17.2.4
Definition 3.3.22, A.3.3.22
Responsibility of 4.3
Contracts .....*see* Specifying and procuring wildland fire apparatus
Controls 4.7, A.4.7.2
Class A foam concentrate proportioning system 13.4, A.13.4.1
Compressed air source 14.6
Driving compartment 7.3.4, 15.5.5, A.7.3.4.1, A.15.5.5.1
Hydraulic winches 15.5.5, A.15.5.5.1
Pump engine 10.7, A.10.7.1
Pumps 9.7, 9.9, A.9.9
Convenient reach 7.3.4.2
Definition 3.3.23
Cooling systems, engine 5.2.2, 10.3, A.5.2.2.1
Corrosion protection 9.4.3, 11.2.1, 13.6.1, 13.7.2, 13.8.3, A.8.8.2, A.9.4.3, A.13.7.2
Crew area ..... Chap. 7, 16.1.3

-D-

Defect (definition) 3.3.24
Definitions ..... Chap. 3
Delivery, tests on 4.14, A.4.14
Departure, angle of 4.3.1.1, 5.3.2.3, A.5.3.2.3
Definition 3.3.5
Diesel engines
Pumps ..... 10.5.1, A.10.5.1.1.1 to A.10.5.1.3.1
Vehicle ..... 5.2.4.1, A.5.2.4.1.1.1 to A.5.2.4.1.3.1
Direct injection foam proportioning systems 13.2.6, A.13.2.6
Water-powered 13.2.7, A.13.2.7
Discharge outlets ..... 9.6, A.9.6.1 to A.9.6.12
Size 9.6.1, 9.6.2, A.9.6.1
Definition 3.3.25
Documentation
Class A foam proportioning systems ..... 13.11, A.13.11.1(2), A.13.11.1(3)
Fire apparatus 4.17.1
Format of 4.16, A.4.16
Operations and services ..... 4.17.2, A.4.17.2.4, A.14.2.3(6)(g)
DOT cylinder 14.3.4
Definition 3.3.26
Drain valves, cooling system 5.2.2.2
Driving area ..... Chap. 7
Access to 16.1.3
Controls in 7.3.4, 15.5.5, A.7.3.4.1, A.15.5.5.1

-E-

Eductor (definition) 3.3.27, A.3.3.27
Eductor foam proportioning systems 13.2.1, 13.2.2, A.13.2.1, A.13.2.2
Ejectors (definition) 3.3.28, A.3.3.28
Electrical systems and devices ....*see also* Lights and lighting systems; Low-voltage circuit, equipment, or system; Optical warning devices; Sirens
Batteries .....*see* Batteries
Contractor, data required of 4.17.1
Protection of 4.8, 8.1.2, A.4.8.1
Pump engines 10.8, A.10.8.3
Starting devices 6.5, 6.6, 10.9
Winches 15.4, A.15.4.1.1
Electric sirens (electromechanical) 6.9.2, 6.9.3, A.6.9.2
Definition 3.3.29, A.3.3.29
Electronic fuel control systems 5.2.1.1, 10.2.1, A.5.2.1.1, A.10.2.1
Electronic sirens 6.9.2, 6.9.3, A.6.9.2
Definition 3.3.30, A.3.3.30
Emergency vehicle (definition) 3.3.31
Enclosed compartment
Battery compartment 6.4.4.3, A.6.4.4.3
Definition 3.3.32
Engine enclosures, access to 16.1.3, 16.2.4
Engine governors 5.2.1.1, A.5.2.1.1
Equipment ..... Chap. 12
Access to 16.1.3
Containment 8.2, A.8.2
Hose .....*see* Hose
Miscellaneous equipment 5.1.2
Definition 3.3.58
Miscellaneous equipment allowance 5.1.2
Definition 3.3.59
Storage ..... 8.2 to 8.5, 12.2.2, A.8.2 to A.8.5.5
In crew compartment 7.1.10, 7.1.11, A.7.1.10.1
Weight allowance ..... 5.1.2, A.5.1.2(4)
Weights and dimensions for common equipment, worksheet for ..... Annex C
Equivalency to standard 1.5
Estimated in-service weight ..... 5.1.1 to 5.1.3, A.5.1.2(4)
Definition 3.3.33
Exhaust systems, engine 5.2.5, 10.6, A.5.2.5, A.10.6.2
Expansion ratio (definition) 3.3.34
Extinguishers, portable fire ..... 12.2.1, A.12.2.1(1)

-F-

Final stage manufacturer 5.1.4, A.5.1.4
Definition 3.3.35
Fire hose .....*see* Hose
First line and reserve apparatus, guidelines for ..... Annex D
Flowmeters 12.7, 13.5
FMVSS (definition) 3.3.36
Foam A.13.1
Definition 3.3.37
Foam concentrate
Compatibility of ..... 13.6.10.2, 13.9.3(5), A.13.6.10.2
Definition 3.3.38
Foam concentrate pumps 13.7, A.13.7
Foam proportioner 9.6.12, A.9.6.12
Definition 3.3.39
Foam proportioning system (definition) .... 3.3.40; *see also* Automatic regulating proportioning system; Class A foam concentrate proportioning systems
Foam solution
Definition 3.3.41
Pump recirculation line and 9.6.6.2
Fuel systems ..... 5.2.4, 10.5, A.5.2.4.1.1.1 to A.5.2.4.2.1.3, A.10.5.1.1.1 to A.10.5.1.3.1
Fuel tanks
Pump engine 10.10, A.10.10
Vehicle engine 5.3.4, A.5.3.4.1
Fully enclosed personnel area (definition) ..... 3.3.42; *see also* Crew area; Driving area

-G-

Gallon (definition) 3.3.43
Gasoline engines 5.2.4.2, 10.5.2, A.5.2.4.2.1.1, A.5.2.4.2.1.3
Gauge pressure 14.2.2.1
Definition 3.3.45
Gauges 13.5
Analog pressure
Class A foam systems 13.5.2
Compressed air foam systems 14.7.2
Compound 9.8.1
Definition 3.3.19, A.3.3.19
Definition 3.3.44

Copyright National Fire Protection Association
Provided by IHS under license with NFPA
No reproduction or networking permitted without license from IHS
Not for Resale

For driver 7.3.4.1, A.7.3.4.1
Illumination of 4.7.1
Location of 4.7.3
Pump 9.7.1, 9.7.2, 9.8, A.9.8.2
GAWR (gross axle weight rating) 4.9.3.2, 4.15, 4.17.1, 5.1, A.4.15, A.5.1
Definition 3.3.46, A.3.3.46
Governor, engine 10.2.1, A.10.2.1
Grades
Definition 3.3.47, A.3.3.47
Vehicle performance on ..... 4.10.2, 4.11.1(3), 4.11.2, A.4.10.2, A.4.11.1(3), A.4.11.2
Gravity, center of 4.9.1, A.4.9.1
Definition 3.3.15
Grille guards 16.2
Ground clearance 5.3.2.2, A.5.3.2.2
Definition 3.3.48
Guards 4.6.1, 16.2, A.4.6.1
GVWR (gross vehicle weight rating) 4.9.1, 4.9.3.2, 4.15, 4.17.1, 5.1, A.4.9.3.1, A.4.15, A.5.1
Definition 3.3.49, A.3.3.49

-H-

Hose 9.11.2.2.3
Flush lines, foam concentrate supply 13.3.10
Hydraulic 4.8, 15.5.1, A.4.8.1
Preconnected hose lines (definition) 3.3.73, A.3.3.73
Storage ..... 8.9, 9.6.7, A.8.9.1 to A.8.9.8
Suction ..... *see* Suction hose
Supply hose, foam concentrate 13.3.6, 13.3.9
Hose threads ..... *see* National hose thread (NH); NPSH
Hydraulic lines 4.8, 15.5.1, A.4.8.1
Hydraulic winches 15.5, A.15.5

-I-

Indicators
Class A foam concentrate proportioning systems 13.5
Compressed air foam systems 12.7
For driver 7.3.4.1
Hydraulic winch operation 15.5.5.1, 15.5.5.2, A.15.5.5.1
In-line eductor system 13.9.3.1
Instructions 4.7, A.4.7.2
Class A foam proportioning systems 13.9
Compressed air foam systems 14.8
Instrumentation ..... *see also* Controls; Gauges
In driving compartment 7.3.4, A.7.3.4.1
Pump 9.7.1, 9.7.2, 9.8, A.9.8.2
Intake connections, pump ..... 9.5, A.9.5.1 to A.9.5.7.2
Size 9.5.1, A.9.5.1
Definition 3.3.50
Intake-side foam proportioning systems 13.2.3, A.13.2.3
Interlocks ..... 9.9.2 to 9.9.9, 15.5.5.3, A.9.9.2.1, A.9.9.3.1
Definition 3.3.51

-L-

Labels 4.7.2, A.4.7.2
Class A foam concentrate proportioning systems ..... 13.9, A.13.9.3(5)
Compressed air foam systems 14.8
Definition 3.3.52
Foam tanks 13.6.10, A.13.6.10.2
Pump 9.6.13, 9.8.4
Transmission 9.9.1.3
Legal requirements 4.4
Lights and lighting systems ..... 6.3.3, A.6.3.3(7)
Indicators ..... *see* Indicators
Obstruction of 16.1.4, 16.2.5
Stop, tail, and directional lights 6.12, 7.3.4.1
Work area 6.10, A.6.10
Lines
Hose ..... *see* Hose
Protection of 4.8, A.4.8.1
Low-voltage circuit, equipment, or system ... Chap. 6; *see also* Optical warning devices
Audible warning devices 6.9, A.6.9.2
Automatic electrical load management system 6.3.6, A.6.3.6.1
Definition 3.3.7
Backup alarm 6.11
Batteries 6.4, A.6.4
Definition 3.3.53
Documentation 6.14
Electrical system failure, warning device for 6.3.4, A.6.3.4
Electromagnetic interference suppression 6.7, A.6.7
Load management 6.3.6, A.6.3.6.1
Minimum continuous electrical load ..... *see* Minimum continuous electrical load
Performance tests 6.13, 6.14, A.6.13.1
Alternator performance test at full load 6.13.3.4
Alternator performance test at idle 6.13.3.3
Low-voltage alarm test 6.13.4
Reserve capacity tests 6.13.3.2
Power supply ..... 6.3, A.6.3.2 to A.6.3.6.1
Starting device 6.5, 6.6
Stop, tail, and directional lights 6.12
Temperature exposure 6.6
Wiring, electrical circuit feeder 6.2, A.6.2.1, A.6.2.6
Work lighting 6.10, A.6.10
Lubrication systems, engine 5.2.3, 10.4, A.5.2.3.1

-M-

Maintenance D.4
Manuals 4.12.4, 13.9.4, 14.8.4
Routine 4.12.1
Tools 4.12.2
Manually regulated foam proportioning system A.13.2.3, A.13.2.4
Definition 3.3.54
Manufacturer (definition) 3.3.55
Manufacturer certification of test results (for components) 4.5
Maximum pump close-off pressure 9.8.1.3
Definition 3.3.56, A.3.3.56
Means of escape 7.1.14
Measurement, units of 1.6, A.1.6
Metal finish, of body ..... 8.8, A.8.8.2 to A.8.8.3.2
Minimum continuous electrical load ... 6.3.2, 6.3.6, A.6.3.2, A.6.3.6.1
Battery, provided by 6.4.2
Definition 3.3.57
Documentation 6.14
Miscellaneous equipment 5.1.2
Definition 3.3.58
Miscellaneous equipment allowance 5.1.2
Definition 3.3.59
Momentary switch A.10.7.1
Definition 3.3.60
Motor vehicle laws and regulations 4.4

-N-

National hose thread (NH) 9.5.1.1, 9.6.2, A.9.5.1.1
Definition 3.3.61
Net pump pressure (definition) 3.3.62, A.3.3.62
Nozzle reaction (definition) 3.3.63
NPSH (national pipe straight hose thread) (definition) 3.3.64

-O-

Off-road use vehicles A.1.1, A.4.11.2, A.5.1
Definition 3.3.65, A.3.3.65
Operator's panel ..... 15.5.5.3; *see also* Pump operator's panel
Definition 3.3.66
Driving compartment 7.3.4, A.7.3.4.1

Copyright National Fire Protection Association
Provided by IHS under license with NFPA
No reproduction or networking permitted without license from IHS
Not for Resale

Optical center 6.8.13, 6.8.14, 6.8.15.2.4, 6.8.15.2.5, A.6.8.13, A.6.8.14
Definition 3.3.67
Optical power 6.8.13.5, 6.8.14.4, 6.18.15.2.3, A.6.8.13.5
Definition 3.3.68
Optical source 6.8.10, 6.8.15.2.2, 6.8.15.2.4, 6.8.15.2.5.1, 6.9.15.2.5.2
Definition 3.3.69, A.3.3.69
Flash rate 6.8.11, A.6.8.11
Optical warning devices ... 6.3.3, 6.4.6, 6.8, A.6.3.3(7), A.6.4.6, A.6.8
Certification 6.8.16, A.6.8.16
Color of warning lights 6.8.12
Definition 3.3.70
Documentation 6.8.16, A.6.8.16
Electrical system failure 6.3.4, A.6.3.4
Large apparatus, requirements for 6.8.13, A.6.8.13
Lower-level 6.8.13.3, 6.8.14.3
Midship 6.8.13.4
Small apparatus, requirements for 6.8.14, A.6.8.14
Tests 6.8.15
Upper-level 6.8.13.2, 6.8.14.2

-P-

Painting of surfaces ..... 8.8, A.8.8.2 to A.8.8.3.2
Performance requirements
Apparatus ..... 4.10, 4.11, A.4.10.1 to A.4.10.3, A.4.11.1(2) to A.4.11.3
Pumps 9.1
Personal equipment weight 5.1.2
Definition 3.3.71
Personnel .....*see also* Crew area; Driving area
Protection of 4.6, A.4.6.1
Weight of ..... 5.1.2(4), A.5.1.2(4)
Plates 4.7.1, 4.7.2, 5.1.5, A.4.7.2, A.5.1.5.1
Alternator, rating of 6.14
Class A foam concentrate proportioning systems ..... 13.4.3, 13.9, A.13.9.3(5)
Compressed air foam systems (CAFS) 14.8
Definition 3.3.72
Lubrication systems 5.2.3.3
Plumbing access 8.5, A.8.5.5
Powered equipment racks 8.3
Power supply
Class A foam concentrate proportioning systems 13.3.3
Electric powered winches 15.4.2
Vehicle electrical system ..... 6.3, A.6.3.2 to A.6.3.6.1
Power takeoff (PTO) .....*see* PTOs
Power train ..... 5.3.3, A.5.3.3.1 to A.5.3.3.3; *see also* Transmission
Preconnected hose lines (definition) 3.3.73, A.3.3.73
Pressure control systems, pump 9.9.13, A.9.9.13
Pressure indicating devices 7.3.4.1, 12.7
Pressure vessel tanks 13.8
Priming devices 9.3, A.9.3.1, A.9.3.2.1
Procuring wildland fire apparatus .....*see* Specifying and procuring wildland fire apparatus
Protection systems, vehicle ..... Chap. 16
PTOs ..... 5.2.1.3, 9.9.2 to 9.9.9, A.9.9.2.1, A.9.9.3.1
Definition 3.3.74
Split shaft 9.9.1.4
Definition 3.3.87
Pump and roll 9.9.6, 9.9.7, 9.10, A.9.10
Pump engines ..... Chap. 10
Air system ..... 10.5, A.10.5.1.1.1 to A.10.5.1.3.1
Batteries 10.8.2
Controls 10.7, A.10.7.1
Cooling system 10.3
Diesel ..... 10.5.1, A.10.5.1.1.1 to A.10.5.1.3.1
Electrical systems and devices 10.8, A.10.8.3
Engine and engine system design 10.2, A.10.2.1, A.10.2.2
Exhaust system 10.6, A.10.6.2
Fuel and fuel system ..... 10.5, 10.10, A.10.5.1.1.1 to A.10.5.1.3.1, A.10.10
Gasoline 10.5.2
Lubrication system 10.4
Shutdown 10.2.2, A.10.2.2
Speed control 10.2.1, A.10.2.1
Starting devices 10.9
Pump operator's panel 9.9.11
Definition 3.3.75
Pump operator's position 9.7, 10.7.1, 13.4.1, 13.5.1, 14.6.1, 14.7.1, A.10.7.1, A.13.4.1
Definition 3.3.76
Pumps ..... 6.3.3, Chap. 9, A.6.3.3(7); *see also* Pump engines
Access 8.5, A.8.5.5
Auxiliary engine-driven 4.17.1
Definition 3.3.10
Compressed air foam system water supply 14.2.4, A.14.2.4
Construction requirements 9.4, A.9.4
Contractor, data required of 4.17.1
Controls 9.7, 9.9, A.9.9
Corrosion-resistant (bronze) 9.4.3, A.9.4.3
Discharge ..... 9.6, A.9.6.1 to A.9.6.12
Foam concentrate 13.7, A.13.7
Gauges and instruments 9.7.1, 9.7.2, 9.8, A.9.8.2
Intake connections ..... 9.5, A.9.5.1 to A.9.5.7.2
Net pump pressure .....*see* Net pump pressure
Performance requirements 9.1
Power train capability 5.3.3.2.1, 5.3.3.2.2, A.5.3.3.2.1
Priming 9.3, 9.11.3, A.9.3.1, A.9.3.2.1
Pumping suction capability 9.2, A.9.2
Rated capacity (water pump) ..... 9.1.1 to 9.1.7, 9.2, A.9.2
Definition 3.3.81
Tests ..... 9.11, A.9.11.1.3 to A.9.11.2.3.5
Piping integrity 9.11.6
Priming system 9.11.3
Vacuum test 9.11.4
Water tank-to-pump flow test 9.11.5
Vacuum 9.3.3
Purchasers (definition) ..... 3.3.77; *see also* Specifying and procuring wildland fire apparatus
Purchasing authority (definition) 3.3.78
Purpose of standard 1.2

-Q-

Qualified person (definition) 3.3.79

-R-

Radio ..... 6.3.3, A.6.3.3(7)
Ramp breakover angle 4.3.1.1, A.5.3.2.2
Definition 3.3.80
Rated capacity (water pump) ..... 9.1.1 to 9.1.7, 9.2, A.9.2
Definition 3.3.81
Readily accessible (definition) 3.3.82
Receivers, rope/winch 8.10, A.8.10
References ..... Chap. 2, Annex E
Refurbishing of apparatus D.5
Replacement apparatus D.5
Reserve apparatus, guidelines for ..... Annex D
Reserve capacity 6.4.2
Definition 3.3.83
Responsibility of purchaser ... 4.2, A.4.2.1, A.4.2.2; *see also* Specifying and procuring wildland fire apparatus
Retroactivity of standard 1.4, A.1.4
Roadability ..... 4.11, A.4.11.1(2) to A.4.11.3
Road tests 4.13
Rope, receivers and anchors for 8.10, A.8.10

-S-

SCBA units 7.1.9.3.1, 7.1.9.3.2, 7.1.10, A.7.1.10.1, A.7.3.3
Storage 8.4, A.8.4

Copyright National Fire Protection Association
Provided by IHS under license with NFPA
No reproduction or networking permitted without license from IHS
Not for Resale

Scope of standard 1.1, A.1.1
Seat
Arrangement 7.1.9
Head height 7.1.8, A.7.1.8.1
Self-educting master stream nozzle 13.2.2, A.13.2.2
Serviceability of apparatus 4.12
Shall (definition) 3.2.3
Shields 4.6.1, A.4.6.1
Should (definition) 3.2.4
Shutdown systems, engine 5.2.1.2, 10.2.2, A.5.2.1.2, A.10.2.2
Signs 4.7.2, A.4.7.2
Definition 3.3.84
Sirens 6.9.2, 6.9.3, 7.3.4.1, A.6.9.2
Skid plates 16.3, A.16.3
Slip-on fire-fighting module 1.1, 8.11, A.8.11.4.4, A.11.4.2
Definition 3.3.85, A.3.3.85
Slip resistance 8.6.3, A.8.6.3
Slow-operating valve 9.5.2
Definition 3.3.86
Specifying and procuring wildland fire apparatus ..... Annex B
Acceptance B.5
Awarding contract B.4
Obtaining and studying proposals B.3
Writing specifications B.2
Speed control 5.2.1.1, 5.2.1.4, 10.2.1, A.5.2.1.1, A.5.2.1.4.1, A.5.2.1.4.2, A.10.2.1
Split shaft PTOs 9.9.1.4, 9.9.2, 9.9.3, A.9.9.2.1, A.9.9.3.1
Definition 3.3.87
Standard cubic feet per minute (SCFM) (definition) 3.3.88
Starting devices, engine 6.5, 6.6, 10.9
Steering mechanisms 5.3.2.5
Stepping surfaces ..... 7.1.12, 8.6, A.8.6.1 to A.8.6.3
Storage
Equipment .....*see* Equipment
Hose ..... 8.9, A.8.9.1 to A.8.9.8
Strainer 9.2, 9.5.7, 9.11.2.2.2, 12.1, A.9.2, A.9.5.7.2, A.12.1
Suction hose 7.5.1.3, 9.2, 9.3.1, 9.11.2.2.1, 9.11.2.2.2, 12.1, A.9.2, A.9.3.1, A.12.1
Suction lift (definition) 3.3.89
Sump (definition) 3.3.90
Supply hose, foam concentrate 13.3.6, 13.3.9
Suspension, vehicle ..... 5.3.2, A.5.3.2.1 to A.5.3.2.3
Swash partitions 11.2.5, 13.6.2, A.11.2.5
Definition 3.3.91
Switch, momentary A.10.7.1
Definition 3.3.60

-T-

Tanks
Compressed air 14.3.4
Foam concentrate 13.3.7
Atmospheric foam concentrate ..... 13.6, A.13.6.3.2 to A.13.6.10.2
Labels 13.6.10, A.13.6.10.2
Tank drain 13.6.7
Fuel 5.3.4, 10.10, A.5.3.4.1, A.10.10
Hydraulic 15.5.3
Pressure vessel 13.8
Water .....*see* Water tanks
Tests
Acceptance 4.14, A.4.14
Batteries 6.4.4.1
Class A foam proportioning systems ..... 13.11, A.13.11.1(2), A.13.11.1(3)
Compressed air foam systems 14.9, A.14.9
On delivery 4.14, A.4.14
Electrical systems and devices, performance tests 6.13, 6.14, A.6.13.1
Optical warning devices 6.8.15
Pump .....*see* Pumps
Road 4.13
Water tanks 9.11.5
Tires ..... 5.3.2, A.5.3.2.1 to A.5.3.2.3
Tools, availability of 4.12.2
Tow hooks 5.3.5
Transmission
Pump operation ..... 9.9.1.3 to 9.9.1.5, 9.9.2 to 9.9.11, 9.11.2.3.5, A.9.9.2.1, A.9.9.3.1, A.9.11.2.3.5
Vehicle ..... 5.2.1.3, 5.3.3.1, 6.3.3, 15.5.5.2, A.5.3.3.1, A.6.3.3(7)
Turning clearance radius 4.3.1.1
Definition 3.3.92

-U-

Units of measure 1.6, A.1.6

-V-

Valve, slow-operating .....*see* Slow-operating valve
Vehicle engines ..... 5.2, 9.11.2.3.5, A.5.2.1.1 to A.5.2.5, A.9.11.2.3.5
Air system ..... 5.2.4, A.5.2.4.1.1.1 to A.5.2.4.2.1.3
Cooling systems 5.2.2, A.5.2.2.1
Exhaust systems 5.2.5, A.5.2.5
Fuel and fuel systems ..... 5.2.4, 5.3.4, A.5.2.4.1.1.1 to A.5.2.4.2.1.3, A.5.3.4.1
Gasoline .....*see* Gasoline engines
Lubrication system 5.2.3, A.5.2.3.1
Pump and roll 9.10, A.9.10
Shutdown systems 5.2.1.2, A.5.2.1.2
Speed control 5.2.1.1, 5.2.1.4, A.5.2.1.1, A.5.2.1.4.1, A.5.2.1.4.2
System design ..... 5.2, A.5.2.1.1 to A.5.2.5
Vehicles
Carrying capacity 5.1, A.5.1
Components ..... 5.3.3, A.5.3.3.1 to A.5.3.3.3
Engines .....*see* Vehicle engines
Off-road use .....*see* Off-road use vehicles
Protection systems ..... Chap. 16
Stability of ..... 4.9, A.4.9.1 to A.4.9.3.3
Vehicle stability
Load distribution 4.9.3, A.4.9.3.1, A.4.9.3.3
Weight distribution 4.9.2, A.4.9.2.1

-W-

Warning devices ..... 6.3.3, 7.3.4.1, A.6.3.3(7)
Audible ..... 6.9, A.6.9.2; *see also* Sirens
Back-up alarm 6.11
Definition 3.3.11
Electrical system failure 6.3.4, A.6.3.4
Optical .....*see* Optical warning devices
Stop, tail, and directional lights 6.12
Water tanks ..... Chap. 11
Capacity certification 11.5, A.11.5
Construction ..... 11.2, A.11.2.3 to A.11.2.5
Contractor, data required of 4.17.1
Filling and venting ..... 11.4, A.11.4.1.4 to A.11.4.3.2
Size 5.1.2, 11.1, 11.5, A.5.1, A.11.5
Tank-to-pump intake line 11.3
Tests 9.11.5, 9.11.7
Wheels ..... 5.3.2, A.5.3.2.1 to A.5.3.2.3
Chocks ..... 12.2.1(1), A.12.2.1(1)
Wildland fire apparatus (definition) 3.3.93
Winches ..... 8.10, Chap. 15, A.8.10

Copyright National Fire Protection Association
Provided by IHS under license with NFPA
No reproduction or networking permitted without license from IHS
Not for Resale

Sequence of Events Leading to Issuance of an NFPA Committee Document

Step 1: Call for Proposals

- Proposed new Document or new edition of an existing Document is entered into one of two yearly revision cycles, and a Call for Proposals is published.

Step 2: Report on Proposals (ROP)

- Committee meets to act on Proposals, to develop its own Proposals, and to prepare its Report.
- Committee votes by written ballot on Proposals. If two-thirds approve, Report goes forward. Lacking two-thirds approval, Report returns to Committee.
- Report on Proposals (ROP) is published for public review and comment.

Step 3: Report on Comments (ROC)

- Committee meets to act on Public Comments to develop its own Comments, and to prepare its report.
- Committee votes by written ballot on Comments. If two-thirds approve, Report goes forward. Lacking two-thirds approval, Report returns to Committee.
- Report on Comments (ROC) is published for public review.

Step 4: Technical Report Session

- "*Notices of intent to make a motion"* are filed, are reviewed, and valid motions are certified for presentation at the Technical Report Session. ("Consent Documents" that have no certified motions bypass the Technical Report Session and proceed to the Standards Council for issuance.)
- NFPA membership meets each June at the Annual Meeting Technical Report Session and acts on Technical Committee Reports (ROP and ROC) for Documents with "certified amending motions."
- Committee(s) vote on any amendments to Report approved at NFPA Annual Membership Meeting.

Step 5: Standards Council Issuance

- Notification of intent to file an appeal to the Standards Council on Association action must be filed within 20 days of the NFPA Annual Membership Meeting.
- Standards Council decides, based on all evidence, whether or not to issue Document or to take other action, including hearing any appeals.

Committee Membership Classifications

The following classifications apply to Technical Committee members and represent their principal interest in the activity of the committee.

M *Manufacturer:* A representative of a maker or marketer of a product, assembly, or system, or portion thereof, that is affected by the standard.

U *User:* A representative of an entity that is subject to the provisions of the standard or that voluntarily uses the standard.

I/M *Installer/Maintainer:* A representative of an entity that is in the business of installing or maintaining a product, assembly, or system affected by the standard.

L *Labor:* A labor representative or employee concerned with safety in the workplace.

R/T *Applied Research/Testing Laboratory:* A representative of an independent testing laboratory or independent applied research organization that promulgates and/or enforces standards.

E *Enforcing Authority:* A representative of an agency or an organization that promulgates and/or enforces standards.

I *Insurance:* A representative of an insurance company, broker, agent, bureau, or inspection agency.

C *Consumer:* A person who is, or represents, the ultimate purchaser of a product, system, or service affected by the standard, but who is not included in the *User* classification.

SE *Special Expert:* A person not representing any of the previous classifications, but who has a special expertise in the scope of the standard or portion thereof.

NOTES;
1. "Standard" connotes code, standard, recommended practice, or guide.
2. A representative includes an employee.
3. While these classifications will be used by the Standards Council to achieve a balance for Technical Committees, the Standards Council may determine that new classifications of members or unique interests need representation in order to foster the best possible committee deliberations on any project. In this connection, the Standards Council may make appointments as it deems appropriate in the public interest, such as the classification of "Utilities" in the National Electrical Code Committee.
4. Representatives of subsidiaries of any group are generally considered to have the same classification as the parent organization.

Copyright National Fire Protection Association
Provided by IHS under license with NFPA
No reproduction or networking permitted without license from IHS
Not for Resale

NFPA Technical Committee Document Proposal Form

Note: All proposals must be received by 5:00 p.m. EST/EDST on the published proposal closing date.

For further information on the standards-making process, please contact Codes and Standards Administration at 617-984-7249. For technical assistance, please call NFPA at 617-770-3000.

FOR OFFICE USE ONLY
Log #: _____
Date Rec'd: _____

Please indicate in which format you wish to receive your ROP/ROC: ☐ **CD ROM** ☐ **paper** ☐ **download**
(Note: In choosing the download option you intend to view the ROP/ROC from our Website. No copy will be sent to you.)

Date 12/18/02 **Name** John B. Smith **Telephone** 617-555-1212
Company _____
Address 9 Seattle St. **City** Seattle **State** WA **Zip** 02255
Please indicate organization represented (if any) Fire Marshals Assn. of North America

1. **a) NFPA Document Title** National Fire Alarm Code
   b) NFPA No. & Edition NFPA 72, 2002 ed. **c) Section/Paragraph** 4.4.7.1.1

2. **Proposal Recommends:** *(check one)* ☐ **new text** ☐ **revised text** ☒ **deleted text**

3. **Proposal.** *(Include proposed new or revised wording, or identification of wording to be deleted.)* Note: Proposed text should be in legislative format, that is, use underscore to denote wording to be inserted (inserted wording) and strike-through to denote wording to be deleted (~~deleted wording~~). Delete exception.

4. **Statement of Problem and Substantiation for Proposal.** Note: State the problem that will be resolved by your recommendation. Give the specific reason for your proposal including copies of tests, research papers, fire experience, etc. If more than 200 words, it may be abstracted for publication. A properly installed and maintained system should be free of ground faults. The occurrence of one or more ground faults should be required to cause a "trouble" signal because it indicates a condition that could contribute to future malfunction of the system. Ground fault protection has been widely available on these systems for years and its cost is negligible. Requiring it on all systems will promote better installations, maintenance and reliability.

5. ☒ **This Proposal is Original Material.** Note: Original material is considered to be the submitter's own idea based on or as a result of his/her own experience, thought, or research and, to the best of his/her knowledge, is not copied from another source.

   ☐ **This Proposal is Not Original Material; Its Source** ***(if known)*** **is as Follows:** _____

Sample

I hereby grant the NFPA all and full rights in copyright to this proposal, and I understand that I acquire no rights in any publication of NFPA in which this proposal in this or another similar or analogous form is used.

Signature ***(Required)*** John B. Smith

PLEASE USE SEPARATE FORM FOR EACH PROPOSAL • NFPA FAX (617) 770-3500

Mail to: Secretary, Standards Council • NFPA • 1 Batterymarch Park • PO Box 9101 • Quincy, MA 02269-9101

Copyright National Fire Protection Association
Provided by IHS under license with NFPA
No reproduction or networking permitted without license from IHS
Not for Resale

NFPA Technical Committee Document Proposal Form

Note: All proposals must be received by 5:00 p.m. EST/EDST on the published proposal closing date.

For further information on the standards-making process, please contact Codes and Standards Administration at 617-984-7249. For technical assistance, please call NFPA at 617-770-3000.

FOR OFFICE USE ONLY
Log #: _____
Date Rec'd: _____

Please indicate in which format you wish to receive your ROP/ROC: ☐ **CD ROM** ☐ **paper** ☐ **download**
(Note: In choosing the download option you intend to view the ROP/ROC from our Website. No copy will be sent to you.)

Date _____ **Name** _____ **Telephone** _____

Company _____

Address _____ **City** _____ **State** _____ **Zip** _____

Please indicate organization represented (if any) _____

1. **a) NFPA Document Title** _____
   b) NFPA No. & Edition _____ **c) Section/Paragraph** _____

2. **Proposal Recommends:** *(check one)* ☐ **new text** ☐ **revised text** ☐ **deleted text**

3. **Proposal.** *(Include proposed new or revised wording, or identification of wording to be deleted.)* Note: Proposed text should be in legislative format, that is, use underscore to denote wording to be inserted (inserted wording) and strike-through to denote wording to be deleted (~~deleted wording~~). _____

4. **Statement of Problem and Substantiation for Proposal.** Note: State the problem that will be resolved by your recommendation. Give the specific reason for your proposal including copies of tests, research papers, fire experience, etc. If more than 200 words, it may be abstracted for publication. _____

5. ☐ **This Proposal is Original Material.** Note: Original material is considered to be the submitter's own idea based on or as a result of his/her own experience, thought, or research and, to the best of his/her knowledge, is not copied from another source.

   ☐ **This Proposal is Not Original Material; Its Source *(if known)* is as Follows:** _____

I hereby grant the NFPA all and full rights in copyright to this proposal, and I understand that I acquire no rights in any publication of NFPA in which this proposal in this or another similar or analogous form is used.

Signature *(Required)* _____

PLEASE USE SEPARATE FORM FOR EACH PROPOSAL • NFPA FAX (617) 770-3500

Mail to: Secretary, Standards Council • NFPA • 1 Batterymarch Park • PO Box 9101 • Quincy, MA 02269-9101

Copyright National Fire Protection Association
Provided by IHS under license with NFPA
No reproduction or networking permitted without license from IHS
Not for Resale