Tentative Interim Amendment

NFPA 1901

Standard for Automotive Fire Apparatus

2003 Edition

Reference: 15.10.7 and A.15.10.7
TIA 03-1(NFPA 1901)
(SC-05-10-15/Log 828)

Pursuant to Section 5 of the NFPA Regulations Governing Committee Projects, the National Fire Protection Association has issued the following Tentative Interim Amendment to NFPA 1901, *Standard for Automotive Fire Apparatus*, 2003 edition. The TIA was processed by the Fire Department Apparatus Committee, and was issued by the Standards Council on October 27, 2005, with an effective date of November 18, 2005.

A Tentative Interim Amendment is tentative because it has not been processed through the entire standards-making procedures. It is interim because it is effective only between editions of the standard. A TIA automatically becomes a proposal of the proponent for the next edition of the standard; as such, it then is subject to all of the procedures of the standards-making process

1. Add a new 15.10.7 to read as follows:

15.10.7* Any hose storage area shall be equipped with a positive means to prevent unintentional deployment of the hose from the top, sides, front, and rear of the hose storage area while the apparatus is underway in normal operations.

2. Add a new annex paragraph to 15.10.7 to read as follows:

A.15.10.7 Many fire departments have experienced fire hose inadvertently coming off fire apparatus while traveling to and from incidents. Several incidents have resulted in personal injury and damage to property. At least one death is directly attributable to an unintentional deployment of fire hose during a response. It is imperative that the fire apparatus manufacturer provide and the fire department use a means to assure this does not occur.

Fire departments and manufacturers have developed various methods of preventing inadvertent deployment of fire hose including: fully enclosed hose beds covers, buckled straps, hook and loop straps, fabric covers, webbing mesh, wind deflectors, and other material restraints or combination of restraints. It is also important that fire departments develop methods of storing hose connected nozzles and appliances in a manner that does not promote the inadvertent deployment of the hose, nozzle or appliance.

Copyright © 2005 All Rights Reserved
NATIONAL FIRE PROTECTION ASSOCIATION

Copyright National Fire Protection Association
Provided by IHS under license with NFPA
No reproduction or networking permitted without license from IHS
Not for Resale

NFPA 1901

Standard for Automotive Fire Apparatus

2003 Edition

NFPA, 1 Batterymarch Park, PO Box 9101, Quincy, MA 02269-9101
An International Codes and Standards Organization

NFPA License Agreement

This document is copyrighted by the National Fire Protection Association (NFPA), 1 Batterymarch Park, Quincy, MA 02269-9101 USA.
All rights reserved.

NFPA grants you a license as follows: The right to download an electronic file of this NFPA document for temporary storage on one computer for purposes of viewing and/or printing one copy of the NFPA document for individual use. Neither the electronic file nor the hard copy print may be reproduced in any way. In addition, the electronic file may not be distributed elsewhere over computer networks or otherwise. The hard copy print may only be used personally or distributed to other employees for their internal use within your organization.

--`,,```,,,,````-`-`,,`,,`,`,,`---

Copyright National Fire Protection Association
Provided by IHS under license with NFPA
No reproduction or networking permitted without license from IHS

Not for Resale

IMPORTANT NOTICES AND DISCLAIMERS CONCERNING NFPA DOCUMENTS

NOTICE AND DISCLAIMER OF LIABILITY CONCERNING THE USE OF NFPA DOCUMENTS

NFPA codes, standards, recommended practices, and guides, of which the document contained herein is one, are developed through a consensus standards development process approved by the American National Standards Institute. This process brings together volunteers representing varied viewpoints and interests to achieve consensus on fire and other safety issues. While the NFPA administers the process and establishes rules to promote fairness in the development of consensus, it does not independently test, evaluate, or verify the accuracy of any information or the soundness of any judgments contained in its codes and standards.

The NFPA disclaims liability for any personal injury, property or other damages of any nature whatsoever, whether special, indirect, consequential or compensatory, directly or indirectly resulting from the publication, use of, or reliance on this document. The NFPA also makes no guaranty or warranty as to the accuracy or completeness of any information published herein.

In issuing and making this document available, the NFPA is not undertaking to render professional or other services for or on behalf of any person or entity. Nor is the NFPA undertaking to perform any duty owed by any person or entity to someone else. Anyone using this document should rely on his or her own independent judgment or, as appropriate, seek the advice of a competent professional in determining the exercise of reasonable care in any given circumstances.

The NFPA has no power, nor does it undertake, to police or enforce compliance with the contents of this document. Nor does the NFPA list, certify, test or inspect products, designs, or installations for compliance with this document. Any certification or other statement of compliance with the requirements of this document shall not be attributable to the NFPA and is solely the responsibility of the certifier or maker of the statement.

--`,,```,,,,````-`-`,,`,,`,`,,`---

Copyright National Fire Protection Association
Provided by IHS under license with NFPA
No reproduction or networking permitted without license from IHS

Not for Resale

ADDITIONAL NOTICES AND DISCLAIMERS

Updating of NFPA Documents

Users of NFPA codes, standards, recommended practices, and guides should be aware that these documents may be superseded at any time by the issuance of new editions or may be amended from time to time through the issuance of Tentative Interim Amendments. An official NFPA document at any point in time consists of the current edition of the document together with any Tentative Interim Amendments and any Errata then in effect. In order to determine whether a given document is the current edition and whether it has been amended through the issuance of Tentative Interim Amendments or corrected through the issuance of Errata, consult appropriate NFPA publications such as the National Fire Codes® Subscription Service, visit the NFPA website at www.nfpa.org, or contact the NFPA at the address listed below.

Interpretations of NFPA Documents

A statement, written or oral, that is not processed in accordance with Section 6 of the Regulations Governing Committee Projects shall not be considered the official position of NFPA or any of its Committees and shall not be considered to be, nor be relied upon as, a Formal Interpretation.

Patents

The NFPA does not take any position with respect to the validity of any patent rights asserted in connection with any items which are mentioned in or are the subject of NFPA codes, standards, recommended practices, and guides, and the NFPA disclaims liability for the infringement of any patent resulting from the use of or reliance on these documents. Users of these documents are expressly advised that determination of the validity of any such patent rights, and the risk of infringement of such rights, is entirely their own responsibility.

NFPA adheres to applicable policies of the American National Standards Institute with respect to patents. For further information contact the NFPA at the address listed below.

Law and Regulations

Users of these documents should consult applicable federal, state, and local laws and regulations. NFPA does not, by the publication of its codes, standards, recommended practices, and guides, intend to urge action that is not in compliance with applicable laws, and these documents may not be construed as doing so.

Copyrights

This document is copyrighted by the NFPA. It is made available for a wide variety of both public and private uses. These include both use, by reference, in laws and regulations, and use in private self-regulation, standardization, and the promotion of safe practices and methods. By making this document available for use and adoption by public authorities and private users, the NFPA does not waive any rights in copyright to this document.

Use of NFPA documents for regulatory purposes should be accomplished through adoption by reference. The term "adoption by reference" means the citing of title, edition, and publishing information only. Any deletions, additions, and changes desired by the adopting authority should be noted separately in the adopting instrument. In order to assist NFPA in following the uses made of its documents, adopting authorities are requested to notify the NFPA (Attention: Secretary, Standards Council) in writing of such use. For technical assistance and questions concerning adoption of NFPA documents, contact NFPA at the address below.

For Further Information

All questions or other communications relating to NFPA codes, standards, recommended practices, and guides and all requests for information on NFPA procedures governing its codes and standards development process, including information on the procedures for requesting Formal Interpretations, for proposing Tentative Interim Amendments, and for proposing revisions to NFPA documents during regular revision cycles, should be sent to NFPA headquarters, addressed to the attention of the Secretary, Standards Council, NFPA, 1 Batterymarch Park, P.O. Box 9101, Quincy, MA 02269-9101.

For more information about NFPA, visit the NFPA website at www.nfpa.org.

Copyright National Fire Protection Association
Provided by IHS under license with NFPA
No reproduction or networking permitted without license from IHS
Not for Resale

Copyright © 2003, National Fire Protection Association, All Rights Reserved

NFPA 1901

Standard for

Automotive Fire Apparatus

2003 Edition

This edition of NFPA 1901, *Standard for Automotive Fire Apparatus*, was prepared by the Technical Committee on Fire Department Apparatus and acted on by NFPA at its May Association Technical Meeting held May 18–21, 2003, in Dallas, TX. It was issued by the Standards Council on July 18, 2003, with an effective date of August 7, 2003, and supersedes all previous editions.

This edition of NFPA 1901 was approved as an American National Standard on July 18, 2003.

Origin and Development of NFPA 1901

The 2003 edition of NFPA 1901 is a general update of the 1999 edition. The standard has been reorganized according to the NFPA *Manual of Style* and text added to clarify requirements. All metric values have been reviewed and revised where necessary to provide a complete set of metric values to which a piece of fire apparatus could be built. Requirements have been added that third parties and manufacturers must meet when certifying test results.

The requirements for head height at seating positions have been modified as has the requirement for storage of SCBAs in seat backs, both aimed at reducing firefighter injuries. The requirement for slip resistance of standing and walking surfaces has been expanded to allow another method of measurement, and the test protocol has been better defined. There has been a general cleanup of the chapter on line voltage systems, including modifying requirements, to ensure that the requirements stated on the power source specification label could be met on a continuous basis. New requirements have been added for receivers and anchors for rope and removable winches.

The chapter on transfer pumps has been deleted, and a new chapter on industrial supply pumps added. More specific rating points have been established for auxiliary pumps. The rung spacing on aerial ladders has been modified to allow other spacing to be used, and a performance requirement has been established for wheel chocks. The discussion on developing specifications and procuring fire apparatus has been moved to Annex B and material added to assist the purchaser in evaluating the delivered fire apparatus. A new Annex C has been added showing the dimensions and weight of most equipment carried on fire apparatus, to help purchasers determine the amount of storage space and the weight allowance needed for such equipment. A new Annex D has been added to discuss guidelines for first line and reserve fire apparatus.

See Annex E for a more complete history of the standard.

Copyright National Fire Protection Association
Provided by IHS under license with NFPA
No reproduction or networking permitted without license from IHS
Not for Resale

Technical Committee on Fire Department Apparatus

Jeffrey Bowman, *Chair*
San Diego Fire Department, CA [E]

Kenneth L. Koch, *Secretary*
Sutphen Corporation, OH [M]

William Ballantyne, Hypro Corporation, MN [M]
Rep. Fire Apparatus Manufacturers Association
Robert J. Barraclough, Plano, TX [SE]
Gene P. Carlson, VFIS/Glatfelter Insurance Group, PA [I]
Rep. Volunteer Firemen's Insurance Services, Inc.
Peter F. Darley, W. S. Darley & Company, IL [M]
Rep. National Truck Equipment Association
Donald L. Frazeur, Los Angeles Fire Department, CA [U]
Ron W. French, JDK Management Inc., IL [SE]
Gordon L. Gholson, State of California, CA [U]
Gary Handwerk, Hale Products Inc., PA [M]
Tom Hillenbrand, Underwriters Laboratories Inc., IL [RT]
James J. Juneau, Juneau & Boll, P.L.L.C., TX [SE]
W. Kenneth Menke, Fire Service Research Institute, MO [SE]
J. Allen Metheny, Sr., Hartly Volunteer Fire Company, DE [U]
Rep. National Volunteer Fire Council
Thomas J. Mettler, Waterous Company, MN [M]
David A. Ogilvie, Pierce Manufacturing Inc., WI [M]
William C. Peters, City of Jersey City Fire Department, NJ [E]
Jeff Piechura, Northwest Fire District, AZ [E]
Gary R. Pope, Fairfax County Fire/Rescue Department, VA [U]
Carl E. Punkay, Champaign Fire Department, IL [U]
James A. Salmi, American LaFrance Aerials, PA [M]
Alan Saulsbury, Saulsbury Fire Rescue Inc., NY [M]
Thomas A. Stalnaker, Goshen Fire Co., PA [U]
John M. Terefinko, KME Fire Apparatus, PA [M]
Robert D. Tutterow, Jr., Charlotte Fire Department, NC [U]
William von Zehle, Jr., Ridgefield, CT [E]
Rep. International Association of Fire Chiefs
David White, Fire & Safety Specialists, Inc., TX [SE]
John R. Witt, Safetek Emergency Vehicles Ltd., Canada [M]

Alternates

James T. Currin, KME Fire Apparatus, VA [M]
(Alt. to J. M. Terefinko)
Ronald L. Ewers, Class I, FL [M]
(Alt. to G. Handwerk)
Jim Johannessen, Underwriters Laboratories Inc., PA [RT]
(Alt. to T. Hillenbrand)
Brad C. Kobielusz, Poudre Fire Authority, CO [U]
(Alt. to R. D. Tutterow)
J. Roger Lackore, Pierce Manufacturing Inc., WI [M]
(Alt. to D. A. Ogilvie)
William McCombs, Emergency One, Inc., FL [M]
(Alt. to A. Saulsbury)
Thomas H. McCullough, II, PA [I]
(Alt. to G. P. Carlson)
Dan W. McKenzie, USDA Forest Service, CA [U]
(Alt. to G. L. Gholson)
Tom Reser, Edwards Manufacturing, OR [M]
(Alt. to W. Ballantyne)
Thomas G. Stites, Sutphen Corporation, OH [M]
(Alt. to K. L. Koch)
Edward F. Straw, Insurance Services Office, Inc., GA [I]
(Alt. to ISO Rep.)
Dean David Ulrich, Los Angeles City Fire Dept. #1, CA [U]
(Alt. to D. L. Frazeur)

Nonvoting

William F. Foley, Orland Fire Protection District, IL
(Member Emeritus)
Howard L. McMillen, City of Fort Worth Fire Department, TX
(Member Emeritus)
Heinz E. Otte, Mendota Heights, MN
(Member Emeritus)

Carl E. Peterson, NFPA Staff Liaison

This list represents the membership at the time the Committee was balloted on the final text of this edition. Since that time, changes in the membership may have occurred. A key to classifications is found at the back of the document.

NOTE: Membership on a committee shall not in and of itself constitute an endorsement of the Association or any document developed by the committee on which the member serves.

Committee Scope: This Committee shall have primary responsibility for documents on the design and performance of fire apparatus for use by the fire service.

Copyright National Fire Protection Association
Provided by IHS under license with NFPA
No reproduction or networking permitted without license from IHS
Not for Resale

Contents

Chapter 1 Administration **1901–** 7
1.1 Scope **1901–** 7
1.2 Purpose **1901–** 7
1.3 Application **1901–** 7
1.4 Retroactivity **1901–** 7
1.5 Equivalency **1901–** 7
1.6 Units and Formulas **1901–** 7

Chapter 2 Referenced Publications **1901–** 7
2.1 General **1901–** 7
2.2 NFPA Publications **1901–** 7
2.3 Other Publications **1901–** 7

Chapter 3 Definitions **1901–** 9
3.1 General **1901–** 9
3.2 NFPA Official Definitions **1901–** 9
3.3 General Definitions **1901–** 9

Chapter 4 General Requirements **1901–** 14
4.1 General **1901–** 14
4.2 Requirements by Apparatus Type **1901–** 14
4.3 Responsibility of Purchaser **1901–** 14
4.4 Responsibility of Contractor **1901–** 14
4.5 Fire Apparatus Components **1901–** 16
4.6 Legal Requirements **1901–** 16
4.7 Third-Party Certification of Test Results **1901–** 16
4.8 Manufacturer Certification of Test Results **1901–** 16
4.9 Personnel Protection **1901–** 16
4.10 Controls and Instructions **1901–** 17
4.11 Component Protection **1901–** 17
4.12 Vehicle Stability **1901–** 17
4.13 Apparatus Performance **1901–** 17
4.14 Roadability **1901–** 17
4.15 Serviceability **1901–** 17
4.16 Road Tests **1901–** 17
4.17 Tests on Delivery **1901–** 18
4.18 Documentation **1901–** 18
4.19 Data Required of the Contractor **1901–** 18

Chapter 5 Pumper Fire Apparatus **1901–** 19
5.1 General **1901–** 19
5.2 Fire Pump **1901–** 19
5.3 Aerial Device **1901–** 19
5.4 Water Tank **1901–** 19
5.5 Equipment Storage **1901–** 19
5.6 Hose Storage **1901–** 19
5.7 Equipment Supplied by the Contractor **1901–** 19
5.8 Minor Equipment **1901–** 20

Chapter 6 Initial Attack Fire Apparatus **1901–** 20
6.1 General **1901–** 20
6.2 Fire Pump **1901–** 20
6.3 Water Tank **1901–** 20
6.4 Equipment Storage **1901–** 20
6.5 Hose Storage **1901–** 20
6.6 Equipment Supplied by the Contractor **1901–** 20
6.7 Minor Equipment **1901–** 21

Chapter 7 Mobile Water Supply Fire Apparatus **1901–** 21
7.1 General **1901–** 21
7.2 Pump **1901–** 21
7.3 Water Tank **1901–** 21
7.4 Equipment Storage **1901–** 21
7.5 Hose Storage **1901–** 21
7.6 Suction Hose **1901–** 21
7.7 Minor Equipment **1901–** 22

Chapter 8 Aerial Fire Apparatus **1901–** 22
8.1 General **1901–** 22
8.2 Aerial Device **1901–** 22
8.3 Fire Pump **1901–** 22
8.4 Water Tank **1901–** 22
8.5 Equipment Storage **1901–** 22
8.6 Hose Storage **1901–** 22
8.7 Ground Ladders **1901–** 22
8.8 Minor Equipment **1901–** 23

Chapter 9 Quint Fire Apparatus **1901–** 23
9.1 General **1901–** 23
9.2 Fire Pump **1901–** 23
9.3 Aerial Device **1901–** 24
9.4 Water Tank **1901–** 24
9.5 Equipment Storage **1901–** 24
9.6 Hose Storage **1901–** 24
9.7 Equipment Supplied by the Contractor **1901–** 24
9.8 Minor Equipment **1901–** 24

Chapter 10 Special Service Fire Apparatus **1901–** 25
10.1 General **1901–** 25
10.2 Pump **1901–** 25
10.3 Equipment Storage **1901–** 25
10.4 Equipment Supplied by the Contractor **1901–** 25
10.5 Minor Equipment **1901–** 25

Chapter 11 Mobile Foam Fire Apparatus **1901–** 25
11.1 General **1901–** 25
11.2 Fire Pump **1901–** 25
11.3 Aerial Device **1901–** 25
11.4 Foam Proportioning System **1901–** 26
11.5 Foam Tank **1901–** 26
11.6 Equipment Storage **1901–** 26

Copyright National Fire Protection Association
Provided by IHS under license with NFPA
No reproduction or networking permitted without license from IHS
Not for Resale

11.7 Hose Storage 1901– 26
11.8 Equipment Supplied by the Contractor 1901– 26
11.9 Minor Equipment 1901– 26

Chapter 12 Chassis and Vehicle Components ... 1901– 27
12.1 Carrying Capacity 1901– 27
12.2 Engine and Engine System Design 1901– 27
12.3 Vehicle Components 1901– 29

Chapter 13 Low Voltage Electrical Systems and Warning Devices 1901– 30
13.1 General 1901– 30
13.2 Wiring 1901– 30
13.3 Power Supply 1901– 31
13.4 Batteries 1901– 31
13.5 Starting Device 1901– 31
13.6 Temperature Exposure 1901– 31
13.7 Electromagnetic Interference 1901– 32
13.8 Optical Warning Devices 1901– 32
13.9 Audible Warning Devices 1901– 35
13.10 Work Lighting 1901– 35
13.11 Hazard Light 1901– 35
13.12 Backup Alarm 1901– 35
13.13 Stop, Tail, and Directional Lights 1901– 35
13.14 Electrical System Performance Tests ... 1901– 36
13.15 Documentation 1901– 36

Chapter 14 Driving and Crew Areas 1901– 36
14.1 General 1901– 36
14.2 Cab Tilt Systems 1901– 37
14.3 Driving Compartment 1901– 38
14.4 Tractor-Drawn Vehicles 1901– 38

Chapter 15 Body, Compartments, and Equipment Mounting 1901– 38
15.1 Compartmentation 1901– 38
15.2 Radio Space 1901– 38
15.3 Equipment Containment 1901– 39
15.4 Powered Equipment Racks 1901– 39
15.5 SCBA Storage 1901– 39
15.6 Pump and Plumbing Access 1901– 39
15.7 Stepping, Standing, and Walking Surfaces 1901– 39
15.8 Access Handrails 1901– 40
15.9 Metal Finish 1901– 40
15.10 Hose Storage 1901– 40
15.11 Receivers and Anchors for Rope and Removable Winches 1901– 40
15.12 Slip-on Fire-Fighting Module 1901– 41

Chapter 16 Fire Pumps and Associated Equipment 1901– 41
16.1 Application 1901– 41
16.2 Design and Performance Requirements 1901– 41
16.3 Pumping Engine Requirements 1901– 42
16.4 Power Train Capability 1901– 42
16.5 Construction Requirements 1901– 45
16.6 Pump Intake Connections 1901– 45
16.7 Pump Discharge Outlets 1901– 46
16.8 Pump Drains 1901– 46
16.9 Pump Operator's Panel 1901– 46
16.10 Pump Controls 1901– 46
16.11 Pump Engine Controls 1901– 49
16.12 Instrumentation 1901– 49
16.13 Required Testing 1901– 50

Chapter 17 Auxiliary Pumps and Associated Equipment 1901– 53
17.1 Application 1901– 53
17.2 Pump Performance 1901– 53
17.3 Power Train Capability 1901– 53
17.4 Construction Requirements 1901– 53
17.5 Pump Intake Connections 1901– 53
17.6 Pump Discharge Connections 1901– 53
17.7 Pump Operator's Panel 1901– 53
17.8 Pump Controls 1901– 53
17.9 Pump Drive Systems 1901– 54
17.10 Engine Controls 1901– 54
17.11 Gauges and Instruments 1901– 54
17.12 Testing 1901– 55

Chapter 18 Industrial Supply Pumps and Associated Equipment 1901– 55
18.1 Application 1901– 55
18.2 Design and Performance Requirements 1901– 55
18.3 Pumping Engine Requirements 1901– 56
18.4 Power Train Capability 1901– 58
18.5 Construction Requirements 1901– 58
18.6 Pump Intake Connections 1901– 58
18.7 Pump Discharge Outlets 1901– 59
18.8 Pump Drains 1901– 60
18.9 Pump Operator's Panel 1901– 60
18.10 Pump Controls 1901– 60
18.11 Pump Engine Controls 1901– 62
18.12 Instrumentation 1901– 62
18.13 Required Testing 1901– 63

Chapter 19 Water Tanks 1901– 65
19.1 Application 1901– 65
19.2 Tank Construction 1901– 65
19.3 Tank-to-Pump Intake Line 1901– 66
19.4 Filling and Venting 1901– 66
19.5 Mobile Water Supply Apparatus 1901– 66
19.6 Water Tank Capacity Certification 1901– 66

Chapter 20 Aerial Devices 1901– 67
20.1 General Requirements 1901– 67
20.2 Aerial Ladder Requirements 1901– 67

Copyright National Fire Protection Association
Provided by IHS under license with NFPA
No reproduction or networking permitted without license from IHS
Not for Resale

20.3 Aerial Ladder Rated Capacity **1901–** 68
20.4 Aerial Ladder Operating Position **1901–** 68
20.5 Aerial Ladder Operating Mechanisms **1901–** 68
20.6 Aerial Ladder Water Delivery System **1901–** 69
20.7 Elevating Platform Requirements **1901–** 69
20.8 Elevating Platform Rated Capacity **1901–** 70
20.9 Elevating Platform Operating Positions **1901–** 70
20.10 Elevating Platform Operating Mechanisms **1901–** 70
20.11 Ladders on the Elevating Platform **1901–** 71
20.12 Elevating Platform Water Delivery System **1901–** 71
20.13 Water Tower Requirements **1901–** 71
20.14 Water Tower Rated Capacity **1901–** 71
20.15 Water Tower Operating Mechanisms **1901–** 72
20.16 Water Tower Water Delivery System **1901–** 72
20.17 Control Devices **1901–** 72
20.18 Safety **1901–** 73
20.19 Hydraulic System **1901–** 73
20.20 Structure **1901–** 74
20.21 Stabilization **1901–** 74
20.22 Quality Control **1901–** 74
20.23 Instruction Plates and Signs **1901–** 75
20.24 Certification Tests **1901–** 75
20.25 Manufacturer's Predelivery Test **1901–** 76

Chapter 21 Foam Proportioning Systems **1901–** 76
21.1 Application **1901–** 76
21.2 Requirements by Type of Foam Proportioning System **1901–** 76
21.3 Design and Performance Requirements of a Foam System **1901–** 77
21.4 Controls for Foam Systems **1901–** 77
21.5 Foam System Pressure-Indicating Devices, Flowmeters, and Indicators **1901–** 77
21.6 Atmospheric Foam Concentrate Tank **1901–** 77
21.7 Foam Concentrate Pump **1901–** 78
21.8 Pressure Vessel Foam Concentrate or Foam Solution Tanks **1901–** 78
21.9 Labels, Plates, and Instructions **1901–** 79
21.10 Foam Proportioning System Accuracy ... **1901–** 79
21.11 Certification and Documentation **1901–** 79

Chapter 22 Compressed Air Foam Systems **1901–** 79
22.1 Application **1901–** 79
22.2 General Requirements **1901–** 79
22.3 Compressed Air Source **1901–** 79
22.4 Air Mixing **1901–** 80
22.5 Compressed Air System Piping **1901–** 80
22.6 Air Source Controls **1901–** 80
22.7 Foam System Pressure-Indicating Devices, Flowmeters, and Indicators **1901–** 80
22.8 Labels, Plates, and Instruction Plates **1901–** 80
22.9 Manufacturer's Predelivery Tests **1901–** 80

Chapter 23 Line Voltage Electrical Systems **1901–** 81
23.1 Application **1901–** 81
23.2 General Requirements **1901–** 81
23.3 Grounding and Bonding **1901–** 81
23.4 Power Source General Requirements ... **1901–** 82
23.5 Chassis Engine–Driven Generators **1901–** 82
23.6 Additional Power Source Requirements **1901–** 83
23.7 Portable Generator Installations **1901–** 84
23.8 Line Voltage Supplied from an External Source **1901–** 84
23.9 Power Supply Assembly **1901–** 84
23.10 Overcurrent Protection **1901–** 85
23.11 Wiring Methods **1901–** 85
23.12 Wiring System Components **1901–** 85
23.13 Cord Reels **1901–** 86
23.14 Scene Lighting Systems **1901–** 87
23.15 Power-Operated Light Mast **1901–** 87
23.16 Electrical System Testing **1901–** 87

Chapter 24 Command and Communications ... **1901–** 88
24.1 General **1901–** 88
24.2 Location **1901–** 88
24.3 Climate Control **1901–** 88
24.4 Noise Levels **1901–** 88
24.5 Lighting Levels **1901–** 88
24.6 Command Working Surfaces and Countertop **1901–** 88
24.7 Seating in Command Center **1901–** 88
24.8 Cabinets and Equipment Storage **1901–** 89
24.9 Wall, Ceiling, and Floor Surfaces **1901–** 89
24.10 Communications and Electrical Consoles **1901–** 89
24.11 Computer Equipment and Installation **1901–** 89
24.12 Video Equipment and Installation **1901–** 89

Chapter 25 Air Systems **1901–** 89
25.1 Application **1901–** 89
25.2 Provisions Applying to All Air Systems ... **1901–** 89
25.3 Breathing Air Compressor **1901–** 91
25.4 Purification System **1901–** 92
25.5 Air Storage Systems **1901–** 92
25.6 Air Booster Systems **1901–** 93
25.7 Air Supply Regulation **1901–** 93
25.8 Air Control Panel **1901–** 93
25.9 SCBA Fill Station **1901–** 93
25.10 Air Hose Reels **1901–** 94
25.11 Air Hose **1901–** 95

--`,,```,,,,````-`-`,,`,,`,`,,`---
Copyright National Fire Protection Association
Provided by IHS under license with NFPA
No reproduction or networking permitted without license from IHS
Not for Resale

25.12 Low Pressure Utility-Air Supply **1901–** 95
25.13 Remote Breathing-Air Systems **1901–** 95
25.14 Testing **1901–** 95
25.15 Initial Delivery **1901–** 96

Chapter 26 Winches **1901–** 96
26.1 General **1901–** 96
26.2 Winch Wire or Synthetic Rope **1901–** 96
26.3 Electric Powered Winches **1901–** 96
26.4 Hydraulically Driven Winches **1901–** 96

Annex A Explanatory Material **1901–** 97

Annex B Specifying and Procuring Fire Apparatus **1901**–139

Annex C Weights and Dimensions for Common Equipment **1901**–169

Annex D Guidelines for First Line and Reserve Apparatus **1901**–186

Annex E History of NFPA 1901 ..... **1901**–188

Annex F Informational References **1901**–189

Index **1901**–190

Copyright National Fire Protection Association
Provided by IHS under license with NFPA
No reproduction or networking permitted without license from IHS
Not for Resale

NFPA 1901

Standard for

Automotive Fire Apparatus

2003 Edition

IMPORTANT NOTE: This NFPA document is made available for use subject to important notices and legal disclaimers. These notices and disclaimers appear in all publications containing this document and may be found under the heading "Important Notices and Disclaimers Concerning NFPA Documents." They can also be obtained on request from NFPA or viewed at www.nfpa.org/disclaimers.

NOTICE: An asterisk (*) following the number or letter designating a paragraph indicates that explanatory material on the paragraph can be found in Annex A.

A reference in brackets [ ] following a section or paragraph indicates material that has been extracted from another NFPA document. As an aid to the user, Annex F lists the complete title and edition of the source documents for both mandatory and nonmandatory extracts. Editorial changes to extracted material consist of revising references to an appropriate division in this document or the inclusion of the document number with the division number when the reference is to the original document. Requests for interpretations or revisions of extracted text shall be sent to the technical committee responsible for the source document.

Information on referenced publications can be found in Chapter 2 and Annex F.

Chapter 1 Administration

1.1* Scope. This standard defines the requirements for new automotive fire apparatus designed to be used under emergency conditions to transport personnel and equipment and to support the suppression of fires and mitigation of other hazardous situations.

1.2 Purpose. This standard specifies the minimum requirements for new automotive fire apparatus.

1.3 Application.

1.3.1* This standard shall apply to new fire apparatus that meet the following criteria:

(1) That are of 10,000 lb (4500 kg) or greater gross vehicle weight rating (GVWR)
(2) That are designed for use under emergency conditions to transport personnel and equipment and to support the suppression of fires and mitigation of other hazardous situations
(3) That are contracted for on or after January 1, 2004

1.3.2 Nothing shall prevent the use of the standard prior to January 1, 2004, if the purchaser and the contractor both agree.

1.3.3 This standard shall not apply to wildland fire apparatus, which are covered by NFPA 1906, *Standard for Wildland Fire Apparatus*.

1.4* Retroactivity. This standard shall not be applied retroactively.

1.5 Equivalency. Nothing in this standard is intended to prevent the use of systems, methods, or devices of equivalent or superior quality, strength, fire resistance, effectiveness, durability, and safety in place of those prescribed by this standard, provided technical documentation is submitted to the authority having jurisdiction to demonstrate equivalency and the system, method, or device is approved for the intended purpose.

1.6* Units and Formulas. In this standard, values for measurement in inch-pound units are followed by equivalents in metric units. Either set of values can be used, but the same set of values (either inch-pound units or metric units) shall be used consistently.

Chapter 2 Referenced Publications

2.1 General. The documents or portions thereof listed in this chapter are referenced within this standard and shall be considered part of the requirements of this document.

2.2 NFPA Publications. National Fire Protection Association, 1 Batterymarch Park, P.O. Box 9101, Quincy, MA 02269-9101.

NFPA 70, *National Electrical Code®*, 2002 edition.

NFPA 1002, *Standard for Fire Apparatus Driver/Operator Professional Qualifications,* 2003 edition.

NFPA 1500, *Standard on Fire Department Occupational Safety and Health Program,* 2002 edition.

NFPA 1914, *Standard for Testing Fire Department Aerial Devices,* 2002 edition.

NFPA 1931, *Standard on Design of and Design Verification Tests for Fire Department Ground Ladders,* 1999 edition.

NFPA 1961, *Standard on Fire Hose,* 2002 edition.

NFPA 1963, *Standard for Fire Hose Connections,* 2003 edition.

NFPA 1981, *Standard on Open-Circuit Self-Contained Breathing Apparatus for Fire and Emergency Services,* 2002 edition.

NFPA 1983, *Standard on Fire Service Life Safety Rope and System Components,* 2001 edition.

NFPA 1989, *Standard on Breathing Air Quality for Fire and Emergency Services Respiratory Protection,* 2003 edition.

2.3 Other Publications.

2.3.1 ANSI Publications. American National Standards Institute, Inc., 11 West 42nd Street, 13th floor, New York, NY 10036.

ANSI Z34.1, *Standard for Third-Party Certification Programs for Products, Processes, and Services*, 1993.

ANSI Z535.4, *Product Safety Signs and Labels*, 2002.

2.3.2 ASME Publications. American Society of Mechanical Engineers, Three Park Avenue, New York, NY 10016-5990.

ASME *Boiler and Pressure Vessel Code*, Section VIII, Division 1 and Division 2, 2001.

ASME B40.100, *Pressure Gauges and Gauge Attachments*, 1998.

2.3.3 ASNT Publication. American Society for Nondestructive Testing, Inc., 1711 Arlingate Lane, Columbus, OH 43228-0518.

ASNT CP-189, *Standard for Qualification and Certification of Nondestructive Testing Personnel*, 2001.

2.3.4 ASTM Publications. American Society for Testing and Materials, 100 Barr Harbor Drive, West Conshohocken, PA 19428-2959.

ASTM B 647, *Standard Test Method for Indentation Hardness of Aluminum Alloys by Means of a Webster Hardness Gage*, 1984 (reconfirmed 2000).

Copyright National Fire Protection Association
Provided by IHS under license with NFPA
No reproduction or networking permitted without license from IHS
Not for Resale

ASTM B 648, *Standard Test Method for Indentation Hardness of Aluminum Alloys by Means of a Barcol Impressor*, 1978 (reconfirmed 2000).

ASTM D 4956, *Standard Specification for Retroreflective Sheeting for Traffic Control*, 2001.

ASTM E 6, *Standard Terminology Relating to Methods of Mechanical Testing*, 2002.

ASTM E 10, *Standard Test Method for Brinell Hardness of Metallic Materials*, 2001.

ASTM E 18, *Standard Test Methods for Rockwell Hardness and Rockwell Superficial Hardness of Metallic Materials*, 2002.

ASTM E 92, *Standard Test Method for Vickers Hardness of Metallic Materials*, 1982 (reconfirmed 1997).

ASTM E 114, *Standard Practice for Ultrasonic Pulse-Echo Straight-Beam Examination by the Contact Method*, 1995 (reconfirmed 2001).

ASTM E 165, *Standard Test Method for Liquid Penetrant Examinations*, 2002.

ASTM E 569, *Standard Practice for Acoustic Emission Monitoring of Structures During Controlled Stimulation*, 2002.

ASTM E 650, *Standard Guide for Mounting Piezoelectric Acoustic Emission Sensors*, 1997 (reconfirmed 2002).

ASTM E 709, *Standard Guide for Magnetic Particle Examination*, 2001.

ASTM E 797, *Standard Practice for Measuring Thickness by Manual Ultrasonic Pulse-Echo Contact Method*, 1995 (reconfirmed 2001).

ASTM E 1004, *Standard Practice for Determining Electrical Conductivity Using the Electromagnetic (Eddy-Current) Method*, 2002.

ASTM E 1032, *Standard Test Method for Radiographic Examination of Weldments*, 2001.

ASTM F 1677, *Standard Test Method for Using a Portable Inclinable Articulated Strut Slip Tester (PIAST)*, 1996.

ASTM F 1679, *Standard Test Method for Using a Variable Incidence Tribometer (VIT)*, 2000.

2.3.5 AWS Publications. American Welding Society, 550 N.W. LeJeune Road, Miami, FL 33126.

AWS B1.10, *Guide for the Nondestructive Examination of Welds*, 1999.

AWS D1.1, *Structural Welding Code — Steel*, 2002.

AWS D1.2, *Structural Welding Code — Aluminum*, 1997.

AWS D1.3, *Structural Welding Code — Sheet Steel*, 1998.

2.3.6 CGA Publications. Compressed Gas Association, 1725 Jefferson Davis Highway, Suite 1004, Arlington, VA 22202.

G-7, *Compressed Air for Human Respiration*, 1990.

G-7.1, *Commodity Specification for Air*, 1997.

2.3.7 CSA Publications. Canadian Standards Association, 178 Rexdale Boulevard, Toronto, Ontario M9W 1R3, Canada.

CSA W47.1, *Standard for Certification of Companies for Fusion Welding of Steel Structures*, 1992 (reconfirmed 2001).

CSA W47.2, *Certification of Companies for Fusion Welding of Aluminum*, 1987 (reconfirmed 1998).

2.3.8 SAE Publications. Society of Automotive Engineers, 400 Commonwealth Drive, Warrendale, PA 15096.

SAE J156, *Fusible Links*, 2000.

SAE J541, *Voltage Drop for Starting Motor Circuits*, 1996.

SAE J551/2, *Test Limits and Methods of Measurement of Radio Disturbance Characteristics of Vehicles, Motorboats, and Spark-Ignited Engine-Driven Devices*, 1994.

SAE J553, *Circuit Breakers*, 1996.

SAE J554, *Electric Fuses (Cartridge Type)*, 1987.

SAE J575, *Test Methods and Equipment for Lighting Devices and Components for Use on Vehicles Less Than 2032 mm in Overall Width*, 1992.

SAE J578, *Color Specification*, 2002.

SAE J595, *Flashing Warning Lamps for Authorized Emergency, Maintenance, and Service Vehicles*, 1990.

SAE J683, *Tire Chain Clearance — Trucks, Buses (Except Suburban, Intercity, and Transit Buses), and Combinations of Vehicles*, 1985.

SAE J833, *Human Physical Dimensions*, 1989.

SAE J845, *Optical Warning Devices for Authorized Emergency, Maintenance, and Service Vehicles*, 1997.

SAE J994, *Alarm — Backup — Electric, Laboratory Performance Testing*, 1993.

SAE J1127, *Battery Cable*, 2000.

SAE J1128, *Low Tension Primary Cable*, 2000.

SAE J1292, *Automobile, Truck, Truck-Tractor, Trailer, and Motor Coach Wiring*, 1981.

SAE J1318, *Gaseous Discharge Warning Lamp for Authorized Emergency, Maintenance, and Service Vehicles*, 1998.

SAE J1330, *Photometry Laboratory Accuracy Guidelines*, 2000.

SAE J1690, *Flashers*, 1996.

SAE J1849, *Emergency Vehicle Sirens*, 2002.

SAE J1888, *High Current Time Lag Electric Fuses*, 1990.

SAE J1889, *L.E.D. Lighting Devices*, 1999.

SAE J2077, *Miniature Blade Type Electrical Fuses*, 1990.

2.3.9 TRA Publication. The Tire and Rim Association, Inc., 175 Montrose West Ave., Copley, OH 44321.

Tire and Rim Association — Year Book, 2002.

2.3.10 UL Publications. Underwriters Laboratories Inc., 333 Pfingsten Road, Northbrook, IL 60062.

UL 498, *Standard for Safety Attachment Plugs and Receptacles*, 2001.

UL 969, *Standard for Marking and Labeling Systems*, 1995.

2.3.11 U.S. Government Publications. U.S. Government Printing Office, Washington, DC 20402.

Title 29, Code of Federal Regulations, Part 1910.169, "Air receivers."

Title 49, Code of Federal Regulations, Part 571, Subpart B, "Federal Motor Vehicle Safety Standards," No. 209, "Seat belt assemblies."

Copyright National Fire Protection Association
Provided by IHS under license with NFPA
No reproduction or networking permitted without license from IHS
Not for Resale

Title 49, Code of Federal Regulations, Part 571, Subpart B, "Federal Motor Vehicle Safety Standards," No. 210, "Seat belt assembly anchorages."

Title 49, Code of Federal Regulations, Part 571, Subpart B, "Federal Motor Vehicle Safety Standards," No. 302, "Flammability of interior materials."

Title 49, Code of Federal Regulations, Part 178.37, "Specification 3AA and 3AAX seamless steel cylinders."

Title 49, Code of Federal Regulations, paragraph 393.94(c), "Vehicle interior noise levels test procedure."

Chapter 3 Definitions

3.1 General. The definitions contained in this chapter shall apply to the terms used in this standard. Where terms are not included, common usage of the terms shall apply.

3.2 NFPA Official Definitions.

3.2.1* Approved. Acceptable to the authority having jurisdiction.

3.2.2* Authority Having Jurisdiction (AHJ). An organization, office, or individual responsible for enforcing the requirements of a code or standard, or for approving equipment, materials, an installation, or a procedure.

3.2.3 Labeled. Equipment or materials to which has been attached a label, symbol, or other identifying mark of an organization that is acceptable to the authority having jurisdiction and concerned with product evaluation, that maintains periodic inspection of production of labeled equipment or materials, and by whose labeling the manufacturer indicates compliance with appropriate standards or performance in a specified manner.

3.2.4* Listed. Equipment, materials, or services included in a list published by an organization that is acceptable to the authority having jurisdiction and concerned with evaluation of products or services, that maintains periodic inspection of production of listed equipment or materials or periodic evaluation of services, and whose listing states that either the equipment, material, or service meets appropriate designated standards or has been tested and found suitable for a specified purpose.

3.2.5 Shall. Indicates a mandatory requirement.

3.2.6 Should. Indicates a recommendation or that which is advised but not required.

3.3 General Definitions.

3.3.1 Acceptance. An agreement between the purchasing authority and the contractor that the terms and conditions of the contract have been met.

3.3.2 Acceptance Tests. Tests performed on behalf of or by the purchaser at the time of delivery to determine compliance with the specifications for the fire apparatus.

3.3.3 Active Horizontal Angles of Light Emission. The angles, measured in a horizontal plane passing through the optical center of the optical source, as specified by the manufacturer of the optical device, between which the optical source contributes optical power.

3.3.4 Aerial Device. An aerial ladder, elevating platform, or water tower that is designed to position personnel, handle materials, provide continuous egress, or discharge water.

3.3.5 Aerial Fire Apparatus. A vehicle equipped with an aerial ladder, elevating platform, aerial ladder platform, or water tower that is designed and equipped to support fire fighting and rescue operations by positioning personnel, handling materials, providing continuous egress, or discharging water at positions elevated from the ground.

3.3.6 Aerial Ladder. A self-supporting, turntable-mounted, power-operated ladder of two or more sections permanently attached to a self-propelled automotive fire apparatus and designed to provide a continuous egress route from an elevated position to the ground.

3.3.7 Air Control Panel. A consolidated arrangement of valves, regulators, gauges, and air system piping at a location that allows the operator to monitor and control the airflow and pressure within the air system from a centralized location.

3.3.8 Air Quality Monitors. Instruments that monitor the air for such elements as carbon monoxide levels, moisture levels, and percent of oxygen.

3.3.9 Air Tank. A storage vessel meeting the requirements of either U.S. Department of Transportation (DOT) or American Society of Mechanical Engineers (ASME) and used to store an accumulation of air under pressure.

3.3.10 Air Truck. A vehicle used to supply breathing air either to refill self-contained breathing apparatus (SCBA) or to supply respirators directly through hose lines.

3.3.11 Angle of Approach. The smallest angle made between the road surface and a line drawn from the front point of ground contact of the front tire to any projection of the apparatus in front of the front axle.

3.3.12 Angle of Departure. The smallest angle made between the road surface and a line drawn from the rear point of ground contact of the rear tire to any projection of the apparatus behind the rear axle.

3.3.13 Articulating Boom. An aerial device consisting of two or more folding boom sections whose extension and retraction modes are accomplished by adjusting the angle of the knuckle joints.

3.3.14 ASME Pressure Vessel. A pressure vessel used for the storage or accumulation of air or gas under pressure that is constructed and tested in accordance with the ASME *Boiler and Pressure Vessel Code*.

3.3.15 Authorized Person. A person approved or assigned to perform specific types of duties or to be at a specific location at the job site.

3.3.16 Automatic Electrical Load Management System. A device that continuously monitors the electrical system voltage and automatically sheds predetermined loads in a selected order to prevent overdischarging of the apparatus' batteries.

3.3.17 Auxiliary Braking System. A braking system in addition to the service brakes, such as an engine retarder, transmission retarder, driveline retarder, or exhaust retarders.

3.3.18 Auxiliary Hydraulic Power. A small gasoline engine, diesel engine, or electric motor–driven hydraulic pump used to operate an aerial device in an emergency or in lieu of the main hydraulic system.

Copyright National Fire Protection Association
Provided by IHS under license with NFPA
No reproduction or networking permitted without license from IHS
Not for Resale

3.3.19 Auxiliary Pump. A water pump mounted on the fire apparatus in addition to a fire pump and used for fire fighting either in conjunction with or independent of the fire pump.

3.3.20 Back-Up Alarm. An audible device designed to warn that the fire apparatus is in reverse gear.

3.3.21 Base Rail. The lower chord (rail) of an aerial ladder to which rungs and reinforcements are attached.

3.3.22 Base Section. The first or bottom section of an aerial device.

3.3.23 Bonding. The permanent joining of metallic parts to form an electrically conductive path that will ensure electrical continuity and the capacity to conduct safely any current likely to be imposed. [**70:**100]

3.3.24 Boom. An assembled section of an aerial device. The boom construction can be of the stressed skin box beam type, the trussed lattice type, or the open "U" truss-type design.

3.3.25 Booster Pump. See 3.3.19, *Auxiliary Pump.*

3.3.26 Booster Supplied Air System. A system that is capable of increasing air pressure from an air storage system or a compressor system.

3.3.27 Breathing Air. A respirable gas mixture derived from either normal atmospheric air or from manufactured synthetic air, stored in a compressed state in storage cylinders and respirator breathing air cylinders, and supplied to the user in gaseous form. [**1989:**3.3]

3.3.28 Breathing Air System. The complete assembly of equipment such as compressors, a purification system, pressure regulators, safety devices, manifolds, air tanks or receivers, and interconnected piping required to deliver breathing air.

3.3.29 Bubble (Foam). A thin-walled, roughly spherical, film of liquid inflated with air.

3.3.30 Burst Pressure. The pressure at which a hydraulic component fails due to stresses induced as a result of the pressure.

3.3.31 Carbon Monoxide Monitor. A monitoring device that samples a purified air stream for trace elements of carbon monoxide (CO).

3.3.32 Cascade System. A method of piping air tanks together to allow air to be supplied to the SCBA fill station using a progressive selection of tanks each with a higher pressure level.

3.3.33 Center of Gravity. The point at which the entire weight of the fire apparatus is considered to be concentrated so that, if supported at this point, the apparatus would remain in equilibrium in any position.

3.3.34 Chassis. The basic operating motor vehicle including the engine, frame, and other essential structural and mechanical parts, but exclusive of the body and all appurtenances for the accommodation of driver, property, passengers, appliances, or equipment related to other than control. Common usage might, but need not, include a cab (or cowl).

3.3.35 Class A Fire. A fire in ordinary combustible materials, such as wood, cloth, paper, rubber, and many plastics. [**10:**3.3]

3.3.36 Class A Foam. Foam intended for use on Class A fires.

3.3.37 Class B Fire. A fire in flammable liquids, combustible liquids, petroleum greases, tars, oils, oil-based paints, solvents, lacquers, alcohols, and flammable gases. [**10:**3.3]

3.3.38 Class B Foam. Foam intended for use on Class B fires.

3.3.39 Combination Vehicle. A vehicle consisting of a pulling tractor and trailer.

3.3.40 Command and Communications Apparatus. A fire apparatus used primarily for communications and incident command.

3.3.41* Compound Gauge. A gauge that indicates pressure both above and below atmospheric pressure.

3.3.42* Compressed Air Foam System (CAFS). A foam system that combines air under pressure with foam solution to create foam.

3.3.43 Continuous Duty. Operation at a constant rated load for an indefinitely long period.

3.3.44 Continuous Egress. A continuous exit or rescue path down an aerial device from an elevated position to the ground.

3.3.45* Contractor. The person or company responsible for fulfilling an agreed upon contract.

3.3.46 Convenient Reach. The ability of the operator to manipulate the controls from a driving/riding position without excessive movement away from the seat back or without excessive loss of eye contact with the roadway.

3.3.47 Dead Load. The weight of the aerial device structure and all materials, components, mechanisms, or equipment permanently fastened thereto.

3.3.48 Defect. A discontinuity in a part or a failure to function that interferes with the service or reliability for which the part was intended.

3.3.49 Discharge Outlet Size. The nominal size of the first fire hose connection from the pump on a discharge.

3.3.50 Documentation. Any data or information supplied by the manufacturer or contractor relative to the apparatus, including information on its operation, service, and maintenance.

3.3.51 DOT Cylinder. A pressure vessel constructed and tested in accordance with Title 49 CFR 178.37 that is used for the storage and transportation of air under pressure.

3.3.52 Drain Time (Foam). The time period it takes for a specified percent of the total solution contained in the foam to revert to liquid and to drain out of the bubble structure.

3.3.53 Dry Location. A location not normally exposed to moisture such as in the interior of the driving or crew compartment, the interior of a fully enclosed walk-in fire apparatus body, or a watertight compartment opened only for maintenance operations.

3.3.54 Dump Valve. A large opening from the water tank of a mobile water supply apparatus for unloading purposes.

3.3.55* Eductor. A device placed in a hose line or a discharge pipe that incorporates a venturi and proportions foam concentrate or other fire fighting agents into the water stream.

3.3.56* Electric Siren (Electromechanical). An audible warning device that produces sound by the use of an electric motor with an attached rotating slotted or perforated disc.

3.3.57 Electrical Equipment, Fixed. Any electrical equipment that is not removable without the use of tools or is hard wired to the vehicle's electrical system.

--`,,```,,,,````-`-`,,`,,`,`,,`---

Copyright National Fire Protection Association
Provided by IHS under license with NFPA
No reproduction or networking permitted without license from IHS
Not for Resale

3.3.58 Electrical Equipment, Portable. Any electrical equipment that is not fixed. *(See 3.3.57, Electrical Equipment, Fixed.)*

3.3.59* Electronic Siren. An audible warning device that produces sound electronically through the use of amplifiers and electromagnetic speakers.

3.3.60 Elevating Platform. A self-supporting, turntable-mounted device consisting of a personnel-carrying platform attached to the uppermost boom of a series of power-operated booms that articulate, telescope, or both and that are sometimes arranged to provide the continuous egress capabilities of an aerial ladder.

3.3.61 Enclosed Compartment. An area designed to protect stored items from environmental damage (weather resistant) that is confined on six sides and equipped with an access opening(s) that can be closed and latched.

3.3.62 Expansion Ratio. The ratio of the volume of foam in its aerated state to the original volume of nonaerated foam solution.

3.3.63 Exterior. A nonsheltered location exposed to the environment, either continuously or intermittently.

3.3.64 Fire Apparatus. A vehicle designed to be used under emergency conditions to transport personnel and equipment, and to support the suppression of fires and mitigation of other hazardous situations.

3.3.65 Fire Pump. A water pump with a rated capacity of 250 gpm (1000 L/min) or greater at 150 psi (1000 kPa) net pump pressure that is mounted on a fire apparatus and used for fire fighting.

3.3.66 Fixed Power Source. Any line voltage power source except a portable generator.

3.3.67 Fly Section. Any section of an aerial telescoping device beyond the base section.

3.3.68 FMVSS. Abbreviation for Federal Motor Vehicle Safety Standard. Regulations promulgated by National Highway Transportation Safety Administration (NHTSA) of the United States under Public Law 89-563, which are mandatory and must be complied with when vehicles or items of motor vehicle equipment are manufactured and certified thereto.

3.3.69 Foam. An aerated fire-extinguishing solution created by mixing air into foam solution to form bubbles.

3.3.70 Foam Concentrate. Foam firefighting agent as received from the manufacturer that must be diluted with water to make foam solution.

3.3.71 Foam Proportioner. A device or method to add foam concentrate to water to make foam solution.

3.3.72 Foam Proportioning System. The apparatus and techniques used to mix concentrate with water to make foam solution.

3.3.73 Foam Solution. A homogeneous mixture of water and foam concentrate in the proper proportions.

3.3.74 Fully Enclosed Personnel Area. A driver or passenger compartment on the fire apparatus that provides total enclosure on all sides, top, and bottom and has positive latching on all access doors.

3.3.75 Gallon. United States gallon.

3.3.76 Gauge. A round, analog pressure-indicating device that uses mechanical means to measure pressure.

3.3.77 Gauge Pressure. Pressure measured by an instrument where the pressure indicated is relative to atmospheric pressure.

3.3.78* GAWR (Gross Axle Weight Rating). The chassis manufacturer's specified maximum load-carrying capacity of an axle system, as measured at the tire-ground interfaces.

3.3.79* GCWR (Gross Combination Weight Rating). The chassis manufacturer's specified maximum load-carrying capacity for tractor trailer–type vehicles having three or more axle systems (a multiaxle installation is one system).

3.3.80* Grade. A measurement of the angle used in road design and expressed as a percentage of elevation change over distance.

3.3.81 Ground Clearance. The clearance under a vehicle at all locations except the axles and driveshaft connections to the axle.

3.3.82 Ground-Fault Circuit Interrupter (GFCI). A device intended for the protection of personnel that functions to deenergize a circuit or portion thereof within an established period of time when a current to ground exceeds some predetermined value that is less than that required to operate the overcurrent protective device of the supply circuit. [**70:**100]

3.3.83 Grounding Conductor. A non–current-carrying conductor used to connect equipment or the ground circuit of a wiring system to the power source grounding system.

3.3.84* GVWR (Gross Vehicle Weight Rating). The chassis manufacturer's specified maximum load-carrying capacity of a vehicle having two axle systems (a multiaxle axle installation is one system).

3.3.85 Hazardous Material Response Fire Apparatus. An emergency vehicle designed to carry various support equipment and personnel to a scene of a hazardous material incident.

3.3.86 High-Idle Speed Control. A control or switch system that provides a means to increase the engine operating speed from an idle condition to a higher preset operating speed.

3.3.87 Industrial Supply Pump. A water pump mounted on a mobile foam fire apparatus with a rated capacity of 3000 gpm (12,000 L/min) or greater at 100 psi (700 kPa) net pump pressure.

3.3.88 Initial Attack Apparatus. Fire apparatus with a permanently mounted fire pump of at least 250 gpm (1000 L/min) capacity, water tank, and hose body whose primary purpose is to initiate a fire suppression attack on structural, vehicular, or vegetation fires, and to support associated fire department operations.

3.3.89 In-Service Weight. The maximum actual vehicle weight under any conditions of mobile operation, sometimes referred to as gross vehicle weight.

3.3.90 Instability. A condition of a mobile unit in which the sum of the moments tending to overturn the unit exceeds the sum of the moments tending to resist overturning.

3.3.91 Intake Connection Size. The nominal size of the first fire hose connection from the pump on an intake.

3.3.92 Intake Relief Valve. A relief valve piped to the intake manifold of a pump and designed to automatically relieve excessive pressure from the incoming flow of water by discharging water to the environment.

Copyright National Fire Protection Association
Provided by IHS under license with NFPA
No reproduction or networking permitted without license from IHS
Not for Resale

3.3.93 Interior. A sheltered location not exposed to the environment.

3.3.94 Interlock. A device or arrangement by means of which the functioning of one part is controlled by the functioning of another.

3.3.95 Knuckle. A point of connection between upper and lower booms of an articulating device; the point at which lower and upper booms are hinged together.

3.3.96 Label. A visual indication whether in pictorial or word format that provides for the identification of a control, switch, indicator, or gauge, or the display of information useful to the operator.

3.3.97 Ladder Section. A structural member normally of an open "U" truss-type design that includes the rungs and comprises the base or fly section of an aerial ladder.

3.3.98 Line Voltage Circuit, Equipment, or System. An ac or dc electrical circuit, equipment, or system where the voltage to ground or from line to line is 30 volts (V) rms (ac) or 42.4 V peak (dc) or greater.

3.3.99 Line Voltage Conductor. An ungrounded current-carrying conductor of a line voltage circuit.

3.3.100 Live Load. Forces acting on the aerial device from personnel, portable equipment, water, and nozzle reaction.

3.3.101 Load Limit Indicator. A load indicator or an instruction plate, visible at the operator's position, that shows the recommended safe load at any condition of an aerial device's elevation and extension.

3.3.102 Low Voltage Circuit, Equipment, or System. An electrical circuit, equipment, or system where the voltage does not exceed 30 volts (V) rms (ac) or 42.4 V peak (dc), usually 12 V dc in fire apparatus.

3.3.103 Manufacturer. The person or persons, company, firm, corporation, partnership, or other organization responsible for turning raw materials or components into a finished product.

3.3.104* Maximum Pump Close-Off Pressure. The maximum pump discharge pressure obtained with all discharge outlets closed, with the pump primed and running, with the pump drive engine operating at maximum obtainable speed, and with the pump intake pressure at atmospheric pressure or less.

3.3.105 Minimum Continuous Electrical Load. The electrical current required to continuously operate a defined set of electrical devices.

3.3.106 Miscellaneous Equipment. Portable tools and equipment carried on a fire apparatus not including suction hose, fire hose, ground ladders, fixed power sources, hose reels, cord reels, breathing air systems, or other major equipment or components specified by the purchaser to be permanently mounted on the apparatus as received from the apparatus manufacturer.

3.3.107 Miscellaneous Equipment Allowance. That portion of the GVWR or GCWR allocated for the weight of the miscellaneous equipment and its mounting brackets, boards, or trays.

3.3.108 Mobile Foam Fire Apparatus. Fire apparatus with a permanently mounted fire pump, foam proportioning system, and foam concentrate tank(s) whose primary purpose is for use in the control and extinguishment of flammable and combustible liquid fires in storage tanks and other flammable liquid spills.

3.3.109 Mobile Water Supply Apparatus (Tanker, Tender). A vehicle designed primarily for transporting (pickup, transporting, and delivering) water to fire emergency scenes to be applied by other vehicles or pumping equipment.

3.3.110 Momentary Switch. A switch that returns to the neutral position (off) when released.

3.3.111 Multiple Configuration. Variable configurations or positions of the aerial device (e.g., elevation, extension) in which a manufacturer's different rated load capacities are allowed.

3.3.112 National Hose Thread (NH). A standard screw thread that has dimensions for inside (female) and outside (male) fire hose connections as defined in NFPA 1963, *Standard for Fire Hose Connections*.

3.3.113* Net Pump Pressure. The sum of the discharge pressure and the suction lift converted to psi or kPa when pumping at draft, or the difference between the discharge pressure and the intake pressure when pumping from a hydrant or other source of water under positive pressure.

3.3.114 Neutral Conductor. The grounded current-carrying conductor of all electrical circuits.

3.3.115 Nozzle Reaction. Force that occurs when a water stream is discharged from the nozzle.

3.3.116 Operator's Panel. A panel containing gauges, switches, instruments, or controls where an operator can visually monitor the applicable functions.

3.3.117 Optical Center. The point specified by the optical warning device manufacturer of highest intensity when measuring the output of an optical warning device.

3.3.118 Optical Element. Any individual lamp or other light emitter within an optical source.

3.3.119 Optical Power. A unit of measure designated as candela-seconds/minute that combines the flash energy and flash rate of an optical source into one power measurement representing the true visual effectiveness of the emitted light.

3.3.120* Optical Source. Any single, independently mounted, light-emitting component in a lighting system.

3.3.121 Optical Warning Device. A manufactured assembly of one or more optical sources.

3.3.122 Override. A system or device used to neutralize a given action or motion.

3.3.123 Override (Aerial Device). The takeover of all aerial device movement control functions by an operator at a second control station.

3.3.124 Panelboard. A single panel or group of panel units designed for assembly in the form of a single panel, including buses and automatic overcurrent devices, and equipped with or without switches for the control of light, heat, or power circuits; designed to be placed in a cabinet or cutout box placed in or against a wall, partition, or other support; and accessible only from the front. [**70:**100]

3.3.125 Plate. A visual indication whether in pictorial or word format that provides instruction to the operator in the use of a component on the apparatus.

Copyright National Fire Protection Association
Provided by IHS under license with NFPA
No reproduction or networking permitted without license from IHS
Not for Resale

3.3.126* Portable Generator. A mechanically driven power source that can be removed from the fire apparatus and operated at a location that is remote from the fire apparatus.

3.3.127 Power Source. A device that produces line voltage electricity.

3.3.128 Power Supply Assembly. Any cord or distribution assembly that is partly comprised of the neutral conductor, grounding conductor, and line voltage conductors connected from the output terminals of the power source to the first main overcurrent protection device.

3.3.129 Powered Equipment Rack. A power-operated device that is intended to provide storage of hard suction hoses, ground ladders, or other equipment, generally in a location above apparatus compartments.

3.3.130* Preconnected Hose Line. A hose line that is stored on the apparatus already connected to an outlet on a pump and that can be charged by the activation of one discharge valve.

3.3.131 Proper(ly). In accordance with the manufacturer's specifications or as recommended by the manufacturer.

3.3.132 psi. Pounds per square inch.

3.3.133 PTO. Power takeoff.

3.3.134 Pump Operator's Panel. The area on a fire apparatus that contains the gauges, controls, and other instruments used for operating the pump.

3.3.135 Pump Operator's Position. The location from which the pump operator operates the pump.

3.3.136 Pumper. Fire apparatus with a permanently mounted fire pump of at least 750 gpm (3000 L/min) capacity, water tank, and hose body whose primary purpose is to combat structural and associated fires.

3.3.137 Purchaser. The authority having responsibility for the specification and acceptance of the apparatus.

3.3.138 Purchasing Authority. The agency that has the sole responsibility and authority for negotiating, placing, and, where necessary, modifying each and every solicitation, purchase order, or other award issued by a governing body.

3.3.139 Purification System. A combination of mechanical, chemical, and physical devices such as separators, filters, adsorbents, and catalysts designed to remove or alter contaminants within the compressed air stream to produce effluent air that is breathable.

3.3.140 Qualified Person. A person who, by possession of a recognized degree, certificate, professional standing, or skill, and who, by knowledge, training, and experience, has demonstrated the ability to deal with problems relating to a particular subject matter, work, or project. [**1451:**3.3]

3.3.141* Quint. Fire apparatus with a permanently mounted fire pump, a water tank, a hose storage area, an aerial ladder or elevating platform with a permanently mounted waterway, and a complement of ground ladders.

3.3.142 Ramp Breakover Angle. The angle measured between two (2) lines tangent to the front and rear tire static loaded radius, and intersecting at a point on the underside of the vehicle that defines the largest ramp over which the vehicle can drive without the ramp touching the underside of the vehicle.

3.3.143 Rated Capacity (Aerial Device). The total amount of weight of all personnel and equipment that can be supported at the outermost rung of an aerial ladder or on the platform of an elevating platform with the waterway uncharged.

3.3.144 Rated Capacity (Water Pump). The flow rate to which the pump manufacturer certifies compliance of the pump when it is new.

3.3.145 Readily Accessible. Able to be located, reached, serviced, or removed without removing other components or parts of the apparatus and without the need to use special tools to open enclosures.

3.3.146 Removable Winch. A winch with quick disconnects for power and controls that can be temporarily mounted on the apparatus at a permanently installed mounting receiver.

3.3.147 Reserve Capacity. The ability of a battery to sustain a minimum electrical load in the event of a charging system failure or a prolonged charging system deficit.

3.3.148 Road Spray Location. Any underbody or underchassis location that is subject to road spray.

3.3.149 SCBA Fill Hose. Flexible hose plumbed to connect SCBA cylinders to the compressed air supply for filling purposes.

3.3.150 SCBA Fill Station. A containment enclosure for refilling self-contained breathing cylinders to guard personnel from fragments due to accidental cylinder rupture.

3.3.151 Sign. A visual indication whether in pictorial or word format that provides a warning to the operator or other persons near the apparatus.

3.3.152 Slow-Operating Valve. A valve that has a mechanism to prevent movement of the flow-regulating element from the fully closed position to the fully opened position or vice versa in less than 3 seconds.

3.3.153* Special Services Fire Apparatus. A multipurpose vehicle that primarily provides support services at emergency scenes.

3.3.154 Split Shaft PTO. A power takeoff (PTO) drive system that is inserted between the chassis transmission and the chassis drive axle and that has the shift mechanism necessary to direct the chassis engine power either to the drive axle or to a fire pump or other accessory.

3.3.155 Stabilizer. A device integral with or separately attached to the chassis of a fire apparatus with an aerial device that is used to increase the moments tending to resist overturning the apparatus.

3.3.156 Stabilizer Pad. A plate inserted beneath a stabilizer shoe to give greater surface bearing area.

3.3.157 Stabilizer Shoe. A permanently mounted shoe on a stabilizer to provide a ground surface area.

3.3.158* Standard Cubic Feet per Minute (SCFM). An expression of airflow rate in which the airflow rate is corrected to standard temperature and pressure.

3.3.159 Suction Lift. The sum of the vertical lift and the friction and entrance loss caused by the flow through the intake strainers and hose expressed in feet of water (meters of water) head.

3.3.160 Sump. A recessed area of a tank assembly designed primarily to entrap sludge or debris for removal and to serve as a central liquid collection point.

Copyright National Fire Protection Association
Provided by IHS under license with NFPA
No reproduction or networking permitted without license from IHS
Not for Resale

3.3.161 Swash Partition. A vertical wall within a tank structure designed to control the unwanted movement of the fluid within that tank.

3.3.162 Switch. Any set of contacts that interrupts or controls current flow through an electrical circuit.

3.3.163 Synthetic Breathing Air. A manufactured breathing air that is produced by blending nitrogen and oxygen. [**1989:**3.3]

3.3.164 Top Rail. The top chord (rail) of an aerial ladder to which reinforcements are attached.

3.3.165 Total Continuous Electrical Load. The total current required to operate all of the devices permanently connected to the apparatus that can be simultaneously energized excluding intermittent-type loads such as primers and booster reel rewind motors.

3.3.166* Turning Clearance Radius. One-half the larger of the left or right full circle wall-to-wall turning diameter.

3.3.167* Turntable. A structural component that connects the aerial device to the chassis and stabilization system through a rotating bearing that permits 360-degree continuous rotation of the aerial device.

3.3.168 Turntable Alignment Indicator. An indicator that facilitates alignment of the aerial device with the boom support for bedding purposes.

3.3.169* Type 4 Rating. A rating for electrical equipment that is intended for outdoor use because it provides a degree of protection from falling rain, splashing water, and hose-directed water.

3.3.170 Ultimate Strength. The strength of a material in tension, compression, or shear, respectively, that is the maximum tensile, compressive, or shear stress that the material can sustain, calculated on the basis of the ultimate load and the original or unrestrained dimensions.

3.3.171 Unequipped Fire Apparatus. The completed fire apparatus excluding personnel, agent(s), and any equipment removable without the use of tools.

3.3.172 Utility Air. Air used for purposes other than human respiration.

3.3.173 Vibration Isolation. Isolation materials used to prevent structure-borne vibrations from reaching attached surfaces.

3.3.174 Water Tower. An aerial device consisting of permanently mounted power-operated booms and a waterway designed to supply a large capacity mobile elevated water stream. The booms can be of articulating design or telescoping design.

3.3.175 Wet Location. A nonsheltered location inside a compartment with a door or cover that, while open, exposes the electrical enclosure or panelboard to the same environmental conditions as the exterior of the fire apparatus. A location on a nonenclosed, exterior surface of a fire apparatus body or driving and crew compartment where the enclosure or panel is exposed to the environment. *(See also 3.3.148, Road Spray Location.)*

3.3.176 Yield Strength. The stress at which a material exhibits a specified permanent deformation or set.

Chapter 4 General Requirements

4.1 General. All fire apparatus shall meet the requirements of the following chapters:

(1) Chapter 1, "Administration"
(2) Chapter 2, "Referenced Publications"
(3) Chapter 3, "Definitions"
(4) Chapter 4, "General Requirements"
(5) Chapter 12, "Chassis and Vehicle Components"
(6) Chapter 13, "Low Voltage Electrical Systems and Warning Devices"
(7) Chapter 14, "Driving and Crew Areas"
(8) Chapter 15, "Body, Compartments, and Equipment Mounting"

4.2 Requirements by Apparatus Type.

4.2.1 In addition to the requirements in Section 4.1 the following also shall apply:

(1) Pumper fire apparatus shall comply with Chapter 5.
(2) Initial attack fire apparatus shall comply with Chapter 6.
(3) Mobile water supply fire apparatus shall comply with Chapter 7.
(4) Aerial fire apparatus shall comply with Chapter 8.
(5) Quint fire apparatus shall comply with Chapter 9.
(6) Special service fire apparatus shall comply with Chapter 10.
(7) Mobile foam fire apparatus shall comply with Chapter 11.

4.2.2 Table 4.2.2 shows the required chapters that shall apply to the construction of the types of fire apparatus in 4.2.1.

4.2.3 In addition to the types of fire apparatus listed in 4.2.1, other types of fire apparatus shall be permitted by combining the requirements for the components to be used in the apparatus as defined in Section 4.5 with the requirements listed in Section 4.1.

4.3 Responsibility of Purchaser.

4.3.1* It shall be the responsibility of the purchaser to specify the following details of the apparatus:

(1) Its required performance, including where operations at elevations above 2000 ft (600 m) or on grades greater than 6 percent are required
(2) The maximum number of fire fighters to ride within the apparatus
(3) Specific electrical loads that are to be part of the minimum continuous electrical load defined in 13.3.3
(4) Any hose, ground ladders, or equipment to be carried by the apparatus that exceed the minimum requirements of this standard

4.3.2 After delivery of the fire apparatus, the purchaser shall be responsible for ongoing training of its personnel to proficiency regarding the proper and safe use of the apparatus and associated equipment as defined in NFPA 1002, *Standard for Fire Apparatus Driver/Operator Professional Qualifications*, and NFPA 1500, *Standard on Fire Department Occupational Safety and Health Program*.

4.4 Responsibility of Contractor.

4.4.1 The contractor shall provide a detailed description of the apparatus, a list of equipment to be furnished, and other construction and performance details to which the apparatus shall conform.

4.4.1.1 The detailed description of the apparatus shall include, but shall not be limited to, estimated weight, wheelbase, turning clearance radius, principal dimensions, transmission, axle ratios, and, if applicable, the rated capacity of the aerial device.

Copyright National Fire Protection Association
Provided by IHS under license with NFPA
No reproduction or networking permitted without license from IHS
Not for Resale

Table 4.2.2 Chapter Requirements by Apparatus

Chapter	Pumper Fire Apparatus	Initial Attack Fire Apparatus	Mobile Water Supply Fire Apparatus	Aerial Fire Apparatus	Quint Fire Apparatus	Special Service Fire Apparatus	Mobile Foam Fire Apparatus
1. Administration	Required	Required	Required	Required	Required	Required	Required
2. Referenced Publications	Required	Required	Required	Required	Required	Required	Required
3. Definitions	Required	Required	Required	Required	Required	Required	Required
4. General Requirements	Required	Required	Required	Required	Required	Required	Required
5. Pumper Fire Apparatus	Required	N/A	N/A	N/A	N/A	N/A	N/A
6. Initial Attack Fire Apparatus	N/A	Required	N/A	N/A	N/A	N/A	N/A
7. Mobile Water Supply Fire Apparatus	N/A	N/A	Required	N/A	N/A	N/A	N/A
8. Aerial Fire Apparatus	N/A	N/A	N/A	Required	N/A	N/A	N/A
9. Quint Fire Apparatus	N/A	N/A	N/A	N/A	Required	N/A	N/A
10. Special Service Fire Apparatus	N/A	N/A	N/A	N/A	N/A	Required	N/A
11. Mobile Foam Fire Apparatus	N/A	N/A	N/A	N/A	N/A	N/A	Required
12. Chassis and Vehicle Components	Required	Required	Required	Required	Required	Required	Required
13. Low Voltage Electrical Systems and Warning Devices	Required	Required	Required	Required	Required	Required	Required
14. Driving and Crew Areas	Required	Required	Required	Required	Required	Required	Required
15. Body, Compartments, and Equipment Mounting	Required	Required	Required	Required	Required	Required	Required
16. Fire Pumps and Associated Equipment	Required	Required	If specified	If specified	Required	If specified	Required
17. Auxiliary Pumps and Associated Equipment	If specified	If specified	If specified	If specified	If specified	If specified	If specified
18. Industrial Supply Pumps and Associated Equipment	N/A	N/A	N/A	N/A	N/A	N/A	If specified
19. Water Tanks	Required	Required	Required	If specified	Required	If specified	If specified
20. Aerial Devices	If specified	If specified	N/A	Required	Required	If specified	If specified
21. Foam Proportioning Systems	If specified	If specified	If specified	If specified	If specified	If specified	Required
22. Compressed Air Foam Systems	If specified	If specified	If specified	If specified	If specified	If specified	If specified
23. Line Voltage Electrical Systems	If specified	If specified	If specified	If specified	If specified	If specified	If specified
24. Command and Communications	If specified	If specified	If specified	If specified	If specified	If specified	If specified
25. Air Systems	If specified	If specified	If specified	If specified	If specified	If specified	If specified
26. Winches	If specified	If specified	If specified	If specified	If specified	If specified	If specified

Copyright National Fire Protection Association
Provided by IHS under license with NFPA
No reproduction or networking permitted without license from IHS
Not for Resale

4.4.1.2 The purpose of these contractor specifications shall be to define what the contractor intends to furnish and deliver to the purchaser.

4.4.2 Responsibility for the apparatus and equipment shall remain with the contractor until they are accepted by the purchaser.

4.4.3 On initial delivery of the fire apparatus, the contractor shall supply a qualified representative to demonstrate the apparatus and provide initial instruction to representatives of the purchaser regarding the operation, care, and maintenance of the apparatus and equipment supplied.

4.5 Fire Apparatus Components. All components shall be installed in accordance with the applicable manufacturer's installation instructions.

4.5.1 Fire Pump. If the apparatus is equipped with a fire pump, the pump and its associated equipment shall meet the requirements of Chapter 16.

4.5.2 Auxiliary Pump. If the apparatus is equipped with an auxiliary pump, the pump and its associated equipment shall meet the requirements of Chapter 17.

4.5.3 Industrial Supply Pump. If the apparatus is equipped with an industrial supply pump, the pump and its associated equipment shall meet the requirements of Chapter 18.

4.5.4 Water Tank. If the apparatus is equipped with a water tank, the water tank shall meet the requirements of Chapter 19.

4.5.5 Aerial Device. If the apparatus is equipped with an aerial device (aerial ladder, elevating platform, or water tower), the aerial device shall meet the requirements of Chapter 20.

4.5.6 Foam Proportioning System. If the apparatus is equipped with a foam proportioning system, the system shall meet the requirements of Chapter 21.

4.5.7 Compressed Air Foam System (CAFS). If the apparatus is equipped with a compressed air foam system (CAFS), the system shall meet the requirements of Chapter 22.

4.5.8 Line Voltage Electrical System. If the apparatus is equipped with a line voltage electrical system, the system shall meet the requirements of Chapter 23.

4.5.9 Command and Communications. If the apparatus is equipped with a command and communications area, the area shall meet the requirements of Chapter 24.

4.5.10 Air System. If the apparatus is equipped with an air system, the system shall meet the requirements of Chapter 25.

4.5.11 Winch System. If the apparatus is equipped with a winch system, the system shall meet the requirements of Chapter 26.

4.6 Legal Requirements. The apparatus and all component parts shall comply with all applicable federal and state or provincial laws and regulations.

4.7 Third-Party Certification of Test Results. Where this standard requires the results of tests to be certified by a independent third-party certification organization, that organization shall meet the requirements of this section.

4.7.1 All certification shall be performed by a certification organization that is accredited for testing systems on fire apparatus in accordance with ANSI Z34.1, *Standard for Third-Party Certification Programs for Products, Processes, and Services.*

4.7.2 The certification organization shall not be owned or controlled by manufacturers or vendors of the product that is being tested.

4.7.3 The certification organization shall be primarily engaged in certification work and shall not have a monetary interest in the product's ultimate profitability.

4.7.4 The certification organization shall witness all tests and shall refuse to certify any test results for a system if all components of that system requiring testing do not pass the testing required by this standard.

4.7.5 There shall be no conditional, temporary, or partial certification of test results.

4.7.6 Appropriate forms or data sheets shall be provided and used during the testing.

4.7.7 Programs shall be in place for training, proficiency testing, and performance verification of any staff involved with certification.

4.7.8 The certification organization's operating procedures shall provide a mechanism for the manufacturer to appeal decisions. The procedures shall include provisions for the presentation of information from representatives of both sides of a controversy to a designated appeals panel.

4.8 Manufacturer Certification of Test Results. Where this standard requires the results of tests or the performance of a component to be certified by the manufacturer, the manufacturer shall meet the requirements of this section.

4.8.1 A representative of the manufacturer shall witness all tests and shall refuse to certify any test results for a system if all components of that system requiring testing do not pass the testing required by this standard.

4.8.2 There shall be no conditional, temporary, or partial certification of test results.

4.8.3 The manufacturer shall have the facilities and equipment necessary to conduct the required testing, a program for the calibration of all instruments, and procedures to ensure the proper control of all testing.

4.8.4 Appropriate forms or data sheets shall be provided and used during the testing.

4.8.5 Programs shall be in place for training, proficiency testing, and performance verification of any staff involved with certification.

4.8.6 An official of the company that manufactures or installs the product shall designate in writing who is qualified to witness tests and certify results.

4.9 Personnel Protection.

4.9.1* Guards, shields, or other protection shall be provided where necessary in order to prevent injury of personnel by hot, moving, or rotating parts during nonmaintenance operations.

4.9.2 Electrical insulation or isolation shall be provided where necessary in order to prevent electrical shock from onboard electrical systems.

4.9.3 Vehicular workmanship shall ensure an operating environment free of accessible sharp projections and edges.

4.9.4 Safety-related (caution, warning, danger) signs shall meet the requirements of ANSI Z535.4, *Product Safety Signs and Labels.*

Copyright National Fire Protection Association
Provided by IHS under license with NFPA
No reproduction or networking permitted without license from IHS
Not for Resale

4.10 Controls and Instructions.

4.10.1 Illumination shall be provided for controls, switches, instruction plates, gauges, and instruments necessary for the operation of the apparatus and the equipment provided on it.

4.10.1.1 If external illumination is provided, it shall be a minimum of 5 fc (50 lx) on the face of the device.

4.10.1.2 If internal illumination is provided, it shall be a minimum of 4 footlamberts (14 candela/m^2).

4.10.2* All required signs, plates, and labels shall be permanent in nature and securely attached and shall meet the requirements of 4.9.4 and UL 969, *Standard for Marking and Labeling Systems*.

4.10.2.1 The signs, plates, and labels shall have resistance to damage from temperatures between –30°F and 176°F (–35°C and 80°C) and exposure to oil, fuel, water, hydraulic fluids, or other fluids used on the apparatus.

4.10.2.2 The exterior mounted labels relating to safety or critical operational instructions shall be reflective or lighted as required by 4.10.1.

4.10.3 No gauge or visual display shall be more than 84 in. (2.1 m) above the level where the operator stands to read the instrument.

4.10.4 The central midpoint or centerline of any control shall be no more than 72 in. (1800 mm) vertically above the ground or platform that is designed to serve as the operator's standing position.

4.11 Component Protection.

4.11.1* Hydraulic hose lines, air system tubing, control cords, and electrical harnesses shall be mechanically attached to the frame or body structure of the apparatus.

4.11.2 The type of equipment described in 4.11.1 shall be furnished with protective looms, grommets, or other devices at each point where they pass through body panels or structural members or wherever they lie against a sharp metal edge.

4.11.3 A through-the-frame connector shall be permitted to be used in place of metal protective looms or grommets.

4.12 Vehicle Stability.

4.12.1 When the fire apparatus is loaded to its maximum in-service weight, the height of the vehicle's center of gravity shall not exceed the chassis manufacturer's maximum limit.

4.12.2 Weight Distribution.

4.12.2.1* When the fire apparatus is loaded to its maximum in-service weight, the front-to-rear weight distribution of the fire apparatus as defined in Section 12.1 shall be within the limits set by the chassis manufacturer.

4.12.2.2 The front axle loads shall not be less than the minimum axle loads specified by the chassis manufacturer under full load and all other loading conditions.

4.12.2.3 Load Distribution.

4.12.2.3.1* Using the information supplied by the purchaser, the apparatus manufacturer shall calculate the load distribution for the apparatus.

4.12.2.3.2 The manufacturer shall engineer the fire apparatus to comply with the gross axle weight ratings (GAWR), the overall gross vehicle weight rating (GVWR), and the chassis manufacturer's load balance guidelines.

4.12.2.3.3* The fire apparatus, as supplied by the manufacturer, shall have a side-to-side tire load variation of no more than 7 percent of the total tire load for that axle or the limits allowed by the axle or component manufacturer.

4.13 Apparatus Performance.

4.13.1* The apparatus shall meet the requirements of this standard at elevations of 2000 ft (600 m) above sea level.

4.13.2* The apparatus shall meet all the requirements of this standard while stationary on a grade of 6 percent in any direction.

4.13.3* The apparatus shall meet the requirements of this standard in ambient temperature conditions between 32°F (0°C) and 110°F (43°C).

4.14 Roadability.

4.14.1 The apparatus, when fully equipped and loaded as defined in Section 12.1, shall be capable of the following performance while on dry, paved roads that are in good condition:

(1) From a standing start, the apparatus shall be able to attain a speed of 35 mph (55 kmph) within 25 seconds on a level road.
(2)*The apparatus shall be able to attain a minimum top speed of 50 mph (80 kmph) on a level road.
(3)*The apparatus shall be able to maintain a speed of at least 20 mph (30 kmph) on any grade up to and including 6 percent.

4.14.2* The maximum top speed of the apparatus shall not exceed the tire manufacturer's maximum speed rating for the tires installed on the apparatus.

4.15 Serviceability.

4.15.1* The apparatus shall be designed so that all the manufacturer's recommended routine maintenance checks of lubricant and fluid levels can be performed by the operator without lifting the cab of a tilt-cab apparatus or without the need for hand tools.

4.15.2 Where special tools are required for routine service on any component of the apparatus, such tools shall be provided with the apparatus.

4.15.3 Apparatus components that interfere with repair or removal of other major components shall be attached with fasteners, such as capscrews and nuts, so that the components can be removed and installed with ordinary hand tools. These components shall not be welded or otherwise permanently secured into place.

4.16 Road Tests.

4.16.1 Road tests shall be conducted in accordance with this section to verify that the completed apparatus is capable of compliance with Section 4.14.

4.16.2 The tests shall be conducted at a location and in a manner that does not violate local, state or provincial, or federal traffic laws.

4.16.3 The tests shall be conducted on dry, level, paved roads that are in good condition.

Copyright National Fire Protection Association
Provided by IHS under license with NFPA
No reproduction or networking permitted without license from IHS
Not for Resale

4.16.4 The apparatus shall be fully equipped and loaded as required in Section 12.1.

4.16.5 The engine shall not be operated in excess of the maximum governed speed.

4.16.6 Acceleration tests shall consist of two runs in opposite directions over the same route.

4.16.6.1 The fire apparatus shall attain a speed of 35 mph (55 kmph) from a standing start within 25 seconds.

4.16.6.2 The fire apparatus shall attain a minimum top speed of 50 mph (80 kmph).

4.16.7 If the apparatus is equipped with an auxiliary braking system, the manufacturer shall road test the system to confirm that the system is functioning as intended by the auxiliary braking system manufacturer.

4.16.8 If the apparatus is equipped with an air brake system, the service brakes shall bring the apparatus, when loaded to its maximum in-service weight, to a complete stop from an initial speed of 20 mph (32.2 kmph), in a distance not exceeding 35 ft (10.7 m) by actual measurement on a paved, level, dry surface road that is free of loose material, oil, or grease.

4.16.9 If the apparatus is equipped with a hydraulic brake system, the service brakes shall bring the apparatus, when loaded to its maximum in-service weight, to a complete stop from an initial speed of 30 mph (48.2 kmph), in a distance not exceeding 88 ft (26.8 m) by actual measurement on a paved, level, dry surface road that is free of loose material, oil, or grease.

4.17 Tests on Delivery.

4.17.1* If acceptance tests are required at the point of delivery, the purchaser shall specify the details of the tests to be performed and they shall not be performed in a manner that requires the apparatus or a component to operate outside its designed operating range.

4.17.2 Aerial device stability tests shall not be run other than at the manufacturer's facility.

4.18* Documentation. Any documentation provided with the apparatus shall be permitted to be in printed format, electronic format, audiovisual format, or a combination thereof.

4.19 Data Required of the Contractor.

4.19.1 Fire Apparatus Documentation. The contractor shall supply, at the time of delivery, at least one copy of the following documents:

(1) The manufacturer's record of apparatus construction details, including the following information:
   (a) Owner's name and address
   (b) Apparatus manufacturer, model, and serial number
   (c) Chassis make, model, and serial number
   (d) GAWR of front and rear axles
   (e) Front tire size and total rated capacity in pounds (kilograms)
   (f) Rear tire size and total rated capacity in pounds (kilograms)
   (g) Chassis weight distribution in pounds (kilograms) with water and manufacturer-mounted equipment (front and rear)
   (h) Engine make, model, serial number, rated horsepower and related speed, and governed speed
   (i) Type of fuel and fuel tank capacity
   (j) Electrical system voltage and alternator output in amps
   (k) Battery make, model, and capacity in cold cranking amps (CCA)
   (l) Chassis transmission make, model, and serial number; and if so equipped, chassis transmission PTO(s) make, model, and gear ratio
   (m) Pump make, model, rated capacity in gallons per minute (liters per minute where applicable), and serial number
   (n) Pump transmission make, model, serial number, and gear ratio
   (o) Auxiliary pump make, model, rated capacity in gallons per minute (liters per minute where applicable), and serial number
   (p) Water tank certified capacity in gallons or liters
   (q) Aerial device type, rated vertical height in feet (meters), rated horizontal reach in feet (meters), and rated capacity in pounds (kilograms)
   (r) Paint manufacturer and paint number(s)
   (s) Company name and signature of responsible company representative
(2) Certification of slip resistance of all stepping, standing, and walking surfaces *(see 15.7.3.5)*
(3) If the apparatus has a fire pump or an industrial supply pump, the pump manufacturer's certification of suction capability *(see 16.2.4.1 or 18.2.4.1)*
(4) If the apparatus has a fire pump or an industrial supply pump, a copy of the apparatus manufacturer's approval for stationary pumping applications *(see 16.3.1 or 18.3.1)*
(5) If the apparatus has a fire pump or an industrial supply pump, the engine manufacturer's certified brake horsepower curve for the engine furnished, showing the maximum governed speed *(see 16.3.2.2 or 18.3.2.2)*
(6) If the apparatus has a fire pump or an industrial supply pump, the pump manufacturer's certification of the hydrostatic test *(see 16.5.2.2 or 18.5.2.2)*
(7) If the apparatus has a fire pump or an industrial supply pump, the certification of inspection and test for the fire pump *(see 16.13.1.1.3)* or the industrial supply pump *(see 18.13.1.1.3)*
(8) If the apparatus has an aerial device, the certification of inspection and test for the aerial device *(see Section 20.24)*
(9) If the apparatus has an aerial device, all the technical information required for inspections to comply with NFPA 1914, *Standard for Testing Fire Department Aerial Devices*
(10) If the apparatus has a fixed line voltage power source, the certification of the test for the fixed power source *(see 23.16.5.2)*
(11) If the apparatus is equipped with an air system, test results of the air quality *(see 25.14.4)*, the SCBA fill station *(see 25.9.5)*, and the air system installation *(see 25.14)*
(12) Weight documents from a certified scale showing actual loading on the front axle, rear axle(s), and overall fire apparatus (with the water tank full but without personnel, equipment, and hose)
(13) Written load analysis and results of the electrical system performance tests required in Chapter 13
(14) When the apparatus is equipped with a water tank, the certification of water tank capacity *(see Section 19.6)*

4.19.2 Operations and Service Documentation.

4.19.2.1 The contractor shall supply, at time of delivery, at least two sets of complete operation and service documentation covering the completed apparatus as delivered and accepted.

Copyright National Fire Protection Association
Provided by IHS under license with NFPA
No reproduction or networking permitted without license from IHS
Not for Resale

4.19.2.2 The documentation shall address at least the inspection, service, and operations of the fire apparatus and all major components thereof.

4.19.2.3 The contractor shall also provide documentation of the following items for the entire apparatus and each major operating system or major component of the apparatus:

(1) Manufacturer's name and address
(2) Country of manufacture
(3) Source for service and technical information
(4) Parts replacement information
(5) Descriptions, specifications, and ratings of the chassis, pump (if applicable), and aerial device (if applicable)
(6) Wiring diagrams for low voltage and line voltage systems to include the following information:
  (a) Pictorial representations of circuit logic for all electrical components and wiring
  (b) Circuit identification
  (c) Connector pin identification
  (d) Zone location of electrical components
  (e) Safety interlocks
  (f) Alternator-battery power distribution circuits
  (g)*Input/output assignment sheets or equivalent circuit logic implemented in multiplexing systems
(7) Lubrication charts
(8) Operating instructions for the chassis, any major components such as a pump or aerial device, and any auxiliary systems
(9) Precautions related to multiple configurations of aerial devices, if applicable
(10) Instructions regarding the frequency and procedure for recommended maintenance
(11) Overall apparatus operating instructions
(12) Safety considerations
(13) Limitations of use
(14) Inspection procedures
(15) Recommended service procedures
(16) Troubleshooting guide
(17) Apparatus body, chassis, and other component manufacturer's warranties
(18) Special data required by this standard
(19) Copies of required manufacturer test data or reports, manufacturer certifications, and independent third-party certifications of test results
(20) A material safety data sheet (MSDS) for any fluid that is specified for use on the apparatus

4.19.2.4* The contractor shall deliver with the apparatus all manufacturers' operations and service documents supplied with components and equipment that are installed or supplied by the contractor.

Chapter 5 Pumper Fire Apparatus

5.1 General. If the apparatus is to function as a pumper, it shall meet the requirements of this chapter.

5.2 Fire Pump. The apparatus shall be equipped with a fire pump that meets the requirements of Chapter 16 and that has a minimum rated capacity of 750 gpm (3000 L/min).

5.3 Aerial Device. If the pumper is equipped with an aerial device, the requirements of 5.3.1 through 5.3.4 shall apply.

5.3.1 The aerial device shall meet the requirements of Chapter 20.

5.3.2 If the aerial device is equipped with a permanently mounted waterway, the fire pump shall be capable of supplying the flow requirements of 20.6.1, 20.12.1, or 20.16.1 with a maximum intake gauge pressure of 20 psi (150 kPa).

5.3.3 Provisions shall be made to ensure that the pump operator is not in contact with the ground.

5.3.4 Signs shall be placed to warn the pump operator of electrocution hazards.

5.4* Water Tank. The pumper shall be equipped with a water tank(s) that meets the requirements of Chapter 19 and that has a minimum certified capacity (combined, if applicable) of 300 gal (1100 L).

5.5* Equipment Storage. A minimum of 40 ft^3 (1.1 m^3) of enclosed weather-resistant compartmentation that meets the requirements of Section 15.1 shall be provided for the storage of equipment.

5.6* Hose Storage. Hose bed area(s), compartments, or reels that comply with Section 15.10 shall be provided to accommodate the following:

(1) A minimum hose storage area of 30 ft^3 (0.8 m^3) for 2½ in. (65 mm) or larger fire hose
(2) Two areas, each a minimum of 3.5 ft^3 (0.1 m^3), to accommodate 1½ in. (38 mm) or larger preconnected fire hose lines

5.7* Equipment Supplied by the Contractor. The contractor shall supply the equipment listed in 5.7.1 and 5.7.2 and shall provide and install such brackets or compartments as are necessary to mount the equipment.

5.7.1 Ground Ladders.

5.7.1.1 All ground ladders carried on the apparatus shall meet the requirements of NFPA 1931, *Standard on Design of and Design Verification Tests for Fire Department Ground Ladders.*

5.7.1.2* At a minimum, the following ladders shall be carried on the apparatus:

(1) One straight ladder equipped with roof hooks
(2) One extension ladder
(3) One attic ladder

5.7.2 Suction Hose.

5.7.2.1 A minimum of 15 ft (4.5 m) of soft suction hose or 20 ft (6 m) of hard suction hose shall be carried.

5.7.2.1.1 Where hard suction hose is provided, a suction strainer shall be furnished.

5.7.2.1.2 Where hard suction hose is provided, the friction and entrance loss of the combination suction hose and strainer shall not exceed the losses listed in Table 16.2.4.1(b) or Table 16.2.4.1(c).

5.7.2.1.3 Where soft suction hose is provided, it shall have couplings compatible with the local hydrant outlet connection on one end and the pump intake connection on the other end.

5.7.2.2 Suction hose shall meet the requirements of NFPA 1961, *Standard on Fire Hose.*

5.7.2.3* The purchaser shall specify whether hard or soft suction hose is to be provided, the length and size of the hose, the type and size of the couplings, the manner in which the suction hose is to be carried on the apparatus, and the style of brackets desired.

Copyright National Fire Protection Association
Provided by IHS under license with NFPA
No reproduction or networking permitted without license from IHS
Not for Resale

5.8* Minor Equipment.

5.8.1 General. The equipment listed in 5.8.2 and 5.8.3 shall be available on the pumper fire apparatus before the apparatus is placed in service.

5.8.1.1 Brackets or compartments shall be furnished so as to organize and mount the specified equipment.

5.8.1.2 A detailed list of who is to furnish the items and the method for organizing and mounting these items shall be supplied by the purchasing authority.

5.8.2* Fire Hose and Nozzles. The following fire hose and nozzles shall be carried on the apparatus:

(1) 800 ft (240 m) of 2½ in. (65 mm) or larger fire hose
(2) 400 ft (120 m) of 1½ in. (38 mm), 1¾ in. (45 mm), or 2 in. (52 mm) fire hose
(3) One combination spray nozzle, 200 gpm (750 L/min) minimum
(4) Two combination spray nozzles, 95 gpm (360 L/min) minimum
(5) One playpipe, with shutoff and 1 in. (25 mm), 1⅛ in. (29 mm), and 1¼ in. (32 mm) tips

5.8.3* Miscellaneous Equipment. The following additional equipment shall be carried on the apparatus:

(1) One 6 lb (2.7 kg) flathead axe mounted in a bracket fastened to the apparatus
(2) One 6 lb (2.7 kg) pickhead axe mounted in a bracket fastened to the apparatus
(3) One 6 ft (2 m) pike pole or plaster hook mounted in a bracket fastened to the apparatus
(4) One 8 ft (2.4 m) or longer pike pole mounted in a bracket fastened to the apparatus
(5) Two portable hand lights mounted in brackets fastened to the apparatus
(6) One approved dry chemical portable fire extinguisher with a minimum 80-B:C rating mounted in a bracket fastened to the apparatus
(7) One 2½ gal (9.5 L) or larger water extinguisher mounted in a bracket fastened to the apparatus
(8) One self-contained breathing apparatus (SCBA) complying with NFPA 1981, *Standard on Open-Circuit Self-Contained Breathing Apparatus for Fire and Emergency Services*, for each assigned seating position, but not fewer than four, mounted in brackets fastened to the apparatus or stored in containers supplied by the SCBA manufacturer
(9) One spare SCBA cylinder for each SCBA carried, each mounted in a bracket fastened to the apparatus or stored in a specially designed storage space
(10) One first aid kit
(11) Four combination spanner wrenches mounted in brackets fastened to the apparatus
(12) Two hydrant wrenches mounted in brackets fastened to the apparatus
(13) One double female 2½ in. (65 mm) adapter with National Hose threads, mounted in a bracket fastened to the apparatus
(14) One double male 2½ in. (65 mm) adapter with National Hose threads, mounted in a bracket fastened to the apparatus
(15) One rubber mallet, suitable for use on suction hose connections, mounted in a bracket fastened to the apparatus
(16) Two salvage covers each a minimum size of 12 ft × 14 ft (3.7 m × 4.3 m)
(17) Two wheel chocks, mounted in readily accessible locations, each designed to hold the apparatus, when loaded to its maximum in-service weight, on a 10 percent grade with the transmission in neutral and the parking brake released

5.8.3.1 If the supply hose carried does not use sexless couplings, an additional double female adapter and double male adapter, sized to fit 2½ in. (65 mm) or larger fire hose, shall be carried mounted in brackets fastened to the apparatus.

5.8.3.2 If none of the pump intakes required by 16.6.1 are valved, a hose appliance that is equipped with one or more gated intakes with female swivel connection(s) compatible with the supply hose used on one side and a swivel connection with pump intake threads on the other side shall be carried. Any intake connection 3½ in. (90 mm) or larger shall include a pressure relief device that meets the requirements of 16.6.6.

5.8.3.3 If the pumper is equipped with an aerial device with a permanently mounted ladder, four ladder belts meeting the requirements of NFPA 1983, *Standard on Fire Service Life Safety Rope and System Components*, shall be provided.

Chapter 6 Initial Attack Fire Apparatus

6.1 General. If the apparatus is to function as an initial attack fire apparatus, it shall meet the requirements of this chapter.

6.2 Fire Pump. The apparatus shall be equipped with a fire pump that meets the requirements of Chapter 16 and that has a minimum rated capacity of 250 gpm (1000 L/min).

6.3 Water Tank. Initial attack apparatus shall be equipped with a water tank(s) that meets the requirements of Chapter 19 and that has a minimum certified capacity (combined, if applicable) of 200 gal (750 L).

6.4* Equipment Storage. A minimum of 22 ft^3 (0.6 m^3) of enclosed weather-resistant compartmentation that meets the requirements of Section 15.1 shall be provided for the storage of equipment.

6.5* Hose Storage. Hose bed area(s), compartments, or reels that meet the requirements of Section 15.10 shall be provided to accommodate the following:

(1) A minimum hose storage area of 10 ft^3 (0.3 m^3) for 2½ in. (65 mm) or larger fire hose
(2) Two areas, each a minimum of 3.5 ft^3 (0.1 m^3), to accommodate 1½ in. (38 mm) or larger preconnected fire hose lines

6.6* Equipment Supplied by the Contractor. The contractor shall supply the equipment listed in 6.6.1 and 6.6.2 and shall provide and install such brackets or compartments as are necessary to mount the equipment.

6.6.1 Ground Ladders.

6.6.1.1 A 12 ft (3.7 m) or longer combination or extension-type ground ladder shall be carried on the apparatus.

6.6.1.2 All ground ladders on the apparatus shall meet the requirements of NFPA 1931, *Standard on Design of and Design Verification Tests for Fire Department Ground Ladders.*

6.6.2 Suction Hose.

6.6.2.1 A minimum of 15 ft (4.5 m) of soft suction hose or 20 ft (6 m) of hard suction hose shall be carried.

Copyright National Fire Protection Association
Provided by IHS under license with NFPA
No reproduction or networking permitted without license from IHS
Not for Resale

6.6.2.1.1 Where hard suction hose is provided, a suction strainer shall be furnished.

6.6.2.1.2 Where hard suction hose is provided, the friction and entrance loss of the combination suction hose and strainer shall not exceed the losses listed in Table 16.2.4.1(b) or Table 16.2.4.1(c).

6.6.2.1.3 Where soft suction hose is provided, it shall have couplings compatible with the local hydrant outlet connection on one end and the pump intake connection on the other end.

6.6.2.2 Suction hose shall meet the requirements of NFPA 1961, *Standard on Fire Hose*.

6.6.2.3* The purchaser shall specify whether hard or soft suction hose is to be provided, the length and size of the hose, the type and size of the couplings, the manner in which the suction hose is to be carried on the apparatus, and the style of brackets desired.

6.7* Minor Equipment.

6.7.1 General. The equipment listed in 6.7.2 and 6.7.3 shall be available on the initial attack fire apparatus before the apparatus is placed in service.

6.7.1.1 Brackets or compartments shall be furnished so as to organize and mount the specified equipment.

6.7.1.2 A detailed list of who is to furnish the items and the method for organizing and mounting these items shall be supplied by the purchasing authority.

6.7.2 Fire Hose and Nozzles. The following fire hose and nozzles shall be carried on the apparatus:

(1) 300 ft (90 m) of 2½ in. (65 mm) or larger fire hose
(2) 400 ft (120 m) of 1½ in. (38 mm), 1¾ in. (45 mm), or 2 in. (52 mm) fire hose
(3) Two combination spray nozzles, 95 gpm (360 L/min) minimum

6.7.3* Miscellaneous Equipment. The following additional equipment shall be carried on the apparatus:

(1) One 6 lb (2.7 kg) pickhead axe mounted in a bracket fastened to the apparatus
(2) One 6 ft (2 m) pike pole or plaster hook mounted in a bracket fastened to the apparatus
(3) Two portable hand lights mounted in brackets fastened to the apparatus
(4) One approved dry chemical portable fire extinguisher with a minimum 80-B:C rating mounted in a bracket fastened to the apparatus
(5) One 2½ gal (9.5 L) or larger water extinguisher mounted in a bracket fastened to the apparatus
(6) One SCBA complying with NFPA 1981, *Standard on Open-Circuit Self-Contained Breathing Apparatus for Fire and Emergency Services*, for each assigned seating position, but not fewer than two, mounted in brackets fastened to the apparatus or stored in containers supplied by the SCBA manufacturer
(7) One spare SCBA cylinder for each SCBA carried, each mounted in a bracket fastened to the apparatus or stored in a specially designed storage space(s)
(8) One first aid kit
(9) Two combination spanner wrenches mounted in a bracket(s) fastened to the apparatus
(10) One hydrant wrench mounted in a bracket fastened to the apparatus
(11) One double female adapter, sized to fit 2½ in. (65 mm) or larger fire hose, mounted in a bracket fastened to the apparatus
(12) One double male adapter, sized to fit 2½ in. (65 mm) or larger fire hose, mounted in a bracket fastened to the apparatus
(13) One rubber mallet, for use on suction hose connections, mounted in a bracket fastened to the apparatus
(14) Two wheel chocks, mounted in readily accessible locations, each designed to hold the apparatus, when loaded to its maximum in-service weight, on a 10 percent grade with the transmission in neutral and the parking brake released

6.7.3.1 If none of the pump intakes required by 16.6.1 are valved, a hose appliance that is equipped with one or more gated intakes with female swivel connection(s) compatible with the supply hose used on one side and a swivel connection with pump intake threads on the other side shall be carried. Any intake connection 3½ in. (90 mm) or larger shall include a pressure relief device that meets the requirements of 16.6.6.

Chapter 7 Mobile Water Supply Fire Apparatus

7.1 General. If the apparatus is to function as a mobile water supply apparatus, it shall meet the requirements of this chapter.

7.2 Pump. If the apparatus is equipped with a fire pump, the pump shall meet the requirements of Chapter 16.

7.3 Water Tank. The mobile water supply apparatus shall be equipped with a water tank(s) that meets the requirements of Chapter 19 and that has a minimum certified capacity (combined, if applicable) of 1000 gal (4000 L).

7.4* Equipment Storage. A minimum of 20 ft^3 (0.6 m^3) of enclosed weather-resistant compartmentation meeting the requirements of Section 15.1 shall be provided for the storage of equipment.

7.5 Hose Storage.

7.5.1* A minimum hose storage area of 6 ft^3 (0.2 m^3) for 2½ in. (65 mm) or larger fire hose that meets the requirements of Section 15.10 shall be provided.

7.5.2 If the apparatus is equipped with a fire pump, two areas, each a minimum of 3.5 ft^3 (0.1 m^3), to accommodate 1½ in. (38 mm) or larger preconnected fire hose lines shall be provided.

7.6* Suction Hose. If the mobile water supply fire apparatus is equipped with a pump, the requirements in 7.6.1 through 7.6.3 shall apply.

7.6.1 A minimum of 15 ft (4.5 m) of soft suction hose or 20 ft (6 m) of hard suction hose shall be carried.

7.6.1.1 Where hard suction hose is provided, a suction strainer shall be furnished.

7.6.1.2 Where hard suction hose is provided, the friction and entrance loss of the combination suction hose and strainer shall not exceed the losses listed in Table 16.2.4.1(b) or Table 16.2.4.1(c).

7.6.1.3 Where soft suction hose is provided, it shall have couplings compatible with the local hydrant outlet connection on one end and the pump intake connection on the other end.

Copyright National Fire Protection Association
Provided by IHS under license with NFPA
No reproduction or networking permitted without license from IHS
Not for Resale

7.6.2 Suction hose shall meet the requirements of NFPA 1961, *Standard on Fire Hose*.

7.6.3* The purchaser shall specify whether hard or soft suction hose is to be provided, the length and size of the hose, the type and size of the couplings, the manner in which the suction hose is to be carried on the apparatus, and the style of brackets desired.

7.7* Minor Equipment.

7.7.1 The equipment listed in 7.7.2 and 7.7.3 shall be available on the initial attack fire apparatus before the apparatus is placed in service.

7.7.1.1 Brackets or compartments shall be furnished so as to organize and mount the specified equipment.

7.7.1.2 A detailed list of who is to furnish the items and the method for organizing and mounting these items shall be supplied by the purchasing authority.

7.7.2 Fire Hose and Nozzles.

7.7.2.1 The mobile water supply apparatus shall be equipped with at least 200 ft (60 m) of 2½ in. (65 mm) or larger fire hose.

7.7.2.2* If the mobile water supply apparatus is equipped with a fire pump, the following shall be provided:

(1) 400 ft (120 m) of 1½ in. (38 mm), 1¾ in. (45 mm), or 2 in. (52 mm) fire hose
(2) Two combination spray nozzles, 95 gpm (360 L/min) minimum

7.7.3 Equipment.

7.7.3.1* Mobile water supply fire apparatus shall be equipped with at least the following equipment:

(1) One 6 lb (2.7 kg) flathead or pickhead axe mounted in a bracket fastened to the apparatus
(2) One 6 ft (2 m) or longer pike pole or plaster hook mounted in a bracket fastened to the apparatus
(3) Two portable hand lights mounted in brackets fastened to the apparatus
(4) One approved dry chemical portable fire extinguisher with a minimum 80-B:C rating mounted in a bracket fastened to the apparatus
(5) One 2½ gal (9.5 L) or larger water extinguisher mounted in a bracket fastened to the apparatus
(6) One SCBA complying with NFPA 1981, *Standard on Open-Circuit Self-Contained Breathing Apparatus for Fire and Emergency Services*, for each assigned seating position, but not fewer than two, mounted in brackets fastened to the apparatus or stored in containers supplied by the SCBA manufacturer
(7) One spare SCBA cylinder for each SCBA carried, each mounted in a bracket fastened to the apparatus or stored in a specially designed storage space(s)
(8) One first aid kit
(9) Two combination spanner wrenches mounted in a bracket fastened to the apparatus
(10) One hydrant wrench mounted in a bracket fastened to the apparatus
(11) One double female adapter, sized to fit 2½ in. (65 mm) or larger fire hose, mounted in a bracket fastened to the apparatus
(12) One double male adapter, sized to fit 2½ in. (65 mm) or larger fire hose, mounted in a bracket fastened to the apparatus
(13) Two wheel chocks, mounted in readily accessible locations, each designed to hold the apparatus, when loaded to its maximum in-service weight, on a 10 percent grade with the transmission in neutral and the parking brake released

7.7.3.2 If the mobile water supply apparatus is equipped with a fire pump, and none of the pump intakes required by 16.6.1 are valved, a hose appliance that is equipped with one or more gated intakes with female swivel connection(s) compatible with the supply hose used on one side and a swivel connection with pump intake threads on the other side shall be carried. Any intake connection 3½ in. (90 mm) or larger shall include a pressure relief device that meets the requirements of 16.6.6.

7.7.3.3 If the mobile water supply apparatus is equipped with a fire pump, a rubber mallet for use on suction hose connections shall be carried in a bracket fastened to the apparatus.

Chapter 8 Aerial Fire Apparatus

8.1 General.

8.1.1 If the apparatus is to function as an aerial fire apparatus, it shall meet the requirements of this chapter.

8.1.2 If the apparatus is to function as a pumper with an aerial device, it shall meet all the requirements of Chapter 5 instead of Chapter 8.

8.2 Aerial Device. The apparatus shall be equipped with an aerial ladder, elevating platform, or water tower that meets the requirements of Chapter 20.

8.3* Fire Pump. If the apparatus is equipped with a fire pump, the pump shall meet the requirements of Chapter 16.

8.3.1 Provisions shall be made to ensure that the pump operator is not in contact with the ground.

8.3.2 Signs shall be placed to warn the pump operator of electrocution hazards.

8.3.3 If the aerial fire apparatus is equipped with a fire pump that is intended to supply water to a permanently mounted waterway, the fire pump shall be capable of supplying the flow requirements of 20.6.1, 20.12.1, or 20.16.1 with a maximum intake gauge pressure of 20 psi (150 kPa).

8.4 Water Tank. If the aerial fire apparatus is equipped with a water tank, it shall meet the requirements of Chapter 19.

8.5* Equipment Storage. A minimum of 40 ft^3 (1.1 m^3) of enclosed weather-resistant compartmentation meeting the requirements of Section 15.1 shall be provided for the storage of equipment.

8.6 Hose Storage.

8.6.1* Any space on the aerial fire apparatus designed to carry fire hose shall meet the requirements of Section 15.10.

8.6.2 If the apparatus is equipped with a fire pump and a water tank, two areas, each a minimum of 3.5 ft^3 (0.1 m^3), to accommodate 1½ in. (38 mm) or larger preconnected fire hose lines, shall be provided.

8.7* Ground Ladders.

8.7.1* A minimum of 115 ft (35 m) of ground ladders shall be supplied and installed by the contractor.

Copyright National Fire Protection Association
Provided by IHS under license with NFPA
No reproduction or networking permitted without license from IHS
Not for Resale

8.7.2* As a minimum, the following types of ladders shall be provided:

(1) One attic ladder
(2) Two straight ladders (with folding roof hooks)
(3) Two extension ladders

8.7.3 The contractor shall provide such brackets or compartments as are necessary to mount the equipment.

8.7.4 The ground ladders shall meet the requirements of NFPA 1931, *Standard on Design of and Design Verification Tests for Fire Department Ground Ladders*.

8.8* Minor Equipment.

8.8.1 The equipment listed in 8.8.2 and 8.8.3 shall be available on the aerial fire apparatus before the apparatus is placed in service.

8.8.1.1 Brackets or compartments shall be furnished so as to organize and mount the specified equipment.

8.8.1.2 A detailed list of who is to furnish the items and the method for organizing and mounting these items shall be supplied by the purchasing authority.

8.8.2* Aerial fire apparatus shall be equipped with at least the following equipment:

(1) Two 6 lb (2.7 kg) flathead axes mounted in brackets fastened to the apparatus
(2) Three 6 lb (2.7 kg) pickhead axes mounted in brackets fastened to the apparatus
(3) Four pike poles mounted in brackets fastened to the apparatus
(4) Two 3 ft to 4 ft (1 m to 1.2 m) plaster hooks with D handles mounted in brackets fastened to the apparatus
(5) Two crowbars mounted in brackets fastened to the apparatus
(6) Two claw tools mounted in brackets fastened to the apparatus
(7) Two 12 lb (5 kg) sledgehammers mounted in brackets fastened to the apparatus
(8) Four portable hand lights mounted in brackets fastened to the apparatus
(9) One approved dry chemical portable fire extinguisher with a minimum 80-B:C rating mounted in a bracket fastened to the apparatus
(10) One 2½ gal (9.5 L) or larger water extinguisher mounted in a bracket fastened to the apparatus
(11) One SCBA complying with NFPA 1981, *Standard on Open-Circuit Self-Contained Breathing Apparatus for Fire and Emergency Services*, for each assigned seating position, but not fewer than four, mounted in brackets fastened to the apparatus or stored in containers supplied by the SCBA manufacturer
(12) One spare SCBA cylinder for each SCBA carried, each mounted in a bracket fastened to the apparatus or stored in a specially designed storage space(s)
(13) One first aid kit
(14) Six salvage covers, each a minimum size of 12 ft × 18 ft (3.6 m × 5.5 m)
(15) Four combination spanner wrenches mounted in brackets fastened to the apparatus
(16) Two scoop shovels mounted in brackets fastened to the apparatus
(17) One pair of bolt cutters, 24 in. (0.6 m) minimum, mounted in a bracket fastened to the apparatus
(18) Four ladder belts meeting the requirements of NFPA 1983, *Standard on Fire Service Life Safety Rope and System Components*
(19) One 150 ft (45 m) light-use life safety rope meeting the requirements of NFPA 1983, *Standard on Fire Service Life Safety Rope and System Components*
(20) One 150 ft (45 m) general-use life safety rope meeting the requirements of NFPA 1983, *Standard on Fire Service Life Safety Rope and System Components*
(21) Two 150 ft (45 m) utility ropes having a breaking strength of at least 5000 lb (2300 kg)
(22) One box of tools to include the following:
  (a) One hacksaw with three blades
  (b) One keyhole saw
  (c) One 12 in. (0.3 m) pipe wrench
  (d) One 24 in. (0.6 m) pipe wrench
  (e) One ballpeen hammer
  (f) One pair of tin snips
  (g) One pair of pliers
  (h) One pair of lineman's pliers
  (i) Assorted types and sizes of screwdrivers
  (j) Assorted adjustable wrenches
  (k) Assorted combination wrenches
(23) Two wheel chocks, mounted in readily accessible locations, each designed to hold the apparatus, when loaded to its maximum in-service weight, on a 10 percent grade with the transmission in neutral and the parking brake released

8.8.3 If the aerial fire apparatus is equipped with a fire pump, the requirements of 8.8.3.1 through 8.8.3.3 shall apply.

8.8.3.1 The following equipment shall be provided:

(1) One double female 2½ in. (65 mm) adapter with National Hose threads, mounted in a bracket fastened to the apparatus
(2) One double male 2½ in. (65 mm) adapter with National Hose threads, mounted in a bracket fastened to the apparatus
(3) One rubber mallet, for use on suction hose connections, mounted in a bracket fastened to the apparatus
(4) Two hydrant wrenches mounted in brackets fastened to the apparatus

8.8.3.2 If the supply hose carried does not use sexless couplings, an additional double female adapter and double male adapter, sized to fit 2½ in. (65 mm) or larger fire hose, shall be carried mounted in brackets fastened to the apparatus.

8.8.3.3 If none of the pump intakes required by 16.6.1 are valved, a hose appliance that is equipped with one or more gated intakes with female swivel connection(s) compatible with the supply hose used on one side and a swivel connection with pump intake threads on the other side shall be carried. Any intake connection 3½ in. (90 mm) or larger shall include a pressure relief device that meets the requirements of 16.6.6.

Chapter 9 Quint Fire Apparatus

9.1 General. If the apparatus is to function as a quint, it shall meet the requirements of this chapter.

9.2 Fire Pump.

9.2.1 The apparatus shall be equipped with a fire pump that meets the requirements of Chapter 16 and has a minimum rated capacity of 1000 gpm (4000 L/min).

Copyright National Fire Protection Association
Provided by IHS under license with NFPA
No reproduction or networking permitted without license from IHS
Not for Resale

9.2.2 The fire pump shall be capable of supplying the flow requirements of 20.6.1 or 20.12.1 with a maximum intake gauge pressure of 20 psi (150 kPa).

9.2.3 Provisions shall be made to ensure that the pump operator is not in contact with the ground.

9.2.4 Signs shall be placed to warn the pump operator of electrocution hazards.

9.3 Aerial Device. The apparatus shall be equipped with an aerial ladder or an elevating platform with a permanently installed waterway that meets the requirements of Chapter 20.

9.4 Water Tank. The apparatus shall be equipped with a water tank(s) that meets the requirements of Chapter 19 and that has a minimum certified capacity (combined, if applicable) of 300 gal (1100 L).

9.5* Equipment Storage. A minimum of 40 ft^3 (1.1 m^3) of enclosed weather-resistant compartmentation that meets the requirements of Section 15.1 shall be provided for the storage of equipment.

9.6* Hose Storage. Hose bed area(s), compartments, or reels that comply with Section 15.10 shall be provided to accommodate the following:

(1) A minimum hose storage area of 30 ft^3 (0.8 m^3) for 2½ in. (65 mm) or larger fire hose
(2) Two areas, each a minimum of 3.5 ft^3 (0.1 m^3), to accommodate 1½ in. (38 mm) or larger preconnected fire hose lines

9.7* Equipment Supplied by the Contractor. The contractor shall supply the equipment listed in 9.7.1 and 9.7.2 and shall provide and install such brackets or compartments as are necessary to mount the equipment.

9.7.1 Ground Ladders.

9.7.1.1 The quint shall carry a minimum of 85 ft (26 m) of ground ladders to include at least one extension ladder, one straight ladder equipped with roof hooks, and one attic ladder.

9.7.1.2 All ground ladders carried on the apparatus shall meet the requirements of NFPA 1931, *Standard on Design of and Design Verification Tests for Fire Department Ground Ladders*.

9.7.2 Suction Hose.

9.7.2.1 A minimum of 15 ft (4.5 m) of soft suction hose or 20 ft (6 m) of hard suction hose shall be carried.

9.7.2.1.1 Where hard suction hose is provided, a suction strainer shall be furnished.

9.7.2.1.2 Where hard suction hose is provided, the friction and entrance loss of the combination suction hose and strainer shall not exceed the losses listed in Table 16.2.4.1(b) or Table 16.2.4.1(c).

9.7.2.1.3 Where soft suction hose is provided, it shall have couplings compatible with the local hydrant outlet connection on one end and the pump intake connection on the other end.

9.7.2.2 Suction hose shall meet the requirements of NFPA 1961, *Standard on Fire Hose*.

9.7.2.3* The purchaser shall specify whether hard or soft suction hose is to be provided, the length and size of the hose, the type and size of the couplings, the manner in which the suction hose is to be carried on the apparatus, and the style of brackets desired.

9.8* Minor Equipment.

9.8.1 The equipment listed in 9.8.2 and 9.8.3 shall be available on the quint fire apparatus before the apparatus is placed in service.

9.8.1.1 Brackets or compartments shall be furnished so as to organize and mount the specified equipment.

9.8.1.2 A detailed list of who is to furnish the items and the method for organizing and mounting these items shall be supplied by the purchasing authority.

9.8.2* Fire Hose and Nozzles. The following fire hose and nozzles shall be carried on the apparatus:

(1) 800 ft (240 m) of 2½ in. (65 mm) or larger fire hose, in any combination
(2) 400 ft (120 m) of 1½ in. (38 mm), 1¾ in. (45 mm), or 2 in. (52 mm) fire hose, in any combination
(3) One combination spray nozzle, 200 gpm (750 L/min) minimum
(4) Two combination spray nozzles, 95 gpm (360 L/min) minimum
(5) One playpipe with shutoff and 1 in. (25 mm), 1⅛ in. (29 mm), and 1¼ in. (32 mm) tips

9.8.3* Miscellaneous Equipment. The following additional equipment shall be carried on the apparatus:

(1) One 6 lb (2.7 kg) flathead axe mounted in a bracket fastened to the apparatus
(2) One 6 lb (2.7 kg) pickhead axe mounted in a bracket fastened to the apparatus
(3) One 6 ft (2 m) pike pole or plaster hook mounted in a bracket fastened to the apparatus
(4) One 8 ft (2.4 m) or longer pike pole mounted in a bracket fastened to the apparatus
(5) Two portable hand lights mounted in brackets fastened to the apparatus
(6) One approved dry chemical portable fire extinguisher with a minimum 80-B:C rating mounted in a bracket fastened to the apparatus
(7) One 2½ gal (9.5 L) or larger water extinguisher mounted in a bracket fastened to the apparatus
(8) One SCBA complying with NFPA 1981, *Standard on Open-Circuit Self-Contained Breathing Apparatus for Fire and Emergency Services*, for each assigned seating position, but not fewer than four, mounted in brackets fastened to the apparatus or stored in containers supplied by the SCBA manufacturer
(9) One spare SCBA cylinder for each SCBA carried, each mounted in a bracket fastened to the apparatus or stored in a specially designed storage space(s)
(10) One spare SCBA cylinder for each SCBA carried
(11) One first aid kit
(12) Four combination spanner wrenches mounted in brackets fastened to the apparatus
(13) Two hydrant wrenches mounted in brackets fastened to the apparatus
(14) One double female 2½ in. (65 mm) adapter with National Hose threads, mounted in a bracket fastened to the apparatus
(15) One double male 2½ in. (65 mm) adapter with National Hose threads, mounted in a bracket fastened to the apparatus
(16) One rubber mallet, for use on suction hose connections, mounted in a bracket fastened to the apparatus

Copyright National Fire Protection Association
Provided by IHS under license with NFPA
No reproduction or networking permitted without license from IHS
Not for Resale

(17) Four salvage covers, each a minimum size of 12 ft × 14 ft (3.7 m × 4.3 m)
(18) Four ladder belts meeting the requirements of NFPA 1983, *Standard on Fire Service Life Safety Rope and System Components*
(19) One 150 ft (45 m) light-use life safety rope meeting the requirements of NFPA 1983, *Standard on Fire Service Life Safety Rope and System Components*
(20) One 150 ft (45 m) general-use life safety rope meeting the requirements of NFPA 1983, *Standard on Fire Service Life Safety Rope and System Components*
(21) Two wheel chocks, mounted in readily accessible locations, each designed to hold the apparatus, when loaded to its maximum in-service weight, on a 10 percent grade with the transmission in neutral and the parking brake released

9.8.3.1 If the supply hose carried does not use sexless couplings, an additional double female adapter and double male adapter, sized to fit 2½ in. (65 mm) or larger fire hose, shall be carried mounted in brackets fastened to the apparatus.

9.8.3.2 If none of the pump intakes required by 16.6.1 are valved, a hose appliance that is equipped with one or more gated intakes with female swivel connection(s) compatible with the supply hose used on one side and a swivel connection with pump intake threads on the other side shall be carried. Any intake connection 3½ in. (90 mm) or larger shall include a pressure relief device that meets the requirements of 16.6.6.

Chapter 10 Special Service Fire Apparatus

10.1 General. If the apparatus is to function as a special service fire apparatus, it shall meet the requirements of this chapter.

10.2 Pump. If the apparatus is equipped with a fire pump, the pump shall meet the requirements of Chapter 16.

10.3* Equipment Storage. A minimum of 120 ft^3 (3.4 m^3) of enclosed weather-resistant compartmentation meeting the requirements of Section 15.1 shall be provided for the storage of equipment.

10.4* Equipment Supplied by the Contractor. The contractor shall supply the equipment listed in 10.4.1 and 10.4.2 and shall provide and install such brackets or compartments as are necessary to mount the equipment.

10.4.1 Ground Ladders. If ground ladders are carried on the apparatus, they shall meet the requirements of NFPA 1931, *Standard on Design of and Design Verification Tests for Fire Department Ground Ladders*.

10.4.2 Suction Hose. If the special service fire apparatus is equipped with a pump, the requirements in 10.4.2.1 through 10.4.2.3 shall apply.

10.4.2.1 A minimum of 15 ft (4.5 m) of soft suction hose or 20 ft (6 m) of hard suction hose shall be carried.

10.4.2.1.1 Where hard suction hose is provided, a suction strainer shall be furnished.

10.4.2.1.2 Where hard suction hose is provided, the friction and entrance loss of the combination suction hose and strainer shall not exceed the losses listed in Table 16.2.4.1(b) or Table 16.2.4.1(c).

10.4.2.1.3 Where soft suction hose is provided, it shall have couplings compatible with the local hydrant outlet connection on one end and the pump intake connection on the other end.

10.4.2.2 Suction hose shall meet the requirements of NFPA 1961, *Standard on Fire Hose*.

10.4.2.3* The purchaser shall specify whether hard or soft suction hose is to be provided, the length and size of the hose, the type and size of the couplings, the manner in which the suction hose is to be carried on the apparatus, and the style of brackets desired.

10.5* Minor Equipment.

10.5.1 The equipment listed in 10.5.2 shall be available on the special service fire apparatus before the apparatus is placed in service.

10.5.1.1 Brackets or compartments shall be furnished so as to organize and mount the specified equipment.

10.5.1.2 A detailed list of who is to furnish the items and the method for organizing and mounting these items shall be supplied by the purchasing authority.

10.5.2* The following equipment shall be carried on the apparatus:

(1) Two portable hand lights mounted in brackets fastened to the apparatus
(2) One approved dry chemical portable fire extinguisher with a minimum 80-B:C rating mounted in a bracket fastened to the apparatus
(3) One 2½ gal (9.5 L) or larger water extinguisher mounted in a bracket fastened to the apparatus
(4) One SCBA complying with NFPA 1981, *Standard on Open-Circuit Self-Contained Breathing Apparatus for Fire and Emergency Services*, for each assigned seating position, but not fewer than two, mounted in brackets fastened to the apparatus or stored in containers supplied by the SCBA manufacturer
(5) One spare SCBA cylinder for each SCBA carried, each mounted in a bracket fastened to the apparatus or stored in a specially designed storage space(s)
(6) One first aid kit
(7) Two wheel chocks, mounted in readily accessible locations, each designed to hold the apparatus, when loaded to its maximum in-service weight, on a 10 percent grade with the transmission in neutral and the parking brake released

Chapter 11 Mobile Foam Fire Apparatus

11.1 General. If the apparatus is to function as a mobile foam fire apparatus, it shall meet the requirements of this chapter.

11.2 Fire Pump. The apparatus shall be equipped with a fire pump that has a minimum rated capacity of 750 gpm (3000 L/min) and meets the requirements of Chapter 16 or an industrial supply pump that meets the requirements of Chapter 18.

11.3 Aerial Device. If the mobile foam fire apparatus is equipped with an aerial device, the requirements of 11.3.1 through 11.3.4 shall apply.

11.3.1 The aerial device shall meet the requirements of Chapter 20.

11.3.2 The aerial device shall be equipped with a permanently mounted waterway, and the fire pump shall be capable of supplying the flow requirements of 20.6.1, 20.12.1, or 20.16.1 with a maximum intake gauge pressure of 20 psi (150 kPa).

Copyright National Fire Protection Association
Provided by IHS under license with NFPA
No reproduction or networking permitted without license from IHS
Not for Resale

11.3.3 Provisions shall be made to ensure that the pump operator is not in contact with the ground.

11.3.4 Signs shall be placed to warn the pump operator of electrocution hazards.

11.4 Foam Proportioning System. The apparatus shall be equipped with a foam proportioning system that meets the requirements of Chapter 21.

11.5 Foam Tank. The mobile foam fire apparatus shall be equipped with a foam concentrate tank(s) that meets the requirements of Section 21.6 and that has a minimum certified capacity (combined, if applicable) of 500 gal (2000 L).

11.6* Equipment Storage. A minimum of 40 ft^3 (1.13 m^3) of enclosed weather-resistant compartmentation that meets the requirements of Section 15.1 shall be provided for the storage of equipment.

11.7* Hose Storage. Hose bed area(s), compartments, or reels that comply with Section 15.10 shall be provided to accommodate the following:

(1) A minimum hose storage area of 30 ft^3 (0.8 m^3) for 2½ in. (65 mm) or larger fire hose
(2) Two areas, each a minimum of 3.5 ft^3 (0.1 m^3), to accommodate 1½ in. (38 mm) or larger preconnected fire hose lines

11.8* Equipment Supplied by the Contractor. The contractor shall supply the equipment listed in 11.8.1 and shall provide and install such brackets or compartments as are necessary to mount the equipment.

11.8.1 Suction Hose.

11.8.1.1 A minimum of 15 ft (4.5 m) of soft suction hose or 20 ft (6 m) of hard suction hose shall be carried.

11.8.1.1.1 Where hard suction hose is provided, a suction strainer shall be furnished. The friction and entrance loss of the combination suction hose and strainer shall not exceed the losses listed in Table 16.2.4.1(b) or Table 16.2.4.1(c).

11.8.1.1.2 Where soft suction hose is provided, it shall have couplings compatible with the local hydrant outlet connection on one end and the pump intake connection on the other end.

11.8.1.2 Suction hose shall meet the requirements of NFPA 1961, *Standard on Fire Hose*.

11.8.1.3* The purchaser shall specify whether hard or soft suction hose is to be provided, the length and size of the hose, the type and size of the couplings, the manner in which the suction hose is to be carried on the apparatus, and the style of brackets desired.

11.9* Minor Equipment.

11.9.1 General. The equipment listed in 11.9.2 and 11.9.3 shall be available on the mobile foam fire apparatus before the apparatus is placed in service.

11.9.1.1 Brackets or compartments shall be furnished so as to organize and mount the specified equipment.

11.9.1.2 A detailed list of who is to furnish the items and the method for organizing and mounting these items shall be supplied by the purchasing authority.

11.9.2* Fire Hose and Nozzles. The following fire hose and nozzles shall be carried on the apparatus:

(1) 800 ft (240 m) of 2½ in. (65 mm) or larger fire hose, in any combination
(2) 400 ft (120 m) of 1½ in. (38 mm), 1¾ in. (45 mm), or 2 in. (52 mm) fire hose, in any combination
(3) Four foam or spray nozzles, 200 gpm (750 L/min) minimum
(4) Two foam or spray nozzles, 95 gpm (360 L/min) minimum
(5) One preconnected monitor, rated to discharge a minimum of 1000 gpm (4000 L/min), mounted on top of the fire apparatus with a spray or foam nozzle rated at a minimum of 1000 gpm (4000 L/min)

11.9.3* Miscellaneous Equipment. The following additional equipment shall be carried on the apparatus:

(1) One 6 lb (2.7 kg) pickhead axe mounted in a bracket fastened to the apparatus
(2) One 6 ft (2 m) pike pole or plaster hook mounted in a bracket fastened to the apparatus
(3) Two portable hand lights mounted in brackets fastened to the apparatus
(4) One approved dry chemical portable fire extinguisher with a minimum 80-B:C rating mounted in a bracket fastened to the apparatus
(5) One SCBA complying with NFPA 1981, *Standard on Open-Circuit Self-Contained Breathing Apparatus for Fire and Emergency Services*, for each assigned seating position, but not fewer than four, mounted in brackets fastened to the apparatus or stored in containers supplied by the SCBA manufacturer
(6) One spare SCBA cylinder for each SCBA carried, each mounted in a bracket fastened to the apparatus or stored in a specially designed storage space
(7) One first aid kit
(8) Four combination spanner wrenches mounted in brackets fastened to the apparatus
(9) Two hydrant wrenches mounted in brackets fastened to the apparatus
(10) One double female 2½ in. (65 mm) adapter with National Hose threads, mounted in a bracket fastened to the apparatus
(11) One double male 2½ in. (65 mm) adapter with National Hose threads, mounted in a bracket fastened to the apparatus
(12) One rubber mallet, suitable for use on suction hose connections, mounted in a bracket fastened to the apparatus
(13) Two wheel chocks, mounted in readily accessible locations, each designed to hold the apparatus, when loaded to its maximum in-service weight, on a 10 percent grade with the transmission in neutral and the parking brake released

11.9.3.1 If the supply hose carried does not use sexless couplings, an additional double female adapter and double male adapter, sized to fit 2½ in. (65 mm) or larger fire hose, shall be carried mounted in brackets fastened to the apparatus.

11.9.3.2 If none of the pump intakes required by 16.6.1 are valved, a hose appliance that is equipped with one or more gated intakes with female swivel connection(s) compatible with the supply hose used on one side and a swivel connection with pump intake threads on the other side shall be carried. Any intake connection 3½ in. (90 mm) or larger shall include a pressure relief device that meets the requirements of 16.6.6.

11.9.3.3 If the mobile foam fire apparatus is equipped with an aerial device with a permanently mounted ladder, four ladder belts meeting the requirements of NFPA 1983, *Standard on Fire Service Life Safety Rope and System Components*, shall be provided.

--`,,```,,,,````-`-`,,`,,`,`,,`---

Copyright National Fire Protection Association
Provided by IHS under license with NFPA
No reproduction or networking permitted without license from IHS
Not for Resale

Chapter 12 Chassis and Vehicle Components

12.1* Carrying Capacity. The GAWR and the GCWR or GVWR of the chassis shall be adequate to carry the weight of the unequipped apparatus, with the water tank and other tanks full, the specified hose load, unequipped personnel weight, ground ladders, and the miscellaneous equipment allowance as defined in Table 12.1.

12.1.1 If the purchaser provides a list of equipment to be carried with weights, or a specified miscellaneous equipment allowance, and that value exceeds the minimum specified in Table 12.1, then this value shall be used for the miscellaneous equipment allowance.

12.1.2* The unequipped personnel weight shall be calculated at 200 lb (90 kg) per person multiplied by the number of seating positions on the apparatus.

12.1.3 A final manufacturer's certification of the GVWR or GCWR, along with a certification of the GAWR, shall be supplied on a label affixed to the vehicle.

12.1.4 The fire apparatus manufacturer shall permanently affix a high-visibility plate in a location visible to the driver while seated.

12.1.4.1* The plate shall show the height of the completed fire apparatus in feet and inches or meters, the length of the completed fire apparatus in feet and inches or meters, and the gross vehicle weight rating (GVWR) in pounds or kilograms.

12.1.4.2 Wording on the plate shall indicate that the information shown was current when the apparatus was manufactured and that, if the overall height changes while the vehicle is in service, the fire department must revise that dimension on the plate.

12.2 Engine and Engine System Design.

12.2.1* Chassis Engine.

12.2.1.1* An engine governor or electronic fuel control system shall be installed that will limit the speed of the engine under all conditions of operation to that speed established by the engine manufacturer; this shall be the maximum governed speed.

12.2.1.2 Audible and visual warning devices that are visible from the driver's position shall be provided to alert the driver to high engine temperature or low oil pressure conditions.

12.2.1.3* Automatic engine shutdown systems shall not be permitted unless they are an integral part of the standard engine management system that cannot be disabled.

Table 12.1 Miscellaneous Equipment Allowance

		Equipment Allowance	
Apparatus Type	**Apparatus Size**	**lb**	**kg**
Pumper fire apparatus	Less than 250 ft^3 (7 m^3) compartment space*	2,000	910
	250 ft^3 (7 m^3) or more of compartment space*	2,500	1,135
Initial attack fire apparatus	10,000 lb to 15,000 lb (4500 kg to 7000 kg) GVWR	900	410
	15,001 lb to 20,000 lb (7001 kg to 9000 kg) GVWR	1,500	680
	20,001 lb and up (9000 kg and up) GVWR	2,000	910
Mobile water supply fire apparatus	All	1,000	455
Aerial fire apparatus	All	2,500	1,135
Quint fire apparatus	All	2,500	1,135
Special service fire apparatus	10,000 lb to 15,000 lb (4500 kg to 7000 kg) GVWR	2,000	910
	15,001 lb to 20,000 lb (7001 kg to 9000 kg) GVWR	2,500	1,135
	20,001 lb to 30,000 lb (9001 kg to 14,000 kg) GVWR	3,000	1,350
	30,001 lb to 40,000 lb (14,001 kg to 18,000 kg) GVWR	4,000	1,800
	40,001 lb to 50,000 lb (18,001 kg to 23,000 kg) GVWR	6,000	2,700
	50,001 lb to 60,000 lb (23,001 kg to 27,000 kg) GVWR	8,000	3,600
	60,001 lb and up (27,001 kg and up) GVWR	10,000	4,500
Mobile foam fire apparatus	All	2,000	910

*Compartment space for pumpers is calculated based on the inside dimensions of the enclosed compartment.

Copyright National Fire Protection Association
Provided by IHS under license with NFPA
No reproduction or networking permitted without license from IHS
Not for Resale

12.2.1.4 Engine Speed Control.

12.2.1.4.1* An engine speed control device shall be installed to allow an increase in the engine speed when the apparatus is parked.

12.2.1.4.2* An interlock shall prevent the operation of this engine speed control device unless the parking brake is fully engaged and the transmission is in neutral or park, or unless the engine speed control device is used with chassis engine-driven components, in which case it shall be interlocked with the engagement of those components.

12.2.1.5 The installation of the engine, transmission, and engine- and transmission-driven accessories (PTOs, etc.) shall meet the engine and transmission manufacturers' installation recommendations for the service intended.

12.2.1.6 An engine hourmeter shall be provided.

12.2.2 Cooling System.

12.2.2.1* The engine's cooling system shall maintain a temperature in the engine at or below the engine manufacturer's maximum temperature rating under all conditions for which the apparatus is designed.

12.2.2.2 Drain Valves.

12.2.2.2.1 Readily accessible drain valves shall be installed at the lowest point of the cooling system and at such other points as are necessary to permit complete removal of the coolant from the system.

12.2.2.2.2 Drain valves shall be designed such that they will not open accidentally due to vibration.

12.2.2.3 The radiator shall be mounted so as to prevent the development of leaks caused by twisting or straining when the apparatus operates over uneven ground.

12.2.2.4 Radiator cores shall be compatible with commercial antifreeze solutions.

12.2.3 Lubrication System.

12.2.3.1* The engine shall be provided with an oil filter of the type approved by the engine manufacturer.

12.2.3.2 The engine oil fill pipe shall be large enough and located so as to allow easy filling.

12.2.3.3 A permanent plate in the driving compartment shall specify the quantity and type of the following fluids used in the vehicle:

(1) Engine oil
(2) Engine coolant
(3) Chassis transmission fluid
(4) Pump transmission lubrication fluid
(5) Pump primer fluid
(6) Drive axle(s) lubrication fluid
(7) Air conditioning refrigerant
(8) Air conditioning lubrication oil
(9) Power steering fluid
(10) Cab tilt mechanism fluid
(11) Transfer case fluid
(12) Equipment rack fluid
(13) Air compressor system lubricant
(14) Generator system lubricant
(15) Front tire cold pressure
(16) Rear tire cold pressure

12.2.4 Fuel and Air System.

12.2.4.1* Diesel Engines.

12.2.4.1.1 Air Intake System.

12.2.4.1.1.1* An air filter shall be provided in the engine's intake air system.

12.2.4.1.1.2 Air inlet restrictions shall not exceed the engine manufacturer's recommendations.

12.2.4.1.1.3* The air inlet shall be equipped with a means of separating water and burning embers from the air intake system such that particulate matter larger than 0.039 in. (1.0 mm) in diameter cannot reach the air filter element.

12.2.4.1.1.4 An air restriction indicator shall be mounted in the driving compartment and visible to the driver.

12.2.4.1.2* The fuel supply lines and fuel filters shall meet the engine manufacturer's recommendations.

12.2.4.1.3 Electric Fuel Priming System.

12.2.4.1.3.1* Where an electric fuel priming system is furnished, the valving and piping shall be arranged so that the priming system can be operated only to reprime the fuel system.

12.2.4.1.3.2 When the priming system is not being intentionally operated, it shall be isolated from the fuel system and inoperable.

12.2.4.1.3.3 The priming system shall be marked with a label to indicate proper operation.

12.2.4.2 Gasoline Engines.

12.2.4.2.1 Air Intake System.

12.2.4.2.1.1 An air filter shall be provided in the engine's intake air system.

12.2.4.2.1.2 Air inlet restrictions shall not exceed the engine manufacturer's recommendations.

12.2.4.2.1.3* The air inlet shall be equipped with a means of separating water and burning embers from the air intake system such that particulate matter larger than 0.039 in. (1.0 mm) in diameter cannot reach the air filter element.

12.2.4.2.1.4 An air restriction indicator shall be mounted in the driving compartment and visible to the driver.

12.2.4.2.2 Fuel System.

12.2.4.2.2.1 Fuel lines and filters or strainers that meet the engine manufacturer's recommendations shall be provided.

12.2.4.2.2.2 The filters or strainers shall be of a serviceable type and mounted in an accessible location.

12.2.4.2.2.3 Where two or more fuel lines are installed, separate fuel pumps operating in parallel with check valves and filtering devices shall be provided.

12.2.4.2.2.4 The fuel line(s) shall be located or protected so as not to be subjected to excessive heating from any portion of an exhaust system.

12.2.4.2.2.5 The line(s) shall be protected from mechanical damage.

12.2.4.2.2.6 A gasoline feed system shall include an electric-powered fuel pump located within or adjacent to the fuel tank.

--`,,```,,,,````-`-`,,`,,`,`,,`---

Copyright National Fire Protection Association
Provided by IHS under license with NFPA
No reproduction or networking permitted without license from IHS
Not for Resale

12.2.5 Exhaust System.

12.2.5.1* The exhaust piping and discharge outlet shall be located or shielded so as not to expose any portion of the apparatus or equipment to excessive heating.

12.2.5.2 Exhaust pipe discharge shall be directed away from any operator's position.

12.2.5.3 If the apparatus is equipped with stabilizers, the exhaust piping discharge shall be directed away from the contact area between the stabilizer and the ground when the stabilizer is deployed.

12.2.5.4 Silencing devices shall be provided.

12.2.5.5 Exhaust back pressure shall not exceed the limits specified by the engine manufacturer.

12.2.5.6 Where parts of the exhaust system are exposed so that they are likely to cause injury to operating personnel, protective guards shall be provided.

12.3 Vehicle Components.

12.3.1 Braking System.

12.3.1.1 The vehicle shall be equipped with an all-wheel antilock braking system if such a system is available from the chassis manufacturer.

12.3.1.2 All brakes shall be readily accessible for adjustment.

12.3.1.3 The service brakes and parking brakes shall be applied by independent means.

12.3.1.4 The service brake application valve, when applied, shall operate all the service brakes on the vehicle or combination vehicle.

12.3.1.5* Where air-actuated braking systems are provided, they shall include the following:

(1) An automatic moisture ejector
(2) An air dryer
(3) A pressure protection valve to prevent the use of all air-operated accessories except air-operated windshield wipers and air-assist steering, if provided, when the system air pressure drops below 80 psi (550 kPa)
(4) A quick buildup section in the air reservoir system arranged so that if the apparatus has a completely discharged air system, it is able to move within 60 seconds of startup.

12.3.1.5.1 The quick buildup system shall provide sufficient air pressure so that the apparatus has no brake drag and is able to stop under the intended operating conditions following the 60 second buildup time.

12.3.1.5.2* On a chassis that cannot be equipped with a quick buildup air brake system, an onboard automatic electric compressor or a fire station compressed air shoreline hookup shall be permitted in order to maintain full operating air pressure while the vehicle is not running.

12.3.1.6* Parking Brakes.

12.3.1.6.1 Parking brakes shall control the rear wheels, or all wheels, and shall be of the positive, mechanically actuated type.

12.3.1.6.2 When the fire apparatus is loaded to its maximum in-service weight, the parking brake system shall hold the apparatus on at least a 20 percent grade.

12.3.1.6.3 A lockup device to retain applied pressure on hydraulically actuated service brake systems or the use of the "park" position on an automatic transmission shall not be substituted for a separate parking brake system.

12.3.1.6.4 Parking brakes on steerable axles of tiller vehicles shall be provided where necessary to meet the requirements of this standard.

12.3.1.6.5 Air-applied brakes or mechanically actuated brakes shall be permitted on these axles.

12.3.1.7* All apparatus with a GVWR of 36,000 lb (16,000 kg) or greater shall be equipped with an auxiliary braking system.

12.3.2 Suspension and Wheels.

12.3.2.1* Each load-bearing tire and rim of the apparatus shall not carry a weight in excess of the recommended load for the operation of truck tires of the size used, as published in the *Tire and Rim Association — Year Book* and as recommended by the tire manufacturer, when the apparatus is loaded as indicated in Section 12.1.

12.3.2.1.1 Where the vehicle tires are utilized as part of an aerial device stability system, the maximum loads imposed on the tires shall not exceed the tire manufacturer's maximum static load rating.

12.3.2.2 Axle housings and any components other than wheels and tires shall clear the road surface by at least 8 in. (203 mm).

12.3.2.3* An angle of approach and an angle of departure of at least 8 degrees shall be maintained at the front and the rear of the vehicle when it is loaded as indicated in Section 12.1.

12.3.2.4 Clearance for tire chains shall be provided in accordance with SAE J683, *Tire Chain Clearance — Trucks, Buses (Except Suburban, Intercity, and Transit Buses), and Combinations of Vehicles.*

12.3.2.5 Steering.

12.3.2.5.1 The steering mechanism shall be capable of turning the front wheels to an angle of at least 30 degrees to either the right or the left for nondriving front axles and at least 28 degrees for driving front axles.

12.3.2.5.2 Power steering or power-assisted steering shall be provided.

12.3.2.6 Tractor-Drawn Aerial Fire Apparatus.

12.3.2.6.1 If a tractor-drawn vehicle is provided for an aerial fire apparatus, it shall consist of a tractor with a permanent, nonkingpinned "fifth wheel" mounted on the rear of the chassis to carry the forward end of the aerial ladder trailer unit.

12.3.2.6.2 The fifth wheel and body design shall be of a type that allows full 90-degree jackknifing of the tractor trailer combination with the stabilizers in the stored position.

12.3.2.6.3 A steering wheel shall be provided to steer the rear wheels of the trailer unit.

12.3.2.6.3.1 The steering shall be of the power or power-assisted type.

12.3.2.6.3.2 A minimum wheel cramp angle of 20 degrees right and left shall be provided.

12.3.2.6.4 An audible and visual warning system shall be provided to warn both drivers when the jackknife position approaches the manufacturer's maximum allowable position.

Copyright National Fire Protection Association
Provided by IHS under license with NFPA
No reproduction or networking permitted without license from IHS
Not for Resale

12.3.2.6.5 If the manufacturer's design does not permit the load from the aerial device to be transferred to the rear springs of the tractor, a device shall be installed that will prevent such a weight transfer.

12.3.3* Transmission.

12.3.3.1 The transmission shall be rated for heavy-duty service and shall be designed to match engine torque and speed to the load demand.

12.3.3.2 The transmission shall provide the driver with the selection of individual gears, or ranges of gears, necessary to meet the performance requirements of this standard.

12.3.4 Fuel Tank.

12.3.4.1* The fuel capacity shall allow the engine to drive the pump for 2½ hours at rated pump capacity at 150 psi (1000 kPa) net pump pressure and at the suction conditions specified in this standard or to operate at 60 percent of gross engine horsepower for 2½ hours, whichever is greater.

12.3.4.2 The tank fill opening shall be marked with a label indicating the type of fuel to be used.

12.3.4.3 If two fuel tanks are furnished, the fuel system shall not require manual intervention to provide fuel to the engine. A single fuel gauge shall indicate the proportional amount of fuel in the fuel system.

12.3.4.4 The tank fill piping shall be placed so it is protected from mechanical damage.

12.3.4.5 The tank and the fill piping shall be placed so that they are not exposed to heat from an exhaust system or other source of ignition.

12.3.4.6 The tank shall be placed so it is removable for repairs.

12.3.4.7 A means for draining the tank without removing the tank shall be supplied.

12.3.5* Tow Hooks. Front and rear tow hooks or tow eyes shall be attached to the frame structure to allow towing (not lifting) of the apparatus without damage.

Chapter 13 Low Voltage Electrical Systems and Warning Devices

13.1* General. Any low voltage electrical systems or warning devices installed on the fire apparatus shall be appropriate for the mounting location and intended electrical load and shall meet the specific requirements of Chapter 13.

13.2 Wiring. All electrical circuit feeder wiring supplied and installed by the fire apparatus manufacturer shall meet the requirements of 13.2.1 through 13.2.8.

13.2.1* The wire shall be stranded copper or copper alloy conductors of a gauge rated to carry 125 percent of the maximum current for which the circuit is protected.

13.2.1.1 Voltage drops in all wiring from the power source to the using device shall not exceed 10 percent.

13.2.1.2 The use of star washers for circuit ground connections shall not be permitted.

13.2.1.3 All circuits shall otherwise be wired in conformance with SAE J1292, *Automobile, Truck, Truck-Tractor, Trailer, and Motor Coach Wiring.*

13.2.2 Wiring and Wire Harness Construction.

13.2.2.1 All insulated wire and cable shall conform to SAE J1127, *Battery Cable,* or SAE J1128, *Low Tension Primary Cable,* Type SXL, GXL, or TXL.

13.2.2.1.1 All conductors shall be constructed in accordance with SAE J1127, *Battery Cable,* or SAE J1128, *Low Tension Primary Cable,* except where good engineering practice dictates special strand construction.

13.2.2.1.2 Conductor materials and stranding, other than copper, shall be permitted if all applicable requirements for physical, electrical, and environmental conditions are met as dictated by the end application.

13.2.2.1.3 Physical and dimensional values of conductor insulation shall be in conformance with the requirements of SAE J1127, *Battery Cable,* or SAE J1128, *Low Tension Primary Cable,* except where good engineering practice dictates special conductor insulation.

13.2.2.2 The overall covering of conductors shall be moisture-resistant loom or braid that has a minimum continuous rating of 194°F (90°C) except where good engineering practice dictates special consideration for loom installations exposed to higher temperatures.

13.2.3 The overall covering of jacketed cables shall be moisture resistant and have a minimum continuous temperature rating of 194°F (90°C) except where good engineering practice dictates special consideration for cable installations exposed to higher temperatures.

13.2.4 All wiring connections and terminations shall use a method that provides a positive mechanical and electrical connection.

13.2.4.1 The wiring connections and terminations shall be installed in accordance with the device manufacturer's instructions.

13.2.4.2 All terminal strips shall have protective covers.

13.2.4.3 Wire nut, insulation displacement, and insulation piercing connections shall not be used.

13.2.5 Wiring shall be restrained to prevent damage caused by chafing or ice buildup, and protected against heat, liquid contaminants, or other environmental factors.

13.2.6* Wiring shall be uniquely identified at least every 2 ft (0.6 m) by color coding or permanent marking with a circuit function code. The identification shall reference a wiring diagram. *[See 4.19.2.3(6).]*

13.2.7 Circuits shall be provided with properly rated low voltage overcurrent protective devices.

13.2.7.1 Such devices shall be readily accessible and protected against heat in excess of the overcurrent device's design range, mechanical damage, and water spray.

13.2.7.2 Circuit protection shall be accomplished by utilizing fuses, circuit breakers, fusible links, or solid state equivalent devices.

13.2.7.3 If a mechanical-type device is used, it shall conform to one of the following SAE standards:

(1) SAE J156, *Fusible Links*
(2) SAE J553, *Circuit Breakers*
(3) SAE J554, *Electric Fuses (Cartridge Type)*
(4) SAE J1888, *High Current Time Lag Electric Fuses*
(5) SAE J2077, *Miniature Blade Type Electrical Fuses*

--`,,```,,,,````-`-`,,`,,`,`,,`---

Copyright National Fire Protection Association
Provided by IHS under license with NFPA
No reproduction or networking permitted without license from IHS
Not for Resale

13.2.8 Switches, relays, terminals, and connectors shall have a direct current (dc) rating of 125 percent of maximum current for which the circuit is protected.

13.3 Power Supply.

13.3.1 A 12 volt or 24 volt electrical alternator shall be provided.

13.3.2* It shall have a minimum output at idle to meet the minimum continuous electrical load of the fire apparatus as defined in 13.3.3, at 200°F (93°C) ambient temperature within the engine compartment, and shall be provided with full automatic regulation.

13.3.3 The minimum continuous electrical load shall consist of the total amperage required to simultaneously operate the following in a stationary mode during emergency operations:

(1) The propulsion engine and transmission
(2) All legally required clearance and marker lights, headlights, and other electrical devices except windshield wipers and four-way hazard flashers
(3) The radio(s) at a duty cycle of 10 percent transmit and 90 percent receive (for calculation and testing purposes, a default value of 5 A continuous)
(4) The lighting necessary to produce 1 fc (10 lx) of illumination on all walking surfaces on the apparatus and on the ground at all egress points onto and off the apparatus, 5 fc (50 lx) of illumination on all control and instrument panels, and 50 percent of the total compartment lighting loads
(5) The minimum optical warning system required in Section 13.8, where the apparatus is blocking the right-of-way
(6) The continuous electrical current required to simultaneously operate any fire pumps, aerial devices, and hydraulic pumps
(7)*Other warning devices and electrical loads defined by the purchaser as critical to the mission of the apparatus.

13.3.4* The condition of the low voltage electrical system shall be monitored by a system that provides an audible and visual warning to persons on, in, or near the apparatus of an impending electrical system failure caused by the excessive discharge of the battery set.

13.3.4.1 The charge status of the battery shall be determined either by direct measurement of the battery charge or indirectly by monitoring the system voltage.

13.3.4.2 If system voltage is monitored, the alarm shall sound if the system voltage at the battery or at the master load disconnect switch drops below 11.8 V for 12 V nominal systems or 23.6 V for 24 V nominal systems for more than 120 seconds.

13.3.5 A voltmeter shall be mounted on the driver's instrument panel to allow direct observation of the system voltage.

13.3.6 Load Management.

13.3.6.1* If the total continuous electrical load exceeds the minimum continuous electrical output rating of the installed alternator(s) operating under the conditions specified in 13.3.2, an automatic electrical load management system shall be required.

13.3.6.2 The minimum continuous electrical loads defined in 13.3.3 shall not be subject to automatic load management.

13.4* Batteries.

13.4.1 Batteries shall be of the high-cycle type.

13.4.2 With the engine off, the battery system shall be able to provide the minimum continuous electrical load for 10 minutes without discharging more than 50 percent of the reserve capacity and then restart the engine.

13.4.3 The battery system cold cranking amps (CCA) rating shall meet or exceed the minimum CCA recommendations of the engine manufacturer.

13.4.4 The batteries shall be mounted to prevent movement during fire apparatus operation and shall be protected against accumulations of road spray, snow, and road debris.

13.4.4.1 The batteries shall be readily accessible for examination, test, and maintenance.

13.4.4.2 A means shall be provided for jump-starting the engine if the batteries are not accessible without lifting the cab of a tilt-cab apparatus.

13.4.4.3 Where an enclosed battery compartment is provided, it shall be ventilated to the exterior to prevent the buildup of heat and explosive fumes.

13.4.4.4* The batteries shall be protected against vibration and temperatures that exceed the battery manufacturer's recommendation.

13.4.5* An onboard battery conditioner or charger, or a polarized inlet, shall be provided for charging all batteries. Where an onboard conditioner or charger is supplied, the associated line voltage electrical power system shall be installed in accordance with Chapter 23.

13.4.6 A master load disconnect switch shall be provided between the starter solenoid(s) and the remainder of the electrical loads on the apparatus.

13.4.6.1 The batteries shall be connected directly to the starter solenoid(s).

13.4.6.2 Electronic control systems and similar devices shall be permitted to be otherwise connected if so specified by their manufacturer.

13.4.6.3 The alternator shall be wired directly to the batteries through the ammeter shunt(s), if one is provided, and not through the master load disconnect switch.

13.4.6.4* A green "battery on" pilot light that is visible from the driver's position shall be provided.

13.4.7* A sequential switching device shall be permitted to energize the optical warning devices required in 13.3.3 and other high-current devices, provided the switching device energizes the electrical devices required in 13.3.3 first and within 5 seconds.

13.5 Starting Device.

13.5.1 An electrical starting device shall be provided for the engine.

13.5.2 Where the electrical starting device is operating under maximum load, the voltage drop of the conductors between the battery and the starting device shall be in accordance with SAE J541, *Voltage Drop for Starting Motor Circuits.*

13.6 Temperature Exposure. Any alternator, electrical starting device, ignition wiring, distributor, or ignition coil shall be moisture resistant and protected such that it is not exposed to a temperature that exceeds the component manufacturer's recommendations.

Copyright National Fire Protection Association
Provided by IHS under license with NFPA
No reproduction or networking permitted without license from IHS
Not for Resale

13.7 Electromagnetic Interference.

13.7.1* Electromagnetic interference suppression shall be provided, as required, to satisfy the radiation limits specified in SAE J551/2, *Test Limits and Methods of Measurement of Radio Disturbance Characteristics of Vehicles, Motorboats, and Spark-Ignited Engine-Driven Devices*.

13.7.2 The purchaser shall indicate if testing and certification under SAE J551/2, *Test Limits and Methods of Measurement of Radio Disturbance Characteristics of Vehicles, Motorboats, and Spark-Ignited Engine-Driven Devices*, are required.

13.8 Optical Warning Devices. Each apparatus shall have a system of optical warning devices that meets or exceeds the requirements of this section.

13.8.1* The optical warning system shall consist of an upper and a lower warning level.

13.8.2 The requirements for each level shall be met by the warning devices in that particular level without consideration of the warning devices in the other level.

13.8.3 For the purpose of defining and measuring the required optical performance, the upper and lower warning levels shall each be divided into four warning zones.

13.8.3.1 The four zones shall be determined by drawing lines through the geometric center of the apparatus at 45 degrees to a line drawn lengthwise through the geometric center of the apparatus.

13.8.3.2 The four zones shall be designated A, B, C, and D in a clockwise direction with zone A to the front of the apparatus in accordance with Figure 13.8.3.2.

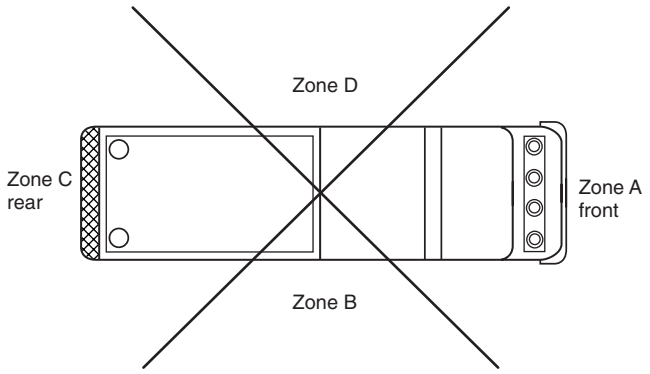

FIGURE 13.8.3.2 Warning Zones for Optical Warning Devices.

13.8.4 Each optical warning device shall be installed on the apparatus and connected to the apparatus's electrical system in accordance with the requirements of this standard and the requirements of the manufacturer of the device.

13.8.5 A master optical warning device switch that energizes all of the optical warning devices shall be provided.

13.8.6 The optical warning system on the fire apparatus shall be capable of two separate signaling modes during emergency operations.

13.8.6.1 One mode shall signal to drivers and pedestrians that the apparatus is responding to an emergency and is calling for the right-of-way.

13.8.6.2 One mode shall signal that the apparatus is stopped and is blocking the right-of-way.

13.8.7 A switching system shall be provided that senses the position of the parking brake or the park position of an automatic transmission.

13.8.7.1 When the master optical warning system switch is closed and the parking brake is released or the automatic transmission is not in park, the warning devices signaling the call for the right-of-way shall be energized.

13.8.7.2 When the master optical warning system switch is closed and the parking brake is on or the automatic transmission is in park, the warning devices signaling the blockage of the right-of-way shall be energized.

13.8.7.3* The system shall be permitted to have a method of modifying the two signaling modes.

13.8.8 The optical warning devices shall be constructed or arranged so as to avoid the projection of light, either directly or through mirrors, into any driving or crew compartment(s).

13.8.9 The front optical warning devices shall be placed so as to maintain the maximum possible separation from the headlights.

13.8.10 The optical sources on each level shall be of sufficient number and arranged so that failure of a single optical source does not create a measurement point, in any zone on the same level as the failed optical source, without a warning signal at a distance of 100 ft (30 m) from the geometric center of the apparatus.

13.8.11* Flash Rate.

13.8.11.1 The minimum flash rate of any optical source shall be 75 flashes per minute, and the minimum number of flashes at any measurement point shall be 150 flashes per minute.

13.8.11.1.1 Steady burning nonflashing optical sources shall be permitted to be used.

13.8.11.1.2 The optical energy provided by these nonflashing optical sources shall not be included in the calculations of the zone's total optical power.

13.8.11.2 The flasher of any current-interrupted flashing device shall otherwise meet the requirements of SAE J1690, *Flashers*.

13.8.12* Color of Warning Lights.

13.8.12.1 Permissible colors or combinations of colors in each zone, within the constraints imposed by applicable laws and regulations, shall be as shown in Table 13.8.12.1.

13.8.12.2 All colors shall be as specified in SAE J578, *Color Specification*, for red, blue, yellow, or white.

Table 13.8.12.1 Zone Colors

Color	Calling for Right-of-Way	Blocking Right-of-Way
Red	Any zone	Any zone
Blue	Any zone	Any zone
Yellow	Any zone except A	Any zone
White	Any zone except C	Not permitted

Copyright National Fire Protection Association
Provided by IHS under license with NFPA
No reproduction or networking permitted without license from IHS
Not for Resale

13.8.13* Requirements for Large Apparatus.

13.8.13.1 If the apparatus has a bumper-to-bumper length of 25 ft (7.6 m) or more or has an optical center on any optical warning device greater than 8 ft (2.4 m) above level ground, the requirements of 13.8.13.2 through 13.8.13.6 shall apply.

13.8.13.2 Upper-Level Optical Warning Devices.

13.8.13.2.1 The upper-level optical warning devices shall be mounted as high and as close to the corner points of the apparatus as is practical in order to define the clearance lines of the apparatus.

13.8.13.2.2 The upper-level optical warning devices shall not be mounted above the maximum height, specified by the device manufacturer, that gives an intensity value at 4 ft (1.2 m) above level ground and 100 ft (30.5 m) from the optical warning device of less than 50 percent of that required at the optical center.

13.8.13.3 Lower-Level Optical Warning Devices.

13.8.13.3.1 In order to define the clearance lines of the apparatus, the optical center of the lower-level optical warning devices in the front of the vehicle shall be mounted forward of the front axle centerline and as close to the front corner points of the apparatus as is practical.

13.8.13.3.2 The optical center of the lower-level optical warning devices at the rear of the vehicle shall be mounted behind the rear axle centerline and as close to the rear corners of the apparatus as is practical.

13.8.13.3.3 The optical center of any lower-level device shall be between 18 in. and 62 in. (460 mm and 1600 mm) above level ground.

13.8.13.4 Midship Optical Warning Devices.

13.8.13.4.1 A midship optical warning device shall be mounted on both the right and the left sides of the apparatus if the distance between the front and rear lower-level optical devices exceeds 25 ft (7.6 m) at the optical center.

13.8.13.4.2 Additional midship optical warning devices shall be required, where necessary, to maintain a horizontal distance between the centers of adjacent lower-level optical warning devices of 25 ft (7.6 m) or less.

13.8.13.4.3 The optical center of any midship mounted optical warning device shall be between 18 in. and 62 in. (460 mm and 1600 mm) above level ground.

13.8.13.5* For each operating mode, the combined optical power of all the optical sources shall meet or exceed the zone total optical power requirements shown in Table 13.8.13.5.

13.8.13.6 No individual measurement point shall be less than that shown in Table 13.8.13.5.

13.8.14* Requirements for Small Apparatus.

13.8.14.1 If the apparatus has a bumper-to-bumper length of less than 25 ft (7.6 m) and has the optical center of all optical warning devices at 8 ft (2.4 m) or less above level ground, the requirements of 13.8.14.2 through 13.8.14.5 shall apply.

13.8.14.2 Upper-Level Optical Warning Devices.

13.8.14.2.1 The upper-level optical warning devices shall be mounted as high as practical, but not over 8 ft (2.4 m), at the optical center.

13.8.14.2.2 The upper-level optical warning devices shall be permitted to be combined in one or more enclosures and shall be permitted to be mounted on the cab roof or any other convenient point.

13.8.14.3 Lower-Level Optical Warning Devices.

13.8.14.3.1 One or more lower-level optical warning devices shall be visible from the front and the side of the apparatus.

13.8.14.3.2 The optical center of the lower-level optical warning devices in the front of the vehicle shall be mounted forward of the front wheel centerline and as close to the front corner points of the apparatus as practical.

13.8.14.3.3 The optical center of the device(s) shall be between 18 in. and 48 in. (460 mm and 1220 mm) above level ground.

Table 13.8.13.5 Minimum Optical Power Requirements for Large Apparatus

		Mode of Operation					
		Clearing Right-of-Way			Blocking Right-of-Way		
Zone	Level	*H*	At Any *H* Point	At Any Point 5 Degrees Up or 5 Degrees Down from *H*	*H*	At Any *H* Point	At Any Point 5 Degrees Up or 5 Degrees Down from *H*
A	Upper	1,000,000	10,000	3,500	400,000	10,000	3,500
B	Upper	400,000	10,000	3,500	400,000	10,000	3,500
C	Upper	400,000	10,000	3,500	800,000	10,000	3,500
D	Upper	400,000	10,000	3,500	400,000	10,000	3,500
A	Lower	150,000	3,750	1,300	150,000	3,750	1,300
B	Lower	150,000	3,750	1,300	150,000	3,750	1,300
C	Lower	150,000	3,750	1,300	150,000	3,750	1,300
D	Lower	150,000	3,750	1,300	150,000	3,750	1,300

Notes:
1. All values are in candela-seconds/minute.
2. *H* = Horizontal plane passing through the optical center.

Copyright National Fire Protection Association
Provided by IHS under license with NFPA
No reproduction or networking permitted without license from IHS
Not for Resale

13.8.14.4 For each operating mode, the combined optical power of all the optical sources mounted on both the upper and lower levels shall meet or exceed the zone's total optical power requirements shown in Table 13.8.14.4.

13.8.14.5 No individual measurement point shall be less than that shown in Table 13.8.14.4.

13.8.15 Tests of Optical Warning Devices.

13.8.15.1 Mechanical and Environmental Test.

13.8.15.1.1 All optical warning devices shall be tested to the requirements of SAE J595, *Flashing Warning Lamps for Authorized Emergency, Maintenance, and Service Vehicles*, SAE J845, *Optical Warning Devices for Authorized Emergency, Maintenance, and Service Vehicles*, SAE J1318, *Gaseous Discharge Warning Lamp for Authorized Emergency, Maintenance, and Service Vehicles*, or SAE J1889, *L.E.D. Lighting Devices*.

13.8.15.1.2 Optical devices and components designed for mounting only in weatherproof, interior spaces shall be tested in conformance with the applicable SAE standard listed in 13.8.15.1.1 and shall comply with the vibration test and the warpage test for plastic components.

13.8.15.1.3 Optical devices and components designed for mounting on the exterior of the apparatus or in nonweatherproof interior spaces shall be tested in conformance with SAE J845, *360 Degree Warning Devices for Authorized Emergency, Maintenance, and Service Vehicles*, and shall comply with the following performance requirements of that standard:

(1) Vibration
(2) Moisture
(3) Dust
(4) Corrosion
(5) High temperature
(6) Low temperature
(7) Durability
(8) Warpage

13.8.15.2 Photometric Test Procedures for Optical Devices.

13.8.15.2.1 Testing shall be performed by, or on behalf of, the device manufacturer to ensure compliance with the requirements of 13.8.15.2.2 through 13.8.15.2.5.2.

13.8.15.2.1.1 The results of the testing shall be used by the apparatus builder or purchaser to determine compliance with this standard and shall be available upon request from the optical warning device manufacturer.

13.8.15.2.1.2 The goniometer, integrating photometer, and other equipment used to take the test measurements shall meet the requirements of SAE J1330, *Photometry Laboratory Accuracy Guidelines*.

13.8.15.2.2 The optical source shall be mounted in a goniometer and operated as it would be in a normal system application.

13.8.15.2.2.1 The minimum distance between the light-emitting surface of the source being tested and the front face of the photometer detector shall be 59 ft (18 m).

13.8.15.2.2.2 The goniometer shall be oriented and the integrating photometer shall be set to integrate light pulses from the source for 20 seconds.

13.8.15.2.3 For all tests performed with the power applied, the lighting system, or component thereof, shall be operated at 12.8 V ± 0.1 V for 12 V rated equipment and 25.6 V ± 0.2 V for 24 V rated equipment.

13.8.15.2.3.1 If the equipment is rated for operation on both 12 V and 24 V, the tests shall be performed at both voltages.

13.8.15.2.3.2 Voltage shall be measured at a point 12 in. ± 1 in. (300 mm ± 25 mm) from the entry into the component.

13.8.15.2.4 The technique described in 13.8.15.2.2 through 13.8.15.2.2.2 shall be performed along the horizontal plane that passes through the optical center, beginning at the optical center and repeated at 5 degree intervals to the left and right of the optical center throughout the active horizontal angle of light emission of the optical source.

13.8.15.2.5 Measurements shall be repeated at 5 degrees up and 5 degrees down from the horizontal plane that passes through the optical center, beginning at a point on a line passing through the optical center, and perpendicular to the horizontal plane and passing through the optical center.

13.8.15.2.5.1 The measurements shall be repeated at 5 degree intervals to the left and right of this line throughout the active horizontal angle of light emission of the optical source.

Table 13.8.14.4 Minimum Optical Power Requirements for Small Apparatus

	Mode of Operation					
	Clearing Right-of-Way			Blocking Right-of-Way		
Zone	*H*	At Any *H* Point	At Any Point 5 Degrees Up or 5 Degrees Down from *H*	*H*	At Any *H* Point	At Any Point 5 Degrees Up or 5 Degrees Down from *H*
A	1,000,000	10,000	3,500	400,000	10,000	3,500
B	200,000	8,000	3,500	200,000	8,000	3,500
C	400,000	10,000	3,500	800,000	10,000	3,500
D	200,000	8,000	3,500	200,000	8,000	3,500

Notes:
1. All values are in candela-seconds/minute.
2. *H* = Horizontal plane passing through the optical center.

Copyright National Fire Protection Association
Provided by IHS under license with NFPA
No reproduction or networking permitted without license from IHS
Not for Resale

13.8.15.2.5.2 If the optical warning device contains more than one optical source, the test shall be repeated for each optical source.

13.8.16* Compliance Documentation. The apparatus manufacturer shall demonstrate compliance of the warning system by one of the following methods:

(1) Certification that the system was installed within the geometric parameters specified by the manufacturer of the system and referencing the optical source test reports provided by the manufacturer of the system
(2) Certification that a mathematical calculation based on test reports for individual optical sources provided by the manufacturer of the devices and performed by a qualified person demonstrates that the combination of individual devices as installed meets the requirements of this standard
(3) Actual measurement of the lighting system after installation on the apparatus

13.9 Audible Warning Devices.

13.9.1 Audible warning equipment in the form of at least one automotive traffic horn and one electric or electronic siren shall be provided.

13.9.1.1 The siren manufacturer shall certify the siren as meeting the requirements of SAE J1849, *Emergency Vehicle Sirens*.

13.9.1.2* A means shall be provided to allow the activation of the siren within convenient reach of the driver.

13.9.2 Where furnished, air horns, electric siren(s), and electronic siren speaker(s) shall be mounted as low and as far forward on the apparatus as practical.

13.9.3 Audible warning equipment shall not be mounted on the roof of the apparatus.

13.10 Work Lighting.

13.10.1 Ground Lighting.

13.10.1.1 The work area immediately behind the vehicle shall be illuminated to a level of at least 3 fc (30 lx) within a 10 ft × 10 ft (3 m × 3 m) square to the rear of the vehicle.

13.10.1.2 The fire apparatus shall be equipped with lighting that is capable of providing illumination at a minimum level of 1 fc (10 lx) on ground areas within 30 in. (800 mm) of the edge of the apparatus in areas designed for personnel to climb onto the apparatus or descend from the apparatus to the ground level.

13.10.1.3 Lighting designed to provide illumination on areas under the driver and crew riding area exits shall be switchable but activated automatically when the exit doors are opened.

13.10.1.4 All other ground area lighting shall be switchable.

13.10.2 Hose Bed Lighting.

13.10.2.1 If a hose bed is provided, lighting on this hose bed shall be at a level of 3 fc (30 lx) or higher.

13.10.2.2 Lateral hose beds (crosslays) that are permanently covered shall not be required to be illuminated.

13.10.3 Surface Lighting. The apparatus shall have sufficient lighting to provide a minimum level of 1 fc (10 lx) on all work surfaces, steps, and walkways.

13.10.4 Interior Lighting. The apparatus shall have sufficient lighting to provide an average level of 2 fc (20 lx) in the driving and crew compartments.

13.10.5 Compartment Lighting.

13.10.5.1 Each engine compartment and pump compartment shall have a light of at least 20 candlepower (250 lumens)

13.10.5.2 The priming lubricant reservoir, if applicable, shall be illuminated.

13.10.5.3 Each enclosed tool and equipment compartment greater than 4 ft^3 (0.1 m^3) in volume and having an opening greater than 144 $in.^2$ (0.9 m^2) shall have an average minimum level of lighting of 1 fc (10 lx).

13.10.5.4 Compartments such as ladder tunnels, pikepole storage tubes, or underbody compartments designed around the volumetric requirements of specific equipment that can be removed without the use of article illumination shall not be required to have compartment lighting.

13.10.6 Switching. Switches for all work lighting shall be readily accessible.

13.10.7 Protection. The lights shall be arranged or protected to minimize accidental breakage.

13.10.8 Testing. All work lights mounted in wet locations shall be tested in conformance with SAE J575, *Test Methods and Equipment for Lighting Devices and Components for Use on Vehicles Less Than 2032 mm in Overall Width*, and shall comply with the following performance requirements of that standard:

(1) Vibration
(2) Moisture
(3) Dust
(4) Corrosion
(5) High temperature
(6) Low temperature
(7) Durability
(8) Warpage

13.11 Hazard Light.

13.11.1 A red flashing or rotating light, located in the driving compartment, shall be illuminated automatically whenever the apparatus's parking brake is not fully engaged and any of the following conditions exist:

(1) Any passenger or equipment compartment door is open.
(2) Any ladder or equipment rack is not in the stowed position.
(3) Stabilizer system is not in its stowed position.
(4) Powered light tower is extended.
(5) Any other device permanently attached to the apparatus is open, extended, or deployed in a manner that is likely to cause damage to the apparatus if the apparatus is moved.

13.11.2* This section shall not apply to manually raised pole lights with an extension of less than 5 ft (1.5 m).

13.11.3 The hazard light shall be marked with a sign that reads: "Do Not Move Apparatus When Light Is On."

13.12 Backup Alarm. An electric or electronic backup alarm shall be provided that meets the Type D (87 dBA) requirements of SAE J994, *Alarm — Backup — Electric, Laboratory Performance Testing*.

13.13 Stop, Tail, and Directional Lights.

13.13.1 The apparatus shall be equipped with all legally required stop, tail, and directional lights.

Copyright National Fire Protection Association
Provided by IHS under license with NFPA
No reproduction or networking permitted without license from IHS
Not for Resale

13.13.2 Directional lights shall be visible from the front, sides, and rear of the apparatus.

13.13.3 On apparatus 30 ft (10 m) or longer in length, a turn signal shall be mounted approximately midway along the apparatus at approximately running board height.

13.13.4 Equipment shall not be mounted in a manner that obscures the stop, tail, or directional lights.

13.14 Electrical System Performance Tests.

13.14.1* The fire apparatus low voltage electrical system shall be tested as required by this section and the test results certified by the apparatus manufacturer. The certification shall be delivered to the purchaser with the apparatus.

13.14.2 Tests shall be performed when the air temperature is between 0°F and 110°F (–18°C and 43°C).

13.14.3 Test Sequence.

13.14.3.1 The three tests defined in 13.14.3.2 through 13.14.3.4.4 shall be performed in the order in which they appear.

13.14.3.1.1 Before each test, the batteries shall be fully charged until the voltage stabilizes at the voltage regulator set point and the lowest charge current is maintained for 10 minutes.

13.14.3.1.2 Failure of any of these tests shall require a repeat of the sequence.

13.14.3.2 Reserve Capacity Test.

13.14.3.2.1 The engine shall be started and kept running until the engine and engine compartment temperatures are stabilized at normal operating temperatures and the battery system is fully charged.

13.14.3.2.2 The engine shall be shut off and the minimum continuous electrical load shall be activated for 10 minutes.

13.14.3.2.3 All electrical loads shall be turned off prior to attempting to restart the engine.

13.14.3.2.4 The battery system shall then be capable of restarting the engine.

13.14.3.2.5 Failure to restart the engine shall be considered a test failure.

13.14.3.3 Alternator Performance Test at Idle.

13.14.3.3.1 The minimum continuous electrical load shall be activated with the engine running at idle speed.

13.14.3.3.2 The engine temperature shall be stabilized at normal operating temperature.

13.14.3.3.3 The battery system shall be tested to detect the presence of battery discharge current.

13.14.3.3.4 The detection of battery discharge current shall be considered a test failure.

13.14.3.4 Alternator Performance Test at Full Load.

13.14.3.4.1 The total continuous electrical load shall be activated with the engine running up to the engine manufacturer's governed speed.

13.14.3.4.2 The test duration shall be a minimum of 2 hours.

13.14.3.4.3 Activation of the load management system shall be permitted during this test.

13.14.3.4.4 An alarm sounded by excessive battery discharge, as detected by the system required in 13.3.4, or a system voltage of less than 11.8 V dc for a 12 V nominal system or 23.6 V dc for a 24 V nominal system, for more than 120 seconds, shall be considered a test failure.

13.14.4 Low Voltage Alarm Test.

13.14.4.1 Following the completion of the tests described in 13.14.3.2 through 13.14.3.4.4, the engine shall be shut off.

13.14.4.2 With the engine shut off, the total continuous electrical load shall be activated and shall continue to be applied until the excessive battery discharge alarm activates.

13.14.4.3 The battery voltage shall be measured at the battery terminals.

13.14.4.4 The test shall be considered a failure if the alarm has not yet sounded 140 seconds after the voltage drops to 11.70 V for a 12 V nominal system or 23.4 V for a 24 V nominal system.

13.14.4.5 The battery system shall then be able to restart the engine.

13.14.4.6 Failure to restart the engine shall be considered a test failure.

13.15 Documentation. At the time of delivery, the manufacturer shall provide the following:

(1) Documentation of the electrical system performance tests
(2) A written electrical load analysis, including the following:
   (a) The nameplate rating of the alternator
   (b) The alternator rating under the conditions specified in 13.3.2
   (c) Each of the component loads specified in 13.3.3 that make up the minimum continuous electrical load
   (d) Additional electrical loads that, when added to the minimum continuous electrical load, determine the total continuous electrical load
   (e) Each individual intermittent electrical load

Chapter 14 Driving and Crew Areas

14.1 General.

14.1.1 Each crew riding position shall be within a fully enclosed personnel area.

14.1.2 A label that states the number of personnel the vehicle is designed to carry shall be located in an area visible to the driver.

14.1.3* Each crew riding position shall be provided with a seat and an approved seat belt designed to accommodate a person with and without heavy clothing.

14.1.3.1 If available from the chassis manufacturer, the seat belt webbing shall be bright red in color and the buckle portion of the seat belt shall be mounted on a rigid or semirigid stalk such that the buckle remains positioned in an accessible location.

14.1.3.2 All forward-facing seats adjacent to a side wall shall be provided with a Type 2 pelvic and upper torso restraint-style seat belt assembly conforming to the Federal Motor Vehicle Safety Standard (FMVSS) No. 209, "Seat belt assemblies."

14.1.3.3 All seat belt assembly anchorages shall conform to the Federal Motor Vehicle Safety Standard (FMVSS) No. 210, "Seat belt assembly anchorages."

--`,,```,,,,````-`-`,,`,,`,`,,`---

Copyright National Fire Protection Association
Provided by IHS under license with NFPA
No reproduction or networking permitted without license from IHS
Not for Resale

14.1.3.4 Tiller seats shall have a lap belt.

14.1.3.5 Signs that read "Occupants must be seated and belted when apparatus is in motion" shall be visible from each seated position.

14.1.3.6 Each seating position that is not intended to be used during transit shall be individually labeled as follows:

WARNING: THIS SEAT IS NOT TO BE OCCUPIED WHILE VEHICLE IS IN MOTION.

14.1.4 Materials used within the driving and crew compartment shall comply with Federal Motor Vehicle Safety Standard (FMVSS) No. 302, "Flammability of interior materials."

14.1.5 All interior crew and driving compartment door handles shall be designed and installed to protect against accidental or inadvertent opening.

14.1.6 All driving and crew compartment doors shall have at least 96 in.^{2} (62,000 mm^2) of reflective material affixed to the inside of each door.

14.1.7 At any seat location, the maximum noise level shall be 90 dBA without any warning devices in operation, as measured by the test procedure defined in 49 CFR 393.94(c), "Vehicular interior noise levels test procedure," except that the test shall be performed with the vehicle traveling at a steady speed of 45 mph (72 kph) on a level, paved, smooth-surface road.

14.1.8 Seat Head Height.

14.1.8.1* The minimum vertical dimension from the seat H-point to the ceiling for each belted seating position shall be as follows:

(1) For suspension-style seats with independent height adjustment, the minimum vertical dimension shall be 37 in. (940 mm) measured with the height adjustment in its lowest position and the suspension inflated and/or raised to the upper limit of its travel.
(2) For suspension-style seats without independent height adjustment, the minimum vertical dimension shall be 37 in. (940 mm) measured with the suspension inflated and/or raised to the upper limit of its travel.
(3) For nonsuspension-style seats, the minimum vertical dimension shall be 35 in. (882 mm) measured with the seat adjusted to its lowest position.

14.1.8.2 When independent vertical and/or horizontal seat adjustment is provided, it shall be fully adjustable within 10 seconds.

14.1.8.3 The seat-to-ceiling height shall be measured at the lowest surface in the area immediately above the projected area of the seat with any soft headliner material depressed by hand.

14.1.9 Seat Arrangement.

14.1.9.1 Each seating space shall have a minimum width of 22 in. (560 mm) at the shoulder level.

14.1.9.2 Seat cushions shall be a minimum of 18 in. (460 mm) in width and 15 in. (380 mm) from the front of the cushion to the face of the seat back.

14.1.9.3 A back cushion that extends from the face of the seat vertically at least 18 in. (460 mm) and that is a minimum of 18 in. (460 mm) wide shall be provided.

14.1.9.3.1 The back cushion shall be permitted to be split to accommodate a fully recessed SCBA and bracket.

14.1.9.3.2 Where the back cushion is split to accommodate a SCBA, a headrest shall be supplied.

14.1.10 SCBA Mounting.

14.1.10.1* Where SCBA units are mounted within a driving or crew compartment, a positive latching mechanical means of holding the SCBA device in its stowed position shall be provided such that the SCBA unit cannot be retained in the mount unless the positive latch is engaged.

14.1.10.2 The bracket holding device and its mounting shall retain the SCBA unit when subjected to a 9 G force and shall be installed in accordance with the bracket manufacturer's requirements.

14.1.10.3 If the SCBA unit is mounted in a seatback, the release mechanism shall be accessible to the user while seated.

14.1.11 Equipment Mounting.

14.1.11.1 All equipment required to be used during an emergency response shall be securely fastened.

14.1.11.2 All equipment not required to be used during an emergency response, with the exception of SCBA units, shall not be mounted in a driving or crew area unless it is contained in a fully enclosed and latched compartment capable of containing the contents when a 9 G force is applied in the longitudinal axis of the vehicle or a 3 G force is applied in any other direction, or the equipment is mounted in a bracket(s) that can contain the equipment when the equipment is subjected to those same forces.

14.1.12 Steps and access handrails that comply with 15.7.1 through 15.7.3.6 and Section 15.8 shall be provided as necessary for access to all driving and crew compartments.

14.1.13 Where the crew compartment and the driving compartment are separated, prohibiting direct voice communication, a two-way buzzer or two-way voice intercom system shall be provided.

14.1.14 Means of Escape.

14.1.14.1 Any interior area to be occupied by personnel shall have a minimum of two means of escape.

14.1.14.2 Each opening shall be large enough for a person to escape through the opening.

14.2 Cab Tilt Systems. If the apparatus has a cab tilt system, the system shall meet the requirements of 14.2.1 through 14.2.3.2.

14.2.1 If the operation of the tilt cab system is accomplished by hydraulic means, the system shall be equipped with devices to prevent the motion of the cab in the event of any hydraulic hose failure.

14.2.2 If the cab has a powered tilting system, the system shall be interlocked to operate only when the parking brake is engaged and shall be configured so that the failure of a single component will not result in unintentional tilting of the cab.

14.2.3 The control of the cab tilt mechanism shall be accomplished clear of the cab travel area while still having the travel area in clear view.

14.2.3.1 A mechanical means shall be provided to hold the cab in a fully raised position.

Copyright National Fire Protection Association
Provided by IHS under license with NFPA
No reproduction or networking permitted without license from IHS
Not for Resale

14.2.3.2 If the cab is able to be raised to a defined intermediate position, a mechanical means shall also be provided to hold the cab in that intermediate position.

14.3 Driving Compartment.

14.3.1* A fully enclosed driving compartment with seating capacity for not less than two persons shall be provided except at a tiller operator's driving position. *(See 14.4.1.)*

14.3.2 Driver's Seat.

14.3.2.1 The driver's seat shall be readily adjustable by the driver.

14.3.2.2 The seat shall be arranged to accommodate a human conforming to at least the fifth percentile female through 95th percentile male as defined in SAE J833, *Human Physical Dimensions*.

14.3.3* The passenger side mirror shall be so mounted that the driver has a clear view of the mirror when the passengers are in their normal seated positions.

14.3.4 Instrumentation and Controls.

14.3.4.1 The following instrumentation and controls shall be mounted in the driving compartment and shall be identified and visible to the driver while seated:

(1) Speedometer
(2) Tachometer
(3) Odometer
(4) Oil pressure indicator or gauge
(5) Coolant temperature indicator or gauge
(6) Automatic transmission temperature indicator or gauge, if applicable
(7) Voltmeter
(8) Hazard indicator light *(see Section 13.11)*
(9) Air pressure gauge(s), if applicable
(10) Turn signal control and indicator lights
(11) Headlight/DOT light switch
(12) High-beam headlight switch and indicator
(13) Fuel level gauge(s)
(14) Master ignition switch (if a key is provided, it shall be unable to be removed from the driving compartment interior)
(15) Heater/defroster controls
(16) Warning lights and siren switches
(17) Master electrical load switch
(18) "Battery on" indicator light
(19) Windshield wipers and windshield washer control
(20) PTO-engaged indicator, if applicable
(21) Pump engagement controls, if applicable

14.3.4.2 Controls and switches that are expected to be operated by the driver while the apparatus is in motion shall be within convenient reach for the driver.

14.4 Tractor-Drawn Vehicles. Where a tractor-drawn vehicle with tillered steering is provided, the requirements of this section also shall apply.

14.4.1 A fully enclosed tiller operator's compartment with seating for one person shall be provided at the rear wheel's steering position.

14.4.2 No side compartmentation shall be installed that obscures the ability of the tiller operator to see the tiller axle fender area.

14.4.3* Seat Arrangement.

14.4.3.1 The manufacturer shall provide a seat with an approved seat belt within the enclosure.

14.4.3.2 The seating space shall be a minimum of 22 in. (560 mm) in width at the shoulder level.

14.4.3.3 The seat cushion shall be a minimum of 18 in. (460 mm) in width and 15 in. (380 mm) from the front of the cushion to the face of the seat back.

14.4.3.4 A back cushion shall be provided.

14.4.3.5 The seat shall have an adjustment range of at least 3 in. (76 mm) from front to rear and be adjustable by the tiller operator.

14.4.4 A warning indicator in the driving compartment shall activate if the parking brake is released and the tiller operator is not signaling his/her presence.

14.4.5 Communications.

14.4.5.1 A two-way buzzer system or a two-way voice intercom shall be provided for communication between the driver and the tiller operator.

14.4.5.2 The communication system shall be operable without the tiller operator having to take his/her hands off the steering wheel.

14.4.6 A heater or ventilation system and defroster shall be provided.

14.4.7 A windshield wiper and washer fluid system shall be provided.

14.4.8 The following instrumentation and controls shall be mounted in the tiller operator's compartment and shall be identified and visible to the tiller operator while seated:

(1) Heater/defroster controls
(2) Turn signal indicator lights
(3) Two-way buzzer signal switch
(4) Windshield wiper and washer fluid control

14.4.9 Controls and switches that are expected to be operated by the tiller operator while the apparatus is in motion shall be within convenient reach for that operator.

14.4.10 Exterior rearview mirrors shall be provided at the tiller position.

Chapter 15 Body, Compartments, and Equipment Mounting

15.1 Compartmentation.

15.1.1* Any enclosed external compartments shall be weather resistant and ventilated and have provisions for drainage of moisture.

15.1.2 All electrical junctions or wiring within compartments shall be protected from mechanical damage resulting from equipment stored in the compartment.

15.2* Radio Space. A protected space or compartment shall be provided for the installation of radio equipment.

Copyright National Fire Protection Association
Provided by IHS under license with NFPA
No reproduction or networking permitted without license from IHS
Not for Resale

15.3 Equipment Containment.

15.3.1* Equipment holders or compartments shall be provided for all tools, equipment, and other items that are on the apparatus.

15.3.2* Equipment holders shall be attached and shall be designed so that equipment remains in place under all vehicle operating conditions.

15.3.3 All tools and equipment shall be readily accessible.

15.4 Powered Equipment Racks. When a powered equipment rack is provided, it shall meet the requirements of this section.

15.4.1 The equipment rack shall be constructed of materials that are capable of carrying the equipment that is intended to be mounted on the equipment rack.

15.4.2 A lock shall be provided that will retain the equipment rack in the road travel position when the vehicle is in motion.

15.4.3 An interlock shall be provided to prevent operation of the equipment rack unless the apparatus parking brake has been activated.

15.4.4 Controls shall be provided in a position where the operator can visually follow the travel of the equipment rack.

15.4.5 A visual signal shall be provided at the driver's position to indicate that the equipment rack is in motion, or in the down position, and that the parking brake is not engaged.

15.4.6 Flashing lights facing the front and rear shall be provided on the equipment rack and shall be illuminated whenever the equipment rack is in the down position.

15.4.7 The outward ends of the equipment rack that protrude beyond the body of the apparatus shall have reflective material to indicate a hazard or obstruction.

15.5* SCBA Storage. Storage of complete SCBA units or SCBA cylinders shall be arranged so as to prevent damage, injury, or abrasion to the SCBA from other equipment stored in the general area.

15.5.1 If a SCBA unit or cylinder is stored within a driving or crew compartment, the mounting shall comply with the requirements of Section 15.5 and 14.1.10.

15.5.2 If the SCBA cylinder is mounted in a vertical position with the valve down, it shall be supported with a brace or yoke under the cylinder or valve area to prevent downward movement.

15.5.3 The holding or clamping device shall not injure, wear, scrape, or otherwise affect the SCBA unit or cylinder, including damage to the paint or reflective finish, while the cylinder is being placed in, stored in, or removed from the holder.

15.5.4 The SCBA storage area shall be a ventilated, dry area away from all heat sources that could damage the SCBA (e.g., mufflers, engines).

15.5.5* Vertical Storage of SCBA Cylinders in Tubes.

15.5.5.1 The base of the storage tube shall have a rubber, plastic, or similar device to prevent wear on the cylinder and to prevent damage if the cylinder is accidentally dropped into the storage position.

15.5.5.2 Each storage tube shall have a drain to prevent accumulation of moisture.

15.5.6* Horizontal Storage of SCBA Cylinders.

15.5.6.1 The storage rack or tube assembly shall be designed to prevent the cylinder from accidentally sliding out from the storage rack or tube and shall be installed so as to keep the cylinder from hitting or rubbing on compartment doors by preventing movement or shifting when in transit.

15.5.6.2 The rear wall of each SCBA storage area or tube shall be covered with a rubber, plastic, or similar material to prevent wear on cylinders.

15.6 Pump and Plumbing Access.

15.6.1 One or more doors or panels that open or are removable without the use of tools shall be provided to allow visual inspection or access for checking the fire pump and plumbing area.

15.6.2 The clear opening shall have no one dimension measure less than 18 in. (460 mm).

15.6.3 Additional door(s) or panel(s) that require no more than standard tools to be opened or removed shall be provided for access to the pump and plumbing area.

15.6.4 All valves, gauges, controls, and other plumbing equipment shall be accessible for service and replacement.

15.6.5* The clear space required by the pump manufacturer to perform in-truck overhaul and maintenance shall be provided.

15.7 Stepping, Standing, and Walking Surfaces.

15.7.1* Steps, platforms, or permanently attached ladders shall be provided so that fire fighters have access to all working and storage areas of the apparatus.

15.7.1.1 The maximum stepping height shall not exceed 18 in. (460 mm), with the exception of the ground to first step, which shall not exceed 24 in. (610 mm).

15.7.1.1.1 A permanently attached supplemental access/egress means from the ground to these steps, platforms, or permanently attached ladders shall be provided where the ground to the first step, platform, or ladder exceeds 24 in. (610 mm).

15.7.1.1.2 The supplemental access means shall consist of a step(s), platform(s), or ladder(s).

15.7.1.1.3 The ground to first step height shall be determined with the apparatus on level ground.

15.7.1.1.4 Where the apparatus is supplied with stabilizers, the ground to first step height shall be determined with the apparatus on level ground and the stabilizers deployed in accordance with the manufacturer's instructions so that the aerial device meets the stability requirements of Section 20.21.

15.7.1.2* All steps shall have a minimum area of 35 $in.^2$ (22,580 mm^2), shall be of such a shape that a 5 in. (125 mm) diameter disk does not overlap any side when placed on the step, and shall be arranged to provide at least 8 in. (200 mm) of clearance between the leading edge of the step and any obstruction.

15.7.1.3 All platforms shall have a minimum depth of 8 in. (200 mm) from the leading edge of the platform to any obstruction.

15.7.1.4 All ladders shall have at least 7 in. (175 mm) of clearance between any rung and the body or other obstruction.

15.7.2 All steps, platforms, or ladders shall sustain a minimum static load of 500 lb (227 kg) without deformation.

Copyright National Fire Protection Association
Provided by IHS under license with NFPA
No reproduction or networking permitted without license from IHS
Not for Resale

15.7.3* Slip Resistance.

15.7.3.1 All materials used for exterior surfaces designated as stepping, standing, and walking areas and all interior steps shall have a minimum slip resistance in any orientation of 0.68 when tested wet using the English XL tester in accordance with ASTM F 1679, *Standard Test Method for Using a Variable Incidence Tribometer (VIT)*, or 0.52 when tested wet using the Brungraber Mark II tester in accordance with ASTM F 1677, *Standard Test Method for Using a Portable Inclinable Articulated Strut Slip Test (PIAST)*.

15.7.3.2 All materials used for interior floors shall have a minimum slip resistance in any orientation of 0.58 when tested dry using the English XL tester in accordance with ASTM F 1679, *Standard Test Method for Using a Variable Incidence Tribometer (VIT)*, or 0.47 when tested dry using the Brungraber Mark II tester in accordance with ASTM F 1677, *Standard Test Method for Using a Portable Inclinable Articulated Strut Slip Tester (PIAST)*.

15.7.3.3 A standard Neolite® test sensor shall be used with both the English XL tester and the Brungraber Mark II tester.

15.7.3.4 Sampling Strategy.

15.7.3.4.1 For uniformly patterned materials, at least 16 readings shall be taken on each sample.

15.7.3.4.1.1 Each reading shall be taken 90 degrees clockwise from the previous orientation, resulting in at least four readings in each orientation.

15.7.3.4.1.2 The readings shall be averaged and reported as the slip resistance for the material.

15.7.3.4.2 For directionally patterned materials, at least 32 readings shall be taken on each sample.

15.7.3.4.2.1 Each reading shall be taken 45 degrees clockwise from the previous orientation, resulting in at least four readings in each orientation.

15.7.3.4.2.2 The four readings in each direction shall be averaged and reported as the slip resistance for the material in that orientation.

15.7.3.5 The contractor shall supply at the time of delivery of the apparatus a certification that all materials used for exterior surfaces designated as stepping, standing, and walking areas, all interior steps, and all interior floors meet the requirements of 15.7.3.

15.7.3.6 Where the fuel fill is located at or near a stepping surface, the surface shall be constructed of an open grate–type material to facilitate draining of accidentally spilled fuel to lessen any slipping hazard.

15.7.4 A sign shall be located on the vehicle at the rear step areas and at any cross walkways to warn personnel that riding in or on these areas while the vehicle is in motion is prohibited.

15.8 Access Handrails.

15.8.1 Access handrails shall be provided at each entrance to a driving or crew compartment and at each position where steps or ladders for climbing are located.

15.8.2 Access handrails shall be constructed of, or covered with, a slip-resistant, noncorrosive material.

15.8.3 Handrails shall be between 1 in. and 1⅝ in. (25 mm and 42 mm) in diameter and have a minimum clearance between the handrails and any surface of at least 2 in. (52 mm).

15.8.4* All handrails shall be designed and mounted to reduce the possibility of hand slippage and to avoid snagging of hose, equipment, or clothing.

15.9 Metal Finish.

15.9.1 Where dissimilar metals that pose a galvanic corrosion or reactive threat are to be mounted together, the mounting base material shall have an isolation barrier prior to assembly to prevent dissimilar metal reaction.

15.9.2* Painting.

15.9.2.1* All exposed ferrous metal surfaces that are not plated or stainless steel shall be cleaned and prepared and shall be painted or coated.

15.9.2.2 The paint or coating, including any primer, shall be applied in accordance with the paint or coating manufacturer's recommendation.

15.9.2.3 The purchaser shall specify if nonferrous body components are to be painted and if any lettering, numbering, or decorative striping is to be furnished.

15.9.3 A reflective stripe(s) shall be affixed to the perimeter of the apparatus.

15.9.3.1 The stripe or combination of stripes shall be a minimum of 4 in. (100 mm) in total width and shall conform to the minimum requirements of ASTM D 4956, *Standard Specification for Retroreflective Sheeting for Traffic Control*, Type I, Class 1 or Class 3.

15.9.3.2* At least 50 percent of the cab and body length on each side, at least 50 percent of the width of the rear, and at least 25 percent of the width of the front of the apparatus shall have the reflective material affixed to it.

15.9.3.3 A graphic design meeting the reflectivity requirements of 15.9.3.1 shall be permitted to replace all or part of the required striping material if the design or combination thereof covers at least the same perimeter length(s) required by 15.9.3.2.

15.10* Hose Storage. If a hose storage area(s) is provided, it shall comply with this section.

15.10.1* The hose storage area(s) shall be reinforced at the corners.

15.10.2 The bottom shall be made of removable sections fabricated from noncorrosive materials.

15.10.3* The bottom shall be constructed to prevent the accumulation of water and allow ventilation to aid in drying of hose.

15.10.4 The interior shall be smooth and free from all projections, such as nuts, sharp angles, or brackets, that might cause damage to the hose.

15.10.5 Reels, handrails, ladders, and equipment holders shall be placed so as not to obstruct the laying or removal of hose from the storage area.

15.10.6 Any hose storage area designed to carry 2½ in. (65 mm) or larger hose shall be a minimum of 5 ft (1.5 m) in length.

15.11* Receivers and Anchors for Rope and Removable Winches.

15.11.1 Receivers or anchors installed at any location on the apparatus for use as removable winch anchors shall be designed and affixed to provide at least a 1.5 to 1 safety factor over the load rating of the removable winch.

Copyright National Fire Protection Association
Provided by IHS under license with NFPA
No reproduction or networking permitted without license from IHS
Not for Resale

15.11.2 Receivers or anchors installed at any location on the apparatus for use with rope operations shall be designed and affixed to the apparatus to provide at least a 5 to 1 safety factor over the breaking strength of the rope that will be used.

15.11.3 A label shall be placed on or near each receiver or anchor that states the maximum winch load rating and the maximum rope load rating that the receiver or anchor can support.

15.12 Slip-on Fire-Fighting Module. If the pump, piping, and tank are built as a slip-on, self-contained unit, it shall meet the requirements of this section.

15.12.1 The major components of the slip-on unit, pump, pumping engine, tank, electrical, and plumbing shall meet the requirements of the applicable chapters of this standard covering those components.

15.12.2* The weight of a completed skid-mounted fire-fighting package, including fuel, oil, and standard equipment carried, shall be distributed on the frame so as to provide a balanced unit when the package is lifted or moved.

15.12.3 Intake and discharge piping shall not interfere with the routine maintenance of the pump, engine, or auxiliary systems and shall not unduly restrict the servicing of these components.

15.12.4 Mounting.

15.12.4.1 The slip-on unit shall be mounted in a manner that allows access to the engine, pump, and auxiliary systems for routine maintenance.

15.12.4.2 The slip-on unit shall be removable using common hand tools.

15.12.4.3 The slip-on unit shall be mounted in a manner that prevents damage by vibration.

15.12.4.4 Special anchorage shall be provided on the vehicle chassis and on the skid-mounted fire-fighting package to secure the skid-mounted fire-fighting package to the vehicle chassis.

15.12.4.5 The anchorage described in 15.12.4.4 shall be designed to prevent movement of the unit during rapid acceleration or deceleration.

Chapter 16 Fire Pumps and Associated Equipment

16.1 Application. If the apparatus is equipped with a fire pump, the provisions of this chapter shall apply.

16.2 Design and Performance Requirements.

16.2.1 Fire Pump Rated Capacity.

16.2.1.1 The fire pump shall be mounted on the apparatus and shall have a minimum rated capacity of 250 gpm (1000 L/min) at 150 psi (1000 kPa) net pump pressure.

16.2.1.2 Pumps of higher capacity shall be rated at one of the capacities specified in Table 16.2.4.1(a).

16.2.2* Where the apparatus is designed for pump-and-roll operations, the vehicle drive engine and drive train shall be arranged so that the pump can deliver at least 20 gpm (76 L/min) at a gage pressure of 80 psi (550 kPa), while the fire apparatus is moving at 2 mph (3.2 kmph) or less.

16.2.3 Pumping System Capability.

16.2.3.1 The pumping system provided shall be capable of delivering the following:

(1) One hundred percent of rated capacity at 150 psi (1000 kPa) net pump pressure
(2) Seventy percent of rated capacity at 200 psi (1400 kPa) net pump pressure
(3) Fifty percent of rated capacity at 250 psi (1700 kPa) net pump pressure

16.2.3.2 When dry, the pump system shall be capable of meeting the requirements of 16.2.3.2.1 through 16.2.3.2.4.

16.2.3.2.1 Where pumps are rated at less than 1500 gpm (6000 L/min), they shall be capable of taking suction through 20 ft (6 m) of suction hose under the conditions specified in Table 16.2.4.1(a) for the rated capacity of the pump and discharging water in not more than 30 seconds.

16.2.3.2.2 Where pumps are of 1500 gpm (6000 L/min) or larger capacity, they shall be capable of taking suction through 20 ft (6 m) of suction hose under the conditions specified in Table 16.2.4.1(a) for the rated capacity of the pump and discharging water in not more than 45 seconds.

16.2.3.2.3 Where the pump system includes an auxiliary 4 in. (100 mm) or larger intake pipe having a volume of 1 ft^3 (0.03 m^3) or more, an additional 15 seconds beyond that allowed in 16.2.3.2.1 and 16.2.3.2.2 shall be permitted.

16.2.3.2.4* Where pumps are of the parallel/series type, they shall complete the requirements of 16.2.3.2.1 through 16.2.3.2.3 in both parallel and series operation.

16.2.3.3 Vacuum.

16.2.3.3.1 The completed pumping system shall be capable of developing a vacuum of 22 in. Hg (75 kPa) at altitudes up to 2000 ft (600 m) by means of the pump priming device and sustaining the vacuum for at least 5 minutes with a loss not to exceed 10 in. Hg (34 kPa).

16.2.3.3.2 The requirement in 16.2.3.3.1 shall be met with all intake valves open, all intakes capped or plugged, and all discharge caps removed and without the use of the pump primer during the 5 minute period.

16.2.4 Pump Suction Capability.

16.2.4.1* The pump manufacturer shall certify that the fire pump is capable of pumping 100 percent of rated capacity at 150 psi (1000 kPa) net pump pressure from draft through 20 ft (6 m) of suction hose with a strainer attached under the following conditions:

(1) An altitude of 2000 ft (600 m) above sea level
(2) Atmospheric pressure of 29.9 in. Hg (101 kPa) (corrected to sea level)
(3) Water temperature of 60°F (15.6°C)
(4) Suction hose size, number of hose, and lift as indicated in Table 16.2.4.1(a)
(5) Friction and entrance loss in suction hose, including strainer, as given in Table 16.2.4.1(b) or Table 16.2.4.1(c)

Copyright National Fire Protection Association
Provided by IHS under license with NFPA
No reproduction or networking permitted without license from IHS
Not for Resale

Table 16.2.4.1(a) Suction Hose Size, Number of Suction Lines, and Lift for Fire Pumps

Rated Capacity		Maximum Suction Hose Size		Maximum Number of Suction Lines*	Maximum Lift	
gpm	L/min	in.	mm		ft	m
250	1,000	3	75	1	10	3
300	1,100	3	75	1	10	3
350	1,300	4	100	1	10	3
500	2,000	4	100	1	10	3
750	3,000	4½	110	1	10	3
1,000	4,000	6	150	1	10	3
1,250	5,000	6	150	1	10	3
1,500	6,000	6	150	2	10	3
1,750	7,000	6	150	2	8	2.4
2,000	8,000	6	150	2	8	2.4
2,000	8,000	8	200	1	6	1.8
2,250	9,000	6	150	3	6	1.8
2,250	9,000	8	200	1	6	1.8
2,500	10,000	6	150	3	6	1.8
2,500	10,000	8	200	1	6	1.8
3,000	12,000	6	150	4	6	1.8
3,000	12,000	8	200	2	6	1.8

*Where more than one suction line is used, all suction lines do not have to be the same hose size.

16.2.4.2* The pump manufacturer shall certify that the pump is capable of pumping rated capacity at 150 psi (1000 kPa) net pump pressure at any of the following special conditions when these conditions are specified by the purchaser:

(1) At an elevation above 2000 ft (600 m)
(2) At lifts higher than those listed in Table 16.2.4.1(a), or through more than 20 ft (6 m) of suction hose, or both
(3) For pumps having a rated capacity of 1500 gpm (6000 L/min) or larger, through a single suction hose only, or through the number of hose listed in Table 16.2.4.1(a) attached to one side of the apparatus only

16.3 Pumping Engine Requirements.

16.3.1 The apparatus manufacturer shall approve the use of the pumping engine for stationary pumping applications based on the size of the fire apparatus and the rating of the pump being furnished.

16.3.2 Engine Speed.

16.3.2.1 The engine shall be capable of performing the pumping tests herein specified without exceeding the maximum governed speed of the engine as shown on a certified brake horsepower curve of the type of engine used without accessories.

16.3.2.2 The brake horsepower curve certification shall be signed by a responsible official of the engine manufacturer.

16.3.3 On fire pumps of 750 gpm (3000 L/min) or greater, the engine/pump combination shall be capable of delivering the rated pump capacity at 165 psi (1100 kPa) net pump pressure.

16.3.4* If a separate pumping engine is provided, it shall meet the requirements of 12.2.1.1, 12.2.1.2, 12.2.1.6, 12.2.2, 12.2.3.1, 12.2.3.2, 12.2.4, 12.2.5, and Sections 13.4 and 13.5.

16.3.5 A supplementary heat exchanger cooling system shall be provided for the pump drive engine.

16.3.5.1 Valving shall be installed to permit water from the discharge side of the pump to cool the coolant circulating through the engine cooling system without intermixing.

16.3.5.2 The heat exchanger shall maintain the temperature of the coolant in the pump drive engine not in excess of the engine manufacturer's temperature rating under all pumping conditions.

16.3.5.3 A drain(s) shall be provided to allow draining of the heat exchanger so as to prevent damage from freezing.

16.3.6 Indicator or Light.

16.3.6.1 Where a separate engine is used to drive the pump, an indicator or light that is energized when the pump engine is running shall be provided in the driving compartment.

16.3.6.2 The indicator or light shall be marked with a label that reads "Pump Engine Running."

16.4 Power Train Capability.

16.4.1 All components in the power train from the engine to the fire pump shall be capable of transmitting the torque necessary to power the pump, as installed in the apparatus, for the pump performance points specified in 16.2.3.1 without exceeding the component manufacturer's continuous duty torque rating.

16.4.2 When pumping continuously at each of the pump performance points specified in 16.2.3.1, lubricant temperatures in any power train component installed in the apparatus from the engine to the pump shall not exceed the component manufacturer's recommendation for maximum temperature.

16.4.3* A means shall be provided to limit the nominal net engine output to a torque level equal to the nominal continuous duty torque rating of the weakest component, or to a level equal to the sum of the nominal continuous duty torque ratings of multiple components, if there are multiple devices to be driven simultaneously.

Copyright National Fire Protection Association
Provided by IHS under license with NFPA
No reproduction or networking permitted without license from IHS
Not for Resale

Table 16.2.4.1(b) Friction and Entrance Loss in 20 ft of Suction Hose, Including Strainer (inch-pound units)

Flow Rate (gpm)	Suction Hose Size (inside diameter)									
	One 3 in.		One 3½ in.		One 4 in.		One 4½ in.			
	ft water	in. Hg	ft water	in. Hg	ft water	in. Hg	ft water	in. Hg		
250	5.2 (1.2)	4.6								
175	2.6 (0.6)	2.3								
125	1.4 (0.3)	1.2								
300	7.5 (1.7)	6.6	3.5 (0.8)	3.1						
210	3.8 (0.8)	3.4	1.8 (0.4)	1.6						
150	1.9 (0.4)	1.7	0.9 (0.2)	0.8						
350			4.8 (1.1)	4.2	2.5 (0.7)	2.1				
245			2.4 (0.5)	2.1	1.2 (0.3)	1.1				
175			1.2 (0.3)	1.1	0.7 (0.1)	0.6				
500					5.0 (1.3)	4.4	3.6 (0.8)	3.2		
350					2.5 (0.7)	2.1	1.8 (0.4)	1.6		
250					1.3 (0.4)	1.1	0.9 (0.3)	0.8		
	One 4 in.		One 4½ in.		One 5 in.		One 6 in.		Two 4½ in.	
	ft water	in. Hg	ft water	in. Hg	ft water	in. Hg	ft water	in. Hg	Ft water	in. Hg
750	11.4 (2.9)	9.8	8.0 (1.6)	7.1	4.7 (0.9)	4.2	1.9 (0.4)	1.7		
525	5.5 (1.5)	4.9	3.9 (0.8)	3.4	2.3 (0.5)	2.0	0.9 (0.2)	0.8		
375	2.8 (0.7)	2.5	2.0 (0.4)	1.8	1.2 (0.2)	1.1	0.5 (0.1)	0.5		
1000			14.5 (2.8)	12.5	8.4 (1.6)	7.4	3.4 (0.6)	3.0		
700			7.0 (1.4)	6.2	4.1 (0.8)	3.7	1.7 (0.3)	1.5		
500			3.6 (0.8)	3.2	2.1 (0.4)	1.9	0.9 (0.2)	0.8		
1250					13.0 (2.4)	11.5	5.2 (0.9)	4.7	5.5 (1.2)	4.9
875					6.5 (1.2)	5.7	2.6 (0.5)	2.3	2.8 (0.7)	2.5
625					3.3 (0.7)	2.9	1.3 (0.3)	1.1	1.4 (0.3)	1.2
1500							7.6 (1.4)	6.7	8.0 (1.6)	7.1
1050							3.7 (0.7)	3.3	3.9 (0.8)	3.4
750							1.9 (0.4)	1.7	2.0 (0.4)	1.8
1750							10.4 (1.8)	9.3	11.0 (2.2)	9.7
1225							5.0 (0.9)	4.6	5.3 (1.1)	4.7
875							2.6 (0.5)	2.3	2.8 (0.6)	2.5
2000									14.5 (2.8)	12.5
1400									7.0 (1.4)	6.2
1000									3.6 (0.8)	3.2
	Two 5 in.		Two 6 in.		Three 6 in.		One 8 in.		Two 8 in.	
	ft water	in. Hg	ft water	in. Hg	ft water	in. Hg	ft water	in. Hg	ft water	in. Hg
1500	4.7 (0.9)	4.2	1.9 (0.4)	1.7						
1050	2.3 (0.5)	2.0	0.9 (0.3)	0.8						
750	1.2 (0.2)	1.1	0.5 (0.1)	0.5						
1750	6.5 (1.2)	5.7	2.6 (0.5)	2.3						
1225	3.1 (0.7)	2.7	1.2 (0.3)	1.1						
875	1.6 (0.3)	1.4	0.7 (0.2)	0.6						
2000	8.4 (1.6)	7.4	3.4 (0.6)	3.0			4.3 (1.1)	3.8		
1400	4.1 (0.8)	3.7	1.7 (0.3)	1.5			2.0 (0.6)	1.8		
1000	2.1 (0.4)	1.9	0.9 (0.2)	0.8			1.0 (0.3)	0.9		
2250	10.8 (2.2)	9.5	4.3 (0.8)	3.8	2.0 (0.5)	1.8	5.6 (1.4)	5.0	1.2 (0.4)	1.1
1575	5.3 (1.1)	4.7	2.2 (0.4)	1.9	1.0 (0.2)	0.9	2.5 (0.9)	2.2	0.6 (0.2)	0.5
1125	2.8 (0.5)	2.5	1.1 (0.2)	1.0	0.5 (0.1)	0.5	1.2 (0.4)	1.1	0.3 (0.1)	0.3
2500	13.0 (2.4)	11.5	5.2 (0.9)	4.7	2.3 (0.6)	2.0	7.0 (1.7)	6.2	1.5 (0.4)	1.3
1750	6.5 (1.2)	5.7	2.6 (0.5)	2.3	1.2 (0.2)	1.1	3.2 (1.0)	2.8	0.8 (0.2)	0.7
1250	3.3 (0.7)	2.9	1.3 (0.3)	1.1	0.6 (0.1)	0.5	1.5 (0.4)	1.3	0.4 (0.1)	0.4
3000			7.6 (1.4)	6.9	3.4 (0.6)	3.0	10.1 (3.0)	9.0	2.3 (0.6)	2.1
2100			3.7 (0.7)	3.4	1.7 (0.3)	1.5	4.7 (1.3)	4.2	1.0 (0.3)	0.9
1500			1.9 (0.4)	1.7	0.9 (0.2)	0.8	2.3 (0.7)	2.1	0.6 (0.2)	0.5

Note: Figures in parentheses indicate increment to be added or subtracted for each 10 ft of hose greater than or less than 20 ft.

Copyright National Fire Protection Association
Provided by IHS under license with NFPA
No reproduction or networking permitted without license from IHS
Not for Resale

Table 16.2.4.1(c) Friction and Entrance Loss in 6 m of Suction Hose, Including Strainer (metric units)

Flow Rate (L/min)	Suction Hose Size (inside diameter)							
	One 75 mm		One 90 mm		One 100 mm		One 110 mm	
	m water	kPa	m water	kPa	m water	kPa	m water	kPa
1,000	1.6 (0.04)	16						
700	0.8 (0.02)	8						
500	0.4 (0.01)	4						
1,100	2.2 (0.05)	22	1.1 (0.02)	10				
770	1.1 (0.02)	12	0.6 (0.01)	5				
550	0.6 (0.01)	6	0.3 (0.01)	3				
1,300			1.5 (0.03)	14	0.7 (0.02)	7		
910			0.7 (0.01)	7	0.4 (0.01)	4		
650			0.4 (0.01)	4	0.2 (0.01)	2		
2,000					1.5 (0.04)	15	1.1 (0.02)	11
1,400					0.7 (0.02)	7	0.5 (0.01)	5
1,000					0.4 (0.01)	4	0.3 (0.01)	3

	One 100 mm		One 110 mm		One 125 mm		One 150 mm		Two 110 mm	
	m water	kPa	m water	kPa	m water	kPa	m water	kPa	m water	kPa
3,000	3.5 (0.09)	33	2.4 (0.05)	24	1.4 (0.03)	14	0.6 (0.01)	6		
2,100	1.7 (0.05)	17	1.2 (0.02)	11	0.7 (0.01)	7	0.3 (0.01)	3		
1,500	0.9 (0.02)	8	0.6 (0.01)	6	0.4 (0.01)	4	0.2 (0.01)	2		
4,000			4.4 (0.08)	42	2.6 (0.05)	25	1.0 (0.02)	10		
2,800			2.1 (0.04)	21	1.2 (0.02)	13	0.5 (0.01)	5		
2,000			1.1 (0.02)	11	0.6 (0.01)	6	0.3 (0.01)	3		
5,000					4.0 (0.07)	39	1.6 (0.03)	16	1.7 (0.04)	17
3,500					2.0 (0.04)	19	0.8 (0.02)	8	0.9 (0.02)	8
2,500					1.0 (0.02)	10	0.4 (0.01)	4	0.4 (0.01)	4
6,000							2.3 (0.04)	23	2.4 (0.05)	24
4,200							1.1 (0.02)	11	1.2 (0.02)	12
3,000							0.6 (0.01)	6	0.6 (0.01)	6
7,000							3.2 (0.05)	31	3.6 (0.07)	33
4,900							1.5 (0.03)	16	1.6 (0.03)	16
3,500							0.8 (0.02)	8	0.9 (0.02)	8
8,000									4.4 (0.08)	42
5,600									2.1 (0.04)	21
4,000									1.1 (0.02)	11

	Two 125 mm		Two 150 mm		Three 150 mm		One 200 mm		Two 200 mm	
	m water	kPa	m water	kPa	m water	kPa	m water	kPa	m water	kPa
6,000	1.4 (0.03)	14	0.6 (0.01)	6						
4,200	0.7 (0.02)	7	0.3 (0.01)	3						
3,000	0.4 (0.01)	4	0.2 (0.01)	2						
7,000	2.0 (0.04)	19	0.8 (0.02)	8						
4,900	0.9 (0.02)	9	0.4 (0.01)	4						
3,500	0.5 (0.01)	5	0.2 (0.01)	2						
8,000	2.6 (0.05)	25	1.0 (0.02)	10			1.3 (0.03)	13		
5,600	1.2 (0.02)	13	0.5 (0.01)	5			0.6 (0.02)	6		
4,000	0.6 (0.01)	6	0.3 (0.01)	3			0.3 (0.01)	3		
9,000	3.3 (0.07)	32	1.3 (0.02)	13	0.6 (0.01)	6	1.7 (0.05)	17	0.4 (0.01)	4
6,300	1.6 (0.03)	16	0.7 (0.01)	6	0.3 (0.01)	3	0.7 (0.03)	7	0.2 (0.01)	2
4,500	0.9 (0.02)	8	0.3 (0.01)	3	0.2 (0.01)	2	0.4 (0.01)	4	0.1 (0.01)	1
10,000	4.0 (0.07)	39	1.6 (0.03)	16	0.7 (0.02)	7	2.1 (0.05)	21	0.5 (0.01)	4
7,000	2.0 (0.04)	19	0.8 (0.02)	8	0.4 (0.01)	4	1.0 (0.03)	9	0.2 (0.01)	2
5,000	1.0 (0.02)	10	0.4 (0.01)	4	0.2 (0.01)	2	0.5 (0.01)	4	0.1 (0.01)	1
12,000			2.3 (0.04)	23	1.0 (0.02)	10	3.0 (0.09)	30	0.7 (0.02)	7
8,400			1.1 (0.02)	12	0.5 (0.01)	5	1.4 (0.04)	14	0.3 (0.01)	3
6,000			0.6 (0.01)	6	0.3 (0.01)	3	0.7 (0.02)	7	0.2 (0.01)	2

Note: Figures in parentheses indicate increment to be added or subtracted for each 3 m of hose greater than or less than 6 m.

Copyright National Fire Protection Association
Provided by IHS under license with NFPA
No reproduction or networking permitted without license from IHS
Not for Resale

16.5 Construction Requirements.

16.5.1* Wetted moving parts shall be constructed of a corrosion-resistant material.

16.5.2 Hydrostatic Test.

16.5.2.1 The pump body shall be subjected to a hydrostatic test to a gauge pressure of 500 psi (3400 kPa) minimum for 10 minutes.

16.5.2.2 The pump manufacturer shall provide a certificate of completion for the hydrostatic test.

16.5.3 Where an auxiliary pump is provided in combination with a fire pump and where the pumps are interconnected so that pressure from one pump can be transmitted to the other pump, check valves, intake or discharge relief valves, pump drive gear ratios, or other automatic means shall be provided to avoid pressurizing either pump beyond its maximum rated hydrostatic pressure.

16.5.4 The entire discharge and intake piping system, valves, drain cocks and lines, and intake and outlet closures, excluding the tank fill and tank-to-pump lines on the tank side of the valves in those lines, shall be capable of withstanding a minimum hydrostatic burst gauge pressure of 500 psi (3400 kPa).

16.5.5 Pulsation-Free Fire Streams.

16.5.5.1 The pump shall be capable of producing fire streams that are free from pulsations.

16.5.5.2 When an accumulator is used to provide pulsation-free fire streams, the accumulator shall be constructed and tested in accordance with the ASME *Boiler and Pressure Vessel Code*, Section VIII, Division 2.

16.5.6 The pump shall allow a positive pressure water source to directly add to the pump's net pump pressure.

16.6 Pump Intake Connections.

16.6.1* The pump shall have at least the number of intake(s) required to match one of the arrangements shown in Table 16.2.4.1(a) for the rated capacity of the pump, and the required intakes shall be at least equal in size to the size of the suction lines for that arrangement.

16.6.1.1 The intakes specified in 16.6.1 shall have male National Hose threads if the apparatus is to be used in the United States.

16.6.1.2 If the couplings on the suction hose carried on the apparatus are of a different size than the pump intake(s) or have means of hose attachment other than that provided on the intake(s), an adapter(s) shall be provided to allow connection of the suction hose to the pump intake(s).

16.6.1.3* A sign shall be provided on the pump operator's panel that states the following:

> **WARNING:** Death or serious injury might occur if proper operating procedures are not followed. The pump operator as well as individuals connecting supply or discharge hoses to the apparatus must be familiar with water hydraulics hazards and component limitations.

16.6.2 Intake Strainer.

16.6.2.1 Each intake shall have a removable or accessible strainer inside the connection.

16.6.2.2* The strainer(s) shall restrict spherical debris that is too large to pass through the pump.

16.6.3 At least one valved intake shall be provided that can be controlled from the pump operator's position.

16.6.3.1 The valve and piping shall be a minimum 2½ in. (65 mm) nominal size.

16.6.3.2 If the intake is 2½ in. (65 mm) nominal size, the intake shall be equipped with a female swivel coupling with National Hose threads.

16.6.4 Any 3 in. (75 m) or larger intake valve except the tank-to-pump intake valve shall be a slow-operating valve.

16.6.5* Each valved intake shall be equipped with a bleeder valve having a minimum ¾ in. (19 mm) pipe thread connection to bleed off air or water.

16.6.5.1 The bleeder valve shall be operational without the operator having to get under the apparatus.

16.6.5.2 If a valved appliance is attached to an intake, it shall be equipped with a ¾ in. (19 mm) bleeder valve on each intake.

16.6.6 Each valved intake having a connection size of 3½ in. (90 mm) or larger shall be equipped with an adjustable automatic pressure relief device installed on the supply side of the valve to bleed off pressure from a hose connected to the valved intake.

16.6.6.1 The pressure relief device shall discharge to atmosphere, and the discharge shall be piped or directed away from the pump operator's position.

16.6.6.2 The automatic pressure relief device shall be adjustable from a minimum of 90 psi (620 kPa) to at least 185 psi (1275 kPa).

16.6.6.3 The pressure relief device, when preset at 125 psi (860 kPa), shall not allow a pressure rise greater than 60 psi (400 kPa) at the device inlet while flowing a minimum of 150 gpm (570 L/min).

16.6.7 If the pump is equipped with one or more intakes larger than 3½ in. (89 mm) that are not valved, an adjustable automatic pressure relief device shall be installed on the pump system to bleed off excess pressure from a hose connected to the pump intake.

16.6.7.1 The automatic pressure relief device shall be adjustable from a minimum of 90 psi (620 kPa) to at least 185 psi (1275 kPa).

16.6.7.2 The pressure relief device, when preset at 125 psi (860 kPa), shall not allow a pressure rise greater than 60 psi (400 kPa) at the device inlet while flowing a minimum of 150 gpm (570 L/min).

16.6.7.3 The pressure relief device shall discharge to atmosphere.

16.6.8 All intakes shall be provided with caps or closures capable of withstanding a hydrostatic burst gauge pressure of 500 psi (3400 kPa).

16.6.8.1 Intakes having male threads shall be equipped with caps; intakes having female threads shall be equipped with plugs.

16.6.8.2 Where adapters for special threads or other means for hose attachment are provided on the intakes, closures shall be provided for the adapters in lieu of caps or plugs.

16.6.9 Caps or closures for 3½ in. (90 mm) and smaller intakes shall be removable from the intakes but remain secured to the apparatus.

Copyright National Fire Protection Association
Provided by IHS under license with NFPA
No reproduction or networking permitted without license from IHS
Not for Resale

16.6.10 If the suction inlets are to be equipped with a valve, siamese, or adapter that will remain in place while the apparatus is in motion, that valve, siamese, or adapter shall not project beyond the apparatus running board.

16.6.11 The purchaser shall specify if any valve, siamese, or adapter is to be permanently installed on an intake and identify the brand and model of such item.

16.7* Pump Discharge Outlets.

16.7.1* Discharge outlets of 2½ in. (65 mm) or larger shall be provided to discharge the rated capacity of the pump at the flow rates shown in Table 16.7.1.

Table 16.7.1 Discharge Rates by Outlet Size

Outlet Size		Flow Rates	
in.	mm	gpm	L/min
2½	65	250	1000
3	75	375	1400
3½	90	500	2000
4	100	625	2400
4½	110	750	3000
5	125	1000	4000
6	150	1440	5500

16.7.1.1 If the apparatus is equipped with an aerial device with a waterway that is permanently connected to the pump, the discharge from that waterway shall be permitted to be credited as a 1000 gpm (4000 L/min) outlet.

16.7.1.2 A minimum of two 2½ in. (65 mm) outlets shall be provided on any pump rated at 750 gpm (3000 L/min) or greater, and a minimum of one 2½ in. (65 mm) outlet shall be provided on any pump rated at less than 750 gpm (3000 L/min).

16.7.2 Discharge Outlet Connections.

16.7.2.1 All 2½ in. (65 mm) or larger discharge outlets shall be equipped with male National Hose threads.

16.7.2.2* Adapter couplings with special threads or other means for hose attachment shall be permitted to be furnished on any or all outlets.

16.7.3* The piping and valves supplying any preconnected 1½ in. (38 mm), 1¾ in. (45 mm), or 2 in. (52 mm) hose line, including the piping to the preconnected hose storage areas specified in Section 5.6(2), Section 6.5(2), 7.5.2, 8.6.2, Section 9.6(2), or Section 11.7(2), as applicable, shall be at least 2 in. (52 mm) in size.

16.7.4 All discharge outlets, except outlets to which a hose will be preconnected, shall be equipped with caps or closures capable of withstanding a minimum hydrostatic burst gauge pressure of 100 psi (700 kPa) over the maximum pump close-off pressure or 500 psi (3400 kPa), whichever is greater.

16.7.4.1 Where adapters are provided on the discharge outlets, the closures shall fit on the adapters.

16.7.4.2 Caps or closures for outlets 3½ in. (90 mm) and smaller in size shall be removable from the outlet but remain secured to the apparatus.

16.7.5 Each discharge outlet shall be equipped with a valve that can be opened and closed smoothly at the flows shown in Table 16.7.1 at pump discharge gauge pressures of 250 psi (1700 kPa).

16.7.5.1 The flow-regulating element of each valve shall not change its position under any condition of operation that involves discharge pressures to the maximum pressure of the pump; the means to prevent a change in position shall be incorporated in the operating mechanism and shall be permitted to be manually or automatically controlled.

16.7.5.2* Any 3 in. (75 mm) or larger discharge valve shall be a slow-operating valve.

16.7.6 All 1½ in. (38 mm) or larger discharge outlets shall be equipped with a drain or bleeder valve having a minimum ¾ in. (19 mm) pipe thread connection for draining or bleeding off pressure from a hose connected to the outlet.

16.7.7 Any 2 in. (52 mm) or larger discharge outlet that is located more than 42 in. (1070 mm) off the ground to which hose is to be connected and that is not in a hose storage area shall be supplied with a sweep elbow of at least 30 degrees downward.

16.7.8 Valves.

16.7.8.1 Each pump discharge shall have a valve that can be controlled from the pump operator's position.

16.7.8.2 A secondary valve shall be permitted to be provided at a discharge outlet if required for special applications.

16.7.9* Location of Discharge Outlets.

16.7.9.1 No discharge outlet larger than 2½ in. (65 mm) shall be located at the pump operator's panel.

16.7.9.2 If the apparatus has a top console–type pump operator's panel, vertical discharge outlets larger than 2½ in. (65 mm) shall be permitted at the top midship position of apparatus where the outlets are used for directly connected deck guns or monitors and no fire hose is used for coupling the components.

16.7.10 Where the valve-operating mechanism does not indicate the position of the valve, an indicator shall be provided to show when the valve is closed.

16.8 Pump Drains.

16.8.1 A readily accessible drain valve(s) that is marked with a label as to its function shall be provided to allow for draining of the pump and all water-carrying lines and accessories.

16.8.2 The drain valve(s) shall be operational without the operator having to get under the apparatus.

16.9 Pump Operator's Panel.

16.9.1* Each pump control, gauge, and other instrument necessary to operate the pump shall be located on a panel known as the pump operator's panel and shall be marked with a label as to its function.

16.9.2 All gauges, discharge outlets, pump intakes, and controls shall be illuminated to a minimum lighting level of 5 fc (50 lx).

16.10* Pump Controls.

16.10.1 General Provisions. Provisions shall be made for placing the pump drive system in operation using controls and switches that are identified and within convenient reach of the operator.

Copyright National Fire Protection Association
Provided by IHS under license with NFPA
No reproduction or networking permitted without license from IHS
Not for Resale

16.10.1.1 Where the pump is driven by the chassis engine and engine compression brakes or engine exhaust brakes are furnished, these engine brakes shall be automatically disengaged for pumping operations.

16.10.1.2* Any control device used in the pumping system power train between the engine and the pump, except a manual pump shift override device if provided, shall be equipped with a means to prevent unintentional movement of the control device from its set position in the pumping mode.

16.10.1.3 A label indicating the chassis transmission shift selector position to be used for pumping shall be provided in the driving compartment and located so that it can be read from the driver's position.

16.10.1.4 Where the pump is driven by the chassis engine and transmission through a split shaft PTO, the driving compartment speedometer shall register when the pump drive system is engaged.

16.10.1.5 Where chassis transmission retarders are furnished, they shall be automatically disengaged for pumping operations.

16.10.2 Stationary Pump Driven Through Split-Shaft PTO — Automatic Chassis Transmission. Where the apparatus is equipped with an automatic chassis transmission, the water pump is driven by the chassis engine through the transmission's main driveline, and the apparatus is to be used for stationary pumping only, an interlock system shall be provided to ensure that the pump drive system components are engaged in the pumping mode of operation so that the pumping system can be operated from the pump operator's position.

16.10.2.1* A "Pump Engaged" indicator shall be provided in the driving compartment to indicate that the pump shift process has been successfully completed.

16.10.2.2 An "OK to Pump" indicator shall be provided in the driving compartment to indicate that the pump is engaged, the chassis transmission is in pump gear, and the parking brake is engaged.

16.10.2.3 A "Throttle Ready" indicator shall be provided at the pump operator's panel to indicate that the apparatus is in "OK to Pump" mode or that the chassis transmission is in neutral and the parking brake is engaged.

16.10.3 Stationary Pump Driven Through Split-Shaft PTO — Manual Chassis Transmission. Where the apparatus is equipped with a manual chassis transmission, the water pump is driven by the chassis engine through the transmission's main driveline, and the apparatus is to be used for stationary pumping only, an interlock system shall be provided to ensure that the pump drive system components are engaged in the pumping mode of operation so that the pumping system can be operated from the pump operator's position.

16.10.3.1* A "Pump Engaged" indicator shall be provided in the driving compartment to indicate that the pump shift has been successfully completed.

16.10.3.2 An "OK to Pump" indicator shall be provided in the driving compartment to indicate that the pump is engaged and the parking brake is engaged.

16.10.3.3 A "Throttle Ready" indicator shall be provided at the pump operator's panel to indicate that the apparatus is in "OK to Pump" mode or that the parking brake is engaged.

16.10.4 Stationary Pump Driven Through Transmission-Mounted PTO, Front-of-Engine Crankshaft PTO, or Engine Flywheel PTO — Automatic Chassis Transmission. Where the apparatus is equipped with an automatic chassis transmission, the water pump is driven by a transmission-mounted (SAE) PTO, front-of-engine crankshaft PTO, or engine flywheel PTO, and the apparatus is to be used for stationary pumping only with the chassis transmission in neutral, an interlock system shall be provided to ensure that the pump drive system components are engaged in the pumping mode of operation so that the pump system can be operated from the pump operator's position.

16.10.4.1 A "Pump Engaged" indicator shall be provided both in the driving compartment and on the pump operator's panel to indicate that the pump shift has been successfully completed.

16.10.4.2 An "OK to Pump" indicator shall be provided in the driving compartment to indicate that the pump is engaged, the chassis transmission is in neutral, and the parking brake is engaged.

16.10.4.3 A "Throttle Ready" indicator shall be provided at the pump operator's panel to indicate that the apparatus is in "OK to Pump" mode or that the chassis transmission is in neutral and the parking brake is engaged.

16.10.5 Stationary Pump Driven Through Transmission-Mounted PTO, Front-of-Engine Crankshaft PTO, or Engine Flywheel PTO — Manual Chassis Transmissions. Where the apparatus is equipped with a manual chassis transmission, the water pump is driven by a transmission-mounted (SAE) PTO, front-of-engine crankshaft PTO, or engine flywheel PTO, and the apparatus is to be used for stationary pumping only with the chassis transmission in neutral, an interlock system shall be provided to ensure that the pump drive system components are engaged in the pumping mode of operation so that the pump system can be operated from the pump operator's position.

16.10.5.1 A "Pump Engaged" indicator shall be provided both in the driving compartment and on the pump operator's panel to indicate that the pump shift has been successfully completed.

16.10.5.2 An "OK to Pump" indicator shall be provided in the driving compartment to indicate that the pump is engaged and the parking brake is engaged.

16.10.5.3 A "Throttle Ready" indicator shall be provided at the pump operator's panel to indicate that the apparatus is in "OK to Pump" mode or that the parking brake is engaged.

16.10.6 Stationary and "Pump-and-Roll" Pump —– Automatic Chassis Transmissions. Where the water pump is driven by a transmission-mounted (SAE) PTO, front-of-engine crankshaft PTO, or engine flywheel PTO, and the apparatus is designed to be used in both the stationary pumping mode and the pump-and-roll pumping mode with the automatic chassis transmission in neutral for stationary pumping and in a road gear for pump-and-roll pumping, an interlock system shall be provided to ensure that the pump drive system components are properly engaged in the pumping mode of operation so that the apparatus can be operated in either stationary or pump-and-roll pumping mode.

16.10.6.1 A "Pump Engaged" indicator shall be provided both in the driving compartment and at the pump operator's panel to indicate that the pump shift has been successfully completed.

16.10.6.2 Indicators.

16.10.6.2.1 An "OK to Pump" indicator shall be provided in the driving compartment to indicate that the pump is engaged, the chassis transmission is in neutral, and the parking brake is engaged.

Copyright National Fire Protection Association
Provided by IHS under license with NFPA
No reproduction or networking permitted without license from IHS
Not for Resale

16.10.6.2.2 An "OK to Pump and Roll" indicator shall be provided in the driving compartment and shall be energized when the pump is engaged, the chassis transmission is in road gear, and the parking brake is released.

16.10.6.2.3 When the "OK to Pump and Roll" indicator is energized, the "OK to Pump" indicator shall not be energized.

16.10.6.3 A "Throttle Ready" indicator shall be provided at the pump operator's panel that is energized when the "OK to Pump" indicator is energized or when the chassis transmission is in neutral and the parking brake is engaged.

16.10.7 Stationary and "Pump-and-Roll" Pumps — Manual Chassis Transmissions. Where the water pump is driven by a transmission-mounted (SAE) PTO, front-of-engine crankshaft PTO, or engine flywheel PTO, and the apparatus is designed to be used in both the stationary pumping mode and the pump-and-roll pumping mode with the chassis transmission in neutral for stationary pumping or in a road gear for pump-and-roll pumping, an interlock system shall be provided to ensure that the pump drive system components are properly engaged in the pumping mode of operation so that the apparatus can be operated in either stationary or pump-and-roll pumping mode.

16.10.7.1 A "Pump Engaged" indicator shall be provided both in the driving compartment and at the pump operator's panel to indicate that the pump shift has been successfully completed.

16.10.7.2 An "OK to Pump" indicator shall be provided in the driving compartment to indicate that the pump is engaged and the parking brake is engaged.

16.10.7.3 An "OK to Pump and Roll" indicator shall be provided in the driving compartment and shall be energized when the pump is engaged and the parking brake is released.

16.10.7.4 When the "OK to Pump and Roll" indicator is energized, the "OK to Pump" indicator shall not be energized.

16.10.7.5 A "Throttle Ready" indicator shall be provided at the pump operator's panel that is energized when the "OK to Pump" indicator is energized or when the parking brake is engaged.

16.10.8 Stationary Pumps Driven Through Transfer Case PTOs — Automatic Chassis Transmissions. Where the apparatus is equipped with an automatic chassis transmission, the water pump is driven by the chassis engine through the transmission's main driveline and through a transfer case, and the apparatus is to be used for stationary pumping only, an interlock system shall be provided to ensure that the pump drive system components are engaged in the pumping mode of operation so that the pumping system can be operated from the pump operator's position.

16.10.8.1 A "Pump Engaged" indicator shall be provided in the driving compartment to indicate that the pump shift has been successfully completed.

16.10.8.2 An "OK to Pump" indicator shall be provided in the driving compartment to indicate that the pump is engaged, the chassis transmission is in pump gear, the transfer case drive to the chassis wheels is in neutral, and the parking brake is engaged.

16.10.8.3 A "Throttle Ready" indicator shall be provided at the pump operator's panel to indicate that the apparatus is in "OK to Pump" mode or that the chassis transmission is in neutral and the parking brake is engaged.

16.10.9 Stationary Pumps Driven Through Transfer Case PTOs – Manual Chassis Transmissions. Where the apparatus is equipped with a manual chassis transmission, the water pump is driven by the chassis engine through the transmission's main driveline and through a transfer case, and the apparatus is to be used for stationary pumping only, an interlock system shall be provided to ensure that the pump drive system components are engaged in the pumping mode of operation so that the pumping system can be operated from the pump operator's position.

16.10.9.1 A "Pump Engaged" indicator shall be provided in the driving compartment to indicate that the pump shift has been successfully completed.

16.10.9.2 An "OK to Pump" indicator shall be provided in the driving compartment to indicate that the pump is engaged, the transfer case drive to the chassis wheels is in neutral, and the parking brake is engaged.

16.10.9.3 A "Throttle Ready" indicator shall be provided at the pump operator's panel to indicate that the apparatus is in "OK to Pump" mode or that the parking brake is engaged.

16.10.10 Pump Operator's Panel Engine Speed Advancement — Automatic Chassis Transmission. An interlock system shall be provided to prevent advancement of the engine speed at the pump operator's panel unless the chassis transmission is in neutral and the parking brake is engaged or the apparatus is in the "OK to Pump" mode.

16.10.11 Pump Operator's Panel Engine Speed Advancement — Manual Chassis Transmission. An interlock system shall be provided to prevent advancement of the engine speed at the pump operator's panel unless the parking brake is engaged or the apparatus is in the "OK to Pump" mode.

16.10.12 Parallel/Series Control.

16.10.12.1 With parallel/series centrifugal pumps, the control positions for parallel operation (volume) and series operation (pressure) shall be indicated.

16.10.12.2 The control for changing the pump from series to parallel, and vice versa, shall be operable at the pump operator's position.

16.10.13* Pressure Control System.

16.10.13.1* A system shall be provided that, when set in accordance with the manufacturer's instructions, will automatically control the discharge pressure to a maximum of 30 psi (200 kPa) pressure rise above the set pressure(s) when all discharge valves are closed not more rapidly than in 3 seconds and not more slowly than in 10 seconds during the following conditions:

(1) Over a range of pressures from 70 psi to 300 psi (500 kPa to 2000 kPa) net pump pressure with intake gauge pressure between –10 psi and 185 psi (–70 kPa and 1300 kPa) and discharge gauge pressure between 90 psi and 300 psi (620 kPa and 2000 kPa)
(2) With initial engine and pump controls set to produce a range of flows from 150 gpm (550 L/min) to the rated capacity of the pump

16.10.13.2 If the pump is equipped with a relief valve system where the system does not control engine speed, the system shall be equipped with a means to indicate when the system is in control of the pressure.

Copyright National Fire Protection Association
Provided by IHS under license with NFPA
No reproduction or networking permitted without license from IHS
Not for Resale

16.10.13.2.1 If the pump is equipped with a governor system that controls engine speed, an indicator shall show when the system is turned on and whether it is controlling the engine speed or pump pressure.

16.10.13.2.2 Either system shall be controllable by one person at the pump operator position.

16.10.13.3 If the system discharges water to the atmosphere, the discharge shall be in a manner that will not expose personnel to high pressure water streams.

16.10.14* Priming Device. A priming device shall be provided and controlled from the pump operator's position.

16.10.14.1 The priming device shall be capable of meeting the requirements of 16.2.3.2 and 16.2.3.3.

16.10.14.2 The priming device shall be capable of operating with no lubricant or with a biodegradable nontoxic lubricant.

16.10.15 Protection of Pump Controls. All pump controls and devices shall be installed so as to be protected against mechanical damage and the effects of adverse weather conditions on their operation.

16.11 Pump Engine Controls.

16.11.1* A throttle control that holds its set position shall be provided to control the pump engine speed.

16.11.2 The throttle control shall be located not higher than 72 in. (1800 mm) nor lower than 42 in. (1070 mm) from the operator's standing position with all instruments in full view.

16.12 Instrumentation.

16.12.1 Pump Operator's Panel.

16.12.1.1* The following controls and instruments shall be provided and installed as a group at the pump operator's panel:

(1) A master pump intake pressure–indicating device
(2) A master pump discharge pressure–indicating device
(3) A pumping engine tachometer
(4) A pumping engine coolant temperature indicator
(5) A pumping engine oil pressure indicator
(6) A voltmeter
(7) The pump pressure control(s)
(8) The pumping engine throttle
(9) The primer control
(10) The water tank–to–pump valve control
(11) The water tank fill valve control
(12) The water tank level indicator

16.12.1.2 The instruments and controls required by 16.12.1.1 shall be placed so as to keep the pump operator as far as practicable from all discharge and intake connections and in a location where the instruments and controls are visible and operationally functional while the operator remains stationary.

16.12.1.3 Any instrumentation exposed to the elements shall be weatherproof.

16.12.1.4 The pumping engine oil pressure and engine coolant temperature indicators shall be equipped with audible and visual warnings.

16.12.1.5 All engine operation indicators on the pump operator's panel shall be in addition to those on the vehicle's instrument panel.

16.12.2 Master Pump Intake and Discharge Pressure–Indicating Devices.

16.12.2.1 Master pump intake and pump discharge pressure–indicating devices shall be located within 8 in. (200 mm) of each other, edge to edge, with the intake pressure–indicating device to the left of or below the pump discharge pressure–indicating device.

16.12.2.1.1 The intake pressure–indicating device shall read from 30 in. Hg (100 kPa) vacuum to at least a gauge pressure of 300 psi (2000 kPa).

16.12.2.1.2 The discharge pressure–indicating device shall read from a gauge pressure of 0 psi or lower to a gauge pressure of at least 300 psi (2000 kPa).

16.12.2.1.3 Pressure-indicating devices shall not be damaged by a 30 in. Hg (100 kPa) vacuum.

16.12.2.1.4 Pressure-indicating devices shall be marked with labels that read "Pump Intake" for the intake pressure–indicating device and "Pump Discharge" for the discharge pressure–indicating device.

16.12.2.1.5 Where analog gauges are used, there shall be at least a 1 in. (25 mm) diameter differential in viewing area between the master gauges and the individual discharge gauges, with the master gauges being the larger.

16.12.2.1.5.1 The accuracy of gauges shall be a minimum of Grade 1A as defined in ASME B40.100, *Pressure Gauges and Gauge Attachments*.

16.12.2.1.5.2 Numerals for master gauges shall be a minimum of 0.25 in. (6.4 mm) high.

16.12.2.1.5.3 There shall be graduation lines showing at least every 10 psi (70 kPa), with major and intermediate graduation lines emphasized and figures at least every 100 psi (700 kPa).

16.12.2.1.5.4 Analog pressure gauges shall be vibration and pressure pulsation dampened; be resistant to corrosion, condensation, and shock; and have internal mechanisms that are factory lubricated for the life of the gauge.

16.12.2.1.6 If digital master pressure-indicating devices are used, they shall meet the requirements of 16.12.2.1.6.1 through 16.12.2.1.6.3.

16.12.2.1.6.1 The digits shall be at least ½ in. (12.7 mm) high.

16.12.2.1.6.2 Digital pressure-indicating devices shall display pressure in increments of not more than 10 psi (70 kPa).

16.12.2.1.6.3 Digital master pressure-indicating devices shall have an accuracy of ±3 percent over the full scale.

16.12.3 Discharge Outlet Instrumentation.

16.12.3.1 A flowmeter or a pressure-indicating device shall be provided for each discharge outlet 1½ in. (38 mm) or larger in size and shall be marked with a label to indicate the outlet to which it is connected.

16.12.3.2* Any discharge outlet 3½ in. (90 mm) or larger that is equipped with a flowmeter shall also be provided with a pressure-indicating device.

16.12.3.3 The pressure-indicating device or flowmeter display shall be located adjacent to the corresponding valve control with no more than 6 in. (150 mm) separating the pressure-indicating device or flowmeter bezel and the valve control midpoint or centerline.

Copyright National Fire Protection Association
Provided by IHS under license with NFPA
No reproduction or networking permitted without license from IHS
Not for Resale

16.12.3.4 If both a flowmeter and a pressure-indicating device are provided for an individual discharge outlet, the pressure-indicating device shall be located within 6 in. (150 mm) of the valve control midpoint or centerline, and the flowmeter display shall be adjacent to and within 2 in. (52 mm) of the pressure-indicating device bezel.

16.12.3.5 Pressure-indicating devices shall be connected to the outlet side of the valve.

16.12.3.6 Flowmeters shall display flow in increments no greater than 10 gpm (38 L/min).

16.12.3.7 Where analog pressure gauges are used, they shall have a minimum accuracy of Grade B as defined in ASME B40.100, *Pressure Gauges and Gauge Attachments*.

16.12.3.7.1 Numerals for gauges shall be a minimum 5⁄32 in. (4 mm) high.

16.12.3.7.2 There shall be graduation lines showing at least every 10 psi (70 kPa), with major and intermediate graduation lines emphasized and figures at least every 100 psi (700 kPa).

16.12.3.7.3 Analog pressure gauges shall be vibration and pressure pulsation dampened; be resistant to corrosion, condensation, and shock; and have internal mechanisms that are factory lubricated for the life of the gauge.

16.12.3.8 If digital pressure-indicating devices are used, they shall meet the requirements of 16.12.3.8.1 through 16.12.3.8.3.

16.12.3.8.1 The digits shall be at least ¼ in. (6.4 mm) high.

16.12.3.8.2 Digital pressure-indicating devices shall display pressure in increments of not more than 10 psi (70 kPa).

16.12.3.8.3 Digital pressure-indicating devices shall have an accuracy of ±3 percent over the full scale.

16.12.3.9 Each flowmeter shall be calibrated to an accuracy of ±5 percent when flowing the amount of water shown in Table 16.12.3.9 for the pipe size in which it is mounted.

Table 16.12.3.9 Flowmeter Calibration Flow for Each Pipe Size

Pipe Size		Flow	
in.	**mm**	**gpm**	**L/min**
1	25	40	150
1½	38	90	340
2	52	160	600
2½	65	250	950
3	75	375	1400
4	100	625	2400
5	125	1000	4000
6	150	1440	5500

16.12.4 Each pressure-indicating device or flowmeter, and its respective display, shall be mounted and attached so it is protected from accidental damage and excessive vibration.

16.12.5 Connections for test gauges shall be provided at the pump operator's panel.

16.12.5.1 One test gauge connection shall be connected to the intake side of the pump, and the other shall be connected to the discharge manifold of the pump.

16.12.5.2 The test gauge connections shall have a 0.25 in. (6.4 mm) standard pipe thread, shall be plugged, and shall be marked with a label.

16.13 Required Testing.

16.13.1 Pump Certification.

16.13.1.1 If the fire pump has a rated capacity of 750 gpm (3000 L/min) or greater, the pump shall be tested after the pump and all its associated piping and equipment have been installed on the apparatus.

16.13.1.1.1 The tests shall include at least the pumping test *(see 16.13.2)*, the pumping engine overload test *(see 16.13.3)*, the pressure control system test *(see 16.13.4)*, the priming device tests *(see 16.13.5)*, and the vacuum test *(see 16.13.6)*.

16.13.1.1.2 If the apparatus is equipped with a water tank, the water tank–to–pump flow test *(see 16.13.7)* shall be included.

16.13.1.1.3 An independent third-party certification organization shall witness the tests and certify the tests results.

16.13.1.2 If the fire pump has a rated capacity of less than 750 gpm (3000 L/min), the pump shall be tested after the pump and all its associated piping and equipment have been installed on the apparatus.

16.13.1.2.1 The tests shall include at least the pumping test *(see 16.13.2)*, the pressure control system test *(see 16.13.4)*, the priming device tests *(see 16.13.5)*, and the vacuum test *(see 16.13.6)*.

16.13.1.2.2 If the apparatus is equipped with a water tank, the water tank–to–pump flow test *(see 16.13.7)* shall be included.

16.13.1.2.3* The tests results shall be certified by the apparatus manufacturer.

16.13.1.3 Test Plate.

16.13.1.3.1 A test plate shall be provided at the pump operator's panel that gives the rated discharges and pressures together with the speed of the engine as determined by the certification test for each unit, the position of the parallel/series pump as used, and the governed speed of the engine as stated by the engine manufacturer on a certified brake horsepower curve.

16.13.1.3.2 The plate shall be completely stamped with all information at the factory and attached to the vehicle prior to shipping.

16.13.2 Pumping Test.

16.13.2.1 Conditions for Test.

16.13.2.1.1 The test site shall be adjacent to a supply of clear water at least 4 ft (1.2 m) deep, with the water level not more than 10 ft (3 m) below the center of the pump intake, and close enough to allow the suction strainer to be submerged at least 2 ft (0.6 m) below the surface of the water when connected to the pump by 20 ft (6 m) of suction hose.

16.13.2.1.2* Tests shall be performed when conditions are as follows:

(1) Air temperature: 0°F to 110°F (–18°C to 43°C)
(2) Water temperature: 35°F to 90°F (2°C to 32°C)
(3) Barometric pressure: 29 in. Hg (98.2 kPa), minimum (corrected to sea level)

16.13.2.1.3 Engine-driven accessories shall not be functionally disconnected or otherwise rendered inoperative during the tests.

Copyright National Fire Protection Association
Provided by IHS under license with NFPA
No reproduction or networking permitted without license from IHS
Not for Resale

16.13.2.1.3.1 If the chassis engine drives the pump, the total continuous electrical loads excluding those loads associated with the equipment defined in 16.13.2.1.3.3 shall be applied for the entire pumping portion of this test.

16.13.2.1.3.2 If the vehicle is equipped with a fixed power source driven by the same engine that drives the fire pump, it shall be running at a minimum of 50 percent of its rated capacity throughout the pumping portion of the pump test.

16.13.2.1.3.3 The following devices shall be permitted to be turned off or not operating during the pump test:

(1) Aerial hydraulic pump
(2) Foam pump
(3) Hydraulically driven equipment (other than hydraulically driven line voltage generator)
(4) Winch
(5) Windshield wipers
(6) Four-way hazard flashers
(7) Compressed air foam system (CAFS) compressor

16.13.2.1.4 All structural enclosures, such as floorboards, gratings, grilles, and heat shields, not furnished with a means for opening them in service shall be kept in place during the tests.

16.13.2.2 Equipment.

16.13.2.2.1 Suction Hose.

16.13.2.2.1.1 The suction hose shall be of the appropriate size for the rated capacity of the pump *[see Table 16.2.4.1(a)]*.

16.13.2.2.1.2 A suction strainer and hose that will allow flow with total friction and entrance loss not greater than that specified in Table 16.2.4.1(b) or Table 16.2.4.1(c) shall be used.

16.13.2.2.2 Sufficient fire hose shall be provided to discharge the rated capacity of the pump to the nozzles or other flow measuring equipment without exceeding a flow velocity of 35 ft/sec (10 m/sec) [approximately 500 gpm (2000 L/min) for 2½ in. (65 mm) hose].

16.13.2.2.3 Where nozzles are used, they shall be smoothbore, and the inside diameters shall be from ¾ in. to 2½ in. (19 mm to 63.5 mm).

16.13.2.2.4 Test Gauges.

16.13.2.2.4.1 All test gauges shall meet the requirements for Grade A gauges as defined in ASME B40.100, *Pressure Gauges and Gauge Attachments*, and shall be at least size 3½ per ASME B40.100.

16.13.2.2.4.2 A mercury manometer shall be permitted to be used in lieu of a pump intake gauge.

16.13.2.2.4.3 The pump intake gauge shall have a range of 30 in. Hg (100 kPa) vacuum to zero for a vacuum gauge, or 30 in. Hg (100 kPa) vacuum to a gauge pressure of 150 psi (1000 kPa) for a compound gauge.

16.13.2.2.4.4 The discharge pressure gauge shall have a gauge pressure range of 0 psi to 400 psi (0 kPa to 2800 kPa).

16.13.2.2.4.5 Pilot gauges shall have a gauge pressure range of at least 0 psi to 160 psi (0 kPa to 1100 kPa).

16.13.2.2.4.6 All gauges shall be calibrated in the month preceding the tests using a dead-weight gauge tester or a master gauge meeting the requirements for Grade 3A or 4A gauges, as defined in ASME B40.100, *Pressure Gauges and Gauge Attachments*, that has been calibrated within the preceding year.

16.13.2.2.5 Each test gauge connection shall include a means for "snubbing," such as a needle valve to damp out rapid needle movements.

16.13.2.2.6* The engine speed–measuring equipment shall consist of a nonadjustable tachometer supplied from the engine or transmission electronics, a revolution counter on a checking shaft outlet and a stop watch, or other engine speed–measuring means that is accurate to within ± 50 rpm of actual speed.

16.13.2.3 Procedure.

16.13.2.3.1* The ambient air temperature, water temperature, vertical lift, elevation of test site, and atmospheric pressure (corrected to sea level) shall be determined and recorded prior to and after each pump test.

16.13.2.3.2* The engine, pump, transmission, and all parts of the apparatus shall exhibit no undue heating, loss of power, or other defect during the entire test.

16.13.2.3.3 If the apparatus is equipped with a fire pump rated at 750 gpm (3000 L/min) or greater, the pump shall be subjected to a 3 hour pumping test from draft consisting of 2 hours of continuous pumping at rated capacity at 150 psi (1000 kPa) net pump pressure, followed by ½ hour of continuous pumping at 70 percent of rated capacity at 200 psi (1400 kPa) net pump pressure and ½ hour of continuous pumping at 50 percent of rated capacity at 250 psi (1700 kPa) net pump pressure.

16.13.2.3.3.1 The pump shall not be stopped until after the 2 hour test at rated capacity, unless it becomes necessary to clean the suction strainer.

16.13.2.3.3.2 The pump shall be permitted to be stopped between tests in order to change the hose or nozzles, clean the strainer, or add fuel for the pump drive engine.

16.13.2.3.3.3 The capacity, discharge pressure, intake pressure, and engine speed shall be recorded at least every 15 minutes but not fewer than three times for each test sequence.

16.13.2.3.3.4 The average net pump pressure shall be calculated and recorded based on the average values for discharge and intake pressure.

16.13.2.3.4 If the apparatus is equipped with a fire pump rated at less than 750 gpm (3000 L/min), the pump shall be subjected to a 50 minute pumping test from draft consisting of ½ hour of continuous pumping at rated capacity at 150 psi (1000 kPa) net pump pressure, followed by 10 minutes of continuous pumping at 70 percent of rated capacity at 200 psi (1400 kPa) net pump pressure, and 10 minutes of continuous pumping at 50 percent of rated capacity at 250 psi (1700 kPa) net pump pressure.

16.13.2.3.4.1 The pump shall not be stopped until after the ½ hour test at rated capacity, unless it becomes necessary to clean the suction strainer.

16.13.2.3.4.2 The pump shall be permitted to be stopped between tests in order to change the hose or nozzles or clean the strainer.

16.13.2.3.4.3 The capacity, discharge pressure, intake pressure, and engine speed shall be recorded at least every 10 minutes but not fewer than three times for each test sequence.

16.13.2.3.4.4 The average net pump pressure shall be calculated and recorded based on the average values for discharge and intake pressure.

Copyright National Fire Protection Association
Provided by IHS under license with NFPA
No reproduction or networking permitted without license from IHS
Not for Resale

16.13.3 Pumping Engine Overload Test. If the pump has a rated capacity of 750 gpm (3000 L/min) or greater, the apparatus shall be subjected to an overload test consisting of pumping rated capacity at 165 psi (1100 kPa) net pump pressure for at least 10 minutes.

16.13.3.1 This test shall be performed immediately following the pumping test of rated capacity at 150 psi (1000 kPa).

16.13.3.2 The capacity, discharge pressure, intake pressure, and engine speed shall be recorded at least three times during the overload test.

16.13.4 Pressure Control System Test. The pressure control system on the pump shall be tested as follows:

(1) The pump shall be operated at draft, delivering rated capacity at a discharge gauge pressure of 150 psi (1000 kPa).
(2) The pressure control system shall be set in accordance with the manufacturer's instructions to maintain the discharge gauge pressure at 150 psi (1000 kPa) ±5 percent.
(3) All discharge valves shall be closed not more rapidly than in 3 seconds and not more slowly than in 10 seconds.
(4) The rise in discharge pressure shall not exceed 30 psi (200 kPa) and shall be recorded.
(5) The original conditions of pumping rated capacity at a discharge gauge pressure of 150 psi (1000 kPa) shall be reestablished.
(6) The discharge pressure gauge shall be reduced to 90 psi (620 kPa) by throttling the engine fuel supply, with no change to the discharge valve settings, hose, or nozzles.
(7) The pressure control system shall be set according to the manufacturer's instructions to maintain the discharge gauge pressure at 90 psi (620 kPa) ±5 percent.
(8) All discharge valves shall be closed not more rapidly than in 3 seconds and not more slowly than in 10 seconds.
(9) The rise in discharge pressure shall not exceed 30 psi (200 kPa) and shall be recorded.
(10) The pump shall be operated at draft, pumping 50 percent of rated capacity at a discharge gauge pressure of 250 psi (1700 kPa).
(11) The pressure control system shall be set in accordance with the manufacturer's instructions to maintain the discharge gauge pressure at 250 psi (1700 kPa) ±5 percent.
(12) All discharge valves shall be closed not more rapidly than in 3 seconds and not more slowly than in 10 seconds.
(13) The rise in discharge pressure shall not exceed 30 psi (200 kPa) and shall be recorded.

16.13.5 Priming Device Tests. With the apparatus set up for the pumping test, the primer shall be operated in accordance with the manufacturer's instructions until the pump has been primed and is discharging water.

16.13.5.1 This test shall be permitted to be performed in connection with priming the pump for the pumping test.

16.13.5.2 The interval from the time the primer is started until the time the pump is discharging water shall be noted.

16.13.5.3 The time required to prime the pump shall not exceed 30 seconds if the rated capacity is 1250 gpm (5000 L/min) or less.

16.13.5.4 The time required to prime the pump shall not exceed 45 seconds if the rated capacity is 1500 gpm (6000 L/min) or more.

16.13.5.5 An additional 15 seconds shall be permitted in order to meet the requirements of 16.13.5.3 and 16.13.5.4 when the pump system includes an auxiliary 4 in. (100 mm) or larger intake pipe having a volume of 1 ft^3 (0.03 m^3) or more.

16.13.6 Vacuum Test. The vacuum test shall consist of subjecting the interior of the pump, with all intake valves open, all intakes capped or plugged, and all discharge caps removed, to a vacuum of 22 in. Hg (75 kPa) by means of the pump priming device.

16.13.6.1 At altitudes above 2000 ft (600 m), the vacuum attained shall be permitted to be less than 22 in. Hg (75 kPa) by 1 in. Hg (3.4 kPa) for each 1000 ft (305 m) of altitude above 2000 ft (600 m).

16.13.6.2 The vacuum shall not drop more than 10 in. Hg (34 kPa) in 5 minutes.

16.13.6.3 The primer shall not be used after the 5 minute test period has begun.

16.13.6.4 The engine shall not be operated at any speed greater than the governed speed during this test.

16.13.7 Water Tank–to–Pump Flow Test.

16.13.7.1 A water tank–to–pump flow test shall be conducted as follows:

(1) The water tank shall be filled until it overflows.
(2) All intakes to the pump shall be closed.
(3) The tank fill line and bypass cooling line shall be closed.
(4) Hose lines and nozzles for discharging water at the rated tank-to-pump flow rate shall be connected to one or more discharge outlets.
(5) The tank-to-pump valve(s) and the discharge valves leading to the hose lines and nozzles shall be fully opened.
(6) The engine throttle shall be adjusted until the required flow rate –0/+5 percent is established *(see 19.3.2)*.
(7) The discharge pressure shall be recorded.
(8) The discharge valves shall be closed and the water tank refilled.
(9) The bypass line shall be permitted to be opened temporarily, if needed, to keep the water temperature in the pump within acceptable limits.
(10) The discharge valves shall be reopened fully and the time noted.
(11) If necessary, the engine throttle shall be adjusted to maintain the discharge pressure recorded as noted in 16.13.7.1(7).
(12) When the discharge pressure drops by 10 psi (70 kPa) or more, the time shall be noted and the elapsed time from the opening of the discharge valves shall be calculated and recorded.

16.13.7.2 Volume Discharge Calculation.

16.13.7.2.1 The volume discharged shall be calculated by multiplying the rate of discharge in gallons per minute (liters per minute) by the time in minutes elapsed from the opening of the discharge valves until the discharge pressure drops by at least 10 psi (70 kPa).

16.13.7.2.2 Other means shall be permitted to be used to determine the volume of water pumped from the tank such as a totalizing flowmeter, weighing the truck before and after, or refilling the tank using a totalizing flowmeter.

16.13.7.3 The rated tank-to-pump flow rate shall be maintained until 80 percent of the rated capacity of the tank has been discharged.

--`,,```,,,,````-`-`,,`,,`,`,,`---

Copyright National Fire Protection Association
Provided by IHS under license with NFPA
No reproduction or networking permitted without license from IHS
Not for Resale

16.13.8* Manufacturer's Predelivery Test.

16.13.8.1 The manufacturer shall conduct a piping hydrostatic test prior to delivery of the apparatus.

16.13.8.2 The test shall be conducted as follows:

(1) The pump and its connected piping system shall be hydrostatically tested to a gauge pressure of 250 psi (1700 kPa).
(2) The hydrostatic test shall be conducted with the tank fill line valve, the bypass line valve if so equipped, and the tank-to-pump valve closed.
(3) All discharge valves shall be open and the outlets capped.
(4) All intake valves shall be closed, and nonvalved intakes shall be capped.
(5) This pressure shall be maintained for 3 minutes.

Chapter 17 Auxiliary Pumps and Associated Equipment

17.1* Application. If the apparatus is equipped with an auxiliary pump, the provisions of this chapter shall apply.

17.2 Pump Performance.

17.2.1 Auxiliary pumps shall be rated as either high pressure or medium pressure.

17.2.2 The performance of a high pressure auxiliary pump shall be a minimum of 66 gpm (250 L/min) at 600 psi (4000 kPa) discharge pressure for each high pressure hose reel connected to it that can be operated simultaneously with other high pressure hose reels.

17.2.3 Medium Pressure Auxiliary Pumps.

17.2.3.1 The pump shall have one of the following rated capacities: 30 gpm (115 L/min), 60 gpm (230 L/min), 90 gpm (345 L/min), 120 gpm (460 L/min), 250 gpm (1000 L/min), or 350 gpm (1300 L/min).

17.2.3.2 The pump shall be capable of pumping 100 percent of its rated capacity at 150 psi (1000 kPa) discharge pressure, 70 percent of its rated capacity at 200 psi (1400 kPa) discharge pressure, and 50 percent of its rated capacity at 250 psi (1700 kPa) discharge pressure.

17.2.4 The rating for auxiliary pumps shall be based on the pump taking water from the apparatus water tank.

17.3* Power Train Capability.

17.3.1* All components in the power train from the engine to the pump shall be capable of transmitting the continuous duty power required by the pump for at least 50 minutes at the pump's rated capacity and pressure.

17.3.2* When pumping rated capacity and pressure, lubricant temperatures in any power train component shall not exceed the component manufacturer's recommendation for maximum temperature.

17.4 Construction Requirements. The pump, piping, and valves shall be capable of withstanding a minimum hydrostatic burst pressure of 100 psi (700 kPa) above the maximum system operating pressure.

17.5 Pump Intake Connections.

17.5.1* Each pump intake connection shall be sized to permit the full rated performance of the pump and shall be equipped with a valve that can be controlled from the pump operator's position.

17.5.2 Each external intake shall be equipped with National Hose threads, a removable or accessible strainer, and a bleeder valve to bleed off air or water from a hose connected to the intake.

17.5.2.1 Adapter couplings with special threads or other means for hose attachment shall be permitted to be furnished on any or all intakes.

17.5.2.2 All intakes shall be provided with closures capable of withstanding a hydrostatic burst gauge pressure of 500 psi (3400 kPa).

17.5.2.2.1 Intakes having male threads shall be equipped with caps; intakes having female threads shall be equipped with plugs.

17.5.2.2.2 Where adapters for special threads or other means for hose attachment are provided on the intakes, closures shall be provided for the adapters in lieu of caps or plugs.

17.5.2.3 Caps or closures for 3½ in. (90 mm) and smaller intakes shall be removable from the intakes but remain secured to the apparatus.

17.6* Pump Discharge Connections.

17.6.1 Each pump discharge shall be equipped with a valve that can be controlled from the pump operator's position.

17.6.2 Any discharge outlets that are fed by lines from both the auxiliary pump and the main pump shall have check valves in both supply lines.

17.6.3 Discharge Outlet Connections.

17.6.3.1* All discharge outlets shall be equipped with male National Hose threads.

17.6.3.2 Adapter couplings with special threads or other means for hose attachment shall be permitted to be furnished on any or all outlets.

17.6.4 All discharge outlets, except outlets to which a hose will be preconnected, shall be equipped with caps or closures capable of withstanding a minimum hydrostatic burst gauge pressure of 100 psi (700 kPa) over the maximum pump close-off pressure or 500 psi (3400 kPa), whichever is greater.

17.6.4.1 Where adapters are provided on the discharge outlet, the closures shall fit on the adapters.

17.6.4.2 Caps or closures for outlets 3½ in. (90 mm) and smaller in size shall be removable from the outlet but remain secured to the apparatus.

17.6.5 If a water tank fill line is provided, the line shall be connected from the pump discharge manifold directly to the water tank and shall include a valve that can be controlled from the pump operator's position.

17.7 Pump Operator's Panel.

17.7.1 Each pump control, gauge, and other instrument necessary to operate the auxiliary pump shall be located on a panel and shall be marked with a label as to its function.

17.7.2 All gauges, instruments, discharge outlets, pump intakes, and controls located on the auxiliary pump operator's panel shall be illuminated to a minimum lighting level of 5 fc (54 lx).

17.8 Pump Controls.

17.8.1 Provisions shall be made for placing the pump in operation.

Copyright National Fire Protection Association
Provided by IHS under license with NFPA
No reproduction or networking permitted without license from IHS
Not for Resale

17.8.2 The control for the pump engagement mechanism shall be marked with a label to indicate when the pump is properly engaged in pumping position.

17.8.3 Parallel/Series Control.

17.8.3.1 With parallel/series centrifugal pumps, the positions for parallel operation (volume) and series operation (pressure) shall be indicated.

17.8.3.2 The control for changing the pump from series to parallel, and vice versa, shall be located on the pump operator's panel.

17.8.4 If more than one discharge outlet is provided, a relief valve or other pressure control device shall be provided that is capable of limiting the pump discharge pressure.

17.8.5 All pump controls and devices shall be installed so as to be protected against mechanical damage or the effects of adverse weather conditions on their operation.

17.8.6 Drain Valve(s).

17.8.6.1 A readily accessible drain valve(s) that is marked with a label as to its function shall be provided to allow the pump and all water-carrying lines and accessories to be drained.

17.8.6.2 The drain valve(s) shall be operational without the operator having to get under the apparatus.

17.8.7 A bypass line of not less than ¼ in. (6.3 mm) diameter that has a valve that can be controlled from the pump operator's position or an automatic-type control shall be installed from the discharge manifold directly to the water tank or ground.

17.9 Pump Drive Systems.

17.9.1 Where the pump is driven by a transmission-mounted (SAE) PTO, front-of-engine crankshaft PTO, or flywheel PTO, the provisions of 16.10.4 through 16.10.7 shall be applied as applicable.

17.9.2 Where the pump is driven by a chassis transmission-mounted (SAE) PTO and the pump system does not conform to 16.4.2, a visible or audible warning device shall be provided on the pump operator's panel that is actuated if the temperature of the lubricant in the chassis transmission exceeds the transmission manufacturer's recommended maximum temperature.

17.9.3 Indicator Light.

17.9.3.1 Where a separate engine is used to drive the auxiliary pump, an amber indicator light shall be provided in the driving compartment that is energized when the pump engine is running.

17.9.3.2 This light shall be marked with a label that reads "Pump Engine Running."

17.9.4* If a separate pumping engine is provided, it shall meet the requirements of 12.2.1.1, 12.2.1.2, 12.2.1.6, 12.2.2, 12.2.3.1, 12.2.3.2, 12.2.4, 12.2.5, and Sections 13.4 and 13.5.

17.10 Engine Controls.

17.10.1 A throttle control that holds its set position shall be provided to control the engine speed. It shall be located so that it can be manipulated from the pump operator's position with all instrumentation in full view.

17.10.2 This throttle control shall be permitted to be the same throttle control that is used for the main fire pump.

17.11 Gauges and Instruments.

17.11.1 Master Pump Discharge Pressure–Indicating Device. A master discharge pressure–indicating device shall be provided.

17.11.1.1 It shall read from a gauge pressure of 0 to at least 300 psi (2100 kPa) but not less than 100 psi (700 kPa) higher than the maximum pressure that can be developed by the pump when it is operating with zero intake pressure.

17.11.1.2 Where an analog pressure gauge is used, it shall have a minimum accuracy of Grade 1A as defined in ASME B40.100, *Pressure Gauges and Gauge Attachments*.

17.11.1.2.1 Numerals for master gauges shall be a minimum 0.25 in. (6.4 mm) high.

17.11.1.2.2 There shall be graduation lines showing at least every 10 psi (70 kPa), with major and intermediate graduation lines emphasized and figures at least every 100 psi (700 kPa).

17.11.1.2.3 Analog pressure gauges shall be vibration and pressure pulsation dampened; be resistant to corrosion, condensation, and shock; and have internal mechanisms that are factory lubricated for the life of the gauge.

17.11.1.3 If a digital pressure-indicating device is used, the digits shall be at least 0.25 in. (6.4 mm) high.

17.11.1.3.1 Digital pressure-indicating devices shall display pressure in increments of not more than 10 psi (70 kPa).

17.11.1.3.2 Digital master pressure-indicating devices shall have an accuracy of ±3 percent over the full scale.

17.11.2 Discharge Outlet Instrumentation. If the apparatus is equipped with 1½ in. (38 mm) or larger discharge outlets that can be supplied only by the auxiliary pump, these discharge outlets shall be equipped with pressure-indicating devices or flowmeters.

17.11.2.1 The pressure-indicating device or flowmeter display shall be located adjacent to the corresponding valve control with no more than 6 in. (150 mm) separating the pressure-indicating device or flowmeter bezel and the valve control centerline.

17.11.2.2 Pressure-indicating devices shall be connected to the outlet side of the valve.

17.11.2.3 Flowmeters shall display flow in not greater than 10 gpm (38 L/min).

17.11.2.4 Where an analog pressure gauge is used, the gauge shall have a minimum accuracy of Grade B as defined in ASME B40.100, *Pressure Gauges and Gauge Attachments*.

17.11.2.4.1 Numerals for gauges shall be a minimum 5⁄32 in. (4 mm) high.

17.11.2.4.2 There shall be graduation lines showing at least every 10 psi (70 kPa), with major and intermediate graduation lines emphasized and figures at least every 100 psi (700 kPa).

17.11.2.4.3 Analog pressure gauges shall be vibration and pressure pulsation dampened; be resistant to corrosion, condensation, and shock; and have internal mechanisms that are factory lubricated for the life of the gauge.

17.11.2.5 If a digital pressure-indicating device is used, the digits shall be at least 0.25 in. (6.4 mm) high.

17.11.2.5.1 Digital pressure-indicating devices shall display pressure in increments of not more than 10 psi (70 kPa).

17.11.2.5.2 Digital pressure-indicating devices shall have an accuracy of ±3 percent over the full scale.

Copyright National Fire Protection Association
Provided by IHS under license with NFPA
No reproduction or networking permitted without license from IHS
Not for Resale

17.11.3 Protection of Gauges and Instruments. Each pressure-indicating device or flowmeter, and its respective display, shall be mounted and attached so it is protected from accidental damage and excessive vibration.

17.12 Testing. The pump, piping, valves, and caps or plugs shall be hydrostatically tested to 100 psi (700 kPa) above the maximum system operating pressure, and the apparatus manufacturer shall certify the test results in writing.

Chapter 18 Industrial Supply Pumps and Associated Equipment

18.1 Application. If the apparatus is equipped with an industrial supply pump, the provisions of this chapter shall apply.

18.2 Design and Performance Requirements.

18.2.1 Rated Capacity.

18.2.1.1 The industrial supply pump shall be mounted on the apparatus and shall have a minimum rated capacity of 3000 gpm (12,000 L/min) at 100 psi (700 kPa) net pump pressure.

18.2.1.2 Pumps of higher capacity shall be rated at one of the capacities specified in Table 18.2.4.1(a).

18.2.2 A label on the pump panel shall state, "This apparatus is equipped with an industrial supply pump that has a different performance envelope than a fire pump."

18.2.3* Pumping System Capability.

18.2.3.1 The pumping system provided shall be capable of delivering the following:

(1) One hundred percent of rated capacity at 100 psi (700 kPa) net pump pressure
(2) Seventy percent of rated capacity at 150 psi (1000 kPa) net pump pressure
(3) Fifty percent of rated capacity at 200 psi (1400 kPa) net pump pressure

18.2.3.2 Priming Capability.

18.2.3.2.1 When dry, the pump system shall be capable of taking suction through 20 ft (6 m) of suction hose under the conditions specified in Table 18.2.4.1(a) for the rated capacity of the pump, and discharging water in not more than 45 seconds.

18.2.3.2.2 An additional 15 seconds shall be permitted to meet these requirements where the pump system includes an auxiliary 4 in. (100 mm) or larger intake pipe having a volume of 1 ft^3 (0.3 m^3) or more.

18.2.3.3 Vacuum.

18.2.3.3.1 The completed pumping system shall be capable of developing a vacuum of 22 in. Hg (75 kPa) at altitudes up to 2000 ft (600 m) by means of the pump priming device and sustaining the vacuum for at least 5 minutes with a loss not to exceed 10 in. Hg (34 kPa).

18.2.3.3.2 The requirement in 18.2.3.3.1 shall be met with all intake valves open, all intakes capped or plugged, and all discharge caps removed and without the use of the pump primer during the 5 minute period.

18.2.4 Pump Suction Capability.

18.2.4.1* The pump manufacturer shall certify that the industrial supply pump is capable of pumping 100 percent of rated capacity at 100 psi (700 kPa) net pump pressure from draft through 20 ft (6 m) of suction hose with a strainer attached under the following conditions:

(1) An altitude of 2000 ft (600 m) above sea level
(2) Atmospheric pressure of 29.9 in. Hg (101 kPa) (corrected to sea level)
(3) Water temperature of 60°F (15.6°C)
(4) Suction hose size, number of hose, and lift as indicated in Table 18.2.4.1(a)
(5) Friction and entrance loss in suction hose, including strainer, as given in Table 18.2.4.1(b) or Table 18.2.4.1(c)

18.2.4.2* The pump manufacturer shall certify that the pump is capable of pumping rated capacity at 100 psi (700 kPa) net pump pressure at any of the following special conditions when these conditions are specified by the purchaser:

(1) At an elevation above 2000 ft (600 m)
(2) At lifts higher than those listed in Table 18.2.4.1(a), or through more than 20 ft (6 m) of suction hose, or both

Table 18.2.4.1(a) Suction Hose Size, Number of Suction Lines, and Lift for Industrial Supply Pumps

Rated Capacity		Maximum Suction Hose Size		Maximum Number of Suction Lines*	Maximum Lift	
gpm	L/min	in.	mm		ft	m
3000	12000	8	200	2	6	1.8
3000	12000	6	150	4	6	1.8
3500	14000	8	200	2	6	1.8
3500	14000	6	150	4	6	1.8
4000	16000	8	200	2	6	1.8
4000	16000	6	150	4	6	1.8
4500	18000	8	200	2	6	1.8
4500	18000	6	150	4	6	1.8
5000	20000	8	200	2	6	1.8
5000	20000	6	150	4	6	1.8

*Where more than one suction line is used, all suction lines do not have to be the same hose size.

Copyright National Fire Protection Association
Provided by IHS under license with NFPA
No reproduction or networking permitted without license from IHS
Not for Resale

Table 18.2.4.1(b) Friction and Entrance Loss in 20 ft of Suction Hose, Including Strainer (inch-pound units)

Flow Rate (gpm)	Suction Hose Size (inside diameter)					
	Two 6 in.		Three 6 in.		Four 6 in.	
	ft water	in. Hg	ft water	in Hg.	ft water	in. Hg
3000	7.6 (1.4)	6.9	3.4 (0.6)	3.0		
2100	3.7 (0.7)	3.4	1.7 (0.3)	1.5		
1500	1.9 (0.4)	1.7	0.9 (0.2)	0.8		
3500					2.6 (0.5)	2.3
2450					1.2 (0.3)	1.1
1750					0.7 (0.2)	0.6
4000			4.8 (0.9)	4.3	3.4 (0.6)	3.0
2800			2.8 (0.5)	2.5	1.7 (0.3)	1.5
2000			1.4 (0.3)	1.2	0.9 (0.2)	0.8
4500			7.6 (1.4)	6.7	4.3 (0.8)	3.8
3150			3.7 (0.7)	3.3	2.2 (0.4)	1.9
2250			1.9 (0.4)	1.7	1.1 (0.2)	1
5000			7.6 (1.4)	6.7	4.5 (0.9)	4
3500			3.8 (0.7)	3.4	2.3 (0.5)	2
2500			2.4 (0.4)	2.1	1.3 (0.3)	1.2

	One 8 in.		Two 8 in.		Three 8 in.		Four 8 in.	
	ft water	in. Hg	ft water	in. Hg	ft water	in. Hg	ft water	in. Hg
3000	10.1 (3.0)	9.0	2.3 (0.6)	2.1				
2100	4.7 (1.3)	4.2	1.0 (0.3)	0.9				
1500	2.3 (0.7)	2.1	0.6 (0.2)	0.5				
3500			3.2 (0.8)	2.8	1.4 (0.4)	1.3	0.8 (0.2)	0.7
2450			1.5 (0.4)	1.3	0.7 (0.2)	0.6	0.4 (0.1)	0.4
1750			0.7 (0.2)	0.7	0.4 (0.1)	0.4	0.2 (0.1)	0.2
4000			4.3 (1.1)	3.8	1.9 (0.5)	1.8	1.0 (0.3)	0.9
2800			2.0 (0.6)	1.8	0.9 (0.3)	0.8	0.5 (0.2)	0.5
2000			1.0 (0.3)	0.9	0.4 (0.2)	0.4	0.25 (0.1)	0.25
4500			5.6 (1.4)	5.0	2.5 (0.7)	2.3	1.2 (0.3)	1.1
3150			2.5 (0.9)	2.2	1.1 (0.4)	1.0	0.6 (0.2)	0.5
2250			1.2 (0.4)	1.1	0.5 (0.2)	0.4	0.3 (0.1)	0.3
5000			7.0 (1.7)	6.2	3.1 (0.8)	3.0	1.5 (0.4)	1.3
3500			3.2 (1.0)	2.8	1.5 (0.5)	1.3	0.8 (0.2)	0.7
2500			1.5 (0.4)	1.3	0.7 (0.2)	0.6	0.4 (0.1)	0.4

Note: Figures in parentheses indicate increment to be added or subtracted for each 10 ft of hose greater than or less than 20 ft.

18.3 Pumping Engine Requirements.

18.3.1 The apparatus manufacturer shall approve the use of the pumping engine for stationary pumping applications based on the size of the fire apparatus and the rating of the pump being furnished.

18.3.2 Engine Speed.

18.3.2.1 The engine shall be capable of performing the pumping tests herein specified without exceeding the maximum governed speed of the engine as shown on a certified brake horsepower curve of the type of engine used without accessories.

18.3.2.2 The brake horsepower curve certification shall be signed by a responsible official of the engine manufacturer.

18.3.3* If a separate pumping engine is provided, it shall meet the requirements of 12.2.1.1, 12.2.1.2, 12.2.1.6, 12.2.2, 12.2.3.1, 12.2.3.2, 12.2.4, 12.2.5, and Sections 13.4 and 13.5.

Copyright National Fire Protection Association
Provided by IHS under license with NFPA
No reproduction or networking permitted without license from IHS
Not for Resale

Table 18.2.4.1(c) Friction and Entrance Loss in 6 m of Suction Hose, Including Strainer (metric units)

	Suction Hose Size (inside diameter)					
	Two 150 mm		Three 150 mm		Four 150 mm	
Flow Rate (L/min)	m water	kPa	m water	kPa	m water	KPa
12,000	2.3 (0.4)	23	1.0 (0.2)	10		
8,400	1.1 (0.2)	12	0.5 (0.1)	5		
6,000	0.6 (0.1)	6	0.3 (0.1)	3		
14,000					0.8 (0.2)	8
9,800					0.4 (0.1)	4
7,000					0.2 (0.1)	2
16,000			1.5 (0.3)	15	1.0 (0.2)	10
11,200			0.9 (0.2)	8	0.5 (0.1)	5
8,000			0.4 (0.1)	4	0.3 (0.1)	3
18,000			2.3 (0.4)	23	1.3 (0.2)	13
12,600			1.1 (0.2)	11	0.7 (0.1)	6
9,000			0.6 (0.1)	6	0.3 (0.1)	3
20,000			2.3 (0.4)	23	1.4 (0.3)	14
14,000			1.2 (0.2)	12	0.7 (0.2)	7
10,000			0.7 (0.1)	7	0.4 (0.1)	4

	One 200 mm		Two 200 mm		Three 200 mm		Four 200 mm	
	m water	kPa	m water	kPa	m water	kPa	m water	kPa
12,000	3.1 (0.9)	31	0.7 (0.2)	7				
8,400	1.4 (0.4)	14	0.3 (0.1)	3				
6,000	0.7 (0.2)	7	0.2 (0.1)	2				
14,000			1.0 (0.2)	9	0.4 (0.1)	4	0.2 (0.1)	2
9,800			0.5 (0.1)	4	0.2 (0.1)	2	0.1 (0.1)	1
7,000			0.2 (0.1)	2	0.1 (0.1)	1	0.1 (0.1)	1
16,000			1.3 (0.3)	13	0.6 (0.2)	6	0.3 (0.1)	3
11,200			0.6 (0.2)	6	0.3 (0.1)	3	0.2 (0.1)	2
8,000			0.3 (0.1)	3	0.1 (0.1)	1	0.1 (0.1)	1
18,000			1.7 (0.4)	17	0.8 (0.2)	8	0.4 (0.1)	4
12,600			0.8 (0.3)	7	0.3 (0.1)	3	0.2 (0.1)	2
9,000			0.4 (0.1)	4	0.2 (0.1)	1	0.1 (0.1)	1
20,000			2.1 (0.5)	21	0.9 (0.2)	10	0.5 (0.1)	4
14,000			1.0 (0.3)	9	0.5 (0.2)	4	0.2 (0.1)	2
10,000			0.5 (0.1)	4	0.2 (0.1)	2	0.1 (0.1)	1

Note: Figures in parentheses indicate increments to be added or subtracted for each 3 m of hose less than or greater than 6 m.

18.3.4 A supplementary heat exchanger cooling system shall be provided for the pump drive engine.

18.3.4.1 Valving shall be installed to permit water from the discharge side of the pump to cool the coolant circulating through the engine cooling system without intermixing.

18.3.4.2 The heat exchanger shall maintain the temperature of the coolant in the pump drive engine not in excess of the engine manufacturer's temperature rating under all pumping conditions.

18.3.4.3 A drain(s) shall be provided to allow draining of the heat exchanger so as to prevent damage from freezing.

18.3.5 Indicator or Light.

18.3.5.1 Where a separate engine is used to drive the pump, an indicator or light that is energized when the pump engine is running shall be provided in the driving compartment.

18.3.5.2 The indicator or light shall be marked with a label that reads "Pump Engine Running."

Copyright National Fire Protection Association
Provided by IHS under license with NFPA
No reproduction or networking permitted without license from IHS
Not for Resale

18.4 Power Train Capability.

18.4.1 All components in the power train from the engine to the fire pump shall be capable of transmitting the torque necessary to power the pump, as installed in the apparatus, for the pump performance points specified in 18.2.3.1 without exceeding the component manufacturer's continuous duty torque rating.

18.4.2 When pumping continuously at each of the pump performance points specified in 18.2.3.1, lubricant temperatures in any power train component installed in the apparatus from the engine to the pump shall not exceed the component manufacturer's recommendation for maximum temperature.

18.4.3* A means shall be provided to limit the nominal net engine output to a torque level equal to the nominal continuous duty torque rating of the weakest component, or to a level equal to the sum of the nominal continuous duty torque ratings of multiple components, if there are multiple devices to be driven simultaneously.

18.5 Construction Requirements.

18.5.1* Wetted moving parts shall be constructed of a corrosion-resistant material.

18.5.2 Hydrostatic Test.

18.5.2.1 The pump body shall be subjected to a hydrostatic test to a gauge pressure of 500 psi (3400 kPa) minimum for 10 minutes.

18.5.2.2 The pump manufacturer shall provide a certificate of completion for the hydrostatic test.

18.5.3 Where an auxiliary pump is provided in combination with an industrial supply pump and where the pumps are interconnected so that pressure from one pump can be transmitted to the other pump, check valves, intake or discharge relief valves, pump drive gear ratios, or other automatic means shall be provided to avoid pressurizing either pump beyond its maximum rated hydrostatic pressure.

18.5.4 The entire discharge and intake piping system, valves, drain cocks and lines, and intake and outlet closures, excluding the tank fill and tank to pump lines on the tank side of the valves in those lines, shall be capable of withstanding a minimum hydrostatic burst gauge pressure of 500 psi (3400 kPa).

18.5.5 Pulsation-Free Fire Streams.

18.5.5.1 The pump shall be capable of producing fire streams that are free from pulsations.

18.5.5.2 When an accumulator is used to provide a pulsation-free fire streams, the accumulator shall be constructed and tested in accordance with the ASME *Boiler and Pressure Vessel Code*, Section VIII, Division 2.

18.5.6 The pump shall allow a positive pressure water source to directly add to the pump's net pump pressure.

18.6 Pump Intake Connections.

18.6.1* The pump shall have at least the number of intake(s) required to match one of the arrangements shown in Table 18.2.4.1(a) for the rated capacity of the pump, and the required intakes shall be at least equal in size to the size of the suction lines for that arrangement.

18.6.1.1 The intakes specified in 18.6.1 shall have male National Hose threads if the apparatus is to be used in the United States.

18.6.1.2 If the couplings on the suction hose carried on the apparatus are of a different size than the pump intake(s) or have means of hose attachment other than that provided on the intake(s), an adapter(s) shall be provided to allow connection of the suction hose to the pump intake(s).

18.6.1.3* A sign shall be provided on the pump operator's panel that states the following:

> **WARNING:** Death or serious injury might occur if proper operating procedures are not followed. The pump operator as well as individuals connecting supply or discharge hoses to the apparatus must be familiar with water hydraulics hazards and component limitations.

18.6.2 Intake Strainer.

18.6.2.1 Each intake shall have a removable or accessible strainer inside the connection.

18.6.2.2* The strainer(s) shall restrict spherical debris that is too large to pass through the pump.

18.6.3 At least one valved intake shall be provided that can be controlled from the pump operator's position.

18.6.3.1 The valve and piping shall be a minimum 2½ in. (65 mm) nominal size.

18.6.3.2 If the intake is 2½ in. (65 mm) nominal size, the intake shall be equipped with a female swivel coupling with National Hose threads.

18.6.4 Any 3 in. (75 mm) or larger intake valve except the tank-to-pump intake valve shall be a slow-operating valve.

18.6.5* Each valved intake shall be equipped with a bleeder valve having a minimum ¾ in. (19 mm) pipe thread connection to bleed off air or water.

18.6.5.1 The bleeder valve shall be operational without the operator having to get under the apparatus.

18.6.5.2 If a valved appliance is attached to an intake, it shall be equipped with a ¾ in. (19 mm) bleeder valve on each intake.

18.6.6 Each valved intake having a connection size of 3½ in. (90 mm) or larger shall be equipped with an adjustable automatic pressure relief device installed on the supply side of the valve to bleed off pressure from a hose connected to the valved intake.

18.6.6.1 The automatic pressure relief device shall be adjustable from a minimum of 90 psi (620 kPa) to at least 185 psi (1275 kPa).

18.6.6.2 The pressure relief device, when preset at 125 psi (860 kPa), shall not allow a pressure rise greater than 60 psi (400 kPa) at the device inlet while flowing a minimum of 150 gpm (570 L/min).

18.6.6.3 The pressure relief device shall discharge to atmosphere and the discharge shall be piped or directed away from the pump operator's position.

18.6.7 If the pump is equipped with one or more intakes larger than 3½ in. (89 mm) that are not valved, an adjustable automatic pressure relief device shall be installed on the pump system to bleed off excess pressure from a hose connected to the pump intake.

Copyright National Fire Protection Association
Provided by IHS under license with NFPA
No reproduction or networking permitted without license from IHS
Not for Resale

18.6.7.1 The automatic pressure relief device shall be adjustable from a minimum of 90 psi (620 kPa) to at least 185 psi (1275 kPa).

18.6.7.2 The pressure relief device, when preset at 125 psi (860 kPa), shall not allow a pressure rise greater than 60 psi (400 kPa) at the device inlet flowing a minimum of 150 gpm (570 L/min).

18.6.7.3 The pressure relief device shall discharge to atmosphere.

18.6.8 All intakes shall be provided with caps or closures capable of withstanding a hydrostatic burst gauge pressure of 500 psi (3400 kPa).

18.6.8.1 Intakes having male threads shall be equipped with caps; intakes having female threads shall be equipped with plugs.

18.6.8.2 Where adapters for special threads or other means for hose attachment are provided on the intakes, closures shall be provided for the adapters in lieu of caps or plugs.

18.6.9 Caps or closures for 3½ in. (90 mm) and smaller intakes shall be removable from the intakes but remain secured to the apparatus.

18.6.10 If the suction inlets are to be equipped with a valve, siamese, or adapter that will remain in place while the apparatus is in motion, that valve, siamese, or adapter shall not project beyond the apparatus running board.

18.6.11 The purchaser shall specify if any valve, siamese, or adapter is to be permanently installed on an intake and identify the brand and model of such item.

18.7* Pump Discharge Outlets.

18.7.1* Discharge outlets of 2½ in. (65 mm) or larger shall be provided to discharge the rated capacity of the pump at the flow rates shown in Table 18.7.1.

Table 18.7.1 Discharge Rates by Outlet Size

Outlet Size		Flow Rates	
in.	mm	gpm	L/min
2½	65	250	1000
3	75	375	1400
3½	90	500	2000
4	100	625	2400
4½	110	750	3000
5	125	1000	4000
6	150	1440	5500

18.7.1.1 If the apparatus is equipped with an aerial device with a waterway that is permanently connected to the pump, the discharge from that waterway shall be permitted to be credited as a 1000 gpm (4000 L/min) outlet.

18.7.1.2 A minimum of two 2½ in. (65 mm) outlets shall be provided.

18.7.2 Discharge Outlet Connections.

18.7.2.1 All 2½ in. (65 mm) or larger discharge outlets shall be equipped with male National Hose threads.

18.7.2.2* Adapter couplings with special threads or other means for hose attachment shall be permitted to be furnished on any or all outlets.

18.7.3* The piping and valves supplying any preconnected 1½ in. (38 mm), 1¾ in. (45 mm), or 2 in. (52 mm) hose line, including the piping to the preconnected hose storage areas specified in Section 11.7(2), shall be at least 2 in. (52 mm) in size.

18.7.4 All discharge outlets, except outlets to which a hose will be preconnected, shall be equipped with caps or closures capable of withstanding a minimum hydrostatic burst gauge pressure of 100 psi (700 kPa) over the maximum pump close-off pressure or 500 psi (3400 kPa), whichever is greater.

18.7.4.1 Where adapters are provided on the discharge outlets, the closures shall fit on the adapters.

18.7.4.2 Caps or closures for outlets 3½ in. (90 mm) and smaller in size shall be removable from the outlet but remain secured to the apparatus.

18.7.5 Each discharge outlet shall be equipped with a valve that can be opened and closed smoothly at the flows shown in Table 18.7.1 at pump discharge gauge pressures of 250 psi (1700 kPa).

18.7.5.1 The flow-regulating element of each valve shall not change its position under any condition of operation that involves discharge pressures to the maximum pressure of the pump; the means to prevent a change in position shall be incorporated in the operating mechanism and shall be permitted to be manually or automatically controlled.

18.7.5.2* Any 3 in. (75 mm) or larger discharge valve shall be a slow-operating valve.

18.7.6 All 1½ in. (38 mm) or larger discharge outlets shall be equipped with a drain or bleeder valve having a minimum ¾ in. (19 mm) pipe thread connection for draining or bleeding off pressure from a hose connected to the outlet.

18.7.7 Any 2 in. (52 mm) or larger discharge outlet that is located more than 42 in. (1070 mm) off the ground to which hose is to be connected and that is not in a hose storage area shall be supplied with a sweep elbow of at least 30 degrees downward.

18.7.8 Valves.

18.7.8.1 Each pump discharge shall have a valve that can be controlled from the pump operator's position.

18.7.8.2 A secondary valve shall be permitted to be provided at a discharge outlet if required for special applications.

18.7.9* Location of Discharge Outlets.

18.7.9.1 No discharge outlet larger than 2½ in. (65 mm) shall be located at the pump operator's panel.

18.7.9.2 If the apparatus has a top console–type pump operator's panel, vertical discharge outlets larger than 2½ in. (65 mm) shall be permitted at the top midship position of apparatus where the outlets are used for directly connected deck guns or monitors and no fire hose is used for coupling the components.

18.7.10 Where the valve-operating mechanism does not indicate the position of the valve, an indicator shall be provided to show when the valve is closed.

Copyright National Fire Protection Association
Provided by IHS under license with NFPA
No reproduction or networking permitted without license from IHS
Not for Resale

18.8 Pump Drains.

18.8.1 A readily accessible drain valve(s) that is marked with a label as to its function shall be provided to allow for draining of the pump and all water-carrying lines and accessories.

18.8.2 The drain valve(s) shall be operational without the operator having to get under the apparatus.

18.9 Pump Operator's Panel.

18.9.1* Each pump control, gauge, and other instrument necessary to operate the pump shall be located on a panel known as the pump operator's panel and shall be marked with a label as to its function.

18.9.2 All gauges, discharge outlets, pump intakes, and controls shall be illuminated to a minimum lighting level of 5 fc (50 lx).

18.10* Pump Controls.

18.10.1 General Provisions. Provisions shall be made for placing the pump drive system in operation using controls and switches that are identified and within convenient reach of the operator.

18.10.1.1 Where the pump is driven by the chassis engine and engine compression brakes or engine exhaust brakes are furnished, these engine brakes shall be automatically disengaged for pumping operations.

18.10.1.2* Any control device used in the pumping system power train between the engine and the pump, except a manual pump shift override device if provided, shall be equipped with a means to prevent unintentional movement of the control device from its set position in the pumping mode.

18.10.1.3 A label indicating the chassis transmission shift selector position to be used for pumping shall be provided in the driving compartment and located so that it can be read from the driver's position.

18.10.1.4 Where the pump is driven by the chassis engine and transmission through a split shaft PTO, the driving compartment speedometer shall register when the pump drive system is engaged.

18.10.1.5 Where chassis transmission retarders are furnished, they shall be automatically disengaged for pumping operations.

18.10.2 Stationary Pump Driven Through Split-Shaft PTO — Automatic Chassis Transmission. Where the apparatus is equipped with an automatic chassis transmission, the water pump is driven by the chassis engine through the transmission's main driveline, and the apparatus is to be used for stationary pumping only, an interlock system shall be provided to ensure that the pump drive system components are engaged in the pumping mode of operation so that the pumping system can be operated from the pump operator's position.

18.10.2.1* A "Pump Engaged" indicator shall be provided in the driving compartment to indicate that the pump shift process has been successfully completed.

18.10.2.2 An "OK to Pump" indicator shall be provided in the driving compartment to indicate that the pump is engaged, the chassis transmission is in pump gear, and the parking brake is engaged.

18.10.2.3 A "Throttle Ready" indicator shall be provided at the pump operator's panel that indicates that the apparatus is in "OK to Pump" mode or that the chassis transmission is in neutral and the parking brake is engaged.

18.10.3 Stationary Pump Driven Through Split-Shaft PTO — Manual Chassis Transmission. Where the apparatus is equipped with a manual chassis transmission, the water pump is driven by the chassis engine through the transmission's main driveline, and the apparatus is to be used for stationary pumping only, an interlock system shall be provided to ensure that the pump drive system components are engaged in the pumping mode of operation so that the pumping system can be operated from the pump operator's position.

18.10.3.1* A "Pump Engaged" indicator shall be provided in the driving compartment to indicate that the pump shift has been successfully completed.

18.10.3.2 An "OK to Pump" indicator shall be provided in the driving compartment to indicate that the pump is engaged and the parking brake is engaged.

18.10.3.3 A "Throttle Ready" indicator shall be provided at the pump operator's panel to indicate that the apparatus is in "OK to Pump" mode or that the parking brake is engaged.

18.10.4 Stationary Pump Driven Through Transmission-Mounted PTO, Front-of-Engine Crankshaft PTO, or Engine Flywheel PTO — Automatic Chassis Transmission. Where the apparatus is equipped with an automatic chassis transmission, the water pump is driven by a transmission-mounted (SAE) PTO, front-of-engine crankshaft PTO, or engine flywheel PTO, and the apparatus is to be used for stationary pumping only with the chassis transmission in neutral, an interlock system shall be provided to ensure that the pump drive system components are engaged in the pumping mode of operation so that the pump system can be operated from the pump operator's position.

18.10.4.1 A "Pump Engaged" indicator shall be provided both in the driving compartment and on the pump operator's panel to indicate that the pump shift has been successfully completed.

18.10.4.2 An "OK to Pump" indicator shall be provided in the driving compartment to indicate that the pump is engaged, the chassis transmission is in neutral, and the parking brake is engaged.

18.10.4.3 A "Throttle Ready" indicator shall be provided at the pump operator's panel to indicate that the apparatus is in "OK to Pump" mode or that the chassis transmission is in neutral and the parking brake is engaged.

18.10.5 Stationary Pump Driven Through Transmission-Mounted PTO, Front-of-Engine Crankshaft PTO, or Engine Flywheel PTO — Manual Chassis Transmissions. Where the apparatus is equipped with an manual chassis transmission, the water pump is driven by a transmission-mounted (SAE) PTO, front-of-engine crankshaft PTO, or engine flywheel PTO, and the apparatus is to be used for stationary pumping only with the chassis transmission in neutral, an interlock system shall be provided to ensure that the pump drive system components are engaged in the pumping mode of operation so that the pump system can be operated from the pump operator's position.

18.10.5.1 A "Pump Engaged" indicator shall be provided both in the driving compartment and on the pump operator's panel to indicate that the pump shift has been successfully completed.

18.10.5.2 An "OK to Pump" indicator shall be provided in the driving compartment to indicate that the pump is engaged and the parking brake is engaged.

18.10.5.3 A "Throttle Ready" indicator shall be provided at the pump operator's panel to indicate that the apparatus is in "OK to Pump" mode or that the parking brake is engaged.

--`,,```,,,,````-`-`,,`,,`,`,,`---

Copyright National Fire Protection Association
Provided by IHS under license with NFPA
No reproduction or networking permitted without license from IHS
Not for Resale

18.10.6 Stationary and "Pump-and-Roll" Pump — Automatic Chassis Transmissions. Where the water pump is driven by a transmission-mounted (SAE) PTO, front-of-engine crankshaft PTO, or engine flywheel PTO, and the apparatus is designed to be used in both the stationary pumping mode and the "pump-and-roll" pumping mode with the automatic chassis transmission in neutral for stationary pumping and in a road gear for pump-and-roll pumping, an interlock system shall be provided to ensure that the pump drive system components are properly engaged in the pumping mode of operation so that the apparatus can be operated in either stationary or pump-and-roll pumping mode.

18.10.6.1 A "Pump Engaged" indicator shall be provided both in the driving compartment and at the pump operator's panel to indicate that the pump shift has been successfully completed.

18.10.6.2 Indicators.

18.10.6.2.1 An "OK to Pump" indicator shall be provided in the driving compartment to indicate that the pump is engaged, the chassis transmission is in neutral, and the parking brake is engaged.

18.10.6.2.2 An "OK to Pump and Roll" indicator shall be provided in the driving compartment and shall be energized when the pump is engaged, the chassis transmission is in road gear, and the parking brake is released.

18.10.6.2.3 When the "OK to Pump and Roll" indicator is energized, the "OK to Pump" indicator shall not be energized.

18.10.6.3 A "Throttle Ready" indicator shall be provided at the pump operator's panel that is energized when the "OK to Pump" indicator is energized or when the chassis transmission is in neutral and the parking brake is engaged.

18.10.7 Stationary and "Pump-and-Roll" Pumps — Manual Chassis Transmissions. Where the water pump is driven by a transmission-mounted (SAE) PTO, front-of-engine crankshaft PTO, or engine flywheel PTO, and the apparatus is designed to be used in both the stationary pumping mode and the pump-and-roll pumping mode with the chassis transmission in neutral for stationary pumping or in a road gear for pump-and-roll pumping, an interlock system shall be provided to ensure that the pump drive system components are properly engaged in the pumping mode of operation so that the apparatus can be operated in either stationary or pump-and-roll pumping mode.

18.10.7.1 A "Pump Engaged" indicator shall be provided both in the driving compartment and at the pump operator's panel to indicate that the pump shift has been successfully completed.

18.10.7.2 An "OK to Pump" indicator shall be provided in the driving compartment to indicate that the pump is engaged and the parking brake is engaged.

18.10.7.3 An "OK to Pump and Roll" indicator shall be provided in the driving compartment and shall be energized when the pump is engaged and the parking brake is released.

18.10.7.4 When the "OK to Pump and Roll" indicator is energized, the "OK to Pump" indicator shall not be energized.

18.10.7.5 A "Throttle Ready" indicator shall be provided at the pump operator's panel that is energized when the "OK to Pump" indicator is energized or when the parking brake is engaged.

18.10.8 Stationary Pumps Driven Through Transfer Case PTOs — Automatic Chassis Transmissions. Where the apparatus is equipped with an automatic chassis transmission, the water pump is driven by the chassis engine through the transmission's main driveline and through a transfer case, and the apparatus is to be used for stationary pumping only, an interlock system shall be provided to ensure that the pump drive system components are engaged in the pumping mode of operation so that the pumping system can be operated from the pump operator's position.

18.10.8.1 A "Pump Engaged" indicator shall be provided in the driving compartment to indicate that the pump shift has been successfully completed.

18.10.8.2 An "OK to Pump" indicator shall be provided in the driving compartment to indicate that the pump is engaged, the chassis transmission is in pump gear, the transfer case drive to the chassis wheels is in neutral, and the parking brake is engaged.

18.10.8.3 A "Throttle Ready" indicator shall be provided at the pump operator's panel to indicate that the apparatus is in "OK to Pump" mode or that the chassis transmission is in neutral and the parking brake is engaged.

18.10.9 Stationary Pumps Driven Through Transfer Case PTOs — Manual Chassis Transmissions. Where the apparatus is equipped with a manual chassis transmission, the water pump is driven by the chassis engine through the transmission's main driveline and through a transfer case, and the apparatus is to be used for stationary pumping only, an interlock system shall be provided to ensure that the pump drive system components are engaged in the pumping mode of operation so that the pumping system can be operated from the pump operator's position.

18.10.9.1 A "Pump Engaged" indicator shall be provided in the driving compartment to indicate that the pump shift has been successfully completed.

18.10.9.2 An "OK to Pump" indicator shall be provided in the driving compartment to indicate that the pump is engaged, the transfer case drive to the chassis wheels is in neutral, and the parking brake is engaged.

18.10.9.3 A "Throttle Ready" indicator shall be provided at the pump operator's panel to indicate that the apparatus is in "OK to Pump" mode or that the parking brake is engaged.

18.10.10 Pump Operator's Panel Engine Speed Advancement — Automatic Chassis Transmission. An interlock system shall be provided to prevent advancement of the engine speed at the pump operator's panel unless the chassis transmission is in neutral and the parking brake is engaged or the apparatus is in the "OK to Pump" mode.

18.10.11 Pump Operator's Panel Engine Speed Advancement — Manual Chassis Transmission. An interlock system shall be provided to prevent advancement of the engine speed at the pump operator's panel unless the parking brake is engaged or the apparatus is in the "OK to Pump" mode.

18.10.12 Parallel/Series Control.

18.10.12.1 With parallel/series centrifugal pumps, the control positions for parallel operation (volume) and series operation (pressure) shall be indicated.

18.10.12.2 The control for changing the pump from series to parallel, and vice versa, shall be operable at the pump operator's position.

Copyright National Fire Protection Association
Provided by IHS under license with NFPA
No reproduction or networking permitted without license from IHS
Not for Resale

18.10.13* Pressure Control System.

18.10.13.1* A system shall be provided that, when set in accordance with the manufacturer's instructions, will automatically control the discharge pressure to a maximum of 30 psi (200 kPa) pressure rise above the set pressure(s) when all discharge valves are closed not more rapidly than in 3 seconds and not more slowly than in 10 seconds, during the following conditions:

(1) Over a range of pressures from 70 psi to 300 psi (500 kPa to 2000 kPa) net pump pressure with intake gauge pressure between –10 psi and 185 psi (–70 kPa and 1300 kPa) and discharge gauge pressure between 90 psi and 300 psi (620 kPa and 2000 kPa)
(2) With initial engine and pump controls set to produce a range of flows from 150 gpm (550 L/min) to the rated capacity of the pump

18.10.13.2 If the pump is equipped with a relief valve system where the system does not control engine speed, the system shall be equipped with a means to indicate when the system is in control of the pressure.

18.10.13.2.1 If the pump is equipped with a governor system that controls engine speed, an indicator shall show when the system is turned on and whether it is controlling the engine speed or pump pressure.

18.10.13.2.2 Either system shall be controllable by one person at the pump operator position.

18.10.13.3 If the system discharges water to the atmosphere, the discharge shall be in a manner that will not expose personnel to high pressure water streams.

18.10.14* Priming Device. A priming device shall be provided and controlled from the pump operator's position.

18.10.14.1 The priming device shall be capable of meeting the requirements of 18.2.3.2 and 18.2.3.3.

18.10.14.2 The priming device shall be capable of operating with no lubricant or with a biodegradable nontoxic lubricant.

18.10.15 Protection of Pump Controls. All pump controls and devices shall be installed so as to be protected against mechanical damage and the effects of adverse weather conditions on their operation.

18.11 Pump Engine Controls.

18.11.1* A throttle control that holds its set position shall be provided to control the pump engine speed.

18.11.2 The throttle control shall be located not higher than 72 in. (1800 mm) nor lower than 42 in. (1070 mm) from the operator's standing position with all instruments in full view.

18.12 Instrumentation.

18.12.1 Pump Operator's Panel.

18.12.1.1* The following controls and instruments shall be provided and installed as a group at the pump operator's panel:

(1) A master pump intake pressure–indicating device
(2) A master pump discharge pressure–indicating device
(3) A pumping engine tachometer
(4) A pumping engine coolant temperature indicator
(5) A pumping engine oil pressure indicator
(6) A voltmeter
(7) The pump pressure control(s)
(8) The pumping engine throttle
(9) The primer control
(10) The water tank to pump valve control
(11) The water tank fill valve control
(12) The water tank level indicator

18.12.1.2 The instruments and controls required by 18.12.1.1 shall be placed so as to keep the pump operator as far as practicable from all discharge and intake connections and in a location where the instruments and controls are visible and operationally functional while the operator remains stationary.

18.12.1.3 Any instrumentation exposed to the elements shall be weatherproof.

18.12.1.4 The pumping engine oil pressure and engine coolant temperature indicators shall be equipped with audible and visual warnings.

18.12.1.5 All engine operation indicators on the pump operator's panel shall be in addition to those on the vehicle's instrument panel.

18.12.2 Master Pump Intake and Discharge Pressure–Indicating Devices.

18.12.2.1 Master pump intake and pump discharge pressure–indicating devices shall be located within 8 in. (200 mm) of each other, edge to edge, with the intake pressure–indicating device to the left of or below the pump discharge pressure–indicating device.

18.12.2.1.1 The intake pressure–indicating device shall read from 30 in. Hg (100 kPa) vacuum to at least a gauge pressure of 300 psi (2000 kPa).

18.12.2.1.2 The discharge pressure–indicating device shall read from a gauge pressure of 0 psi or lower to a gauge pressure of at least 300 psi (2000 kPa).

18.12.2.1.3 Pressure-indicating devices shall not be damaged by a 30 in. Hg (100 kPa) vacuum.

18.12.2.1.4 Pressure-indicating devices shall be marked with labels that read "Pump Intake" for the intake pressure–indicating device and "Pump Discharge" for the discharge pressure–indicating device.

18.12.2.1.5 Where analog gauges are used, there shall be at least a 1 in. (25 mm) diameter differential in viewing area between the master gauges and the individual discharge gauges, with the master gauges being the larger.

18.12.2.1.5.1 The accuracy of gauges shall be a minimum of Grade 1A as defined in ASME B40.100, *Pressure Gauges and Gauge Attachments*.

18.12.2.1.5.2 Numerals for master gauges shall be a minimum of 0.25 in. (6.4 mm) high.

18.12.2.1.5.3 There shall be graduation lines showing at least every 10 psi (70 kPa), with major and intermediate graduation lines emphasized and figures at least every 100 psi (700 kPa).

18.12.2.1.5.4 Analog pressure gauges shall be vibration and pressure pulsation dampened; be resistant to corrosion, condensation, and shock; and have internal mechanisms that are factory lubricated for the life of the gauge.

18.12.2.1.6 If digital master pressure-indicating devices are used, they shall meet the requirements of 18.12.2.1.6.1 through 18.12.2.1.6.3.

Copyright National Fire Protection Association
Provided by IHS under license with NFPA
No reproduction or networking permitted without license from IHS
Not for Resale

18.12.2.1.6.1 The digits shall be at least ½ in. (12.7 mm) high.

18.12.2.1.6.2 Digital pressure-indicating devices shall display pressure in increments of not more than 10 psi (70 kPa).

18.12.2.1.6.3 Digital master pressure-indicating devices shall have an accuracy of ±3 percent over the full scale.

18.12.3 Discharge Outlet Instrumentation.

18.12.3.1 A flowmeter or a pressure-indicating device shall be provided for each discharge outlet 1½ in. (38 mm) or larger in size and shall be marked with a label to indicate the outlet to which it is connected.

18.12.3.2* Any discharge outlet 3½ in. (90 mm) or larger that is equipped with a flowmeter shall also be provided with a pressure-indicating device.

18.12.3.3 The pressure-indicating device or flowmeter display shall be located adjacent to the corresponding valve control with no more than 6 in. (150 mm) separating the pressure-indicating device or flowmeter bezel and the valve control midpoint or centerline.

18.12.3.4 If both a flowmeter and a pressure-indicating device are provided for an individual discharge outlet, the pressure-indicating device shall be located within 6 in. (150 mm) of the valve control midpoint or centerline, and the flowmeter display shall be adjacent to and within 2 in. (52 mm) of the pressure-indicating device bezel.

18.12.3.5 Pressure-indicating devices shall be connected to the outlet side of the valve.

18.12.3.6 Flowmeters shall display flow in increments no greater than 10 gpm (38 L/min).

18.12.3.7 Where analog pressure gauges are used, they shall have a minimum accuracy of Grade B as defined in ASME B40.100, *Pressure Gauges and Gauge Attachments*.

18.12.3.7.1 Numerals for gauges shall be a minimum 5⁄32 in. (4 mm) high.

18.12.3.7.2 There shall be graduation lines showing at least every 10 psi (70 kPa), with major and intermediate graduation lines emphasized and figures at least every 100 psi (700 kPa).

18.12.3.7.3 Analog pressure gauges shall be vibration and pressure pulsation dampened; be resistant to corrosion, condensation, and shock; and have internal mechanisms that are factory lubricated for the life of the gauge.

18.12.3.8 If digital pressure-indicating devices are used, they shall meet the requirements of 18.12.3.8.1 through 18.12.3.8.3.

18.12.3.8.1 The digits shall be at least ¼ in. (6.4 mm) high.

18.12.3.8.2 Digital pressure-indicating devices shall display pressure in increments of not more than 10 psi (70 kPa).

18.12.3.8.3 Digital pressure indicating devices shall have an accuracy of ±3 percent over the full scale.

18.12.3.9 Each flowmeter shall be calibrated to an accuracy of ±5 percent when flowing the amount of water shown in Table 18.12.3.9 for the pipe size in which it is mounted.

18.12.4 Each pressure-indicating device or flowmeter, and its respective display, shall be mounted and attached so it is protected from accidental damage and excessive vibration.

18.12.5 Connections for test gauges shall be provided at the pump operator's panel.

Table 18.12.3.9 Flowmeter Calibration Flow for Each Pipe Size

Pipe Size		Flow	
in.	mm	gpm	L/min
1	25	40	150
1½	38	90	340
2	52	160	600
2½	65	250	950
3	75	375	1400
4	100	625	2400
5	125	1000	4000
6	150	1440	5500

18.12.5.1 One test gauge connection shall be connected to the intake side of the pump, and the other shall be connected to the discharge manifold of the pump.

18.12.5.2 The test gauge connections shall have a 0.25 in. (6.4 mm) standard pipe thread, shall be plugged, and shall be marked with a label.

18.13 Required Testing.

18.13.1 Pump Certification.

18.13.1.1 The pump shall be tested after the pump and all its associated piping and equipment have been installed on the apparatus.

18.13.1.1.1 The tests shall include at least the pumping test *(see 18.13.2)*, the pressure control system test *(see 18.13.3)*, the priming device tests *(see 18.13.4)*, and the vacuum test *(see 18.13.5)*.

18.13.1.1.2 If the apparatus is equipped with a water tank, the water tank to pump flow test *(see 18.13.6)* shall be included.

18.13.1.1.3 An independent third-party certification organization shall witness the tests and certify the tests results.

18.13.1.2 Test Plates.

18.13.1.2.1 A test plate shall be provided at the pump operator's panel that gives the rated discharges and pressures together with the speed of the engine as determined by the certification test for each unit, the position of the parallel/series pump as used, and the governed speed of the engine as stated by the engine manufacturer on a certified brake horsepower curve.

18.13.1.2.2 The plate shall be completely stamped with all information at the factory and attached to the vehicle prior to shipping.

18.13.2 Pumping Test.

18.13.2.1 Conditions for Test.

18.13.2.1.1 The test site shall be adjacent to a supply of clear water at least 4 ft (1.2 m) deep, with the water level not more than 10 ft (3 m) below the center of the pump intake, and close enough to allow the suction strainer to be submerged at least 2 ft (0.6 m) below the surface of the water when connected to the pump by 20 ft (6 m) of suction hose.

18.13.2.1.2* Tests shall be performed when conditions are as follows:

(1) Air temperature: 0°F to 110°F (–18°C to 43°C)
(2) Water temperature: 35°F to 90°F (2°C to 32°C)
(3) Barometric pressure: 29 in. Hg (98.2 kPa), minimum (corrected to sea level)

--`,,```,,,,````-`-`,,`,,`,`,,`---

Copyright National Fire Protection Association
Provided by IHS under license with NFPA
No reproduction or networking permitted without license from IHS
Not for Resale

18.13.2.1.3 Engine-driven accessories shall not be functionally disconnected or otherwise rendered inoperative during the tests.

18.13.2.1.3.1 If the chassis engine drives the pump, the total continuous electrical loads excluding those associated with the equipment defined in 18.13.2.1.3.3 shall be applied for the entire pumping portion of this test.

18.13.2.1.3.2 If the vehicle is equipped with a fixed power source driven by the same engine that drives the fire pump, it shall be running at a minimum of 50 percent of its rated capacity throughout the pumping portion of the pump test.

18.13.2.1.3.3 The following devices shall be permitted to be turned off or not operating during the pump test:

(1) Aerial hydraulic pump
(2) Foam pump
(3) Hydraulically driven equipment (other than hydraulically driven line voltage generator)
(4) Winch
(5) Windshield wipers
(6) Four-way hazard flashers
(7) Compressed air foam system (CAFS) compressor

18.13.2.1.4 All structural enclosures, such as floorboards, gratings, grills, and heat shields, not furnished with a means for opening them in service shall be kept in place during the tests.

18.13.2.2 Equipment.

18.13.2.2.1 Suction Hose.

18.13.2.2.1.1 The suction hose shall be of the appropriate size for the rated capacity of the pump *[see Table 18.2.4.1(a)]*.

18.13.2.2.1.2 A suction strainer and hose that will allow flow with total friction and entrance loss not greater than that specified in Table 18.2.4.1(b) or Table 18.2.4.1(c) shall be used.

18.13.2.2.2 Sufficient fire hose shall be provided to discharge the rated capacity of the pump to the nozzles or other flow measuring equipment without exceeding a flow velocity of 35 ft/sec (10 m/sec) [approximately 500 gpm (2000 L/min) for 2½ in. (65 mm) hose].

18.13.2.2.3 Where nozzles are used, they shall be smoothbore, and the inside diameters shall be from ¾ in. to 2½ in. (19 mm to 63.5 mm).

18.13.2.2.4 Test Gauges.

18.13.2.2.4.1 All test gauges shall meet the requirements for Grade A gauges as defined in ASME B40.100, *Pressure Gauges and Gauge Attachments*, and shall be at least size 3½ per ASME B40.100.

18.13.2.2.4.2 A mercury manometer shall be permitted to be used in lieu of a pump intake gauge.

18.13.2.2.4.3 The pump intake gauge shall have a range of 30 in. Hg (100 kPa) vacuum to zero for a vacuum gauge, or 30 in. Hg (100 kPa) vacuum to a gauge pressure of 150 psi (1000 kPa) for a compound gauge.

18.13.2.2.4.4 The discharge pressure gauge shall have a gauge pressure range of 0 psi to 400 psi (0 kPa to 2800 kPa).

18.13.2.2.4.5 Pilot gauges shall have a gauge pressure range of at least 0 psi to 160 psi (0 kPa to 1100 kPa).

18.13.2.2.4.6 All gauges shall be calibrated in the month preceding the tests using a dead-weight gauge tester or a master gauge meeting the requirements for Grade 3A or 4A gauges, as defined in ASME B40.100, *Pressure Gauges and Gauge Attachments*, that has been calibrated within the preceding year.

18.13.2.2.5 Each test gauge connection shall include a means for "snubbing," such as a needle valve to damp out rapid needle movements.

18.13.2.2.6* The engine speed–measuring equipment shall consist of a nonadjustable tachometer supplied from the engine or transmission electronics, a revolution counter on a checking shaft outlet and a stop watch, or other engine speed–measuring means that is accurate to within ± 50 rpm of actual speed.

18.13.2.3 Procedure.

18.13.2.3.1* The ambient air temperature, water temperature, vertical lift, elevation of test site, and atmospheric pressure (corrected to sea level) shall be determined and recorded prior to and after each pump test.

18.13.2.3.2* The engine, pump, transmission, and all parts of the apparatus shall exhibit no undue heating, loss of power, or other defect during the entire test.

18.13.2.3.3 The pump shall be subjected to a 3 hour pumping test from draft consisting of 2 hours of continuous pumping at rated capacity at 100 psi (700 kPa) net pump pressure, followed by ½ hour of continuous pumping at 70 percent of rated capacity at 150 psi (1000 kPa) net pump pressure, and ½ hour of continuous pumping at 50 percent of rated capacity at 200 psi (1400 kPa) net pump pressure.

18.13.2.3.3.1 The pump shall not be stopped until after the 2 hour test at rated capacity, unless it becomes necessary to clean the suction strainer.

18.13.2.3.3.2 The pump shall be permitted to be stopped between tests in order to change the hose or nozzles, clean the strainer, or add fuel for the pump drive engine.

18.13.2.3.3.3 The capacity, discharge pressure, intake pressure, and engine speed shall be recorded at least every 15 minutes but not fewer than three times for each test sequence.

18.13.2.3.3.4 The average net pump pressure shall be calculated and recorded based on the average values for discharge and intake pressure.

18.13.3 Pressure Control System Test. The pressure control system on the pump shall be tested as follows:

(1) The pump shall be operated at draft, delivering rated capacity at a discharge gauge pressure of 100 psi (700 kPa).
(2) The pressure control system shall be set in accordance with the manufacturer's instructions to maintain the discharge gauge pressure at 100 psi (700 kPa) ±5 percent.
(3) All discharge valves shall be closed not more rapidly than in 3 seconds' and not more slowly than in 10 seconds.
(4) The rise in discharge pressure shall not exceed 30 psi (200 kPa) and shall be recorded.
(5) The pump shall be operated at draft, pumping 50 percent of rated capacity at a discharge gauge pressure of 200 psi (1400 kPa).
(6) The pressure control system shall be set in accordance with the manufacturer's instructions to maintain the discharge gauge pressure at 200 psi (1400 kPa) ±5 percent.
(7) All discharge valves shall be closed not more rapidly than in 3 seconds and not more slowly than in 10 seconds.
(8) The rise in discharge pressure shall not exceed 30 psi (200 kPa) and shall be recorded.

--`,,```,,,,````-`-`,,`,,`,`,,`---

Copyright National Fire Protection Association
Provided by IHS under license with NFPA
No reproduction or networking permitted without license from IHS
Not for Resale

18.13.4 Priming Device Tests. With the apparatus set up for the pumping test, the primer shall be operated in accordance with the manufacturer's instructions until the pump has been primed and is discharging water.

18.13.4.1 This test shall be permitted to be performed in connection with priming the pump for the pumping test.

18.13.4.2 The interval from the time the primer is started until the time the pump is discharging water shall be noted.

18.13.4.3 The time required to prime the pump shall not exceed 45 seconds.

18.13.4.4 An additional 15 seconds shall be permitted to meet the requirements of 18.13.4.3 when the pump system includes an auxiliary 4 in. (100 mm) or larger intake pipe having a volume of 1 ft^3 (0.03 m^3) or more.

18.13.5 Vacuum Test. The vacuum test shall consist of subjecting the interior of the pump, with all intake valves open, all intakes capped or plugged, and all discharge caps removed, to a vacuum of 22 in. Hg (75 kPa) by means of the pump priming device.

18.13.5.1 At altitudes above 2000 ft (600 m), the vacuum attained shall be permitted to be less than 22 in. Hg (75 kPa) by 1 in. Hg (3.4 kPa) for each 1000 ft (305 m) of altitude above 2000 ft (600 m).

18.13.5.2 The vacuum shall not drop more than 10 in. Hg (34 kPa) in 5 minutes.

18.13.5.3 The primer shall not be used after the 5 minute test period has begun.

18.13.5.4 The engine shall not be operated at any speed greater than the governed speed during this test.

18.13.6 Water Tank to Pump Flow Test.

18.13.6.1 A water tank to pump flow test shall be conducted as follows:

(1) The water tank shall be filled until it overflows.
(2) All intakes to the pump shall be closed.
(3) The tank fill line and bypass cooling line shall be closed.
(4) Hose lines and nozzles for discharging water at the rated tank to pump flow rate shall be connected to one or more discharge outlets.
(5) The tank-to-pump valve(s) and the discharge valves leading to the hose lines and nozzles shall be fully opened.
(6) The engine throttle shall be adjusted until the required flow rate –0/+5 percent is established *(see 19.3.2)*.
(7) The discharge pressure shall be recorded.
(8) The discharge valves shall be closed and the water tank refilled.
(9) The bypass line shall be permitted to be opened temporarily, if needed, to keep the water temperature in the pump within acceptable limits.
(10) The discharge valves shall be reopened fully and the time noted.
(11) If necessary, the engine throttle shall be adjusted to maintain the discharge pressure recorded as noted in 18.13.6.1(7).
(12) When the discharge pressure drops by 10 psi (70 kPa) or more, the time shall be noted and the elapsed time from the opening of the discharge valves shall be calculated and recorded.

18.13.6.2 Volume Discharge Calculation.

18.13.6.2.1 The volume discharged shall be calculated by multiplying the rate of discharge in gallons per minute (liters per minute) by the time in minutes elapsed from the opening of the discharge valves until the discharge pressure drops by at least 10 psi (70 kPa).

18.13.6.2.2 Other means shall be permitted to be used to determine the volume of water pumped from the tank such as a totalizing flowmeter, weighing the truck before and after, or refilling the tank using a totalizing flowmeter.

18.13.6.3 The rated tank-to-pump flow rate shall be maintained until 80 percent of the rated capacity of the tank has been discharged.

18.13.7* Manufacturer's Predelivery Test.

18.13.7.1 The manufacturer shall conduct a piping hydrostatic test prior to delivery of the apparatus.

18.13.7.2 The test shall be conducted as follows:

(1) The pump and its connected piping system shall be hydrostatically tested to a gauge pressure of 250 psi (1700 kPa).
(2) The hydrostatic test shall be conducted with the tank fill line valve, the bypass line valve if so equipped, and the tank-to-pump valve closed.
(3) All discharge valves shall be open and the outlets capped.
(4) All intake valves shall be closed, and nonvalved intakes shall be capped.
(5) This pressure shall be maintained for 3 minutes.

Chapter 19 Water Tanks

19.1 Application. If the fire apparatus is equipped with a water tank, the provisions of this chapter shall apply.

19.2 Tank Construction.

19.2.1 All water tanks shall be constructed of noncorrosive material or other materials that are protected against corrosion and deterioration.

19.2.2* The water tanks shall have a means to permit cleaning of the tank.

19.2.3* If the water tank is independent of the body and compartments, it shall be equipped with a method for lifting the tank(s) off of the chassis.

19.2.4 Tanks shall be cradled, cushioned, spring-mounted, or otherwise protected from undue stress resulting from travel on uneven terrain, in accordance with the tank manufacturer's requirements.

19.2.5* All water tanks shall be provided with baffles or swash partitions to form a containment or dynamic method of water movement control.

19.2.5.1 If a containment method of baffling is used, a minimum of two transverse or longitudinal vertical baffles shall be provided.

19.2.5.1.1 There shall be a maximum distance of 48 in. (1220 mm) between any combination of tank vertical walls and baffles.

19.2.5.1.2 Each baffle shall cover at least 75 percent of the area of the plane that contains the baffle.

Copyright National Fire Protection Association
Provided by IHS under license with NFPA
No reproduction or networking permitted without license from IHS
Not for Resale

19.2.5.2 If a dynamic method of partitioning is used, the tank shall contain vertical transverse and longitudinal partitions.

19.2.5.2.1 The vertical partitions shall be secured to the top and bottom of the tank.

19.2.5.2.2 The longitudinal partitions shall extend a minimum of 75 percent of the tank length.

19.2.5.2.3 The partitions shall be arranged in such a manner that the vertical plane of each partition shall create cells for which no dimension shall exceed 48 in. (1220 mm).

19.2.6 Cleanout Sumps.

19.2.6.1 One or more cleanout sumps shall be provided.

19.2.6.2 A 3 in. (75 mm) or larger removable pipe plug shall be furnished in each sump.

19.2.6.3 If the sump is used for the tank-to-pump line connection, the design shall prevent sludge or debris in the sump from entering the pump.

19.2.7 Water Level Indicator.

19.2.7.1 An indicator shall be provided that shows the level or amount of water in the tank(s).

19.2.7.2 If the apparatus is not equipped with a pump, the indicator shall be visible at the inlet valve position.

19.3 Tank-to-Pump Intake Line.

19.3.1 If the apparatus is equipped with a pump, the water tank shall be connected to the intake side of the pump with a valve controlled at the pump operator's position.

19.3.2 Tank-to-Pump Flow Rate.

19.3.2.1 If the water tank has a certified capacity of less than 500 gal (2000 L), the piping and valve arrangement shall be capable of delivering water to the pump at a minimum rate of 250 gpm (1000 L/min).

19.3.2.2 If the water tank has a certified capacity of 500 gal (2000 L) or greater, the piping and valve arrangement shall be capable of delivering water to the pump at a minimum rate of 500 gpm (2000 L/min) or the rated capacity of the pump, whichever is less.

19.3.2.3 The flow required by 19.3.2.1 and 19.3.2.2 shall be sustainable while pumping a minimum of 80 percent of the certified tank capacity with the apparatus on level ground.

19.3.3* An automatic means shall be provided in the tank-to-pump line that prevents unintentional backfilling of the water tank through that line.

19.3.4 Connections or outlets from the tank(s) to the pump shall be designed to prevent air from being entrained while pumping water from the tank.

19.4 Filling and Venting.

19.4.1* Fill Opening. A convenient covered fill opening designed to prevent spillage shall be provided.

19.4.1.1 The fill opening shall be designed to allow the insertion of a 2½ in. (65 mm) hose with coupling.

19.4.1.2 The cover shall be marked with a label that reads "Water Fill."

19.4.1.3 A screen that is easily removed and cleaned shall be installed in the opening.

19.4.1.4* The cover or another device shall open as a vent to release pressure buildup in the tank.

19.4.2 Vent/Overflow Outlet.

19.4.2.1 A vent/overflow outlet that is sized to allow water to be drawn from the tank at a rate at least equal to that required in 19.3.2 shall be provided.

19.4.2.2* The vent/overflow outlet shall be designed to direct any water to behind the rear axle so as not to interfere with rear tire traction.

19.4.3 Tank Fill Line. If the apparatus is equipped with a pump, a valved tank fill line shall be provided.

19.4.3.1* Where the water tank has a capacity of 1000 gal (4000 L) or less, the tank fill line shall be at least 1 in. (25 mm) nominal inside diameter.

19.4.3.2* Where the water tank has a capacity greater than 1000 gal (4000 L), the fill line shall be at least 2 in. (52 mm) nominal inside diameter.

19.4.3.3* The valve shall be capable of regulating flow and shall be controllable from the pump operator's position.

19.5 Mobile Water Supply Apparatus. If the apparatus is designed to be a mobile water supply apparatus, the requirements of this section shall apply.

19.5.1 External Fill. An external fill connection leading directly to the tank shall be provided.

19.5.1.1* The external fill connection shall permit a minimum filling rate of 1000 gpm (4000 L/min) from sources external to the unit.

19.5.1.2 The external fill connection shall be provided with a removable or accessible strainer, a shutoff valve capable of being throttled, a minimum 30-degree sweep elbow positioned downward, and a closure cap or plug.

19.5.1.3 Any 3 in. (75 mm) or larger valve shall be a slow-operating valve.

19.5.1.4 A check-type device shall be permitted to be substituted for the modulating and slow-operating valve in those operations where the flow rate is to be controlled at the source.

19.5.2* Water Transfer. Single or multiple tank connections that meet the requirements of 19.5.2.1 and 19.5.2.2 shall be provided.

19.5.2.1 The tank connection(s) shall be capable of allowing water to be transferred from the tank to an external use to the right, left, and rear of the fire apparatus.

19.5.2.2* Each tank connection shall be capable of emptying 90 percent of the tank capacity at a minimum average rate of 1000 gpm (4000 L/min) with the apparatus on level ground.

19.6 Water Tank Capacity Certification.

19.6.1* The manufacturer shall certify the capacity of the water tank prior to delivery of the apparatus.

19.6.2 The certified capacity shall be recorded on the manufacturer's record of construction *(see 4.19.1)*, and the certification shall be provided to the purchaser when the apparatus is delivered.

Copyright National Fire Protection Association
Provided by IHS under license with NFPA
No reproduction or networking permitted without license from IHS
Not for Resale

Chapter 20 Aerial Devices

20.1* General Requirements.

20.1.1 If the apparatus is equipped with an aerial ladder, the aerial device and apparatus shall meet the requirements of Sections 20.2 through 20.6 and Sections 20.17 through 20.25.

20.1.2 If the apparatus is equipped with an elevating platform, the aerial device and apparatus shall meet the requirements of Sections 20.7 through 20.12 and Sections 20.17 through 20.25.

20.1.3 If the apparatus is equipped with a water tower, the aerial device and apparatus shall meet the requirements of Sections 20.13 through 20.25.

20.2 Aerial Ladder Requirements.

20.2.1 The aerial ladder shall consist of two or more ladder sections that, together with the steps and platforms on the apparatus body, provide continuous egress for fire fighters and civilians from an elevated position to the ground.

20.2.2 The rated vertical height of an aerial ladder shall be at least 50 ft (15 m) and shall be measured in a vertical plane with the ladder at maximum elevation and extension from the outermost rung of the outermost fly section to the ground.

20.2.3 The rated horizontal reach of an aerial ladder shall be measured in a horizontal plane from the centerline of the turntable rotation to the outermost rung on the outermost fly section with the aerial ladder extended to its maximum horizontal reach.

20.2.4 Height and reach dimensions shall be taken with the aerial ladder mounted on a chassis meeting the aerial manufacturer's minimum recommended fire apparatus specifications, with the fire apparatus on level ground, and with the stabilizers deployed in accordance with the manufacturer's instructions.

20.2.5 The ladder rungs shall be equally spaced on a maximum 14 in. (350 mm) centers and minimum 11.75 in. (300 mm) centers and shall have a skid-resistant surface or covering.

20.2.5.1 Where covering is provided, it shall not twist and shall cover at least 60 percent of the length of each rung.

20.2.5.2 Where round rungs are furnished, the rungs shall have a minimum outside diameter of 1¼ in. (32 mm), including the skid-resistant surface or covering.

20.2.5.3 Where rungs other than round are furnished, they shall have a cross-sectional area not less than 1.2 in.^{2} (775 mm^2); a maximum outside dimension of the cross-sectional area (height or width) of 3.2 in. (81 mm), including the skid-resistant surface or covering; and a minimum outside dimension of ¾ in. (19 mm), including the skid-resistant surface or covering.

20.2.5.4 The minimum design load for each rung shall be 500 lb (227 kg) distributed over a 3½ in. (89 mm) wide area at the center of the length of the rung with the rung oriented in its weakest position.

20.2.6 There shall be a minimum of 18 in. (460 mm) in width inside the aerial ladder between the rails measured at the narrowest point, excluding any mounted equipment.

20.2.7 Obstructions Below the Ladder.

20.2.7.1 Where a solid obstruction below the ladder is wider than 12 in. (300 mm), a minimum clearance of 7 in. (180 mm) between the centerline of the rung and the obstruction shall be provided.

20.2.7.2 Where the solid obstruction below the centerline of the ladder is 12 in. (300 mm) or less in width, the standoff between the centerline of the rung and the obstruction shall be permitted to be less than 7 in. (180 mm), provided there is at least 6 in. (150 mm) of rung width and 7 in. (180 mm) of depth below the centerline of the rung on each side of the obstruction.

20.2.8 Top rails shall be provided on the ladder, shall have a minimum width of 1 in. (25 mm), and shall be at a minimum height of 12 in. (300 mm) above the centerline of the rungs, excluding the outermost two rungs of the outermost fly section.

20.2.9 Two folding steps with surfaces that meet the skid-resistant requirements of 15.7.3 shall be provided on the ladder for use by the ladder pipe–monitor operator.

20.2.9.1 Each folding step shall have a minimum design load of 500 lb (227 kg) and shall be a minimum of 35 in.^{2} (22,500 mm^2) in area.

20.2.9.2 A single step that has a minimum design load of 500 lb (227 kg) and a minimum area of 100 in.^{2} (65,000 mm^2) shall be permitted to be used in place of the two steps.

20.2.10 Provisions shall be made so that the personnel working on the ladder can attach fall protection harnesses.

20.2.11 The apparatus shall be equipped with steps that meet the skid resistance requirements of 15.7.3 or with rungs that provide a path at any degree of elevation from the bottom rung of the aerial ladder to the ground.

20.2.11.1 Steps, with the exception of the ground to the first step, shall be spaced on no more than 18 in. (460 mm) centers.

20.2.11.2 Handrails shall be provided within reach at each step location.

20.2.12 With the stabilizers set, the aerial ladder shall be capable of being raised from the bedded position to maximum elevation and extension and rotated 90 degrees.

20.2.12.1 Two or more of these functions shall be permitted to be performed simultaneously.

20.2.12.2 The functions described in 20.2.12 shall be accomplished within 120 seconds if the aerial ladder has a rated vertical height of 110 ft (34 m) or less.

20.2.12.3 The functions described in 20.2.12 shall be accomplished within 180 seconds if the aerial ladder has a rated vertical height over 110 ft (34 m).

20.2.13* Where a breathing air system is provided, it shall supply breathing air for a minimum of one person at the secondary aerial ladder operator's position and shall meet the requirements of 20.2.13.1 through 20.2.13.7.

20.2.13.1 The system shall include storage for at least 200 ft^3 (5.6 m^3) of breathing air and shall meet the requirements of Section 25.5.

20.2.13.2 Piping System.

20.2.13.2.1 All components of the piping system shall be designed for a pressure rating of three times the working pressure that they are expected to carry.

20.2.13.2.2 The piping system shall be arranged with a high pressure regulator at the air supply that shall limit the air pressure in the piping up the aerial device to the pressure required to supply 125 psi (862 kPa) at the outlet point.

Copyright National Fire Protection Association
Provided by IHS under license with NFPA
No reproduction or networking permitted without license from IHS
Not for Resale

20.2.13.2.3 All piping, valves, and components shall be fabricated of corrosion-resistant materials and shall be sized for the number of outlets provided at the secondary aerial ladder operator's position.

20.2.13.2.4 A pressure relief valve set to relieve the pressure at 1½ times the working pressure of the piping system in the event of regulator failure shall be provided on the downstream side of the high pressure regulator.

20.2.13.3 Damage Prevention.

20.2.13.3.1 All valves, pressure regulators, and gauges shall be protected from accidental damage.

20.2.13.3.2 The piping or hose system between the air cylinder(s) and the secondary aerial ladder operator's position shall be installed so as to prevent damage due to abrasion, bending, pinching, or exposure to excessive heat.

20.2.13.4 Holders shall be provided for the storage of the breathing air equipment when it is not in use.

20.2.13.5 A low air warning system shall be provided that will monitor the air volume and provide an audible and visual warning at both the upper and lower control stations when the air volume is at or below 20 percent.

20.2.13.6 The quality of the breathing air shall meet the requirements of NFPA 1989, *Standard on Breathing Air Quality for Fire and Emergency Services Respiratory Protection.*

20.2.13.7 All components of the system that the breathing air will be in contact with shall be cleaned of oil, grease, contaminants, and foreign material.

20.3 Aerial Ladder Rated Capacity.

20.3.1 The rated capacity of the aerial ladder shall be a minimum load of 250 lb (114 kg) carried on the outermost rung of the outermost fly section with the aerial ladder placed in the horizontal position at maximum extension.

20.3.1.1 The aerial ladder shall be capable of operating in any position while carrying its rated capacity on the outermost rung of the outermost fly section.

20.3.1.2 If the aerial ladder has a permanently mounted water delivery system, the 250 lb (114 kg) rated capacity shall be determined without water in the system.

20.3.2 The rated capacity of the aerial ladder shall be a minimum load of 250 lb (114 kg) carried on the outermost rung of the outermost fly section with the aerial ladder at 45 degrees to the horizontal and at maximum extension while discharging water at rated capacity through the full range of monitor or nozzle movements as permitted by the aerial manufacturer.

20.3.3 Rated capacities in excess of 250 lb (114 kg) shall be stated in increments of 250 lb (114 kg) and shall be in addition to any fire-fighting equipment installed on the aerial ladder by the manufacturer.

20.3.4* If the aerial ladder is rated in multiple configurations, the manufacturer shall describe these configurations, including the rated capacity of each, in both the operations manual and on a plate at the operator's control station.

20.4 Aerial Ladder Operating Position.

20.4.1 Indicating devices that are lighted and marked with a label shall be visible from the operator's position and shall indicate the following:

(1) That the rungs are aligned for climbing
(2) That the aerial ladder is aligned with the travel bed

20.4.2 A system that is lighted and marked with labels shall be visible from the operator's position to indicate the elevation, extension, and rated capacities.

20.4.3 Voice Communication System.

20.4.3.1* A weather-resistant two-way voice communication system shall be provided between the aerial ladder operator's position and the tip of the ladder.

20.4.3.2 The speaker/microphone at the tip shall allow for hands-free operation.

20.5 Aerial Ladder Operating Mechanisms.

20.5.1 Elevation. A power-operated system for elevating and lowering the aerial ladder under all the rated conditions of loading shall be provided.

20.5.1.1 Where hydraulic components are utilized, they shall meet the requirements of Section 20.19 and shall be designed to prevent damage at the top and bottom limits.

20.5.1.2 An automatic locking device(s) shall be provided so that the desired elevated position can be maintained.

20.5.1.3 A locking device shall be provided that will retain the aerial ladder in the bed when the fire apparatus is in motion.

20.5.2 Rotation. A power-operated turntable shall be provided that will allow continuous rotation in either direction under all the rated conditions of loading.

20.5.2.1* The turntable rotation bearing shall be accessible for lubrication and retorquing of bolts.

20.5.2.2 The turntable rotation mechanism shall be equipped with an automatically applied brake or self-locking drive that provides sufficient braking capacity while all power systems are nonfunctioning to prevent turntable rotation under all rated conditions of loading.

20.5.3 Extension. A power-operated system for extending and retracting the fly section(s) under all the rated conditions of loading shall be provided.

20.5.3.1 Where hydraulic components are utilized, they shall meet the requirements of Section 20.19.

20.5.3.2 An automatic locking device shall be provided so that the desired position of extension can be maintained.

20.5.3.3 Rollers, pulleys, and roller guides shall be equipped with self-lubricating bearings or readily accessible grease fittings.

20.5.3.4 Slide pads, rollers and bearings, when used, shall be readily accessible for replacement.

20.5.3.5 When wire rope or chains are used to extend the ladder sections, the system shall be redundant with a minimum of two wire ropes or chains used per ladder section.

20.5.3.6 A means shall be provided to prevent damage to the extension system at full retraction or full extension.

20.5.4* Secondary Operator's Position. If a secondary aerial ladder operator's position is located at the tip of the outermost fly section, the following shall apply:

(1) The lower control shall override the aerial tip control station.

Copyright National Fire Protection Association
Provided by IHS under license with NFPA
No reproduction or networking permitted without license from IHS
Not for Resale

(2) The lower control station shall have a momentary switch that enables the tip controls when closed and disables the tip controls when opened or released.
(3) The maximum speed of the ladder functions measured at the tip shall be as follows when operated from the tip control station:
   (a) Rotation at 2 ft/sec (0.6 m/sec), when fully extended at 0 degrees elevation
   (b) Elevation and lowering at 1 ft/sec (0.3 m/sec)
   (c) Extension and retraction at 0.5 ft/sec (0.15 m/sec)
(4) The step(s) for the tip operator shall be designed to keep the operator's feet from protruding through the outermost fly section.

20.6 Aerial Ladder Water Delivery System.

20.6.1* Where a prepiped waterway is provided, the waterway system shall be capable of flowing 1000 gpm (4000 L/min) at 100 psi (700 kPa) nozzle pressure at full elevation and extension.

20.6.1.1 For ladders with a rated vertical height of 110 ft (34 m) or less, the friction loss (total system loss less head loss) between the monitor outlet and a point below the waterway swivel shall not exceed 100 psi (700 kPa) at 1000 gpm (4000 L/min) flow with the ladder at full horizontal extension.

20.6.1.2 A preset relief valve that is capable of protecting the waterway system by relieving pressure through the dumping of water to the environment shall be provided.

20.6.1.2.1 Such dumping shall be through a system of piping terminating in an area away from the operator's position.

20.6.1.2.2 The discharge end of the piping shall not have a threaded connection.

20.6.1.3 A permanently attached monitor shall be provided.

20.6.1.3.1 The monitor shall be capable of swiveling at least 135 degrees from a line parallel to the ladder and down.

20.6.1.3.2 The monitor shall be capable of horizontal traverse at least 45 degrees from each side of center.

20.6.1.3.3 Positive stops shall be provided to prevent the swivel or traverse of the monitor from exceeding the aerial ladder manufacturer's recommendation.

20.6.1.3.4 If a power-operated monitor is provided, the primary controls shall be at the aerial operator's position, and those controls shall be capable of overriding all other monitor controls.

20.6.1.3.5* A permanently installed monitor/nozzle shall not obstruct access to or from the tip of the ladder.

20.6.1.4 A 1000 gpm (4000 L/min) nozzle shall be furnished.

20.6.1.5* The water system shall be arranged so it can be supplied at ground level through an external inlet that is a minimum of 4 in. (100 mm) in size.

20.6.1.6 If the apparatus is equipped with a fire pump capable of supplying the required flow and pressure, a permanent valved connection shall be provided between the pump and the waterway system.

20.6.1.7 A flowmeter shall be installed in the waterway, with a display on either the pump operator's panel or the aerial ladder operator's control panel.

20.6.1.8* A 1½ in. (38 mm) minimum drain valve shall be provided at the low point of the waterway inlet system.

20.6.1.9 If the apparatus has a fire pump and normal operations are to supply the waterway through the pump, a cap meeting the requirements of 16.7.4 shall be provided on the external inlet.

20.6.2* Where a prepiped waterway is not provided, the following equipment shall be furnished:

(1) Ladder pipe with 1¼ in. (32 mm), 1⅜ in. (35 mm), and 1½ in. (38 mm) tips that can be attached to the aerial ladder
(2) Sufficient length(s) of 3 in. (75 mm) or larger attack hose complying with the requirements of NFPA 1961, *Standard on Fire Hose*, to reach between the installed ladder pipe and the ground with at least 10 ft (3 m) of hose available on the ground with the ladder at full extension
(3) One hose strap for each ladder section
(4) Halyards to control the ladder pipe from ground level

20.6.2.1 A bracket for carrying the detachable ladder pipe shall be provided on the apparatus and shall be designed so that the ladder pipe clamps will not have to be readjusted to secure the pipe to the aerial ladder.

20.6.2.2 The horizontal traverse of the detachable ladder pipe shall not exceed the aerial ladder manufacturer's recommendations.

20.6.2.3 The ladder pipe shall be capable of swiveling 135 degrees from a line parallel to the ladder and down.

20.7 Elevating Platform Requirements.

20.7.1 The elevating platform shall consist of an elevated tower of two or more booms or sections equipped with a passenger-carrying platform(s) assembly.

20.7.2 The rated vertical height of the elevating platform shall be measured in a vertical plane from the top surface of the platform handrail to the ground, with the platform raised to its position of maximum elevation.

20.7.3 The rated horizontal reach of the elevating platform shall be measured in a horizontal plane from the centerline of the turntable rotation to the outer edge of the platform handrail, with the elevating platform extended to its maximum horizontal reach.

20.7.4 Height and reach dimensions shall be measured with the elevating platforms mounted on a chassis meeting the elevating platform manufacturer's minimum recommended fire apparatus specifications, with the fire apparatus on level ground, and with the stabilizers deployed in accordance with the manufacturer's instructions.

20.7.5 Where the rated vertical height of the elevated platform is 110 ft (34 m) or less, the elevating platform, with stabilizers set, shall be capable of being raised from the bedded position to maximum elevation and extension and rotated 90 degrees within 150 seconds. Two or more of these functions shall be permitted to be performed simultaneously.

20.7.6 Platform Construction.

20.7.6.1 The platform shall have a minimum floor area of 14 ft^2 (1.3 m^2).

20.7.6.2 A continuous guard railing, a minimum of 42 in. (1070 mm) high, shall be provided on all sides.

20.7.6.2.1 The railing shall be constructed so there are no horizontal or vertical openings below it greater than 24 in. (610 mm) in either dimension.

Copyright National Fire Protection Association
Provided by IHS under license with NFPA
No reproduction or networking permitted without license from IHS
Not for Resale

20.7.6.2.2 There shall be a minimum of two gates providing access to the platform.

20.7.6.2.3 Each gate shall be provided with a self-engaging latch.

20.7.6.2.4 The use of a vertical opening or inward opening, self-closing gate or door for access to and from the platform shall be permitted to meet the continuous railing requirement.

20.7.6.3 A kick plate of not less than 4 in. (100 mm) high shall be provided around the floor and shall be permitted to swing with the gate.

20.7.6.4 The steps and the floor of the platform shall be provided with skid-resistant surfaces that meet the requirements of 15.7.3.

20.7.6.5 Drain openings shall be provided to prevent water accumulation on the platform floor.

20.7.6.6 Heat Shield.

20.7.6.6.1 A heat-reflective shield shall be provided on the front, sides, and bottom of the platform.

20.7.6.6.2 If necessary, openings for the movement and operation of the water monitor shall be permitted in the front heat shield.

20.7.6.7 Water Curtain System.

20.7.6.7.1 A water curtain system capable of providing a cooling spray under the entire floor of the platform and flowing a minimum of 75 gpm (284 L/min) shall be provided.

20.7.6.7.2 The system shall be controlled by a single, quick-acting valve with an actuator accessible from the platform.

20.7.6.8 Provisions shall be made so that the personnel working on the platform can attach fall protection harnesses.

20.7.7 Where a breathing air system is provided, it shall supply breathing air for a minimum of two persons on the platform and shall meet the requirements of 20.7.7.1 through 20.7.7.7.

20.7.7.1 The system shall include storage for at least 400 ft^3 (11 m^3) of breathing air and shall meet the requirements of Section 25.5.

20.7.7.2 Piping System.

20.7.7.2.1 All components of the piping system shall be designed for a pressure rating of three times the working pressure that they are expected to carry.

20.7.7.2.2 The piping system shall be arranged with a high pressure regulator at the air supply that shall limit the air pressure in the piping up the aerial device to the pressure required to supply 125 psi (862 kPa) at the outlet point.

20.7.7.2.3 All piping, valves, and components shall be fabricated of corrosion-resistant materials and shall be sized for the number of outlets provided in the platform.

20.7.7.2.4 A pressure relief valve set to relieve the pressure at 1½ times the working pressure of the piping system in the event of regulator failure shall be provided on the downstream side of the high pressure regulator.

20.7.7.3 Damage Prevention.

20.7.7.3.1 All valves, pressure regulators, and gauges shall be protected from accidental damage.

20.7.7.3.2 The piping or hose system between the air cylinder(s) and the platform shall be installed so as to prevent damage due to abrasion, bending, pinching, or exposure to excessive heat.

20.7.7.4 Holders shall be provided for the storage of the breathing air equipment when it is not in use.

20.7.7.5 A low air warning system shall be provided that monitors the air volume and provides an audible and visual warning at both the upper and lower control stations when the air volume is at or below 20 percent.

20.7.7.6 The quality of the breathing air shall meet the requirements of NFPA 1989, *Standard on Breathing Air Quality for Fire and Emergency Services Respiratory Protection.*

20.7.7.7 All components of the system that the breathing air will be in contact with shall be cleaned of oil, grease, contaminants, and foreign material.

20.8 Elevating Platform Rated Capacity.

20.8.1 The rated capacity of the elevating platform shall be a minimum of 750 lb (340 kg), with no water in the water delivery system, in any position of operation.

20.8.2 The rated capacity of the elevating platform shall be a minimum of 500 lb (227 kg), with the water delivery system full of water but not discharging, in any position of operation.

20.8.3 The elevating platform shall be capable of delivering a minimum of 1000 gpm (4000 L/min) from the platform with the booms or sections and the monitors and nozzles positioned in any configuration allowed by the manufacturer while carrying a minimum load of 500 lb (227 kg) on the platform.

20.8.4 All rated capacities shall be stated in increments of 250 lb (114 kg) and shall be in addition to any fire-fighting equipment installed on the elevating platform by the manufacturer.

20.8.5 If the elevating platform is rated in multiple configurations, the manufacturer shall describe these configurations, including the rated capacity of each, in the operations manual and on the plates at the operator's control stations.

20.9 Elevating Platform Operating Positions.

20.9.1 There shall be two control stations, one to be known as the platform control station and the other as the lower control station.

20.9.1.1 All operational controls shall be operable from both of these positions.

20.9.1.2 The lower control station shall be located so as to facilitate the operator's observation of the platform while at the controls.

20.9.1.3 The lower station controls shall be capable of overriding the platform station controls.

20.9.2 Voice Communication System.

20.9.2.1* A weather-resistant two-way voice communication system shall be provided between the platform control station and the lower control station.

20.9.2.2 The speaker/microphone at the platform control station shall allow for hands-free operation.

20.10 Elevating Platform Operating Mechanisms.

20.10.1* Power-operated elevating and extending devices designed and powered to allow multiple movements of the elevating platform booms or sections simultaneously under all rated conditions of loading shall be provided.

20.10.1.1 Where hydraulic components are utilized, they shall meet the requirements of Section 20.19.

Copyright National Fire Protection Association
Provided by IHS under license with NFPA
No reproduction or networking permitted without license from IHS
Not for Resale

20.10.1.2 An automatic locking device(s) shall be provided so that the desired elevated position can be maintained.

20.10.1.3 Provisions shall be made to prevent damage at the top and bottom limits of elevation and extension.

20.10.2 An automatic platform-leveling system shall be provided so that the platform, together with its rated load, is supported and maintained level in relation to the turntable or horizontal regardless of the positions of the booms or sections.

20.10.3 A power-operated turntable shall be provided that allows continuous rotation in either direction under all the rated conditions of loading.

20.10.3.1* The turntable rotation bearing shall be accessible for lubrication and retorquing of bolts.

20.10.3.2 The turntable rotation mechanism shall be equipped with an automatically applied brake or self-locking drive that provides sufficient braking capacity while all power systems are nonfunctioning to prevent turntable rotation under all rated conditions of loading.

20.10.4 A locking device shall be provided that will retain the elevating platform booms or sections in the bed when the fire apparatus is in motion.

20.11 Ladders on the Elevating Platform.

20.11.1 If the raising and extending booms or sections incorporate a ladder or ladder sections, the ladder shall meet the requirements of 20.2.1, 20.2.5 through 20.2.8, 20.2.10, 20.2.11, and Section 20.4.

20.11.2 The transition step between the top rung of the ladder and the platform shall not be greater than 18 in. (457 mm).

20.12 Elevating Platform Water Delivery System. On elevating platforms of 110 ft (34 m) or less rated vertical height, a permanent water delivery system shall be installed.

20.12.1 The water delivery system shall be capable of delivering 1000 gpm (4000 L/min) at 100 psi (700 kPa) nozzle pressure with the elevating platform at its rated vertical height.

20.12.2 Friction loss (total system loss less head loss) between the monitor outlet and a point below the waterway swivel shall not exceed 100 psi (700 kPa) at a flow of 1000 gpm (4000 L/min).

20.12.3 One or more permanently installed monitors with nozzles capable of discharging 1000 gpm (4000 L/min) shall be provided on the platform.

20.12.3.1 The monitor(s) shall be supplied by the permanent water system.

20.12.3.2 The monitor(s) shall allow the operator to control the aimed direction of the nozzle through a rotation of at least 45 degrees on either side of center and at least 45 degrees above and below horizontal.

20.12.3.3 The horizontal and vertical traverse of the monitors shall not exceed the elevating platform manufacturer's recommendation.

20.12.3.4* A slow-operating valve shall be provided at the base of any monitor.

20.12.4 If a hose connection is provided, it shall be a minimum 2½ in. (65 mm) nominal diameter valved connection.

20.12.5* The water system shall be arranged so it can be supplied at ground level through an external inlet that is a minimum of 4 in. (100 mm) in size.

20.12.6 If the apparatus is equipped with a fire pump capable of supplying the required flow and pressure, a permanent valved connection shall be provided between the pump and the waterway system.

20.12.7 A flowmeter shall be installed in the waterway with at least one display on the pump operator's panel or at the elevating platform operator's position.

20.12.8 A preset relief valve capable of protecting the waterway system by relieving pressure through the dumping of water to the environment shall be provided.

20.12.8.1 Such dumping shall be through a system of piping terminating in an area away from the operator's position.

20.12.8.2 The discharge end of the piping shall not have a threaded connection.

20.12.9 Waterway Drains.

20.12.9.1* A 1½ in. (38 mm) minimum drain valve shall be provided at the low point of the waterway system.

20.12.9.2 Additional drains shall be provided to drain any portions of the waterway that do not drain to the low point of the system.

20.12.10 If the apparatus has a pump and normal operations are to supply the waterway through the pump, a cap meeting the requirements of 16.7.4 shall be provided on the external inlet.

20.13 Water Tower Requirements.

20.13.1 The water tower shall consist of two or more booms designed to telescope, articulate, or both, and a waterway designed to supply a large capacity elevated water stream.

20.13.2 The rated vertical height of the water tower shall be measured in a vertical plane from the discharge end of the nozzle to the ground, with the nozzle raised to its position of maximum elevation.

20.13.3 The rated horizontal reach of the water tower shall be measured in a horizontal plane from the centerline of the turntable rotation to the end of the nozzle, with the water tower extended to its maximum horizontal reach.

20.13.4 Height and reach dimensions shall be taken with the water tower mounted on a chassis meeting the water tower manufacturer's minimum recommended fire apparatus specifications, the fire apparatus on level ground, and stabilizers deployed in accordance with the manufacturer's instructions.

20.13.5 The water tower, with stabilizers set if required, shall be capable of being raised from the bedded position to maximum elevation and extension and rotated 90 degrees within 105 seconds. Two or more of these functions shall be permitted to be performed simultaneously.

20.14 Water Tower Rated Capacity.

20.14.1 The water tower shall be capable of delivering a minimum water stream of 1000 gpm (4000 L/min) at 100 psi (700 kPa) from the water tower nozzle with the booms or sections and nozzle positioned in any configuration permitted by the manufacturer.

20.14.2 The rated capacity shall include the weight of the charged waterway and the maximum nozzle reaction force.

Copyright National Fire Protection Association
Provided by IHS under license with NFPA
No reproduction or networking permitted without license from IHS
Not for Resale

20.14.3 If the water tower is rated in multiple configurations, the manufacturer shall describe these configurations, including the rated capacity of each, in the operations manual and on the plate at the operator's control station.

20.15 Water Tower Operating Mechanisms.

20.15.1 Power-operated elevating and extending devices shall be provided.

20.15.1.1 They shall be so designed and powered to allow multiple movements of the water tower booms or sections simultaneously under all rated conditions of loading.

20.15.1.2 Where hydraulic components are utilized, they shall meet the requirements of Section 20.19.

20.15.1.3 An automatic locking device(s) shall be provided so that the desired elevated position can be maintained.

20.15.1.4 Provisions shall be made to prevent damage at the top and bottom limits of elevation and extension.

20.15.2 A lock shall be provided that will retain the water tower booms or sections in the bed when the fire apparatus is in motion.

20.15.3 If the water tower has a rated water delivery capacity of 3500 gpm (14,000 L/min) or less, a power-operated turntable shall be provided that will allow continuous rotation in either direction under all the rated conditions of loading.

20.15.3.1* The turntable rotation bearing shall be accessible for lubrication and retorquing of bolts.

20.15.3.2 The turntable rotation mechanism shall be provided with an automatically applied brake or self-locking drive that is capable of preventing turntable rotation under all rated conditions of loading while all power systems are nonfunctioning.

20.16 Water Tower Water Delivery System.

20.16.1 A permanent water system shall be installed capable of delivering 1000 gpm (4000 L/min) at 100 psi (700 kPa) nozzle pressure with the water tower and nozzle positioned in any configuration permitted by the manufacturer.

20.16.2 For water towers with a rated vertical height of 110 ft (33.5 m) or less, the friction loss (total system loss less head loss) between the monitor outlet and a point below the waterway swivel shall not exceed 100 psi (700 kPa) at a flow of 1000 gpm (4000 L/min).

20.16.3 A permanently installed monitor with a nozzle(s) capable of covering a discharge range of at least 300 gpm to 1000 gpm (1100 L/min to 4000 L/min) shall be provided at the top of the water tower and supplied by the permanent water system.

20.16.3.1 The monitor shall be powered so as to allow the operator(s) to control its aimed direction.

20.16.3.2 If the water tower has a rated water delivery capacity of 3500 gpm (14,000 L/min) or less, the monitor, as distinct from the supporting boom, shall allow the operator to control the aimed direction of the nozzle through a rotation of at least 45 degrees either side of center and at least 30 degrees above and 135 degrees below the centerline of the boom.

20.16.3.3 The horizontal and vertical traverse of the monitor shall not exceed the water tower manufacturer's recommendation.

20.16.4 If a variable pattern spray nozzle is provided, a control shall be provided at the operator's position to select the desired stream pattern.

20.16.5* The water system shall be arranged so it can be supplied at ground level through an external inlet that is a minimum of 4 in. (100 mm) in size.

20.16.6 If the apparatus is equipped with a fire pump capable of supplying the required flow and pressure, a permanent valved connection shall be provided between the pump and the waterway system.

20.16.7 A flowmeter shall be installed in the water delivery system with the display on either the pump operator's panel or the water tower operator's control panel.

20.16.8 A preset relief valve capable of protecting the waterway system by relieving pressure through the dumping of water to the environment shall be provided.

20.16.8.1 Such dumping shall be through a system of piping terminating in an area away from the operator's position.

20.16.8.2 The discharge end of the piping shall not have a threaded connection.

20.16.9* A 1½ in. (38 mm) minimum drain valve shall be provided at the low point of the waterway system.

20.16.10 If the apparatus has a pump and normal operations are to supply the waterway through the pump, a cap meeting the requirements of 16.7.4 shall be provided on the external inlet.

20.17 Control Devices.

20.17.1 Controls shall be provided at the driver's position to transfer power to the aerial device.

20.17.2 A visual signal shall be provided at the driver's position to indicate when the operating mechanisms are engaged.

20.17.3 An interlock shall be provided that prevents operation of the aerial device until the parking brakes have been set and the transmission has been placed in neutral or the transmission is in the drive position with the driveline to the rear axle disengaged.

20.17.4 A power-operated governed engine speed control shall be provided to limit the operating speed of the aerial device apparatus engine to within the operating parameters as determined by the manufacturer and this standard.

20.17.4.1 An interlock shall be provided that allows operation of the engine speed control only after the parking brakes have been set and the transmission is in neutral.

20.17.4.2 Where the apparatus is equipped with a fire pump, any high idle speed control shall be automatically disengaged when the fire pump is operating.

20.17.5* An interlock system shall be provided to prevent the following:

(1) Rotation of the aerial device until the stabilizer(s) is in a configuration to meet the stability requirements of Section 20.21
(2) Movement of the stabilizers unless the aerial device is in the travel position

20.17.6 Controls at the operator's position shall be lighted, marked with a label, and conveniently arranged.

Copyright National Fire Protection Association
Provided by IHS under license with NFPA
No reproduction or networking permitted without license from IHS
Not for Resale

20.17.6.1 These controls shall allow the operator to perform the following:

(1) Elevate and lower the aerial device
(2) Extend and retract the aerial device, if applicable
(3) Rotate the aerial device in either direction, if applicable
(4) Operate the intercom, if applicable

20.17.6.2 A method shall be provided to prevent unintentional movement of the aerial device.

20.17.6.3 Each control shall allow the operator to regulate the speed of elevation, extension, and rotation of the aerial device within the limits determined by the manufacturer and this standard.

20.17.6.4 Each control shall be arranged so it can be operated by an operator with a gloved hand without disturbing any other control(s).

20.17.7 Where a three-lever system is used to control the basic functions of the aerial device, the levers shall be distinctively different from the other controls on the panel and arranged adjacent to each other, with the extension control being the left lever, the rotation control being the center lever, and the elevation control being the right lever, as shown in Figure 20.17.7.

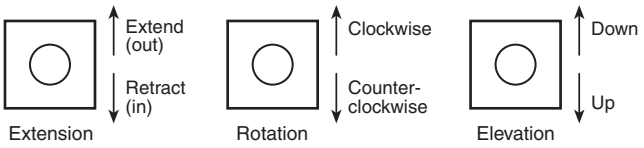

FIGURE 20.17.7 Control Lever Arrangement.

20.17.7.1 The aerial device shall extend when the extension control is pushed up or forward (away from the operator).

20.17.7.2 If the rotation control has a forward/backward orientation or an up/down orientation, the turntable shall rotate clockwise when the rotation control is pushed up or forward (away from the operator). Otherwise, the rotational control handle shall move in the direction of rotation.

20.17.7.3 The aerial device shall lower when the elevation control is pushed up or forward (away from the operator).

20.17.8 Where a multifunction control lever is furnished, it shall move in the direction of the function it controls, where possible.

20.17.9 Where a two-lever system is used, the extension control shall be to the left and a combination lever for rotation and elevation shall be to the right.

20.17.10 All controls regulating the movement of the aerial device shall automatically return to the neutral position upon release by the operator.

20.17.11 When electric over hydraulic aerial device controls are incorporated, a readily accessible, manual means of overriding the electric controls shall be provided.

20.18 Safety.

20.18.1* If the operator's position is on the turntable, the turntable platform shall be provided with a railing at least 42 in. (1070 mm) high.

20.18.1.1 The railing design shall be capable of withstanding a force of 225 lbf (1000 N) applied at any point from any direction without permanent deformation.

20.18.1.2 Where the operator's position is equipped with an operator's seat, the seat shall be provided with a railing or an armrest capable of withstanding a force of 225 lbf (1000 N) applied at any point from the inside of the seat.

20.18.2* Any aerial device operator's position at ground level shall be arranged so that the operator is not in contact with the ground.

20.18.3 A sign(s) shall be placed at any ground level operator's position to warn the operator(s) of electrocution hazards.

20.18.4 Where the aerial device includes moving cylinders or other moving parts, these shall be arranged so as to provide hand clearance, or hand guards shall be provided to prevent injury to the operator.

20.18.5 Lighting shall be provided at the base of the aerial device and shall be arranged to illuminate the aerial device in any position of operation.

20.18.6 A spotlight of not less than 75,000 cp (950,000 lumens) or a floodlight of not less than 850 cp (10,500 lumens) shall be provided on the apparatus by which the operator shall be able to observe the effect of the stream from the ladder pipe or monitor nozzle.

20.18.7 Provisions shall be made so that in the event of failure of the primary operating power source, an auxiliary source of power shall be readily available that is capable of returning the aerial device to the road travel position.

20.18.8 Where the operation of the aerial device is accomplished by hydraulic means, the system shall prevent motion of the aerial device in the event of any hydraulic hose failure.

20.18.9 Where the operation of the aerial device is accomplished by means other than hydraulic, the system shall be designed to prevent motion of the aerial device in the event of a power failure.

20.18.10 All components used to stabilize the apparatus on which the aerial device is mounted shall be designed to prevent instability in the event of a hydraulic hose failure or a power failure.

20.18.11 Where the design of the aerial device incorporates a knuckle, the knuckle shall be as follows:

(1) Equipped with position lights or continuously illuminated by boom lights
(2) Painted with reflective paint or provided with reflective striping

20.19 Hydraulic System.

20.19.1 The nonsealing moving parts of all hydraulic components whose failure results in motion of the aerial device shall have a minimum bursting strength of four times the maximum operating pressure to which the component is subjected.

20.19.1.1 Dynamic sealing parts of all hydraulic components whose failure results in motion of the aerial device shall not begin to extrude or otherwise fail at pressures at or below two times the maximum operating pressure to which the component is subjected.

20.19.1.2 Static sealing parts of all hydraulic components whose failure results in motion of the aerial device shall have a minimum bursting strength of four times the maximum operating pressure to which the component is subjected.

Copyright National Fire Protection Association
Provided by IHS under license with NFPA
No reproduction or networking permitted without license from IHS
Not for Resale

20.19.2 All hydraulic hose, tubing, and fittings shall have a minimum bursting strength of at least three times the maximum operating pressure to which the components are subjected.

20.19.3 All other hydraulic components shall have a minimum bursting strength of at least two times the maximum operating pressure to which the components are subjected.

20.19.4 The hydraulic system shall be provided with an oil pressure gauge at the lower operating position.

20.19.5 Hydraulic Reservoir.

20.19.5.1 A means for checking and filling the hydraulic reservoir shall be readily accessible.

20.19.5.2 The fill location shall be conspicuously marked with a label that reads "Hydraulic Oil Only."

20.19.5.3 The manufacturer shall provide instructions for checking and filling the hydraulic reservoir.

20.19.6 The hydraulic system components shall be capable of maintaining, under all operating conditions, oil cleanliness and temperature that comply with the component manufacturer's recommendations.

20.19.7* The hydraulic system shall have adequate cooling for continuous operation of not less than 2½ hours.

20.19.8 An hourmeter shall be provided that records any time the aerial device hydraulic system is engaged.

20.20 Structure.

20.20.1* All structural load–supporting elements of the aerial device that are made of a ductile material shall have a design stress of not more than 50 percent of the minimum yield strength of the material based on the combination of the rated capacity and the dead load, which is equivalent to a 2:1 safety factor.

20.20.2 All structural load–supporting elements of the aerial device that are made of a nonductile material shall have a design stress of not more than 20 percent of the minimum ultimate strength of the material, based on the combination of the rated capacity and the dead load, which is equivalent to a 5:1 safety factor.

20.20.3 Wire ropes, chains, and attaching systems used to extend and retract the fly sections or booms shall have a 5:1 safety factor based on ultimate strength under all operating conditions allowed by the manufacturer.

20.20.3.1 The factor of safety for the wire rope shall remain above 2:1 during any extension or retraction system stall.

20.20.3.2 The minimum ratio of the diameter of wire rope used to the diameter of the sheave used shall be 1:12.

20.21 Stabilization.

20.21.1* The stability requirements defined in 20.21.2 and 20.21.3 shall be met by the apparatus on which the aerial device is mounted when that apparatus is in a service-ready condition but with all normally removable items such as water, hose, ground ladders, and loose equipment removed.

20.21.1.1 Items mounted on the aerial device by the manufacturer shall remain mounted.

20.21.1.2 Stabilizers shall be provided, if required, to meet the stability requirements of 20.21.2 and 20.21.3.

20.21.2 The aerial device shall be capable of sustaining a static load 1½ times its rated capacity in every position in which the aerial device can be placed when the apparatus is on a firm and level surface.

20.21.3 Sloping Surface.

20.21.3.1 The aerial device shall be capable of sustaining a static load 1⅓ times its rated capacity in every position in which the aerial device can be placed when the apparatus is on a slope of 5 degrees (8.7 percent) downward in the direction most likely to cause overturning.

20.21.3.2 If other capabilities, such as a means of turntable leveling, are provided to minimize the effect of the sloping surface, those capabilities shall be permitted to be utilized for the purpose of determining whether the apparatus meets this stability requirement.

20.21.4 If a stabilizer system is provided, it shall meet the requirements of 20.21.4.1 through 20.21.4.4.

20.21.4.1 If the stabilizer system is power operated, the controls shall be arranged so that the operator can view the stabilizers in motion.

20.21.4.1.1 An audible alarm, of not less than 87 dBA measured at any position the stabilizer can be in, shall sound when a stabilizer is moving.

20.21.4.1.2 An indicator(s) shall be provided to denote when the apparatus is operable within the manufacturer's range of level conditions.

20.21.4.1.3 Where the rated vertical height of the aerial device is 110 ft (34 m) or less, all stabilizers shall be deployed from the stored position to the operating position within 90 seconds.

20.21.4.2 The ground contact area for each stabilizer shall be such that a unit pressure of not greater than 75 psi (500 kPa) will be exerted over the ground contact area when the apparatus is loaded to its maximum in-service weight and the aerial device is carrying its rated capacity in every position permitted by the manufacturer.

20.21.4.2.1 The requirement defined in 20.21.4.2 shall be permitted to be accomplished with stabilizer pads in conjunction with the permanently mounted stabilizer shoes to meet the loading requirement of 75 psi (500 kPa) or less.

20.21.4.2.2 At a minimum, the stabilizer shoe shall be capable of swiveling on an axis parallel to the longitudinal axis of the apparatus.

20.21.4.3 All stabilizers that protrude beyond the body of the apparatus shall be striped or painted with reflective material so as to indicate a hazard or obstruction.

20.21.4.4 All stabilizers that protrude beyond the body of the apparatus shall be provided with one or more red warning lights located either on the stabilizer or in the body panel above the stabilizer visible on the side of the apparatus where the stabilizer is located.

20.22 Quality Control.

20.22.1 The manufacturer and installer shall have in effect a complete and documented quality control program that will ensure complete compliance with the requirements of this standard.

20.22.2 The quality control program shall include 100 percent nondestructive testing of all critical structural components of the aerial device.

Copyright National Fire Protection Association
Provided by IHS under license with NFPA
No reproduction or networking permitted without license from IHS
Not for Resale

20.22.2.1 The manufacturer shall determine the types of nondestructive testing (NDT) to be conducted.

20.22.2.2 The procedures used for NDT shall comply with the applicable standards defined in 20.22.5.

20.22.2.3 All NDT procedures shall be fully documented with respect to the extent of the examination, the method of testing, and the inspection techniques.

20.22.2.4 All testing shall be performed by American Society for Nondestructive Testing (ASNT) Level II NDT technicians or by an ASNT Level I technician under the supervision of an on-site Level II technician, all of whom have been certified in the test methods used in accordance with ASNT CP-189, *Standard for Qualification and Certification of Nondestructive Testing Personnel.*

20.22.3 Welder Certification.

20.22.3.1 Welds for all structural load supporting elements shall be performed by certified welders under the guidelines of AWS D1.1, *Structural Welding Code — Steel;* AWS D1.2, *Structural Welding Code — Aluminum*; and AWS D1.3, *Structural Welding Code — Sheet Steel.*

20.22.3.2 Welding performed by fabricators and welders approved by the Canadian Welding Bureau to Canadian Standards Association (CSA) W47.1, *Standard for Certification of Companies for Fusion Welding of Steel Structures*, or CSA W47.2, *Certification of Companies for Fusion Welding of Aluminum*, shall be considered as equivalent to welding performed according to 20.22.3.1.

20.22.3.3 Welding performed by machines shall be considered equivalent to welding performed by certified welders.

20.22.4 The manufacturer and the installer shall establish applicable welding quality assurance procedures for all weldments.

20.22.4.1 Methods of nondestructive testing shall be described in the manufacturer's quality assurance procedures and shall be as recommended by AWS B1.10, *Guide for the Nondestructive Examination of Welds.*

20.22.4.2 The manufacturer shall designate the welds to be examined, the extent of examination, and the type of testing.

20.22.5 Nondestructive Testing Procedure.

20.22.5.1 All ultrasonic inspections shall be conducted in accordance with the following ASTM standards:

(1) ASTM E 114, *Standard Practice for Ultrasonic Pulse-Echo Straight-Beam Examination by the Contact Method*
(2) ASTM E 797, *Standard Practice for Measuring Thickness by Manual Ultrasonic Pulse-Echo Contact Method*

20.22.5.2 All magnetic particle inspections shall be conducted in accordance with ASTM E 709, *Standard Guide for Magnetic Particle Examination.*

20.22.5.3 All liquid penetrant inspections shall be conducted in accordance with ASTM E 165, *Standard Test Method for Liquid Penetrant Examinations.*

20.22.5.4 All radiographic inspections shall be conducted in accordance with ASTM E 1032, *Standard Test Method for Radiographic Examination of Weldments.*

20.22.5.5 All electrical conductivity measurements shall be conducted in accordance with ASTM E 1004, *Standard Practice for Determining Electrical Conductivity Using the Electromagnetic (Eddy-Current) Method.*

20.22.5.6 All hardness readings shall be conducted in accordance with the following ASTM standards:

(1) ASTM E 6, *Standard Terminology Relating to Methods of Mechanical Testing*
(2) ASTM E 10, *Standard Test Method for Brinell Hardness of Metallic Materials*
(3) ASTM E 18, *Standard Test Methods for Rockwell Hardness and Rockwell Superficial Hardness of Metallic Materials*
(4) ASTM E 92, *Standard Test Method for Vickers Hardness of Metallic Materials*
(5) ASTM B 647, *Standard Test Method for Indentation Hardness of Aluminum Alloys by Means of a Webster Hardness Gage*
(6) ASTM B 648, *Standard Test Method for Indentation Hardness of Aluminum Alloys by Means of a Barcol Impressor*

20.22.5.7 All acoustic emission inspections shall be conducted in accordance with the following ASTM standards:

(1) ASTM E 569, *Standard Practice for Acoustic Emission Monitoring of Structures During Controlled Stimulation*
(2) ASTM E 650, *Standard Guide for Mounting Piezoelectric Acoustic Emission Sensors*

20.23 Instruction Plates and Signs.

20.23.1 Plates and signs that provide operational directions, warnings, and cautions shall be installed in positions visible to the operator(s).

20.23.1.1 Instruction plates shall describe the function and operation of each control.

20.23.1.2 Warning and caution signs shall indicate hazards inherent in the operation of the aerial device, including, but not limited to, the following:

(1) Electrical hazards involved where the aerial device does not provide protection to the personnel from contact with, or in proximity to, an electrically charged conductor
(2) Electrical hazards involved where the aerial device does not provide protection to ground personnel who contact the apparatus when it is in contact with energized electrical conductors
(3) Hazards from stabilizer motion
(4) Hazards that can result from failure to follow manufacturer's operating instructions

20.23.2 Labels shall disclose the following information relative to the aerial device:

(1) Make
(2) Model
(3) Insulated or noninsulated
(4) Serial number
(5) Date of manufacture
(6) Rated capacity
(7) Rated vertical height
(8) Rated horizontal reach
(9) Maximum hydraulic system pressure, if applicable
(10) Hydraulic oil requirements (change quantity and type), if applicable

20.24 Certification Tests. The completed apparatus with the aerial device shall be tested to the criteria defined in this section and the test results certified by an independent third-party certification organization.

20.24.1 The aerial device shall be inspected and tested in accordance with the requirements of NFPA 1914, *Standard for Testing Fire Department Aerial Devices*, including all nondestructive testing, prior to being subjected to the tests defined in 20.24.2 through 20.24.4.

Copyright National Fire Protection Association
Provided by IHS under license with NFPA
No reproduction or networking permitted without license from IHS
Not for Resale

20.24.2 Stability Test.

20.24.2.1 The apparatus that the aerial device is mounted on shall be in a service-ready condition and shall be placed on a firm, level surface.

20.24.2.2 All normally removable items such as water, hose, ground ladders, and loose equipment shall be removed, but items mounted on the aerial device by the manufacturer shall remain mounted.

20.24.2.3 If having the stabilizers extended is part of the configuration, the stabilizers shall be deployed to the point where the interlock system allows operation of the aerial device.

20.24.2.4 A load of 1½ times the rated capacity as specified by the manufacturer shall be suspended from the tip of the aerial ladder or from the platform of the elevating platform when it is in the position of least stability.

20.24.2.5 If the manufacturer specifies a rated capacity while water is flowing, then one times the water load and the worst-case nozzle reaction shall be added to the stability test weights.

20.24.2.6 For a water tower, the stability test shall include the weight of the water in the system and 1½ times the maximum nozzle reaction force when the aerial device is in the position of least stability.

20.24.2.7* The apparatus shall show no signs of instability, and the test shall not cause permanent deformation of any components.

20.24.2.8 The stability shall be further tested as defined in 20.24.2.8.1 through 20.24.2.8.5.

20.24.2.8.1 The apparatus that the aerial device is mounted on shall be placed on a firm surface sloping downward at 5 degrees (8.7 percent grade) in the direction most likely to cause overturning and shall be configured as defined in 20.24.2.2.

20.24.2.8.2 If having the stabilizers extended is part of the configuration, the stabilizers shall be deployed in accordance with the manufacturer's recommendations.

20.24.2.8.3 A load of 1⅓ times the rated capacity shall be suspended from the tip of the aerial ladder or the platform of the elevating platform when it is in the position of least stability.

20.24.2.8.4 For a water tower, the stability test shall include the weight of the water in the system and 1⅓ times the maximum nozzle reaction when it is in the position of least stability.

20.24.2.8.5 The apparatus shall show no signs of instability, and the test shall not cause permanent deformation of any components.

20.24.3 Horizontal Load Test.

20.24.3.1 With the aerial device out of the cradle in the fully extended position at zero degrees elevation, a test load shall be applied in a horizontal direction normal to the centerline of the ladder or boom.

20.24.3.1.1 For aerial devices with a prepiped waterway, a 350 lb (160 kg) test load shall be applied at the tip of the ladder or boom.

20.24.3.1.2 For aerial ladders without a prepiped waterway, a 220 lb (100 kg) test load shall be applied the tip of the ladder or boom.

20.24.3.2 The turntable shall not rotate and the ladder or boom shall not deflect beyond what the manufacturer's specification allows.

20.24.4 Aerial Device Water System Test.

20.24.4.1 If the aerial device is equipped with a permanent water system and has a rated vertical height of 110 ft (34 m) or less, standard model flow test data shall be provided to the purchaser.

20.24.4.2 If the water system has been modified from the standard model configuration, a new flow test shall be conducted to determine that the friction loss in the water system between the base of the swivel and the monitor outlet does not exceed 100 psi (700 kPa) with 1000 gpm (4000 L/min) flowing and with the water system at full extension.

20.24.4.3 A flow test shall be conducted on each vehicle to determine that the water system is capable of flowing 1000 gpm (4000 L/min) at 100 psi (700 kPa) nozzle pressure with the aerial device at full elevation and extension.

20.24.4.3.1 Where the apparatus is equipped with a fire pump designed to supply the water system, the test shall be conducted using the onboard fire pump.

20.24.4.3.2 The intake pressure to the fire pump shall not exceed 20 psi (140 kPa).

20.25* Manufacturer's Predelivery Test. If the aerial device is equipped with a permanent water delivery system, the manufacturer shall, prior to delivery of the apparatus, hydrostatically test the piping for the waterway system, including the monitor, at the maximum operating pressure required to flow 1000 gpm (4000 L/min) at 100 psi (700 kPa) nozzle pressure at maximum elevation and extension.

Chapter 21 Foam Proportioning Systems

21.1* Application. If the fire apparatus is equipped with a foam proportioning system, it shall comply with the applicable sections of this chapter.

21.2* Requirements by Type of Foam Proportioning System.

21.2.1* Eductor System. An eductor foam proportioning system shall meet the requirements of 21.3.1 through 21.3.7, 21.3.9, Sections 21.4 through 21.6, and Sections 21.9 through 21.11.

21.2.2* Self-Educting Master Stream Nozzle. A self-educting master stream nozzle shall meet the requirements of Sections 21.3, 21.4, 21.6, and Sections 21.9 through 21.11.

21.2.3* Intake-Side System. An intake-side foam proportioning system shall meet the requirements of Sections 21.3 through 21.6 and Sections 21.9 through 21.11.

21.2.4* Around-the-Pump System. An around-the-pump foam proportioning system shall meet the requirements of Sections 21.3 through 21.6 and Sections 21.9 through 21.11.

21.2.5* Balanced Pressure System. A balanced pressure foam proportioning system shall meet the requirements of Sections 21.3 through 21.11.

21.2.6* Direct Injection Systems. A direct injection foam proportioning system shall meet the requirements of Sections 21.3 through 21.7 and Sections 21.9 through 21.11.

--`,,```,,,,````-`-`,,`,,`,`,,`---

Copyright National Fire Protection Association
Provided by IHS under license with NFPA
No reproduction or networking permitted without license from IHS
Not for Resale

21.2.7* Water-Powered Direct Injection Foam Proportioning System. A water motor or water turbine foam proportioning system shall meet the requirements of Sections 21.3 through 21.7 and Sections 21.9 through 21.11.

21.3 Design and Performance Requirements of a Foam System.

21.3.1* The proportioning system shall be capable of proportioning foam concentrate(s) in accordance with the foam concentrate manufacturer's recommendations for the type of foam concentrate used in the system over the system's design range of flow and pressures.

21.3.2 The purchaser shall specify the following:

(1) Range of water flows and pressures
(2) Proportioning rates
(3) Types of concentrate(s) (Class A, Class B, etc.)
(4) Brand and viscosity of concentrate

21.3.3 The apparatus shall be capable of supplying the power required by the foam proportioning system in addition to the requirements of the other power-dependent systems installed on the apparatus.

21.3.4* Components that are continuously wetted with foam concentrate shall be constructed of materials that will not be damaged in form, fit, or function when exposed to foam concentrates, including the adverse effects of corrosion, formation of harmful solids, deterioration of gaskets and seals, binding of moving parts, and deterioration of the foam concentrate caused by contact with incompatible materials.

21.3.5 The foam proportioning components that can be flushed with water after use shall be constructed of materials that do not corrode after being flushed with water and allowed to dry. These components shall also be constructed of materials resistant to deterioration by foam concentrates.

21.3.6 The foam concentrate supply line shall not collapse under any operating conditions specified by the manufacturer of the foam proportioning system.

21.3.7 A means shall be provided to prevent water backflow into the foam proportioning system and the foam concentrate storage tank.

21.3.8 A device that consists of a removable element that does not restrict the full flow capacity of the foam supply line shall be provided on the foam concentrate supply side of the foam proportioner to prevent any debris that might affect the operation of the foam proportioning system from entering the system.

21.3.9 Flush Lines.

21.3.9.1 A foam concentrate system flush line(s) shall be provided as required by the foam system manufacturer.

21.3.9.2 A means shall be provided in the flush line(s) to prevent water backflow into the foam concentrate tank or water tank during the flushing operation.

21.3.9.3 Where the foam proportioning system is connected to more than one foam concentrate storage tank, provisions shall be made to flush all common lines to avoid contamination of dissimilar foam concentrates.

21.4 Controls for Foam Systems.

21.4.1* The foam proportioning system operating controls shall be located at the pump operator's panel and shall be identified as required by 21.9.2.

21.4.2 Foam proportioning systems that require flushing after use shall be provided with controls accessible to the operator to completely flush the system with water according to the manufacturer's instructions.

21.4.3 Foam proportioning systems that incorporate foam concentrate metering valves shall have each metering valve calibrated and marked with a plate to indicate the rate(s) of the foam concentrate proportioning available as determined by the design of the system.

21.4.4 Foam proportioning systems that incorporate automatic proportioning features shall be equipped with controls that enable the operator to isolate the automatic feature and operate the system.

21.5 Foam System Pressure-Indicating Devices, Flowmeters, and Indicators.

21.5.1 The displays of all pressure-indicating devices, flowmeters, and other indicators (e.g., fluid-level indicators) shall be located so that they are visible from the pump operator's position and shall meet the requirements of 4.10.3.

21.5.2 If analog pressure gauges are used, they shall meet the requirements of 21.5.2.1 through 21.5.2.4.

21.5.2.1 The gauge shall have a minimum accuracy of Grade B as defined in ASME B40.100, *Pressure Gauges and Gauge Attachments*.

21.5.2.2 Numerals for master gauges shall be a minimum of 5⁄32 in. (4 mm) high.

21.5.2.3 There shall be graduation lines showing at least every 10 psi (70 kPa), with major and intermediate graduation lines emphasized and figures at least every 100 psi (700 kPa).

21.5.2.4 Analog pressure gauges shall be vibration and pressure pulsation dampened; be resistant to corrosion, condensation, and shock; and have internal mechanisms that are factory lubricated for the life of the gauge.

21.5.3 If digital pressure-indicating devices are used, they shall meet the requirements of 21.5.3.1 through 21.5.3.3.

21.5.3.1 The digits shall be at least 0.25 in. (6.4 mm) high.

21.5.3.2 Digital pressure-indicating devices shall display pressure in increments of not more than 10 psi (70 kPa).

21.5.3.3 Digital pressure-indicating devices shall have an accuracy of ±3 percent over the full scale.

21.5.4 Each pressure-indicating device or flowmeter, and its respective display, shall be mounted and attached so it is protected from accidental damage and excessive vibration.

21.5.5 A gauge(s) shall be provided for balanced pressure foam proportioning systems that simultaneously indicates water pressure and foam concentrate pressure.

21.6 Atmospheric Foam Concentrate Tank. If the foam proportioning system incorporates an atmospheric foam concentrate tank, the requirements of 21.6.1 through 21.6.12 shall apply.

21.6.1 The foam concentrate tank(s) shall be constructed of noncorrosive materials or other materials that are protected against corrosion or deterioration and that will not be adversely affected by the foam concentrate to be stored in the tank.

Copyright National Fire Protection Association
Provided by IHS under license with NFPA
No reproduction or networking permitted without license from IHS
Not for Resale

21.6.2 Swash Partitions.

21.6.2.1 All foam concentrate tanks shall be provided with swash partitions arranged such that the maximum dimension perpendicular to the plane of any partition shall not exceed 36 in. (900 mm).

21.6.2.2 The swash partition(s) shall extend from wall to wall and cover at least 75 percent of the area of the plane of the partition.

21.6.3 The foam concentrate tank shall be provided with a fill tower or expansion compartment having a minimum area of 12 in.^{2} (7500 mm^2) and having a volume of not less than 1 percent of the total tank volume.

21.6.3.1 The fill tower opening shall be protected by a completely sealed airtight cover.

21.6.3.2* The cover shall be attached to the fill tower by mechanical means.

21.6.3.3 The fill opening shall incorporate a removable screen with a mesh not to exceed ¼ in. (6 mm) and shall be arranged so that foam concentrate from a 5 gal (19 L) container can be dumped directly to the bottom of the tank to minimize aeration without the use of funnels or other special devices.

21.6.4 The fill tower shall be equipped with a pressure/vacuum vent that enables the tank to compensate for changes in pressure or vacuum when filling or withdrawing foam concentrate from the tank.

21.6.4.1 The pressure/vacuum vent shall not allow atmospheric air to enter the foam tank except during operation or to compensate for thermal fluctuations.

21.6.4.2 The vent shall be protected to prevent foam concentrate from escaping or directly contacting the vent at any time.

21.6.4.3 The vent shall be of sufficient size to prevent tank damage during filling or foam withdrawal.

21.6.5 The foam concentrate tank shall not be equipped with an overflow pipe or any direct opening to the atmosphere.

21.6.6* The foam concentrate tank(s) shall be designed and constructed to facilitate complete interior flushing and cleaning as required.

21.6.7 Tank Drain.

21.6.7.1 A minimum 1 in. (25 mm) inside diameter full flow drain valve and piping shall be provided at the lowest point of any foam concentrate tank.

21.6.7.2 The drain shall be piped to drain directly to the surface beneath the apparatus without contacting other body or chassis components.

21.6.8* The foam concentrate tank shall be constructed and installed to be independent of the apparatus body.

21.6.9 The foam concentrate discharge system design shall prevent the siphoning of foam concentrate.

21.6.10 Labels.

21.6.10.1 A label that reads "Foam Tank Fill" shall be placed at or near any foam concentrate tank fill opening.

21.6.10.2* A label shall be placed at or near any foam concentrate tank fill opening that specifies the type(s) of foam concentrate the system is designed to use, any restrictions on the type(s) of foam concentrate that can be used with the system, and a warning message that reads "Warning: Do Not Mix Brands and Types of Foam."

21.6.11 The foam concentrate tank outlet connection shall be designed and located to prevent aeration of the foam concentrate and shall allow withdrawal of 80 percent of the foam concentrate tank storage capacity under all operating conditions with the apparatus on level ground.

21.6.12 The foam concentrate tank inlet connection, if provided, shall prevent aeration of the foam concentrate under all operating conditions.

21.7* Foam Concentrate Pump. If the foam proportioning system is equipped with a foam concentrate pump, the requirements of 21.7.1 through 21.7.5 shall apply.

21.7.1 The foam concentrate pump shall operate without cavitation when delivering maximum rated flow.

21.7.2* The materials of construction for the foam concentrate pump shall be corrosion resistant and compatible with the type of foam concentrate(s) listed on the plate required in 21.9.3.

21.7.3 Drivetrain components that transmit power to the foam concentrate pump shall be in accordance with the apparatus manufacturer's design performance provided on the plate required in 21.9.3.

21.7.4 A means to relieve excess pressure in the foam concentrate pumping system shall be provided to protect the foam concentrate pump from damage.

21.7.5* Foam concentrate pumps that are intended to be supplied from an external source of foam concentrate shall be provided with an external valved intake and discharge connection.

21.8 Pressure Vessel Foam Concentrate or Foam Solution Tanks. If the foam proportioning system incorporates a pressure vessel foam concentrate tank, or the foam solution is contained in a pressure vessel, the requirements of 21.8.1 through 21.8.8 shall apply.

21.8.1 If the tank is charged with a compressed gas or a pressurized liquid, and it falls within the scope of the ASME *Boiler and Pressure Vessel Code*, Section VIII, Division 1, it shall be designed, fabricated, and stamped in accordance with the requirements of the ASME *Boiler and Pressure Vessel Code*, Section VIII, Division 1, for the rated pressure.

21.8.2 Foam proportioning system piping and components shall be designed to withstand a minimum of 1½ times the maximum working pressure of the pressure vessel and shall be tested to the working pressure of the pressure vessel after installation.

21.8.3 The pressure vessel tank shall be protected against corrosion from the foam concentrate or water stored in the tank.

21.8.4 If the tank is equipped with a gravity fill (has a fill cap), the fill opening shall be a minimum 2 in. (52 mm) inside diameter.

21.8.4.1 The fill cap shall be equipped with nontapered threads and a compressible gasket.

21.8.4.2 Special wrenches or tools required to tighten the fill cap shall be supplied by the manufacturer and shall be mounted adjacent to the fill cap.

21.8.4.3 A safety vent hole shall be located in the fill cap so that it vents the tank pressure while at least 3½ threads remain engaged.

Copyright National Fire Protection Association
Provided by IHS under license with NFPA
No reproduction or networking permitted without license from IHS
Not for Resale

21.8.5 A minimum ½ in. (13 mm), manually operated, valved vent shall be provided on all pressure vessel tanks.

21.8.6 If the pressure vessel is charged with a compressed gas or a pressurized liquid, a relief valve that meets the applicable requirements of the ASME *Boiler and Pressure Vessel Code*, Section VIII, Division 1, shall be installed on the pressure vessel and set to prevent the vessel pressure from exceeding 110 percent of the maximum allowable working pressure.

21.8.7 A minimum 1 in. (25 mm) inside diameter full flow drain valve and piping shall be provided on all pressure vessel tanks.

21.8.8 A device indicating the internal pressure of the pressure vessel shall be located at the operator's position.

21.9 Labels, Plates, and Instructions.

21.9.1 An instruction plate shall be provided for the foam proportioning system that includes, at a minimum, a piping schematic of the system and basic operating instructions.

21.9.2 Each control, gauge, and indicator necessary to operate the foam proportioning system shall be marked with a label as to its function.

21.9.3* A plate, located at the operator's position, shall provide the following information pertaining to the operating specifications of the foam proportioning system:

(1) Foam classification type (Class A, Class B, or Class A and B)
(2)*Types of foam concentrate(s) compatible with system design *(See operating manual.)*
(3) Proportioning rate (percentage)
(4) Maximum/minimum water flows (gpm)
(5) Maximum/minimum operating pressures

21.9.4 Operations and Maintenance Manual.

21.9.4.1 Two copies of an operations and maintenance manual shall be provided.

21.9.4.2 The manual shall include a complete diagram of the system, together with operating instructions, system foam concentrate capabilities, original system calibration, and details outlining all recommended maintenance procedures.

21.10* Foam Proportioning System Accuracy. The foam proportioning system shall be accurate throughout the manufacturer's stated range of flow(s) and pressure(s).

21.10.1 Systems designed to produce foam solution at ratios of less than 1 percent shall proportion foam concentrate to an accuracy of –0/+40 percent.

21.10.2 Systems designed to produce foam solution at ratios of 1 percent or greater shall proportion foam concentrate to an accuracy of –0/+30 percent or 1 percentage point, whichever is less.

21.11 Certification and Documentation.

21.11.1 The final installer shall certify the following:

(1) The foam system, as installed, complies with the foam equipment manufacturer's installation recommendations.
(2) The foam system has been calibrated and tested to meet the foam equipment manufacturer's and the purchaser's performance specifications.
(3)*The accuracy of the foam proportioning system meets the requirements of 21.10.

21.11.2 Testing and certification documentation shall be provided on delivery of the apparatus.

Chapter 22 Compressed Air Foam Systems

22.1* Application. If the fire apparatus is equipped with a compressed air foam system (CAFS), it shall comply with the applicable sections of this chapter.

22.2 General Requirements.

22.2.1* A foam proportioning system shall be used and shall comply with the applicable requirements of Chapter 21.

22.2.2 The total CAFS rating shall be expressed in terms of air and water flow.

22.2.2.1 The airflow shall be expressed in standard cubic feet per minute (SCFM) [standard cubic meters per minute (SCMM)] and shall be based on the continuous flow capacity of the compressed air source(s) at a minimum gauge pressure of 125 psi (862 kPa).

22.2.2.2 The water flow shall be expressed in gallons per minute (gpm) [liters per minute (L/min)] at a gauge pressure of 125 psi (862 kPa).

22.2.3 The apparatus shall be capable of supplying power for operating the CAFS at its rated capacity while simultaneously providing power to all other power-dependent systems installed on the apparatus.

22.2.4* On a CAFS, the water pump and air pressures shall be automatically balanced within ±10 percent up to the rated pressure of the air compressor.

22.2.5* A means shall be provided on the CAFS for the operator to relieve all pressure from the system after the system has been deactivated.

22.3 Compressed Air Source.

22.3.1 The compressed air source operating in clean environmental conditions shall be designed to provide a continuous rated air supply for a duration of 6 hours without needing adjustment, additional lubrication, or air filters changed.

22.3.2 Relief Valve.

22.3.2.1 The compressed air system shall be equipped with a relief valve that is set to prevent the compressed air system from exceeding 110 percent of the maximum allowable working pressure of the system.

22.3.2.2 The outlet of the relief valve shall be routed to an area that does not expose personnel to air blasts or cause the creation of dust.

22.3.3 If the possibility exists for moisture to build up in the compressed air system, the system shall be equipped with moisture traps and drains.

22.3.4 If a holding, surge, or separator tank (DOT tank or ASME pressure vessel) is provided, it shall comply with 29 CFR 1910.169, "Air receivers," or equal for the rated pressure.

22.3.4.1 Transportable air tanks shall comply with 49 CFR 178.37, "Specification 3AA and 3AAX, seamless steel cylinders," or 29 CFR 1910.169, "Air receivers."

22.3.4.2 Relief valves on transportable air tanks shall be of the ASME type on ASME cylinders and of the DOT type on DOT cylinders or equal for the rated pressure.

Copyright National Fire Protection Association
Provided by IHS under license with NFPA
No reproduction or networking permitted without license from IHS
Not for Resale

22.3.4.3 Valves installed on air tanks shall meet the requirements of the Compressed Gas Association or equivalent standards regarding pressure and usage with compressed air.

22.3.4.4 If the installation utilizes cylinders that require periodic testing, a label shall be placed on the operator's panel indicating the test date stamped on the cylinders and the date the cylinders will next require testing.

22.4* Air Mixing.

22.4.1 An automatic means shall be provided to prevent the backflow of water or foam solution into the compressed air source, air into the water pump, and both water and air into the foam proportioning equipment.

22.4.2 A means of mixing air and foam solution that provides for a homogeneous mixture of compressed air and foam solution shall be provided on the CAFS.

22.5* Compressed Air System Piping. The discharge plumbing shall be configured to minimize the use of elbows or abrupt turns.

22.6 Air Source Controls.

22.6.1 All compressed air source controls shall be located at the pump operator's panel and shall be identified with a plate in accordance with the requirements of 22.8.1.

22.6.2 Compressed air systems that require flushing after use shall be provided with controls that are accessible to the operator and enable the operator to completely flush the system with water according to the manufacturer's instructions.

22.7 Foam System Pressure-Indicating Devices, Flowmeters, and Indicators.

22.7.1 The displays of all pressure-indicating devices, flowmeters, and indicators (e.g., fluid level indicators) shall be located so they are visible from the pump operator's position and shall meet the requirements of 4.10.3.

22.7.2 If analog pressure gauges are used, they shall meet the requirements of 22.7.2.1 through 22.7.2.4.

22.7.2.1 The analog pressure gauge shall have a minimum accuracy of Grade B as defined in ASME B40.100, *Pressure Gauges and Gauge Attachments*.

22.7.2.2 Numerals for master gauges shall be a minimum of 5⁄32 in. (4 mm) high.

22.7.2.3 There shall be graduation lines showing at least every 10 psi (70 kPa), with major and intermediate graduation lines emphasized and figures at least every 100 psi (700 kPa).

22.7.2.4 Analog pressure gauges shall be vibration and pressure pulsation dampened; be resistant to corrosion, condensation, and shock; and have internal mechanisms that are factory lubricated for the life of the gauge.

22.7.3 If digital pressure indicating-devices are used, they shall meet the requirements of 22.7.3.1 through 22.7.3.3.

22.7.3.1 The digits shall be at least 0.25 in. (6.4 mm) high.

22.7.3.2 Digital pressure-indicating devices shall display pressure in increments of not more than 10 psi (70 kPa).

22.7.3.3 Digital pressure-indicating devices shall have an accuracy of ±3 percent over the full scale.

22.7.4 Each pressure-indicating device and flowmeter, and its respective display, shall be mounted and attached so it is protected from accidental damage and excessive vibration.

22.7.5 If flowmeters are provided, they shall meet the requirements of 22.7.5.1 and 22.7.5.2.

22.7.5.1 Flowmeter displays shall be located at the pump operator's panel and shall indicate the airflow in standard cubic feet per minute (SCFM) [standard cubic meters per minute (SCMM)] and indicate the water flow in gallons per minute (gpm) [liters per minute (L/min)].

22.7.5.2 Flowmeters shall be rated to a hydrostatic burst gauge pressure of 500 psi (3400 kPa) if located on the pressure side of the system.

22.7.6* A pressure-indicating device shall be provided for the compressed air source.

22.8 Labels, Plates, and Instruction Plates.

22.8.1 A plate indicating the identification, function, and operation shall be provided for each control, gauge, and indicator required to operate the compressed air foam system.

22.8.2 A label shall be provided at the pump operator's panel that gives the rated continuous flow capacity of the compressed air source at a gauge pressure of 125 psi (862 kPa).

22.8.3 An instruction plate shall be provided at the pump operator's panel that states the following:

(1) "Open and close valves slowly."
(2) "Do not run with just air/water."
(3) "Shut off air when foam tank is empty."
(4) "Be prepared for high nozzle reactions — open nozzle slowly."

22.8.4 Operations and Maintenance Manual.

22.8.4.1 Two copies of an operations and maintenance manual shall be provided.

22.8.4.2 The manual shall include a complete diagram of the system together with operating instructions, the system rating and details outlining all recommended maintenance procedures.

22.9* Manufacturer's Predelivery Tests. The manufacturer shall conduct the following tests prior to delivery of the apparatus.

22.9.1 CAFS Capacity Rating Test.

22.9.1.1 The operation of the water pump and the compressed air source shall be tested simultaneously to determine the integrity of the system and to ensure that the power available is capable of operating these components of the CAFS simultaneously.

22.9.1.1.1 The compressed air source shall be operated at its flow capacity at a minimum gauge pressure of 125 psi (862 kPa), and the water pump shall discharge a minimum of 2 gpm (7.6 L/min) of water at 125 psi (862 kPa) net pump pressure for every 1 SCFM (0.028 SCMM) of compressed air discharge.

22.9.1.1.2 The discharge shall be through at least two separate discharge openings, one discharging air only and the other discharging water only.

22.9.1.2 One or more lines of fire hose of sufficient diameter shall be provided to allow discharge of the required amount of water from the pump to a nozzle or other flow-measuring equipment without exceeding a flow velocity of 35 ft/sec (10.7 m/sec) [approximately 500 gpm (2000 L/min) for 2½ in. (65 mm) hose].

Copyright National Fire Protection Association
Provided by IHS under license with NFPA
No reproduction or networking permitted without license from IHS
Not for Resale

22.9.1.2.1 The discharge shall be measured using a smooth-bore nozzle and pilot tube or other equipment such as flowmeters, volumetric tanks, or weigh tanks.

22.9.1.2.2 Test gauges shall meet the requirements of 16.13.2.2.4 and 16.13.2.2.5.

22.9.1.3 The airflow rate shall be measured using a pressure and temperature compensated flow-measuring device.

22.9.1.3.1 The airflow shall be measured in SCFM (SCMM) at a minimum gauge pressure of 125 psi (862 kPa).

22.9.1.3.2 The airflow-measuring device shall have been calibrated for accuracy within the previous 3 months.

22.9.1.3.3* The air discharge outlet shall have nothing attached directly to it except the test device(s).

22.9.1.4 The water pump and the compressed air source shall be started, and the rated flows and pressures as specified in 22.9.1.1.1 shall be established and maintained.

22.9.1.4.1 The system shall be run for 1 hour.

22.9.1.4.2 Readings of the airflow rate and pressure and the water pump pressure and discharge rate shall be taken at least every 10 minutes.

22.9.1.5 Failure of any component of the CAFS to maintain air and water pressures and discharge volumes at or above the system rating shall constitute failure of the test.

22.9.2* Standby Run Test.

22.9.2.1 One 200 ft (60 m) line of 1½ in. (38 mm) hose shall be connected to the discharge of the CAFS and shall be stretched out on level ground.

22.9.2.2 A quarter-turn valve of the same nominal size as the hose shall be installed at the discharge end.

22.9.2.3 The hose shall be restrained immediately behind the valve at the discharge end to prevent uncontrollable movement when the valve is opened.

22.9.2.4 Operating as a CAFS, with a gauge pressure air output at 125 psi (862 kPa), a foam flow shall be established in the hose line.

22.9.2.5 With the water tank at the half-full level, the valve at the discharge end of the hose shall be shut no faster than in 3 seconds and no slower than in 10 seconds.

22.9.2.6 The engine(s) speed shall be maintained for 10 minutes without discharging water, air, or foam solution from the CAFS and without operator intervention.

22.9.2.7 A bypass line shall be permitted to be opened temporarily, if needed, to keep the water temperature in the pump within acceptable limits.

22.9.2.8 At the end of 10 minutes, the valve shall be reopened no faster than in 3 seconds and no slower than in 10 seconds.

22.9.2.9 Either damage to the system that affects its rated performance characteristics or the lack of a fire stream immediately upon opening the hose line shall constitute failure of this test.

Chapter 23 Line Voltage Electrical Systems

23.1* Application. Where any part of a line voltage electrical system is provided as a fixed installation, the applicable requirements of this chapter shall apply.

23.2 General Requirements.

23.2.1 Stability.

23.2.1.1 Any fixed line voltage power source producing alternating current (ac) shall produce electric power at 60 Hz ±3 Hz when producing power at all levels between no load and full rated power.

23.2.1.2 Any fixed line voltage power source shall produce electric power at the rated voltage ±10 percent when producing power at all levels between no load and full rated power.

23.2.2 The maximum voltage supplied to portable equipment shall not exceed 275 volts to ground. Higher voltage shall be permitted only when used to operate fixed wired, permanently mounted equipment on the apparatus.

23.2.3 Conformance with *National Electrical Code*®.

23.2.3.1 All components, equipment, and installation procedures shall conform to NFPA 70, *National Electrical Code*, except where superseded by the requirements of this chapter.

23.2.3.2 Where the requirements of this chapter differ from those in the NFPA 70, *National Electrical Code*, the requirements in this chapter shall apply.

23.2.4* When available, line voltage electrical system equipment and materials included on the apparatus shall be listed and used only in the manner for which they have been listed.

23.2.5 All equipment and materials shall be installed in accordance with the manufacturer's instructions.

23.2.6 Location Ratings.

23.2.6.1 Any equipment used in a dry location shall be listed for dry locations.

23.2.6.2 Any equipment used in a wet location shall be listed for wet locations.

23.2.6.3 Any equipment, except a power takeoff driven generator, used in an underbody or underchassis location that is subject to road spray shall be either listed as Type 4 or mounted in an enclosure that is listed as Type 4.

23.2.6.4* If a power takeoff driven generator is located in an underbody or underchassis location, the installation shall include a shield to prevent road spray from splashing directly on the generator.

23.3 Grounding and Bonding.

23.3.1* Grounding. Grounding shall be in accordance with Section 250.34, "Portable and Vehicle-Mounted Generators," of NFPA 70, *National Electrical Code*.

23.3.1.1 Ungrounded systems shall not be used.

23.3.1.2 Only stranded or braided copper conductors shall be used for grounding and bonding.

23.3.1.3 If a supplementary grounding electrode (ground rod) is provided, it shall be provided in accordance with Section 250.62, "Grounding Electrode Conductor Material"; Section 250.118, "Types of Equipment Grounding Conductors"; and Section 250.54, "Supplementary Grounding Electrodes," of NFPA 70.

23.3.1.4 The grounded current-carrying conductor (neutral) shall be insulated from the equipment-grounding conductors and from the equipment enclosures and other grounded parts.

--`,,```,,,,````-`-`,,`,,`,`,,`---

Copyright National Fire Protection Association
Provided by IHS under license with NFPA
No reproduction or networking permitted without license from IHS
Not for Resale

23.3.1.5 The neutral conductor shall be colored white or gray in accordance with Section 200.6, "Means of Identifying Grounded Conductors," of NFPA 70.

23.3.1.6 Any bonding screws, straps, or buses in the distribution panelboard or in other system components between the neutral and equipment-grounding conductor shall be removed and discarded.

23.3.2 Bonding.

23.3.2.1 The neutral conductor of the power source shall be bonded to the vehicle frame.

23.3.2.2 The neutral bonding connection shall occur only at the power source.

23.3.2.3 In addition to the bonding required for the low voltage return current, each body and each driving or crew compartment enclosure shall be bonded to the vehicle frame by a copper conductor.

23.3.2.3.1 The conductor shall have a minimum amperage rating, as defined in Section 310.15, "Ampacities for Conductors Rated 0–2000 Volts," of NFPA 70, of 115 percent of the rated amperage on the power source specification label.

23.3.2.3.2 A single conductor that is sized to meet the low voltage and line voltage requirements shall be permitted to be used.

23.4 Power Source General Requirements. The following requirements shall apply to all line voltage power sources.

23.4.1 All power source system mechanical and electrical components shall be sized to support the continuous duty nameplate rating of the power source.

23.4.2 The power source shall be shielded from contamination that will prevent the power source from operating within its design specifications.

23.4.3* For power sources of 8 kW or larger, the power source manufacturer shall declare the continuous duty rating that the power source can provide when installed on fire apparatus according to the manufacturer's instructions and run at 120°F (49°C) air intake temperature at 2000 ft (600 m) above sea level.

23.4.3.1 The rating on the power source specification label shall not exceed the declared rating from the power source manufacturer.

23.4.4 Access shall be provided to permit both routine maintenance and removal of the power source for major servicing.

23.4.5 The power source shall be located such that neither it nor its mounting brackets interfere with the routine maintenance of the fire apparatus.

23.4.6 Instrumentation.

23.4.6.1 If the power source is rated at less than 3 kW, a "Power On" indicator shall be provided.

23.4.6.2 If the power source is rated at 3 kW or more but less than 8 kW, a voltmeter shall be provided.

23.4.6.3* If the power source is rated at 8 kW or more, the following instrumentation shall be provided at an operator's panel:

(1) Voltmeter
(2) Current meters for each ungrounded leg
(3) Frequency (Hz) meter
(4) Power source hourmeter

23.4.6.4 The instrumentation shall be permanently mounted at an operator's panel.

23.4.6.4.1 The instruments shall be located in a plane facing the operator.

23.4.6.4.2 Gauges, switches, or other instruments on this panel shall each have a label to indicate their function.

23.4.6.4.3 The instruments and other line voltage equipment and controls shall be protected from mechanical damage and not obstructed by tool mounting or equipment storage.

23.4.7 An instruction plate(s) that provides the operator with the essential power source operating instructions, including the power-up and power-down sequence, shall be permanently attached to the apparatus at any point where such operations can take place.

23.4.8* Operation.

23.4.8.1 Provisions shall be made for placing the generator drive system in operation using controls and switches that are identified and within convenient reach of the operator.

23.4.8.2 Where the generator is driven by the chassis engine and engine compression brakes or engine exhaust brakes are furnished, they shall be automatically disengaged for generator operations.

23.4.8.3* Any control device used in the generator system power train between the engine and the generator shall be equipped with a means to prevent unintentional movement of the control device from its set position in the power generation mode.

23.4.9 If there is permanent wiring on the apparatus that is designed to be connected to the power source, a power source specification label that is permanently attached to the apparatus at the operator's control station shall provide the operator with the information detailed in Figure 23.4.9.

Power Source Specifications

Operational Category	Continuous Duty Rating
Rated voltage(s) and type (ac or dc)	
Phase	
Rated frequency	
Rated amperage	
Continuous rated watts	
Power source engine speed	

FIGURE 23.4.9 Power Source Specifications Label.

23.4.10 The power source, at any load, shall not produce a noise level that exceeds 90 dBA in any driving compartment, crew compartment, or onboard command area with windows and doors closed, or at any operator's station on the apparatus.

23.5 Chassis Engine–Driven Generators. Where the generator is driven by the chassis engine, the requirements in 23.5.1 through 23.5.3 shall apply.

23.5.1* Unless the generator is always engaged, a "Generator Engaged" indicator shall be provided in the driving compartment to indicate that the generator shift has been successfully completed.

Copyright National Fire Protection Association
Provided by IHS under license with NFPA
No reproduction or networking permitted without license from IHS
Not for Resale

23.5.2 Unless the generator is always engaged and operating, an "OK to Operate Generator" indicator shall be provided in the driving compartment to indicate that the generator is engaged, transmission is in the proper gear (automatic transmissions only), and the parking brake is engaged (if applicable).

23.5.3 An interlock system shall be provided to prevent advancement of the engine speed in the driving compartment or at any operator's panel unless the transmission is in neutral and the parking brake is engaged, or the apparatus is in the "OK to Pump" or "OK to Operate Generator" mode.

23.6 Additional Power Source Requirements. The requirements in 23.6.1 through 23.6.5.3 are specific to the defined type of line voltage power source.

23.6.1 Direct Drive (PTO) Generators.

23.6.1.1* The generator shall comply with Article 445, "Generators," of NFPA 70, *National Electrical Code*.

23.6.1.2* The main propulsion engine shall have a governor capable of maintaining the engine speed within the limits required by the generator to meet the frequency control specifications.

23.6.1.3 An interlock shall prevent engagement of the generator unless the parking brake is engaged.

23.6.1.4* Where the chassis engine drives the generator and electronic engine throttle controls are provided, an interlock shall prevent engine speed control from any other source while the generator is operating.

23.6.1.5 The transmission's PTO port and PTO, or the split shaft PTO, and all associated drive shaft components shall be rated to support the continuous duty torque requirements of the generator's continuous duty rating as stated on the power source nameplate.

23.6.1.6 A label indicating the chassis transmission shift selector position to be used for generator operation shall be provided in the driving compartment and located so that it can be read from the driver's position.

23.6.1.7 Where the generator is driven by the chassis engine and transmission through a split shaft PTO, the driving compartment speedometer shall register when the generator drive system is engaged.

23.6.1.8 Where the generator is driven by the chassis engine and transmission through a split shaft PTO and chassis transmission retarders are furnished, they shall be automatically disengaged for generator operations.

23.6.1.9 The direct drive generator shall be mounted so that it does not change the ramp breakover angle, angle of departure, or angle of approach as defined by other components, and shall not extend into the ground clearance area.

23.6.1.10 The direct drive generator shall be mounted away from exhaust and muffler areas or provided with a heat shield to reduce operating temperatures in the generator area.

23.6.2 Hydraulically Driven Generators.

23.6.2.1* The generator shall comply with Article 445, "Generators," of NFPA 70, *National Electrical Code*.

23.6.2.2* A means shall be provided to activate the hydraulic generator system.

23.6.2.3 A hydraulic generator system shall operate at all engine speeds, or an automatic engine speed control system shall be provided.

23.6.2.4 If the apparatus is equipped with a fire pump driven by the chassis engine, the generator shall be capable of output at idle as stated on the power source specification label.

23.6.2.5 Hydraulic Components.

23.6.2.5.1 A hydraulic system filter and strainer shall be provided and shall be located in a readily accessible area.

23.6.2.5.2 Hydraulic hose shall meet the hydraulic pump manufacturer's recommendations for pressure, size, vacuum, and abrasion resistance.

23.6.2.5.3* Hydraulic fittings shall meet the hydraulic pump manufacturer's recommendations for pressure, size, and the type of hose used.

23.6.2.5.4* Where the hydraulic hose comes into contact with other surfaces, the hose shall be protected from chafing.

23.6.3* Fixed Auxiliary Engine–Driven Generators.

23.6.3.1 The generator shall comply with Article 445, "Generators," of NFPA 70, *National Electrical Code*.

23.6.3.2* Generators powered by a nonchassis engine shall include the following equipment or shall be installed as follows:

(1) Generators shall be installed so that fumes, vapors, heat, and vibrations do not enter the interior passenger compartment.
(2) Generators shall have the exhaust outlet piped to the exterior and located so that exhaust is directed away from any operator's position.
(3) Generators 8 kW and over shall be equipped with a high temperature automatic shutdown system and low oil automatic shutdown.
(4) Generators shall be installed in accordance with manufacturer's installation requirements for ventilation and service accessibility.
(5) Generators installed in compartments requiring the compartment doors to be open during operation shall be equipped with a compartment door interlock system, or the compartment shall be equipped with a high temperature alarm.
(6) Generators installed in compartments on slide trays and designed for operation in the "slide out" position shall have interlocks to ensure such operation or the compartment shall be equipped with a high temperature alarm.
(7) Permanently installed generators shall have easily accessible engine oil drain provisions or piping to a remote location for oil changing.
(8) Generators located away from or remote from the main operator's area (top of apparatus, over pump, hidden in body, etc.) shall have a remote operating panel with required instrumentation, start and stop controls, and other controls necessary for safe operation.

23.6.3.3 Fuel System.

23.6.3.3.1 Fuel lines shall be protected from chafing at all wear points.

23.6.3.3.2 If the fuel source is shared with the apparatus engine, a separate fuel pickup system shall be provided that is arranged to ensure that the generator cannot utilize more than 75 percent of the fuel tank's capacity.

--`,,```,,,,````-`-`,,`,,`,`,,`---
Copyright National Fire Protection Association
Provided by IHS under license with NFPA
No reproduction or networking permitted without license from IHS
Not for Resale

23.6.3.4 Exhaust System.

23.6.3.4.1* The exhaust piping and discharge shall be located or shielded to prevent thermal damage to the apparatus or equipment.

23.6.3.4.2 Where parts of the exhaust system are exposed so that they can cause injury to operating personnel, protective guards shall be provided.

23.6.3.4.3 Silencing devices shall be provided and shall not create exhaust backpressure that exceeds the limits specified by the engine manufacturer.

23.6.4* Belt-Driven Generators or Dedicated Alternators Supplying an Inverter.

23.6.4.1 A means shall be provided to engage and disengage the generator or alternator.

23.6.4.2 A voltmeter shall be provided at the operator's panel for all sizes of systems of this type.

23.6.4.3 The belt drive system shall be rated to drive the generator or alternator at the nameplate rating.

23.6.5 Line Voltage Systems Derived from Apparatus Low Voltage Power Supply Systems.

23.6.5.1* Where a line voltage power source derives its input energy from the apparatus low voltage electrical system, the system shall be installed in strict compliance with the requirements of Chapter 13.

23.6.5.2 The alternator and/or battery system shall be adequate to provide power to the power source for continuous operation for a minimum of 2 hours at full output.

23.6.5.3 A means that works in coordination with other engine speed controls and interlocks required by this standard shall be provided to advance engine speed to obtain the continuous duty ratings stated on the power source specification label.

23.7* Portable Generator Installations. The generator shall comply with Article 445, "Generators," of NFPA 70, *National Electrical Code*.

23.7.1 Any portable generator that can be operated while mounted on the apparatus shall be as follows:

(1) Installed so that fumes, vapors, heat, excessive noise, and vibrations do not enter interior driving or crew compartments or damage the generator during operation
(2) Have the exhaust outlet located so that exhaust is directed away from any operator station located on the apparatus and guarded to protect the operator

23.7.2 If the portable generator is remotely mounted, it shall have a remote operator's control station that shall provide a means for starting and stopping the generator and monitoring the same instrumentation as is required for fixed power sources.

23.7.3 Wiring for Portable Generator Installations. Wiring installed for the purpose of facilitating the distribution of power from a portable generator installation to fixed wiring on the apparatus shall conform to the additional requirements of 23.7.3.1 through 23.7.3.5.

23.7.3.1 Circuit conductors shall be sized in relation to the power source specification label rating and shall be protected by an overcurrent device commensurate with their amperage capacities.

23.7.3.2 There shall be a single output connector cord with all of the conductors in the cord sized to carry a minimum of 115 percent of the nameplate amperage.

23.7.3.3 If there is not an overcurrent protection device at the power source, the output connector cord shall not exceed 72 in. (1830 mm) in length and shall be connected to an overcurrent protection device.

23.7.3.4 The rating of an external main overcurrent protection device shall equal the rated amperage on the power source specification label or the next larger available size overcurrent protection device where so recommended by the power source manufacturer.

23.7.3.5 If a connecting plug is required, it shall be sized in relation to the system and conform to NEMA configurations for plugs.

23.8 Line Voltage Supplied from an External Source.

23.8.1* If the apparatus is equipped with a fixed power inlet (shoreline inlet), it shall be a permanently mounted inlet (male-recessed type with cover), sized in accordance with the anticipated load, and wired directly to the system or device to be powered or wired to a transfer switch where required by 23.8.2.

23.8.2 Transfer Switch Applications.

23.8.2.1 A transfer switch shall be required to isolate one power source from the other where a circuit(s) is intended to be supplied from more than one power source.

23.8.2.2* Transfer equipment, including transfer switches, shall operate such that all ungrounded conductors of one power source are disconnected before any ungrounded conductors of the second power source are connected.

23.8.3 The apparatus shall have a label permanently affixed at the power inlet that indicates the information shown in Figure 23.8.3.

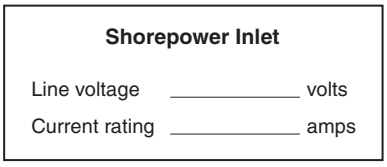

FIGURE 23.8.3 Power Inlet Label.

23.9 Power Supply Assembly.

23.9.1 The conductors used in the power supply assembly between the output terminals of the power source and the main overcurrent protection device shall not exceed 12 ft (4 m) in length.

23.9.2 All power supply assembly conductors, including neutral and grounding conductors, shall have an equivalent amperage rating and shall be sized to carry not less than 115 percent of the amperage of the nameplate current rating of the power source.

23.9.3* If the power supply assembly connects to the vibrating part of a generator (not a connection on the base) the conductors shall be flexible cord or other fine-stranded conductors enclosed in metallic or nonmetallic liquidtight flexible conduit, rated for wet locations and temperatures not less than 194°F (90°C).

Copyright National Fire Protection Association
Provided by IHS under license with NFPA
No reproduction or networking permitted without license from IHS
Not for Resale

23.10 Overcurrent Protection. Manually resettable overcurrent devices shall be installed to protect the line voltage electrical system components.

23.10.1 Power Source Protection. A main overcurrent protection device shall be provided that is either incorporated in the power source or connected to the power source by a power supply assembly.

23.10.1.1 The size of the main overcurrent protection device shall not exceed 100 percent of the rated amperage stated on the power source specification label or the rating of the next larger available size overcurrent protection device, where so recommended by the power source manufacturer.

23.10.1.2 If the main overcurrent protection device is subject to road spray, the unit shall be housed in a Type 4 rated enclosure.

23.10.2 Branch Circuit Overcurrent Protection. Overcurrent protection devices shall be provided for each individual circuit and shall be sized at not less than 15 amps in accordance with Section 240.4, "Protection of Conductors," of NFPA 70, *National Electrical Code*.

23.10.2.1 Any panelboard shall have a main breaker where the panel has six or more individual branch circuits or the power source is rated 8 kW or larger.

23.10.2.2 Each overcurrent protection device shall be marked with a label to identify the function of the circuit it protects.

23.10.2.3 Dedicated circuits shall be provided for any large appliance or device (air conditioning units, large motors, etc.) that requires 60 percent or more of the rated capacity of the circuit to which it is connected, and that circuit shall serve no other purpose.

23.10.3 Panelboards. All fixed power sources shall be hardwired to a permanently mounted panelboard unless one of the following exist:

(1) All line voltage power connections are made through receptacles on the power source and the receptacles are protected by integrated overcurrent devices
(2) Only one circuit is hardwired to the power source, which is protected by an integrated overcurrent device

23.10.3.1 The panel shall be visible and located so that there is unimpeded access to the panelboard controls.

23.10.3.2 All panelboards shall be designed for use in their intended location.

23.10.3.3 The panel(s) shall be protected from mechanical damage, tool mounting, and equipment storage.

23.11* Wiring Methods. Fixed wiring systems shall be limited to the following:

(1) Metallic or nonmetallic liquidtight flexible conduit rated at temperatures not less than 194°F (90°C) with stranded copper wire rated for wet locations and temperatures not less than 194°F (90°C)
(2) Type SOW, SOOW, SEOW, or SEOOW flexible cord, rated at 600 volts and at temperatures not less than 194°F (90°C)

23.11.1 Electrical cord or conduit shall not be attached to chassis suspension components, water or fuel lines, air or air brake lines, fire pump piping, hydraulic lines, exhaust system components, or low voltage wiring and shall be arranged as follows:

(1) Separated by a minimum distance of 12 in. (300 mm) from exhaust piping or shielded from such piping
(2) Separated from fuel lines by a minimum distance of 6 in. (150 mm)

23.11.2 A means shall be provided to allow "flexing" between the driving and crew compartment, the body, and other areas or equipment whose movement would stress the wiring.

23.11.3 Electrical cord or conduit shall be supported within 6 in. (150 mm) of any junction box and at a minimum of every 24 in. (600 mm) of run.

23.11.3.1 Supports shall be made of nonmetallic materials, or corrosion-resistant or corrosion-protected metal.

23.11.3.2 All supports shall be of a design that does not cut or abrade the conduit or cord and shall be mechanically fastened to the apparatus.

23.11.4 Only fittings and components listed for the type of cord or conduit being installed shall be used.

23.11.5 Splices shall be made only in a listed junction box.

23.11.6 Additional Requirements for Flexible Cord Installations.

23.11.6.1* Where flexible cord is used in any location where it could be damaged, it shall be protected by installation in conduit, enclosures, or guards.

23.11.6.2 Where flexible cord penetrates a metal surface, rubber or plastic grommets or bushings shall be installed.

23.11.7 Wiring Identification.

23.11.7.1 Each line voltage circuit originating from the main panelboard shall be identified.

23.11.7.2 The wire or circuit identification either shall reference a wiring diagram or wire list or shall indicate the final termination point of the circuit.

23.11.7.3 Where prewiring for future power sources or devices exists, the unterminated ends shall be marked with a label showing their wire size and intended function.

23.12 Wiring System Components.

23.12.1 Only stranded copper conductors with an insulation rated for temperatures of at least 194°F (90°C) and wet locations shall be used.

23.12.1.1 Conductors in flexible cord shall be sized in accordance with Table 400.5(A) of NFPA 70, *National Electrical Code*.

23.12.1.2 Conductors used in conduit shall be sized in accordance with Section 310.15, "Ampacities for Conductors Rated 0-2000 Volts," of NFPA 70.

23.12.1.3 Aluminum or copper-clad aluminum conductors shall not be used.

23.12.2 All boxes shall conform to and be mounted in accordance with Article 314, "Outlet, Device, Pull, and Junction Boxes; Conduit Bodies; Fittings; and Manholes," of NFPA 70.

23.12.2.1 All boxes shall be accessible using ordinary hand tools.

23.12.2.2 Boxes shall not be permitted behind welded or pop-riveted panels.

23.12.2.3 The maximum number of conductors permitted in any box shall be in accordance with Section 314.16, "Number of Conductors in Outlet, Device, and Junction Boxes, and Conduit Bodies," of NFPA 70.

--`,,```,,,,````-`-`,,`,,`,`,,`---

Copyright National Fire Protection Association
Provided by IHS under license with NFPA
No reproduction or networking permitted without license from IHS
Not for Resale

23.12.3* All wiring connections and terminations shall provide a positive mechanical and electrical connection.

23.12.3.1 Connectors shall be installed in accordance with the manufacturer's instructions.

23.12.3.2 Wire nuts or insulation displacement and insulation-piercing connectors shall not be used.

23.12.4* Each switch shall indicate the position of its contact points (i.e., open or closed) and shall be rated for the continuous operation of the load being controlled.

23.12.4.1 All switches shall be marked with a label indicating the function of the switch.

23.12.4.2* Circuit breakers used as switches shall be "switch rated" (SWD) or better.

23.12.4.3 Switches shall simultaneously open all associated line voltage conductors.

23.12.4.4 Switching of the neutral conductor alone shall not be permitted.

23.12.4.5 Line voltage circuits controlled by low voltage circuits shall be wired through properly rated relays in listed enclosures that control all nongrounded current-carrying conductors.

23.12.5 Receptacles and Inlet Devices.

23.12.5.1 Wet and Dry Locations.

23.12.5.1.1* All wet location receptacle outlets and inlet devices including those on hardwired, remote power distribution boxes, shall be of the grounding type, provided with a wet location cover, and installed in accordance with Section 406.8, "Receptacles in Damp or Wet Locations," of NFPA 70, *National Electrical Code*.

23.12.5.1.2 All receptacles located in a wet location shall be not less than 24 in. (600 mm) from the ground.

23.12.5.1.3* Receptacles on offroad fire apparatus shall be a minimum of 30 in. (750 mm) from the ground.

23.12.5.2 All receptacles located in a dry location shall be of the grounding type and shall be at least 12 in. (300 mm) above the interior floor height.

23.12.5.3 No receptacle shall be installed in a face-up position.

23.12.5.4 The face of any wet location receptacle shall be installed in a plane from vertical to not more than 45 degrees off vertical.

23.12.5.5 Receptacle Label.

23.12.5.5.1 Each receptacle shall be marked with a label indicating the nominal line voltage (120 volts or 240 volts) and the current rating in amps of the circuit.

23.12.5.5.2 If the receptacle is dc or other than single phase, that information shall also be marked on the label.

23.12.5.6* All receptacles and electrical inlet devices shall be listed to UL 498, *Standard for Safety Attachment Plugs and Receptacles*, or other recognized performance standards.

23.12.5.7 Receptacles used for dc voltages shall be rated for dc service.

23.13 Cord Reels. All cord reels shall be rated for continuous duty and installed to be accessible for removal, cord access, maintenance, and servicing.

23.13.1 The power rewind cord reel spool area shall be visible to the operator during the rewind operation, or the reel spool shall be encapsulated to prevent cord from spooling off the reel.

23.13.2 Rollers or guides shall be provided, where required, to prevent damage to the cord at reel spools or compartment openings.

23.13.3 Rewind Provision.

23.13.3.1 Manually operated reels shall have a hand crank.

23.13.3.2 Power rewind–type reels shall have the control in a position where the operator can observe the rewinding operation. If a reel is in an enclosure or out of direct view, the cord entry point to the enclosure shall be visible to the operator of the reel control.

23.13.3.3 The rewind control or crank shall not be over 72 in. (1830 mm) above the operator's standing position.

23.13.3.4 The rewind control shall be marked with a label indicating its function and shall be guarded to prevent accidental operation.

23.13.4* The reel shall be designed to hold 110 percent of the capacity needed for the intended cord length.

23.13.5* The wire size shall be in accordance with NFPA 70, *National Electrical Code*, Table 400.5(A).

23.13.6* Electrical cord shall be Type SEOOW, Type SOOW, or Type STOOW.

23.13.7* A label that indicates the following information shall be provided in a visible location adjacent to any permanently connected reel.

(1) Current rating
(2) Current type
(3) Phase
(4) Voltage
(5) Total cord length

23.13.8 Where a power distribution box is hardwired to the end of a cord that is stored on a fixed cord reel or other fixed storage means, the requirements in 23.13.8.1 through 23.13.8.6 shall apply.

23.13.8.1 The remote power distribution box shall be listed for use in a wet location.

23.13.8.2* The distribution box shall be as follows:

(1) Protected from corrosion
(2) Capable of being carried with a gloved hand
(3) Designed to keep the exterior electrical components above 2 in. (51 mm) of standing water

23.13.8.3* Inlets, receptacles, circuit breakers, or GFCI devices shall not be mounted on the top surface of the horizontal plane.

23.13.8.4 Branch circuit breakers shall be installed in the remote power distribution box if the overcurrent device protecting the feed cord to the box is too large to protect the wiring supplying the devices plugged onto the distribution box.

23.13.8.5* Remote power distribution boxes shall have a light on the box to indicate the power is on.

23.13.8.5.1* The light shall be visible in a 360 degree plane from a minimum of 200 ft (60 m) in complete darkness.

23.13.8.5.2 The light shall be mechanically protected to prevent damage.

Copyright National Fire Protection Association
Provided by IHS under license with NFPA
No reproduction or networking permitted without license from IHS
Not for Resale

23.13.8.6 The hardwired portable cord connection to the box shall have strain relief and meet the intended usage requirements.

23.14 Scene Lighting Systems. Where fixed scene lights are supplied, the requirements in 23.14.1 through 23.14.4 shall apply.

23.14.1 All scene lights shall be provided with a lens or a means for preventing damage from water spray and shall be listed for wet location usage.

23.14.2 Handle on Lights.

23.14.2.1 If the light is adjustable, a handle shall be provided.

23.14.2.2 The design of the light shall not allow the temperature of the handle to exceed 131°F (55°C).

23.14.3 The manufacturer of the device shall type certify that the scene light has been tested and complies with the vibration testing requirements of SAE J575, *Test Methods and Equipment for Lighting Devices and Components for Use on Vehicles Less Than 2032 mm in Overall Width.*

23.14.4 If manually operated floodlights are not operable from the ground, access steps that meet the requirements of Section 15.7 and handrails that meet the requirements of Section 15.8 shall be provided to allow the user to reach the floodlights.

23.15 Power-Operated Light Mast.

23.15.1* General.

23.15.1.1 The mast shall be designed to sustain the intended tip load with at least a 125 percent safety factor.

23.15.1.2 The mast shall withstand a minimum of a 50 mph (80 kph) wind in a raised, unguyed position.

23.15.2* Installation and Operational Requirements.

23.15.2.1 The mast shall be capable of being raised within 2 minutes.

23.15.2.2 Where the installation precludes the operator from seeing the light in its nested position, a means shall be provided to allow the operator to align the light for nesting when the operator is at the operator's position.

23.15.2.3* Appropriate warning labels on the hazards of electrocution shall be installed.

23.15.2.4 A means shall be provided to prevent operations that could cause damage to the power supply conductors.

23.15.2.5 In the event of a failure of the light tower's raising system while the tower is deployed or being deployed, a means shall be provided to limit the rate of descent in order to prevent injury to equipment or personnel.

23.15.2.6 A secondary means of control shall be provided to allow for emergency lowering of the mast.

23.15.2.7 Where the tower is powered by the chassis air brake system, the air supply shall be from an auxiliary air circuit that is equipped with a pressure protection valve and an auxiliary air tank(s).

23.15.2.8* An automatic deenergizing means shall be provided so there is no electrical power to the mast or to the light wiring when the mast is in a stowed position.

23.15.2.9 The hazard warning light required in Section 13.11 shall be illuminated whenever the light tower is not in the stowed position.

23.15.2.10 The operational envelope of the mast shall be automatically illuminated whenever the mast assembly is being raised, lowered, or rotated.

23.15.3 Labeling.

23.15.3.1 An instruction plate showing the operation of the mast and operational warning signs shall be provided at the operator's position.

23.15.3.2 A label shall be provided at the operator's position to indicate the following:

(1) Extended tower height from the ground
(2) Bulb replacement data

23.16* Electrical System Testing.

23.16.1 The wiring and associated equipment shall be tested by the apparatus manufacturer or the installer of the line voltage system.

23.16.2 Dielectric Voltage Withstand Test.

23.16.2.1 The wiring and permanently connected devices and equipment shall be subjected to a dielectric voltage withstand test of 900 volts for 1 minute.

23.16.2.2 The dielectric tester shall have a 500 volt-amperes (VA) or larger transformer, with a sinusoidal output voltage that can be verified.

23.16.2.3 The testing shall be performed after all body work has been completed.

23.16.2.4* The test shall be conducted as follows:

(1) Isolate the power source from the panel board and disconnect any solid state low voltage components.
(2) Connect one lead of the dielectric tester to all the hot and neutral busses tied together.
(3) Connect the other lead to the fire apparatus frame or body.
(4) Close any switches and circuit breakers in the circuit(s).
(5) Apply the dielectric voltage for 1 minute in accordance with the testing equipment manufacturer's instructions.

23.16.3* The electrical polarity of all permanently wired equipment, cord reels, and receptacles shall be tested to verify that wiring connections have been properly made.

23.16.4 Electrical light towers, floodlights, motors, fixed appliances, and portable generators shall be operated at their full rating or capacity for 30 minutes to ensure proper operation.

23.16.5* Operational Test of Fixed Power Source.

23.16.5.1 If the apparatus is equipped with a fixed power source, the apparatus manufacturer shall perform an operational test on the fixed power sources.

23.16.5.2 The testing of the fixed power source shall be witnessed, and the results of the tests of the fixed power source shall be certified by an independent third-party certification organization.

23.16.5.3 Test Procedure.

23.16.5.3.1 The prime mover shall be started from a cold start condition and the unloaded voltage and frequency shall be recorded.

Copyright National Fire Protection Association
Provided by IHS under license with NFPA
No reproduction or networking permitted without license from IHS
Not for Resale

23.16.5.3.2 The line voltage electrical system shall be loaded to at least 100 percent of the continuous rated wattage stated on the power source specification label. Testing with a resistive load bank shall be permitted.

23.16.5.3.3 The power source shall be operated in the manner specified by the apparatus manufacturer as documented on instruction plates or in operation manuals.

23.16.5.3.4 The power source shall be operated at a minimum of 100 percent of the continuous rated wattage as stated on the power source specification label for a minimum of 2 hours.

23.16.5.3.4.1 The load shall be adjusted to maintain the output wattage at or above the continuous rated wattage during the entire 2 hour test.

23.16.5.3.4.2 The following conditions shall be recorded at least every ½ hour during the test.

(1) The power source output voltage, frequency, and amperes
(2) The prime mover's oil pressure, water temperature, and transmission temperature, if applicable
(3) The power source hydraulic fluid temperature, if applicable
(4) The ambient temperature and power source air inlet temperature

23.16.5.3.4.3 The following conditions shall be recorded once during the test for power sources driven by dedicated auxiliary internal combustion engines.

(1) Altitude
(2) Barometric pressure
(3) Relative humidity

23.16.5.3.5 The load shall be removed, and the unloaded voltage and frequency shall be recorded.

23.16.5.3.6 Voltage shall be maintained within ±10 percent of the voltage stated on the power source specification label during the entire test.

23.16.5.3.7 Frequency shall be maintained within ±3 Hz of the frequency stated on the power source specification label during the entire test.

23.16.5.3.8 The total continuous electrical loads excluding those loads associated with the equipment defined in 23.16.5.3.10.2 shall be applied during the testing unless an auxiliary engine drives the power source.

23.16.5.3.9 If the apparatus is equipped with a fire pump, the 2 hour operational test of the fixed power source shall be completed with the fire pump pumping at 100 percent capacity at 150 psi (1000 kPa) net pump pressure. The test shall be permitted to be run concurrently with the pump certification test required in 16.13.1.

23.16.5.3.10 Prime Mover–Driven Accessories.

23.16.5.3.10.1 Accessories driven by the power source prime mover shall not be functionally disconnected or otherwise rendered inoperative during the line voltage electrical tests.

23.16.5.3.10.2 The following devices shall be permitted to be turned off or not operating during the fixed power source test.

(1) Aerial hydraulic pump
(2) Foam pump
(3) Hydraulically driven equipment, other than a hydraulically driven line voltage generator
(4) Winch
(5) Windshield wipers
(6) Four-way hazard flashers
(7) Compressed air foam system (CAFS) compressor

23.16.5.3.11 If the line voltage power is derived from the fire apparatus's low voltage system and is the primary source for line voltage, the power source shall not be shed by a load management system during the 2 hour test.

23.16.6 The results of each test shall be recorded on an appropriate form and provided with the delivery documentation

Chapter 24 Command and Communications

24.1 General. If the fire apparatus is equipped with a separate communications area or if it is used as a totally dedicated command apparatus, it shall meet the requirements of this chapter.

24.2* Location.

24.2.1* The command center shall be enclosed within a vehicle crew area or body.

24.2.2* The size of the command center located in a body shall be a minimum of 25 ft^2 (2.3 m^2) of floor space.

24.3* Climate Control.

24.3.1 The command area shall be provided with a heater capable of maintaining the temperature at a minimum of 60°F (16°C) with the fire apparatus's doors closed.

24.3.2 If an air conditioner is provided, it shall be capable of maintaining a minimum temperature of 20°F (11°C) below ambient down to 72°F (22°C) with the fire apparatus's doors closed.

24.4* Noise Levels. When the fire apparatus is stopped with major operational components in operation, the noise levels in the command area shall not exceed 80 dBA.

24.5 Lighting Levels.

24.5.1 The command area shall have a switch control at the door entry area for general entry lighting or automatic dome lighting.

24.5.2* Lighting levels during command operations shall provide a continuous 100 fc (1000 lx) in the command area.

24.6 Command Working Surfaces and Countertop.

24.6.1* Horizontal working surfaces shall be smooth and shall have corners and edges that will not cause injury or damage when rubbed up against.

24.6.2 Chair-level work surfaces shall be 28 in. to 30 in. (710 mm to 760 mm) above the floor.

24.6.3 Standup work surfaces shall be 36 in. to 40 in. (900 mm to 1000 mm) above the floor.

24.7 Seating in Command Center.

24.7.1* If seating is provided in the command center and that same seating is used during mobile operations (moving over the highway), the seat(s) and crew area(s) shall comply with Section 14.1.

24.7.2 Storage shall be provided for all seating that is not permanently mounted in the fire apparatus so that the seating can be stored in such a way as to protect all passengers while the fire apparatus is in motion.

Copyright National Fire Protection Association
Provided by IHS under license with NFPA
No reproduction or networking permitted without license from IHS
Not for Resale

24.7.3 A visible label shall be attached to each nonpermanently mounted seat indicating that the seat is not to be used while the fire apparatus is in transit and is to be stored during that time.

24.8* Cabinets and Equipment Storage. Cabinets for the storage of equipment shall be designed and engineered to contain the equipment during periods of transit.

24.9 Wall, Ceiling, and Floor Surfaces.

24.9.1* The interior surfaces shall be designed to sustain the usage expected in a command area.

24.9.2 The interior surfaces of command areas shall be free of sharp corners, projections, and edges.

24.9.3 Floor surfaces shall be capable of being routinely cleaned.

24.9.3.1 Floor mats or coverings shall be durable and removable for cleaning.

24.9.3.2 Floor surfaces, walking surfaces, and access steps shall comply with Section 15.7.

24.9.3.3 Access handrails shall comply with Section 15.8.

24.9.4 Dry-type greaseboards, corkboards, chalk-type boards, or similar bulletin- or command-type wall surfaces shall be fastened in place and shall be replaceable.

24.10 Communications and Electrical Consoles.

24.10.1* The communications equipment shall be installed in accordance with the component manufacturer's instructions and manuals.

24.10.2 If a radio or electrical console is provided, it shall be enclosed on all sides to afford protection to equipment mounted in the console.

24.10.2.1 The front surface shall be hinged or bolted in place.

24.10.2.2 Additional hinged or removable panels shall be provided, as required, for access to equipment.

24.11* Computer Equipment and Installation.

24.11.1 All computer equipment shall be installed in a manner to reduce shock, vibration, and mechanical injury.

24.11.2 All equipment not used during transit, such as computer equipment, shall be stored in cabinets or mounted to comply with 14.1.11.

24.11.3 Computer Electrical Outlets.

24.11.3.1 Electrical outlets specifically for computer use, whether 12 volt or 120 volt, shall be marked with a label for their intended usage and power output.

24.11.3.2 The outlet shall be tested by the apparatus builder to ensure that they meet the voltage and amperage specified on the label.

24.12 Video Equipment and Installation.

24.12.1 The purchaser shall detail the exact video equipment that is to be mounted on, and used with, the apparatus.

24.12.2 The storage of video equipment shall be in enclosed cabinets, with padding to prevent mechanical injury and quick release straps to hold the equipment in its designated storage area.

24.12.3 If a video monitor is provided, it shall be mounted so as to prevent it from being damaged during transit.

24.12.4 If the equipment is to be externally mounted, mounting brackets and outlet plugs shall be installed as necessary to accommodate the outside mounting of video equipment.

24.12.5 Roof access ladders, steps, and safety railings shall meet the requirements of and be installed as required by Chapter 15.

Chapter 25 Air Systems

25.1 Application.

25.1.1 Where a breathing air system or a utility air system is mounted on fire apparatus, the requirements of this chapter shall apply.

25.1.2 This chapter shall not apply to a compressed air foam system (CAFS).

25.2* Provisions Applying to All Air Systems.

25.2.1* Compressor and booster supplied systems shall be capable of storage and operation in any ambient temperature between 32°F and 110°F (0°C and 43°C).

25.2.2 Cascade systems shall be capable of storage and operation in any ambient temperature between 0°F and 110°F (–18°C and 43°C).

25.2.3 The air system shall be designed so that it can be stored and operated in environments with relative humidity up to and including 100 percent.

25.2.4 All materials used in the air system shall be corrosion resistant or treated to resist corrosion unless the finished product will be in continual contact with a noncorrosive lubricant.

25.2.5 Assembly and Installation Practices.

25.2.5.1 Installation of low voltage electrical components shall meet the requirements of Chapter 13, and installation of line voltage electrical components shall meet the requirements of Chapter 23.

25.2.5.2 Hot Surfaces.

25.2.5.2.1 Surfaces over 142°F (61°C) shall be covered with a thermal insulating material or shall be mechanically guarded to protect the operator.

25.2.5.2.2 If covering or guarding the surface affects the operation of the component, a label shall be provided that states "Caution: Hot Surfaces When Operating."

25.2.5.3 The air system shall be designed and constructed to withstand the stresses, vibrations, and other conditions incident to being mounted on a fire apparatus and being used in mobile service.

25.2.5.4 Locking Devices.

25.2.5.4.1 All screws, pins, bolts, or other fasteners whose failure would create a hazardous condition for personnel or equipment shall be equipped with locking devices.

25.2.5.4.2 Safety wire, self-locking nuts, cotter pins, lock washers, and liquid-locking compounds shall be acceptable.

--`,,```,,,,````-`-`,,`,,`,`,,`---

Copyright National Fire Protection Association
Provided by IHS under license with NFPA
No reproduction or networking permitted without license from IHS
Not for Resale

25.2.6 Breathing Air Systems.

25.2.6.1 Each part utilized in the fabrication of the air system and its components shall be designed for use in compressed breathing air service at pressures, temperatures, and flow rates that will be encountered during actual air system operation.

25.2.6.2 Discharge air from a compressor shall pass through a purification system prior to distribution.

25.2.6.3 Prior to the initial air quality test and commissioning, the breathing air system shall be purged with pure air until moisture and other contaminants have been removed.

25.2.7 General Piping and Installation.

25.2.7.1 All pneumatic fittings, tubing, and hose shall be rated for the maximum allowable working pressure that could be encountered, with a test safety factor of not less than 4:1.

25.2.7.2 All pneumatic fittings, tubing, and hose shall be corrosion resistant or treated to resist corrosion.

25.2.7.3 No threaded close nipples shall be used.

25.2.7.4 Plugs shall be bar stock type with hex heads.

25.2.7.5 All piping and tubing shall be blown clean with clean, dry air before being installed.

25.2.7.6 When making up threaded piping joints, the sealant shall be applied to the thread in a manner that will prohibit entry of the sealant into the piping system.

25.2.7.7 Pipes or tubes installed, but not connected, shall have the ends closed with threaded caps or plugs to prevent the entry of foreign material.

25.2.7.7.1 Air connections on equipment or panels shall be provided with a threaded dust cap on a safety chain or shall be a quick disconnect–type fitting.

25.2.7.7.2 The cap or the quick disconnect–type fitting shall have a safety factor of 4:1.

25.2.7.8 All rigid piping compressed air lines shall be clamped to a rigid body or chassis component at a minimum of every 16 in. (400 mm) and within 4 in. (100 mm) on each side of a coupling or elbow.

25.2.7.8.1 Rigid piping shall run in an orderly manner with a minimum of bends and elbows.

25.2.7.8.2 The piping installation shall provide room for maintenance and repairs with access panels provided where applicable.

25.2.7.9 Any rigid piping or flexible lines that run through a compartment shall be protected with removable mechanical protection to prevent wear or damage from equipment stored in the compartment.

25.2.8 Flexible Hose.

25.2.8.1 Flexible hose shall be installed in such a manner as to prevent cuts, abrasions, exposure to damage, excessive temperatures, damage from loose equipment, and excessive bending.

25.2.8.2 The hose shall be installed in a manner that permits removal of the hose without removal of major vehicle components or vehicle-mounted equipment.

25.2.9 Operator's Panel and Controls.

25.2.9.1 The air operator's panel containing gauges, instruments, and valves shall face the operator's position and shall be lighted in compliance with 4.10.1.

25.2.9.2 Any instrument that is to be used as a basis for manual control shall be visible and controlled from the operator's position.

25.2.9.3 Accessory gauges or controls that are not critical to the mission of the air system shall be permitted to be mounted remotely from the operator's panel or at another location where they can be monitored.

25.2.9.4 Pressure gauges or other devices shall not be mounted directly on lines where excessive vibration is likely to be present.

25.2.9.5 With the exception of direct connected process instruments (e.g., pressure gauges), instruments shall not use instrument piping or electrical conduit for support.

25.2.9.6 Any gauge shall be capable of reading at least 10 percent but not greater than 50 percent higher than any safety relief valve settings on lines supplying those gauges.

25.2.10 Maintainability.

25.2.10.1 The design of the air system shall provide for maintainability by including, but not necessarily being limited to, the following maintainability objectives and technical and operational constraints:

(1) The design shall be such that faults can be isolated to allow access to removable assemblies or components.
(2) Fuses, if used, shall be readily accessible.
(3) The physical arrangement of components shall be such that they can be inspected, serviced, calibrated, and, if necessary, adjusted without being removed and with minimum disturbance to other parts.
(4) The design shall be such that inspection, service, and replacement can be accomplished using a minimum of special tools and support equipment.
(5) Test points shall be provided to facilitate malfunction isolation and the connection of calibration instrumentation.
(6) If equipment requires oil or other liquid drainage, it shall be provided with a remote drainage system that is equipped with a control valve, threaded plug or cap, and a label to note usage.

25.2.10.2 If special tools are required to service or maintain the air system, those tools shall be supplied by the manufacturer.

25.2.11 Labels and Plates.

25.2.11.1 All major components and accessories shall be identified with a label.

25.2.11.2 Caution and warning signs shall be affixed where necessary.

25.2.11.3 Instruction plate(s) shall be installed, as applicable, to advise the operator on the proper adjustment or setting of controls for safe operation.

25.2.11.4 Controls, gauges, valves, and other equipment shall be marked with a label indicating their function.

25.2.11.5 All controls and valves shall have a label to indicate movement direction.

Copyright National Fire Protection Association
Provided by IHS under license with NFPA
No reproduction or networking permitted without license from IHS
Not for Resale

25.2.11.6* The major component manufacturers and installers of the air system shall provide electrical diagrams and air piping drawings that document the system and its operation.

25.2.11.6.1 All symbols used shall be described in a key chart on the drawing.

25.2.11.6.2 All diagrams and drawings shall be delivered with the fire apparatus.

25.2.11.6.3 The following information shall be shown:

(1) The general arrangement of the air system, including air storage, air compressor (if provided), air panel, SCBA fill station (if provided), and air inlets and outlets
(2) The electrical wiring arrangement and controls, denoting shore power equipment, low voltage equipment, and line voltage equipment
(3) The air operator's control panel surface showing all controls, gauges, valves, outlets, and other specified equipment, including the labeling on the panel and controls
(4) The air piping arrangement with air flow direction indicated and showing all valves, gauges, controls, cylinders or vessels, and furnished equipment

25.2.12 Documentation.

25.2.12.1 Two complete sets of documentation that cover the operation and maintenance of the system shall be provided.

25.2.12.2 The documentation shall be permitted to be in printed format, electronic format, audio-visual format, or a combination thereof.

25.2.12.3 Nomenclature for switches, controls, and indicators shall be consistent with that used on the diagrams required in 25.2.11.6 and on equipment nameplates.

25.2.12.4 The manuals shall include, but not necessarily be limited to, the following:

(1) An illustrated parts lists
(2) A schedule of maintenance and adjustment checks
(3) A lubrication schedule
(4) Troubleshooting information to enable a technician to locate trouble and to make repairs or adjustments to the equipment
(5) Step-by-step procedures for starting, operating, and stopping the equipment

25.2.13 Training and Instruction.

25.2.13.1* If a breathing air system without a compressor/purification system is provided, the contractor shall provide training to fire department personnel.

25.2.13.1.1 This training shall include:

(1) Complete system component familiarization/walkaround
(2) A complete review of the system and its safety features
(3) A review of all operation, service, and maintenance documentation
(4) Hands-on familiarization of the safe operation of the fill station and air management panel, including actual SCBA filling, air reel operations, and other pertinent operations of the system

25.2.13.1.2 The trainer shall be certified by the air compressor system assembler as qualified to perform such training.

25.2.13.2* If a breathing air system that includes a compressor/purification system is provided, a representative of the breathing air system manufacturer shall provide training to fire department personnel.

25.2.13.2.1 The training shall include the items defined in 25.2.13.1.1.

25.2.13.2.2 The training shall also include the following:

(1) A review of the compressor/purification system operations and maintenance, including the operations and maintenance documentation and the name, address, and phone number of the local distributor
(2) Procedures to change purification cartridges
(3) Hands-on familiarization of the safe operation of the compressor and purification system

25.2.13.3 The fire department shall designate one or two individuals to be the focal points for all the breathing air system training and equipment indoctrination.

25.2.13.4 The fire department shall designate where the training is to take place.

25.3* Breathing Air Compressor.

25.3.1 The purchaser shall determine the working pressure and capacity required from the compressor and state those requirements in the purchase specifications.

25.3.2 Compressor Intake.

25.3.2.1* The air intake shall be located where it will not be contaminated by the exhaust of the fire apparatus or the exhaust of the gasoline or diesel engines used to power the compressor or other components on the apparatus.

25.3.2.2 If an extended air intake pipe is used, it shall be installed in accordance with the compressor manufacturer's specifications.

25.3.3 Cooling.

25.3.3.1 The final installer shall assemble and install all components in accordance with the component manufacturers' instructions and shall test the final assembled system in accordance with this standard and the operating parameters of the component manufacturers.

25.3.3.2* Provisions shall be made by the final installer to ensure there is adequate cooling to keep the air compressor within the compressor manufacturer's operating temperature range while it is operating in an ambient temperature range between 32°F and 110°F (0°C and 43°C).

25.3.3.2.1 The final stage installer of the air compressor shall submit air system arrangement drawings, air flow schematic drawings, body drawings, and other pertinent data to the air compressor assembler for written approval.

25.3.3.2.2 A copy of this approval shall be retained by the final assembler in apparatus documentation.

25.3.3.3 The temperature of the compressed air shall not exceed 20°F (11°C) above ambient when measured at the discharge nozzle of the compressor aftercooler.

25.3.4 A relief valve shall be provided after each stage of compression.

25.3.5 If interstage condensate traps are provided by the compressor manufacturer, they shall be plumbed to the final separator and to an automatic condensate drain system, which shall be plumbed to a reservoir to collect the discharged liquids.

Copyright National Fire Protection Association
Provided by IHS under license with NFPA
No reproduction or networking permitted without license from IHS
Not for Resale

25.3.6 Compressor Controls.

25.3.6.1 All compressors shall have automatic audible and visual alarms and controls at the main operator's panel that shut down the compressor and prevent automatic restart when any of the following conditions occur:

(1) Oil level or oil pressure is low.
(2) Discharge air temperature is higher than recommended by the manufacturer.
(3) Moisture in the compressed air at the purification system outlet exceeds 24 ppm.
(4) Carbon monoxide level within the processed air exceeds 10 ppm.

25.3.6.2* All compressors shall be equipped with the following:

(1) An air pressure switch that controls the maximum operating pressure
(2) Interstage pressure gauges after each compression stage
(3) Final stage pressure gauge
(4) Oil pressure gauge on pressure lubricated compressors or an oil level indicator or device on nonpressure oil-type compressors
(5) Electric, nonresettable hourmeter(s)

25.3.6.3* Compressors with electric motors shall be equipped with the following:

(1) Magnetic motor starter with motor overload protection
(2) Protective control to prevent automatic restart after power loss has been restored

25.3.6.4 Compressors with gasoline and diesel engines shall be equipped with the following:

(1) Means to allow the engine to be started, idled, and run with the compressor disengaged or unloaded
(2) Electric, nonresettable hourmeter to record engine operating hours

25.3.7 The compressor and driver assembly shall be mounted to a subassembly with shock mounts to provide vibration dampening.

25.3.7.1 The compressor frame shall have provision for safe handling or lifting.

25.3.7.2 Frames for compressors with V-belt drives shall include a means to adjust the V-belt tension.

25.3.8 The air compressor shall have a label affixed in a conspicuous location showing the name and address of the manufacturer, serial number and model number, the date of manufacture, and the rated capacity.

25.4 Purification System. If the compressed air system is to supply breathing air, a purification system that meets the requirements of 25.4.1 through 25.4.7.2 shall be installed.

25.4.1* If the processed air is to be used as breathing air, the purification system shall produce breathing air that meets the requirements of NFPA 1989, *Standard on Breathing Air Quality for Fire and Emergency Services Respiratory Protection.*

25.4.2 If the processed air is to be used for underwater diving, the purification system shall produce breathing air that meets the requirements of Grade E breathing air as specified by CGA G-7.1, *Commodity Specification for Air.*

25.4.3 The purification system shall be capable of producing the required air quality at full capacity of the compressor for a minimum of 50 hours with inlet air of 80°F (27°C) at saturation.

25.4.3.1 The purification system shall be equipped with purifier cartridges and filter elements.

25.4.3.2* The design of the purification system shall permit replacement of the purifier cartridges without disconnecting piping or other components.

25.4.3.3 The purifier system shall be protected from mechanical damage caused by loose equipment stored on the apparatus

25.4.4 A relief valve shall be provided in the purification system, set no higher than 10 percent above the maximum allowable working pressure.

25.4.5 A mechanical separator shall be provided and shall be piped to the automatic drain system.

25.4.5.1 A check valve shall be installed between the mechanical separator and the remainder of the purification system.

25.4.5.2 The mechanical separator and the purifier housings shall be designed for a 4:1 safety factor at their maximum allowable working pressure.

25.4.5.3 The mechanical separator and the purifier housings shall be corrosion resistant or treated to resist corrosion.

25.4.6 An upstream valve and pressure gauge shall be installed ahead of the purifier to control and monitor depressurization before service.

25.4.7 A pressure regulator valve (back pressure regulator or minimum pressure valve) with a minimum setting of 2000 psi (14,000 kPa) shall be installed in the purification system downstream of the mechanical separator and purifier housings.

25.4.7.1 A piping connection shall be provided downstream of the pressure regulator valve to provide an air sample for the air quality monitors.

25.4.7.2 A line valve shall be installed on the purifier outlet to isolate the purifier from the remainder of the system during inspection, maintenance, and repairs.

25.5* Air Storage Systems.

25.5.1 Transportable Air Tanks.

25.5.1.1 Transportable air tanks shall comply with 49 CFR 178.37, "Specification 3AA and 3AAX seamless steel cylinders," or 29 CFR 1910.169, "Air receivers."

25.5.1.2 Relief valves on transportable air tanks shall be of the ASME type on ASME cylinders and of the DOT type on DOT cylinders or equal for the rated pressure.

25.5.2 Valves installed on air tanks shall meet the requirements of the Compressed Gas Association regarding pressure and usage with compressed air.

25.5.3 Air tanks shall be permanently stamped or identified in accordance with DOT or ASME regulations.

25.5.4 If the installation utilizes cylinders that require periodic testing, a label shall be placed on or near the operator's panel that provides the following:

(1) The original cylinder test date stamped on the cylinders
(2) The recommended testing interval
(3) Five additional open spaces, appropriately labeled, for the user to enter actual retesting dates

25.5.5 The manufacturer's test date (month and year) on each air tank shall be current within 12 months of the apparatus delivery date.

Copyright National Fire Protection Association
Provided by IHS under license with NFPA
No reproduction or networking permitted without license from IHS
Not for Resale

25.5.6 Air tanks shall be marked with a label that reads "High Pressure ____ psi Breathing Air."

25.5.7 Air Tank Mounting.

25.5.7.1 Air tanks shall be mounted in an arrangement that will hold the tanks in all types of mobile use.

25.5.7.1.1 A protective device(s) shall be provided to protect the air tank valve(s) and associated piping from damage as a result of accidental impact.

25.5.7.1.2 The protective device(s) shall not prevent access for operation and inspection.

25.5.7.2 The air tank mounting shall facilitate removal of air tanks for inspection, testing, or service.

25.5.7.2.1 Air tanks shall be installed so that all air tanks, control valves, and associated piping are readily accessible.

25.5.7.2.2 Air tanks shall be mounted in such a fashion to permit visual inspection of external surfaces and emergency access to shutoff of tank valves.

25.5.7.2.3 The air tank location shall be away from any heat-producing devices such as the generator engine or exhaust.

25.5.8 Air Tank Valve Control and Monitoring.

25.5.8.1 A slow-operating valve(s) shall be provided to control airflow into and out of the storage system (if applicable).

25.5.8.2 A separate inlet connection shall be provided so that the storage system can be refilled from a remote source.

25.5.8.2.1 The inlet connection fitting shall be compatible with the rated pressure of the storage system as specified by CGA G-7, *Compressed Air for Human Respiration*, and shall be equipped with a dust cap with a chain and "pin hole" to release leaking pressure when not in use.

25.5.8.2.2 A check valve or a line valve shall be provided on the inlet connection.

25.5.8.3 Gauges shall be provided to allow for monitoring pressures from the air storage system or individual air tanks specified by the authority having jurisdiction.

25.6* Air Booster Systems.

25.6.1 Line valves shall be provided at the air control panel or on the air booster to control the booster inlet air supply line and the booster discharge airflow.

25.6.2 A pressure gauge shall be provided on the supply line and the discharge line from the booster.

25.6.3 A safety valve or high pressure switch shall be installed on the discharge side of the air booster.

25.6.4 The pressure setting on the safety valve or high pressure switch shall not exceed the maximum allowable working pressure of the booster, the booster's distribution piping, or the air system components.

25.7 Air Supply Regulation. Air supply regulation shall include the following provisions on an operator's air control panel:

(1) One air pressure gauge marked with a label that reads "Supply Pressure" between the air supply line valve and the pressure self-relieving regulator
(2) One slow-operating air supply valve on the intake supply line
(3) One self-relieving adjustable pressure regulator equipped with a device to prevent unintentional adjustment
(4) One air pressure gauge downstream of the pressure regulator
(5) One pressure relief valve preset at not over 10 percent above the pressure regulator output setting
(6) A warning label installed next to the pressure regulator to indicate working pressure setting and that a relief valve will release at 10 percent higher than the working pressure

25.8 Air Control Panel.

25.8.1 The air control panel and system piping arrangement for a compressor-supplied breathing air system shall allow the operator to perform the following functions:

(1) Fill the storage system directly from the compressor/purification system
(2) Fill SCBA cylinders directly from the compressor/purification system
(3) Fill SCBA cylinders directly from the storage system/air booster
(4) Utilize the "cascade method" or "bulk fill method" of filling SCBA cylinders, as desired
(5) Bypass filling of the storage system to top off SCBA directly from the compressor/purification system
(6) Regulate the maximum SCBA fill pressure
(7) Meter airflow to control the SCBA fill rate with a slow-operating valve
(8) Take an air sample to check air quality (at panel or at end of air reel hose, if applicable)

25.8.2 When a cascade system is installed, an air control panel and system piping arrangement shall allow the operator to perform the following functions:

(1) Fill the storage system directly from a remote air compressor
(2) Fill SCBA cylinders directly from a remote air compressor
(3) Fill SCBA cylinders directly from the storage system
(4) Fill SCBA cylinders directly from a booster pump that is supplied by the storage system, if provided
(5) Utilize the "cascade method," the "bulk fill method," or both for filling SCBA cylinders, as appropriate to the design of the system
(6) Regulate the maximum SCBA fill pressure
(7) Meter airflow to control the SCBA fill rate with a slow-operating valve
(8) Take an air sample to check air quality (at the panel or at the end of an air reel hose, if applicable)

25.9 SCBA Fill Station.

25.9.1 If SCBA or SCUBA air cylinders are to be refilled from a fire apparatus–mounted air system, the fill station shall meet the requirements of 25.9.1.1 through 25.9.1.6.

25.9.1.1 The fill station shall fully enclose the cylinder during filling to contain the fragments if a cylinder ruptures.

25.9.1.2 The fill station shall fully enclose the refill lines to the cylinders.

25.9.1.3 The fill station shall direct the concussive air blast away from the operator and bystanders.

25.9.1.4 A fill station within an enclosed crew area shall have provisions to vent the concussive air blast to the exterior of the fire apparatus.

25.9.1.5 A means shall be provided to prevent SCBA or SCUBA cylinders from being refilled unless the fill station is in the "cylinder fill operation position."

--`,,```,,,,````-`-`,,`,,`,`,,`---

Copyright National Fire Protection Association
Provided by IHS under license with NFPA
No reproduction or networking permitted without license from IHS
Not for Resale

25.9.1.6 A warning sign shall indicate the hazards inherent in the operation of filling SCBA or SCUBA cylinders.

25.9.2 Pressure gauges, pressure-regulating devices, and controls shall be provided to allow the operator to control the SCBA cylinder fill pressure and fill rate on each SCBA fill hose.

25.9.3 A valve(s) on a fill line(s) shall be a slow-operating valve.

25.9.4 A separate bleeder and flow restriction device shall be provided on each SCBA fill hose.

25.9.5 Testing and Certification.

25.9.5.1 The manufacturer of the enclosed air refill station shall type test a standard production model to validate the design.

25.9.5.1.1 The test shall include pressurizing a 1 hour SCBA cylinder rated at a gauge pressure of 4500 psi (30,000 kPa) to failure.

25.9.5.1.2 If the system provides for simultaneously refilling of multiple cylinders, the other chambers shall contain air cylinders of equal size filled to a gauge pressure of 4500 psi (30,000 kPa) during the test. These cylinders shall not rupture during the test.

25.9.5.2 The testing shall prove that the air refill station is capable of containing all fragments of a failed cylinder so as to protect the operator and not rupture cylinders in adjacent chambers and prove that the venting provisions direct the air-concussive release away from the operator.

25.9.5.3 All test results shall be certified by an independent third-party certification organization.

25.10* Air Hose Reels.

25.10.1* Any permanently mounted air hose reel shall be certified by the reel manufacturer for use at the maximum expected working pressure with a safety factor of at least 4:1.

25.10.2 The air hose reel swivel joint, connecting feed hose, check valve, and air supply equipment shall be rated for the maximum working pressure with a safety factor of at least 4:1.

25.10.3 The air hose reel shall be designed to hold at least 110 percent of the intended hose length with a minimum capacity of 100 ft (30 m).

25.10.4 Size of Fluid Path.

25.10.4.1 The air hose reel shall have a full flow–style swivel joint and a hose connection designed and sized to match the hose intended to be used.

25.10.4.2 The air hose reel shall have a minimum ½ in. (13 mm) ID fluid path for low pressure reels [gauge pressure of 0 psi to 300 psi (0 kPa to 2000 kPa)] or ¼ in. (6.5 mm) ID fluid path for high pressure reels [gauge pressure over 300 psi (2000 kPa)].

25.10.5 The reel shall be marked with a plate to indicate its intended use and the following:

(1) Utility air or breathing air
(2) Operating pressure
(3) Total hose length
(4) Hose size (ID)

25.10.6 Air Supply to Air Reel.

25.10.6.1 The following equipment shall be provided on the intake air supply line to the reel where the air supply gauge pressure is up to 150 psi (1000 kPa):

(1) One air pressure gauge
(2) One slow-operating air supply valve
(3) One check valve

25.10.6.2 The following equipment shall be provided on the intake air supply line to the reel where the air supply gauge pressure is between 151 psi (1000 kPa) and 300 psi (2000 kPa):

(1) One air pressure gauge upstream of the air pressure–regulating device
(2) One slow-operating air supply valve
(3) One adjustable pressure regulator equipped with a device to prevent inadvertent or accidental adjustment
(4) One downstream pressure gauge [0 psi to 500 psi (0 kPa and 3400 kPa) range]

25.10.6.3 The following equipment shall be provided on the intake air supply line to the reel where the air supply gauge pressure is over 300 psi (2000 kPa):

(1) One air pressure gauge upstream of the air pressure–regulating device
(2) One slow-operating air supply valve
(3) One adjustable pressure regulator equipped with a device to prevent inadvertent or accidental adjustment
(4) One downstream pressure gauge
(5) One preset pressure relief valve set at not over 10 percent above maximum working pressure

25.10.7 The inlet to an air hose reel with an operating gauge pressure of over 300 psi (2000 kPa) shall have a flow-limiting device, such as a velocity-type valve, or a manually adjustable orifice-type valve.

25.10.7.1 The device shall be adjusted to restrict excessive flow and shall be located or covered to prevent readjustment.

25.10.7.2 The metering device shall not be used for normal shutoff valve purposes.

25.10.8 The final assembler of the air hose reel, piping, and valve system shall test the system at the maximum operating pressure of the system for 10 minutes with no pressure loss.

25.10.8.1 This test shall include the hose, if supplied, on the reel.

25.10.8.2* A permanent label shall be installed adjacent to the air reel controls to indicate the operating pressure range and the type of air provided, low pressure utility air [gauge pressure under 300 psi (2000 kPa)], low pressure breathing air [gauge pressure under 125 psi (800 kPa)], or high pressure breathing air [gauge pressure over 300 psi (2000 kPa)].

25.10.9 Air Reel Installation.

25.10.9.1 Reels installed in concealed locations shall be accessible for maintenance and servicing, hose access, and reel removal.

25.10.9.2 Rollers and guides shall be installed, where necessary, to prevent damage to the hose at the reel spool or compartment openings and to allow deployment and rewinding of the hose.

25.10.9.3 Reels shall be installed in such a manner so as not to expose the operator to the rewind components.

25.10.9.4 Manually operated reels shall have an operable hand crank with its central midpoint or centerline located not over 72 in. (1800 mm) above the ground or platform that is designed to serve as the operator's standing position.

Copyright National Fire Protection Association
Provided by IHS under license with NFPA
No reproduction or networking permitted without license from IHS
Not for Resale

25.10.9.5 Switches for power rewind–type reels shall be located in a position that allows the operator to safely rewind the hose.

25.10.9.5.1 The rewind control shall not be over 72 in. (1800 mm) above the operator's standing position.

25.10.9.5.2 The rewind control shall be marked with a label indicating its function and shall be guarded to prevent accidental activation.

25.10.10* Low Pressure Breathing-Air Reel.

25.10.10.1 The regulation of the output pressure from the breathing-air reel shall be at the reel or at an air control panel.

25.10.10.2 No shutoff valves or flow control valves shall be installed downstream of the pressure regulator except at the end of the hose.

25.10.10.3 The low pressure breathing-air supply shall be equipped with a low air pressure audible warning device on the air supply.

25.11 Air Hose.

25.11.1* All air hose and couplings supplied shall comply with their intended application and shall have a pressure rating equal to or greater than the highest pressure expected to be encountered as input to the hose with a test safety factor of at least 3:1.

25.11.2 Where the hose is attached to an air reel, it shall be done in a manner that allows for its removal.

25.11.3 Discharge Ends.

25.11.3.1* The discharge end of any breathing-air hose shall have a threaded connection.

25.11.3.1.1 If no other fittings are installed at the end of the hose, a temporary protective cap shall be installed to prevent internal contamination of the hose during shipping.

25.11.3.1.2 If the discharge end of hose will terminate with a threaded connection when in use, it shall be equipped with a slow-operating valve.

25.11.3.1.3 If the threaded end of the hose terminates in a quick-connection fitting, a slow operating valve and protective cap shall not be required.

25.11.3.1.4 Connections to hose shall comply with 25.2.7.

25.11.3.2 The discharge end of utility-air hose shall have either a threaded connection and slow-operating valve or a quick-connection fitting.

25.11.4 Color Coding.

25.11.4.1 The ends of the hose shall be color coded or marked with a label to designate the operating pressure of the hose.

25.11.4.2 If color coding is used, coding shall be as follows:

(1) Blue for utility air hose up to a gauge pressure of 300 psi (2000 kPa)
(2) White for breathing air hose up to a gauge pressure of 300 psi (2000 kPa)
(3) Yellow for breathing air hose from a gauge pressure of 301 psi to 3000 psi (2001 kPa to 20,000 kPa)
(4) Red for breathing air hose over a gauge pressure of 3000 psi (20,000 kPa)

25.11.5* Low pressure breathing air hose shall be a minimum ½ in. (13 mm) ID with a maximum hose length of not more than 300 ft (90 m).

25.11.6 Utility air hose shall be of a flexible type, with a scuff abrasion–resistant outer covering.

25.11.7 The hose shall be oil resistant and shall be compatible with oil, alkalis, kerosene, paraffin, grease, and salt solutions.

25.11.8 The hose connections for utility air hose shall not be the same as for low pressure breathing air hose or high pressure air hose.

25.12* Low Pressure Utility-Air Supply.

25.12.1* The chassis air brake system shall not be used for emergency use applications such as airbags, tools, air reels, and other rescue applications.

25.12.2* Where nonemergency applications are supplied by the chassis air brake system, the air supply shall be from an auxiliary air circuit that is equipped with a pressure protection valve (PPV) and auxiliary air tanks.

25.13 Remote Breathing-Air Systems. Remote breathing-air systems for pump panels or other remote locations shall comply with 25.13.1 through 25.13.7.

25.13.1 A breathing-air system shall be designed to supply breathing air for a minimum of two personnel at the specified location.

25.13.2 The system shall include storage for at least 400 ft^3 (11 m^3) of breathing air and shall meet the requirements of Section 25.5.

25.13.3 Piping System.

25.13.3.1 The piping system shall be arranged with an air regulator that shall limit the air pressure in the piping to the desired operating pressure.

25.13.3.2 A pressure relief valve set to relieve the pressure at 10 percent above the desired operating pressure shall be installed on the downstream side of the regulator.

25.13.4 All valves, pressure regulators, and gauges shall be protected from accidental damage.

25.13.5 The piping or hose system between the air cylinder(s) and point of use shall be installed to prevent damage due to abrasion, bending, or pinching.

25.13.6 A holder or box shall be provided for the storage of the breathing air equipment when it is not in use.

25.13.7 A low air warning system shall be provided that monitors the air volume and provides an audible warning when the air volume is at or below 20 percent.

25.14* Testing.

25.14.1 The complete air system shall be tested by the final system installer after its installation on the fire apparatus is complete, using the testing procedure prescribed by the system manufacturer.

25.14.2 The following items shall be tested or verified on all air systems:

(1) Pressurize the storage system to its maximum operational pressure and check all connections made as a part of the installation for leaks with a leak detection device, which could include bubble fluid or electronic means.
(2) Visually verify the relief valve set points and working pressure of the air storage vessel.
(3) Verify the accuracy of all pressure gauges.
(4) Fully test the operational capabilities of the fill station as established by the manufacturer of the fill station.
(5) Seal all fill adapter connections to eliminate the introduction of contaminants prior to shipment.

Copyright National Fire Protection Association
Provided by IHS under license with NFPA
No reproduction or networking permitted without license from IHS
Not for Resale

25.14.3 If the system's air supply includes a compressor/purification system, the following additional items shall be tested or verified:

(1) Confirm that the fluid levels are at the manufacturer's recommended levels, including the lubricant and coolant if the system is liquid cooled.
(2) Verify the expiration date of the purification filters and cartridges and that they have been installed as required by the manufacturer of the system.
(3) Operate the air compressor for a minimum of 2 hours or the period required to completely fill the onboard air storage cylinders or vessels, whichever is longer.
(4) Confirm that all compressor interstage pressures are within guidelines as established by the compressor manufacturer.
(5) Confirm the operation of the compressor shutdown switch at the pressure requested by the purchaser.
(6) Confirm the set point of the final pressure safety relief valve and pressure maintaining valve.
(7) Confirm the factory set limits of all electrical shutdown devices, including low oil pressure, automatic condensate drain system, high air temperature, excessive processed air moisture, high carbon monoxide, and motor amperage draw.
(8) Perform a cooling airflow test in the compartment where the compressor is installed and ensure that the flow meets the compressor manufacturer's requirements.

25.14.4 Air Quality.

25.14.4.1 Prior to delivery of the apparatus to the end user, the final system installer shall draw an air sample from the system and submit the sample to be tested in accordance with NFPA 1989, *Standard on Breathing Air Quality for Fire and Emergency Services Respiratory Protection.*

25.14.4.2 The breathing air shall meet the air quality standards defined in NFPA 1989.

25.14.5 If the system has a compressor/purification system, the person performing the tests for the final system installer shall have been trained by the compressor/purification system manufacturer and shall be able to provide proof of such training.

25.14.6 The results of all tests, including the air quality analysis, shall be documented and shall be included in the documentation given to the purchaser upon acceptance of the fire apparatus.

25.15 Initial Delivery. The contractor shall deliver the apparatus with all air cylinders, piping, hose, reels, and other fixed equipment charged with breathing air to a gauge pressure of at least 100 psi (700 kPa).

Chapter 26 Winches

26.1 General. If a chassis-mounted winch is installed on the apparatus, it shall meet the requirements of this chapter.

26.1.1* The winch shall be designed for the intended use and shall be installed in accordance with the winch manufacturer's recommendations.

26.1.2 All winches shall be equipped with rollers, guides, or both to prevent damage to the winch wire or synthetic rope or the apparatus.

26.1.3 All rollers and guides shall be designed to match the winch capacity and rope size.

26.2* Winch Wire or Synthetic Rope.

26.2.1 The winch shall have a minimum wire rope or synthetic rope length of 75 ft (22 m).

26.2.2 The wire rope shall be of a type and size recommended by the winch manufacturer.

26.2.3 The wire rope assembly, including all hardware such as clevises, hooks, and snatch blocks provided for attachment to the winch, shall have a design load rating greater than the line pull capacity of the winch.

26.3 Electric Powered Winches.

26.3.1 Controls.

26.3.1.1* Operation of the electric motor shall be by means of a handheld control with forward, neutral, and reverse positions.

26.3.1.2 The control shall be located at the end of an electrical cord that is a minimum 25 ft (7.6 m) long and that plugs into a receptacle near the winch location or shall be integrated into a handheld transmitter operating on an approved radio frequency for the winch control device.

26.3.1.3 A free-spooling clutch shall be provided in addition to the remote control device if the winch is not visible to the operator.

26.3.2 Power Supply.

26.3.2.1 Dedicated power and ground circuits shall be utilized.

26.3.2.2 Wiring shall be sized in accordance with the winch manufacturer's installation instructions and shall comply with Chapter 13 of this standard.

26.3.3 Removable Electric Winches.

26.3.3.1 Electric winches that are temporarily attached to the apparatus (at sides, rear, or front) shall meet the same requirements as permanently mounted winches.

26.3.3.2 The attachment to the apparatus shall be with quick-release devices.

26.3.3.3 The attachment system on the apparatus shall meet the requirements of Section 15.11.

26.3.4 Electric Power for Removable Winches.

26.3.4.1 The electrical power supply(ies) from the apparatus to the removable winch shall terminate at a quick disconnect receptacle with a connector plug.

26.3.4.2 The receptacle shall have a label indicating its use.

26.3.4.3 The power cord from the receptacle to the winch shall be sized for the power requirements of the winch.

26.3.4.4 The power cord shall be highly flexible and shall be protected from mechanical damage.

26.4 Hydraulically Driven Winches.

26.4.1 Hydraulic Hose.

26.4.1.1 All hydraulic hose shall be designed for the hydraulic pressures expected to be encountered.

26.4.1.2 Hose shall be a wire-braided type with a female swivel on one end.

Copyright National Fire Protection Association
Provided by IHS under license with NFPA
No reproduction or networking permitted without license from IHS
Not for Resale

26.4.2 The forward-neutral-reverse hydraulic control for the winch shall be electrically operated to permit remote control of the hydraulic winch operations.

26.4.2.1 Operation of the hydraulic winch shall be by means of a handheld control with forward, neutral, and reverse positions.

26.4.2.2 The control shall be located at the end of an electrical cord that is a minimum 25 ft (7.6 m) long and that plugs into a receptacle near the winch location or shall be integrated into a handheld transmitter operating on an approved radio frequency for the winch control device.

26.4.3 Hydraulic Tanks.

26.4.3.1 The hydraulic fluid tank shall be sized to prevent overheating of the fluid or cavitation of the hydraulic pump at its maximum output level.

26.4.3.2 The tank shall permit visual checking of the fluid level and easy refilling.

26.4.3.3 The fill point shall have a label permanently attached near the fill point stating the hydraulic oil quantity and type.

26.4.3.4 A drain plug shall be installed to permit complete draining of the tank.

26.4.3.5 A tank return line diffuser shall be installed in the tank.

26.4.3.6 A tank swash partition shall be installed in the tank between the suction and return lines.

26.4.3.7 A vent shall be supplied and shall be designed to prevent dirt and moisture from entering the tank.

26.4.4 The system shall be equipped with necessary filters and strainers to keep the hydraulic fluid within the cleanliness requirements necessary for operation of the hydraulic system.

26.4.5* The winch shall be equipped with clutch assembly to permit free spooling and quick removal of wire or synthetic rope.

26.4.5.1 This control shall be accessible without reaching under the apparatus.

26.4.5.2 If the winch is installed under the apparatus, it shall be remotely controlled.

26.4.6 The hydraulic winch engagement controls shall be located in the driving compartment.

26.4.6.1* A "Hydraulic Winch Engaged" indicator shall be provided in the driving compartment to indicate that the hydraulic pump engagement has been successfully completed.

26.4.6.2 An "OK to Operate Winch" indicator shall be provided in the driving compartment to indicate that the winch is engaged, that the transmission is in the proper gear (automatic transmissions only), and that the parking brake is engaged.

26.4.6.3 An interlock system shall be provided to prevent advancement of the engine speed in the driving compartment or at any operator's panel unless the transmission is in neutral and the parking brake is engaged, or the apparatus is in the "OK to Operate Winch" mode.

Annex A Explanatory Material

Annex A is not a part of the requirements of this NFPA document but is included for informational purposes only. This annex contains explanatory material, numbered to correspond with the applicable text paragraphs.

A.1.1 The term *new* as applied in this standard is intended to refer to the original construction of a fire apparatus using all new materials and parts.

A.1.3.1 The requirements of this standard apply to fire apparatus that have a GVWR of 10,000 lb (4500 kg) or greater. While the standard was not written specifically to cover vehicles below that size, fire departments should consider using those portions of this standard that address safety issues with smaller emergency vehicles. This would apply particularly to the restraint of equipment in the driving and crew areas and to providing adequate optical warning devices and reflective striping to increase the visibility of the vehicle.

A.1.4 It is not intended that this standard be applied retroactively to existing apparatus. However, if major renovations are made to an existing piece of apparatus, it is suggested that the apparatus be brought into line with this standard as closely as possible. NFPA 1912, *Standard for Fire Apparatus Refurbishing*, covers the requirements for refurbishing a fire apparatus.

A.1.6 Metric units of measurement in this standard are in accordance with the modernized metric system known as the International System of Units (SI). The liter, a unit that is outside of but recognized by SI, is commonly used in international fire protection where more precision is desired. Table A.1.6(a), Table A.1.6(b), and Table A.1.6(c) provide conversions factors as an aid to the user where more precision is desired.

Table A.1.6(a) Conversion Factors: Inch-Pound Units to Metric Units

1 gallon per minute (gpm)	=	3.785 liters per minute (L/min)
1 imperial gallon per minute (igpm)	=	4.542 liters per minute (L/min)
1 pound per square inch (psi)	=	6.895 kilopascals (kPa)
1 inch of mercury (in. Hg) at 32° F (0°C)	=	3.368 kilopascals (kPa)
1 inch (in.)	=	25.40 millimeters (mm)
1 foot (ft)	=	0.305 meter (m)
1 cubic foot (ft^3)	=	0.0283 cubic meter (m^3)
1 square inch ($in.^2$)	=	645.2 square millimeters (mm^2)
1 mile per hour (mph)	=	1.609 kilometers per hour (kmph)
1 pound (lb)	=	0.454 kilogram (kg)
1 horsepower (hp)	=	0.746 kilowatt (kW)
1 candlepower (cp)	=	12.566 lumens
1 pound per cubic foot (lb/ft^3)	=	16 kilograms per cubic meter (kg/m^3)
1 footcandle (fc)	=	10.764 lux (lx)
1 footlambert	=	3.427 candela/m^2

Copyright National Fire Protection Association
Provided by IHS under license with NFPA
No reproduction or networking permitted without license from IHS
Not for Resale

Table A.1.6(b) Conversion Factors: Metric Units to Inch-Pound Units

1 liter per minute (L/min)	=	0.264 gallon per minute (gpm)
1 liter per minute (L/min)	=	0.22 imperial gallon per minute (igpm)
1 kilopascal (kPa)	=	0.145 pound per square inch (psi)
1 kilopascal (kPa)	=	0.2953 inch of mercury (in. Hg) at 32° F (0°C)
1 millimeter (mm)	=	0.0394 inch (in.)
1 meter (m)	=	3.279 feet (ft)
1 cubic meter (m^3)	=	35.34 cubic feet (ft^3)
1 square millimeter (mm^2)	=	0.00155 square inch ($in.^2$)
1 kilometer per hour (kmph)	=	0.622 mile per hour (mph)
1 kilogram (kg)	=	2.2 pounds (lb)
1 kilowatt (kW)	=	1.34 horsepower (hp)
1 lumen (cp)	=	0.08 candlepower (cp)
1 kilogram per cubic meter (kg/m^3)	=	0.062 pound per cubic foot (lb/ft^3)
1 lux (lx)	=	0.092 footcandle (fc)
1 candela/m^2	=	0.292 footlambert

Table A.1.6(c) Useful Conversion Factors

1 gallon per minute (gpm)	=	0.833 imperial gallon per minute (igpm)
1 imperial gallon per minute (igpm)	=	1.2 gallons per minute (gpm)
1 foot (ft) of water	=	0.433 pound per square inch (psi)
1 pound per square inch (psi)	=	2.31 feet (ft) of water
1 metric ton (mton)	=	1000 kilograms (kg)
1 kilopascal (kPa)	=	0.01 bar
1 bar	=	100 kilopascals (kPa)

A.3.2.1 Approved. The National Fire Protection Association does not approve, inspect, or certify any installations, procedures, equipment, or materials; nor does it approve or evaluate testing laboratories. In determining the acceptability of installations, procedures, equipment, or materials, the authority having jurisdiction may base acceptance on compliance with NFPA or other appropriate standards. In the absence of such standards, said authority may require evidence of proper installation, procedure, or use. The authority having jurisdiction may also refer to the listings or labeling practices of an organization that is concerned with product evaluations and is thus in a position to determine compliance with appropriate standards for the current production of listed items.

A.3.2.2 Authority Having Jurisdiction (AHJ). The phrase "authority having jurisdiction," or its acronym AHJ, is used in NFPA documents in a broad manner, since jurisdictions and approval agencies vary, as do their responsibilities. Where public safety is primary, the authority having jurisdiction may be a federal, state, local, or other regional department or individual such as a fire chief; fire marshal; chief of a fire prevention bureau, labor department, or health department; building official; electrical inspector; or others having statutory authority. For insurance purposes, an insurance inspection department, rating bureau, or other insurance company representative may be the authority having jurisdiction. In many circumstances, the property owner or his or her designated agent assumes the role of the authority having jurisdiction; at government installations, the commanding officer or departmental official may be the authority having jurisdiction.

A.3.2.4 Listed. The means for identifying listed equipment may vary for each organization concerned with product evaluation; some organizations do not recognize equipment as listed unless it is also labeled. The authority having jurisdiction should utilize the system employed by the listing organization to identify a listed product.

A.3.3.41 Compound Gauge. On most gauges, zero equals atmospheric pressure. Gauges typically measure pressure above atmospheric pressure in pounds per square inch (psi) [kilopascals (kPa)] and below atmospheric pressure in inches of mercury (in. Hg) [kilopascals (kPa)].

A.3.3.42 Compressed Air Foam System (CAFS). A CAFS consists of a compressed air source, pressurized source of foam solution, and discharge hardware.

A.3.3.45 Contractor. The contractor might not necessarily manufacture the fire apparatus or any portion of the fire apparatus but is responsible for the completion, delivery, and acceptance of the entire unit.

A.3.3.55 Eductor. The pressure at the throat of a venturi is below atmospheric pressure, allowing foam concentrate or other fire fighting agent at atmospheric pressure in storage to flow into the water stream.

A.3.3.56 Electric Siren (Electromechanical). Only one type of warning sound can be produced by electric sirens, but the level or pitch can be varied by the speed of the motor.

A.3.3.59 Electronic Siren. Varied types of warning sounds can be produced by electronic sirens, such as a wail, yelp, or simulated air horn.

A.3.3.78 GAWR (Gross Axle Weight Rating). It is a requirement of the National Highway Traffic Safety Administration that the GAWR be posted in the vehicle on a permanently affixed label. The axle system includes, but is not limited to, the axle, tires, suspension, wheels, frame, brakes, and applied engine torque.

A.3.3.79 GCWR (Gross Combination Weight Rating). A combination vehicle is a tractor trailer–type vehicle having three or more axle systems (a multiaxle installation is one system). When the trailer is detachable, the GCWR limits the axle system(s) maximum load for any replacement trailer.

A.3.3.80 Grade. A 45 degree slope is equal to a 100 percent grade.

A.3.3.84 GVWR (Gross Vehicle Weight Rating). It is a requirement of the National Highway Traffic Safety Administration that the GVWR of a vehicle be posted in the vehicle on a permanently affixed label. The GVWR can be equal to or less than the sum of the front GAWR and the rear GAWR. The in-service weight or gross vehicle weight should always be equal to or less than the GVWR.

Copyright National Fire Protection Association
Provided by IHS under license with NFPA
No reproduction or networking permitted without license from IHS
Not for Resale

A.3.3.104 Maximum Pump Close-Off Pressure. Multistage series/parallel pumps are measured with the pump in the pressure (series) setting.

A.3.3.113 Net Pump Pressure. When operating from a hydrant, the net pump pressure typically is less than the discharge pressure. For example, if the discharge pressure gauge reads 150 psi (1034 kPa) and the intake (suction) gauge reads 20 psi (138 kPa), the net pump pressure equals 130 psi (896 kPa). When operating from draft, the net pump pressure will be above the discharge pressure. For example, if the discharge pressure gauge reads 145 psi (1000 kPa) and the intake (suction) gauge reads 10 in. Hg (34 kPa) vacuum, the net pump pressure will be 150 psi (1034 kPa) (1 in. Hg = 0.5 psi = 3.4 kPa).

A.3.3.120 Optical Source. An optical source can consist of a single optical element or a fixed array of any number of optical elements whose geometric positioning relative to each other is fixed by the manufacturer of the optical source and is not intended to be modified.

A.3.3.126 Portable Generator. The device has an integral distribution panel with overcurrent protection and receptacle outlets.

A.3.3.130 Preconnected Hose Line. A preconnected hose line is commonly called a bucket line, cross lay, or mattydale.

A.3.3.141 Quint. The primary purpose of this type of apparatus is to combat structural and associated fires, and to support fire fighting and rescue operations by positioning personnel-handling materials, providing continuous egress, or discharging water at positions elevated from the ground.

A.3.3.153 Special Services Fire Apparatus. These services could be rescue, command, hazardous material containment, air supply, electrical generation and floodlighting, or transportation of support equipment and personnel.

A.3.3.158 Standard Cubic Feet per Minute (SCFM). Standard temperature and pressure are 60°F (15°C) and 14.696 psi (29.92 in. Hg) [101.33 kPa (760 mm)].

A.3.3.166 Turning Clearance Radius. An aerial fire apparatus might have a larger overall clearance diameter if measured at a forwardmost point of the aerial device.

A.3.3.167 Turntable. Some turntables contain an operator's control station.

A.3.3.169 Type 4 Rating. Equipment rated NEMA Type 4 will be undamaged by the formation of ice on the equipment.

A.4.3.1 It is the responsibility of the purchaser to provide the contractor with sufficient information to enable the contractor to prepare a bid and a complete description of the apparatus the contractor proposes to supply. Completion of the Apparatus Purchasing Specification Form in Annex B should provide the information required in the various sections of this document.

A.4.9.1 The engine compartment and the underside of the vehicle are not considered areas of normal nonmaintenance operation.

A.4.10.2 All required signs, plates, and labels should be highly visible and placed on the vehicle where they are not subject to wear and tear damage.

A.4.11.1 The attachment of electric, air, hydraulic, and other control lines and hoses should be with removable mechanically attached fastening devices. The attachment of such equipment with adhesive or glue on clamps or clips has been found to be inadequate for long-term performance on fire apparatus. The use of plastic ties to bundle wire harnesses and hose are permissible but should not be used to attach such items to a cab, body, frame, or other major structure.

A.4.12.2.1 The distribution of the weight between the front and rear wheels should be a major consideration, because improper design will seriously affect the handling characteristics of the fire apparatus. Too little weight on the front wheels can cause a front-end skid and, over bumpy roads, could cause the front of the fire apparatus to veer from side to side. At the very least, it will be difficult to keep the fire apparatus under control. Too much weight on the front wheels will reduce the traction of the rear wheels and can result in a rear-end skid or difficulty in traveling over unpaved roads or in mud.

A.4.12.2.3.1 It is critical that the purchaser provide the manufacturer the equipment inventory and mounting locations for equipment on the apparatus. This should include existing equipment and estimated future equipment to be carried. The projections of total equipment payload and mounting locations are essential for proper engineering of a new fire apparatus. It is the responsibility of the purchaser to properly load the fire apparatus and place equipment to comply with the GVWR, the front-to-rear weight distribution, and the right-to-left load balance requirements of this standard.

A.4.12.2.3.3 The projections of total equipment payload and mounting locations are essential for proper engineering of a new fire apparatus. The purchaser of the fire apparatus should maintain the side-to-side loading requirement in 4.12.2.3.3 as equipment is loaded or installed on the apparatus.

The percentage difference should be calculated as shown in the following formula:

$$\frac{(\text{Heavier weight} - \text{Lighter weight})}{\text{Total weight}} \times 100 = \text{Percent difference}$$

A.4.13.1 The power generated by internal combustion engines can decrease with an increase in altitude. The loss varies with the type of engine, the fuel it uses, and the amount of air inlet supercharging. If the apparatus is going to be regularly used at elevations above 2000 ft (600 m), the manufacturer needs to know the operating elevation to provide an engine that will deliver proper performance. *(See Section 4.3.)*

A.4.13.2 Although the purchaser needs to specify grades in excess of 6 percent (*see Section 4.3*), the fire department should evaluate where the apparatus will be expected to operate in a stationary position on such grades. The occasional exposure to excessive grades while moving over roadways is different from prolonged stationary operations. Apparatus might require special lubrication systems for engines and other modifications to ensure the apparatus will not be damaged by operation on the increased grades.

A.4.13.3 The temperature conditions, either hot or cold, where the fire apparatus will be used or stored should be considered in the design of the fire apparatus. If the fire apparatus will be used in conditions that exceed 110°F (43°C), additional cooling of the engine, pump, and other components might be necessary. Likewise, if the unit is to be used or stored in subfreezing conditions, special system drains, engine heaters, or other special components might be required to prevent damage or to allow continued use.

Copyright National Fire Protection Association
Provided by IHS under license with NFPA
No reproduction or networking permitted without license from IHS
Not for Resale

A.4.14.1(2) Although this standard recognizes the need for the fire apparatus to be able to accelerate to a high speed while traveling on public roads, caution should be taken as to how fast the fire apparatus will travel. Consideration should be given to limiting the maximum speed the fire apparatus can obtain for safety.

Where fire apparatus has to operate off paved roads, all-wheel drive, a two-speed rear axle, an auxiliary transmission, an automatic transmission, or any combination of these might enhance the fire apparatus's off-road capability.

A.4.14.1(3) The purchaser should specify the performance required on grades in excess of 6 percent. The occasional exposure to excessive grades is different from an everyday occurrence. A combination of steep grades and narrow, winding roads might require consultation with manufacturers prior to finalizing the apparatus specifications and then the designation of special road tests. If apparatus will be subjected to a class of service not normally encountered, a manufacturer cannot be expected to anticipate the need without sufficient specification details.

A.4.14.2 Special fire service tire ratings could apply that are different from the sidewall rating on the tire. The purchaser might want to consider requesting the tire manufacturer's rating documentation.

A.4.15.1 Purchasers might want to specify that all routine lubricant and fluid level checks be performed from ground level to reduce the risks of injury from falling from apparatus.

A.4.17.1 Where the point of delivery is over 2000 ft (600 m) of elevation and a fire pump is provided, the pumping engine overload test described in 16.13.3 should be performed to ensure that the engine will develop adequate power at point of delivery. This test should be performed with the pump supplied from draft per Table 16.2.4.1(a), with the net pressure maintained at 165 psi (1100 kPa).

A.4.18 It is important for the purchaser and contractor to agree on the format in which the documentation is to be delivered. It is also important that the purchaser consider the long-term ramifications of the changing media technology if electronic format is used for delivery of the documentation. Software and hardware will need to be maintained over the years to utilize electronic documentation.

A.4.19.2.3(6)(g) The equivalent circuit logic could be described in several ways. It might be shown as an equivalent schematic, a word-based description, or a table. In any case, it should define the relationship between input status and output status.

A.4.19.2.4 Suppliers of components and equipment installed or supplied by the contractor often supply operations and maintenance documents with those components or equipment. This standard requires that the contractor pass along these documents to the purchaser. The purchaser should specify if multiple copies of these documents are required.

A.5.4 Fire departments should carefully evaluate their water supply needs and the available water delivery systems when considering water tank size. The minimum tank size of 300 gal (1100 L) might not meet the needs of the department. Fire departments servicing areas with wide hydrant spacing or areas with no hydrants should strongly consider increasing the water tank size. The department should choose a water tank size that will best support efficient and effective fireground operations.

A.5.5 Additional compartmentation might be required to accommodate the size, shape, and weight of special equipment. Any special equipment to be carried on the apparatus should be identified in the specifications so the apparatus manufacturer can ensure the equipment will be properly accommodated within the design of the apparatus.

A.5.6 Hose storage areas are not required to be contiguous. The purchaser should consider arrangements for hose storage that will best support their operational procedures. The purchaser should also consider specifying some type of cover for the hose compartment(s). Hinged or removable covers might be advantageous.

A.5.7 The recommended minimum equipment listed in this standard (nozzles, hose, ladders, etc.) might not maximize a community's grading by the insurance rating authority. Individual fire departments should check with the insurance rating authority for their state or jurisdiction for information on what tools and equipment should be carried to maximize their community's grading.

A.5.7.1.2 Where there are no ladder trucks in service, pumpers should normally be equipped with a 35 ft (10.7 m) extension ladder. It might be advantageous to standardize on the 35 ft (10.7 m) extension ladder, regardless of available ladder truck service. The purchaser should consider specifying an extension ladder length that will allow the ladder tip to extend a minimum of 2 ft (0.6 m) above or into a hazard area to be an accessible and visible emergency egress.

A.5.7.2.3 The size of the suction hose specified in Table 16.2.4.1(a) relates to pump certification only. Other sizes of suction hose, compatible with local operations, could be used and should be specified if they are desired.

A.5.8 See A.5.7.

A.5.8.2 Many departments now find it useful to use large diameter supply hose [4 in. (100 mm) or 5 in. (125 mm)] to effectively move water from its source to the fire scene. Fire departments serving areas with wide hydrant spacing or areas with no hydrants often find it desirable to carry additional hose.

It is recommended that the department carry at least 200 ft (60 m) of 2½ in. (65 mm) hose for handline operation. If the operations of the department are geared to using multiple large handlines from single apparatus, the department should consider carrying more 2½ in. (65 mm) hose and additional nozzles. Likewise, the amount and size of hose used to supply large stream devices should be considered in planning the amount and size of hose to be carried.

The department should evaluate its needs and choose the size and amount of hose that will best support its operation and then discuss those hose storage needs with the contractor to ensure the fire apparatus hose storage space will be properly laid out and of sufficient size to accommodate the department's needs.

A.5.8.3 The requirements of service in different communities might necessitate additions to the equipment required. The operational objective is to arrive at the scene of the emergency with the necessary equipment for immediate life safety operations and emergency control.

The mandatory miscellaneous equipment required to be carried on the pumper fire apparatus weighs approximately 600 lb (270 kg). This leaves a remaining capacity of approximately 1400 lb (640 kg) to 1900 lb (865 kg) depending on the volume of cabinetry for storage of optional equipment. The purchaser should advise the contractor if equipment in excess

Copyright National Fire Protection Association
Provided by IHS under license with NFPA
No reproduction or networking permitted without license from IHS
Not for Resale

of the allowance in Table 12.1 is to be carried so that the contractor can provide a chassis of sufficient size. *(See Sections 4.3 and 12.1.)*

The following additional equipment is recommended to be carried on pumper fire apparatus. The equipment list provided does not detail each item sufficiently for purchasing purpose. The purchaser should clarify the detailed specifications for these items.

(1) One fire service claw tool
(2) One smoke ejector, 5000 ft^3 min (140 m^3/min) minimum capacity, and, if the ejector is electrically driven, a suitable adapter cord to fit standard house "U" ground outlets and extension cords and outlets on line voltage power sources used in fire departments
(3) One crowbar [36 in. (1 m) minimum] with brackets
(4) One pair of insulated bolt cutters with 7⁄16 in. (11 mm) minimum cut
(5) One Halligan-type tool with brackets
(6) One 2½ in. (65 mm) hydrant valve (screw-type gate)
(7) One double-gated reducing leader wye, sized to fit hose used in department
(8) Two shovels (one pointed and one scoop)
(9) Four hose straps
(10) One 125 ft (38 m) length of utility rope having a breaking strength of at least 5000 lb (2200 kg)
(11) One 3000 W (minimum) portable generator if the apparatus does not have a fixed line voltage power source
(12) Two 500 W portable lights
(13) Two cord reels with minimum 200 ft (60 m) cord on each with connectors that are compatible with lights, generator, and smoke ejector
(14) One portable pump
(15) Toolbox with hammers, wrenches, screwdrivers, and other assorted tools
(16) Master stream appliance, 1000 gpm (4000 L/min) minimum
(17) Foam delivery equipment compatible with onboard foam system
(18) One hose clamp

A.6.4 Additional compartmentation might be required to accommodate the size, shape, and weight of special equipment. Any special equipment to be carried on the apparatus should be identified in the specifications, so the apparatus manufacturer can ensure the equipment will be properly accommodated within the design of the apparatus.

A.6.5 It should be recognized that apparatus of 500 gpm (2000 L/min) rated pump capacity or more normally require more than 300 ft (90 m) of 2½ in. (65 mm) hose to utilize their pumping capacity and their 2½ in. (65 mm) or larger discharge connections. For example, the 300 ft (90 m) load provides only 150 ft (45 m) lines from the two outlets of a 500 gpm (2000 L/min) apparatus. Experience has shown that, with large capacity pumps, 600 ft to 1000 ft (180 m to 300 m) of hose might be desirable to utilize the available pumping capacity. Additional hose capacity might also be desirable for pumps rated at less than 500 gpm (2000 L/min).

Hose storage areas are not required to be contiguous. The purchaser should consider arrangements for hose storage that will best support their operational procedures. The purchaser should also consider specifying some type of cover for the hose compartment(s). Hinged or removable covers might be advantageous.

A.6.6 The recommended minimum equipment listed in this standard (nozzles, hose, ladders, etc.) might not maximize a community's grading by the insurance rating authority. Individual fire departments should check with the insurance rating authority for their state or jurisdiction for information on what tools and equipment should be carried to maximize their community's grading.

A.6.6.2.3 The size of the suction hose specified in Table 16.2.4.1(a) relates to pump certification only. Other sizes of suction hose, compatible with local operations, could be used and should be specified if they are desired.

A.6.7 See A.6.6.

A.6.7.3 The requirements of service in different communities might necessitate additions to the equipment required. The operational objective is to arrive at the scene of the emergency with the necessary equipment for immediate life safety operations and emergency control.

The mandatory miscellaneous equipment required to be carried on the initial attack fire apparatus weighs approximately 350 lb (160 kg). This leaves a remaining capacity of approximately 550 lb (250 kg) for storage of optional equipment while staying within the allowance of 900 lb (410 kg) for the smallest GVWR chassis. The purchaser should advise the contractor if equipment in excess of the allowance in Table 12.1 is to be carried so that the contractor can provide a chassis of sufficient size. *(See Sections 4.3 and 12.1.)*

The following additional equipment is recommended to be carried on initial attack fire apparatus. The equipment list provided does not detail each item sufficiently for purchasing purpose. The purchaser should clarify the detailed specifications for these items.

(1) One 6 lb (2.7 kg) flathead axe
(2) One fire service claw tool
(3) One 8 ft (2.4 m) or longer pike pole
(4) One smoke ejector, 5000 ft^3/min (140 m^3/min) minimum capacity, and, if the ejector is electrically driven, a suitable adapter cord to fit standard house "U" ground outlets and extension cords and outlets on line voltage power sources used in fire departments
(5) One 10 ft (3 m) attic ladder, which should meet the requirements of NFPA 1931, *Standard on Design of and Design Verification Tests for Fire Department Ground Ladders*, and mounting brackets
(6) One crowbar [36 in. (1 m) minimum] with brackets
(7) One pair insulated bolt cutters with 7⁄16 in. (11 mm) minimum cut
(8) One Halligan-type tool with brackets
(9) One 2½ in. (65 mm) hydrant valve (screw-type gate)
(10) Two shovels (one pointed and one scoop)
(11) Two hose straps
(12) One 125 ft (38 m) length of utility rope having a breaking strength of at least 5000 lb (2200 kg)
(13) One 3000 W (minimum) portable generator if the apparatus does not have a fixed line voltage power source
(14) Two 500 W portable lights
(15) Two cord reels with minimum 200 ft (60 m) cord on each with connectors that are compatible with lights, generator, and smoke ejector
(16) Toolbox with hammers, wrenches, screwdrivers, and other assorted tools
(17) Foam delivery equipment compatible with onboard foam system
(18) One hose clamp

--`,,```,,,,````-`-`,,`,,`,`,,`---

Copyright National Fire Protection Association
Provided by IHS under license with NFPA
No reproduction or networking permitted without license from IHS
Not for Resale

A.7.4 Additional compartmentation might be required to accommodate the size, shape, and weight of special equipment. Any special equipment to be carried on the apparatus should be identified in the specifications so that the apparatus manufacturer can ensure the equipment will be properly accommodated within the design of the apparatus.

A.7.5.1 The purchaser might want to specify the location and the arrangement of the hose storage area to allow carrying the hose preconnected to the tank inlet.

The purchaser should consider specifying some type of cover for the hose compartment. Hinged or removable covers might be desirable.

A.7.6 The recommended minimum equipment listed in this standard (nozzles, hose, ladders, etc.) might not maximize a community's grading by the insurance rating authority. Individual fire departments should check with the insurance rating authority for their state or jurisdiction for information on what tools and equipment should be carried to maximize their community's grading.

A.7.6.3 The size of the suction hose specified in Table 16.2.4.1(a) relates to pump certification only. Other sizes of suction hose, compatible with local operations, could be used and should be specified if they are desired.

A.7.7 See A.7.6.

A.7.7.2.2 The purpose of a mobile water supply apparatus does not include attack fire fighting. However, if a pump is provided, the provisions of handlines will allow limited fire-fighting capability, particularly in protecting the apparatus if this becomes necessary.

A.7.7.3.1 The requirements of service in different communities might necessitate additions to the equipment required. The operational objective is to arrive at the scene of the emergency with the necessary equipment for immediate life safety operations and emergency control.

The mandatory miscellaneous equipment required to be carried on the mobile water supply fire apparatus weighs approximately 700 lb (320 kg). This leaves a remaining capacity of approximately 300 lb (135 kg) for storage of optional equipment while staying within the allowance of 1000 lb (455 kg). The purchaser should advise the contractor if equipment in excess of 1000 lb (455 kg) is to be carried so that the contractor can provide a chassis of sufficient size. *(See Sections 4.3 and 12.1.)*

The following additional equipment is recommended to be carried on mobile water supply apparatus. The equipment list provided does not detail each item sufficiently for purchasing purpose. The purchaser should clarify the detailed specifications for these items.

(1) One fire service claw tool
(2) One crowbar [36 in. (1 m) minimum] with brackets
(3) One pair of insulated bolt cutters with 7⁄16 in. (11 mm) minimum cut
(4) One Halligan-type tool with brackets
(5) One 2½ in. (65 mm) hydrant valve (screw-type gate)
(6) Two shovels (pointed, long handle)
(7) Four hose straps
(8) One 125 ft (38 m) length of utility rope having a breaking strength of at least 5000 lb (2200 kg)
(9) One portable pump
(10) One low-level strainer for use with portable tanks
(11) Toolbox with hammers, wrenches, screwdrivers, and other assorted tools
(12) One water transfer device to be used between portable tanks
(13) One 1500 gal (6000 L) (minimum) collapsible, portable tank

A.8.3 The purchaser should consider the department's need for hard or soft suction hose if a fire pump is installed and should specify the appropriate hose to meet this need.

A.8.5 Additional compartmentation might be required to accommodate the size, shape, and weight of special equipment. Any special equipment to be carried on the apparatus should be identified in the specifications so that the apparatus manufacturer can properly accommodate the equipment within the design of the apparatus.

A.8.6.1 If the aerial fire apparatus is to carry hose, the purchaser needs to specify the amount and size of hose to be carried and any special requirements for the location in which it is to be carried.

A.8.7 The recommended minimum equipment listed in this standard (nozzles, hose, ladders, etc.) might not maximize a community's grading by the insurance rating authority. Individual fire departments should check with the insurance rating authority for their state or jurisdiction for information on what tools and equipment should be carried to maximize their community's grading.

A.8.7.1 The fire department should study its needs for ground ladders, evaluating which ladders will be arriving at a fire scene with pumpers as well as aerial fire apparatus. Many communities have multiple three- and four-story buildings around which a power-operated aerial device cannot be positioned and that require longer or additional extension ladders to support fire-fighting operations. However, it should be recognized that as requirements for additional ground ladders are added, space for other equipment can become limited.

A.8.7.2 The following list could be used as a ground ladder complement:

(1) One attic ladder a minimum of 10 ft (3 m) in length
(2) Two roof ladders (with folding roof hooks) a minimum of 16 ft (4.9 m) in length
(3) One combination ladder a minimum of 14 ft (4.3 m) in length
(4) One extension ladder a minimum of 24 ft (7.3 m) in length
(5) One extension ladder a minimum of 35 ft (10.7 m) in length

A.8.8 See A.8.7.

A.8.8.2 Axes and long-handled ventilation, salvage, and overhaul poles are now available with wood, fiberglass, or plastic handles. The fire department should specify the handle material desired.

The requirements of service in different communities might necessitate additions to the equipment required. The operational objective is to arrive at the scene of the emergency with the necessary equipment for immediate life safety operations and emergency control.

The mandatory miscellaneous equipment required to be carried on the aerial fire apparatus weighs approximately 1000 lb (455 kg). This leaves a remaining capacity of approximately 1500 lb (680 kg) for storage of optional equipment while staying within the allowance of 2500 lb (1135 kg). The purchaser should advise the contractor if equipment in excess of 2500 lb (1135 kg) is to be carried so that the contractor can provide a chassis of sufficient size. *(See Sections 4.3 and 12.1.)*

--`,,```,,,,````-`-`,,`,,`,`,,`---
Copyright National Fire Protection Association
Provided by IHS under license with NFPA
No reproduction or networking permitted without license from IHS
Not for Resale

The following additional equipment is recommended to be carried on aerial fire apparatus. The equipment list provided does not detail each item sufficiently for purchasing purpose. The purchaser should clarify the detailed specifications for these items.

(1) Three portable floodlights (500 W)
(2) Two shovels (round point)
(3) Two electric cord reels with 200 ft (60 m) of 12 AWG, 3-wire cord with connectors that are compatible with lights, smoke ejectors, and onboard generators
(4) Three 2-wire to 3-wire adapters
(5) One smoke ejector, 5000 ft^3/min (140 m^3/min) minimum capacity, and, if ejector is electrically driven, suitable adapter cord to fit standard house "U" ground outlets and extension cords and outlets on line voltage power sources used in fire departments
(6) Two 10 ton (9000 kg) hydraulic jacks
(7) Two 20 ton (18,000 kg) hydraulic jacks
(8) One pair of insulated wire cutters capable of cutting 6 AWG wire
(9) Four additional salvage covers, at least 12 ft × 18 ft (3.6 m × 5.5 m)
(10) Two floor runners, at least 3 ft × 18 ft (1 m × 5.5 m)
(11) Four mops
(12) Four brooms
(13) Four squeegees with handles
(14) Two mop wringers with buckets
(15) One roll 15 lb (6.8 kg) tar paper or plastic sheeting at least 8 mil thick
(16) Twelve standard sprinkler heads (assorted temperatures and types)
(17) Two claw hammers, each with assorted nails
(18) One heavy-duty stapler
(19) Six sprinkler stops or wedges
(20) One set of sprinkler head wrenches for the type of heads carried
(21) Two pairs of safety goggles
(22) One power saw (chain or heavy-duty rotary type)
(23) Four assorted handsaws
(24) One portable thermal cutting unit designed for cutting metal
(25) One rescue-type tool with extension rams and assorted lengths of chain
(26) One set of air bags
(27) One power-operated deodorizer unit
(28) One water pickup vacuum
(29) Assorted rolls of tape (duct tape, electrical tape, cellophane tape, etc.)
(30) One pneumatic rescue cushion
(31) One stokes basket
(32) One gas shutoff wrench
(33) One submersible-type pump
(34) Two pairs of lineman's gloves with leather glove protectors
(35) Four bale/mattress hooks
(36) Two four-tine forks
(37) Two blankets
(38) One block and tackle.
(39) One life gun with ammunition
(40) One water shutoff wrench

A.9.5 Additional compartmentation might be required to accommodate the size, shape, and weight of special equipment. Any special equipment to be carried on the apparatus should be identified in the specifications so that the apparatus manufacturer can ensure the equipment will be properly accommodated within the design of the apparatus.

A.9.6 Many departments now find it useful to use large diameter supply hose [4 in. or 5 in. (100 mm or 125 mm)] to effectively move water from its source to the fire scene. Fire departments serving areas with wide hydrant spacing or areas with no hydrants often find it advantageous to carry additional hose. The hose storage area provided for in this standard is a minimum to accommodate the smallest size of the amount of hose required to be carried. The department should evaluate its needs and choose the size and amount of hose that will best support its operation and then discuss those hose storage needs with the contractor to ensure the fire apparatus hose storage space will be properly laid out and of sufficient size to accommodate the department's needs.

Hose storage areas are not required to be contiguous. The purchaser should consider arrangements for hose storage that will best support their operational procedures. The purchaser should also consider specifying some type of cover for the hose compartment(s). Hinged or removable covers might be desirable.

A.9.7 The recommended minimum equipment listed in this standard (nozzles, hose, ladders, etc.) might not maximize a community's grading by the insurance rating authority. Individual fire departments should check with the insurance rating authority for their state or jurisdiction for information on what tools and equipment should be carried to maximize their community's grading.

A.9.7.2.3 The size of the suction hose specified in Table 16.2.4.1(a) relates to pump certification only. Other sizes of suction hose, compatible with local operations, could be used and should be specified if they are desired.

A.9.8 See A.9.7.

A.9.8.2 It is recommended that the department carry at least 200 ft (60 m) of 2½ in. (65 mm) hose for handline operation. If the operations of the department are geared to using multiple large handlines from single apparatus, the department should consider carrying more 2½ in. (65 mm) hose and additional nozzles. Likewise, the amount and size of hose used to supply large stream devices should be considered in planning the amount and size of hose to be carried.

A.9.8.3 The requirements of service in different communities might necessitate additions to the equipment required. The operational objective is to arrive at the scene of the emergency with the necessary equipment for immediate life safety operations and emergency control.

The mandatory miscellaneous equipment required to be carried on the quint fire apparatus weighs approximately 700 lb (318 kg). This leaves a remaining capacity of approximately 1800 lb (817 kg) for storage of optional equipment while staying within the allowance of 2500 lb (1135 kg). The list of equipment required to be carried on a quint contains all the equipment required on a pumper as well as life safety rope. It is recommended that the purchaser review the list of equipment required to be carried on an aerial fire apparatus *(see 8.8.2)* as well as the lists in A.5.8.3 and A.8.8.2 for other tools and equipment needed to meet the functional objectives for which the quint is being purchased. The purchaser should advise the contractor if equipment in excess of 2500 lb (1135 kg) is to be carried so that the contractor can provide a chassis of sufficient size. *(See Sections 4.3 and 12.1.)*

A.10.3 Additional compartmentation might be required to accommodate the size, shape, and weight of special equipment.

Copyright National Fire Protection Association
Provided by IHS under license with NFPA
No reproduction or networking permitted without license from IHS
Not for Resale

Any special equipment to be carried on the apparatus should be identified in the specifications so that the apparatus manufacturer can ensure the equipment will be properly accommodated within the design of the apparatus.

A.10.4 The recommended minimum equipment listed in this standard (nozzles, hose, ladders, etc.) might not maximize a community's grading by the insurance rating authority. Individual fire departments should check with the insurance rating authority for their state or jurisdiction for information on what tools and equipment should be carried to maximize their community's grading.

A.10.4.2.3 The size of the suction hose specified in Table 16.2.4.1(a) relates to pump certification only. Other sizes of suction hose, compatible with local operations, could be used and should be specified if they are desired.

A.10.5 See A.10.4.

A.10.5.2 The mandatory miscellaneous equipment required to be carried on a special service fire apparatus weighs approximately 200 lb (90 kg). This leaves a remaining capacity of approximately 1800 lb (820 kg) for storage of optional equipment while staying within the allowance of 2000 lb (910 kg) for the smallest GVWR chassis. The purchaser should advise the contractor if equipment in excess of the allowance in Table 12.1 is to be carried so that the contractor can provide a chassis of sufficient size. *(See Sections 4.3 and 12.1.)*

Special service fire apparatus can be designed to provide a wide variety of support functions (rescue, command, hazardous material containment, air services, electrical generation and floodlighting, and transportation of support equipment and personnel). Because of this variety, the required list of equipment is minimal and the purchaser needs to develop an appropriate equipment list based on a review of the functions and operations that the apparatus will be expected to support.

The following two lists of equipment are provided for consideration where a fire apparatus is to support rescue operations and hazardous materials containment operations. The equipment lists provided do not detail each item sufficiently for purchasing purpose. The purchaser should clarify the detailed specifications for these items.

The equipment on the following list should be considered when deciding what to carry on a rescue apparatus:

(1) 500 ft (150 m) of plastic "Emergency Scene" or equivalent crowd control tape
(2) Forty-eight 30-minute road flares
(3) Twelve road hazard traffic control devices
(4) One 6 lb (2.7 kg) flathead axe
(5) One 6 lb (2.7 kg) pickhead axe
(6) One 6 ft (2 m) pike pole or plaster hook
(7) One 8 ft (2.4 m) or longer nonconductive pike pole
(8) One crowbar [36 in. (1 m) minimum] with brackets
(9) One pair of insulated bolt cutters with 7⁄16 in. (11 mm) minimum cut
(10) One Halligan-type tool with brackets
(11) Two shovels (one pointed and one scoop)
(12) Two 12 lb (5.4 kg) sledgehammers
(13) Two Class I life safety harnesses meeting the requirements of NFPA 1983, *Standard on Fire Service Life Safety Rope and System Components*
(14) One 150 ft (45 m) length of general-use life safety rope meeting the requirements of NFPA 1983
(15) One 150 ft (45 m) length of light-use life safety rope meeting the requirements of NFPA 1983
(16) One 150 ft (45 m) length of utility rope having a breaking strength of at least 5000 lb (2200 kg)
(17) One box of tools to include the following:
  (a) One hacksaw with three blades
  (b) One keyhole saw
  (c) One 18 in. (450 mm) pipe wrench
  (d) One hammer
  (e) One pair of tin snips
  (f) One pair of pliers
  (g) One pair of lineman's pliers
  (h) Assorted types and sizes of screwdrivers
  (i) Assorted adjustable wrenches
  (j) Assorted combination wrenches
(18) Two salvage covers, each a minimum of 12 ft × 14 ft (3.7 m × 4.3 m)
(19) One 4000 W (minimum) portable generator if the apparatus does not have a fixed line voltage power source
(20) Two 500 W portable lights
(21) Two cord reels with minimum 125 ft (38 m) of 10 AWG, 3-wire cord on each with connections that are compatible with lights and generator
(22) One smoke ejector, 5000 ft^3/min (140 m^3/min) minimum capacity, and, if the ejector is electrically driven, suitable adapter cord to fit standard house "U" ground outlets and extension cords and outlets on line voltage power sources used in fire departments
(23) Two 10 ton (9000 kg) hydraulic jacks
(24) Two 20 ton (18,000 kg) hydraulic jacks
(25) One roll 15 lb (6.8 kg) tar paper or plastic sheeting at least 8 mil (0.203 mm) thick
(26) Two pairs of safety goggles
(27) One power saw (chain or heavy-duty rotary type)
(28) Four assorted handsaws
(29) One portable cutting device
(30) Resuscitator equipment with oxygen administration capability and spare cylinders, which should be compatible with the performance of cardiopulmonary resuscitation
(31) One powered rescue tool capable of cutting and spreading with associated accessory equipment
(32) Shoring of various sizes and lengths
(33) One 10 ft (3 m) and one 15 ft (4.5 m) log chain with hooks
(34) One 4 ton (3500 kg) minimum hydraulic porta-power kit
(35) One set of air bags
(36) Assorted rolls of tape (duct tape, electrical tape, cellophane tape, etc.)
(37) One stokes basket
(38) One gas shutoff wrench
(39) Two pairs of lineman's gloves with leather glove protectors
(40) Two blankets
(41) One block and tackle

Equipment on the following list should be considered if the primary use of the apparatus is for hazardous material containment:

(1) One copy of U.S. DOT *North American Emergency Response Guidebook*, current edition
(2) One copy of U.S. Coast Guard *Chemical Hazard Response Information System (CHRIS)* manual or equivalent reference guide
(3) One copy of American Association of Railroads *Emergency Action Guide* or equivalent reference guide
(4) One NFPA *Fire Protection Guide to Hazardous Materials* or equivalent reference guide
(5) Two pairs of binoculars

Copyright National Fire Protection Association
Provided by IHS under license with NFPA
No reproduction or networking permitted without license from IHS
Not for Resale

(6) One gas detection instrument that complies with OSHA standards
(7) One radiation-monitoring instrument
(8) One pH test kit
(9) One colorimetric chemical detector tube kit with 20-chemical minimum detection capability
(10) Six vapor-protective suits meeting the requirements of NFPA 1991, *Standard on Vapor-Protective Ensembles for Hazardous Materials Emergencies*
(11) Twelve liquid splash–protective suits meeting the requirements of NFPA 1992, *Standard on Liquid Splash-Protective Ensembles and Clothing for Hazardous Materials Emergencies*
(12) Twenty-four pairs of disposable boot covers
(13) Twenty-four pairs of disposable glove liners or inner gloves
(14) Forty-eight pairs of disposable chemical protective gloves of three different materials as a minimum
(15) Six additional SCBA complying with NFPA 1981, *Standard on Open-Circuit Self-Contained Breathing Apparatus for Fire and Emergency Services*
(16) One spare SCBA cylinder for each SCBA
(17) Ten traffic cones, 18 in. (0.5 m) minimum height
(18) Four rolls 1000 ft × 3 in. (300 m × 76 mm) banner tape
(19) Two rolls 6 mil (0.152 mm) minimum 10 ft × 100 ft (3 m × 30 m) plastic sheeting
(20) Two rolls 2 in. (51 mm) wide duct tape
(21) Two decontamination containment pools
(22) One decontamination shower
(23) Two 50 ft (15 m) lengths of heavy-duty garden hose with adapters for connection to a fire pump
(24) Two spray nozzles with garden hose thread
(25) Four 30 gal (100 L) open-top containers with sealed covers
(26) Four long-handle scrub brushes
(27) Twenty 50 gal (190 L) capacity heavy-duty garbage bags
(28) One assortment decontamination solution
(29) Four round point shovels
(30) Four portable explosionproof hand lights with mounting brackets
(31) Four nonspark, plastic, square point shovels
(32) One 6 lb (2.7 kg) flathead axe or forcible entry tool
(33) Two street brooms
(34) Two floor squeegees with handles
(35) One 6 lb (2.7 kg) sledgehammer
(36) Two nonspark bung wrenches
(37) One gas shutoff wrench
(38) One pair 24 in. (0.6 m) bolt cutters
(39) One drum upender
(40) One nonspark 28 in. (0.7 m) crowbar
(41) One plug and patch kit
(42) One tool box (wrenches, sockets, screwdrivers; minimum 100 units)
(43) Six MC #306/DOT #406 dome clamps
(44) 400 pads 18 in. × 18 in. × ⅜ in. (450 mm × 450 mm × 9.5 mm) hydrophobic polypropylene-type absorbents
(45) 150 lb (68 kg) of dry granular or loose absorbent in ruptureproof 5 gal (19 L) containers that can be disposed of by approved methods
(46) Four 10 ft (3 m) sorbent booms
(47) 50 lb (22.7 kg) dry "lime" in ruptureproof 5 gal (19 L) containers
(48) One manually operated product transfer pump with minimum 15 gpm (57 L/min) capacity and appropriate hose
(49) One 55 gal (208 L) drum (UN-1A2)
(50) One 85 gal (322 L) drum (UN-1A2)

A.11.6 Additional compartmentation might be required to accommodate the size, shape, and weight of special equipment. Any special equipment to be carried on the apparatus should be identified in the specifications so that the apparatus manufacturer can ensure the equipment will be properly accommodated within the design of the apparatus.

A.11.7 Many departments now find it useful to use large diameter supply hose [4 in. or 5 in. (100 mm or 125 mm)] to effectively move water from its source to the fire scene. Fire departments serving areas with wide hydrant spacing or areas with no hydrants often find it desirable to carry additional hose. The hose storage area provided for in this standard is a minimum to accommodate the smallest size of the amount of hose required to be carried. The department should evaluate its needs and choose the size and amount of hose that will best support its operation and then discuss those hose storage needs with the contractor to ensure that the fire apparatus hose storage space will be properly laid out and of sufficient size to accommodate the department's needs.

Hose storage areas are not required to be contiguous. The purchaser should consider arrangements for hose storage that will best support their operational procedures. The purchaser should also consider specifying some type of cover for the hose compartment(s). Hinged or removable covers might be advantageous.

A.11.8 The recommended minimum equipment listed in this standard (nozzles, hose, ladders, etc.) might not maximize a community's grading by the insurance rating authority. Individual fire departments should check with the insurance rating authority for their state or jurisdiction for information on what tools and equipment should be carried to maximize their community's grading.

A.11.8.1.3 The size of the suction hose specified in Table 16.2.4.1(a) and Table 18.2.4.1(a) relates to pump certification only. Other sizes of suction hose, compatible with local operations, could be used and should be specified if they are desired.

A.11.9 See A.11.8.

A.11.9.2 It is recommended that the department carry at least 200 ft (60 m) of 2½ in. (65 mm) hose for handline operation. If the operations of the department are geared to using multiple large handlines from single apparatus, the department should consider carrying more 2½ in. (65 mm) hose and additional nozzles. Likewise, the amount and size of hose used to supply large stream devices should be considered in planning the amount and size of hose to be carried.

A.11.9.3 The requirements of service in different communities might necessitate additions to the equipment required. The operational objective is to arrive at the scene of the emergency with the necessary equipment for immediate life safety operations and emergency control.

The mandatory miscellaneous equipment required to be carried on the mobile foam fire apparatus weighs approximately 700 lb (320 kg). This leaves a remaining capacity of approximately 1300 lb (590 kg) for storage of optional equipment while staying within the allowance of 2000 lb (910 kg). The purchaser should advise the contractor if equipment in excess of 2000 lb (910 kg) is to be carried so that the contractor can provide a chassis of sufficient size. *(See Sections 4.3 and 12.1.)*

Copyright National Fire Protection Association
Provided by IHS under license with NFPA
No reproduction or networking permitted without license from IHS
Not for Resale

A.12.1 The carrying capacity of a vehicle is one of the least understood features of design and one of the most important. All vehicles are designed for a maximum GVWR or maximum total weight, which should not be exceeded by the apparatus manufacturer or by the purchaser after the vehicle has been placed in service. For tractor-drawn vehicles, the in-service weight of the apparatus should not exceed the GCWR. There are many factors that make up the rated GVWR, including the design of the springs or suspension system, the rated axle capacity, the rated tire and wheel loading, and the distribution of the weight between the front and rear wheels.

Water Tank. One of the most critical factors is the size of the water tank. Water weighs approximately 8.3 lb/gal (1 kg/L). A value of 10 lb/gal (1.2 kg/L) can be used when estimating the weight of the tank and its water, making a 500 gal (2000 L) tank and its water about 2.5 tons (2400 kg).

Miscellaneous Equipment. If the finished apparatus is not to be overloaded, the purchaser should provide the contractor with the weight of equipment to be carried if it is in excess of the allowance shown in Table 12.1. *(See Section 4.3).*

Large Compartment Capacity. The manufacturer is only obligated by the standard to provide a miscellaneous equipment allowance in compliance with the minimum allowance listed in Table 12.1. Purchasers who specify vehicles with large compartment capacity should work closely with the vehicle manufacturer to ensure that the GVWR is sufficient to carry the intended equipment. A vehicle with average compartment loading will have a miscellaneous equipment weight of about 8 lb/ft^3 (125 kg/m^3) of compartment space available for miscellaneous equipment. A very lightly loaded vehicle could have as little as 4 lb/ft^3 (65 kg/m^3). A heavily loaded vehicle can reach 12 lb/ft^3 (200 kg/m^3). This volume does not include space occupied by generators, reels, air systems, ladders, hose, and so forth, that are not in the miscellaneous equipment allowance. Total equipment weight varies significantly depending on the density of the equipment and how tightly the fire department chooses to pack it.

Overloading. Overloading of the vehicle by the manufacturer through design or by the purchaser adding a great deal of equipment after the vehicle is in service will materially reduce the life of the vehicle and will undoubtedly result in increased maintenance costs, particularly with respect to the transmissions, clutches, and brakes. Overloading can also seriously affect handling characteristics, making steering particularly difficult.

Underloading. Brake equipment on heavy vehicles can be sensitive to the weight distribution of the vehicle. Specifying a GVWR significantly greater than the intended in-service weight can lead to poor brake performance, chatter, and squeal. Purchasers who specify configurations with limited compartment volume on a high capacity chassis should consult the manufacturer to ensure that a vehicle with an underloaded condition will not result.

Fire apparatus should be able to perform its intended service under adverse conditions that might require operation off paved streets or roads. Chassis components should be selected with the rigors of service in mind.

A.12.1.2 A weight of 250 lb (114 kg) for a fully equipped fire fighter is used elsewhere in NFPA standards. The 200 lb (90 kg) per person used here does not include the weight of SCBA and tools carried by a fire fighter, because the weight of this equipment is accounted for elsewhere.

A.12.1.4.1 It is important for fire apparatus drivers to understand the height, length, and weight of the vehicle compared to their personally owned vehicles. It is also important that this information be accurate. Because the height of the apparatus could change after delivery, depending on what equipment might be added, the fire department must note such changes on the plate. Suggested wording for the plate is shown in Figure A.12.1.4.1.

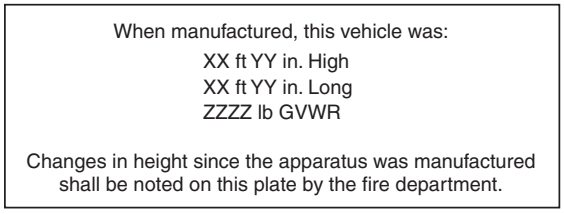

FIGURE A.12.1.4.1 Suggested Plate Showing Dimensions of Fire Apparatus.

A.12.2.1 The standard does not contain any minimum for size of engine because the size of the engine needs to be chosen to correspond with the conditions of design and service.

Many fire departments have favored high-torque low-speed engines for fire department service because such engines have good performance characteristics both when powering the apparatus through city traffic and when driving the pump. However, high-speed engines are frequently employed for fire apparatus, particularly in the case of commercial vehicle chassis. Where high-speed gasoline engines are selected for use in fire apparatus that might have to operate off paved highways, it is recommended that either a two-speed rear axle with high numerical ratio in low range or an auxiliary transmission be specified.

A.12.2.1.1 The maximum governed speed is established by the engine manufacturer as a safe limit of engine speed. The governor or electronic fuel control system should prevent the engine from exceeding the safe speed. Most engine manufacturers allow a plus tolerance of 2 percent for maximum governed speed.

A.12.2.1.3 A shutdown beyond the control of the pump operator during fire-fighting operations can result in loss of water flow from the pump that could severely endanger personnel. Automatic fuel line safety shutoff as required by DOT regulations is not considered an automatic engine shutdown.

A.12.2.1.4.1 An increase in engine speed provides increased alternator output, increased engine cooling, increased air conditioner output, and increased output or performance from other devices that derive their power from the chassis engine.

A.12.2.1.4.2 The intent of the interlock is to ensure that the chassis engine speed cannot be advanced without disengaging the driving wheels of the apparatus either at the transmission (having it in park or neutral) or by having a split shaft PTO fully engaged in the correct position to drive the component.

A.12.2.2.1 Where a regular production model commercial chassis is used, it is recommended that the heavy-duty radiator option be included when such is available. Radiators with bolted top and bottom tanks and removable side braces, if available, are considered preferable. Optional features that might be desirable include a coolant conditioner, radiator sight gauges, and automatic radiator shutters, any of which if used should be of a type approved by the engine manufacturer.

Copyright National Fire Protection Association
Provided by IHS under license with NFPA
No reproduction or networking permitted without license from IHS
Not for Resale

Where local environmental extremes exist — that is, high humidity and temperatures or extreme low temperatures — the purchaser should specifically state under what environmental conditions the apparatus is expected to operate.

A.12.2.3.1 Full flow oil filters are mandatory with some diesel engines.

A.12.2.4.1 A manual emergency engine shutdown might be provided in addition to the normal engine shutoff switch. It could be of the type that will close off either the air supply or the exhaust gas flow of the engine. The activation mechanism should be provided with a guard and marked with a sign that reads "Emergency Shutdown." Provisions to prevent restarting of the engine without a special reset procedure should be included.

A.12.2.4.1.1.1 Caution needs to be used because air intake filters might affect the engine manufacturer's air restriction requirements.

A.12.2.4.1.1.3 The extent to which air inlet protection is required could depend on specific fire department operations. Departments operating in ember-rich environments such as wildland fires should consider specifying a multiscreen ember separator capable of meeting the performance criteria in accordance with LF 1093-90, *Ember Separation Test Procedure*, published by Parker Hannifin, Racor Division, or an equivalent test. Purchasers of apparatus utilizing commercial chassis should be aware that to meet this specification, the manufacturer may need to add a screen and housing externally mounted on or around the commercial chassis hood or the bumper extension.

A.12.2.4.1.2 To prevent engine shutdown due to fuel contamination, dual filters in parallel, with proper valving so that each filter can be used separately, might be preferable. The purchaser should specify if dual filters are desired. Installation of two or more pumps should be designed so that failure of one pump will not nullify the performance of the other pump(s). It should be remembered that commercial vehicles are designed for over-the-road operation, and the fuel system and battery are at least partially cooled by the flow of air resulting from the motion.

A.12.2.4.1.3.1 With the use of diesel engines, the concern for vapor lock common with gasoline engines does not exist, and electric fuel pumps usually are not compatible for connection in series with a diesel engine fuel system. As a result, when an electric fuel pump is specified with a diesel engine, it is arranged as a fuel priming pump only. When not properly marked with a label or when the control valves are not properly set, the auxiliary priming system can cause the diesel engine to lose its prime. In addition, operation of a priming pump during diesel engine operation can boost fuel inlet pressure to the engine's fuel system. This could cause erratic engine behavior and loss of engine speed control. Control systems for priming pumps should allow only momentary operation and prevent the operation of the pump while the engine is operating.

A.12.2.4.2.1.3 See A.12.2.4.1.1.3.

A.12.2.5.1 Emissions from exhaust discharge pipes should be directed away from any fire-fighting tools because such emissions contain an oily substance that could make the tools difficult to handle and possibly dangerous to use.

A.12.3.1.5 Adequate braking capacity is essential for the safe operation of fire apparatus. While this subject is normally covered in state highway regulations, it should be noted that fire apparatus might have a special problem compared with normal vehicles of the same gross vehicle weight. Fire apparatus could be required to make successive brake applications in a short period of time when attempting to respond to alarms with minimum loss of time. Thus, the problem of brake "fade" and braking capacity could be critical unless the brakes provided take into account the service requirements. Air-actuated brakes are recommended for fire service vehicles of over 25,000 lb (11,000 kg) GVWR.

Where air brakes are provided, it is important that they be of a quick buildup type with dual tanks and a pressure-regulating valve. The rated compressor capacity should be not less than 12 ft^3/min (0.34 m^3/min) for this class of service. Air brakes require attention to guard against condensation in the air lines, such as might occur in areas subject to changes in climate that affect the moisture content of the air. Automatic moisture ejection of nonfreezing type is recommended. Air pressure drop should be limited to normal air losses. The presence of either of the following conditions indicates the need for immediate service:

(1) Air brake pressure drop of more than 2 psi (14 kPa) in 1 minute for single vehicles or more than 3 psi (21 kPa) in 1 minute for vehicle combinations, with the engine stopped and the service brakes released
(2) Air pressure drop of more than 3 psi (21 kPa) in 1 minute for single vehicles or more than 4 psi (28 kPa) in 1 minute for vehicle combinations, with the engine stopped and the service brakes fully applied

A.12.3.1.5.2 If an onboard automatic electric compressor is provided, it might be low voltage or line voltage driven. If it is low voltage driven, it is important that the required battery conditioner or charger be utilized. The shoreline receptacle might be a manual disconnect–type receptacle or an automatic ejection–type receptacle.

A.12.3.1.6 There have been occurrences of the driver becoming disabled while driving a fire apparatus. The purchasers might want to specify the placement of the parking brake control to a location where it can be reached from the officer's seat or require a second control so the officer can stop the vehicle if the driver becomes disabled.

A.12.3.1.7 Purchasers of apparatus should consider equipping the apparatus with an auxiliary braking system. Fire apparatus commonly make repeated stops from high speeds that cause rapid brake lining wear and brake fade, sometimes leading to accidents.

Auxiliary braking systems are recommended on apparatus that are exposed regularly to steep or long grades, are operating in congested areas where repeated stops are normal, or are responding to a high number of emergencies.

Examples of auxiliary braking systems include engine retarders, transmission retarders, exhaust retarders, and driveline retarders. These devices have various levels of effectiveness on braking. In addition, the systems can be activated by various means and settings, both automatic and manual in operation. The purchaser should carefully evaluate all auxiliary braking systems based on truck weight, terrain, duty cycle, and many other factors.

Some auxiliary braking devices should be disconnected when the apparatus is operated on slippery surfaces. Follow the auxiliary braking device manufacturer's recommendations for proper instructions.

Copyright National Fire Protection Association
Provided by IHS under license with NFPA
No reproduction or networking permitted without license from IHS
Not for Resale

A.12.3.2.1 Fire departments with vehicles that could be subject to continuous long-distance driving need to specify tire rating for continuous operation in place of intermittent operation.

A.12.3.2.3 The angle of approach or departure affects the road clearance of the vehicle going over short steep grades such as would be found in a driveway entrance, crossing a high crowned road at a right angle, or in off-road service. Too low an angle of approach or departure will result in the apparatus scraping the ground. Figure A.12.3.2.3 shows the method of determining the angle of departure. The angle of approach (front of vehicle) is measured in the same fashion.

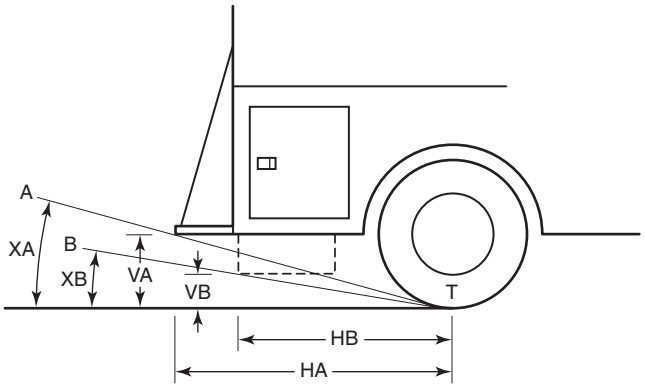

FIGURE A.12.3.2.3 Dimensions for Determining Angle of Departure.

In Figure A.12.3.2.3, the line *AT* represents the circumstance in which the tailboard is the determining lowest point. The line *BT* represents a circumstance in which the tailboard is not the lowest point (in this case, the lowest point is a fuel tank). The angle of departure is shown as *XA* or *XB*. To determine the angle of departure, place a thin steel strip against the rear of the tires where they touch the ground or stretch a string tight from one rear tire to the other at the rear of where they touch the ground. Determine the lowest point (the tailboard, fuel tank, or other equipment or component) that would make the smallest angle of departure. Hang a plumb bob from the lowest point and mark the point on the ground where the point of the plumb bob touches. Measure the vertical distance from the ground to the point where the plumb bob was hung (distance *V*). Measure the horizontal distance from the plumb bob point to the front of the steel strip or to the string running from rear tire to rear tire (distance *H*). Divide the vertical distance (*V*) by the horizontal distance (*H*). The ratio of *V/H* is the tangent of the angle of departure. If this ratio is known, the angle of departure can be determined from a table of trigonometric functions of angles or from a math calculator. The standard requires a minimum angle of departure of 8 degrees; since the tangent of 8 degrees is 0.1405, if *V* divided by *H* is 0.1405 or larger, the angle of departure is 8 degrees or greater.

A.12.3.3 Where automatic transmissions are used, the power takeoff applications could present problems, especially where dual PTO drives are required. In some instances, the PTO drive can be engaged only in torque converter range with resultant chances of overheating with prolonged use. If high engine rpm occurs, there is the possibility, if the vehicle is accidentally left in gear, of the output torque overcoming the parking brake and moving the vehicle. Proper operational instructions are essential with automatic transmissions.

A.12.3.4.1 Where a large-capacity fuel tank is desired, as in the case of apparatus designed for rural service, the capacity should be specified by the purchaser.

A.12.3.5 If the purchaser wants the hooks or rings to be accessible without having to open compartment doors, the specifications should state that fact.

A.13.1 This chapter defines the requirements for alternators, batteries, load management, and instrumentation to detect incipient electrical system failure. The intent is to require an electrical system that will operate the apparatus using power supplied by the alternator, shed nonessential electrical loads where necessary, and provide early warning of electrical failure in time to permit corrective action.

A.13.2.1 The 125 percent requirement for wiring and circuits is intended to provide end users a minimum amount of extra electrical circuit capacity. It is not the intent of this requirement to have the final-stage manufacturer replace the standard OEM chassis manufacturer's wiring to meet the 125 percent requirement. It is also not the intent of this requirement to have electrical accessories purchased by the apparatus manufacturer rewired to meet the 125 percent requirement. Electrical device manufacturer–supplied wiring can be used to the point where it connects to apparatus manufacturer's installed wiring.

A.13.2.6 It is the intent of 13.2.6 to provide a unique means of identifying a wire or circuit to prevent confusing it with another wire or circuit if electrical system repairs become necessary. If a color coding scheme is used instead of some other unique identification, that color should not be reused for a wire in any unrelated circuits within the same harness. However, 13.2.6 covers low voltage wiring only and does not apply to shielded cables commonly used for communication purposes or wiring used in line voltage circuits.

A.13.3.2 The minimum alternator size is developed using the loads required to meet the minimum continuous electrical load. Most apparatus will actually have loads exceeding the minimum requirements of this standard. The purchaser should review the maximum current output of the alternator versus the load study supplied for the apparatus from the manufacturer for on-scene and responding modes.

A.13.3.3(7) The purchaser should analyze the electrical loads that need to be maintained to fulfill the mission of the apparatus and define those loads for the manufacturer of the apparatus. The purchaser needs to understand, however, that there is a limit to the output capacity of an alternator system on the apparatus's engine and that this standard requires that the apparatus be capable of maintaining the minimum continuous electrical load under the conditions defined in 13.3.2. When that load is exceeded and larger alternators are not available, the purchaser and the manufacturer need to work together to determine how to reduce the minimum continuous electrical load to that which can be sustained under the conditions defined in 13.3.2.

A.13.3.4 The unexpected shutdown of a fire apparatus at a fire can place fire fighters in mortal danger and seriously impact the fire attack. With computer-controlled engines and transmissions as well as electric valves and other controls, an electrical system failure could result in an immediate and total shutdown of the apparatus. The low voltage monitoring system is intended to provide an early warning of an impending electrical failure and provide enough time to permit operator intervention.

Copyright National Fire Protection Association
Provided by IHS under license with NFPA
No reproduction or networking permitted without license from IHS
Not for Resale

A.13.3.6.1 Reduced crew sizes have forced the apparatus operator to assume many new fireground tasks in addition to that of operating apparatus. Even if the operator is at the apparatus, he or she is too busy with higher priority tasks to pay much attention to monitoring the condition of the electrical system.

Electrical loads on modern fire apparatus frequently exceed the alternator capacity and can be supplied only by the deep discharge of the apparatus batteries. The high-cycle batteries that are designed to provide the large amount of amperage to crank modern diesel engines are severely damaged when deeply discharged. The automatic load management is intended to protect the electrical system from needless damage while maintaining the operation of essential devices.

It is important that the priority of all managed loads be specified by the purchaser so that, as electrical loads are disconnected from the apparatus's electrical systems, they are shed in an order least likely to affect emergency operations. Optical warning devices in excess of the minimum required in this standard can and should be load managed.

A.13.4 Batteries on fire apparatus should be larger than those used on commercial vehicles because, in addition to starting the vehicle, they need to provide the supplemental energy to power high-amperage, intermittent operation devices such as mechanical sirens and electric rewind hose reels.

Batteries usually have two ratings: "cold cranking amperes," which determine the size engine that can be started, and "reserve capacity," which provides a measure of the total power that can be provided at a much lower constant rate of discharge. Fire apparatus batteries should be sized to have enough cold cranking amperage and reserve capacity to restart the engine after being substantially discharged.

A.13.4.4.4 Overheating of a battery will cause rapid deterioration and early failure; evaporation of the water in the battery electrolyte can also be expected. Batteries in commercial chassis are often installed to take advantage of the cooling effect of the flow of air from motion in over-the-road operation and could be subject to overheating when the apparatus is operated in a stationary position, such as during pumping operations.

A.13.4.5 The power cord from the onboard charger or battery conditioner should be plugged only into a receptacle protected by a ground-fault circuit interrupter (GFCI) at the shoreline origination point.

A.13.4.6.4 The purchaser might want to consider a second "battery on" pilot light on the outside of the apparatus to warn that the batteries are on when the apparatus is parked in the fire station.

A.13.4.7 Sequential switching devices are sometimes used to minimize the load placed on the electrical system during apparatus startup for an emergency response.

A.13.7.1 SAE J551/2, *Test Limits and Methods of Measurement of Radio Disturbance Characteristics of Vehicles, Motorboats, and Spark-Ignited Engine-Driven Devices*, provides test procedures and recommended levels to assist engineers in the control of broadband electromagnetic radiation and in the control of radio interference resulting from equipment installed on the apparatus. Adherence to the recommended levels will minimize the degradation effects of potential interference sources on fireground communication equipment or other devices susceptible to electromagnetic interference.

Procedures are included to measure the radiation from a single device or the entire apparatus. Compliance could be determined through actual tests on the completed apparatus or predictions based on tests previously conducted on similarly equipped apparatus. If compliance certification is required, it should be so indicated in the apparatus specifications.

A.13.8.1 The upper-level optical warning devices provide warning at a distance from the apparatus, and the lower-level optical warning devices provide warning in close proximity to the apparatus. *(See Figure A.13.8.1.)*

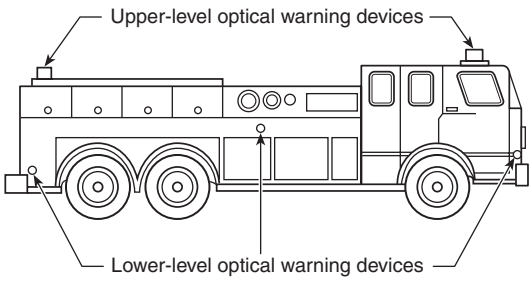

FIGURE A.13.8.1 Upper- and Lower-Level Optical Warning Devices.

A.13.8.7.3 Under typical conditions, the specified optical warning system provides effective, balanced warning. In some situations, however, the safety of the apparatus can be increased by turning off some warning devices. For example, if other vehicles need to pass within close proximity to the parked apparatus, the possibility of distracting other drivers can be reduced if the headlights and lower-level warning lights are turned off. When responding in snow or fog, it could be desirable to turn off forward-facing strobes or oscillating lights to reduce visual disorientation of the apparatus driver.

The intent of the warning light system is to provide full coverage signals through the operation of a single master switch when either responding or blocking the right-of-way. There is no intent to prevent the use of lower levels of warning when the apparatus driver believes such reductions are appropriate, given the vehicle's mission, the weather, or other operational factors. Additional switches downstream of the master switch can be specified by the purchaser to control individual devices or groups of devices.

Purchasers might want to specify traffic flow–type lighting such as amber directional indicators for use in alerting approaching motorists of blocked or partially blocked highways.

A.13.8.11 When a component such as a flasher or power supply is used to operate more than one optical source, the optical sources should be connected so that the failure of this component does not create a measurement point without a warning signal at any point in any zone on either the upper or lower level. Although a single optical source can be used to provide warning signals into more than one zone, the possibility of a total signal failure at a measurement point is increased when the same flasher or power supply is used to operate multiple optical sources, each providing signals into more than one zone.

Copyright National Fire Protection Association
Provided by IHS under license with NFPA
No reproduction or networking permitted without license from IHS
Not for Resale

A.13.8.12 Flashing headlights are used in many areas as warning lights and provide an inexpensive way to obtain additional warning to the front of the apparatus. Daylight flashing of the high beam filaments is very effective and is generally considered safe. Nighttime flashing could affect the vision of oncoming drivers as well as make driving the apparatus more difficult.

In some jurisdictions, headlight flashing is prohibited or limited to certain types of emergency vehicles. If flashing headlights are employed on fire apparatus, they are to be turned off when the apparatus headlights are on. They should also be turned off along with all other white warning lights when the apparatus is in the blocking mode.

Steady burning headlights are not considered warning lights and can be illuminated in the blocking mode to light the area in front of the apparatus. Consideration should be given, however, to avoid shining lights into the eyes of oncoming drivers.

A.13.8.13 The minimum optical warning system should require no more than an average of 40 A for the operation of the upper-level and lower-level devices in the blocking mode. On apparatus whose length requires midship lights, no more than 5 A of additional current should be required for the operation of each set of midship lights. Optical warning systems drawing more than 40 A might necessitate modification of the electrical system specified in Section 13.3 in order to supply the additional power required.

See Figure A.13.8.13(a) and Figure A.13.8.13(b) for illustrations of an optical warning system on a large fire apparatus.

A.13.8.13.5 The zone totals reflect the combined performance of the individual optical warning devices oriented as intended on the apparatus when viewed along the perimeter of a circle of 100 ft (30.5 m) radius from the geometric center of the apparatus.

The zone total is the sum of the optical power of all optical sources projecting signals of permissible color into the zone as measured at 5 degree increments along the horizontal plane passing through the optical center *H* throughout the 90 degrees included in the zone (19 data points). The calculation of zone totals assumes that all optical sources are mounted at the geometric center of the apparatus. With the optical center of each optical source oriented as installed, the optical power contributed by every optical source at a given point is taken from the test report, and they are added together to determine the total optical power at that point. The zone total is the sum of the optical power at the 19 measurement points in the zone. The upper- and lower-level optical sources are calculated independently.

The engineering basis of this section permits both the design and the certification of an optical warning system by mathematical combination of the individual test reports for any number of optical warning devices of different color, flash rate, optical source, and manufacturer.

Using the test reports provided by the device manufacturer, the contribution of optical energy from each optical source is determined for every data point. The total candela-seconds per minute of optical energy is determined at each point, and then the zone totals are calculated and compared to Table 13.8.13.5.

A.13.8.14 The minimum optical warning system should require no more than an average of 35 A for the operation of the devices in the blocking mode.

A.13.8.16 In a few cases, a manufacturer might wish to type certify by actual measurement of the optical warning system on an apparatus.

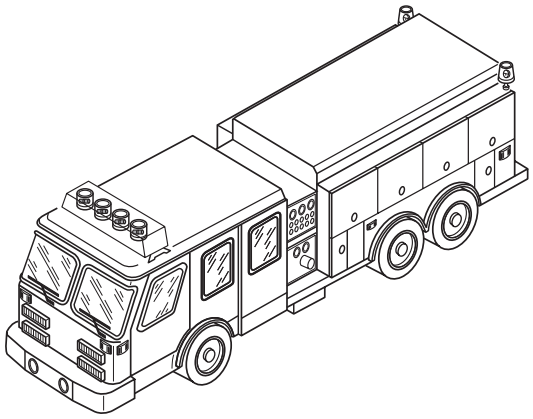

FIGURE A.13.8.13(a) Front and Left Side of an Apparatus with an Optical Warning System.

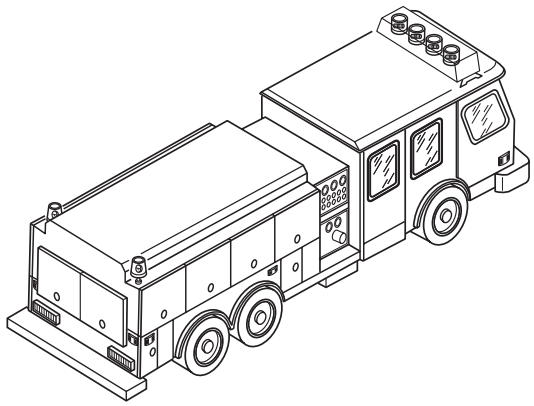

FIGURE A.13.8.13(b) Rear and Right Side of an Apparatus with an Optical Warning System.

Certification of the actual measurement of the performance of the optical warning system is made with each optical source either mounted on the apparatus or on a frame duplicating the mounting of the device on the apparatus. The performance of the system can be directly measured along the perimeter of a circle with a 100 ft (30.5 m) radius about the geometric center of the apparatus. Each optical warning device used should be certified by its manufacturer as conforming to all the requirements of this standard pertaining to mechanical and environmental testing. Photometric testing of the system should be performed by qualified personnel in a laboratory for such optical measurements.

The test voltages and other details should be as called for in this standard for the photometric testing of individual optical warning devices. The elevation of the photometer, however, could be set at the elevation that maximizes the performance of the upper-level devices and at a second, different elevation that maximizes the performance of the lower-level devices.

With the optical center of each device oriented as installed, the sum of the actual value of the optical power contributed by every optical source is then determined at each measurement point. The zone total is the sum of the optical power at the 19 measurement points in the zone.

Copyright National Fire Protection Association
Provided by IHS under license with NFPA
No reproduction or networking permitted without license from IHS
Not for Resale

Measurements are made to determine all the optical requirements of this standard, including the optical power at each of the required measurement points, the zone totals at the horizontal plane passing through the optical center, and the zone totals at 5 degrees above and 5 degrees below the horizontal plane passing through the optical center. Any upper-level warning devices mounted above the maximum height specified by the manufacturer(s) should be tested to demonstrate that at 4 ft (1.2 m) above level ground and 100 ft (30.5 m) from the mounted device, the optical energy exceeds 50 percent of the minimum required at the horizontal plane passing through the optical center.

A.13.9.1.2 If the purchaser wishes to have the siren controls within convenient reach of persons riding in both the right and left front seat positions, that should be specified. In some apparatus, multiple control switches might be necessary to achieve convenient reach from the two positions. If other signal devices, such as an additional siren, bell, air horn(s), or buzzer are desired, the type of device and its control location also should be specified.

A.13.11.2 Manually operated floodlights on telescoping poles are not required to be tied into the hazard light in the driving compartment. If the purchaser wishes that these devices be tied into the hazard light or otherwise equipped with an indicator to warn the operator the floodlights are in the up position, that should be specified in the purchase specification.

A.13.14.1 The purchaser might wish to have the entire low voltage electrical system and warning device system certified by an independent third-party certification organization.

A.14.1.3 The purchaser will need to define how many seating positions are required to carry personnel and might wish to specify the arrangement of the seating positions. Canopy cab extensions with patio door–type closures or separate telephone booth–type personnel enclosures are acceptable means for providing fully enclosed seating positions.

A.14.1.8.1 The H-point is the mechanically hinged hip point of the torso and thigh on the devices used in defining and measuring vehicle seating accommodation in SAE J826, *Devices for Use in Defining and Measuring Vehicle Seating Accommodation.* It is an imaginary point located in two-dimensional space above the seat cushion. The H-point is measured using a tool that simulates human hips and torso of a specific size and weight. The H-point will vary with the size, shape, and material of the seat back, seat frame, and seat cushion. If the H-point measurement is not available, it can be approximated by measuring 5 in. (130 mm) ahead of the seat back and 3 in. (75 mm) up from the nondepressed seat cushion surface.

Suspension-style seats have been developed for long-haul truck operations where the operator is driving for many hours at a time. Acceleration and braking are controlled, with an eye to fuel economy. The suspension-style seat in this duty profile provides a smoother ride and reduces fatigue from long hours in the seats. In contrast, the operator of a fire apparatus typically is making short runs with fast acceleration, quick maneuvers, and sudden braking. The bouncing motion of the suspension seat could hinder the driver's ability to maintain precise control of the throttle, brake, steering wheel, and other driving controls.

Selection of seating options should be made with consideration to the frequency of time that the driver will spend in the vehicle each day, and whether the department SOP requires or encourages the occupant of the seat to be equipped with head gear during travel. The use of headgear reduces headroom and increases the chance of injury should the vehicle encounter unexpected road undulation or speed bumps. The effect of such road conditions during high-speed operation might be intensified by the action of a seat suspension. Potential for injury is greatly increased by failure to use or properly adjust the seat belt.

Proper seat adjustment is another issue that should be addressed by the fire department SOPs if apparatus are equipped with suspension seats. Too much pressure in a suspension seat air bag will reduce static headroom height and will negate the potential benefits of the suspension. Too little pressure will cause the seat to bounce excessively. The proper amount of pressure is dependent on the weight of the occupant. Departments where multiple drivers share an apparatus must consider that adjustments should be made between each shift. Seat adjustment should not be postponed until the driver is exiting the station on the way to a call.

A.14.1.10.1 SCBA units and other equipment stored in the crew compartment can cause injuries to occupants of the compartment if they fly around the compartment as the result of an accident or other impact.

A.14.3.1 With the requirements for fully enclosed driving and crew compartments, the potential for heat buildup in these areas is greater. The purchaser should be aware of this condition and might wish to specify ventilation fans or air conditioning to keep the ambient temperature in the driving and crew compartment(s) lower.

A.14.3.3 The purchaser should realize that local conditions or operating procedures could cause the passenger to project into the sight pattern of the driver and therefore cause vision obstructions. Seats should be arranged so that SCBA and any passengers wearing protective clothing do not cause vision obstructions. Movement of the passenger should be considered when installing radios, computers, and other equipment so that forward movement or shifting is reduced to a minimum and does not block the driver's vision.

When specifying new apparatus, the purchaser should consider remotely controlled mirrors, especially on the passenger side. The location and mounting of the mirrors should not be placed where door pillars or other obstructions block their view. The location and mounting should be placed so warning lights do not reflect in the mirror to blind the driver's view. The location and mounting should not be placed so that the driver must look through the windshield area that is not wiped by the windshield wiper when viewing the passenger side mirror. Convex and other secondary mirrors should be considered to eliminate blind spots not covered by primary mirrors. Where necessary, heated mirrors should also be considered.

A.14.4.3 In many areas, the overall height of the vehicle needs to be restricted in order to clear bridges, station doors, and so forth. The tiller operator's compartment roof is normally the highest point on the vehicle. Careful consideration should be given to the packaging of the tiller body in deciding ground ladder and body compartmentation design to achieve the required seat head height.

A.15.1.1 Compartmentation that is sized to meet the size, shape, and weight requirements of special equipment might be required. Any special equipment to be carried on the apparatus should be identified in the specifications so that the apparatus manufacturer can ensure that the equipment will be properly accommodated within the design of the apparatus.

Copyright National Fire Protection Association
Provided by IHS under license with NFPA
No reproduction or networking permitted without license from IHS
Not for Resale

A.15.2 The purchaser needs to provide the apparatus manufacturer with the details of and any special needs for communication equipment such as radio size, power consumption, and location(s) for communication equipment.

A.15.3.1 Fire fighter injuries resulting from climbing on apparatus to retrieve, store, and operate equipment can be minimized if specifications require that equipment be accessible from ground level. Examples of ways to reduce the need to climb on the apparatus include, but are not limited to, using powered equipment racks, using remote control deck guns, lowering of storage areas for preconnected attack lines and using pull-out trays, using slide-out or pull-down storage trays, and providing for the checking of fluid levels from ground level.

A.15.3.2 Where equipment other than that originally mounted on the apparatus is to be carried, the fire department should ensure that the equipment is securely attached to the vehicle with appropriate holders.

A.15.5 SCBA units are typically stored in crew seats, behind bench seats, and on walls, doors, or shelves of storage compartments.

The area where the complete SCBA unit is to be mounted should be arranged to prevent damage to hose, straps, belts, facepiece, regulator, and other attachments. This should include prevention of wear and tear on the delicate facepiece due to vehicle movement. The facepiece should be stored in a nylon or plastic bag to prevent such abrasion.

Storage of spare hose assemblies, facepieces, regulators, and other SCBA pack accessories should be in a clean and dry area, away from heat-producing devices or mechanical damage. Preferably, the equipment should be stored individually in plastic or noncorrosive bins with dust free covers. The contents of each bin should be marked with a label on the exterior.

A.15.5.5 SCBA cylinders should always be stored with valve assemblies atop the cylinder.

A.15.5.6 SCBA cylinders should be stored with valve assemblies exposed to the compartment opening or storage area to permit inspection of valves or gauges.

A.15.6.5 The purchaser should consider specifying additional doors or removable panels for service, maintenance, or replacement of components in the fire pump installation.

A.15.7.1 Ascending into and descending from certain types of driving and crew compartments is ergonomically difficult and has resulted in falls and subsequent fire fighter injuries. When designing and specifying apparatus, it is strongly suggested that chassis and apparatus manufacturers be consulted concerning available alternatives to make driving and crew compartment access as ergonomically convenient and as safe as possible.

A.15.7.1.2 The intent of step size and placement requirements is to ensure that the fire fighter's foot will be supported 7 in. to 8 in. (175 mm to 200 mm) from the toe when the foot is placed on the step in the normal climbing position. The leading edge is not necessarily the side opposite the fastening location.

A.15.7.3 Apparatus are constructed with surface areas that are not intended to be used as stepping, standing, and walking areas. These include cosmetic and protective coverings on horizontal surfaces. During the design stage of the vehicle, purchasers should designate which areas are stepping, standing, or walking areas. It is important that proper materials are selected for the application and local conditions.

When selecting stepping, standing, and walking surfaces, the purchaser should take into consideration the long-term use of the vehicle. The slip resistance of certain surfaces might deteriorate over time. It is also important for the user to properly maintain or replace slip-resistant materials as they deteriorate over time.

A.15.8.4 Handrails should be mounted in a way to minimize the chances of damage or removal by brushing objects such as trees.

A.15.9.2 Corrosion protection, commonly known as undercoating, might be advantageous in areas where climatic conditions or road treatment will corrode vehicle components. The material, its application method, and the areas to be protected should be carefully specified so the corrosion protection will adequately protect the vehicle's cab and body sheet metal components subject to corrosive conditions that might be encountered in the user's area.

A.15.9.2.1 The purchaser should give consideration to the choice of paint color(s) as it relates to the total vehicle conspicuousness.

A.15.9.3.2 If fire departments specify rollup doors, they should consider affixing a strip of reflective material to the rail area below the door. If fire departments specify vertically hinged compartment doors, they should consider affixing 4 in. (100 mm) minimum-width reflective stripes or chevron-type reflective stripes on the inside of the doors.

A.15.10 Apparatus provided with booster hose and reel assemblies should have power rewind capability. However, if a manual rewind is provided, attention should be paid to the location of the hand crank. It should be placed in a location that allows the operator to rewind the hose onto the reel without having to climb onto the apparatus.

If the apparatus is to be used or stored in subfreezing conditions, the reel should be equipped with an air chuck mechanism to allow connection of an external source of compressed air to facilitate removal of water within the booster hose assembly. This mechanism should be located on the discharge side of the booster reel valve.

A.15.10.1 The purchaser should specify whether a single or split hose bed is desired and any special arrangements desired for preconnected hose lines.

A.15.10.3 It is also recommended that the purchaser consider specifying some type of cover for the hose compartment. Hinged or removable covers might be advantageous.

A.15.11 Trailer hitch–type receivers are commonly used as anchor points for both removable winches and rope operations. Removable winches are intended for equipment recovery operations only. Rope operations could involve personnel rescue, which requires the receiver and its anchorage to be designed using higher safety factors.

A.15.12.2 If the unit is going to be moved on and off a chassis periodically, the purchaser might wish to specify lifting eyes or forklift slots to facilitate its movement.

A.16.2.2 If the apparatus is equipped with an automatic transmission, it is acceptable to lightly apply throttle and brakes for short periods of time to maintain a maximum speed of 2 mph (3.2 kmph).

If the vehicle is to be used for simultaneous pump-and-roll and fire fighting while the vehicle is moving, remote controlled nozzle(s) or turret(s) should be considered. See also A.6.3.1 of NFPA 1500, *Standard on Fire Department Occupational Safety and Health Program.*

Copyright National Fire Protection Association
Provided by IHS under license with NFPA
No reproduction or networking permitted without license from IHS
Not for Resale

A.16.2.3.2.4 Parallel operation can be referred to as "volume," and series operation can be referred to as "pressure."

A.16.2.4.1 At an altitude of 2000 ft (600 m), the actual (uncorrected) atmospheric pressure equivalent to the sea level reading of 29.9 in. Hg (101 kPa) is 27.8 in. Hg (94.1 kPa).

The values given in Table 16.2.4.1(b) and Table 16.2.4.1(c) are representative values of pressure losses due to flow entrance, velocity, and friction sources through 20 ft (6 m) of suction hose (including strainer) of the diameter indicated.

The basis of the tables on friction loss is tabular data from 1953 testing and other accumulated data and testing. In 1976, the data were reviewed and incorporated in Table 16.2.4.1(b). The data do include a velocity head component and the values do account for bending, because as the actual values were derived from suction hose bent from the suction intake into the test pit.

A.16.2.4.2 Where the community to which the apparatus is to be delivered is at a considerably higher altitude than the factory or other test location, sufficient excess power should be provided to compensate for the fact that the power of a naturally aspirated internal combustion engine decreases with elevation above sea level. The performance of a fire pump can be adversely affected by the design of the suction piping or the addition of valves to the suction side of the pump. Losses due to additional piping or valves that are added to the fire pump suction can be calculated and used to determine pump performance.

A.16.3.4 A separate pumping engine could use the vehicle chassis battery system, or it could have a separate set of dedicated batteries. Whichever system is used, the battery charging and electrical supply should be designed to meet this standard.

A.16.4.3 Each component in the driveline has a continuous duty torque rating. At this level of usage, each component also has a design life expressed as hours of use at rated torque. The design life of some components can be substantially less than the remaining drive system components. An hourmeter activated by the pumping system and marked with a label should be provided to log the number of hours of drive system usage.

Programming the engine to use an alternate torque curve or sizing the pump and pump gear ratio to limit the torque required is an acceptable means of limiting the net engine output torque.

A.16.5.1 Pumps and piping that are frequently used to pump saltwater, water with additives, or other corrosive waters should be made of bronze or other corrosion-resistant materials. For occasional pumping of such water, pumps made of other materials are satisfactory if properly flushed out with freshwater after such use. Where corrosive water is being pumped and the pump and piping are not made of corrosion-resistant materials, the placement of anodes in the pump might minimize the corrosive effects.

The term *all bronze* indicates that the pump's main casing, impeller, intake and discharge manifolds, and other principal components that are exposed to the water to be pumped, with the exception of the shaft bearings and seals, are made of a high-copper alloy material. It is preferable to use similar materials for the pump and piping.

Corrosion effects are proportional to the mass relationship of bronze to iron. It is, therefore, preferable to use similar materials for the pump and piping. Where both iron and bronze are used, it is preferable to keep the mass of the iron larger than that of the bronze.

A.16.6.1 Intakes can be larger than the size of the suction hose specified in Table 16.2.4.1(a). It is also advantageous to have valves on one or more of the intakes. The purchaser should specify if larger intakes are to be provided and if any of the intakes are to be equipped with valves.

Intakes at the front or rear of the apparatus, or otherwise specially situated, might not allow drafting rated capacity at rated pressure. The purchaser should specify the flow rates required from auxiliary intakes, especially front and rear intakes or other intakes located 10 ft (3 m) or more away from the pump. When provided, the purchaser should also consider requiring the manufacturer to certify the actual flow rates from auxiliary intakes.

A.16.6.1.3 Pressurizing a suction inlet could create a dynamic water hammer that might cause a hose or fitting failure, resulting in injury or death to anyone in the immediate vicinity. Valves should be opened and closed slowly, and lines should be charged slowly.

A.16.6.2.2 Sizing of the openings of the strainer(s) is intended for debris of generally uniform dimensions. It is recognized that debris of nonuniform dimensions — that is, long in relation to cross section — might be able to pass through the strainer(s) while not being able to pass through the pump.

A.16.6.5 The bleeder valve should be used prior to the removal of a hose or a cap or other closure connected to an intake. The bleeder valve should also be used while filling a hose connected to an intake with water. Failure to use the bleeder valve in these situations might result in serious injury or death.

A.16.7 Consideration should be given to providing an additional pump cooling/recirculation line that is automatic in operation, because pumps on fire apparatus are often left unattended and a line that is automatic in operation will ensure the pump does not overheat.

A.16.7.1 The flows listed for each outlet size are minimum and are for rating purposes only. If piping and valving are sufficient, much higher flows for a given outlet size might be achievable.

A.16.7.2.2 For standardization, National Hose threads are required. Adapters can then be used to adapt to locally used hose connections.

A.16.7.3 If flows greater than 200 gpm (750 L/min) through preconnected lines are needed, piping from the pump to preconnected hose lines should be larger than 2 in. (52 mm) in order to keep the friction loss to a reasonable level. If additional preconnected lines are wanted, the location and hose size should be specified.

A.16.7.5.2 Control of discharges on apparatus are now available in pull-type actuators, trunnion or swing valves, flexible push/pull controls, gear-operated hand wheel controls, and hydraulic, air, and electric operators. These are available with either quick-operating or slow-operating valve mechanisms. The nozzle and hose reaction and "operational effort" for high flow or high pressure discharges are critically important to many fire departments. Because of the variations in types of individuals and characteristics of operators involved with pump operations, a purchaser should carefully evaluate valve controls. Slow-closing gear-operated and other power-operated valves should be considered for valves 3 in. (75 mm) and larger.

A.16.7.9 Where possible, discharge outlets should be positioned in an area away from the pump operator's position.

Copyright National Fire Protection Association
Provided by IHS under license with NFPA
No reproduction or networking permitted without license from IHS
Not for Resale

If a deck gun or monitor is to be mounted on the top of the apparatus, consideration should be given to designing the system so it can be operated without the need for a person to climb to the top of the apparatus. This can be accomplished by using a remotely operated monitor or by positioning the device so it is operable from the pump operator's position.

A.16.9.1 Ideally, having no intake or discharge connections at the operator's position would simplify and improve safety for the operator. If complete removal of these connections is impractical, the reduction and careful placement of these connections, with operator safety in mind, would improve the situation considerably.

Many fire departments have found it useful to color code the labels used to identify the various discharge and intake controls. While this process can simplify pump operations, it can also create confusion if a pattern is not followed on all apparatus in the department. For standardization, the color-coding scheme in Table A.16.9.1 is recommended for all new apparatus labels, as applicable.

Table A.16.9.1 Color Scheme for Labels on Discharge and Intake Controls

Discharge	Color
Preconnect #1 or front bumper jump line	Orange*
Preconnect #2	Red*
Preconnect #3 or discharge #1	Yellow*
Preconnect #4 or discharge #2	White*
Discharge #3	Blue
Discharge #4	Black
Discharge #5	Green
Deluge/deck gun	Silver
Water tower	Purple
Large-diameter hose	Yellow with white border
Foam line(s)	Red with white border
Booster reel(s)	Gray
Inlets	Burgundy

*Because the vast majority of fires are extinguished using preconnected lines, a fire department should give consideration to matching the hose jacket color to the color of these labels. Fire departments using this system have reported an improvement in fireground operations.

A.16.10 The indicator lights and interlocks specified in this section are minimums. Some manufacturers or users might choose to add additional indicator lights or interlocks.

A.16.10.1.2 Pumps are operated from the side, top, front, or rear of the vehicle, and stationary pumping requires that no power is applied to the wheels while pumping. Therefore, it is essential that any controls that could apply power to the wheels while pumping be equipped with a means to prevent dislocation of the control from its set position in the pumping mode.

A.16.10.2.1 Completion of the pump shift might require that the chassis transmission be shifted into pump gear.

A.16.10.3.1 Completion of the pump shift might require that the chassis transmission be shifted into pump gear.

A.16.10.13 The purpose of a pressure control system is to control the discharge pressures in order to protect fire fighters who are operating hose streams as well as to protect discharge hose from damage in the event attack hose streams are shut off or other valves are closed, reducing flow rates.

The system could consist of a discharge relief valve, a pressure regulator that controls the speed of the pump, an intake relief valve, or any combination of these devices. Pressure control systems will relieve excess pressure when valves are closed in a normal manner, but some water hammer conditions could occur due to valves being closed so quickly that the system cannot respond fast enough to eliminate damage to equipment. Proper fireground procedures are still required.

A.16.10.13.1 Pressure control systems can be supplied in the following forms:

(1) Integral with the pump and supplied by the pump manufacturer
(2) As an external system of components supplied by the apparatus manufacturer
(3) As an external control system provided by a pressure control manufacturer

Pressure governors control the engine speed, which relates directly to the net pump pressure: if the speed is raised, the pressure goes up; if the speed is lowered, the pressure goes down.

Discharge relief valves control pressure by passing water from the discharge side of the pump back into the intake side of the pump. This type of system works in a pressure differential of approximately 70 psi to 90 psi (500 kPa to 600 kPa) between the intake and discharge sides of the pump. If the pressure differential is not present, the discharge relief valve might not control a pressure rise completely.

If either a discharge relief valve or a pressure governor is used with high incoming inlet pressures, an intake relief valve or total control system must be added.

In the case where an intake relief valve is selected, it must be of sufficient size and response time to handle the pump performance range. It must also be easily controlled by the pump operator so that this incoming pressure can be adjusted for each incident. For best results, the operator should set the intake relief valve to operate at 90 psi (600 kPa) below the desired discharge operating pressure.

The pressure control system should be certified by the appropriate manufacturer or an independent third-party certification organization. Because of the importance of these systems, the purchaser might wish to have performance tests conducted on the installed system.

A.16.10.14 Departments that need to attain a draft while conducting operations off tank water will find that adding a primer selector valve or second priming control valve to allow attaining a draft on the outboard side of the gated pump suction valve will eliminate the danger of cavitation while supplying attack lines. A vacuum line is run to the outboard side of the valve and connected through a selector valve to the primer. Side, front, and rear selector settings can be arranged to allow priming off any side of the unit with one primer.

A.16.11.1 The electronic throttle control systems that are currently available will provide greater flexibility for the operator because they can be set like a traditional throttle or a pressure governor.

Copyright National Fire Protection Association
Provided by IHS under license with NFPA
No reproduction or networking permitted without license from IHS
Not for Resale

A.16.12.1.1 A pumping engine fuel level indicator or red warning light indicating when the fuel level falls below one-fourth of the capacity of the tank(s) should be provided on the pump operator's panel.

A.16.12.3.2 Because the rated operating pressure of large-diameter supply hose is substantially less than that of attack fire hose, an individual pressure gauge is required to allow the operator to control the discharge pressure even where a flowmeter is provided.

A.16.13.1.2.3 The purchaser might wish to have an independent third-party certification organization certify the test results, particularly where the pump is required to meet extended continuous duty pumping applications.

A.16.13.2.1.2 Where tests are performed inside a structure or elsewhere that has limited air circulation, carbon monoxide monitoring equipment should be used. Such equipment should be checked and calibrated regularly and should include a suitable warning device.

A.16.13.2.2.6 If a counter speed shaft is not provided, the engine speed can be read with a phototachometer or strobe light off a rotating element.

A.16.13.2.3.1 Annex A of NFPA 1911, *Standard for Service Tests of Fire Pump Systems on Fire Apparatus*, shows a test data form for recording the test readings and other necessary data.

A.16.13.2.3.2 Where an engine is operating at or near full power while stationary, the heat generated could raise the temperature of certain chassis or pumping system components above the level that, when touched, could cause extreme discomfort or injury. However, as long as the apparatus can be operated and used satisfactorily for the required duration of the test under such conditions, it should be considered acceptable.

The suction lift can be determined either by measuring the negative pressure (vacuum) in the pump intake manifold with a manometer or other suitable test gauge that measures vacuum accurately or by adding the vertical lift and the value of friction and entrance loss from Table 16.2.4.1(b) or Table 16.2.4.1(c). To be accurate, gauge readings should be corrected for the difference between the height of the gauge and the centerline of the pump intake, but usually this is not a significant amount and could be ignored. Thus, the net pump pressure can be calculated by using the following formulas.

Inch-pound units:

$$P = D + (H \times 0.5)$$

or

$$P = D + 0.43(L + F)$$

where:
P = net pump pressure (psi)
D = discharge pressure (psi gauge)
H = manometer reading (in. Hg)
L = vertical lift (ft)
F = friction and entrance loss (ft of water)

Metric units:

$$P_m = D_m + H_m$$

or

$$P_m = D_m + F_m + 9.8L_m$$

where:
P_m = net pump pressure (kPa)
D_m = discharge pressure (kPa)
H_m = manometer reading (kPa)
F_m = friction and entrance loss (kPa)
L_m = vertical lift (m)

A.16.13.8 If the tests of some components of the apparatus are being certified by an independent third-party certification organization, the purchaser might wish to specify that these tests also be certified by the independent third-party certification organization.

A.17.1 Auxiliary pumps come in a variety of different styles; gear, piston, and centrifugal designs are available. Where centrifugal designs are specified, the purchaser also has to select if it is to be a single stage, series-only multistage, or series/parallel multistage–type pump.

The purchaser should indicate the type of operation and performance required from the auxiliary pump. Auxiliary pumps are predominantly for fighting grass fires or other small blazes. Low capacity with high pressure through ¾ in. (19 mm) or 1 in. (25 mm) booster hose is commonly used for these fires. Pump-and-roll is often required.

A.17.3 Various types of pump drive systems are available. These pumps are often driven by power takeoff units attached to SAE PTO openings on the chassis transmission. There are also front-of-engine PTO systems, flywheel PTO systems, split driveline PTO systems, and separate engine drive systems.

A.17.3.1 The volume and pressure that can be obtained safely depend on the torque capacity of the apparatus's transmission or transfer case, power takeoff, and pump driveline. In most cases, the torque rating of the PTO will determine the maximum pump performance. Power takeoff manufacturers assign a torque rating to their products. This torque rating is based on intermittent service, as in operating the PTO at the full torque limit for a period of 5 minutes or less. For continuous duty, the intermittent torque rating is devalued 30 percent.

A.17.3.2 Sustained operations at either high volume, high pressure, or both high volume and high pressure could cause excessive heating of the transmission lubricant. To maintain lubricant temperatures below the component manufacturer's published limits, it might be necessary to employ oil-to-oil or oil-to-water heat exchangers. The latter should be of a type that will not trap water, which would cause serious damage if the water is subsequently frozen.

A.17.5.1 The purchaser should indicate the number, size, and location of the pump intake connections or combination of connections desired. The types of pump intake connections are as follows:

(1) External intake
(2) Direct supply line from the water tank
(3) Supply line from the discharge side of the fire pump

--`,,```,,,,````-`-`,,`,,`,`,,`---
Copyright National Fire Protection Association
Provided by IHS under license with NFPA
No reproduction or networking permitted without license from IHS
Not for Resale

A.17.6 The purchaser should indicate the size, number, and location of the pump discharge connections desired. The types of pump discharge connections are as follows:

(1) Discharge line(s) for nonpreconnected hose lines
(2) Discharge line(s) to preconnected hose lines
(3) Discharge line(s) to booster reel(s) (if provided)

A.17.6.3.1 For standardization, National Hose threads are required. Adapters can then be used to adapt to locally used hose connections.

A.17.9.4 A separate pumping engine could use the vehicle chassis battery system, or it could have a separate set of dedicated batteries. Whichever system is used, battery charging and electrical supply should be designed to meet this standard.

A.18.2.3 This pump and its ratings are designed for high-flow applications, primarily from hydrants, required for large industrial or refinery fires. These pumps are not designed for all the applications that a fire pump is designed to meet. These pumps might not be ideally suited for low flow, on and off operations, or prolonged standby periods.

A.18.2.4.1 At an altitude of 2000 ft (600 m), the actual (uncorrected) atmospheric pressure equivalent to the sea level reading of 29.9 in. Hg (101 kPa) is 27.8 in. Hg (941 kPa).

The values given in Table 18.2.4.1(b) and Table 18.2.4.1(c) are representative values of pressure losses due to flow entrance, velocity, and friction sources through 20 ft (6 m) of suction hose (including strainer) of the diameter indicated.

The basis of the tables on friction loss is tabular data from 1953 testing and other accumulated data and testing. The data do include a velocity head component and the values do account for bending, because the actual values were derived from suction hose bent from the suction intake into the test pit.

A.18.2.4.2 Where the community to which the apparatus is to be delivered is at a considerably higher altitude than the manufacturer's facility or other test location, sufficient excess power should be provided to compensate for the fact that the power of a naturally aspirated internal combustion engine decreases with elevation above sea level. The performance of a fire pump can be adversely affected by the design of the suction piping or the addition of valves to the suction side of the pump. Losses due to additional piping or valves that are added to the fire pump suction can be calculated and used to determine pump performance.

A.18.3.3 A separate pumping engine could use the vehicle chassis battery system, or it could have a separate set of dedicated batteries. Whichever system is used, the battery charging and electrical supply should be designed to meet this standard.

A.18.4.3 Each component in the driveline has a continuous duty torque rating. At this level of usage, each component also has a design life expressed as hours of use at rated torque. The design life of some components can be substantially less than the remaining drive system components. An hourmeter activated by the pumping system and marked with a label should be provided to log the number of hours of drive system usage.

Programming the engine to use an alternate torque curve or sizing the pump and pump gear ratio to limit the torque required are acceptable means of limiting the net engine output torque.

A.18.5.1 Pumps and piping that are frequently used to pump saltwater, water with additives, or other corrosive waters should be made of bronze or other corrosion-resistant materials. For occasional pumping of such water, pumps made of other materials are satisfactory if properly flushed out with freshwater after such use. Where corrosive water is being pumped and the pump and piping are not made of corrosion-resistant materials, the placement of anodes in the pump might minimize the corrosive effects.

The term *all bronze* indicates that the pump's main casing, impeller, intake and discharge manifolds, and other principal components that are exposed to the water to be pumped, with the exception of the shaft bearings and seals, are made of a high-copper alloy material. It is preferable to use similar materials for the pump and piping.

Corrosion effects are proportional to the mass relationship of bronze to iron. It is, therefore, preferable to use similar materials for the pump and piping. Where both iron and bronze are used, it is preferable to keep the mass of the iron larger than that of the bronze.

A.18.6.1 Intakes can be larger than the size of the suction hose specified in Table 18.2.4.1(a). It is also advantageous to have valves on one or more of the intakes. The purchaser should specify if larger intakes are to be provided and if any of the intakes are to be equipped with valves.

Intakes at the front or rear of the apparatus, or otherwise specially situated, might not allow drafting rated capacity at rated pressure. The purchaser should specify the flow rates required from auxiliary intakes, especially front and rear intakes or other intakes located 10 ft (3 m) or more away from the pump. When provided, the purchaser should also consider requiring the manufacturer to certify the actual flow rates from auxiliary intakes.

A.18.6.1.3 Pressurizing a suction inlet could create a dynamic water hammer that might cause a hose or fitting failure resulting in injury or death to anyone in the immediate vicinity. Valves should be opened and closed slowly, and lines should be charged slowly.

A.18.6.2.2 Sizing of the openings of the strainer(s) is intended for debris of generally uniform dimensions. It is recognized that debris of nonuniform dimensions — that is, long in relation to cross section — might be able to pass through the strainer(s) while not being able to pass through the pump.

A.18.6.5 The bleeder valve should be used prior to the removal of a hose or a cap or other closure connected to an intake. The bleeder valve should also be used while filling a hose connected to an intake with water. Failure to use the bleeder valve in these situations might result in serious injury or death.

A.18.7 Consideration should be given to providing an additional pump cooling/recirculation line that is automatic in operation, because pumps on fire apparatus are often left unattended and a line that is automatic in operation will ensure the pump does not overheat.

A.18.7.1 The flows listed for each outlet size are minimum and are for rating purposes only. If piping and valving are sufficient, much higher flows for a given outlet size might be achievable.

A.18.7.2.2 For standardization, National Hose threads are required. Adapters can then be used to adapt to locally used hose connections.

A.18.7.3 If flows greater than 200 gpm (750 L/min) through preconnected lines are needed, piping from the pump to preconnected hose lines should be larger than 2 in. (52 mm) in order to keep the friction loss to a reasonable level. If additional preconnected lines are wanted, the location and hose size should be specified.

Copyright National Fire Protection Association
Provided by IHS under license with NFPA
No reproduction or networking permitted without license from IHS
Not for Resale

A.18.7.5.2 Control of discharges on apparatus are now available in pull-type actuators, trunnion or swing valves, flexible push/pull controls, gear-operated hand wheel controls, and hydraulic, air, and electric operators. These are available with either quick-operating or slow-operating valve mechanisms. The nozzle and hose reaction and "operational effort" for high flow or high pressure discharges are critically important to many fire departments. Because of the variations in types of individuals and characteristics of operators involved with pump operations, a purchaser should carefully evaluate valve controls. Slow-closing gear-operated and other power-operated valves should be considered for valves 3 in. (75 mm) and larger.

A.18.7.9 Where possible, discharge outlets should be positioned in an area away from the pump operator's position.

If a deck gun or monitor is to be mounted on the top of the apparatus, consideration should be given to designing the system so it can be operated without the need for a person to climb to the top of the apparatus. This can be accomplished by using a remotely operated monitor or by positioning the device so it is operable from the pump operator's position.

A.18.9.1 Ideally, having no intake or discharge connections at the operator's position would simplify and improve safety for the operator. If complete removal of these connections is impractical, the reduction and careful placement of these connections, with operator safety in mind, would improve the situation considerably.

Many fire departments have found it useful to color code the labels used to identify the various discharge and intake controls. While this process can simplify pump operations, it can also create confusion if a pattern is not followed on all apparatus in the department. For standardization, the color-coding scheme in Table A.18.9.1 is recommended for all new apparatus labels, as applicable.

A.18.10 The indicator lights and interlocks specified in this section are minimums. Some manufacturers or users might choose to add additional indicator lights or interlocks.

Table A.18.9.1 Color Scheme for Labels on Discharge and Intake Controls

Discharge	Color
Preconnect #1 or front bumper jump line	Orange*
Preconnect #2	Red*
Preconnect #3 or discharge #1	Yellow*
Preconnect #4 or discharge #2	White*
Discharge #3	Blue
Discharge #4	Black
Discharge #5	Green
Deluge/deck gun	Silver
Water tower	Purple
Large-diameter hose	Yellow with white border
Foam line(s)	Red with white border
Booster reel(s)	Gray
Inlets	Burgundy

*Because the vast majority of fires are extinguished using preconnected lines, a fire department should give consideration to matching the hose jacket color to the color of these labels. Fire departments using this system have reported an improvement in fireground operations.

A.18.10.1.2 Pumps are operated from the side, top, front, or rear of the vehicle, and stationary pumping requires that no power is applied to the wheels while pumping. Therefore, it is essential that any controls that could apply power to the wheels while pumping be equipped with a means to prevent dislocation of the control from its set position in the pumping mode.

A.18.10.2.1 Completion of the pump shift might require that the chassis transmission be shifted into pump gear.

A.18.10.3.1 Completion of the pump shift might require that the chassis transmission be shifted into pump gear.

A.18.10.13 The purpose of a pressure control system is to control the discharge pressures in order to protect fire fighters who are operating hose streams as well as to protect discharge hose from damage in the event attack hose streams are shut off or other valves are closed, reducing flow rates.

The system could consist of a discharge relief valve, a pressure regulator that controls the speed of the pump, an intake relief valve, or any combination of these devices. Pressure control systems will relieve excess pressure when valves are closed in a normal manner, but some water hammer conditions could occur due to valves being closed so quickly that the system cannot respond fast enough to eliminate damage to equipment. Proper fireground procedures are still required.

A.18.10.13.1 Pressure control systems can be supplied in the following forms:

(1) Integral with the pump and supplied by the pump manufacturer
(2) As an external system of components supplied by the apparatus manufacturer
(3) As an external control system provided by a pressure control manufacturer

Pressure governors control the engine speed, which relates directly to the net pump pressure: if the speed is raised, the pressure goes up; if the speed is lowered, the pressure goes down.

Discharge relief valves control pressure by passing water from the discharge side of the pump back into the intake side of the pump. This type of system works in a pressure differential of approximately 70 psi to 90 psi (500 kPa to 600 kPa) between the intake and discharge sides of the pump. If the pressure differential is not present, the discharge relief valve might not control a pressure rise completely.

If either a discharge relief valve or a pressure governor is used with high incoming inlet pressures, an intake relief valve or total control system must be added.

In the case where an intake relief valve is selected, it must be of sufficient size and response time to handle the pump performance range. It must also be easily controlled by the pump operator so that this incoming pressure can be adjusted for each incident. For best results, the operator should set the intake relief valve to operate at 90 psi (600 kPa) below the desired discharge operating pressure.

The pressure control system should be certified by the appropriate manufacturer or an independent third-party certification organization. Because of the importance of these systems, the purchaser might wish to have performance tests conducted on the installed system.

A.18.10.14 Departments that need to attain a draft while conducting operations off tank water will find that adding a primer selector valve or second priming control valve to allow attaining a draft on the outboard side of the gated pump suction valve will eliminate the danger of cavitation while supplying attack lines. A

--`,,```,,,,````-`-`,,`,,`,`,,`---

Copyright National Fire Protection Association
Provided by IHS under license with NFPA
No reproduction or networking permitted without license from IHS
Not for Resale

vacuum line is run to the outboard side of the valve and connected through a selector valve to the primer. Side, front, and rear selector settings can be arranged to allow priming off any side of the unit with one primer.

A.18.11.1 The electronic throttle control systems that are currently available will provide greater flexibility for the operator because they can be set like a traditional throttle or a pressure governor.

A.18.12.1.1 A pumping engine fuel level indicator or red warning light indicating when the fuel level falls below one-fourth of the capacity of the tank(s) should be provided on the pump operator's panel.

A.18.12.3.2 Because the rated operating pressure of large diameter supply hose is substantially less than that of attack fire hose, an individual pressure gauge is required to allow the operator to control the discharge pressure even where a flowmeter is provided.

A.18.13.2.1.2 Where tests are performed inside a structure or elsewhere that has limited air circulation, carbon monoxide monitoring equipment should be used. Such equipment should be checked and calibrated regularly and should include a suitable warning device.

A.18.13.2.2.6 If a counterspeed shaft is not provided, the engine speed can be read with a phototachometer or strobe light off a rotating element.

A.18.13.2.3.1 Annex A of NFPA 1911, *Standard for Service Tests of Fire Pump Systems on Fire Apparatus*, shows a test data form for recording the test readings and other necessary data.

A.18.13.2.3.2 Where an engine is operating at or near full power while stationary, the heat generated could raise the temperature of certain chassis or pumping system components above the level that, when touched, can cause extreme discomfort or injury. However, as long as the apparatus could be operated and used satisfactorily for the required duration of the test under such conditions, it should be considered acceptable.

The suction lift can be determined either by measuring the negative pressure (vacuum) in the pump intake manifold with a manometer or other suitable test gauge that measures vacuum accurately or by adding the vertical lift and the value of friction and entrance loss from Table 18.2.4.1(b) or Table 18.2.4.1(c). To be accurate, gauge readings should be corrected for the difference between the height of the gauge and the centerline of the pump intake, but usually this is not a significant amount and could be ignored. Thus, the net pump pressure can be calculated by using the following formulas.

Inch-pound units:

$$P = D + (H \times 0.5)$$

or

$$P = D + 0.43(L + F)$$

where:
P = net pump pressure (psi)
D = discharge pressure (psi gauge)
H = manometer reading (in. Hg)
L = vertical lift (ft)
F = friction and entrance loss (ft of water)

Metric units:

$$P_m = D_m + H_m$$

or

$$P_m = D_m + F_m + 9.8L_m$$

where:
P_m = net pump pressure (kPa)
D_m = discharge pressure (kPa)
H_m = manometer reading (kPa)
F_m = friction and entrance loss (kPa)
L_m = vertical lift (m)

A.18.13.7 If the tests of some components of the apparatus are being certified by an independent third-party certification organization, the purchaser might wish to specify that these tests also be certified by the independent third-party certification organization.

A.19.2.2 Water tanks should have provisions that would allow for complete inside cleaning for flushing. The purchaser should indicate in the specifications if access to the interior of the tank is required.

A.19.2.3 Water tanks can appear in several different configurations, such as round, elliptical, rectangular, or T-shaped. Handling characteristics of the apparatus can be greatly affected by its vertical and horizontal centers of gravity. The purchaser should indicate the filling and dumping rates required if those rates exceed the requirements of this standard and any other local needs and let the apparatus manufacturer design the tank shape to best meet the axle-loading and center-of-gravity requirements.

When the tanks are made as one unit with the body and compartments, the material used is important. It should be corrosionproof and a material that does not easily sweat.

A.19.2.5 The design of a water tank can be a critical factor in the handling characteristics of fire apparatus. If water is free to travel either longitudinally or laterally in a tank, as would be the case if the tank were half full, a tremendous amount of inertia can be built up that will tend to force the fire apparatus in the direction the water has been traveling. When the water reaches the end of the tank, this sudden application of force can throw the fire apparatus out of control and has been known to cause fire apparatus to turn over or skid when going around a curve or coming to a sudden stop. The only methods for preventing such accidents are to restrict or disrupt the movement of the water so that the inertia will not build up in one direction. This is done with the installation of swash partitions to either contain the water in smaller spaces within the tank (containment method) or disrupt its momentum by changing its direction of motion (dynamic method). The partitions in a containment system create compartments that are interconnected by openings between them so that air and water can flow at the specified rate when filling and emptying the tank. The partitions in a dynamic system are often staggered in an arrangement designed to change the direction of the water and turn it into a turbulent motion that absorbs much of its own energy.

A.19.3.3 A check valve installed in the tank-to-pump line is the most common method used to prevent water from backflowing into the tank at an excessive rate if the pump is being supplied from a hydrant or relay pumper and the tank-to-pump line valve has been inadvertently left in the open position.

A hole up to ¼ in. (6 mm) is sometimes provided in the check valve to release steam or other pressure buildup.

Copyright National Fire Protection Association
Provided by IHS under license with NFPA
No reproduction or networking permitted without license from IHS
Not for Resale

A.19.4.1 Where rapid filling of the water tank from an external source is desired, the purchaser should consider an inlet directly into the tank that is capable of allowing the tank to be filled at a rate of 1000 gpm (4000 L/min). Where such a fill connection is provided, it should conform to the requirements of 19.5.1.

A.19.4.1.4 An excessive flow rate when filling a tank could result in a pressure buildup in the tank that could cause permanent damage or failure.

A.19.4.2.2 A vent/overflow outlet is necessary so that overpressurization does not occur within the tank while it is being filled. However, water is likely to spill out of the vent/overflow while the fire apparatus is moving (e.g., accelerating, decelerating, or cornering). The fill tower and vent/overflow outlet should be arranged so that water spillage is minimized and is directed behind the rear tires.

A.19.4.3.1 If a larger fill line is desired, the buyer should consult with the manufacturer on construction of the tank inlet location and any required reinforcement or alternation of the tank baffles. It is necessary to design the tank with venting and overflow capability for the maximum fill rate.

A.19.4.3.2 See A.19.4.3.1.

A.19.4.3.3 A locking-type ball valve, globe valve, needle valve, or other type of valve capable of regulating flows should be used. A gate valve is not recommended.

A.19.5.1.1 Where large filling rates are used, fill connections should be equipped with a diffuser inside the tank to minimize potential structural damage. It is important that the purchaser evaluate how the apparatus will be used and define the location and type of fittings desired on this tank fill.

Where rapid filling of the water tank on another type of apparatus from an external use is desired, the purchaser should consider an inlet directly into the tank that is capable of allowing the tank to be filled at a rate of 1000 gpm (4000 L/min). Where such a fill connection is provided, it should conform to the requirements of 19.5.1.

A.19.5.2 It is important that the purchaser evaluate how the apparatus will be used and define the location(s) and types of fittings for these outlets.

Where rapid dumping of the contents of the water tank to an external use is desired on other types of apparatus, the purchaser should consider an outlet directly into the tank that is capable of allowing water to be transferred from the tank at an average rate of at least 1000 gpm (4000 L/min).

A.19.5.2.2 Additional methods might be desired to improve the off-loading rate of gravity dumps. These methods include a jet assist or a pneumatic pump. Control should be from the pump operator's position. Two types of jet assists can be used, one directed into the throat of the gravity dump and the other a peripheral jet system. Figure A.19.5.2.2(a) shows how the traditional jet is installed. A smooth-tipped "jet" nozzle is supplied by a pump that is capable of delivering at least 250 gpm (1000 L/min) at a gauge pressure of 150 psi (1000 kPa). Nozzle jets range in size from ¾ in. to 1¼ in. (19 mm to 33 mm). The diameter of the tip will be determined by the capacity of the pump being used and the diameter of the discharge piping and dump valve.

The peripheral application of jet assist nozzles has proved highly effective. This approach utilizes two or more jets installed in the sides of the discharge piping just outside the quick dump valve. In addition to the reported discharge advantages of peripheral discharge streams, the externally fed system is easier to plumb and has fewer maintenance problems. The jets, installed 25 degrees to 30 degrees from the piping wall, contact more surface area of the discharging water, thereby increasing water discharge efficiency. Because the water is drawn through the dump valve, less turbulence is created and the eddy effect often present with traditional in-line jets is overcome. Nozzles made by welding reducer pipe fittings work very effectively as jets. Flow rates of 2000 gpm (8000 L/min) have been obtained using a 300 gpm (1100 L/min) pump to supply two ¾ in. (19 mm) nozzles in a 6 in. (150 mm) dump valve configuration. Figure A.19.5.2.2(b) shows a diagram of a peripheral jet assist arrangement.

A pneumatic system can be used to pressurize a tank and assist in expelling water. The vacuum pumps can also be used for filling the tank.

A.19.6.1 If the tests of some components of the apparatus are being certified by an independent third-party certification organization, the purchaser might wish to specify that the water tank capacity also be certified by the independent third-party certification organization.

A.20.1 If the purchaser intends to suspend personnel or equipment from the aerial device using wire ropes or chains, the purchaser should inform the manufacturer of the intended use in order to determine proper mounting devices and locations as well as associated capacities. Equipment users have the potential to overload the aerial device components if improper methods are used.

A.20.2.13 If the fire department expects to engage in operations where they will need to supply remote breathing air from the system on the aerial ladder to fire fighters working away from the end of an aerial ladder, such as during a rescue operation in a fuel or chemical tank, coal bin, or silo storage tower, it will be necessary to be able to supply breathing air for at least two persons.

A.20.3.4 Ladder capacity ratings are established in many different operating positions other than full extension and zero degrees elevation. Ladders are often rated at higher tip capacities as elevation angles increase or when the ladder is not fully extended. Most manufacturers provide distributed load capacities (several persons), depending on the ladder's extension and elevation. Combination ratings that include capacity at the tip while discharging water are normally provided. These can vary with elevation and extension and are examples of multiple configurations. It is important that the manufacturer clearly define for the user the ladder's rated capacity in various positions and operation modes.

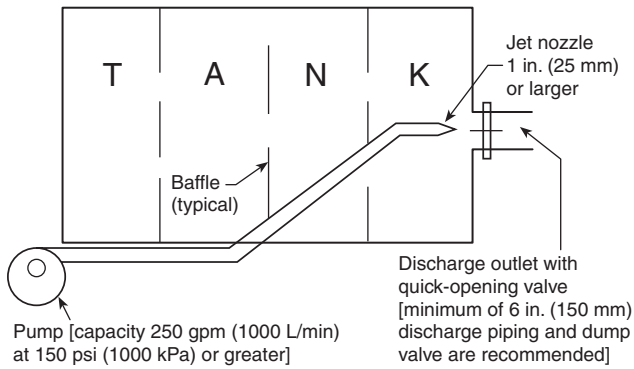

FIGURE A.19.5.2.2(a) Traditional Internal Jet Dump.

Copyright National Fire Protection Association
Provided by IHS under license with NFPA
No reproduction or networking permitted without license from IHS
Not for Resale

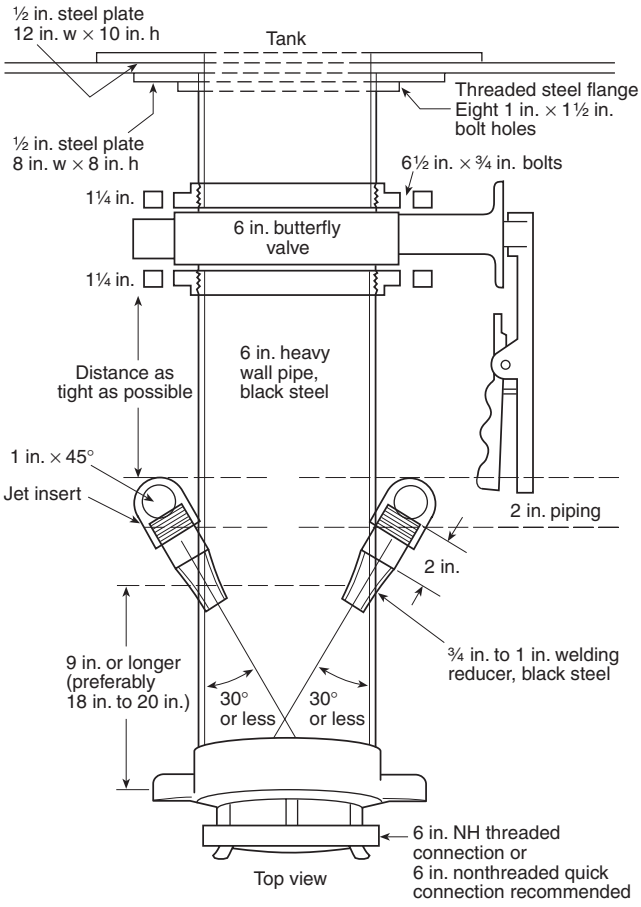

For SI units, 1 in. = 25.4 mm.

FIGURE A.19.5.2.2(b) Peripheral Jet Assist Arrangement (Top View).

A.20.4.3.1 A two-way communication system at two positions on the apparatus is considered a minimum. Depending on the configuration of the apparatus, the purchaser might want to consider communication systems at additional positions, such as at a pump panel or at the monitor operating position on the ladder.

A.20.5.2.1 Turntable bearing bolts are required to be checked and retorqued at regular intervals. The apparatus body should be constructed so as to make this task relatively simple by unbolting access panels, ladder slides, and other obstructions. Space should be provided for checking and torquing of the bearing bolts above and below the turntable using the appropriate tools.

A.20.5.4 The controls located at the tip of an aerial ladder are intended primarily to perform the final positioning of the aerial ladder in rescue or other fire-fighting operations. These controls are not intended to replace the lower control position as the primary operating position for the aerial ladder. Where the tip control is used, the operator(s) needs to take the following precautions:

(1) Tip control operators need to be aware of personnel who are on the ladder sections behind them.
(2) Lower control operators need to remain in position and deactivate the tip controls when anyone is moving on the ladder.
(3) Tip control operators need to take care to place their feet on the steps at the tip to avoid injury to their feet from the moving ladder sections below.
(4) Tip control operators need to be belted in position to protect against abrupt or unexpected ladder movements.

A.20.6.1 The arrangement of the waterway could be a telescoping pipe to a fly section or a nontelescoping pipe to the tip of the base section.

A.20.6.1.3.5 The tip of an aerial ladder should be capable of being positioned up to a window or other location to allow fire fighters and civilians to climb onto the aerial ladder easily. It might be preferable to keep the monitor behind the last rung of the fly section to protect it in the road position.

A.20.6.1.5 The arrangement of the external inlet should be specified by the purchaser based on the intended local operation in supplying water to the waterway.

If the normal operations are to supply the waterway through the external inlet, a valve should be provided where large diameter hose is to be used. A valved three- or four-inlet siamese should be provided when 2½ in. or 3 in. (65 mm or 75 mm) supply lines are used. Attention should be given to the inlet arrangement to limit friction loss. Also, if the apparatus is equipped with a fire pump and the purchaser wants to use the auxiliary inlet as a discharge, a slow-operating valve needs to be installed in the riser to the swivel.

A.20.6.1.8 Where freezing conditions are expected, an automatic drain valve should be specified in order to drain the waterway when water is not flowing.

A.20.6.2 If the purchaser wants extra length on the hose, a two- or three-inlet siamese, or a shutoff at the base of the ladder, these should be specified. The purchaser might also wish to specify a 500 gpm (2000 L/min) minimum spray nozzle.

The size of hose used to supply the ladder pipe has been considered by the aerial ladder manufacturer in the design of the ladder. Use of larger size hose could overload the ladder with excessive weight and should be avoided without first consulting the aerial ladder manufacturer.

The hose should be fastened in a straight line up the middle of the aerial ladder. Hose straps not only secure the hose in place but take the strain off couplings and fittings that might otherwise fail and cause injury.

Where the purchaser wants pulleys and rope for vertical control of the stream from the turntable, the purchaser should specify these.

A.20.9.2.1 A two-way communication system at two positions on the apparatus is considered a minimum. Depending on the configuration of the apparatus, the purchaser might want to consider communication systems at additional positions such as the pump panel.

A.20.10.1 Position lights on the outer corners of the platform can be helpful in providing increased visibility of the platform's location from the ground operator's position.

A.20.10.3.1 See A.20.5.2.1.

A.20.12.3.4 Because the water system can be closed at both the top and bottom of the waterway, the purchaser might want to require a vacuum relief valve.

--`,,```,,,,````-`-`,,`,,`,`,,`---

Copyright National Fire Protection Association
Provided by IHS under license with NFPA
No reproduction or networking permitted without license from IHS
Not for Resale

A.20.12.5 The arrangement of the external inlet should be specified by the purchaser based on the intended local operation in supplying water to the waterway. If the normal operations are to supply the waterway through the external inlet, a valve should be provided where large diameter hose is to be used. A valved three- or four-inlet siamese should be provided when 2½ in. or 3 in. (65 mm or 75 mm) supply lines are used. Attention should be given to the inlet arrangement to limit friction loss. Also, if the apparatus is equipped with a fire pump and the purchaser wants to use the auxiliary inlet as a discharge, a slow-operating valve needs to be installed in the riser to the swivel.

A.20.12.9.1 Where freezing conditions are expected, an automatic drain valve should be specified in order to drain the waterway when water is not flowing.

A.20.15.3.1 See A.20.5.2.1.

A.20.16.5 The arrangement of the external inlet should be specified by the purchaser based on the intended local operation in supplying water to the waterway. If the normal operations are to supply the waterway through the external inlet, a valve should be provided where large diameter hose is to be used. A valved three- or four-inlet siamese should be provided when 2½ in. or 3 in. (65 mm or 75 mm) supply lines are used. Attention should be given to the inlet arrangement to limit friction loss. Also, if the apparatus is equipped with a fire pump and the purchaser wants to use the auxiliary inlet as a discharge, a slow-operating valve needs to be installed in the riser to the swivel.

A.20.16.9 Where freezing conditions are expected, an automatic drain valve should be specified in order to drain the waterway when water is not flowing.

A.20.17.5 It might be desirable to provide an override system to deactivate the interlocks when it is necessary to operate the device with reduced payload or reach. Where an override system is specified, it should require the action of a person in addition to the operator to deactivate the interlock system. Where an override system is provided, it is also advisable to provide an indicator at all aerial device operating positions to warn the operator that the override controls have been activated.

A.20.18.1 If the operator's position is located on the turntable, the operator should have at least 5 ft^2 (0.46 m^2) of standing and working space exclusive of other space required. The purchaser should specify any special requirements for the operator's position or for other space required on the turntable for personnel to stand or work.

A.20.18.2 Aerial ladder operational controls should be located such that the operator can see the tip of the aerial ladder in all operating positions. The operator's position is often located on the turntable.

A.20.19.7 While this standard requires the hydraulic system to have adequate cooling for continuous operation for 2½ hours, prolonged operations under adverse environmental conditions could cause the hydraulic oil to rise in temperature beyond its recommended temperature range. The purchaser might wish to specify an indicator and an alarm that warns the operator if the fluid temperature begins to overheat.

A.20.20.1 Structural safety factors are widely recognized terms in good engineering practice but can be unfamiliar to those using this standard.

The following combination of loads should be evaluated to determine compliance with this standard. To clarify, the terms are defined as follows:

Dead Load Stress (DL). Stress produced by the aerial device structure and all materials, components, mechanisms, or equipment permanently fastened thereto. If this equipment is installed by the manufacturer before delivery, it is included in the dead load. Equipment added to the aerial device by the fire department that exceeds the manufacturer's recommendations needs to be subtracted from the rated capacity.

Rated Capacity Stress (RL). Stress produced by the rated capacity of the aerial device applied at the tip of the fly section for an aerial ladder [minimum 250 lb (114 kg) at an elevation of zero degrees and full extension] or on the platform of an elevating platform apparatus [minimum 750 lb (340 kg) at an elevation of zero degrees and full extension].

Water Reaction Stress (WL). Stress produced by nozzle reaction force and the weight of the water in the water delivery system.

Material Yield Strength (FY). The stress at which a material exhibits a specified permanent distortion or set.

(1) With no water in the system, the aerial device positioned at full extension, zero-degree elevation, and loaded at the rated capacity, the criterion for structural safety is as follows: the stress produced by two times the dead load stress (*DL*) plus the stress produced by two times the rated capacity stress (*RL*) should not exceed the material yield strength (*FY*), as shown in the following equation. This is a 2:1 safety factor.

$$2 \times DL + 2 \times RL \leq FY$$

(2) With water flowing in the system and the aerial device in the position that creates the highest stress, the criterion for structural safety is as follows: the stress produced by two times the dead load stress (*DL*) plus the stress produced by two times the rated capacity stress (*RL*) plus the stress produced by the water reaction stress (*WL*) should not exceed the material yield strength (*FY*), as shown in the following equation:

$$2 \times DL + 2 \times RL + WL \leq FY$$

Other combinations of loading, including wind loads, ice loads, and impact loads, can be included as additional live loads in determining structural safety factors and rated capacities.

A.20.21.1 Water, hose, ground ladders, and other equipment on the apparatus all provide stability when they are in place. However, at a fire, this equipment and water are often removed. Therefore, stability needs to be measured under worst conditions, which is with the equipment removed.

A.20.24.2.7 The lifting of a tire or stabilizer on the opposite side of the apparatus from the load does not necessarily indicate a condition of instability.

A.20.25 The purchaser might wish to specify that this test be conducted with the certification tests required by Section 20.24 and the test results be certified by the independent third-party certification organization.

A.21.1 It is important for the purchaser to understand the types and properties of mechanical foam and its application to specify a foam proportioning system properly. Specific information regarding foam concentrates and their application is available in NFPA 11, *Standard for Low-, Medium-, and High-Expansion Foam.* Information on foam concentrates for Class A fires is available in NFPA 1150, *Standard on Fire-Fighting Foam Chemicals for Class A Fuels in Rural, Suburban, and Vegetated Areas.*

--`,,```,,,,````-`-`,,`,,`,`,,`---

Copyright National Fire Protection Association
Provided by IHS under license with NFPA
No reproduction or networking permitted without license from IHS
Not for Resale

The following terms are not used in this document but are associated with foam systems and are included here to aid understanding.

Aerated Foam. The end product of a discharge of foam solution and air.

Aspirate. To draw in air. Nozzle aspirating systems draw air into the nozzle to mix with the agent solution.

Aspirated Foam. The end product of a mechanically induced air stream that is drawn into the foam solution at atmospheric pressure to create foam. The aeration is generated by the energy of the foam solution stream.

Automatic Regulating Proportioning System. A proportioning system that automatically adjusts the flow of foam concentrate into the water stream to maintain the desired proportioning ratio. These automatic adjustments are made based on changes in water flow or conductivity.

Batch Mix. The manual addition of foam concentrate to a water storage container or tank to make foam solution.

Foam Blanket. A body of foam used for fuel protection that forms an insulating and reflective layer from heat.

Injector. A device used in a discharge or intake line to force foam concentrate into the water stream.

Manually Regulated Proportioning System. A proportioning system that requires manual adjustment to maintain the proportioning ratio when there is a change of flow or pressure through the foam proportioner.

Proportioning Ratio. The ratio of foam concentrate to water, usually expressed as a percentage.

Surface Tension. The elastic-like force in the surface of a liquid that tends to bring droplets together to form a surface.

Wetting Agent. A chemical that reduces the surface tension of water and causes it to spread and penetrate more effectively than plain water, but does not foam.

A.21.2 Foam proportioning systems can be designed with the following features:

(1) The ability to proportion different types of foam concentrate, including Class A and Class B foam concentrates
(2) The ability to proportion foam concentrate at fixed or variable proportioning ratios
(3) The ability to proportion foam concentrate into single or multiple discharge outlets
(4) The ability to supply foam solution and water simultaneously from multiple discharge outlets
(5) Manual or automatic foam proportioning system operation

A.21.2.1 In-line eductor foam proportioning systems are installed in the water pump discharge as a permanently installed device or as a portable device. Water is forced through the eductor venturi by water pump discharge pressure, creating a vacuum that causes foam concentrate to be pushed by atmospheric pressure into the eductor (into the water stream) at the design rate of the device *[see Figure A.21.2.1(a)]*. By design, a nonrecoverable pressure drop of 30 percent or greater is required for eductor operation. The maximum recovered pressure, including friction loss and static head pressure, is nominally 65 percent of the inlet pressure to the eductor. The in-line eductor is a manually regulated proportioning system.

A variable flow bypass eductor system is a modification of the in-line eductor foam proportioning system. An eductor is placed in a bypass line around the mainline water flow control valve so that when the valve is adjusted to produce water flow through the bypass eductor, foam concentrate is drawn into the eductor (into the water stream) *[see Figure A.21.2.1(b)]*. The foam solution in the bypass line is then joined with the mainline water flow downstream of the water flow control valve. The variable flow bypass eductor is a manually regulated proportioning system.

A variable pressure eductor is another modification of the in-line eductor foam proportioning system. This type of eductor is designed to automatically adjust the area of the eductor venturi to compensate for changes in water pressure at the inlet of the device. The variable pressure eductor is a manually regulated proportioning system.

A.21.2.2 Self-educting master stream nozzles are mounted on the discharge side of the pump. These devices make up a complete foam proportioning system consisting of a foam proportioner and application device (nozzle). Self-educting master stream nozzles have the following operating characteristics:

(1) Operator-adjustable foam solution rates of 3 percent or 6 percent
(2) Minimal pressure drop, approximately 1 percent to 2½ percent of inlet pressure

A.21.2.3 An intake-side foam proportioning system is a manually regulated system. An in-line device, installed in the water pump intake line, provides a connection through a foam concentrate metering valve to the foam concentrate tank. The vacuum created by the water pump allows atmospheric pressure to push foam concentrate directly into the pump intake. Hydrant or relay operation is not possible with this type of foam proportioning system.

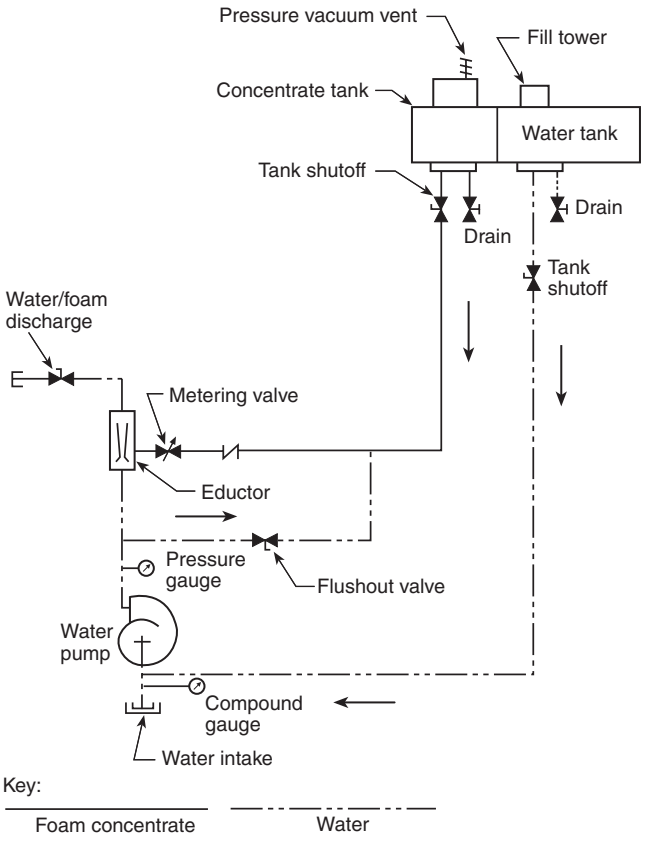

FIGURE A.21.2.1(a) In-Line Eductor Foam Proportioning System.

Copyright National Fire Protection Association
Provided by IHS under license with NFPA
No reproduction or networking permitted without license from IHS
Not for Resale

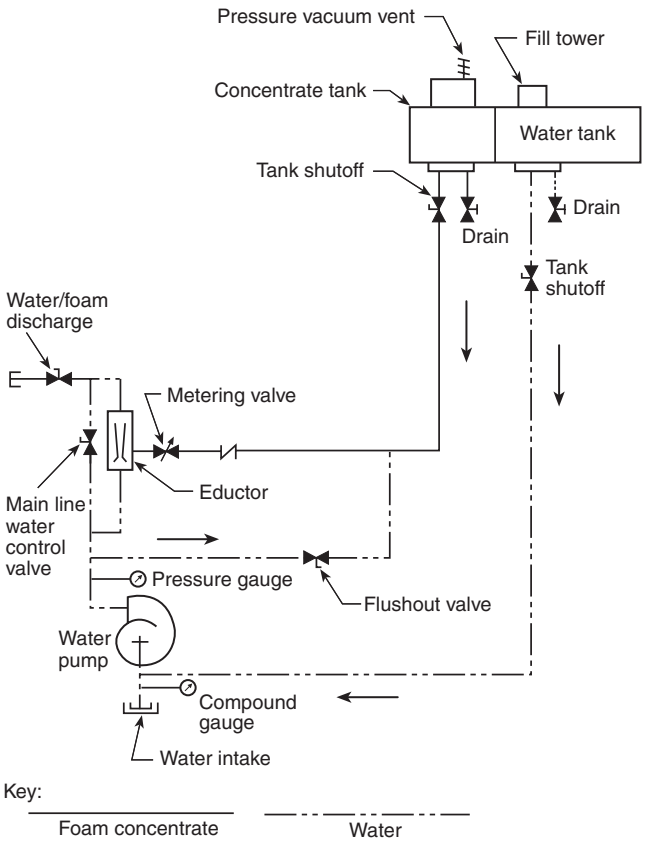

FIGURE A.21.2.1(b) Variable Flow Bypass Eductor System.

A.21.2.4 Around-the-pump proportioning systems operate with an eductor installed between the water pump discharge and the intake. A small flow of water from the water pump discharge passes through the eductor, which creates a vacuum that causes foam concentrate to be pushed into the eductor and discharged into the pump intake. Around-the-pump foam proportioning systems require a pressure differential of 30 percent to 50 percent of inlet pressure for efficient operation.

A manual around-the-pump proportioning system utilizes a manually adjustable foam concentrate metering valve to control the proportioning ratio. *[See Figure A.21.2.4(a).]*

A flowmeter sensing around-the-pump proportioning system utilizes a flowmeter sensing system to monitor total solution flow and foam concentrate flow. The flow data are transmitted to an electronic control that controls the proportioning ratio through a foam concentrate metering valve. *[See Figure A.21.2.4(b).]*

A conductivity-sensing automatic variable metering around-the-pump proportioning system utilizes electrical conductivity meters to sense the foam solution percentage and provide feedback from the control sample module. Data from the electrical conductivity meters are transmitted to an electronic control that controls the proportioning ratio through a foam concentrate metering valve. *[See Figure A.21.2.4(c).]*

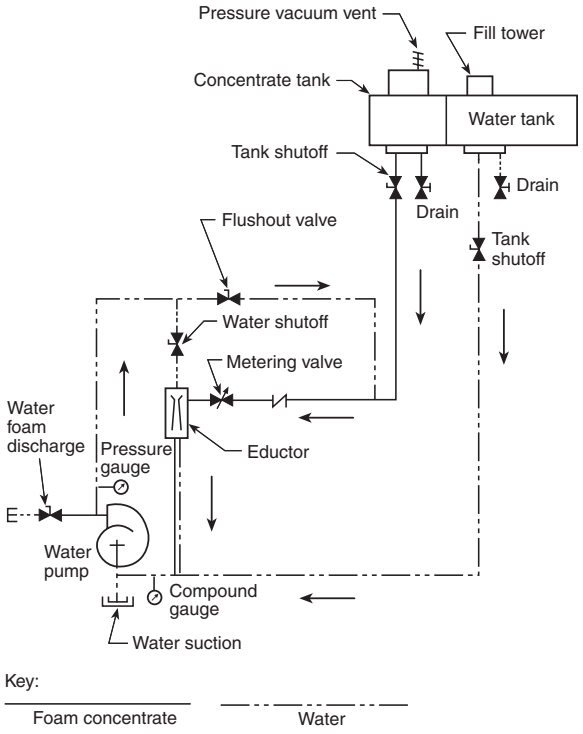

FIGURE A.21.2.4(a) Manual Around-the-Pump Proportioning System.

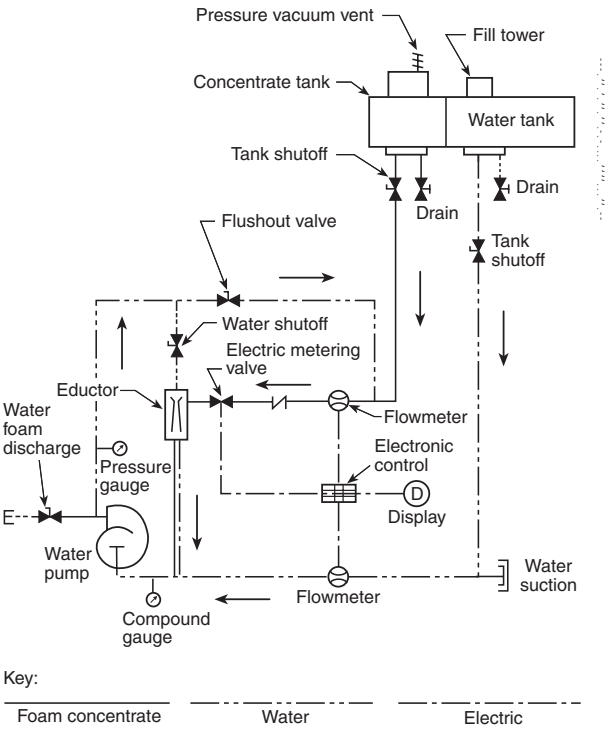

FIGURE A.21.2.4(b) Flowmeter Sensing Around-the-Pump Proportioning System.

Copyright National Fire Protection Association
Provided by IHS under license with NFPA
No reproduction or networking permitted without license from IHS
Not for Resale

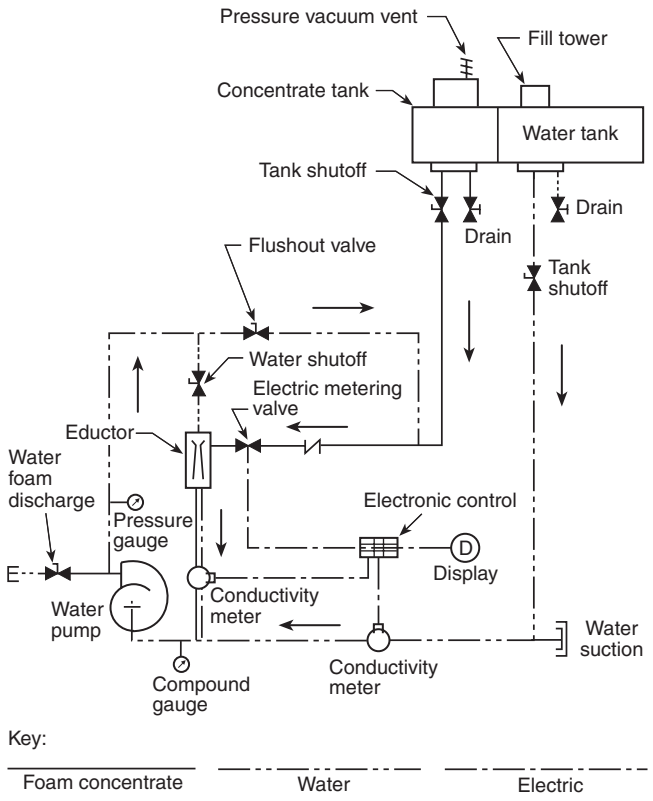

FIGURE A.21.2.4(c) Conductivity-Sensing Automatic Variable Metering Around-the-Pump Proportioning System.

A.21.2.5 Balanced pressure foam proportioning systems are installed on the discharge side of the water pump. Two orifices discharge water and foam concentrate into a common ratio controller (proportioner) located in the water pump discharge. By adjusting the area of the orifices to a particular ratio, the percentage of injection can be controlled if the intake pressures are equal. The method of controlling or balancing the foam concentrate pressure with the water pressure varies with different balanced pressure system designs. The two basic types of balanced pressure systems are systems without a foam concentrate pump and systems with a concentrate pump. Balanced pressure foam proportioning systems generally are automatic regulating proportioning systems.

Balanced pressure systems without a foam concentrate pump are referred to as "pressure proportioning systems" *[see Figure A.21.2.5(a)]*. These systems utilize a pressure vessel with an internal bladder to contain the foam concentrate. When in operation, water pump pressure is allowed to enter the pressure vessel between the shell and the internal bladder to exert pressure on the internal bladder. The foam concentrate is forced out of the bladder to the foam proportioner at a pressure equal to the water pump pressure.

Two basic types of balanced pressure foam proportioning systems utilize a foam concentrate pump: a bypass system and a demand system. Foam proportioning system operation is not affected by water pump intake pressure or interrupted while refilling the foam concentrate tank in these types of foam proportioning systems.

The bypass system utilizes a valve in the foam concentrate pump recirculating line that balances the foam concentrate and water pressure by bypassing excess foam concentrate. *[See Figure A.21.2.5(b).]*

The demand system is designed to control the speed of the foam concentrate pump, resulting in control of the pump discharge pressure to achieve a balance of foam concentrate and water pressure within the system. *[See Figure A.21.2.5(c).]*

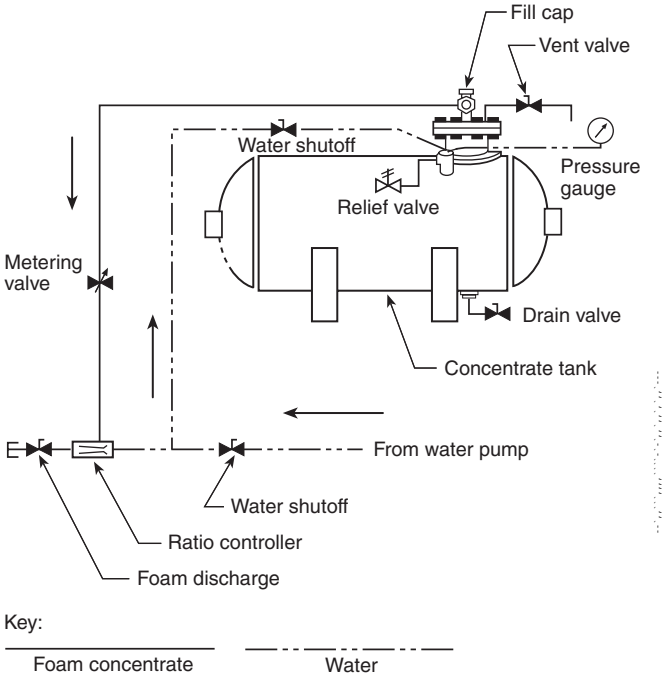

FIGURE A.21.2.5(a) Pressure Proportioning Balanced Pressure Proportioning System.

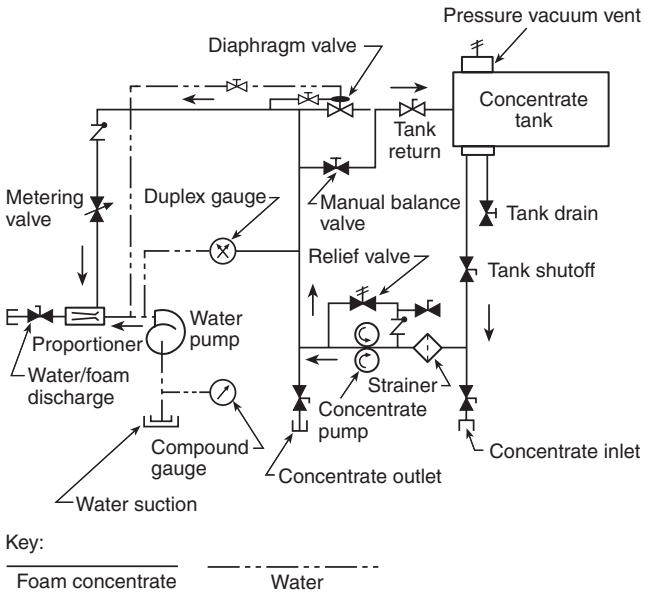

FIGURE A.21.2.5(b) Bypass Balanced Pressure Proportioning System.

Copyright National Fire Protection Association
Provided by IHS under license with NFPA
No reproduction or networking permitted without license from IHS
Not for Resale

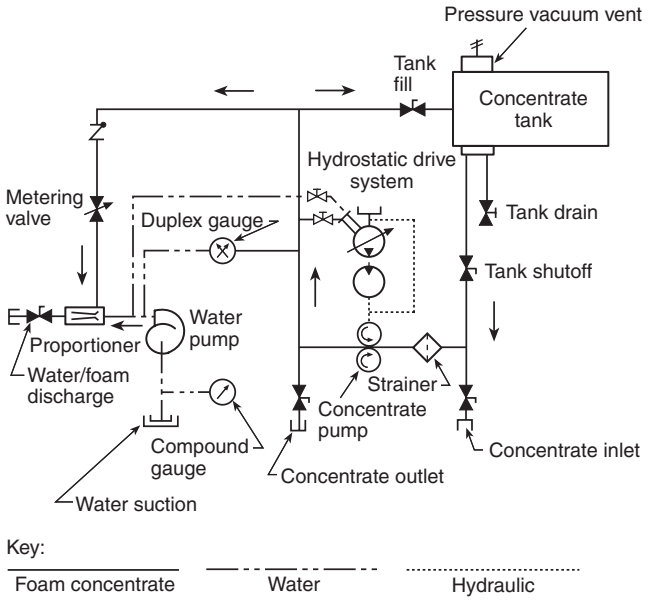

FIGURE A.21.2.5(c) Demand Balanced Pressure Proportioning System.

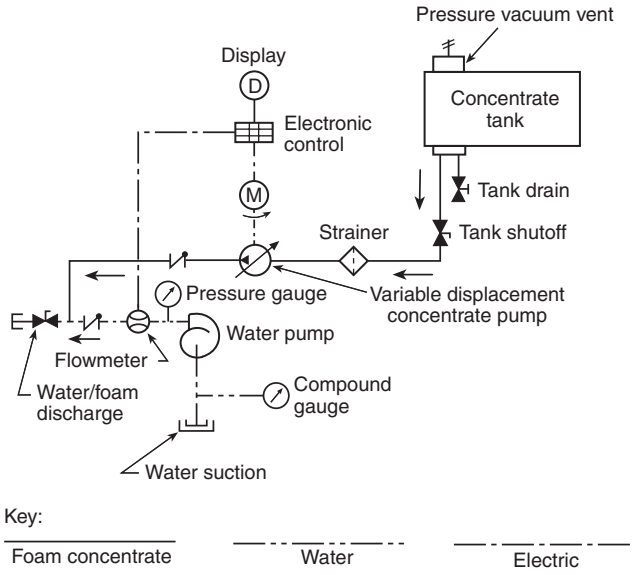

FIGURE A.21.2.6(a) Single-Meter Flow-Sensing Direct Injection Foam Proportioning System.

A.21.2.6 Direct injection foam proportioning systems utilize a foam concentrate pump to inject foam concentrate directly into the water pump discharge. Foam proportioning system operation is not affected by water pump intake pressure or interrupted while refilling the foam concentrate tank. Direct injection foam proportioning systems generally are automatic regulating proportioning systems.

Automatic flow-sensing direct injection foam proportioning systems utilize an in-line flowmeter(s) to monitor the system operating conditions. System operating data are transmitted to an electronic control, which controls the proportioning ratio. Two different flow-sensing systems are available:

(1) An electronic control receives electronic signals corresponding to the proportioning ratio from the control panel and water flow data from the flowmeter. The electronic control then commands the foam concentrate pump module to deliver foam concentrate at the proportional rate. *[See Figure A.21.2.6(a).]*

(2) An electronic control receives electronic signals corresponding to the foam concentrate flow from a foam concentrate flowmeter, the proportioning ratio from the control panel, and water flow data from the water flowmeter. The electronic control controls the proportioning ratio through a foam concentrate metering valve. *[See Figure A.21.2.6(b).]*

A conductivity-sensing direct injection foam proportioning system utilizes an electrical conductivity meter(s) to sense the proportioning ratio at the water pump discharge(s) and transmits this information to an electronic control that controls the proportioning ratio through a metering valve. A second electrical conductivity meter provides feedback from the control sample module to the electronic control. Foam pump pressure is maintained at a pressure higher than water pump pressure to ensure injection of the concentrate. *[See Figure A.21.2.6(c).]*

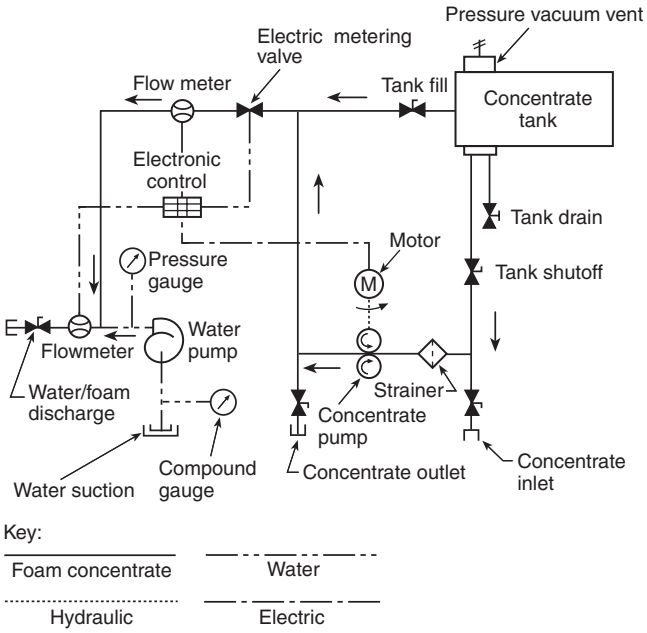

FIGURE A.21.2.6(b) Dual-Meter Flow-Sensing Direct Injection Foam Proportioning System.

A.21.2.7 In a water motor foam proportioning system, a water motor drives a positive displacement foam concentrate pump. The water motor can be of either a positive displacement type or a turbine type. Water motor foam proportioning systems are automatic regulating proportioning systems.

Copyright National Fire Protection Association
Provided by IHS under license with NFPA
No reproduction or networking permitted without license from IHS
Not for Resale

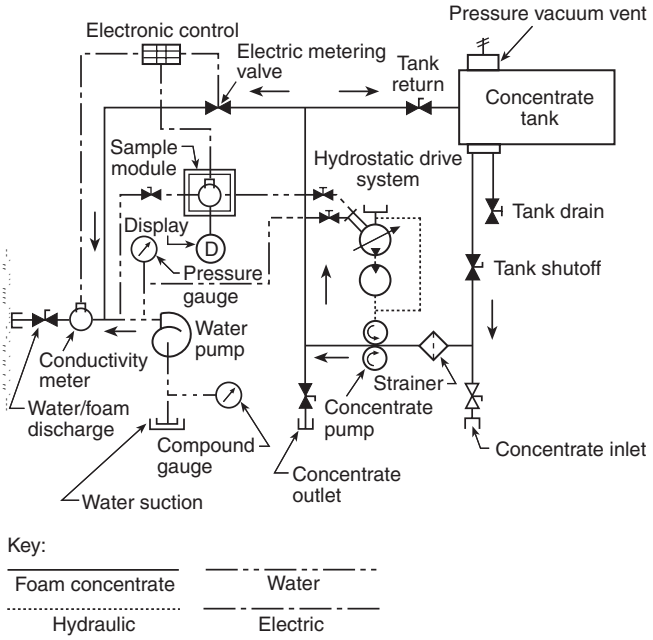

FIGURE A.21.2.6(c) Conductivity-Sensing Direct Injection Foam Proportioning System.

Where a positive displacement water motor drives the foam concentrate pump, the ratio of the water motor displacement to the displacement of the foam concentrate pump is the ratio of the desired foam solution. A positive displacement water motor proportioning system requires no external power. *[See Figure A.21.2.7(a).]*

A water turbine–driven foam proportioning system uses a water turbine to power a positive displacement foam concentrate pump. Flowmeters sense the foam concentrate pump output and the water flow, sending signals to an electronic control that controls the proportioning ratio by adjusting the water turbine speed. *[See Figure A.21.2.7(b).]*

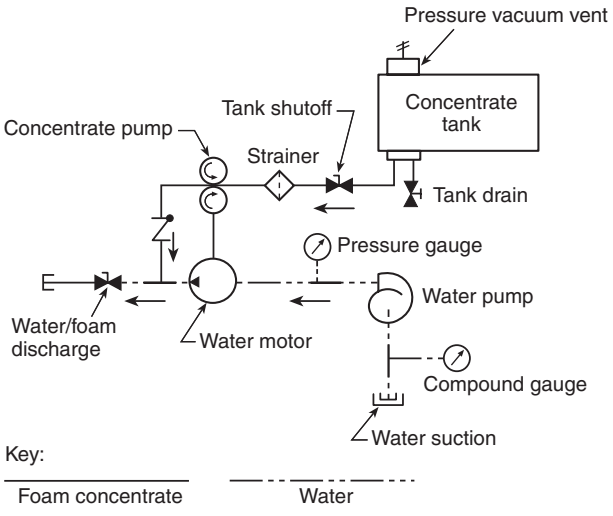

FIGURE A.21.2.7(a) Water Motor Foam Proportioning System.

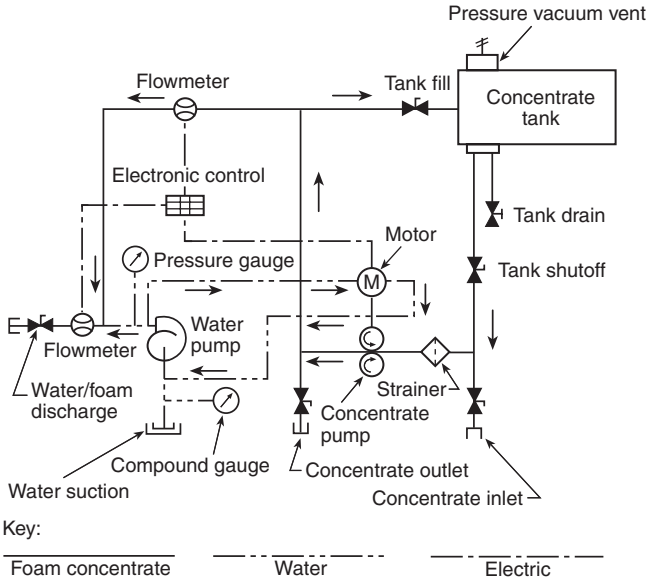

FIGURE A.21.2.7(b) Water Turbine–Driven Flow-Sensing Direct Injection Foam Proportioning System.

A.21.3.1 Foam proportioning systems that inject foam concentrate into the water pumping system at a higher pressure than the water pressure have the potential to force foam concentrate or foam solution into an external water source. This condition will occur when there is no water flowing and the foam proportioning system is activated in the automatic mode. Backflow prevention devices, or any device that creates additional friction loss in the system, should be installed only with the approval and specific instructions of the foam proportioning system manufacturer.

A.21.3.4 Most foam concentrate manufacturers differentiate between the materials they recommend for foam proportioning system components that are designed to be flushed with water after operation and those components that are intended to be continuously wetted with foam concentrate.

A.21.4.1 It is desirable to have a visual indicator on the operator's panel that shows whether the foam proportioning system is in the "operating" position or the "off" position. A visual means of indicating positive foam concentrate flow at the operator's panel is also helpful.

A.21.6.3.2 Suitable means to attach the cover to the fill tower could include use of a threaded cap or a hinged cover with a mechanical latching device.

A.21.6.6 On apparatus where a single foam storage tank is used, provisions should be made to flush the tank and all foam concentrate plumbing to avoid contamination of dissimilar foam concentrates when switching types or brands.

A.21.6.8 The foam concentrate tank(s) can be an integral part of the water tank.

A.21.6.10.2 Different types and brands of concentrates can be incompatible with each other and should not be mixed in storage. Concentrate viscosity varies with different types of products and temperatures.

Copyright National Fire Protection Association
Provided by IHS under license with NFPA
No reproduction or networking permitted without license from IHS
Not for Resale

A.21.7 The foam concentrate pump is a critical component of both balanced pressure and direct injection foam proportioning systems. Positive displacement pumps are recommended for several reasons. Positive displacement pumps are relatively slow in speed compared to centrifugal pumps, which is advantageous with viscous foam concentrates that are difficult to shear. Centrifugal pumps can become airbound when trying to pump viscous foam concentrates, which results in a complete shutdown of the system. The self-priming feature of positive displacement pumps allows them to draw foam concentrate from drums or any external source without priming the pump.

A.21.7.2 Corrosion-resistant materials are materials such as brass, copper, monel, stainless steel, or equivalent materials.

A.21.7.5 A suitable suction device is required to operate from an external source such as 5 gal (19 L) pails, 55 gal (208 L) drums, and portable tanks or containers.

A.21.9.3 It is desirable for in-line eductor systems to have a label that indicates the system flow rate, the maximum usable hose length, the hose size required, the nozzle type, and allowable elevation changes.

A.21.9.3(2) It is necessary for the operator be familiar with the specific types of foam concentrates the foam proportioning system manufacturer has designed the system to operate with and proportion accurately. The foam proportioning system might require modification or recalibration if another foam concentrate is to be used.

A.21.10 If the tests of some components of the apparatus are being certified by an independent third-party certification organization, the purchaser might wish to specify that these tests also be certified by the independent third-party certification organization.

A.21.11.1(3) There are four methods for testing a foam proportioning system for calibration accuracy.

Test Method 1: Substituting Water for Foam Concentrate. The foam system is operated at the water flow rates at which the system is to be tested. Water is used as a substitute for foam concentrate. The substitute water for the foam concentrate is drawn from a calibrated tank, instead of foam concentrate from the foam concentrate tank. The volume of water drawn from the calibrated tank divided by the volume of water pumped over the same time period multiplied by 100 represents the percentage of foam the foam proportioner is producing.

Test Method 2: Measuring Foam Concentrate Pump Output Directly. With some direct-injection systems, it is possible to directly measure the foam concentrate pump output. With the foam system operating at a given water flow rate, and either foam concentrate or water used as a substitute for foam concentrate, the output of the foam concentrate pump is measured by diverting that output into a calibrated container for direct measurement over a measured period of time. An alternative is to measure the foam concentrate flow or water substitute with a calibrated meter.

Test Method 3: Determining Foam Percentage by Use of a Refractometer. A refractometer is used to measure the refractive index of a foam solution sample.

First, a base calibration curve is prepared using the same water and foam concentrate that will be used with the system to be tested. Three known foam solution samples are needed and should include the following:

(1) The nominal intended percentage
(2) The nominal intended percentage plus 1 percent
(3) The nominal intended percentage minus 1 percent

If the nominal intended percent is 1 percent or less, the three samples should be as follows:

(1) The nominal intended percentage
(2) The nominal intended percentage plus 0.3 percent
(3) The nominal intended percentage minus 0.3 percent

The required amount of water is placed in a 100 ml or larger graduated cylinder, leaving space for the foam concentrate. A 10 ml pipette or 10 cc syringe is used to carefully add the required amount of foam concentrate to the water. Each measured foam solution is then poured from the graduated cylinder into a 100 ml or larger plastic bottle, and the bottle is marked to indicate the percentage solution it contains. A plastic-coated magnetic stirring bar is added to the bottle, and the bottle is capped and thoroughly shaken to mix the foam solution.

An alternative method for making the three foam solution samples is to use a very accurate scale. The density of the foam concentrate needs to be known and can be found on the product data sheet or the Material Safety Data Sheet (MSDS) for the foam concentrate. For example, to make a 100 ml sample of a 3 percent foam solution using a foam concentrate with a density of 1.04, 97 g of water is measured into a beaker and 3.12 g of foam concentrate is added to the beaker ($1.04 \cdot 3$ g = 3.12 g).

After the foam solution samples are thoroughly mixed, a refractive index reading is taken of each foam solution sample. This is done by placing a few drops of the solution on the refractometer prism, closing the cover plate, and observing the scale reading at the dark field intersection. Because the refractometer is temperature compensated, it could take 10 seconds to 20 seconds for the sample to be read properly. It is important to take all refractometer readings at ambient temperatures of 50°F (10°C) or above.

Using standard graph paper, the refractive index readings are plotted on one axis and the percentage of concentration on the other. This plotted curve serves as the known baseline for the test series. The solution samples should be set aside in the event the measurements need to be checked.

Foam solution samples are then collected from the proportioning system, making certain that the samples are taken at an adequate distance downstream from the foam proportioner being tested to allow for complete mixing of the water and the foam concentrate. Refractive index readings of the samples are taken and compared to the plotted curve to determine the percentage of foam.

This method might not be accurate for AFFF, alcohol-resistant foam, or certain other types of foam that typically exhibit very low refractive index readings. Also, the refractometer method should not be used when testing foam percentages of 1 percent or lower because the accuracy for determining the percentage of foam concentrate in a solution when using a refractometer is ±0.1 percent, at best. For this reason, test method 4, the conductivity method, might be preferable where AFFF, alcohol-resistant foam, or 1 percent or less foam (Class A foam) is to be tested.

Copyright National Fire Protection Association
Provided by IHS under license with NFPA
No reproduction or networking permitted without license from IHS
Not for Resale

Test Method 4: Determining Foam Percentage by Use of a Conductivity Meter. The conductivity test method is based on changes in electrical conductivity as foam concentrate is added to water. Conductivity is a very accurate method, provided there are substantial changes in conductivity as foam concentrate is added to the water in relatively low percentages. Because saltwater and brackish water are very conductive, this method might not be suitable where such water is used because of the small conductivity changes as foam concentrate is added. If saltwater or brackish water is used, it is necessary to make foam solutions in advance to determine if adequate changes in conductivity can be detected. This method cannot be used if the water has more total solids than the foam concentrate.

The following three variations of this test method can be used to determine the foam percentage by the conductivity method:

(1) *Direct Reading Conductivity Method.* A sample of the water to be used in the test is put in a 100 ml or larger container. The conductivity meter head is immersed in the water sample, and the meter display is set at zero. If the direct reading foam solution conductivity meter is mounted in a discharge line, the meter should be set at zero with plain water flowing.

If the conductivity meter manufacturer does not indicate that the percentage of foam solution can be read directly for the foam concentrate being used, a calibration curve needs to be developed. The calibration curve might show that the direct meter readings are correct for the foam concentrate being used, or it might indicate that the calibration curve needs to be used when that foam concentrate is used in the test.

The foam proportioning system is operated, and a sample of the foam solution produced by the system is collected using a 100 ml or larger container. The conductivity meter head is immersed in the foam solution sample, and the percentage of the foam solution is read on the meter display. If the conductivity meter is mounted in a discharge line, the percentage of the foam solution is read on the meter display while foam solution is being discharged.

(2) *Conductivity Comparison Method.* A sample of the water to be used in the test is put in a 100 ml or larger container. Using a conductivity meter reading in microsiemens per centimeter (mscm), the conductivity valve of the water sample is determined. The foam proportioning system is operated, and a sample of the foam solution produced by the system is collected in a 100 ml or larger container. Using the conductivity meter, the conductivity value of the foam solution sample is determined.

The conductivity value of the water sample is subtracted from the conductivity value of the foam solution sample, and the result is divided by 500 to obtain the percentage of foam concentrate in the solution.

$$\% \text{ foam} = \frac{\text{Conductivity of foam solution} - \text{Conductivity of water}}{500}$$

Note that the divisor is 500 only if the conductivity meter units are microsiemens per centimeter. Other units of conductivity can be used, but the value of the divisor (500) will need to be adjusted.

(3) *Conductivity Calibration Curve Method.* A base calibration curve is prepared using the water and foam concentrate from the system to be tested. Three known foam solution samples are made using the procedure in test method 3. After the foam solution samples are thoroughly mixed, the conductivity of each solution is measured using a conductivity meter. Care should be taken to ensure that the proper procedures are used for taking readings and that the meter is switched to the correct conductivity range. Most synthetic-based foams used with freshwater result in foam solution conductivity readings of less than 2000 mscm. Protein-based foams used with freshwater generally produce conductivity readings in excess of 2000 mscm. Because of the temperature-compensation feature of the conductivity meter, it could take a short time to obtain a consistent reading.

Once the solution samples have been measured and recorded, the bottles should be set aside as control sample references. The conductivity readings then should be plotted on standard graph paper. It is more convenient to place the foam solution percentage on the horizontal axis and the conductivity readings on the vertical axis.

A straight line should be drawn that approximates the connection of all three points. While it might not be possible to connect all three points with a straight line, they should be very close. If not, the conductivity measurements should be repeated, and, if necessary, new control sample solutions should be prepared and used until all three points plot in a nearly straight line. This plot serves as the known base (calibration) curve to be used for the test series.

Once a base curve has been plotted, foam solution samples are collected from the proportioning system. The conductivity of the test samples is measured, and the percentage of foam solution is determined from the base curve. Foam solution samples that have been allowed to drain from expanded foam should not be used, because they can produce misleading conductivity readings.

A.22.1 The following terms are not used in this document but are associated with compressed air foam systems and are included here to aid in understanding.

Chatter. An unacceptable flow condition wherein air is not fully mixed with the foam solution.

High Energy Foam Generator. A foam generator that uses a large amount of external energy to aerate the foam.

Low Energy Foam Generator. A foam generator that uses energy of the foam stream to aerate the foam.

Mixing Chamber. A device used to produce fine, uniform bubbles in a short distance as foam solution and air flow through it.

Scrubbing. The process of agitating foam solution and air in a confined space such as a hose, pipe, or mixing chamber to produce tiny, uniform bubbles.

Slug Flow. The discharge of distinct pockets of water and air due to the insufficient mixing of foam concentrate, water, and air in a compressed air foam system.

Surge. The sudden decompression of a discharge line caused by the rapid opening of the discharge appliance.

A.22.2.1 It is preferable that the concentrate proportioning system be automatic, inject into the discharge side of the pump, and proportion at a minimum water flow of 2 gpm (8 L/min).

A.22.2.4 It is recommended that compressed air not be injected into the water/foam discharge piping until the flow of water/foam solution has been established in the discharge piping. The nozzle reaction at the end of a hose can be quite high if just air or air and water with no foam solution are flowing in the discharge line. The nozzle reaction could be a safety issue with an operator that is not expecting or not properly braced to withstand this reaction force. The reaction force is substantially reduced when a foam solution is flowing in the discharge hose.

--`,,```,,,,````-`-`,,`,,`,`,,`---

Copyright National Fire Protection Association
Provided by IHS under license with NFPA
No reproduction or networking permitted without license from IHS
Not for Resale

A.22.2.5 Pressure in the form of compressed air can remain trapped in a CAFS as a result of deactivating the system. It is important for the operator to relieve any pressure in the foam proportioning system and connected hose lines before disconnecting hose lines or performing any operation that opens the system to atmosphere.

A.22.4 If the expansion ratio is to be tested, the following equipment and test procedures are recommended:

(1) Gram scale, 1500 g capacity accurate to 0.1 g
(2) One 1000 ml container that can be struck at 1000 ml (a 1000 ml graduated cylinder cut off at 1000 ml works well)

The empty container is placed on the scale, and the scale is set to zero. Using the container, a full sample of foam is collected and the foam is struck at the 1000 ml level. The container is placed on the scale and the mass is read in grams.

$$\text{Expansion} = \frac{100}{\text{Foam mass in grams}}$$

The foam mass in grams assumes that 1 g of foam solution occupies 1 ml of volume.

A.22.5 Any components of the piping system exposed to pressurized air from the CAFS should be designed for a burst gauge pressure of at least 500 psi (3400 kPa).

A.22.7.6 Some systems provide automatic regulation of the water flow; however, instrumentation is still useful to the operator. Even automatic systems have adjustments and performance limits that warrant instrumentation. Where the system design does not allow for such automatic regulation, or where the operator has the ability to control water flow or airflow, air and water flowmeters are necessary for the operator to monitor the operational performance of the CAFS where the nozzle person cannot be seen. Where pumping long hose lays or pumping to great heights, the operator needs to know what is flowing in order to be certain the proper product is being delivered.

A.22.9 If the tests of some components of the apparatus are being certified by an independent third-party certification organization, the purchaser might wish to specify that these tests also be certified by the independent third-party certification organization.

A.22.9.1.3.3 Care should be taken to avoid injuries to personnel from the discharging airstream. Only those persons actually conducting the tests should be in the test area, and they should wear protection for their ears, eyes, and face from noise and dust during the airflow test.

A.22.9.2 The person conducting the test should check with the manufacturer of the hose being used to ensure the hose has been approved for use with CAFS.

A.23.1 A typical electrical system might consist of a generator system that is bonded to the chassis frame rail. Conductors making up the power supply assembly include the neutral conductor (N), grounding conductor (G), and line voltage conductors (L_1, L_2, L_3).

The neutral conductor of the power supply assembly is grounded to the generator frame. This is the only location that the neutral conductor is grounded in the entire system. The power supply assembly terminates at the panelboard for distribution to the rest of the system. Figure A.23.1 shows a typical system on a fire apparatus.

It is the responsibility of the purchaser to provide the contractor with sufficient information to enable the contractor to supply an electrical system that will meet the needs of the fire department.

For each piece of line voltage electrical equipment installed on the apparatus or operated using the apparatus line voltage electrical system, the purchaser should provide the following information:

(1) The type of electrical current required, that is, alternating current (ac), direct current (dc), or either ac or dc, as follows:
   (a) If ac is required, the nominal operating voltage, the maximum amperage, and whether it is single-phase or three-phase. For electronic equipment and some motors, the required quality of the ac power should also be stated, including the upper and lower limits of voltage and the allowable variation of frequency and wave form.
   (b) If dc is required, the nominal operating voltage and the maximum operating current. For special equipment, the required quality of the dc power should also be stated, including the upper and lower limits of voltage and the amount of ripple voltage.
(2) The required minimum continuous output wattage of the electrical source or sources that power the system, or if more than one type of current or voltage is required, the maximum output wattage for each type of current or voltage.
(3) If an earth grounded system is required, the details of grounding rods, plates, clamps, or other means to establish bonding of the apparatus and the power source to the earth.

Generally, the line voltage electrical system should be sized based on the total amount of fixed and portable equipment that is likely to be operated at the same time. In view of the increasing use of line voltage devices on apparatus, the provision of a line voltage electrical system of sufficient capacity is strongly recommended. Where line voltage equipment use is extensive, a separately driven generator is recommended.

Where only incandescent lighting is involved, ac or dc power can be used. Where other electrical devices such as motor-driven equipment or electronic equipment are involved, single-phase ac power at 60 Hz is normally required. However, because of the substantial reduction of size and cost that results from three-phase operation, ac motors larger than 5 hp are usually designed to operate on three-phase ac current. Attempting to operate electrical equipment using the wrong type of electrical power will almost always damage the electrical equipment.

If premises wiring or other fixed wiring systems are to be powered by the generator, the installation should be preplanned and in accordance with NFPA 70, *National Electrical Code*, for that intended purpose. Grounding of the system should comply with Section 250.20, "Alternating-Current Circuits and Systems to Be Grounded," and other applicable sections of NFPA 70.

A.23.2.4 Portable line voltage electrical equipment added by the fire department should also be listed and utilized only in accordance with the manufacturer's instructions.

A.23.2.6.4 While a splash shield will lessen the amount of road spray that reaches the generator, it will not protect the generator if the apparatus is driven through deep water. Care should also be taken if the apparatus is driven offroad, because a splash shield is not a skid pan and will not protect the generator from physical abuse.

--`,,```,,,,````-`-`,,`,,`,`,,`---

Copyright National Fire Protection Association
Provided by IHS under license with NFPA
No reproduction or networking permitted without license from IHS
Not for Resale

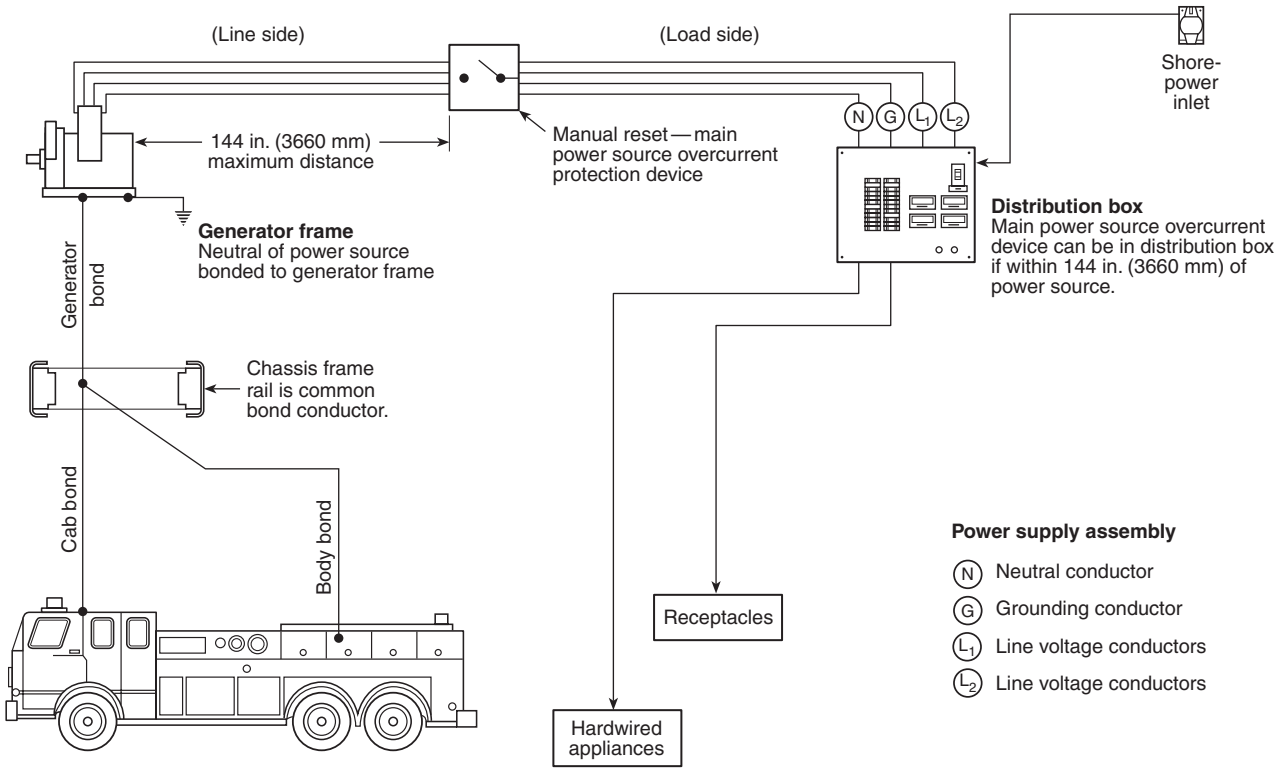

FIGURE A.23.1 Typical Line Voltage Electrical System.

A.23.3.1 Because of the non–earth grounded nature of apparatus-mounted line voltage equipment and the wet environment in which it operates, great care should be taken in the use and maintenance of such line voltage circuits and equipment. Ground fault protection for personnel should be furnished through an assured equipment grounding conductor program in accordance with Section 527.6(B), "Use of Other Outlets," of NFPA 70. All cord sets, receptacles, and electrical equipment should be maintained in accordance with NFPA 70B, *Recommended Practice for Electrical Equipment Maintenance*.

This protection can be supplemented by the use of ground fault circuit interrupters (GFCIs). These GFCIs should be attached to the end of distribution cords and located close enough to the equipment being operated that the GFCIs can be conveniently reset in the event they trip. Locating GFCI devices as close as possible to the end of a cord will reduce tripping caused by stray capacitance and leakage associated with long cord lengths and multiple connections.

While this arrangement is desirable for fire service operating conditions and does protect fire fighters who are operating tools and lights downstream of the GFCIs, no ground fault protection is provided between the electrical source and the GFCIs.

A.23.4.3 The following factors could be relevant to power source testing, depending on the type of power source:

(1) *Sampling.* The selection of test unit(s) should be representative of the construction and settings for units that will be supplied to the apparatus manufacturer. The standard does not require that all production units be tested; however, the power source manufacturer should test as needed to maintain confidence in his declaration of the continuous duty rating for all production.

(2) *Clearances, cooling, and ventilation.* Testing should be conducted at the worst-case clearance (usually minimum clearance or minimum compartment size) and worst-case ventilation conditions (minimum inlet/outlet dimensions and maximum inlet/outlet restrictions) specified in the literature. If not in the literature, the power source manufacturer's declaration should indicate the clearances, compartment size, and ventilation that are applicable to the declared continuous duty rating.

(3) *Test duration.* "Continuous" ratings are usually established by tests run until thermal stabilization is achieved. A minimum test of two hours, matching the in-apparatus test duration indicated in 23.16.5.3.4, is recommended.

(4) *Air inlet temperature.* Power sources should be tested in a chamber or room where the air temperature supplied to all inlet ducts (radiators, engine induction, windings, heat sinks, etc.), and the air surrounding the test unit, is maintained at 120°F (49°C).

(5) *Barometric pressure.* Pressure (air density) varies with changes in altitude and weather. Its effect is generally greatest on engines, where it affects combustion and cooling efficiency. There is a lesser effect on wound machines due to cooling only. To show compliance with the 2000 ft (600 m) requirement, a test in a chamber simulating 2000 ft (600 m) would be ideal, but is not expected. Alternatively, connecting more or less than the rated load can be used to simulate/demonstrate that the engine is capable of the power required for rated output at 2000 ft (600 m). (Several standards organizations, such as SAE and ISO, have standards that describe how to compute load/output correction factors for barometric pressure.)

Copyright National Fire Protection Association
Provided by IHS under license with NFPA
No reproduction or networking permitted without license from IHS
Not for Resale

(6) *Fuel temperature.* Fuel supply for the test should be stabilized at 120°F (49°C) before testing. Increases in fuel tank temperature that may occur as a result of fuel returned to the tank should be controlled so as to provide a result that is representative of expected fuel temperature conditions for the fire apparatus.

(7) *Intake and exhaust restrictions, accessories, hydraulic pumps, and reservoirs.* Components and accessories that may reduce engine power available for electrical output or that consume electrical output from the power source should be installed and be of the type used for the model that will be ordered for fire apparatus use, or their effect should be separately determined and reflected in the certified output.

(8) *Break-in.* Acceptance of a reduced output rating until completion of an in-use break-in period is subject to the prior agreement of the apparatus manufacturer, who may request test evidence. When applicable, the reduced output amount and duration of the break-in period should be indicated in the power supply literature.

(9) *Voltage and frequency.* Tests should be run while maintaining the ±10 percent voltage and ±3 Hz frequency required by 23.2.1. Furthermore, settings for voltage and frequency should be representative of production units.

(10) *Engine speed and hydraulic flow/pressure.* The engine speed and/or hydraulic flow and pressure ranges indicated in the power source's literature should be used to verify that the declared ratings are achievable.

(11) *Hydraulic fluid temperature.* The entire hydraulic power supply system, including hydraulic fluid piping and reservoir, should be located within a test chamber where temperature is controlled to maintain 120°F (49°C). Hydraulic fluid reservoirs should be stabilized at the ambient air test temperature [120°F (49°C)] prior to the testing.

(12) *Component and material temperatures.* Although not specified in the standard, when a power supply designed for light-duty use in open air is proposed for fixed fire apparatus use, the power source manufacturer should evaluate the components to determine whether they will operate within their rated or design temperature limits.

A.23.4.6.3 The instrumentation should be protected from vibration, which can lead to false readings. Particular attention should be paid to reed-type frequency indicators. Digital electronic instrumentation should be selected that incorporates sample times and intervals that accurately report system performance under varying conditions.

A.23.4.8 The indicator lights and interlocks specified in this section are minimum. Some manufacturers or users might choose to add additional indicator lights or interlocks.

A.23.4.8.3 Generators are operated from the side, top, front, or rear of the apparatus, and stationary operation requires that no power is applied to the wheels while operating. Therefore, it is essential that any generator system controls, which shift the apparatus out of the road mode of operation to place the generator system in operation, be equipped with a means to prevent dislocation of the control from its set position in the power generation mode.

A.23.5.1 Completion of the generator shift might require that the chassis transmission be shifted into the proper gear (split shaft PTOs only).

A.23.6.1.1 A PTO generator system typically consists of a propulsion engine, a controller to regulate the propulsion engine's speed, an appropriate PTO arrangement, drivetrain components, a generator, and other miscellaneous parts.

When a generator and fire pump are both direct driven by the same engine and are both operated at the same time, fire pump performance is limited to the generator set speed, and pump pressure is controlled by a pressure relief valve.

Due to variable engine speeds causing uncontrolled voltage and frequency variation, direct drive generators are not acceptable for fire apparatus where "generate and roll" capability is required. Hydraulically driven or separate engine driven generators are suited for these applications.

A.23.6.1.2 Where possible, the generator PTO system should be prevented from engaging if engine speed is above idle.

PTO gear ratios and engine governor components should be selected and matched to provide an engine speed high enough to maintain rated performance of the alternator and air conditioning system (if provided). Engine speed should be high enough to maintain rated performance of the low voltage electrical system. Continuous excessive engine speed will result in premature generator drivetrain component failure and unnecessary fuel consumption.

The purchaser should consider the specification of a means to automatically disconnect the generator or reduce engine speed to idle in the event of engine overspeed.

A.23.6.1.4 Operations in conjunction with a fire pump, aerial device, or other component driven off the fire apparatus's engine could require special or alternate interlock systems.

A.23.6.2.1 A hydraulic generator system generally consists of a variable displacement hydraulic pump deriving its power from the propulsion engine, a controller to regulate the hydraulic fluid flow rate, a hydraulic motor driving the generator, hydraulic fluid cooler, reservoir, and other miscellaneous parts.

All hydraulic generator systems have a window of operation (speed range). When selecting the power output of the hydraulic generator system, its speed range should be compared to the operating window of the fire apparatus's engine and the PTO ratios available. By selecting the hydraulic generator system and PTO ratio to match the application, electrical power can be provided over a wide operating range.

The selected PTO should have a gear ratio that will allow the widest possible range of engine speeds without overspeeding the hydraulic pump.

Where possible, engagement of the generator PTO system should be prevented if engine speed is above idle.

A.23.6.2.2 This means can be either a mechanical or hydraulic device.

A.23.6.2.5.3 The use of 90-degree fittings should be avoided.

A.23.6.2.5.4 Hose runs should not include "S" turns that would allow air to be trapped.

A.23.6.3 Engine-driven generator systems use an internal combustion engine close coupled to a generator. Some installations are capable of producing power while the apparatus is in motion. Generators used in these applications should be specifically designed for mobile applications. Remote generator controls in the driving compartment should be considered and specified if desired.

Copyright National Fire Protection Association
Provided by IHS under license with NFPA
No reproduction or networking permitted without license from IHS
Not for Resale

A.23.6.3.2 The purchaser should consider the following additional remote instruments where a prime mover, other than the propulsion engine, is used to drive a generator:

(1) Oil pressure gauge and low pressure indicator light and audible alarm
(2) Engine temperature gauge and high temperature indicator light and audible alarm

The purchaser might want to specify a high temperature indicator to help troubleshoot automatic shutdowns.

A.23.6.3.4.1 Emissions from exhaust discharge pipes should be directed away from any fire-fighting tools, because such emissions contain an oily substance that could make the tools difficult to handle and possibly dangerous to use.

A.23.6.4 Belt-driven generator systems use a voltage regulator and a generator driven off the propulsion engine. The complexity of modern engine drive belt configurations limits power output to about 6000 watts. This system will generally maintain acceptable voltage, but the frequency will vary with engine speed. Motor loads should not be powered by this type of power supply.

An alternative system uses a separately driven alternator to supply electrical energy to an inverter, which in turn produces line voltage electrical power. These systems are separate from, and do not affect, the performance of the low voltage electrical system. These systems are voltage regulated and provide ample power for scene lighting. Due to the belt-driven configuration, the system is still subject to low voltage at idle conditions, which could damage motors.

A.23.6.5.1 Brief descriptions of several different types of systems follow. All of these systems can overload the low voltage electrical system and cause the load management system to terminate the generation of line voltage. As a result, the amount of line voltage power that can be supplied at any given time is totally dependent on the other, higher priority demands placed on the low voltage system.

Dynamic Power Inverter. A dynamic power inverter converts alternator output power to 120 volts ac (or 120/240 volts ac). Power is electronically inverted to ac. Usually the largest system of this type is 7500 watts. Voltage and frequency control are typically very good.

Static Power Inverter. A static power inverter converts 12 volt to 14 volt dc power to 120 volt ac (or 120/240 volts ac) power. Power is electronically inverted to ac. Usually the largest system of this type is 2000 watts. Voltage and frequency control are typically very good.

Motor-Driven Generators. A motor-driven generator system converts 12 volt dc power to 120 volt ac (or 120/240 volts ac) power. The 12 volt dc motor drives an ac generator. Typical power ratings are less than 1600 watts. Voltage and frequency control are less precise than some of the other systems available. These types of systems are suited to providing electric power while the apparatus is in motion.

Transformers. Transformer systems convert energy from the alternator, which is then rectified to 120 volt dc power. Typical installations provide 1000 watts. Output voltage is directly dependent on input voltage. Input voltage is dependent on engine and alternator speed.

A.23.7 Portable generator systems are generally designed with an integral fuel tank and controls in one modular package. This allows the system to be picked up and transported to a remote location from the apparatus. Generators designed for portable use should be accessible for removal. These generators are generally not suited for "enclosed" compartment operation or should be mounted on a slide out tray for adequate ventilation. Such installations require interlocks or a high temperature alarm to ensure that the generator is operated in "slide out" condition.

The generator performance specifications should be evaluated carefully to ensure that the required level of performance can be met. Article 445, "Generators," of NFPA 70, *National Electrical Code*, requires that overcurrent protection be provided on portable generators.

A.23.8.1 The purchaser should specify the location on the apparatus for the power inlet. Consideration should be given to placement of the power inlet so that it disconnects if the apparatus is moved forward. The shoreline and circuit breaker in the fire station should be sized for the anticipated electrical load.

A.23.8.2.2 This paragraph differs from the requirements in NFPA 70, *National Electrical Code*, in that this standard does not permit two sources to be simultaneously connected together.

A.23.9.3 Where the wire could be exposed to temperatures above 194°F (90°C), higher temperature rated wire should be used.

A.23.11 Where the wire could be exposed to temperatures above 194°F (90°C), higher temperature rated wire should be used.

A.23.11.6.1 Locations in which flexible cord might be damaged include, but are not limited to, compartment walls and floors, exposed outside areas, and exposed interior areas near equipment or walkways.

A.23.12.3 Common connectors and terminations that comply with these requirements include the following:

(1) Welded or brazed connectors
(2) Crimped connectors
(3) Soldered connections that are mechanically secured before soldering
(4) Screw-type positive pressure connectors
(5) Ring terminals
(6) Hooks
(7) Upturned spade
(8) Crimped-on pins
(9) Other methods providing a positive mechanical and electrical connection that are acceptable to the authority having jurisdiction

A.23.12.4 The following switch terminology can be helpful in understanding the different types of switches.

One Pole (1P) or Single Pole (SP). A switch device that opens, closes, or changes connections in a single conductor of an electrical circuit.

Two Pole (2P) or Double Pole (DP). A switch device that opens, closes, or changes connections in both conductors of the same circuit.

Two Circuit (2 CIR). A switch device that opens, closes, or changes connections in a single conductor of two independent circuits.

Single Throw (ST). A switch that opens, closes, or completes a circuit at only one of the extreme positions of its actuator.

Double Throw (DT). A switch that opens, closes, or completes a circuit at both extreme positions of its actuator.

--`,,```,,,,````-`-`,,`,,`,`,,`---

Copyright National Fire Protection Association
Provided by IHS under license with NFPA
No reproduction or networking permitted without license from IHS
Not for Resale

Normally Open (NO). A switch in which one or more circuits are open when the switch actuator is at its normal or rest position.

Normally Closed (NC). A switch in which one or more circuits are closed when the switch actuator is at its normal or rest position.

Switches are rated for the type of load they are designed to control. Switch ratings include the following:

(1) Resistive
(2) Inductive
(3) Horsepower (i.e., motor loads)
(4) Tungsten (i.e., incandescent lamp loads)
(5) Alternating current
(6) Direct current

The ampere rating of a given switch is dependent on the type of load. In particular, switches used to control dc circuits should have the appropriate dc rating.

A.23.12.4.2 In lieu of a switch-rated circuit breaker, a standard circuit breaker could be used with a separate switching device.

A.23.12.5.1.1 The purchaser should specify the number and location of receptacles that are needed to operate the devices to be powered by the system. The purchaser should specify the NEMA number (if applicable), manufacturer, and style of the receptacles desired. For other than NEMA-type receptacles, the purchaser should additionally specify the wiring configuration.

A.23.12.5.1.3 If the offroad fire apparatus is to ford water, the receptacle distance should be increased above 30 in. (750 mm). The purchaser should review the proposed height for any receptacles on the apparatus and specify a higher mounting height if desired.

A.23.12.5.6 While NEMA configurations as defined in NEMA WD 6, *Wiring Devices — Dimensional Requirements*, are recommended to promote compatibility of equipment during mutual aid operations, other configurations are in use and have been adopted by various fire departments.

Acceptable NEMA-type plug and receptacle configurations for various ac voltage and current ratings are shown in Figure A.23.12.5.6.

A.23.13.4 A suggested minimum capacity of a reel is at least 100 ft (30 m) of cord rated to carry 20 amps at 120 volts ac. When sizing the reel, extra capacity should be provided when multiple receptacles are attached to the cord stored on the reel.

A cord reel to supply a single 120 volt circuit requires three collector rings and three conductors in the cord, for line, neutral, and ground. If the power source has 120/240 volt outputs, as most power sources do, a second equivalent circuit with the same rating requires only one additional conductor, because the neutral and ground can be common to both circuits. Thus, with approximately 25 percent more reel space and cord cost, the cord reel can supply twice the number of lights or other loads.

The letter "R" following the configuration number indicates a receptacle, and the letter "P" denotes a plug. For example, the nonlocking, 15-ampere, grounding receptacle found in most homes is configuration 5-15R and accepts a three-prong plug in the configuration of 5-15P.

Locking-type plugs and receptacles are designed to prevent accidental disconnection when subjected to moderate pull-apart loads. Neither locking nor nonlocking connectors are designed to withstand the loads that can be created when pulling long cords up buildings and stairs.

A.23.13.5 Table A.23.13.5 lists the suggested cord size for cord reels based on the desired circuit ampacity and the cord length. The ratings for 5 amps, 7.5 amps, and 10 amps should be used only where an appropriate load is permanently connected. Any cord reel with one or more outlets should be rated at 15 amps or greater.

For heavy loads such as large smoke fans and hydraulic rescue tool power plants, the purchaser should consider 240 volt units instead of 120 volt units. This will allow the use of smaller cords and reels. For example, a 150 ft reel to supply a hydraulic rescue tools (HRT) power plant that draws 15 amps at 240 volts would require 14 gauge wire. The same power unit in a version to run on 120 volts would draw 30 amps and would require 10 gauge wire.

Cord reels for three-phase power or other specialized applications should be designed with the assistance of a qualified electrical engineer.

Table A.23.13.5 Wire Size for Various Electrical Cord Lengths

	Wire Size (AWG) for Cord Length of					
Circuit Ampacity	**50 ft (15 m)**	**100 ft (30 m)**	**150 ft (45 m)**	**200 ft (60 m)**	**250 ft (75 m)**	**300 ft (90 m)**
5	16	16	16	16	16	14
7.5	16	16	16	16	16	14
10	16	16	16	16	14	14
15	14	14	14	14	12	12
20	12	12	12	12	12	10
25	12	12	12	12	10	10
30	10	10	10	10	10	10
35	8	8	8	8	8	8
40	8	8	8	8	8	8
50	6	6	6	6	6	6

A.23.13.6 The cord on the reel should be provided with a disconnect means within 18 in. (457 mm) from the reel for cord removal if the cord is 8 AWG or smaller.

A.23.13.7 The purchaser might want to color code the cord or cord reel to identify the voltage.

A.23.13.8.2 It might be advantageous to specify a remote power distribution box that has a provision for hanging the unit from a door or ladder.

A.23.13.8.3 Consideration should be given to the use of GFCI devices mounted in the remote power distribution box to provide additional protection to personnel using equipment powered through the box.

A.23.13.8.5 The lamps used in this application should be rough-service type. Scene lighting around the remote power distribution box can be provided with an integral, mechanically protected light fixture.

A.23.13.8.5.1 For increased visibility, reflective tape can be applied to the distribution box.

A.23.15.1 The purchaser should specify the type of rotation, telescopic, pan and tilt operations, and other features that are required.

Copyright National Fire Protection Association
Provided by IHS under license with NFPA
No reproduction or networking permitted without license from IHS
Not for Resale

Nonlocking plugs and receptacles

			15 Ampere		20 Ampere		30 Ampere		50 Ampere		60 Ampere	
			Receptacle	Plug	Receptacle	Plug	Receptacle	Plug	Receptacle	Plug	Receptacle	Plug
2-pole 3-wire grounding	5	125 V	5-15R	5-15P	5-20R	5-20P	5-30R	5-30P	5-50R	5-50P		
	6	250 V	6-15R	6-15P	6-20R	6-20P	6-30R	6-30P	6-50R	6-50P		
3-pole 4-wire grounding	14	125/ 250 V	14-15R	14-15P	14-20R	14-20P	14-30R	14-30P	14-50R	14-50P	14-60R	14-60P
	15	3 Ø 250 V	15-15R	15-15P	15-20R	15-20P	15-30R	15-30P	15-50R	15-50P	15-60R	15-60P

Locking plugs and receptacles

			15 Ampere		20 Ampere		30 Ampere		50 Ampere		60 Ampere	
			Receptacle	Plug	Receptacle	Plug	Receptacle	Plug	Receptacle	Plug	Receptacle	Plug
2-pole 3-wire grounding	5	125 V	L5-15R	L5-15P	L5-20R	L5-20P	L5-30R	L5-30P	L5-50R	L5-50P	L5-60R	L5-60P
	6	250 V	L6-15R	L6-15P	L6-20R	L6-20P	L6-30R	L6-30P	L6-50R	L6-50P	L6-60R	L6-60P
3-pole 4-wire grounding	14	125/ 250 V			L14-20R	L14-20P	L14-30R	L14-30P	L14-50R	L14-50P	L14-60R	L14-60P
	15	3 Ø 250 V			L15-20R	L15-20P	L15-30R	L15-30P	L15-50R	L15-50P	L15-60R	L15-60P
4-pole 5-wire grounding	21	3 Ø 208 Y 120 V			L21-20R	L21-20P	L21-30R	L21-30P	L21-50R	L21-50P	L21-60R	L21-60P

Reprinted from NEMA WD-6, *Wiring Devices — Dimensional Requirements*, 1988 edition, by permission of The National Electrical Manufacturers Association. Copyright 1989 by National Electrical Manufacturers Association.

FIGURE A.23.12.5.6 Common NEMA Plug Configurations.

Copyright National Fire Protection Association
Provided by IHS under license with NFPA
No reproduction or networking permitted without license from IHS
Not for Resale

A.23.15.2 When the light mast is mounted above the apparatus driving and crew compartment or the body, a brush and tree limb guard should be considered to protect the mast and floodlights.

A.23.15.2.3 To reduce the electrocution hazards associated with the operation of masts above the apparatus, the purchaser should consider specifying a slide-out operator's platform, a wireless remote control, or both.

A.23.15.2.8 The lighting assembly should be supported when it is in a transport mode, to prevent damage to lighting assembly from vibration.

A.23.16 The purchaser should consider the range of temperatures in which the power source is to be operated. If extreme conditions are anticipated, the purchaser should specify any specific test conditions that are desired.

A.23.16.2.4 Solid state equipment is generally hi-pot tested by the manufacturer. It is very important to connect all hot and neutral busses together so that no current flows through connected loads.

A.23.16.3 The fire department should check the polarity of the wiring in a building prior to interconnecting the fire apparatus–mounted electrical system to the electrical system in a building.

A.23.16.5 It is important that the power source meet the fire department requirements for output. Power sources of the size and type used on fire apparatus are generally advertised with power ratings for operating conditions that are more favorable than the conditions that may be encountered in fire apparatus use. Some power sources are advertised at peak output or intermittent duty ratings, and not the continuous duty output required for fire apparatus. The power source manufacturer and apparatus manufacturer might need to establish a reduced rating that is appropriate for fire apparatus. The standard calls for two steps. The power source manufacturer provides a declared rating for 120°F (49°C) air inlet temperature and 2000 ft (600 m) altitude for the minimum clearance and ventilation indicated on the declaration *(see 23.4.3 and A.23.4.3)*. Then the apparatus manufacturer verifies that the rating printed on the power source specification label can be attained during the apparatus test *(see 23.16.5)*.

Generator Set Rating. Auxiliary engine–powered generator sets are the type of power source most likely to require a reduction from advertised ratings, and generator set literature usually provides rating correction factors for altitude and temperature. These factors could be based on standards for engines such as ISO 3046-1, *Reciprocating internal combustion engines — Performance — Part 1: Declarations of power, fuel and lubricating oil consumptions, and test methods — Additional requirements for engines for general use*, and SAE J1349, *Engine Power Test Code-Spark Ignition and Compression Ignition-Net Power Rating*; standards for generators such as NEMA MG 1, *Motors and Generators*; or manufacturer testing. As an example of how altitude and temperature affect output capability, consider a typical 10 kW generator set with 0.8 generator efficiency and naturally aspirated diesel engine that is rated at 500 ft (150 m) and 85°F (30°C) for continuous operation without overload or reserve capacity. ISO 3046-1 indicates a factor of –2.1 percent output per 10°F (5.5°C) ambient increase, and a –2.6 percent per 1000 ft (300 m) altitude increase. Generator output is also affected by temperature [about –0.5 percent per 10°F (5.5°C)] and altitude (small and ignored in this example). There is also an effect from combining engine and generator into a generator set due to each heating the other. This may require an additional factor of –1 to –4+ percent per 10°F (5.5°C) depending on effectiveness of the cooling system and temperature (the factor increases with increasing temperature). Altogether, these factors suggest the 10 kW generator set in this example is capable of about 8.8 kW at the maximum temperature of 110°F (43°C) and altitude 2000 ft (600 m) specified in the standard. Another way to view this result is that an 11.4 kW generator set would be required to provide 10 kW at 110°F (43°C) and 2000 ft (600 m).

Apparatus Test. Where there is concern that installation or operational circumstances could cause power source intake air to heat above 110°F (5.5°C), or where the flow of cooling, induction, or exhaust air is more restricted than what is allowed by the manufacturer's literature, advance consultation with the power source manufacturer(s) could help in the selection of a power source that will pass the apparatus test with an output that meets the fire departments needs. Also, weather, like altitude, can affect air density and so can affect engine and generator set output. The combined effect of altitude and weather is reported as barometric pressure on local weather reports. Low barometric pressure will reduce engine and generator set output capability. High barometric pressure (usually clear cold days) will increase engine and generator set output capacity.

Other Power Source Types. Some output correction factors described in the generator set example apply to other types of power sources, depending on circumstances. For example, PTO and hydraulic driven generators also rely on engine power, but the engine will usually have substantial reserve power, so increased altitude or temperature will not affect their power supply rating. Regardless, best practice for longest life and lowest maintenance is to provide unrestricted air flow at the lowest temperature.

A.24.2 The command center could be an area of the crew compartment, the apparatus body, or a portion of either of these areas. The environment for the area is subject to wide variations in size, noise levels, facilities, and appointments. Command areas in enclosed body areas could be designed to accommodate several personnel. It is common to separate the crew or equipment areas from command areas. A separate entry and enclosed area might be required by the purchaser.

A.24.2.1 If a separately enclosed area is desired, the purchaser should specify the arrangements desired and whether a locking door is necessary.

A.24.2.2 The exact layout, design, and usage of the command area should be determined by each purchaser for each fire apparatus.

A.24.3 If such equipment is to be thermostatically controlled automatically, the purchaser should so state. Powered or nonpowered ventilation equipment should be provided as required by the purchaser.

A.24.4 Supplemental floor, wall, and ceiling acoustical material should be added where required to reduce noise levels below 80 dBA.

A.24.5.2 Command areas in the driving or crew compartments should be provided with 120 volt lighting systems to reduce 12 volt loads.

A.24.6.1 Removable Plexiglas or wired safety glass–type surfaces can be added to the top of work surfaces.

Copyright National Fire Protection Association
Provided by IHS under license with NFPA
No reproduction or networking permitted without license from IHS
Not for Resale

A.24.7.1 The seating equipment and arrangement can vary considerably. The equipment could include swing-down seats, stools, permanent chairs, or portable chairs, as required.

A.24.8 The enclosures for cabinets or storage areas could be roll-up-type doors, hinged doors, or sliding doors, with protective latches to hold the doors closed in transit. Synthetic netting could also be used in lieu of cabinet doors.

A.24.9.1 The interior surfaces should be bright and easily cleaned.

A.24.10.1 The purchaser needs to provide the manufacturer of the apparatus with all the details of the equipment that is to be installed in the communications area, regardless of who is to install the equipment, so that the area can be laid out properly and appropriate cabinets and consoles can be provided to house this equipment.

The purchaser should also specify the number, size, and type of conduits for wiring and antennas from the communications area to the driving compartment, power supply area, exterior surfaces, or secondary operational or control panels that are necessary to support the installation of equipment by persons other than the body manufacturer. These conduits should have a pull wire installed to pull future wiring into place.

A.24.11 Due to the cost of complying with the special power and installation requirements for most computer equipment, the use of office-type computers and peripherals in mobile applications is not cost effective. Consideration should be given to the use of laptop equipment. This equipment was designed to be transported and used in less-than-ideal environments. Laptop computers and printers can be powered from the vehicle's 12 volt dc power supply or from a 120 volt ac power supply. Laptops run off an internal battery that is rechargeable by one of these two power resources. The input power purity requirements are not that difficult to meet.

The purchaser should obtain technical assistance from the manufacturer of the computer equipment that is selected. The manufacturer's engineering staff can advise the purchaser and the builder both in the areas of initial installation and actual startup of the installed computer system.

A.25.2 The type of fire department air system and its size is determined by the number of SCBA units that will be used simultaneously, the number of SCBAs available, and the length of the event requiring the use of SCBA.

The number of users wearing SCBAs simultaneously should be considered under both peak demand and continuous demand. Peak demand is the maximum number of simultaneous SCBA users needed under the worst emergency conditions for which the fire department feels preparation is necessary. Continuous demand is the minimum number of simultaneous SCBA users necessary to maintain operations for a long-term duration.

To allow a specified number of SCBA users to be deployed without interruption, as many as three times that number of SCBA units should be available on the scene. That allows for backup personnel to have their equipment in readiness to immediately relieve those personnel who have exhausted their air supply as well as providing extra units in the event of failures or equipment problems.

The resupply rate of SCBA cylinders on the scene could be accomplished by an air compressor alone, air cascade alone, or a combination of each type of system with a booster system. The users should determine the supply rate and duration, then determine what system will meet this requirement.

An analysis of the existing fire department SCBAs and breathing air system should be performed to determine what needs, if any, exist. This analysis should include the following:

(1) SCBA units: type, quantity, designed duration
(2) Extra SCBA cylinders: type, quantity, designed duration
(3) Air storage system capability
(4) Air compressor capability

A.25.2.1 Special operating conditions such as high temperatures or cold weather operations might require special equipment modifications or design requirements by component manufacturers and body manufacturers. Fire departments need to be specific in stating their operating temperature range and special requirements. Because of high intake air flow with breathing air compressors, special provisions should be made for moisture separator freeze protection in very cold weather operations.

A.25.2.11.6 The purchaser might wish to require the air compressor assembler and final stage installer of the proposed air system to provide drawings of the air equipment arrangement, operator's panel layout, and air piping, to allow prepurchase evaluation of the operational characteristics of the system proposed.

A.25.2.13.1 If the apparatus is equipped with a breathing air system such as an air cascade system or air booster system, the purchaser might still wish to require the system manufacturer rather than just the contractor to provide on-site training on those systems. Expectations for training should be carefully defined in the purchase specifications.

A.25.2.13.2 Because of the extremely complicated nature of breathing air compressor systems, training is a critical component of the safe use of the system. Expectations for training should be carefully defined in the purchase specifications.

A.25.3 Selection of the type of drive for a compressor is one of the most important decisions that has to be made when choosing an air compressor. The compressor drive determines the cost of the compressor, installation requirements, type of operating controls and procedures, and frequency and cost of routine service and maintenance. The type of compressor drive also affects the cost of the fire apparatus when special generators, hydraulic systems, PTOs, or other provisions have to be made in order to power the compressor. The following compressor drives are available:

(1) Electric drive
(2) Hydraulic drive
(3) Gasoline or diesel drive
(4) PTO drive (direct drive)
(5) Dual drives

Dual drives, such as electric and hydraulic or electric and diesel, are sometimes advantageous so as to permit mobile operation using one drive and in-station operation using the electric motor. The ability to operate in-station with an electric motor prevents leaving a running vehicle outside in order to refill empty SCBA cylinders and air system storage vessels.

If filling is to be accomplished with both a compressor and a filled air storage system in a simultaneous operation, the amount of SCBA fills in the first 1 to 2 hours will increase considerably. The number of SCBA fills from the air storage system should be calculated and added to the air compressor fill rate. The total fills per hour would have to be an estimate, because the compressor could be refilling the air storage system during SCBA connection and disconnection.

If *only* an air compressor is to be used for refilling SCBA cylinders, the minimum size of the air compressor system needed can be determined based on the number of SCBA cylinders that need to be refilled per hour to meet incident demand requirements. Table A.25.3(a) and Table A.25.3(b) can assist in determining the compressor size.

Copyright National Fire Protection Association
Provided by IHS under license with NFPA
No reproduction or networking permitted without license from IHS
Not for Resale

Table A.25.3(a) Compressor Capacity Requirements (Free Air Delivery) (inch-pound units)

Desired SCBA Fills per Hour	SCBA Cylinder Rating				
	45 cf at 2216 psi	45 cf at 4500 psi	88 cf at 4500 psi	72 cf at 2250 psi	80 cf at 3000 psi
5	3.8	3.8	7.4	6.0	6.7
10	7.5	7.5	14.7	12.0	13.4
15	11.3	11.3	22.0	18.0	20.0
20	15.0	15.0	29.4	24.0	26.7
25	18.8	18.8	36.7	30.0	33.4
30	22.5	22.5	44.0	36.0	40.0
35	26.5	26.5	51.4	42.0	46.7
40	30.0	30.0	58.7	48.0	53.4
45	33.8	33.8	66.0	54.0	60.0
50	37.5	37.5	73.4	60.0	66.7
55	41.3	41.3	80.7	66.0	73.4
60	45.0	45.0	88.0	72.0	80.0
65	48.8	48.8	95.4	78.0	86.7
70	52.5	52.5	102.7	84.0	93.4
75	56.3	56.3	110.0	90.0	100.0
80	60.0	60.0	117.4	96.0	106.7
85	63.8	63.8	124.7	102.0	113.4
90	67.5	67.5	132.0	108.0	120.0
95	71.3	71.3	139.4	114.0	126.7
100	75.0	75.0	146.7	120.0	133.4

Note: Typically, a single fill station is limited to approximately 40 SCBA cylinder refills per hour (per operator), normally with two to four fill hose. An additional fill station should be added for each additional 40 SCBA cylinders that are to be filled per hour.

Table A.25.3(b) Compressor Capacity Requirements (Free Air Delivery) (metric units)

Desired SCBA Fills per Hour	SCBA Cylinder Rating				
	1275 L at 15,000 kPa	1275 L at 31,000 kPa	2500 L at 31,000 kPa	2000 L at 15,500 kPa	2250 L at 20,000 kPa
5	108	108	210	170	190
10	212	212	416	340	380
15	320	320	623	510	566
20	425	425	833	680	756
25	532	532	1040	850	946
30	637	637	1020	1020	1133
35	750	750	1190	1189	1323
40	850	850	1360	1359	1512
45	957	957	1529	1529	1699
50	1062	1062	2078	1699	1889
55	1170	1170	2285	1869	2078
60	1274	1274	2492	2039	2265
65	1382	1382	2701	2209	2455
70	1487	1487	2908	2379	2645
75	1594	1594	3115	2549	2832
80	1699	1699	3324	2718	3021
85	1807	1807	3531	2888	3211
90	1911	1911	3738	3058	3398
95	2019	2019	3947	3228	3588
100	2124	2124	4154	3398	3777

Note: Typically, a single fill station is limited to approximately 40 SCBA cylinder refills per hour (per operator), normally with two to four fill hose. An additional fill station should be added for each additional 40 SCBA cylinders that are to be filled per hour.

Copyright National Fire Protection Association
Provided by IHS under license with NFPA
No reproduction or networking permitted without license from IHS
Not for Resale

A.25.3.2.1 To reduce or prevent contaminated air from entering the compressor, consider the following:

(1) Park the fire apparatus as far from the scene as is practical and attempt to remain upwind from smoke or chemical fumes.
(2) Direct or extend fire apparatus and other engine exhaust outlets away from the point of compressor intake. Locate the air intake to the compressor as remotely as possible.

A.25.3.3.2 Special air flow engineering, supplement fans, additional doors, and vents might be required for the release of heated air from the air compressor during long periods of operation. These could include automatic operating doors in the roof of the apparatus, manually opened roof doors, large electric driven exhaust fans, and so forth. These extra provisions installed by the final stage installer could ensure there is adequate cooling to keep the air compressor within the compressor manufacturer's operating temperature range.

A.25.3.6.2 A final stage pressure gauge might also be desired at the air control panel, in addition to the gauge near the compressor. The hourmeter could be located at either the compressor or the main operator's panel. Interstage pressure gauges should be mounted at the compressor location. Oil gauge or level indicator should be located at the compressor, with alarms located at the main air operator's panel.

A.25.3.6.3 The purchaser should consider a shorepower connection to permit external electric power supply to the electric motor. If a shorepower connection is provided, it is important to have a transfer switch to allow the user to power the air compressor independently from either the onboard generator or shorepower.

Three-phase 240 volt electric motors with "soft starting" provisions are the most practical electric motors for air compressors. The fire station electrical supply should be checked for capacity and compatibility with the breathing air compressor. The generator should be sized to provide additional capacity for floodlight, emergency power applications, and other utility usage. A general guideline would be to specify a generator output with twice the capacity as required for the breathing air compressor.

The fire apparatus should be provided with a compatible shorepower cord and plugs, sized to match electric motor requirements. The shorepower cord shall also be sized to reflect distance from fire station service entrance to the fire apparatus shorepower receptacle.

A.25.4.1 The purchaser might require a quality of air other than that used for fire fighting. In those situations, it is important that the purchaser specify the standards that such air quality has to meet.

A.25.4.3.2 The purification system should be located where it is easily accessible for service, preferably on slide-out tracks or in a location where purifier cartridges and filter elements can be installed from the top. These units can be remote mounted from the air compressor and the operator's panel.

A.25.5 In some states in the United States, the regulations of the Occupational Safety and Health Administration (OSHA) of the Department of Labor have been interpreted to require that DOT cylinders be used for mobile systems to transport air on state highways. If DOT cylinders are not required by state regulations, ASME cylinders should be utilized if the design of the apparatus presents a severe difficulty to the removal of cylinders for testing.

A.25.6 Booster-type high pressure air compressors, used in conjunction with air tank storage arranged for air cascading, serve the purpose of extracting greater quantities of air from high pressure air storage systems. By adding a high pressure air booster/amplifier to the system, the yield can be increased by over 100 percent.

A.25.10 The size of the air supply piping, air compressor output, air hose size, and size of auxiliary storage reservoirs are of critical importance for supplying utility air-powered tools, confined-space breathing air, and high pressure air supplies to remote locations. The purchaser needs to specify the following information about the air reels that are to be installed on the apparatus so that the manufacturer can design an appropriate system:

(1) Source of air supply to the air reel
(2) Operating pressure range desired
(3) Type of air desired (low or high pressure, utility, or breathing air)
(4) Cubic foot (cubic meter) of air output or cubic foot (cubic meter) of air per minute required by air tools or equipment to be used and whether to be used alone or in combination
(5) Specific air tools, air bags, and other devices to be used from the air system

The use of chassis air brake systems for utility air tools is not recommended. Air brake system–supplied air outlets should be used only for nonemergency applications. Rescue air tools, air bags, or other emergency uses should not be supplied from air brake systems but from a high pressure cascade tank system or a high capacity utility air compressor especially designed for air tool usage. SCBA or SCUBA air cylinders are suitable for intermittent air supply with limited airflow requirements. Where used for this purpose, additional SCBA cylinders should be defined and segregated on the fire apparatus for such usage.

A.25.10.1 Generally, reels for use with air tools or air bags will be rated to a gauge pressure of 300 psi (2000 kPa), while reels for use with high pressure breathing-air cascade systems will be rated to a gauge pressure of 6000 psi (40,000 kPa).

To assist in differentiating air pressures on reels on the same apparatus or on multiple apparatus within the fire department, it is suggested the reels be painted distinctive colors. Suggested colors are as follows:

Blue: Reels for utility-air hose up to a gauge pressure of 300 psi (2000 kPa)

White: Reels for breathing-air hose up to a gauge pressure of 300 psi (2000 kPa)

Yellow: Reels for breathing-air hose from a gauge pressure of 301 psi to 3000 psi (2001 kPa to 20,000 kPa)

Red: Reels for breathing-air hose more than a gauge pressure of 3000 psi (20,000 kPa)

A.25.10.8.2 Typical mechanic's air tools consume between 35 ft^3/min and 90 ft^3/min (1 m^3/min and 2.5 m^3/min) of air. This rate of consumption is well beyond the capacity of most air compressors used to charge the chassis air brake system. For this reason, tools supplied from the chassis air system deplete the air supply quickly and will not operate for more than a few minutes. Air tools operated from a high capacity system, such as that used for breathing air, will operate much longer

Copyright National Fire Protection Association
Provided by IHS under license with NFPA
No reproduction or networking permitted without license from IHS
Not for Resale

before the source is depleted. Departments with specific tools and estimated operation durations should provide the manufacturer with the air capacity requirements of those tools and the expected duration, including to what extent that is an intermittent operation, so the manufacturer can provide the appropriate air source to meet those needs.

A.25.10.10 The intent of the low pressure breathing-air reel is to supply breathing air through up to 300 ft (90 m) of breathing-air hose at an operating gauge pressure of 125 psi (862 kPa) at the outlet point for connection to specific types of breathing apparatus. These arrangements provide for a longer operating duration in toxic or oxygen-deficient atmospheres.

A.25.11.1 The purchaser should evaluate conditions under which utility-air hose, high pressure air hose, or low pressure breathing-air hose could be used and advise the contractor if special hose is required.

A.25.11.3.1 The discharge end of any breathing-air hose could have various fittings, threads, or quick connections installed on the threaded end of the discharge hose. The purchaser needs to specify the particular hose termination, thread size, valve control, quick connection fitting, expected application of hose, and other pertinent information if the manufacturer is to provide appropriate connections.

A.25.11.5 Confined-space low pressure hose supplying multiple users or hose lengths greater than 300 feet (90 m) could require larger hose sizes.

A.25.12 Air supply for low pressure utility applications should be from dedicated air compressors or air cascade storage tanks.

A.25.12.1 The chassis air brake system is not intended to be used for rescue air bags, air tools, air reels, and other rescue applications, due to their limited duration, volume, and pressure.

A.25.12.2 The size of the air supply piping, chassis air compressor cubic feet per minute (liters per minute) rating, and auxiliary air reservoir(s) cubic foot (liter) capacity are of critical importance in supplying nonemergency application utility air outlets. These air outlets could be used to fill truck tires, pressurized water fire extinguishers, and so forth.

A.25.14 If the tests of some components of the apparatus are being certified by an independent third-party certification organization, the purchaser might wish to specify that these tests also be certified by the independent third-party certification organization.

A.26.1.1 Winches are classified by manufacturers for different applications and uses. The purchaser might wish to specify that winches meet requirements of SAE J706, *Rating of Winches*. Winches installed on fire apparatus are not designed nor suited for lifting or lowering personnel in rescue applications. Winches rated at under 20,000 lb_f (89 kN) on fire apparatus are not designed for removal of apparatus from "buried" off-road conditions. A heavy-duty wrecker should be used for towing and lifting of fire apparatus.

A.26.2 Most electric (12 volt or 24 volt dc) winches used for fire apparatus applications are rated at between 5000 lb_f (22.2 kN) and 12,000 lb_f (53.4 kN) line pull. Smaller winches of the removable type might be specified by the purchaser. Hydraulically driven winches are typically rated for 6000 lb_f to 30,000 lb_f (26.7 kN to 133.5 kN) line pull.

A.26.3.1.1 There is virtually no control over the speed of a single-speed electric winch. The winch runs at the speed the load dictates — faster with light loads and slower with heavy loads.

Two-speed electric winches provide only for preselection of the winch gear ratio — that is, one gear ratio for pulling heavy loads, a second for light loads — and are not designed for shifting under load to improve line speed.

A.26.4.5 A fast-idle switch should also be provided. The switch should be interlocked with the neutral position of the transmission to prevent accidental movement of the apparatus.

A.26.4.6.1 Completion of the engagement might require that the chassis transmission be shifted into the proper gear (split shaft PTOs only).

Annex B Specifying and Procuring Fire Apparatus

This annex is not a part of the requirements of this NFPA document but is included for informational purposes only.

B.1 General. The purchase of new fire apparatus involves a major investment and should be treated as such. Fire apparatus are complex mechanical equipment that should not be purchased in a haphazard manner. A purchase should be made only after a detailed study of the fire department's apparatus needs, taking into consideration other equipment the department owns or plans to buy.

The local fire chief and fire department staff know the conditions under which the apparatus will be used. However, competent advice should also be obtained from knowledgeable and informed sources such as other experienced fire service personnel, trade journals, training instructors, maintenance personnel, and fire equipment and component manufacturers. The fire insurance rating authority should also be consulted.

The study should look not only at current operations and risks to be protected but also at how these might change over the life of the fire apparatus.

B.2 Writing the Specifications. This standard provides the minimum technical requirements that new fire apparatus are expected to meet. It is recognized that many purchasers will want additional features of operation over and above these minimum requirements. The requirements in this standard, together with the annex material, should be studied carefully. Details, such as anywhere that the apparatus being specified needs to exceed the minimum requirements or where a specific arrangement is desired, should be carefully defined in the specifications for the apparatus. This might include special performance requirements, defining the number of seats and the seating arrangement for fire fighters riding on the apparatus, or providing space for extra hose or equipment the apparatus will be required to carry. Completion of the form shown in Figure B.2 should assist the purchaser in developing their specifications and provide the information required in the various sections of this document. The purchaser should fill in only sections where there are specific requirements over and above the standard. Care must be taken not to specify incompatible requirements, such as a 3000 gal (11,400 L) water tank, which weighs approximately 30,000 lb (13,600 kg), and a 10,000 lb (4500 kg) GVWR chassis. When more restrictive details are specified, fewer manufacturers will be able to bid, and the cost of the apparatus may be higher.

--`,,```,,,,````-`-`,,`,,`,`,,`---
Copyright National Fire Protection Association
Provided by IHS under license with NFPA
No reproduction or networking permitted without license from IHS
Not for Resale

APPARATUS PURCHASING SPECIFICATION FORM

Procurement Issues

*Date of bid opening: _____

*Purchaser's name and address: _____

_____

*Contact name and telephone number: _____

_____

*Sealed bid envelope information, address, and identification marking: _____

_____

_____

*The bidder is to honor the bid price for _____ days.

*If an interim inspection trip(s) to the assembly plant is to be provided, indicate:

number of trips _____ number of participants _____

who will pay expenses _____

How many service and operation manuals are to be provided? _____

*Where is the delivery of the apparatus to occur? _____

_____

_____

*Where and when is the acceptance to occur? _____

_____

_____

*The operation and service instruction and demonstration are to be conducted at _____

_____

for _____ persons for _____ days.

Specify the details of any special payment plan or schedule required: _____

_____

_____

Is an approval drawing required? ❑ Yes ❑ No

Is a bid bond required? ❑ Yes ❑ No

What percent of the bid price? _____

Is a performance bond required? ❑ Yes ❑ No

What percent of the bid price? _____

If an extended warranty on specific components is required, indicate which components and the length of the warranty:

_____

_____

_____

Is a warranty bond required? ❑ Yes ❑ No

In what amount? _____

***Required information**

© 2003 National Fire Protection Association

FIGURE B.2 A Sample Apparatus Purchasing Specification Form.

Copyright National Fire Protection Association
Provided by IHS under license with NFPA
No reproduction or networking permitted without license from IHS
Not for Resale

General Requirements — Chapter 4

Special design features required on this apparatus: _____

_____

_____

_____

_____

What are the maximum allowable dimensions of the apparatus?

Overall height in inches (millimeters): _____ (measured at the highest projection)

Overall length in inches (millimeters): _____ (measured at the front and rearmost projections)

Wheelbase in inches (millimeters): _____ (measured from the center of the front axle to the center of the rear axle)

Width in inches (millimeters): _____ (measured at the outside of the mirrors)

Gross vehicle weight in pounds (kilograms): _____

Maximum weight on the front axle in pounds (kilograms): _____

Maximum weight on the rear axle in pounds (kilograms): _____

What is the maximum wall-to-wall turning radius allowable? _____ ft (m)

*Maximum elevation at which the apparatus will operate if over 2000 ft (600 m): _____

_____

*Maximum grade that apparatus will climb if over 6 percent: _____

_____

*Specify the minimum ambient air temperature in which the apparatus is to operate: _____ °F (°C)

*Specify the maximum ambient air temperature in which the apparatus is to operate: _____ °F (°C)

Specify the apparatus road performance if it is to exceed the minimum specified in this standard: _____

_____

_____

_____

*Specify the maximum road speed required: _____

*__Hose Thread Size Information__

TPI × OD or size and type (e.g., 2½ in. NH or 4 in. storz)	
1 in. =	1½ in. =
2 in. =	2½ in. =
3 in. =	3½ in. =
4 in. =	4½ in. =
5 in. =	6 in. =
Hydrant =	

*__Required information__

© 2003 National Fire Protection Association

FIGURE B.2 *Continued*

Copyright National Fire Protection Association
Provided by IHS under license with NFPA
No reproduction or networking permitted without license from IHS
Not for Resale

Testing and Acceptance

If independent certification of tests is required for the pump system, aerial device, line voltage power source, or other systems, what independent testing organization is to certify the tests? _____

Is anyone to witness the manufacturer's predelivery tests? _____

Where are the road tests to be conducted? _____

* What tests will the contractor be required to perform on delivery? _____

Apparatus Type — Chapters 5 through 11

* This apparatus is to be used as a(n):

- ❑ Pumper (*see Chapter 5*)
- ❑ Initial attack apparatus (*see Chapter 6*)
- ❑ Mobile water supply apparatus (*see Chapter 7*)
- ❑ Aerial fire apparatus (*see Chapter 8*)
- ❑ Quint fire apparatus (*see Chapter 9*)
- ❑ Special service apparatus (*see Chapter 10*)
- ❑ Mobile foam fire apparatus (*see Chapter 11*)
- ❑ Other

* What functions or services is this apparatus to perform? _____

* Specify the maximum number of persons to ride on the apparatus: _____

* **Suction Hose** (*See 5.7.2, 6.6.2, 7.6, 9.7.2, 10.4.2, and 11.8.1.*)

* Is suction hose required? ❑ Yes ❑ No

  * Soft or hard: _____
  * Size and length: _____
  * Connection type and size: _____

Mounting arrangement, bracket style, and location: _____

* **Required information**

© 2003 National Fire Protection Association

FIGURE B.2 *Continued*

Copyright National Fire Protection Association
Provided by IHS under license with NFPA
No reproduction or networking permitted without license from IHS Not for Resale

* **Ground Ladders to Be Carried** *(See 5.7.1, 6.6.1, Section 8.7, 9.7.1, and 10.4.1.)*

Number	Length	Type	Mounting Location and Bracket Type

Indicate if a specific type or make of ladder is desired: _____

* **Breathing Apparatus**

Quantity	Make/Model	Mounting Location

* The breathing apparatus is to be supplied by the ❑ contractor ❑ purchaser.

Special requirements for the breathing apparatus or its mounting, including diameters of SCBA cylinders to be utilized: _____

* **Equipment Carried on Apparatus** (*See Sections 5.8, 6.8, 7.7, 8.8, 9.8, 10.5, and 11.9.*)

* Miscellaneous equipment allowance if it exceeds the standard's minimum weight: _____

* Attach a list of equipment and tools to be supplied by the contractor with the apparatus, stating the item, quantity, where it is to be mounted or carried, the weight of each item, and its dimensions (L × W × D).

* Attach a list of equipment and tools to be supplied by the fire department to be carried on the apparatus, stating the item, quantity, where it is to be mounted or carried, contractor's responsibility for mounting, the weight of each item, and its dimensions (L × W × D).

* Attach a list of equipment and tools that might be carried on the apparatus in the future, stating the item, quantity, the desired mounting location or compartment where it is likely to be carried, the weight of each item, and its dimensions (L × W × D).

* Attach a list of fixed and permanent components required on the apparatus, showing the item, quantity, weight of each, and dimensions (L × W × H), as well as the location where it is to be carried.

If additional compartment space is required in addition to what is necessary to store the equipment on the attached four lists, indicate space requirements. _____

* **Required information**

© 2003 National Fire Protection Association

FIGURE B.2 ***Continued***

Copyright National Fire Protection Association
Provided by IHS under license with NFPA
No reproduction or networking permitted without license from IHS
Not for Resale

Chassis and Vehicle Components — Chapter 12

Desired chassis make and model or style: _____

_____

_____

Specify the desired location of the engine: _____

Type of propulsion engine: _____

Is an electric fuel pump or repriming pump required? ❑ Yes ❑ No

Specify any special lubrication system requirements: _____

_____

Specify any special cooling system requirements: _____

_____

Is a manual emergency engine shutdown required? ❑ Yes ❑ No

Type of fuel filters required: _____

_____

Type of air filters required: _____

_____

Enhanced performance ember separator requirements: _____

_____

Specify the exiting location of the exhaust system: _____

Specify the type of brake system required: _____

_____

Is an auxiliary brake system required? ❑ Yes ❑ No

Specify the type and control: _____

Specify the style and type of tires required: _____

_____

Indicate whether cast spoke, hub piloted, stud piloted, steel disc, or aluminum wheels are required: _____

_____

Are rear fender liners required? ❑ Yes ❑ No

Are automatic tire chains required? ❑ Yes ❑ No

Should the apparatus be designed to operate "off paved roads?" ❑ Yes ❑ No

Specify if an increased underbody clearance is required: _____

_____

Specify if a greater angle of approach is required: _____

Specify if a greater angle of departure is required: _____

Specify the steering system cramp angle if it exceeds the standard's minimum: _____

_____

Specify if a drive axle traction control or no-spin differential is required: _____

_____

Specify if rear wheel steering is required: _____

Specify if a special suspension system is required: _____

* **Required information**

© 2003 National Fire Protection Association

FIGURE B.2 ***Continued***

Copyright National Fire Protection Association
Provided by IHS under license with NFPA
No reproduction or networking permitted without license from IHS
Not for Resale

Is an automatic or manual transmission required? _____

_____

Specify the fuel tank capacity required: _____ gal (L)

Must tow hooks be accessible without opening compartment doors? ❑ Yes ❑ No

Special cab trim features: _____

_____

_____

_____

Low-Voltage Electrical Systems and Warning Devices — Chapter 13

* Indicate whether a battery charger, conditioner, or a polarized receptacle is to be provided (*see 13.4.5*): _____

_____

If a built-in battery charger or conditioner is provided, indicate the required charging rate: _____

_____

Specify the location of the receptacle for the battery charger or conditioner: _____

_____

Is a second "battery on" pilot light on the outside of the vehicle required? ❑ Yes ❑ No

Where? _____

Specify any electrical loads beyond those defined in the standard that are to be part of the minimum continuous electrical load: _____

_____

If a load management system is required, specify the sequence of control (shutdown): _____

_____

_____

Warning Light Information

Location	Make and Model	Color
Upper level, forward facing		
Upper level, side-facing, front		
Upper level, side-facing, midship		
Upper level, side-facing, rear		
Upper level, rear facing		
Lower level, forward facing		
Lower level, side-facing, front		
Lower level, side-facing, midship		
Lower level, side-facing, rear		
Lower level, rear facing		

Specify the make, model, location, and controls of the siren: _____

_____

* **Required information**

© 2003 National Fire Protection Association NFPA 1901 (p. 6 of 21)

FIGURE B.2 *Continued*

--`,,```,,,,````-`-`,,`,,`,`,,`---

Copyright National Fire Protection Association
Provided by IHS under license with NFPA
No reproduction or networking permitted without license from IHS
Not for Resale

Are air horns required? ❑ Yes ❑ No If yes, specify the make preferred, type of control, and their location: ____

Specify any special emergency lighting or warning features or equipment that is required: ____

Are cab hand lights or mounted adjustable spotlights required? ❑ Yes ❑ No

Specify if additional work lighting is required: ____

Specify if additional driving or crew compartment lighting is required: ____

Are provisions needed for rechargeable equipment? ❑ Yes ❑ No

If yes, make and model of equipment: ____

Is a backup camera system required? ❑ Yes ❑ No

If yes, make and model: ____

Driving and Crew Areas — Chapter 14

Specify any special seating requirements or arrangements for the driver: ____

Specify any special seating requirements or arrangements for the officer: ____

Specify any special seating requirements or arrangements for the crew: ____

Is an intercom system required? ❑ Yes ❑ No

Make, model, or type: ____

Locations: ____

Radio interface: ____

Special requirements: ____

Specify any special requirements for carrying tools or equipment within the driving or crew compartment: ____

Specify any special requirements for carrying EMS equipment within the driving or crew compartment: ____

Specify any special step or handrail arrangements required: ____

* **Required information**

© 2003 National Fire Protection Association NFPA 1901 (p. 7 of 21)

FIGURE B.2 ***Continued***

Copyright National Fire Protection Association
Provided by IHS under license with NFPA
No reproduction or networking permitted without license from IHS Not for Resale

If a tiller-steered apparatus is to be provided, specify the type of communication system required between the tiller operator and the apparatus driver: _____

_____

Is a tilt or telescoping steering column required? _____

Specify any extra driving compartment instrument panel features required: _____

_____

Specify the type and style of driving compartment mirrors: _____

_____

Body, Compartments, and Equipment Mounting — Chapter 15

Body material: _____

_____

Compartment capacity required: _____ ft^3 (m^3)

Specify any special compartment features and finish required: _____

_____

_____

_____

Specify if a special compartment floor material or covering is required: _____

_____

_____

Specify the type and style of compartment doors required: _____

_____

_____

Specify the style of door latches, locks, or stays required: _____

_____

_____

Specify the type of compartment lighting required: _____

_____

_____

Radio equipment to be used:

Is the manufacturer to provide the radio? ❑ Yes ❑ No

Is the manufacturer to install the radio? ❑ Yes ❑ No

Make and model: _____

Mounting location for radio: _____

Mounting location for control(s) and speaker(s): _____

_____

Provisions required for computer equipment or electronics: _____

_____

_____

Type of body tread plate material required: _____

_____

* **Required information**

© 2003 National Fire Protection Association

FIGURE B.2 *Continued*

Copyright National Fire Protection Association
Provided by IHS under license with NFPA
No reproduction or networking permitted without license from IHS
Not for Resale

Type of step and platform material required: _____

_____

* Color of apparatus: _____

Paint number and manufacturer, if known: _____

Striping, decoration, and lettering required: _____

_____

_____

List any areas not to be painted: _____

_____

_____

Miscellaneous body trim: _____

_____

_____

Is rustproof treatment required? ❑ Yes ❑ No Provide details of locations to be treated: _____

_____

_____

* **Hose to Be Carried for Preconnected Lines** (*See Sections 5.6, 6.5, 7.5, 8.6, 9.6, and 10.7.*)

Length	Size	Location	Bed or Reel

* **Hose to Be Carried in Hose Bed or on Reels** (*See Sections 5.6, 6.5, 7.5, 8.6, 9.6, and 10.7.*)

Length	Size	Location	Bed or Reel

If a hose bed cover(s) is desired, specify type: _____

_____

Is the fire-fighting system to be a slip-on unit? ❑ Yes ❑ No

Specify the lifting arrangement required: _____

_____

Specify the anchoring system required: _____

_____

* **Required information**

© 2003 National Fire Protection Association

FIGURE B.2 ***Continued***

Copyright National Fire Protection Association
Provided by IHS under license with NFPA
No reproduction or networking permitted without license from IHS
Not for Resale

Fire Pump — Chapter 16
Industrial Supply Pump — Chapter 18

* Is a fire pump required? ❑ Yes ❑ No
* Is an industrial supply pump required? ❑ Yes ❑ No
* Pump rated capacity: _____ gpm (L/min)
* Number of pump stages required: _____
Pump type: _____
Pump location: _____
How is the pump to be driven? _____
Type of engine to drive pump if other than the chassis propulsion engine: _____
_____
Pump testing authority: _____
_____
If pump-and-roll is required, specify:
Flow _____ gpm (L/min) at _____ psi (kPa)
Vehicle speed _____ mph (kmph)
Type of primer system: _____
_____
Special pump performance requirements:
If altitude over 2000 ft (600 m), specify altitude: _____
If lift over 10 ft (3 m), specify lift: _____
If through more than 20 ft (6 m) of suction hose, specify length: _____
Do local water conditions require special materials for pump construction and piping? _____
_____
_____
Location of pump operator's panel: _____
Pump panel and gauge panel material: _____
Type of intake and discharge valve controls desired: _____
_____
Specify the size of the master gauges: _____
_____
Are individual line pressure gauges required? ❑ Yes ❑ No
If yes, are there any special requirements? _____
_____
Are individual line flow meters required? ❑ Yes ❑ No
If yes, are there any special requirements? _____
_____
Are any special gauges, instruments, or other features required at the pump operator's panel? _____
_____
Are special pump and piping features required to deal with extremely low temperatures? _____
_____

* **Required information where equipment/system to be provided**

© 2003 National Fire Protection Association

FIGURE B.2 *Continued*

Copyright National Fire Protection Association
Provided by IHS under license with NFPA
No reproduction or networking permitted without license from IHS
Not for Resale

Is the intake relief system to be adjustable at the panel? ❑ Yes ❑ No

If no, where: _____

Is a pump pressure governor or a relief valve to be supplied? _____

* **Pump Intake Connections**

Size	Type of Connection	Location	Valved (Y/N)

Are special adapters required on the pump intakes? _____

* Will a valve, siamese, or adapter be carried on any intakes? ❑ Yes ❑ No

If yes, specify where, make, and model (*see 16.6.11, 18.6.11*): _____

* **Pump Discharge Outlets Without Preconnected Hose Lines**

List the 2½ in. (65 mm) or larger discharge outlets required:

Quantity	Size	Type of Connection	Location	Flow Requirement

* **Pump Discharge Outlets for Preconnected Hose Lines**

Quantity	Size	Type of Connection	Location	Flow Requirement

* **Required information where equipment/system to be provided**

© 2003 National Fire Protection Association

FIGURE B.2 *Continued*

Copyright National Fire Protection Association
Provided by IHS under license with NFPA
No reproduction or networking permitted without license from IHS
Not for Resale

Is a deck gun required? ❑ Yes ❑ No

Type: _____

Mounting location: _____

Piping size and arrangement: _____

Is pump panel color coding required? ❑ Yes ❑ No

Specify details: _____

_____

_____

Is a booster reel required? ❑ Yes ❑ No

How many reels? _____

Location: _____

Hose size and length: _____

Reel rewind type: _____

Piping to reel: _____

Auxiliary Pump — Chapter 17

* Is an auxiliary pump required? ❑ Yes ❑ No

Type of auxiliary pump operations: _____

_____

Auxiliary pump performance: _____

_____

Type of auxiliary pump: _____

_____

How is the auxiliary pump to be driven? _____

_____

Auxiliary pump location: _____

_____

Is the auxiliary pump to be connected to the fire pump? ❑ Yes ❑ No

Do local water conditions require special materials for pump construction and piping? _____

_____

* Auxiliary Pump Intake Connections

Size	Type of Connection	Location	Valved (Y/N)

* **Required information where equipment/system to be provided**

© 2003 National Fire Protection Association

FIGURE B.2 *Continued*

Copyright National Fire Protection Association
Provided by IHS under license with NFPA
No reproduction or networking permitted without license from IHS
Not for Resale

* **Auxiliary Pump Discharge Outlet Connections**

Quantity	Size	Type of Connection	Location	Flow Requirement

Where are the auxiliary pump controls to be located? _____

_____

Is a booster reel required? ❑ Yes ❑ No

How many reels? _____

Location: _____

Hose size and length: _____

Reel rewind type: _____

Piping to reel: _____

Water Tank — Chapter 19

* Is a water tank required? ❑ Yes ❑ No

* Water tank capacity (*see Sections 5.4, 6.3, 7.3, 8.4, and 9.4*): _____

Tank construction material: _____

_____

Is an internal coating required? ❑ Yes ❑ No

Is a removable tank lid required? ❑ Yes ❑ No

Type of tank level indicator(s): _____

Location of additional tank level indicator(s): _____

_____

Tank to pump flow rate required: _____

Pump to tank fill rate required: _____

Is a tank dump valve required? ❑ Yes ❑ No

Style of valve: _____

Size: _____

Performance required: _____

Location: _____

Type of connector: _____

Is a direct tank fill required? ❑ Yes ❑ No

Style of valve: _____

Size: _____

Performance required: _____

Location: _____

Type of connector: _____

* **Required information where equipment/system to be provided**

© 2003 National Fire Protection Association

FIGURE B.2 *Continued*

--`,,```,,,,````-`-`,,`,,`,`,,`---

Copyright National Fire Protection Association
Provided by IHS under license with NFPA
No reproduction or networking permitted without license from IHS Not for Resale

Aerial Devices — Chapter 20

* Is an aerial device required? ❑ Yes ❑ No

* Indicate whether the aerial device is to be an aerial ladder, elevating platform, or water tower: _____

_____

_____

Indicate maximum slope for aerial device operation if it exceeds 5 degrees (8.7 percent): _____

Communication system type, locations, radio interface, head set connections: _____

_____

_____

Aerial Ladder

* Rated vertical height required: _____ ft (m)

* Rated horizontal reach required: _____ ft (m)

* Capacity rating (tip load) required: _____ lb [250 lb (114 kg) minimum]

Is a breathing air system to be supplied to the operator's position? ❑ Yes ❑ No

Is a breathing air system to be supplied to the tip of the ladder? ❑ Yes ❑ No

If a breathing air system is to be supplied, are there any special requirements, makes, or models for the components of the breathing air system desired? _____

_____

_____

_____

Location of any secondary speaker/microphone required on the aerial ladder: _____

_____

Is a prepiped waterway required? ❑ Yes ❑ No

If yes, to what ladder section is the pipe to be extended? _____

_____

Should the prepiped waterway be pinnable to multiple sections? ❑ Yes ❑ No

What make and model of monitor are required [minimum flow 1000 gpm (4000 L/min) at 100 psi (700 kPa)]? _____

_____

If the monitor is power operated, are additional sets of controls beyond those required at the ladder operator's position required? ❑ Yes ❑ No

If yes, describe arrangement and location: _____

_____

What make and model of nozzle are required? _____

_____

Indicate the external inlet arrangement desired, including size, type, and number of inlets and valving arrangement: _____

_____

Is a hose connection required at the ladder tip? ❑ Yes ❑ No

If yes, describe size and arrangement: _____

_____

* **Required information where equipment/system to be provided**

© 2003 National Fire Protection Association

FIGURE B.2 *Continued*

--`,,```,,,,````-`-`,,`,,`,`,,`---

Copyright National Fire Protection Association
Provided by IHS under license with NFPA
No reproduction or networking permitted without license from IHS

Not for Resale

Is a three-lever, two-lever, or single-lever control system required? _____

_____

List any aerial ladder equipment or features required: _____

_____

_____

_____

_____

_____

Elevating Platform

* Rated vertical height required: _____ ft (m)

* Rated horizontal reach required: _____ ft (m)

* Capacity rating (tip load) required: _____ lb (kg) [750 lb (340 kg) minimum]

Is the elevating platform to be equipped with a ladder that provides continuous access between the platform and the turntable? ❑ Yes ❑ No

If yes, specify details: _____

_____

_____

Is a breathing air system to be supplied to the platform? ❑ Yes ❑ No

Is a breathing air system to be supplied to the lower control station? ❑ Yes ❑ No

If a breathing air system is to be supplied, are there any special requirements, makes, or models for the components of the breathing air system desired? _____

_____

_____

_____

Specify the number of monitors to be supplied on the platform: _____

What make and model of monitor are required [minimum flow 1000 gpm (4000 L/min) at 100 psi (700 kPa)]? _____

_____

What make and model of nozzle are required? _____

_____

Is a hose connection to be provided on the platform from the water delivery system? ❑ Yes ❑ No

If yes, describe number, size, and arrangement: _____

_____

Are any special arrangements to be provided for hose lines from the platform water delivery system? _____

_____

Indicate the external inlet arrangement required, including the size, type, and number of inlets and the valving arrangement: _____

_____

_____

Is a three-lever, two-lever, or single-lever control system required? _____

_____

* **Required information where equipment/system to be provided**

© 2003 National Fire Protection Association

FIGURE B.2 ***Continued***

--`,,```,,,,````-`-`,,`,,`,`,,`---

Copyright National Fire Protection Association
Provided by IHS under license with NFPA
No reproduction or networking permitted without license from IHS Not for Resale

Low Voltage Lighting Requirement

Quantity	Spot/Flood	Location	Specify Details

Line Voltage Lighting Requirement

Quantity	Spot/Flood	Wattage	Location	Specify Details

List any elevating platform equipment or features required: _____

Water Tower

* Is the water tower to be telescoping, articulating, or both? _____

* Rated vertical height required: _____ ft (m)

* Rated horizontal reach required: _____ ft (m)

Waterway capacity required if in excess of 1000 gpm (4000 L/min): _____

What make and model of monitor are required [must flow at least 1000 gpm (4000 L/min) at 100 psi (700 kPa)]?

What make and model of nozzle are required? _____

Where are the monitor and nozzle controls to be located? _____

Indicate the external inlet arrangement desired, including the size, type, and number of inlets and the valving arrangement: _____

Is a three-lever, two-lever, or single-lever control system required? _____

* **Required information where equipment/system to be provided**

© 2003 National Fire Protection Association NFPA 1901 (p. 16 of 21)

FIGURE B.2 *Continued*

Copyright National Fire Protection Association
Provided by IHS under license with NFPA
No reproduction or networking permitted without license from IHS
Not for Resale

List any water tower equipment or features required: _____

_____

_____

_____

_____

Foam System — Chapter 21

* Is a foam system required? ❑ Yes ❑ No

* Type of foam system required: _____

_____

* Type of foam(s) to be used: _____

_____

* Foam concentrate storage capacity: _____ gal (L)

* **Discharge Outlets to Be Used with Foam and Their Performance**

Discharge Location	Required Flow	Proportioning Rate	Hose Length	Hose Diameter

* Is an outside foam system inlet or pickup required? ❑ Yes ❑ No

Type: _____

Is a foam tank refill system required? ❑ Yes ❑ No

If yes, performance requirements: _____

_____

Compressed Air Foam System — Chapter 22

* Is a CAFS required? ❑ Yes ❑ No

* What is the total SCFM required? _____

What type of compressor and driver is required? _____

_____

What is the total water pump capacity required? _____

_____

Specify the type of system controls and interlocks required: _____

_____

_____

* **Required information where equipment/system to be provided**

© 2003 National Fire Protection Association

FIGURE B.2 *Continued*

Copyright National Fire Protection Association
Provided by IHS under license with NFPA
No reproduction or networking permitted without license from IHS Not for Resale

* **Discharge Outlets to Be Used with the CAFS and Their Performance**

Discharge Location	Required Flow	Hose Length	Hose Diameter

Specify if an airflow meter is required (SCFM): _____

Specify the type of wet/dry control required: _____

Line Voltage Electrical System — Chapter 23

* Is a line voltage electrical system required? ❑ Yes ❑ No

* Amperage of power source: _____

* Voltage of power source: _____

* Type of power source:

- ❑ Portable generator
- ❑ Hydraulically driven generator
- ❑ Direct drive generator
- ❑ Auxiliary engine driven generator
- ❑ Belt driven generator or alternator
- ❑ Derived from apparatus low voltage power supply system
- ❑ Other: _____

Make, model, or other details of power source: _____

Location of power source: _____

Mounting of power source: _____

Panelboard location: _____

* **Required information where equipment/system to be provided**

© 2003 National Fire Protection Association

FIGURE B.2 *Continued*

Copyright National Fire Protection Association
Provided by IHS under license with NFPA
No reproduction or networking permitted without license from IHS
Not for Resale

* **Receptacle Information**

Quantity	Amps/Volts	Style of Receptacle	Location

* **Circuit Remote Control Information**

Controlled Circuit	Switch Location

* **120/240 Volt Lighting Information**

Style/Make	Location	Wattage/Bulb	Type Mounting

* **Cord Reel Information**

	Reel #	Reel #	Reel #	Reel #
Mounting location				
Amperage				
Voltage				
Length of cord in feet				
Receptacle style				
Distribution box				
Rewind system				

* Is a power-operated light mast required? ❑ Yes ❑ No

If yes, specify the make and model required: _____

List any equipment to be powered from a shorepower inlet: _____

* **Required information where equipment/system to be provided**

© 2003 National Fire Protection Association

FIGURE B.2 *Continued*

Copyright National Fire Protection Association
Provided by IHS under license with NFPA
No reproduction or networking permitted without license from IHS
Not for Resale

Command and Communications — Chapter 24

* Is a separate command area required? ❑ Yes ❑ No

* Is the area to be enclosed by walls and doors? _____

_____

* Size of the area: _____ ft (m) × _____ ft (m) or _____ ft^2 (m^2)

* Number of persons to be seated and able to work in the area: _____

Is special lighting required? ❑ Yes ❑ No

Describe _____

_____

List the make and model for each piece of communication equipment to be in the command and communications area and whether the contractor or the purchaser is to provide and install the equipment: _____

_____

_____

_____

_____

List the make and model for each piece of computer equipment to be in the command and communications area and whether the contractor or the purchaser is to provide and install the equipment: _____

_____

_____

_____

_____

List the make and model for each other piece of equipment to be in the command and communications area and whether the contractor or the purchaser is to provide and install the equipment: _____

_____

_____

_____

_____

* Is external video equipment to be used on the apparatus? ❑ Yes ❑ No

* If yes, where is it to be mounted? _____

_____

_____

Air Systems — Chapter 25

* Is an air system required? ❑ Yes ❑ No

* What is the function of the air system?

- ❑ Refill SCBA cylinders
- ❑ Supply remote breathing air
- ❑ Supply high pressure breathing air hose
- ❑ Supply utility air

* **Required information where equipment/system to be provided**

© 2003 National Fire Protection Association

FIGURE B.2 *Continued*

Copyright National Fire Protection Association
Provided by IHS under license with NFPA
No reproduction or networking permitted without license from IHS
Not for Resale

* Is a cascade system to be supplied? ❑ Yes ❑ No
  * How many SCBA cylinders are to be filled? _____
  * What is the size of the cylinders to be filled? _____ ft^3 (m^3)
  * To what pressure are the cylinders to be filled? _____ psi (kPa)
* Is a compressor required? ❑ Yes ❑ No
  * If yes, what free air delivery (FAD) rating is required? _____ ft^3 (m^3) at _____ psi (kPa)
* Is a SCBA refill station required? ❑ Yes ❑ No

If yes, what is the location of the refill station? _____

_____

Number of refill lines: _____

Air Hose Requirements

* For each air hose required, specify the following:
  (a) Discharge flow required in CFM
  (b) Discharge pressure required in psi
  (c) Whether breathing air or utility air is to be supplied
  (d) Length of hose in feet
  (e) Whether hose is to be stored on a reel
  (f) Mounting location of reel, if applicable
  (g) Fitting or device at the end of the hose

Winches — Chapter 26

* Is a winch required? ❑ Yes ❑ No
* What is the single line pull rating required? _____

What is the wire rope length required? _____

Is the power source for the winch to be electric or hydraulic? _____

_____

Specify the winch location: _____

_____

_____

Type of control required: _____

_____

Location of control: _____

_____

* **Required information where equipment/system to be provided**

© 2003 National Fire Protection Association

FIGURE B.2 ***Continued***

--`,,```,,,,````-`-`,,`,,`,`,,`---

Copyright National Fire Protection Association
Provided by IHS under license with NFPA
No reproduction or networking permitted without license from IHS Not for Resale

B.2.1 The first consideration in the design of a fire apparatus is a definition of the mission of the apparatus. The purchaser should define the basic specifications as follows:

(1) The type of apparatus to be purchased (pumper, aerial, initial attack, other)
(2) Types of responses (structure fires, wildland fires, automobile accidents, suburban environment, downtown city, medical assistance, rural water supply, etc.)
(3) The response environment (old city downtown with narrow streets and alleys, suburban neighborhoods, garden apartments, rural roads, major expressways, responses of hundreds of miles, etc.)
(4) Crew size (number of seats)
(5) Size of pump, if any
(6) Size of tank(s), if any
(7) Aerial device type and length, if any
(8) Hose load, if any
(9) EMS capability, if any
(10) Commercial or custom chassis
(11) Chassis configuration (conventional, cab over, cab forward, rear engine)
(12) Size or weight limitations due to firehouse, roads, bridges, terrain, neighborhoods
(13) Budget considerations
(14) Expected service life (years) and duty cycle (runs per day or month)

B.2.2 The second consideration in the design of a fire apparatus is the fixed equipment components. These major "support function" components can represent the most concentrated and heaviest load elements of the vehicle. It is vital that these elements be laid out early in the initial designs and be situated on the vehicle to provide for the following:

(1) Good load distribution
(2) Balance (both front to rear and right to left)
(3) Low center of gravity

Fixed components can be located in exterior compartments or in the interior of the vehicle to be functional and organized in a layout to be user-friendly in emergency applications. The following are examples of fixed equipment:

(1) Electrical generators
(2) Water tanks, fire pumps, and other fire-fighting equipment
(3) Air cascades or compressors
(4) Reels of all types

B.2.3 A major support function of any fire apparatus, no matter the type, is the portable equipment. That is why this document places so much emphasis on final GVWR and carrying capacity of the completed vehicle, which includes both fixed and portable equipment.

The listings of portable and fixed equipment are so variable, depending on the mission of the vehicle, that the fire department needs to measure and weigh its specific equipment.

The fire department should classify the equipment as follows:

(1) Existing — currently owned equipment that will be carried
(2) Proposed — new equipment that will be carried as the apparatus goes in service
(3) Future — equipment that might be carried in the future

In this way, a chassis with an adequate GVWR can be provided to ensure that the vehicle will not be overloaded in the future.

B.2.4 After determining the list of present, proposed, and future equipment, the fire department should analyze the "actual" cubic feet (cubic meters) of space necessary for the equipment. One source of information is comparing the equipment to be carried on the new apparatus with the equipment carried on existing apparatus, and thus the relative space requirements. The actual usable space in compartments also should be considered, in addition to the individual cubic feet (cubic meters) for each item of equipment to be carried. The following factors might increase the required cubic feet (cubic meters) of storage space required and thus the size of the vehicle body:

(1) Compartment door and box pan interference
(2) Mounting implications
(3) Compartment shelving
(4) Slide trays
(5) Components of the body such as compartment flanges, notches, and other interferences that affect removal of equipment from compartments
(6) Ventilation of generator, air compressor, or other equipment

B.2.5 Where local operating conditions necessitate apparatus of unusual design, the purchaser needs to define carefully the special requirements in the specifications. Height, width, under-vehicle clearance, wheelbase, turning radius, length, and so forth might occasionally need special attention. For example, a community with many narrow, winding streets should have apparatus capable of readily negotiating switchbacks without delay.

B.2.6 This standard is designed to ensure sound equipment that is capable of good performance, with the inclusion of restrictive features only where needed to specify minimum requirements. The tests are an important feature, and the results should be carefully analyzed to ensure that the completed apparatus meets the specified performance.

Since the passage of Public Law 89-563, the National Traffic and Motor Vehicle Safety Act of 1966, the federal government has adopted certain motor vehicle safety standards applicable to all manufacturers of trucks, including fire apparatus. It is unlawful for a manufacturer to deliver a truck not in compliance with these federal standards. These federal safety standards are frequently changed, and their provisions make the incorporation of certain features and devices mandatory. Apparatus manufacturers face substantial penalties for infraction of these rules and, therefore, cannot build apparatus to specifications that would require them to perform unlawfully or to delete required items or to include any that are illegal.

Additional requirements are placed on both apparatus and engine manufacturers by the Clean Air Act, which is enforced by the Environmental Protection Agency (EPA). These EPA standards have resulted in major changes in the performance of many engines. Neither the engine manufacturer nor the apparatus manufacturer is permitted to modify an engine once it has been certified to EPA standards. Because of the EPA standards, it is often necessary to install larger engines than might have been previously used in order to obtain the same apparatus performance.

Copyright National Fire Protection Association
Provided by IHS under license with NFPA
No reproduction or networking permitted without license from IHS
Not for Resale

B.2.7 It is often useful, especially for complex apparatus, to plan an engineering meeting with the apparatus manufacturer's design team before construction begins. This allows for the optimum combination of the user's understanding of the requirements and the manufacturer's design experience in creating solutions.

Many apparatus purchasers find it favorable to provide for an interim inspection at the apparatus assembly plant. The advantages of such a provision include the opportunity to evaluate construction prior to final assembly and painting. The specifications should detail the particulars of such an inspection trip.

The chief of the fire department (or a designated representative) normally exercises the acceptance authority following satisfactory completion of tests and inspections for compliance with purchase specifications. The specifications should provide details of delivery expectations, including the desired instruction, the required acceptance tests, and who is responsible for the various costs associated with the delivery and acceptance.

B.2.8 Instruction and demonstrations for designated fire department personnel are essential to ensure that the purchaser and user are aware of, and instructed in, the proper operation, care, and maintenance of the apparatus acquired. The instruction and demonstrations should provide the initial instruction on the new apparatus. This is typically delivered by a qualified representative of the contractor in the user's community. The specifications should clearly identify the arrangement for furnishing the instruction, including where it is to be provided, its duration, and what instructional aids, such as video tapes or manuals, are to be furnished.

B.2.9 The purchaser should also define in the specifications the warranty desired for the completed apparatus. The warranty is a written guarantee of the integrity of the apparatus or its components that defines the manufacturer's responsibility within a given time period. The warranty is sometimes extended for a second warranty period beyond the terms of the basic warranty for specific components, such as the engine, pump, frame, and water tank. If a secondary manufacturer is involved in modifying components that are warranted by the original manufacturer, the responsibility for warranty work should be clearly understood by the original manufacturer, the secondary manufacturer, the contractor, and the purchaser.

B.2.10 The purchaser might want a warranty bond to ensure that any warranty work will be performed, even if the apparatus manufacturer should go out of business. A warranty bond is a third-party secured bond established by the manufacturer before delivery of a vehicle to guarantee workmanship, quality of material, or other stated performance of the vehicle components.

B.2.11 Finally, it is recommended that the fire chief, fire department staff, or committee assigned to develop the specifications consult with the purchaser's attorney, engineer, and other appropriate officials for assistance in developing the detailed specifications.

B.2.12 The form in Figure B.2 is a good way to document the specifications. All the items of information marked with an asterisk (*) generally are required in order for the manufacturer to bid on and build the apparatus. The other items are details about which the purchaser might want to specify special requirements. In many cases, the purchaser should specify additional details only if the purchaser is experienced in that area and has specific, unusual requirements. Consult with manufacturers or others with experience in apparatus architecture and specifications if necessary.

B.3 Obtaining and Studying Proposals. When the specifications are complete, they should be distributed to apparatus manufacturers and contractors with a request for bids or proposals to furnish the specified apparatus. The request should specify a date, time, and place for the formal opening of the bids. This date should allow at least 1 month for the engineering departments of apparatus manufacturers to study the specifications and estimate the cost of the apparatus. More time could be required if engineering drawings of the proposed apparatus are required.

B.3.1 The request also should state the time period during which the purchaser expects the bidder to honor the bid price and whether a bid bond is required. A bid bond guarantees that if a contract is offered to the bidder within the defined time period, the bidder will enter into the contract under the terms of the bid.

B.3.2 It is recommended that a pre-bid meeting be held between the purchaser of a piece of fire apparatus and the apparatus manufacturers or their agents prior to the official release of the apparatus specifications. Such a meeting is designed to allow for a detailed review of the draft specifications by all present at the meeting. Problems with the specifications, ideas on how to provide the purchaser with the desired apparatus in other ways, clarification of the purchaser's intent, and other questions can be resolved prior to the formal bid process. The meeting can often resolve misunderstandings or prevent problems before they occur.

B.3.3 With a performance specification, it is usually possible to obtain more favorable bids, since there is genuine competition and the specifications are not overly restrictive. The bid should be accompanied by a detailed description of the apparatus, a list of equipment to be furnished, and other construction and performance details, including, but not limited to, estimated weight, wheelbase, principal dimensions, transmission, and axle ratios. The purpose of the contractor's specifications is to define what the contractor intends to furnish and deliver to the purchaser.

B.3.4 Manufacturers' proposals might include amendments and exceptions. Frequently, these changes are offered to meet price requirements or because individual manufacturers prefer to build apparatus in a manner more convenient to them. If the intent of the original specification is not changed and the bid is favorable, the purchaser should consider accepting these amendments with the approval of the purchasing authority. On the other hand, extreme care should be taken to avoid allowing exceptions that devalue the apparatus and give one bidder an advantage.

Copyright National Fire Protection Association
Provided by IHS under license with NFPA
No reproduction or networking permitted without license from IHS
Not for Resale

B.3.5 The purchaser should study the proposals, look for deviations from the specifications, and obtain clarification where necessary. If the purchaser has specifically provided for alternatives when calling for bids, extra care should be exercised when evaluating the proposals because combinations of complicated bid information will need careful analysis. The financial arrangements, a delivery date, and the method of delivery should be stipulated and agreed to by the purchasing authority.

B.4 Awarding the Contract. With the award of a contract, it is important for the purchasing authority to understand exactly whom the contract is with and the nature of the relationship with the apparatus manufacturer. Some apparatus manufacturers work through a dealer network in which the dealer purchases the apparatus from a manufacturer, including taking title, and then resells the apparatus to the purchasing authority. Other manufacturers work through sales agents or representatives who solicit and negotiate a contract between a purchasing authority and a manufacturer but who never take title to the apparatus. This difference can affect where the responsibility lies for the proper fulfillment of the contract.

B.4.1 Some purchasing authorities require a performance bond as part of the contract. A performance bond is a bond executed in connection with a contract that guarantees that the contractor will fulfill all the undertakings, covenants, terms, conditions, and agreements contained in the contract. Should the contractor fail to meet the terms of the contract, the bonding company will be responsible for the difference in cost between the original contract price and the new price of the apparatus when it has to be supplied by another contractor.

B.4.2 Before signing a contract, the purchaser should make certain that the successful bidder has a complete and thorough understanding of the specifications. If there are any disagreements, these should be resolved in writing and made part of the contract. If any changes are agreed upon, they should be stated in writing and be signed by both parties. The contract should not be signed until the fire chief (or a designee) and the purchasing authority are satisfied.

B.5 Acceptance.

B.5.1 When the apparatus is ready for delivery and acceptance, the purchaser has a responsibility to check the completed apparatus carefully against the specifications, the contract, and the requirements of this document to ensure that all that was required is being delivered. This includes witnessing any required acceptance tests and verifying that the gross vehicle weight and the axle weight distribution are within the chassis and axle ratings. The delivery inspection form shown as Figure B.5.1(a) and the as-delivered weight analysis calculation worksheet shown as Figure B.5.1(b) can be useful in the inspection process. The weight distribution of in-service fire apparatus is critical to the safe operation of the apparatus. Figure B.5.1(b) and Table B.5.1 can help evaluate weight issues to confirm that the apparatus weight and distribution are within the chassis manufacturer's safe limits.

The instructions for completing the as-delivered weight analysis calculation worksheet in Figure B.5.1(b) are as follows:

(1) In row (a), fill in the vehicle weights from a certified scale with the following:
   (a) All manufacturing work completed
   (b) Water, fuel, and foam tanks full
   (c) Ground ladders stored on the vehicle

(2) In rows (b) through (k), calculate the expected hose load by multiplying the length of hose by the standard values for weight per unit length and enter the result in column 8. Use the values in Table B.5.1 or obtain specific values for the brand of hose being used.

(3) In row (1), multiply the number of seat belt–equipped seating positions by the NFPA allowance of 200 lb (90 kg) per person and enter the result in column 8.

(4) In row (m), enter the miscellaneous equipment allowance from Table 12.1 in column 8. Divide the hose, personnel, and equipment weights in column 8 between the front and rear axles according to the indicated percentages (or, as appropriate, from a detailed weight analysis).

(5) In row (n), enter the sum of the values from rows (a) through (m) for each of columns 8 through 11.

(6) In row (o), record the gross vehicle and gross axle weight ratings from the manufacturer's data label affixed inside the driving compartment.

(7) Subtract the values in row (n) from row (o) and enter the difference in row (p). This is the expected reserve axle capacity of the in-service vehicle. If this number is negative, consult the vehicle manufacturer.

B.5.2 The purchaser also should arrange for any instruction and demonstration included as part of the delivery and ensure that it is properly delivered.

Only when the purchaser is totally satisfied that the contract has been fulfilled should payment be authorized.

Table B.5.1 Typical Hose Weight Data

Nominal Hose Diameter		Weight per Unit Length	
in.	**mm**	**lb/ft**	**kg/m**
1	25	0.30	0.45
1½	38	0.38	0.57
1¾	44	0.43	0.64
2	52	0.50	0.75
2½	65	0.70	1.04
3	75	1.00	1.49
3½	90	1.20	1.79
4	100	0.85	1.27
4½	110	0.90	1.34
5	125	1.10	1.64
6	150	1.35	2.01

Copyright National Fire Protection Association
Provided by IHS under license with NFPA
No reproduction or networking permitted without license from IHS
Not for Resale

FIRE APPARATUS DELIVERY INSPECTION FORM

NFPA 1901 Paragraph	Topic	Description	Yes (Pass)	No (Fail)	N/A
4.9.1	Personnel protection	Guards or shields are provided around hot, moving, or rotating parts.	❑	❑	❑
4.9.2	Personnel protection	Isolation or insulation is provided to protect personnel from electrical shock.	❑	❑	❑
4.10.1	Controls and gauges	All controls, switches, instructions, gauges, and instruments needed for operation are illuminated.	❑	❑	❑
4.16.8 4.16.9	Brakes	Stopping distance measurement provided.	❑	❑	❑
4.19.1	Documentation and manuals	Required manufacturer's data provided.	❑	❑	❑
4.19.2	Documentation and manuals	Chassis operation and maintenance manual provided.	❑	❑	❑
4.19.2	Documentation and manuals	Pump operation and maintenance manual provided.	❑	❑	❑
4.19.2	Documentation and manuals	Aerial device operation and maintenance manual provided.	❑	❑	❑
4.19.2	Documentation and manuals	Aerial device load chart provided.	❑	❑	❑
4.19.2.3(4)	Documentation and manuals	Parts replacement information provided.	❑	❑	❑
4.19.2.3(6)	Documentation and manuals	Wiring diagram provided.	❑	❑	❑
4.19.2.3(7)	Documentation and manuals	Lubrication chart provided.	❑	❑	❑
4.19.2.4	Documentation and manuals	Major component manufacturers' manuals provided.	❑	❑	❑
5.3.3	Pump operator's panel	Platform for pump operator provided — pumper with aerial device.	❑	❑	❑
5.3.4	Warning signs	Electrocution hazard sign is visible to pump operator — pumper with aerial device.	❑	❑	❑
8.3.1	Pump operator's panel	Platform for pump operator provided — aerial apparatus with pump.	❑	❑	❑
8.3.2	Warning signs	Electrocution hazard sign is visible to pump operator — aerial apparatus with pump.	❑	❑	❑
9.2.3	Pump operator's panel	Platform for pump operator provided — quint.	❑	❑	❑
9.2.4	Warning signs	Electrocution hazard sign is visible to pump operator — quint.	❑	❑	❑
11.3.3	Pump operator's panel	Platform for pump operator provided — mobile foam with aerial device.	❑	❑	❑
11.3.4	Warning signs	Electrocution hazard sign is visible to pump operator — mobile foam with aerial device.	❑	❑	❑
12.1.3	Documentation and manuals	Federal Motor Vehicle Safety weight certification label.	❑	❑	❑
12.1.4.1	Information plate	Plate indicating the height, length, and GVWR of the vehicle is visible to the driver.	❑	❑	❑
12.3.1.1	Brakes	Anti-lock brake system functions.	❑	❑	❑
12.3.1.7	Brakes	Auxiliary braking system functions [required above 36,000 lb (16,000 kg) GVWR].	❑	❑	❑
12.3.2.3	Approach angle	Angle of approach at least 8 degrees (vertical / horizontal greater than 0.1405).	❑	❑	❑
12.3.2.3	Departure angle	Angle of departure at least 8 degrees (vertical / horizontal greater than 0.1405).	❑	❑	❑
12.3.4.2	Engine and fuel tank	Label is provided at the fuel fill to indicate type of fuel.	❑	❑	❑
13.8.12.1	Warning lights — responding	No yellow lights in Zone A in the "calling for right-of-way" mode.	❑	❑	❑

© 2003 National Fire Protection Association

FIGURE B.5.1(a) Delivery Inspection Form.

Copyright National Fire Protection Association
Provided by IHS under license with NFPA
No reproduction or networking permitted without license from IHS
Not for Resale

NFPA 1901 Paragraph	Topic	Description	Yes (Pass)	No (Fail)	N/A
13.8.12.1	Warning lights — responding	No white lights in Zone C in the "calling for right of way" mode.	❑	❑	❑
13.8.12.1	Warning lights — blocking	No white lights in any zone in the "blocking right of way" mode.	❑	❑	❑
13.8.16	Warning lights	Compliance documentation provided.	❑	❑	❑
13.9.1.1	Audible warning	Sirens certified to SAE J1849.			
13.9.2	Driving and crew compartment occupant protection	Audible warning devices and sirens are mounted low and in front of vehicle.	❑	❑	❑
13.10.1.1	Ground lighting	Rear of apparatus is illuminated for working.	❑	❑	❑
13.10.1.2	Ground lighting	Ground lighting is provided at areas where personnel will be stepping or climbing.	❑	❑	❑
13.10.1.3	Ground lighting	Ground lighting illuminates automatically with the cab doors.	❑	❑	❑
13.10.2.1	Work lighting	Hose bed is illuminated for working.	❑	❑	❑
13.10.5.1	Pump operator's panel	Pump compartment is illuminated.	❑	❑	❑
13.10.5.2	Pump operator's panel	Priming lubricant or reservoir area is illuminated.	❑	❑	❑
13.11(1)	Hazard light	Red light in driving compartment flashes if the parking brake is released and compartment doors are open.	❑	❑	❑
13.11(2)	Hazard light	Red light in driving compartment flashes if the parking brake is released and a ladder or equipment rack is not stowed.	❑	❑	❑
13.11(3)	Hazard light	Red light in driving compartment flashes if the parking brake is released and stabilizers are not stowed.	❑	❑	❑
13.11(4)	Hazard light	Red light in driving compartment flashes if the parking brake is released and a powered light tower is raised.	❑	❑	❑
13.11(5)	Hazard light	Red light in driving compartment flashes if the parking brake is released and other hazard is deployed.	❑	❑	❑
13.14.3.2	Electrical, low voltage	Reserve capacity test documentation provided.	❑	❑	❑
13.14.3.3	Electrical, low voltage	Alternator performance test at idle documentation provided.	❑	❑	❑
13.14.3.4	Electrical, low voltage	Alternator performance test at full load documentation provided.	❑	❑	❑
13.14.4	Electrical, low voltage	Low voltage alarm test documentation provided.	❑	❑	❑
13.15	Electrical, low voltage	Load analysis documentation provided.	❑	❑	❑
14.1.1	Cab occupant protection	Driving and crew compartment(s) fully enclosed.	❑	❑	❑
14.1.2	Warning signs	Cab occupant capacity sign provided and visible to the driver.	❑	❑	❑
14.1.3	Driving and crew compartment occupant protection	Seat belts are provided for each driving and crew compartment occupant.	❑	❑	❑
14.1.3.5	Warning signs	A "Seat Belts Required" sign is visible from every seating position.	❑	❑	❑
14.1.8	Driving and crew compartment occupant protection	Headroom at each seating position meets 14.1.8 requirement.	❑	❑	❑

© 2003 National Fire Protection Association NFPA 1901 (p. 2 of 4)

FIGURE B.5.1(a) ***Continued***

Copyright National Fire Protection Association
Provided by IHS under license with NFPA
No reproduction or networking permitted without license from IHS
Not for Resale

NFPA 1901 Paragraph	Topic	Description	Yes (Pass)	No (Fail)	N/A
14.1.10.1	Driving and crew compartment occupant protection	Each SCBA bracket is provided with a positive latching mechanical retaining device.	❑	❑	❑
14.1.11.1	Driving and crew compartment occupant protection	All equipment required to be used during a response is fastened.	❑	❑	❑
14.1.11.2	Driving and crew compartment occupant protection	Equipment not required to be used during a response is contained or fastened.	❑	❑	❑
15.4.2	Powered equipment rack	The rack has a device to lock it in the stowed position.	❑	❑	❑
15.4.4	Powered equipment rack	Operator can watch the rack from the controls while it is being deployed.	❑	❑	❑
15.4.6	Powered equipment rack	The rack is equipped with lights that flash when it is not stowed.	❑	❑	❑
15.4.7	Powered equipment rack	The rack has reflective devices to make it more visible when deployed.	❑	❑	❑
15.6.2	Pump compartment	Pump compartment access — no dimension less than 18 in. (460 mm).	❑	❑	❑
15.7.1.1	Step height	First step no more than 24 in. (610 mm) and no more than 18 in. (460 mm) between any other step.	❑	❑	❑
15.7.1.2	Step size	All steps have minimum area of 35 in.^{2} (22,580 mm^2).	❑	❑	❑
15.7.1.2	Step size	All steps have at least 8 in. (200 mm) clearance between leading edge and any obstruction.	❑	❑	❑
15.7.1.2	Step size	All steps can have a 5 in. (125 mm) diameter disk placed on them without overlapping the edge.	❑	❑	❑
15.7.1.3	Platform size	All platforms have at least 8 in. (200 mm) clearance between leading edge and any obstruction.	❑	❑	❑
15.7.1.4	Ladder rungs	All ladder rungs have at least 7 in. (180 mm) between them and the body or other obstruction.	❑	❑	❑
15.7.2	Step surfaces	Steps, platforms, and ladders properly mounted.	❑	❑	❑
15.7.3.5	Step surfaces	Step surface slip-resistance documentation provided.	❑	❑	❑
15.7.4	Warning signs	Sign warning that riding is prohibited should be visible at rear platform.	❑	❑	❑
15.7.4	Warning signs	Sign warning that riding is prohibited should be visible at cross walkway.	❑	❑	❑
15.8.1	Hand rails	Handrails are provided at each entrance to a driving or crew compartment.	❑	❑	❑
15.8.1	Hand rails	Handrails are provided at each position where steps or ladders for climbing are provided.	❑	❑	❑
15.8.3	Hand rails	All handrails have a diameter between 1 in. and 1⅝ in. (25 mm and 42 mm).	❑	❑	❑
15.8.3	Hand rails	All handrails have 2 in. (52 mm) of clearance to any other surface.	❑	❑	❑
15.8.4	Hand rails	All handrails are designed to reduce the possibility of hand slippage.	❑	❑	❑
15.9.3	Reflective trim	Side of vehicle has stripe at least 4 in. (100 mm) wide and 50 percent of vehicle length.	❑	❑	❑
15.9.3	Reflective trim	Front of vehicle has stripe at least 4 in. (100 mm) wide and 25 percent of the front width.	❑	❑	❑

© 2003 National Fire Protection Association

FIGURE B.5.1(a) ***Continued***

Copyright National Fire Protection Association
Provided by IHS under license with NFPA
No reproduction or networking permitted without license from IHS
Not for Resale

NFPA 1901 Paragraph	Topic	Description	Yes (Pass)	No (Fail)	N/A
15.9.3	Reflective trim	Rear of vehicle has stripe at least 4 in. (100 mm) wide and 50 percent of the rear width.	❑	❑	❑
16.6.1.3 18.6.1.3	Warning signs	A "serious injury or death" sign is visible.	❑	❑	❑
16.7.9 18.7.9	Pump operator's panel	All discharge connections at pump panel are 2½ in. (65 mm) or less.	❑	❑	❑
16.9.2 18.9.2	Pump operator's panel	All gauges, intakes, outlets, and controls are illuminated.	❑	❑	❑
16.11.2 18.11.2	Pump operator's panel	Engine throttle is between 42 in. (1070 mm) and 72 in. (1800 mm) above operator platform.	❑	❑	❑
16.12.1.1 18.12.1.1	Pump operator's panel	The instruments listed in 16.12.1.1 or 18.12.1.1 are all located on the pump panel in a group.	❑	❑	❑
16.12.1.4 18.12.1.4	Pump operator's panel	Visible and audible warnings are provided for low engine oil pressure and high coolant temperature.	❑	❑	❑
16.12.2.1 18.12.2.1	Pump operator's panel	Master intake and pump discharge gauges no more than 8 in. (200 mm) apart edge to edge.	❑	❑	❑
16.12.2.1 18.12.2.1	Pump operator's panel	Master intake is located to the left of or below the pump discharge gauge.	❑	❑	❑
16.12.2.1.4 18.12.2.1.4	Pump operator's panel	Gauges are labeled as "Pump Intake" and "Pump Discharge."	❑	❑	❑
16.12.3.3 18.12.3.3	Pump operator's panel	Discharge instrumentation is within 6 in. (150 mm) of the control.	❑	❑	❑
16.13.7 18.13.6	Tank and piping capacity	Tank-to-pump capacity documentation provided.	❑	❑	❑
16.13.8 18.13.7	Tank and piping capacity	Hydrostatic piping test documentation provided.	❑	❑	❑
19.6.2	Tank and piping capacity	Tank capacity certification provided.	❑	❑	❑
20.18.2	Aerial operator's station	Platform for aerial device operator provided.	❑	❑	❑
20.18.3	Warning signs	Electrocution hazard sign is visible to aerial device operator.	❑	❑	❑
20.25	Piping test	Aerial device water system hydrostatic test documentation provided.	❑	❑	❑
21.9.4	Documentation and manuals	Foam system operations and maintenance manual provided.	❑	❑	❑
21.11	Calibration and testing	Foam system calibration and testing documentation provided.	❑	❑	❑
22.8.4	Documentation and manuals	CAFS operation and maintenance manual provided.	❑	❑	❑
22.9	Testing	CAFS testing documentation provided			
23.4.9	Electrical, line voltage	Power source specification label located at the operator's control station.	❑	❑	❑
23.16.5	Electrical, line voltage	Third party certification of testing provided.	❑	❑	❑
24.6.2	Work surfaces	Chair-level work surfaces are 28 in. to 30 in. (710 mm to 760 mm) above the floor.	❑	❑	❑
24.6.3	Work surfaces	Stand-up work surfaces are 36 in. to 40 in. (900 mm to 1000 mm) above the floor.	❑	❑	❑
25.9.5	SCBA fill station	Test certification is provided.	❑	❑	❑
25.14.4	Air purification	Test documentation or certification that pure air is being produced is provided.	❑	❑	❑

© 2003 National Fire Protection Association

NFPA 1901 (p. 4 of 4)

FIGURE B.5.1(a) ***Continued***

Copyright National Fire Protection Association
Provided by IHS under license with NFPA
No reproduction or networking permitted without license from IHS
Not for Resale

AS-DELIVERED WEIGHT ANALYSIS CALCULATION WORKSHEET

Axle Rating Reserve Capacity Determination

	1	2	3	4	5	6	7	8	9	10
							Total Vehicle	**Front Axle**	**Rear Axle or Tandem**	**Tiller Axle**
a	Weight at delivery (with water)									
			Hose Length (ft or m)		**Weight per Unit Length (lb or kg)**				**(100%)**	
b	Hose allowance	Main hose bed		(×)		(=)				
c	Hose allowance	Main hose bed		(×)		(=)				
d	Hose allowance	Main hose bed		(×)		(=)				
								(50%)	**(50%)**	
e	Hose allowance	Cross lay		(×)		(=)				
f	Hose allowance	Cross lay		(×)		(=)				
g	Hose allowance	Cross lay		(×)		(=)				
								(100%)		
h	Hose allowance	Front bumper		(×)		(=)				
i	Hose allowance	Suction hose		(×)		(=)				
j	Hose allowance	Other		(×)		(=)				
k	Hose allowance	Other		(×)		(=)				
			Seating Capacity (people)		**Weight per person**			**(100%)**		
l	Personnel allowance			(×)	200 lb (90 kg)	(=)				
									(100%)	
m	Miscellaneous equipment allowance (from Table 12.1)									
n	Total expected in-service weight (sum of rows a through m)									
o	Axle weight ratings (from chassis manufacturer's data label)									
p	Expected reserve capacity									

© 2003 National Fire Protection Association NFPA 1901

FIGURE B.5.1(b) As-Delivered Weight Analysis Calculation Worksheet.

Copyright National Fire Protection Association
Provided by IHS under license with NFPA
No reproduction or networking permitted without license from IHS Not for Resale

Annex C Weights and Dimensions for Common Equipment

This annex is not a part of the requirements of this NFPA document but is included for informational purposes only.

C.1 NFPA in cooperation with the Fire Apparatus Manufacturers Association (FAMA) has provided the worksheet shown as Figure C.1 for use by the purchaser in calculating the portable equipment load anticipated to be carried on the apparatus. To ensure that the apparatus chassis is capable of carrying the installed equipment (pump, tank, aerial device, etc.) plus the specified portable equipment load with an appropriate margin of safety, the purchaser should use this worksheet to provide apparatus vendors with the weight of the equipment they anticipate carrying when the apparatus is placed in service.

C.1.1 The approximate measurements and weights of equipment that are commonly available and used during fire department operations are listed on the worksheet. The purchaser should fill in the number of units of each piece of equipment they anticipate carrying in the column titled "Quantity" and multiply that by the weight per unit to get the total weight. The dimensions of each piece of equipment are given to assist in planning compartment size or the location on the fire apparatus. Where the purchaser desires to carry specific equipment in a specific compartment, that compartment designation should be shown in the column titled "Compartment Location."

C.1.2 An Excel spreadsheet that contains the information shown in Figure C.1 can be downloaded from the FAMA website, *www.fama.org*, and customized to show only the equipment a department expects to carry. There are additional columns on the spreadsheet to assist the fire department in maintaining records of the equipment it carries on the apparatus.

--`,,```,,,,````-`-`,,`,,`,`,,`---

Copyright National Fire Protection Association
Provided by IHS under license with NFPA
No reproduction or networking permitted without license from IHS
Not for Resale

WORKSHEET FOR DETERMINING EQUIPMENT WEIGHT ON FIRE APPARATUS

Equipment Description	Dimensions (in.)	Weight (lb)	Quantity	Total Weight (lb)	Compartment Location
Ground Ladders					
Ladder, A-frame combo, 14 ft	20.5 × 6.25 × 116	33			
Ladder, attic	2.5 × 1.5 × 137	14			
Ladder, combo folding (Little Giant type)	20 × 7.75 × 102	28			
Ladder, extension, 2 section, 14 ft	21 × 5 × 115	53			
Ladder, extension, 2 section, 16 ft	21 × 5 × 129	59			
Ladder, extension, 2 section, 20 ft	21 × 5 × 144	66			
Ladder, extension, 2 section, 24 ft	21 × 5 × 171	75			
Ladder, extension, 2 section, 28 ft	22 × 5.75 × 199	114			
Ladder, extension, 3 section, 28 ft	25 × 8.25 × 160	145			
Ladder, extension, 3 section, 30 ft	25 × 8.25 × 174	158			
Ladder, extension, 3 section, 35 ft	25 × 8.25 × 188	170			
Ladder, folding, 8 ft	22.5 × 5.5 × 96	38			
Ladder, folding, 10 ft	30.75 × 5.5 × 120	47			
Ladder, Fresno, 10 ft	13.5 × 5 × 87	41			
Ladder, Fresno, 12 ft	13.5 × 5 × 101	46			
Ladder, Fresno, 14 ft	13.5 × 5 × 115	51			
Ladder, roof, 12 ft, with hooks	19.25 × 2.75 × 144	36			
Ladder, roof, 14 ft, with hooks	19.25 × 2.75 × 168	42			
Ladder, roof, 16 ft, with hooks	19.25 × 2.75 × 192	48			
Pike Poles					
Hook, dry wall, 6 ft	Head 7.25 × 5.5 × 5, handle 64.75 × 1.5 ID	8			
Hook, dry wall, 8 ft	Head 7.25 × 5.5 × 5, handle 88.75 × 1.5 ID	10			
Pike pole, 6 ft	1.5 × 72	6			
Pike pole, 8 ft	1.5 × 96	8			
Pike pole, 10 ft	1.5 × 120	10			
Pike pole, 12 ft	1.5 × 144	12			
Pike pole, closet hook, 3 ft	1.5 × 36	5			
Hose					
Hose, booster, ¾ in. × 100 ft	0.75 × 1200	59			
Hose, booster, ¾ in. × 50 ft	0.75 × 600	30			
Hose, booster, 1 in. × 100 ft	1 × 1200	79			
Hose, booster, 1 in. × 50 ft	1 × 600	41			
Hose, DJ, 1.5 in. × 50 ft (roll)	3 × 18.5	18			
Hose, DJ, 1.75 in. × 50 ft, w/ 1.5-in. couplings (roll)	3.25 × 18.5	19			
Hose, DJ, 2.5 in. × 50 ft (roll)	4.5 x 20	32			

NFPA 1901 (p. 1 of 17)

FIGURE C.1 Worksheet for Determining Equipment Weight on Fire Apparatus.

Copyright National Fire Protection Association
Provided by IHS under license with NFPA
No reproduction or networking permitted without license from IHS Not for Resale

Equipment Description	Dimensions (in.)	Weight (lb)	Quantity	Total Weight (lb)	Compartment Location
Hose, DJ, 2 in. × 50 ft, w/ 1.5 in. couplings (roll)	3.75 × 18.5	20.5			
Hose, DJ, 3 in. × 50 ft, w/ 2.5-in. couplings (roll)	5.25 × 20	40			
Hose, forestry, 1 in. × 100 ft (roll)	1.5 × 32	20			
Hose, LW, cotton, 1.5 in. × 100 ft (roll)	3.25 × 30	22			
Hose, LW, cotton, 1.5 in. × 50 ft (roll)	3.25 × 15	11.5			
Hose, LW, cotton, 2 in. × 50 ft, w/ 1.5-in. couplings (roll)	3.75 × 15.5	14			
Hose, LW, cotton, 4 in. × 100 ft, w/ Storz couplings (roll)	5.75 × 24	68			
Hose, LW, cotton, 5 in. × 100 ft, w/ Storz couplings (roll)	6.75 × 25	84			
Hose, LW, nitrile jacket, 1 in. × 100 ft (roll)	3.25 × 40	33			
Hose, LW, nitrile jacket, 1 in. × 50 ft (roll)	3.25 × 20	18			
Hose, LW, nitrile jacket, 2 in. × 50 ft (roll)	3.75 × 21	24			
Hose, LW, Nitrile jacket, 4 in. × 100 ft, w/ Storz coupling (roll)	5.75 × 24	75			
Hose, LW, nitrile jacket, 5 in. × 100 ft, w/ Storz coupling (roll)	6.75 × 26.5	97			
Suction Hose					
Hose, hard suction, 2.5 in. × 8 ft	3 × 96	22			
Hose, hard suction, 2.5 in. × 10 ft	3 × 120	27			
Hose, hard suction, 3 in. × 10 ft, w/ 2.5-in. couplings	3.5 × 120	35			
Hose, hard suction, 4 in. × 10 ft	4.5 × 120	42			
Hose, hard suction, 4.5 in. × 10 ft	5.5 × 120	58			
Hose, hard suction, 5 in. × 10 ft	6 × 120	87			
Hose, hard suction, 6 in. × 10 ft	7 × 120	102			
Strainers					
Strainer, barrel, 2.5 in.	3.25 × 6.3	3.5			
Strainer, barrel, 4 in.	5.25 × 15.25	10.5			
Strainer, barrel, 4.5 in.	6.75 × 15.25	12.5			
Strainer, basket, 3 in.	4.75 × 15.25	9.5			
Strainer, basket, 4 in.	5.75 × 15.25	11.25			
Strainer, floating, 4.5 in.	7 × 21.5 × 26.5	26			
Strainer, floating, 5 in.	7 × 21.5 × 26.5	26			
Strainer, floating, 6 in.	7 × 21.5 × 26.5	31			
Strainer, low level, 5 in.	16 × 13 × 12	20			
Strainer, low level, 6 in.	16 × 13 × 12	20			
Strainer, rope, 20 ft × 0.5 in.	2 × 2 × 4	1			

NFPA 1901 (p. 2 of 17)

FIGURE C.1 *Continued*

--`,,```,,,,````-`-`,,`,,`,`,,`---
Copyright National Fire Protection Association
Provided by IHS under license with NFPA
No reproduction or networking permitted without license from IHS
Not for Resale

Equipment Description	Dimensions (in.)	Weight (lb)	Quantity	Total Weight (lb)	Compartment Location
Portable or Folding Tank					
Tank, portable, 1000 gal	99 × 7 × 30	125			
Tank, portable, 2000 gal	135 × 7 × 30	165			
Tank, portable, 3000 gal	159 × 7 × 30	185			
Nozzles					
Deck gun, mounted, 2.5 in., manual type	15.5 × 17 × 18.5	22.5			
Deck gun, portable, 2.5 in., manual type	22.25 × 25 × 21	38			
Nozzle, booster, 1 in. aluminum	2.5 ID × 9.6	4.3			
Nozzle, booster, 1 in. brass	2.5 ID × 9.6	3.6			
Nozzle, cellar, 1.5 in., brass	5 ID × 5	7.5			
Nozzle, cellar, 2.5 in., brass	7 ID × 5	9.5			
Nozzle, chimney, w/ accessory bag	20 × 12 × 6.5	15			
Nozzle, foam attachment, 1.5 in.	6 ID (bottom) × 3 ID (tip) × 15.9	4.8			
Nozzle, foam, 2.5 in., w/ pickup tube	4.5 ID × 40.5	4.5			
Nozzle, foam, deck gun, w/ pickup hose	Pickup 7.1, nozzle 6 × 7	19			
Nozzle, fog, deck gun	6 ID × 10	11.9			
Nozzle, forestry, 1 in.	2 ID × 6.8	1			
Nozzle, handline, 1.5 in. aluminum	2.5 ID × 9.9	4.4			
Nozzle, handline, 1.5 in. brass	2.5 ID × 9.9	6.5			
Nozzle, handline, 2.5 in. aluminum	3 ID × 12	6.4			
Nozzle, handline, 2.5 in. brass	3 ID × 12	8			
Nozzle, piercing, 1.5 in.	51.5 × 1.5 × 6.5	11			
Nozzle, play pipe, w/ shaper, 2.5 in.	3 ID × 11.25	8			
Nozzle, play pipe, w/ shaper, deck gun, 2.5 in. aluminum	3.5 ID × 3	1.5			
Nozzle, play pipe, w/ shaper, deck gun, 2.5 in. brass	3.5 ID × 3	3.5			
Nozzle, playpipe, 2.5 in. aluminum	10 × 1.5 × 7 (coupling 3.5 × 2)	5.8			
Nozzle, playpipe, 2.5 in. brass	10 × 1.5 × 7 (coupling 3.5 × 2)	11.1			
Nozzle, stacked tips, aluminum, 2.5 in.	3 ID × 9	4			
Nozzle, stacked tips, brass, 2.5 in.	3 ID × 9	8			
Nozzle, stacked tips, deck gun, aluminum, 2.5 in.	3.5 ID × 16.75	4			
Nozzle, straight tip, 1.5 in. aluminum, w/ shutoff	Shutoff 2.5 × 4.9, tip 1.5 × 4.5	2.5			
Nozzle, straight tip, 1.5 in. brass, w/ shutoff	Shutoff 2.5 × 4.9, tip 1.5 × 4.5	5.8			
Nozzle, water curtain, 2.5 in.	10 × 3 × 10	13			

NFPA 1901 (p. 3 of 17)

FIGURE C.1 *Continued*

Copyright National Fire Protection Association
Provided by IHS under license with NFPA
No reproduction or networking permitted without license from IHS
Not for Resale

Equipment Description	Dimensions (in.)	Weight (lb)	Quantity	Total Weight (lb)	Compartment Location
Adapters, Fittings, Caps					
Adapter, 4 in. F × 4 in. STZ, aluminum	3.75 × 6 ID	2.5			
Adapter, 4 in. F × 5 in. STZ, aluminum	3.5 × 7.75 ID	2.5			
Adapter, 4 in. STZ × 5 in. STZ, aluminum	3.75 × 7.75 ID	2.5			
Adapter, 4.5 in. F × 4 in. STZ, aluminum	3.75 × 6.5 ID	2.5			
Adapter, 4.5 in. F × 5 in. STZ, aluminum	3.5 × 7.75 ID	2.5			
Adapter, 5 in. F × 4 in. STZ, aluminum	3.5 × 6 ID	2.5			
Adapter, 5 in. F × 5 in. STZ, aluminum	4 × 7.75 ID	2.5			
Adapter, 6 in. F × 4 in. STZ, aluminum	3.5 × 8.75 ID	2.5			
Adapter, 6 in. F × 5 in. STZ, aluminum	4 × 8.75 ID	2.5			
Adapter, 6 in. F × 6 in. STZ, aluminum	4 × 8.75 ID	2.5			
Adapter, double female, 1.5 in., aluminum	3 × 2.5 ID	1			
Adapter, double female, 1.5 in., brass	3 × 2.5 ID	2			
Adapter, double female, 2.5 in., aluminum	3.25 × 4 ID	1			
Adapter, double female, 2.5 in., brass	3.25 × 4 ID	4			
Adapter, double male, 1.5 in., aluminum	2.5 × 2 ID	0.5			
Adapter, double male, 1.5 in., brass	2.5 × 2 ID	1			
Adapter, double male, 2.5 in., aluminum	3 × 4 ID	2			
Adapter, double male, 2.5 in., brass	3 × 4 ID	1			
Adapter, reducer, 1.5 in. F × 1 in. M, aluminum	1.5 × 3 ID	0.5			
Adapter, reducer, 1.5 in. F × 1 in. M, brass	1.5 × 3 ID	1			
Adapter, reducer, 2.5 in. F × 1.5 in. M, aluminum	2 × 4 ID	0.5			
Adapter, reducer, 2.5 in. F × 1.5 in. M, brass	2 × 4 ID	3			
Elbow, 2.5 in. F × 2.5 in. M, 30 degree, brass	6.5 × 4.5 ID	4.5			
Elbow, 2.5 in. F × 4 in. STZ, 30 degree, aluminum	7.5 × 6 ID	6			
Elbow, 2.5 in. F × 5 in. STZ, 30 degree, aluminum	7.5 × 7.5 ID	6.5			

NFPA 1901 (p. 4 of 17)

FIGURE C.1 *Continued*

Copyright National Fire Protection Association
Provided by IHS under license with NFPA
No reproduction or networking permitted without license from IHS
Not for Resale

Equipment Description	Dimensions (in.)	Weight (lb)	Quantity	Total Weight (lb)	Compartment Location
Elbow, 3 in. F × 4 in. STZ, 30 degree, aluminum	7.5 × 6 ID	6.5			
Elbow, 3 in. F × 5 in. STZ, 30 degree, aluminum	7.5 × 7.5 ID	7			
Elbow, 4 in. F × 4 in. STZ, 30 degree, aluminum	8 × 6 ID	8			
Elbow, 4 in. F × 5 in. STZ, 30 degree, aluminum	8 × 7.5 ID	8.5			
Intake valves					
Intake valve, external, 5 in. F × 4 in. STZ, w/ relief valve, aluminum	11 × 8.5 ID, 8 × 6.75 ID, 6 × 3 × 2.75	22.5			
Intake valve, external, 5 in. F × 4 in. STZ, w/ relief valve, brass	11 × 8.5 ID, 8 × 6.75 ID, 6 × 3 × 2.75	63.5			
Intake valve, external, 5 in. F × 5 in. M, w/ relief valve, aluminum	11 × 8.5 ID, 8 × 7.75 ID, 6 × 3 × 2.75	22.5			
Intake valve, external, 5 in. F × 5 in. M, w/ relief valve, brass	11 × 8.5 ID, 8 × 7.75 ID, 6 × 3 × 2.75	63.5			
Intake valve, external, 5 in. F × 5 in. STZ, w/ relief valve, aluminum	11 × 8.5 ID, 8 × 7.75 ID, 6 × 3 × 2.75	22.5			
Intake valve, external, 5 in. F × 5 in. STZ, w/ relief valve, brass	11 × 8.5 ID, 8 × 7.75 ID, 6 × 3 × 2.75	63.5			
Intake valve, external, 6 in. F × 4 in. STZ, w/ relief valve, aluminum	11 × 9.5 ID, 8 × 6.75 ID, 6 × 3 × 2.75	22.5			
Intake valve, external, 6 in. F × 4 in. STZ, w/ relief valve, brass	11 × 9.5 ID, 8 × 6.75 ID, 6 × 3 × 2.75	63.4			
Intake valve, external, 6 in. F × 5 in. STZ, w/ relief valve, aluminum	11 × 9.5 ID, 8 × 7.75 ID, 6 × 3 × 2.75	22.5			
Intake valve, external, 6 in. F × 5 in. STZ, w/ relief valve, brass	11 × 9.5 ID, 8 × 7.75 ID, 6 × 3 × 2.75	63.5			
Intake valve, external, 6 in. F × 6 in. M, w/ relief valve, aluminum	11 × 9.5 ID, 8 × 7.75 ID, 6 × 3 × 2.75	22.5			
Intake valve, external, 6 in. F × 6 in. M, w/ relief valve, brass	11 × 9.5 ID, 8 × 7.75 ID, 6 × 3 × 2.75	63.5			
Hose equipment					
Intake, valve, gated, 4.5 in. F × 2.5 in. M, aluminum	11 ID × 7	11.5			
Siamese, gated, 5 in. F × (3) 2.5 in. F	10.5 × 12 × 6	29			
Siamese, gated, 6 in. F × (3) 2.5 in. F	10.5 × 12 × 7	29			
Valve, hydrant, 2.5 in. F × 2.5 in. M, aluminum	10.75 × 4.75 × 7.75	5.5			
Valve, hydrant, 2.5 in. F × 2.5 in. M, brass	10.75 × 4.75 × 7.76	14			
Water thief, gated, 2.5 in. F × 2.5 in. M, × (2) 1.5 in. M, aluminum	10.25 × 10 × 6	11			
Water thief, gated, 2.5 in. F × 2.5 in. M, × (2) 1.5 in. M, brass	10.25 × 10 × 6	23.5			

NFPA 1901 (p. 5 of 17)

FIGURE C.1 *Continued*

Copyright National Fire Protection Association
Provided by IHS under license with NFPA
No reproduction or networking permitted without license from IHS
Not for Resale

Equipment Description	Dimensions (in.)	Weight (lb)	Quantity	Total Weight (lb)	Compartment Location
Wye, gated, 1.5 in. F × (2) 1 in. M, aluminum	4.75 × 6 × 3.25	1.75			
Wye, gated, 2.5 in. F × (2) 1.5 in. M, aluminum	7.75 × 8.25 × 5	4.5			
Wye, gated, 2.5 in. F × (2) 1.5 in. M, brass	7.75 × 8.25 × 5	8.5			
Wye, gated, 4 in. STZ distribution, w/ relief valve	15 × 8.75 × 11.25	24			
Wye, gated, 4 in. STZ distribution, w/ relief valve	15 × 8.75 × 11.25	24			
Foam Equipment					
Eductor, foam, 1.5 in. F × 1.5 in. M	2.75 ID × 9.5	9.5			
Eductor, foam, pickup tube	1 ID × 159	7.5			
Foam, Class A, 5-gal pail	14.5 × 11.25 ID	45			
Foam, Class B, 5-gal pail	14.6 × 11.25 ID	45			
Foam system, CAFS, wheeled	55.5 × 31 × 35	602			
Foam system, CAFS, skid	43 × 27 × 27	577			
Fire Ground Hand Tools					
Axe, flat head, 6 lb.	Head 8.75 × 5.25 × 1.25, handle 1.5 ID × 33	8			
Axe, pick head, 6 lb.	Head 11.5 × 5.25 × 1.25, handle 1.5 × 33	8.5			
Crow bar, steel, 36 in.	36 × 4 × 0.75	3.5			
Pry bar, steel, 48 in.	48 × 1 × 1	12.5			
Tool, Halligan	Body 29 × 2.5 × 1.75, point 4.25 × 1 × 1, flat 3.25 × 1.75 × 0.75	10.5			
Long Hand Tools					
Shovel, scoop, 48 in. D-handle	11 × 9 × 3, handle 49 × 1.5 ID	4.5			
Shovel, square end, 48 in. D-handle	9 × 11 × 3, handle 49 × 1.5 ID	4			
Shovel, round end, 48 in. D-handle	11.5 × 8.5 × 3, handle 49 × 1.5 ID	4			
Hammer, sledge, 10 lb.	Head 6.75 × 2.75 × 2.75, handle 1.75 ID × 33	13.5			
Fire Extinguishers					
Extinguisher, carbon dioxide, 15 lb. (CO_2), Class C	Extinguisher 26 × 6.75 ID, horn 11 × 4 ID	44.5			
Extinguisher, dry chemical, 10 lb., Class ABC	21.5 × 5.25 ID	17			
Extinguisher, dry chemical, 20 lb., Class ABC	25 × 7.5 ID	30			

NFPA 1901 (p. 6 of 17)

FIGURE C.1 *Continued*

Copyright National Fire Protection Association
Provided by IHS under license with NFPA
No reproduction or networking permitted without license from IHS
Not for Resale

Equipment Description	Dimensions (in.)	Weight (lb)	Quantity	Total Weight (lb)	Compartment Location
Extinguisher, foam, pressurized, 2.5 gal, Class B	24.25 × 7 ID	26			
Extinguisher, metal-X, 20 lb., Class D	27.75 × 16 ID	53			
Extinguisher, water, pressurized, 2.5 gal, Class A	24.25 × 7 ID	27			
Hose and Coupling Equipment					
Hose bridge, steel	23 × 32 × 6	42			
Hose, clamp, manual	29.5 × 1.75 × 9.75	15			
Hose, hoist, edge protector	12 × 6 × 6	7			
Hose, jacket, 2.5 in.	13 × 5.5 ID	16.5			
Hose, jacket, 3 in.	15 × 6 ID	26.75			
Hose, roller, air remover	20 × 5.5 × 3	5.5			
Hose, strap	6.5 x 5 × 0.5	0.5			
Mallet, rubber	Head 4 × 2 ID Handle 12 × 1 ID	2.5			
Wrench, hose, booster, pin lug	11.5 × 3.75 × 0.5	0.5			
Wrench, hose, spanner	11.5 × 3.75 × 0.5	0.5			
Wrench, hydrant	Head 6 × 3.75 × 1 Handle 16.5 × 0.75 ID	5			
Wrench, large diameter hose, LDH	4 × 3.75 × .5	0.5			
Wrench, spanner, combination	11.5 × 3.75 × 1	0.5			
Wrench, spanner, folding	5.25 × 2 × .5	0.5			
Smoke Ejectors					
Fan, smoke ejector, 16 in., electric	19.25 × 18.75 × 13	49			
Fan, smoke ejector, 20 in., electric	25.5 × 24.75 × 16.25	93			
Fan, smoke ejector, 24 in., electric	28.5 × 28 × 18.75	115			
Fan, smoke ejector, positive pressure, electric	19 × 18.75 × 12.75	48			
Fan, smoke ejector, positive pressure, gas	18.75 × 24.5 × 24.75	92			
Holder, fan, smoke ejector, door bar	25 × 4.5 × 3	6.5			
Traffic Control Equipment					
Traffic cones, plastic	8 × 8 × 3.5	10.5			
Traffic flares, case	16.5 × 6.75 × 7.5	27			
Tape, barrier, plastic roll	3.5 × 6.75 ID	3.5			
Vest, reflective	12 × 4.75 × 2	0.5			

NFPA 1901 (p. 7 of 17)

FIGURE C.1 *Continued*

Copyright National Fire Protection Association
Provided by IHS under license with NFPA
No reproduction or networking permitted without license from IHS
Not for Resale

Equipment Description	Dimensions (in.)	Weight (lb)	Quantity	Total Weight (lb)	Compartment Location
Small Rescue or Entry Equipment					
Bolt cutter, manual, 30 in.	29.25 × 6.25 × 1.25	13			
Hose, air, utility, low pressure, w/ couplings	600 × 0.75 ID	5.5			
Ram, battering, steel, w/ handles	20 × 6 ID	20			
Saw, cut off	19 × 14 × 15	35			
Tool, cutter, panel	7 × 1 × 0.5	0.5			
Tool, entry, "K tool"	4 × 3 × 2	2.5			
Tool, entry, rabbit hydraulic	24 × 18 × 8	28			
Small Hand Tools					
Chisel, coal, 1 in. × 12 in.	12 × 1 ID	1			
Chisel, cold, ½ in. × 6 in.	6 × 0.5 ID	0.5			
Chisel, cold, ¼ in. × 6 in.	6 × 0.25 ID	0.5			
Chisel, cold, ¾ in. × 10 in.	10 × 0.75 ID	0.5			
Cutter, glass, glazier's swivel cutter	12 × 4 × 6	4			
Drill, electric, hammer, battery powered	16.5 × 4.5 × 9	7			
File, metal, 10 in.	10 × 0.75 × 0.25	0.5			
Hammer, ballpeen, 12 oz.	Head 3.5 × 1 ID, handle 12 × 1 ID	1			
Hammer, ballpeen, 16 oz.	Head 3.75 × 1 ID, handle 12 × 1	1.5			
Hammer, ballpeen, 24 oz.	Head 3.75 × 1.25 ID, handle 12 × 1	2			
Hammer, ballpeen, 36 oz.	Head 4 × 1.25 ID, handle 12 × 1	2.5			
Hammer, claw	Head 5 × 1.25 ID, handle 13 × 1.25 ID	2.2			
Knife, cutter, seat belt	4 × 2 × 0.25	0.5			
Knife, putty, ¼ in.	7.25 × 1.25 × 0.5	0.5			
Knife, utility	6 × 1.25 × 0.75	0.5			
Pliers, arc joint, 10 in.	10 × 2.25 × 0.5	0.5			
Pliers, arc joint, 16 in.	16 × 4.5 × 0.5	0.5			
Pliers, diagonal cutting, 8 in.	8 × 2 × 0.5	0.5			
Pliers, lineman's, 8 in.	8 × 2 × 0.5	0.5			
Pliers, needle nose, 6in.	6 × 2 × 0.5	0.5			
Pliers, slip joint, 8 in.	8 × 1.75 × 0.5	0.5			
Pliers, vise grip, 10 in.	10 × 2 × 0.5	1			
Punch, center	4 × 0.25 ID	0.5			
Punch, window, spring loaded	5 × 0.5 ID	0.5			
Saw, drywall	8.5 × 1 ID	0.5			

NFPA 1901 (p. 8 of 17)

FIGURE C.1 *Continued*

--`,,```,,,,````-`-`,,`,,`,`,,`---
Copyright National Fire Protection Association
Provided by IHS under license with NFPA
No reproduction or networking permitted without license from IHS
Not for Resale

Equipment Description	Dimensions (in.)	Weight (lb)	Quantity	Total Weight (lb)	Compartment Location
Saw, hand hacksaw, w/ spare blades and wire blades	18.5 × 4 × 1	1.5			
Saw, hand, crosscut	28 × 6 × 1	1.5			
Screwdriver, Phillips, #2 × 6	8 × 1.25 ID	0.5			
Screwdriver, Phillips, #3 × 8	10.25 × 1.25 ID	0.5			
Screwdriver, slotted, ¼ × 2.5	2.5 × 1 ID	0.5			
Screwdriver, slotted, ¼ × 6	8 × 1 ID	0.5			
Screwdriver, slotted, ⅜ × 12	12 × 1.25 ID	0.5			
Screwdriver, slotted, 5⁄16 × 8	10 × 1.25 ID	0.5			
Shears, metal, snips	9.5 × 2.5 × 0.75	0.5			
Socket, spark plug	2.75 × 1 ID	0.5			
Tape, measure, roll	3.25 × 3.25 × 1.25	0.5			
Tool box, metal, 20 in., hand tools	20 × 8 × 9	10.5			
Tool, axe, hand	Head 5.5 × 3.75 × 0.75, handle 11.75 × 1.5 × 1	3.5			
Wrench, adjustable, 12 in.	12 × 3 × 0.25	1.5			
Wrench, adjustable, 8 in.	8 × 2 × 0.25	0.5			
Wrench, adjustable, 10 in.	10 × 2.5 × 0.25	1			
Wrench, combination, metric, open end, 8 mm to 18 mm (11 piece)	13 × 12 × 1	2.5			
Wrench, combination, SAE, open end, 5⁄16 in. to 1 in. (11 piece)	13 × 12 × 1	2.5			
Wrench, gas, shutoff	8 × 1.5 × 0.5	0.5			
Wrench, hand chain	12 × 2 × 1	1.75			
Wrench, pipe, adjustable, 18 in.	18 × 3 × 0.5	6			
Wrench, ratchet, ⅜ in. drive, metric 8 mm to 18 mm (24 piece)	9.75 × 7.5 × 3	3.5			
Wrench, ratchet, ⅜ in. drive, SAE ⅜ in. to ¾ in. (24 piece)	9.75 × 7.5 × 2	3.5			
Wrench, tire, lug	27.75 × 1 ID	4.5			
Miscellaneous Equipment					
Gauge, air pressure, tires	6.25 × 1 × 0.5	0.5			
Sprinkler, wedges, set	3 × 0.75 × 1	0.5			
Elevator, key	8.25 × 0.25 ID	0.5			
Hooks, hay bail	Hook 10 × 0.5 ID, handle 3 × 4.5 × 0.5	1.5			
Tool, hand, fork, 4 tine	Tines 12 × 8.75 × 0.5, handle 48 × 1.5 ID	3.5			
Wrench, water main, shutoff	8 × 1.5 × 0.5	0.5			
Tool, manhole cover lifter	44.1 × 10.2 × 6.7	35.5			
Pump, portable, water, small gasoline	17.5 × 16 × 19.5	50			

NFPA 1901 (p. 9 of 17)

FIGURE C.1 *Continued*

Copyright National Fire Protection Association
Provided by IHS under license with NFPA
No reproduction or networking permitted without license from IHS
Not for Resale

Equipment Description	Dimensions (in.)	Weight (lb)	Quantity	Total Weight (lb)	Compartment Location
Saw, chain, gasoline 61 cc, w/ 19 in. bar	Engine 16.75 × 9.5 × 11.25, bar 19 × 3.75 × 0.25	19			
Brush, foxtail	8 × 1 ID	0.5			
Intercom, system, w/ four headsets	Junction boxes 6.75 × 5.25 × 2.5, 5.25 × 3.6 × 3.1, 7 × 4.3 × 3.1, 8.25 × 5.75 × 4.75, headset 8.5 × 7.5 × 3	31.5			
MRE	12 × 7.5 × 2.5	2			
Tent, fire shelter	10 × 6 × 3.5	3.5			
Wheel chocks, large	21 × 10.25 × 5.75	22			
Wheel chocks, small	10 × 10.25 × 5.75	11			
Electrical Equipment — Low Voltage					
Battery, cable puller	4 × 2.5 × 0.5	2			
Battery, jumper cables	10 × 12 × 2.5	8			
Flashlight, small, w/ batteries	10.25 × 2.25 ID	1.5			
Lantern, head lamp type	3 × 4 × 2	1.5			
Lanterns, portable, battery powered	11.5 × 4.5 × 6.5	6.5			
Personnel Equipment					
Belt, safety, ladder type	15 × 5 × 1.75	4.5			
Harness, safety	12 × 4 × 4	2.5			
Light, sticks, Cyalume (box)	6 × 6 × 8	1			
Masks, dust, box	8 × 5 × 5	1			
Rope, life line, bail out bag	7.5 × 7.5 × 3.5	2			
Water, canteen, 2 qt	7.5 × 3.5 × 8.5	2			
Water, container, 5 gal, w/ water	20 × 12.5 ID	40			
Water, container, 5 gal, w/o water	20 × 12.5 ID	8			
Personnel Gear					
Clothing, parkas	20 × 30 × 4	3			
Gear, entry suit, fire	34 × 24 × 23	50			
Gloves, disposable, box	10 × 5 × 3	1.5			
Gloves, leather, pair	9 × 4.5 × 0.75	0.5			
Gloves, lineman, rubber	18 × 6 × 1	3			
Gloves, neoprene, 8 in. pair	12 × 5 × 2	1			
Gloves, PVC, 8 in. pair	6.5 × 5.5 × 2	0.5			
Gloves, rubber, nitrile, 8 in. pair	7.5 × 4.5 × 1.25	0.5			
Goggles, safety	6 × 3.5 × 2.5	0.5			
Helmet, hard hats	12.5 × 8 × 7				
Helmet, tool, rescue	10 × 9 × 7	1.5			

NFPA 1901 (p. 10 of 17)

FIGURE C.1 *Continued*

Copyright National Fire Protection Association
Provided by IHS under license with NFPA
No reproduction or networking permitted without license from IHS
Not for Resale

Equipment Description	Dimensions (in.)	Weight (lb)	Quantity	Total Weight (lb)	Compartment Location
SCBA Equipment and Cylinders					
SCBA, alarm, PASS	2 × 3.25 × 1.5	0.5			
SCBA, cylinder, 4500 psi 30 min, spare	22.5 × 7 ID	17			
SCBA, pack, 4500 psi cylinder, w/ PASS and mask	22 × 14 × 7	30.5			
Instruments					
Detector, heat	1 × 1.75 × 6	0.5			
Monitor, carbon monoxide	3.75 × 1.75 × 1	0.5			
Monitor, gas, combustioble	5.75 × 6 × 3.25	2.5			
Monitor, oxygen	2 × 3.25 × 1.25	0.5			
Electrical, voltage tester	3 × 8 × 1.5	2.5			
Detector, gas	8.25 × 3.75 × 3.25	3.5			
Radiation, Geiger counter	5.75 × 2.75 × 1.5	1			
Detector, dosimeter	2.75 × 5 × 1.5	0.5			
Detector, microwave leak	6 × 2.5 × 1.25	1.5			
Kit, sample gathering	21 × 17 × 8.5	23			
Hydraulic Rescue Tools and Equipment					
HRT, cutter, aircraft type	28.2 × 11 × 7.3	39			
HRT, hose, spare 16 ft	2 × 16 ID	8			
HRT, hose, spare 30 ft	3 × 16 ID	16.5			
HRT, manifold block	16 × 8 × 5	15			
HRT, pump, electric, simo	28 × 9.5 × 20.7	176			
HRT, pump, electric, single	22 × 9.5 × 20.7	133			
HRT, pump, gas	22 × 17.5 × 20.7	123			
HRT, ram, long	35 × 3.1 × 7	36.5			
HRT, ram, medium	22 × 3.1 × 7	24.5			
HRT, ram, short	15 × 3.1 × 7	18			
HRT, reel, and hose, 50 ft	25 × 20 × 20	100			
HRT, spreader, large	33.25 × 5.5 × 8.25	62			
HRT, tool, combination	33 × 11 × 6.3	38			
HRT, tool, electric combination	33.5 × 10.2 × 6.8	50			
Hydraulic, tool, Porta-Power, 10 ton	3 × 19 × 5	10.5			
Air Rescue Equipment and Bags					
Air bag, controller	19.5 × 14.5 × 5.5	13			
Air bag, high pressure, 6 × 6	6 × 6 × 1.2	1.5			
Air bag, high pressure, 8 × 8	8 × 8 × 1.2	2.5			
Air bag, high pressure, 15 × 15	15 × 15 × 1	11.5			
Air bag, high pressure, 17 × 17	17 × 17 × 1	12.5			
Air bag, high pressure, 22 × 22	22 × 22 × 1	23			

NFPA 1901 (p. 11 of 17)

FIGURE C.1 ***Continued***

Copyright National Fire Protection Association
Provided by IHS under license with NFPA
No reproduction or networking permitted without license from IHS
Not for Resale

Equipment Description	Dimensions (in.)	Weight (lb)	Quantity	Total Weight (lb)	Compartment Location
Air bag, high pressure, 24 × 24	24 × 24 × 1	26			
Air bag, high pressure, 27 × 27	27 × 27 × 1.2	33.5			
Air bag, high pressure, 30 × 30	31 × 31 × 1.2	41			
Air bag, high pressure, 36 × 36	36 × 36 × 1.2	57			
Air bag, low pressure	27.5 × 27.5 × 2.3	20			
Air bag, pressure regulator	7 × 6 × 4.5	3			
Air chisel, set, w/ air cylinder	26 × 11.5 × 11.5	32			
Air tool, drill	9.5 × 8.5 × 3.5	5			
Air tool, hammer	9.5 × 2.5 ID, 7.75 × 2.25 ID	5.5			
Hose, air, low pressure, 50 ft	22 × 11 × 3	5.5			
Reel, air, low pressure, with 100-ft hose	20.5 × 18 × 19.5	12			
Shoring and Cribbing Equipment — Trench Rescue					
Cribbing, wood, 2 × 4 × 18	1.5 × 3.25 × 18	1.5			
Cribbing, wood, 4 × 4 × 18	3.25 × 3.25 × 18	3.5			
Cribbing, wood, 2 × 4 × 36	1.5 × 3.25 × 36	3			
Wedges, wood, 4 × 4 × 18	3.25 × 3.25 × 18	1.5			
Water Rescue Equipment					
Harness, rescue, body type	16 × 8 × 8	5			
Harness, rescue, chest type	6 × 9 × 2	1.5			
Life preserver, personal flotation device	21 × 15 × 3	2.5			
Jacks, Come-along, Block and Tackle, Chains					
Jack, mechanical, long highlift	48 × 8 × 2	30			
Jack, hydraulic, bottle type 5 ton	4.5 × 5 × 9	12			
Jack, hydraulic, bottle type 12 ton	5.5 × 5.5 × 9.5	18			
Jack, hydraulic, bottle type 20 ton	6 × 6.5 × 11	31			
Plate, outrigger	24 × 24 × .5	30			
Pulley, swivel side	6 × 4 × 1.5	1			
Tool, figure 8	7 × 6 × 0.75	1.5			
Chain, steel, 6 ft with hooks	11 × 7 × 3.5	16.5			
Chain, steel, 10 ft with hooks	14 × 7.5 × 4	21.5			
Chain, shortener	8.75 × 2.5 × 0.75	3			
Chain, shackle	6 × 4 × 1.5	1			
Chain, steel, 20 ft with hooks	9.5 × 5.75 × 5.25	34			
Chain, shackle kit	21 × 14 × 5	13.5			
Winch, manual, come along	18.5 × 7 × 5	12.5			
Straps, extrication, w/ quick release buckles	7 × 5 × 2	2			

NFPA 1901 (p. 12 of 17)

FIGURE C.1 *Continued*

Copyright National Fire Protection Association
Provided by IHS under license with NFPA
No reproduction or networking permitted without license from IHS
Not for Resale

Equipment Description	Dimensions (in.)	Weight (lb)	Quantity	Total Weight (lb)	Compartment Location
Rope Rescue Equipment — High Angle Rescue					
Carabiner, locking	4.4 × 4.4 × 0.5	0.5			
Harness, body	16 × 8 × 8	5			
Harness, chest	6 × 9 × 2	1.5			
Rope, ½ in., Kernmantle, 200 ft, water rescue	11 × 11 ID	22			
Rope, ½ in., nylon, 200 ft	27 × 9 ID	12.5			
Rope, ⅜ in., nylon, 200 ft	26 × 8 ID	9.5			
Rope, ⅝ in., Kernmantle, 200 ft, water rescue	29 × 12 ID	26			
Rope, 50 ft, w/ throw bag	15 × 6 ID	4.5			
Rope, ascender device	2.5 × 9 × 4.5	1.5			
Rope, descender device	16 × 3 × 1	2			
Rope, nylon, ½ in. x 100 ft utility	16.5 × 10.5 ID	22.5			
Rope, pulley block, double	5 × 9 × 3	2			
Sling, nylon	48 × 1 × 0.5	1			
Cutting Equipment					
Cutter, arc air	17 × 18 × 6.5	42			
Cutter, pedal	8.5 × 2.75 × 3	6			
Torch, cutting, acetylene	22.5 × 12.5 × 10	32.5			
Hazmat-Related Items					
Absorbent, oil dry	36 × 24 × 10	15			
Absorbent, pads, 100	17 × 19 × 18	19			
Absorbent, Vermiculite	12 × 12 × 12	7.5			
Broom, Teflon	Broom 36 × 4.25 × 4 Handle 58.5 × 1 ID	4			
Bucket, plastic, 5 gal	14.25 × 12 ID	2			
Caulking, gun	22.5 × 2.5 ID Handle 4.25 × 4.25 × 0.75	2			
Drum, salvage, 8 gal	16.75 × 14 ID	12			
Drum, salvage, 10 gal	16.75 × 14.5 ID	13.5			
Drum, salvage, 110 gal	31 ID × 45	53			
Drum, salvage, 20 gal	21.75 ID × 16.75	15.5			
Drum, salvage, 30 gal	21.75 ID × 28.25	17.5			
Drum, salvage, 55 gal	25 ID × 37.5	23			
Drum, salvage, 85 gal	31 ID × 43.25	47			
Drum, sling	57 × 2 × 0.5	21			
Drum, tank	33.75 × 23.1 ID	81			
Hazmat, tank kit	33.75 × 23.1 ID	75			

NFPA 1901 (p. 13 of 17)

FIGURE C.1 *Continued*

Copyright National Fire Protection Association
Provided by IHS under license with NFPA
No reproduction or networking permitted without license from IHS
Not for Resale

Equipment Description	Dimensions (in.)	Weight (lb)	Quantity	Total Weight (lb)	Compartment Location
Neutralizer, acid, 1 gal	12.25 ID × 15	50			
Neutralizer, caustic, 1 gal	12.25 ID × 15	42			
Shovel, nonsparking	Shovel 10 × 11 × 2, handle 28 × 1 ID	2			
Shovel, polypropylene	Shovel 10.5 × 14 × 2, handle 24.5 × 1 ID	3			
Shower, decontamination	21 × 21 × 40	4			
Squeegees, Teflon	Squeegee 3 × 2.25 × 1, handle 72 × 1 ID	3.5			
Suit, Level A hazmat	34 × 21 × 8	21			
Suit, Level B hazmat	14 × 13 × 9	3			
Suit, Level C hazmat	13 × 6.5 × 1.75	1			
Towels, bath, terry, 20 × 36	16 × 6 × 3.75	1			
Stretcher and Patient Control Equipment					
Back board, long	71 × 17.75 × 1.5	17.5			
Back board, short	32 × 16 × 0.75	3			
Body, pouch	17 × 14 × 1	6.5			
Extraction device, KED	34 × 11 × 5	6.5			
Neck brace, C-collar	23 × 10 × 6	3.5			
Stretcher, folding	39.5 × 24.25 × 9.25	60			
Stretcher, scoop	73 × 16.75 × 2	21			
Stretcher, stokes basket	80.5 × 22 × 8	38			
Stretcher, stokes, 4-point attachment bridle	4 × 8 × 5	3.5			
Medical and EMS Equipment					
Blanket, disposable	9.5 × 6 × 0.75	0.5			
Blanket, fire, w/ bag	20 × 19 × 2	5.5			
Blanket, wool	19 × 13 × 2.5	4.5			
Defibrilator, cardiac, 12 lead monitor	23.5 × 9.5 × 13	24			
Medical, air way kit	13.75 × 5 × 4.5	4			
Medical, ambulance bag	22 × 13.5 × 8.5	9			
Medical, burn kit	13 × 9 × 5	2.5			
Medical, drug bag	19.25 × 10.5 × 12	24			
Medical, first aid kit, 25 unit	10.5 × 7.5 × 2	5			
Medical, OB kit	9.5 × 7.5 × 3.5	1			
Medical, rescue breather	4.75 × 4 × 2	0.5			
Medical, snake bite kit	5 × 3 × 1.5	0.5			
Medical, splints	36 × 14 × 5	4			
Medical, squeeze bag mask	8.5 × 5.5 × 5.5	0.5			
Medical, suction, portable	15 × 8.25 × 8.75	12			

NFPA 1901 (p. 14 of 17)

FIGURE C.1 *Continued*

Copyright National Fire Protection Association
Provided by IHS under license with NFPA
No reproduction or networking permitted without license from IHS
Not for Resale

Equipment Description	Dimensions (in.)	Weight (lb)	Quantity	Total Weight (lb)	Compartment Location
Medical, trauma kit	27 × 19 × 10	14.5			
Medical, V-vac	13 × 7 × 5	1			
Oxygen, cylinders, D	4.25 ID × 19.5	8			
Resuscitation, respirator, oxygen	9 ID × 4.5	1.5			
Electrical Equipment					
Cord, electric, 50 ft #12/3	17 × 5 × 2.75	2			
Electrical, "hot stick"	20.5 × 1.75 ID	1.25			
Electrical, pigtail/adapter	1.5 ID × 8	1			
Generator, portable	25.8 × 18.9 × 19.1	147			
Junction box, electric, distribution	8.5 × 6.25 × 7.5	5.5			
Light, flood, tripod	72 × 4.5 ID	30			
Light, portable, 500 watt	13 × 8.5 × 13	9.5			
Reel, electric, portable with cord	20 × 16 × 9	27			
Saw, electric, Sawzall	18 × 6 × 3	8.25			
Gasoline, Engine, Spare Parts (Small Engine and Tools)					
Container, safety can, 2.5 gal	11.5 × 11.5 ID	6			
Electrical, tape	0.75 × 3.5 ID	0.5			
Engine, air filter	3.25 × 4.5 ID	0.5			
Engine, fuel filter	2.75 × 1 ID	0.5			
Engine, oil filter	3.25 × 3 ID	0.5			
Engine, oil, 1 quart	8.5 × 4.25 × 2.25	2			
Engine, spare O-rings, 10	1.25 × 2.5 ID	0.5			
Engine, spark plug	2.75 × 0.75 ID	0.5			
Funnel, plastic	9 × 5 ID	0.5			
Rags, mechanics	16.75 × 11.5 × 8.25	5			
Saw, blade, extra 10 blades	12.25 × 0.5 × 0.5	0.5			
Saw, wood, extra chain (gas)	10.5 × 2 × 0.5	0.5			
Sprayer, Silicone	8.5 × 2.5 ID	41			
Nonsparking Tools					
Tools, nonsparking, drum wrench	15 × 2.5 × 2.25	3			
Tools, nonsparking, hammer	Head 3 × 1 ID, handle 12 × 1 ID	1.5			
Tools, nonsparking, kit	14.25 × 12. ID	19			
Tools, nonsparking, knife	6 × 1.25 × 0.75	0.5			
Tools, nonsparking, pipe wrench	8 × 2.5 × 0.75	5			

NFPA 1901 (p. 15 of 17)

FIGURE C.1 *Continued*

Copyright National Fire Protection Association
Provided by IHS under license with NFPA
No reproduction or networking permitted without license from IHS
Not for Resale

Equipment Description	Dimensions (in.)	Weight (lb)	Quantity	Total Weight (lb)	Compartment Location
Tools, nonsparking, pliers	8 × 1 × 0.5	0.5			
Tools, nonsparking, putty knife	9 × 3 × 1	1.5			
Tools, nonsparking, screw driver, Phillips	7.5 × 1 ID	0.5			
Tools, nonsparking, screw driver, straight	7.5 × 1 ID	0.5			
Tools, nonsparking, wrench, adjustable	12 × 1.75 × 0.5	1.5			
Special Wildland Equipment					
Axe, brush	Head 9 × 5 × 1, handle 36 × 1.5 ID	7			
Broom, fire swatter	Swatter 11.5 × 15 × 0.25, handle 60 × 1.25 ID	5.5			
Extinguisher, water pump can	17 × 15 × 7	14			
Pick, clay	Head 16.5 × 3 × 0.5, handle 1.5 ID × 36	9			
Rake, fire	Rake 12 × 3.5 × 1, handle 60 × 1.75 ID	4.5			
Tool, Pulaski	Head 13.25 × 4.75 × 1, handle 33.25 × 1.5	6			
Salvage Equipment					
Broom, household	Broom 11 × 11 × 1.75, handle 46 × 1 ID	1.5			
Broom, push, long handle	Broom 19 × 4 × 3, handle 50.5 × 1 ID	4.5			
Bucket, mop, w/ ringer	17.25 × 16 × 21.5	18.5			
Mop, long handle	Mop 21 × 7.75 × 2, handle 60.25 × 1 ID	5.5			
Nails, assorted, can	6 × 5 × 5	5			
Plastic, roll, 100 ft × 20 ft	48 × 10 ID	11			
Pump, electric, sump	11 × 7 ID	19			
Squeegee, long handle	Squeegee 3 × 2.25 × 1, handle 72 × 1 ID	4			
Stapler, construction type	8 × 6 × 0.75	2			
Tape, duct	2 × 7 ID	2			
Tarp, floor runner	36 × 12 ID	22			
Tarp, salvage covers	9 ID × 30	9			
Vacuum, water	27 × 15.75 ID	18.5			
Reference and Communication					
Binoculars, eye	4.4 × 4.6 × 1.8	1.5			
Book, CHRIS manual	11.5 × 11.25 × 6.5	16			
Book, DOT reference	7.5 × 5.25 × 0.75	1			

NFPA 1901 (p. 16 of 17)

FIGURE C.1 *Continued*

Copyright National Fire Protection Association
Provided by IHS under license with NFPA
No reproduction or networking permitted without license from IHS
Not for Resale

Equipment Description	Dimensions (in.)	Weight (lb)	Quantity	Total Weight (lb)	Compartment Location
Book, map	11.5 × 9.5 × 2.75	6			
Book, medical guide	11 × 9 × 0.5	1			
Book, NFPA, *Fire Protection Guide to Hazardous Materials*	14 × 9 × 1.5	4			
Book, phone	10.75 × 9 × 2	4.5			
Book, Association of American Railroads, *Emergency Action Guide*	11 × 8.5 × 2	2.5			
Camera, Polaroid or digital	6.8 × 4.2 × 6.4	1.5			
Clipboard	13.75 × 9 × 1.5	2			
Computer, desktop	25 × 17.5 × 16.25	66			
Computer, laptop	11 × 13 × 1.6	8			
Fax machine	15 × 14.25 × 15.75	24.5			
Megaphone, bull horn	14.5 × 11.5 × 9	3.5			
Radio, hand	7.5 × 2.25 × 1.25	1.5			
Telephone, cell	7.75 × 2 × 2.75	2.5			

NFPA 1901 (p. 17 of 17)

FIGURE C.1 *Continued*

Annex D Guidelines for First Line and Reserve Apparatus

This annex is not a part of the requirements of this NFPA document but is included for informational purposes only.

D.1 Brief Summary. To maximize fire fighter capabilities and minimize risk of injuries, it is important that fire apparatus be equipped with the latest safety features and operating capabilities. In the last 10 to 15 years, much progress has been made in upgrading functional capabilities and improving the safety features of fire apparatus. Apparatus built prior to 1991 might have few of the safety upgrades required by the 1991 and subsequent editions of the NFPA fire department apparatus standards or the equivalent Underwriters' Laboratories of Canada (ULC) standards. Because the changes, upgrades, and fine tuning to NFPA 1901 since 1991 have been truly significant, especially in the area of safety, fire departments should seriously consider the value (or risk) to firefighters by keeping pre-1991 fire apparatus in first-line service.

The 1991 edition of the NFPA fire department apparatus standards included, among many other things, requirements for fully enclosed riding areas, stronger aerial ladders, auxiliary braking systems, reflective striping, improved warning lights, and no roof-mounted audible warning devices. The 1991 editions have been recognized as the benchmark from which the new, improved apparatus have evolved. It is recommended that only apparatus that meet the 1991 or later editions of the NFPA apparatus standards or that are refurbished in accordance with NFPA 1912 be permitted to operate in first-line service, to ensure that the latest improvements and upgrades are available for the firefighters.

It is recommended that apparatus built to meet the 1979 or 1985 edition of NFPA 1901 (or equivalent ULC standards) be placed in reserve status and upgraded to incorporate as many features of the post-1991 fire apparatus as possible *(see Section D.3)*. Apparatus not built to NFPA apparatus standards or manufactured prior to 1979 (over 24 years old) should be considered for upgrading or replacement.

D.2 Discussion. It is a generally accepted fact that fire apparatus, like all types of mechanical devices, have a finite life. How long that is depends on many factors. Some of those factors are mileage, quality of the preventative maintenance program, quality of the driver training program and rules enforcement, quality of the original builder and components, availability of parts, and custom or commercial chassis to name a few. In the fire service, there are fire apparatus with 8 to 10 years of service that are just plain worn out. There are also fire apparatus that were built with quality components, that had excellent maintenance, and that have responded to a minimum number of runs that are still serviceable after 20 years. Most would agree that the quality and timeliness of maintenance are perhaps the most significant factors in determining how well a fire apparatus ages.

Prior to 1991, the fire department apparatus standards were basically "reactive standards." That is to say, if something proved out in field use for a few years, it might have been suggested for inclusion in NFPA 1901. It was a very basic standard. After forming a Safety Task Group within the Fire Department Apparatus Committee in the late 1980s and looking at the current status of the standard, the Committee decided to become proactive and to greatly enhance the value of the standard for the fire service.

Copyright National Fire Protection Association
Provided by IHS under license with NFPA
No reproduction or networking permitted without license from IHS
Not for Resale

The completely revised 1991 edition was the result of the efforts of many task groups and the full committee's strong desire to make the automotive fire apparatus standards more "safety oriented and user friendly." In 1991, four standards were actually issued: NFPA 1901, *Standard for Automotive Fire Apparatus*; NFPA 1902, *Initial Attack Fire Apparatus;* NFPA 1903, *Mobile Water Supply Fire Apparatus*; and NFPA 1904, *Aerial Ladder and Elevating Platform Fire Apparatus*.

Contained within the 1991 editions of the fire department apparatus standards were requirements for such items as increased battery capacity to ensure starting under most conditions; intersection lights for increased visibility; removal of all roof-mounted audible warning devices to reduce hearing problems; a flashing light in the cab to warn if a cab or body door is open; a backup alarm; an automatic transmission to make it easier to drive (unless the purchaser had a specific reason for a manual transmission); fully enclosed riding areas with reduced noise (dBA) levels to keep the crew members safe, warm (or cool), and informed as to what is happening; seats and seat belts for all crew members riding on the apparatus; failsafe door handles so the sleeve of a coat will not inadvertently catch a handle and open a door; and signs requiring everyone to be seated and belted.

In the pump area, the standard specified that 3 in. (76 mm) or larger valves be "slow close," that caps be tested to 500 psi (3400 kPa), that an intake relief valve be provided to help manage incoming pressure, that 30 degree sweep elbows be provided on the discharges to eliminate hose kinking, and that all 3 in. and larger discharges be eliminated from the pump panel to reduce the possibility of injuries to the pump operator.

In the body area, the minimum step surface size and load-carrying capabilities were increased, handrails were required to be slip resistant, and reflective striping was required on all four sides of the apparatus. Electrical system requirements for line voltage were upgraded to require the use of "listed" components that were grounded.

Many requirements were added to increase the operating capabilities of all aerial devices. For aerial ladders, the minimum design strength of the rungs was increased, a height requirement for the hand rails was specified, a minimum load carrying requirement for folding steps was specified, and the aerial ladder had to have a minimum carrying capacity of 250 lb (114 kg) at the tip at zero degrees elevation at maximum extension. Where a water tower was equipped with a ladder, the same requirements that applied to an aerial ladder were required of the ladder on the water tower.

The carrying capacity of elevating platforms at zero degrees full extension was raised to 750 lb (340 kg). Elevating platforms were also required to have handrails, breathing air available in the platform (with low air warning capability) for at least two firefighters, and a water curtain cooling system under the platform.

All aerial devices had to be capable of supporting a static load of 1½ times their rated capacity in any position. A requirement for a stabilizer movement alarm and reflective striping with warning lights was added. Interlocks to prevent inadvertent movement to an unsupported side and to prevent raising the aerial device prior to the stabilizers being deployed were specified. One hundred percent nondestructive tests became a requirement with increased safety and strength of materials also being required.

All this happened in just the 1991 editions of the NFPA apparatus standards. Subsequent revisions in 1996 and 1999 further enhanced the safety and operating characteristics of all the apparatus. For example, the 1999 edition included chapters on quints and mobile foam apparatus, further defined slip resistance of stepping and walking surfaces, called for better mounting of equipment in the driving and crew compartment, required predelivery testing of foam systems, and specified that fill stations for breathing-air cylinders be designed to totally contain a rupturing cylinder.

D.3 Upgrading or Refurbishing Fire Apparatus. Any apparatus, whether in first-line or reserve service, should be upgraded as necessary to ensure that the following features are included as a minimum:

(1) Fully enclosed seating is provided for all members riding on the fire apparatus.
(2) Warning lights meet the current standard.
(3) Reflective striping meets the current standard.
(4) Slip resistance of walking surfaces and handrails meets the current standard.
(5) A low voltage electrical system load manager is installed if the total continuous load exceeds the alternator output.
(6) Where the GVWR is 36,000 lb (16,000 kg) or more, an auxiliary braking system is installed and operating correctly.
(7) Ground and step lights meet the current standard.
(8) Noise levels in the driving and crew compartment(s) meet the current standard.
(9) Engine belts, fuel lines, and filters have been replaced in accordance with the manufacturers' maintenance schedule(s).
(10) Brakes, brake lines, and wheel seals have been replaced or serviced in accordance with the manufacturers' maintenance schedule.
(11) Tires and suspension are in serviceable condition.
(12) All horns and sirens are relocated from the roof to a position as low and as far forward as possible.
(13) Seat belts are available for every seat and are new or in serviceable condition.
(14) Sign plates are present stating no riding on open areas.
(15) A complete weight analysis shows the fire apparatus is not over individual axle or total GVW ratings.
(16) The fire pump meets or exceeds its original pump rating.
(17) Alternator output meets its rating.
(18) Water tank and baffles are not corroded or distorted.
(19) A transmission shift pump interlock is present and working properly on vehicles equipped with an automatic transmission.
(20) All loose equipment in the driving and crew areas is securely mounted to prevent its movement in case of an accident.
(21) The radiator has been serviced in accordance with the manufacturers' maintenance schedule and all cooling system hoses are new or in serviceable condition.
(22) If so equipped, the generator and line voltage accessories have been tested and meet the current standard.
(23) If equipped with an aerial device, a complete test to original specifications has been conducted and certified by a certified testing laboratory.

Fire department administrators and fire chiefs should exercise special care when evaluating the cost of refurbishing or updating an apparatus versus the cost of a new fire apparatus. A thorough cost-benefit analysis of the "value" of upgrading or refurbishing a fire apparatus should be conducted. In many instances, it will be found that refurbishing costs will greatly exceed the current value of similar apparatus.

Apparatus not built to NFPA apparatus standards or manufactured prior to 1979 (over 24 years old) should be considered for upgrading or replacement.

Copyright National Fire Protection Association
Provided by IHS under license with NFPA
No reproduction or networking permitted without license from IHS
Not for Resale

Annex E History of NFPA 1901

This annex is not a part of the requirements of this NFPA document but is included for informational purposes only.

E.1 History of Specification. A report of the NFPA Committee on Fire Engines adopted at the 1906 NFPA Annual Meeting included many of the provisions and test procedures since followed in standards for fire department pumping apparatus.

In 1911, at the convention of the International Association of Fire Engineers the Committee of Exhibits conducted some performance tests on automobile pumping engines. The following year, with the assistance of engineers of the National Board of Fire Underwriters, tests were conducted on pumping engines discharging under net pump pressures of 120 psi, 200 psi, and 250 psi. By the 1913 convention of the International Association of Fire Engineers, the committee had developed a standard test procedure of specified duration.

The first national specification on municipal fire apparatus was NFPA 19, *Automobile Fire Apparatus, Suggested Specifications for Combination Pumping Engine and Hose Wagon,* which was adopted by the NFPA in 1914. This was followed in 1916 by specifications adopted by NFPA covering an automobile combination chemical and hose wagon and an automobile service ladder truck. These specifications received the endorsement of the Committee on Fire Department Engineering of the International Association of Fire Engineers and were adopted and published in 1920 by the National Board of Fire Underwriters. The work of the original NFPA Committee on Automobile Apparatus was suspended in 1920.

A new NFPA Committee on Municipal Fire Apparatus was organized in 1938, and NFPA adopted revised editions of NFPA 19 in 1938, 1939, and 1942. In 1948, the present Committee on Fire Department Equipment was organized. The scope of the committee was broadened to include fire department tools and appliances as well as motorized fire apparatus for both municipal and rural service. There were numerous revisions of the standard to keep it abreast of current practice, and editions were issued in 1949, 1950, 1951, 1952, 1954, 1955, 1956, 1957, 1958, 1960, 1961, 1963, and 1965.

The work of the Committee on Municipal Fire Apparatus has been an outstanding example of cooperation among the various fire service organizations concerned with standards for fire department apparatus and equipment. A chief engineer of the former National Board of Fire Underwriters was chairman of the original committee. A significant contribution of the National Board for over half a century was the listing of thousands of pump and engine combinations that met the specified pumper performance requirements. Recognition is also due the various insurance rating and inspection bureaus, most of which are now part of the Insurance Services Office, whose representatives have witnessed the acceptance tests of apparatus built under these specifications.

The International Association of Fire Chiefs has actively participated in this work since 1912. A fire chief has served as chairman of the committee responsible for these specifications since 1938. In 1952, the Technical Committee of the Fire Apparatus Manufacturers Association was reactivated and has made significant contributions to each subsequent edition of these specifications.

In 1965, the American Insurance Association (AIA), which replaced the National Board of Fire Underwriters, decided to terminate its field testing by rating bureaus and recordkeeping by the AIA. The Fire Department Equipment Committee in conjunction with Underwriters Laboratories Inc. (UL) and the Technical Committee of the Fire Apparatus Manufacturers Association worked with AIA to transfer the testing program to UL. This program appeared in the standard in the 1966 edition and has been an accepted testing program.

Further revisions were completed and editions issued in 1967, 1968, 1969, 1970, 1971, and 1973. In 1975, the numerical designation of the document was changed to NFPA 1901 in a general renumbering of public fire protection standards, and the name was changed to *Standard on Automotive Fire Apparatus.* Partial revisions were made, and new editions were issued in 1979 and 1985.

In 1991, NFPA 1901 was extensively rewritten and split into four documents. These documents covered pumper fire apparatus (NFPA 1901), initial attack fire apparatus (NFPA 1902), mobile water supply fire apparatus (NFPA 1903), and aerial ladder and elevating platform fire apparatus (NFPA 1904).

Significant changes to the 1991 edition included requiring total enclosure of driving and crew areas, limiting the maximum stepping height, requiring access handrails, and requiring additional warning lights and reflective striping. The minimum pump size for a fire pump on a pumper was raised to 750 gpm, and the minimum water tank size was set at 500 gal. The documents also addressed line voltage electrical systems and foam systems for the first time.

The test and delivery data requirements were updated to ensure that more of the performance requirements of the standards were tested as part of the delivery process and that proper documentation was provided to the purchaser. Appendix A was expanded to provide more discussion of the requirements in the standard, and a new appendix was added to provide a form that a purchaser could use to define the information needed by the contractor to properly design, build, and deliver the fire apparatus.

Recognizing that much apparatus is multifunctional and that the process of maintaining separate documents for the traditional types of fire apparatus did not always address the need for nontraditional types or use of fire apparatus, the committee combined the four documents back into a single fire apparatus standard for the 1996 edition and organized the standard to cover not only the traditional types of fire apparatus but also multifunctional and nontraditional use apparatus. New chapters were added to cover compressed air foam systems, air systems, command and communication areas, and winches.

Many requirements were added throughout the document to improve the safety for fire fighters using the apparatus. These requirements included limiting the height of controls to 72 in. (2 m) above the standing position of the operator, requiring equipment in driving and crew areas to be securely fastened or in a compartment, increasing work lighting around the apparatus, and better grouping of pump controls to keep the operator away from the intake and discharge outlets. The low voltage electrical chapter was totally rewritten to require load analysis and load management if the total connected load cannot be supplied by the vehicle's alternator. The requirements for warning lights were also rewritten to provide for different lighting when "calling for right-of-way" versus "blocking right-of-way." Requirements for warning lights were increased to provide more visibility of the fire apparatus.

New requirements were added for powered equipment racks, SCBA and cylinder storage, pump and plumbing access, and slip-on fire-fighting modules. The baffling requirements for water tanks were changed to allow either containment or

Copyright National Fire Protection Association
Provided by IHS under license with NFPA
No reproduction or networking permitted without license from IHS
Not for Resale

dynamic baffling to be used. As a fundamental change in the aerial device chapter, water towers were redefined as aerial devices with elevated stream capability only. If water towers have a ladder on them, they are considered aerial ladders. Requirements were also added for secondary controls at the tip of an aerial ladder if such controls are provided.

The 1999 edition was a general update of the 1996 edition. Two new chapters were added, one covering the requirements for quint fire apparatus, the other covering the requirements for mobile foam fire apparatus. NFPA 11C, *Standard for Mobile Foam Apparatus*, which was the basis for the chapter on mobile foam fire apparatus, was withdrawn.

Among the significant changes were the addition of a coefficient of friction for steps and walkways, the establishment of 10,000 GVWR chassis size as the smallest fire apparatus covered by the standard, the definition of the ambient temperatures the apparatus is to operate in, the allowance of more versatility in the selection of ground ladders for fire apparatus, the allowance of more flexibility in the placement of warning lights on the sides of fire apparatus, and the addition of a requirement that SCBA air refill stations on fire apparatus be fully enclosed so as to contain the fragments if a cylinder ruptures during refilling.

Annex F Informational References

F.1 Referenced Publications. The following documents or portions thereof are referenced within this standard for informational purposes only and are thus not part of the requirements of this document unless also listed in Chapter 2.

F.1.1 NFPA Publications. National Fire Protection Association, 1 Batterymarch Park, P.O. Box 9101, Quincy, MA 02269-9101.

Fire Protection Guide to Hazardous Materials, 13th edition, 2001.

NFPA 11, *Standard for Low-, Medium-, and High-Expansion Foam*, 2002 edition.

NFPA 70, *National Electrical Code®*, 2002 edition.

NFPA 70B, *Recommended Practice for Electrical Equipment Maintenance*, 2002 edition.

NFPA 1150, *Standard on Fire-Fighting Foam Chemicals for Class A Fuels in Rural, Suburban, and Vegetated Areas*, 1999 edition.

NFPA 1500, *Standard on Fire Department Occupational Safety and Health Program*, 2002 edition.

NFPA 1906, *Standard for Wildland Fire Apparatus*, 2001 edition.

NFPA 1911, *Standard for Service Tests of Fire Pump Systems on Fire Apparatus*, 2002 edition.

NFPA 1912, *Standard for Fire Apparatus Refurbishing*, 2001 edition.

NFPA 1931, *Standard on Design of and Design Verification Tests for Fire Department Ground Ladders*, 1999 edition.

NFPA 1981, *Standard on Open-Circuit Self-Contained Breathing Apparatus for Fire and Emergency Services*, 2002 edition.

NFPA 1983, *Standard on Fire Service Life Safety Rope and System Components*, 2001 edition.

NFPA 1991, *Standard on Vapor-Protective Ensembles for Hazardous Materials Emergencies*, 2000 edition.

NFPA 1992, *Standard on Liquid Splash-Protective Ensembles and Clothing for Hazardous Materials Emergencies*, 2000 edition.

F.1.2 Other Publications.

F.1.2.1 Association of American Railroads Publication. Association of American Railroads, 50 F Street, NW, Washington, DC 20001.

Emergency Action Guide, 2002.

F.1.2.2 ISO Publication. International Standards Organization, 1 rue de Varembé, Case Postale 56, CH-1211 Geneve 20, Switzerland.

ISO 3046-1, *Reciprocating internal combustion engines — Performance — Part 1: Declarations of power, fuel and lubricating oil consumptions, and test methods — Additional requirements for engines for general use*, 2002.

F.1.2.3 NEMA Publications. National Electrical Manufacturers Association, 1300 North 17th Street, Suite 1847, Rosslyn, VA 22209.

MG 1, *Motors and Generators*, 1998

WD 6, *Wiring Devices — Dimensional Requirements,* 1997.

F.1.2.4 Parker Hannifin, Racor Division Publication. Parker Hannifin, Racor Division, Attn: Dan Haggard, 805 West Street, Holly Springs, MS 38634.

LF 1093-90, *Ember Separation Test Procedure*, January 2003.

F.1.2.5 SAE Publications. Society of Automotive Engineers, 400 Commonwealth Drive, Warrendale, PA 15096.

SAE J551/2, *Test Limits and Methods of Measurement of Radio Disturbance Characteristics of Vehicles, Motorboats, and Spark-Ignited Engine-Driven Devices*, 1994.

SAE J706, *Rating of Winches*, 1999.

SAE J826, *Devices for Use in Defining and Measuring Vehicle Seating Accommodation*, 1995.

SAE J1349, *Engine Power Test Code-Spark Ignition and Compression Ignition-Net Power Rating*, 1995.

SAE J1849, *Emergency Vehicle Sirens,* 1995.

F.1.2.6 U.S. Coast Guard Publication. U.S. Coast Guard, Department of Transportation, Washington, DC 20241.

Chemical Hazard Response Information System (CHRIS), Volumes 1–3, Hazardous Chemical Data, 1992.

F.1.2.7 U.S. Government Publication. U.S. Government Printing Office, Washington, DC 20402.

U.S. DOT, *North American Emergency Response Guidebook,* 2000.

F.2 Informational References. (Reserved)

F.3 References for Extracts. The following documents are listed here to provide reference information, including title and edition, for extracts given throughout this standard as indicated by a reference in brackets [ ] following a section or paragraph. These documents are not a part of the requirements of this document unless also listed in Chapter 2 for other reasons.

NFPA 10, *Standard for Portable Fire Extinguishers*, 2002 edition.

NFPA 70, *National Electrical Code®*, 2002 edition.

NFPA 1451, *Standard for a Fire Service Vehicle Operations Training Program*, 2002 edition.

NFPA 1989, *Standard on Breathing Air Quality for Fire and Emergency Services Respiratory Protection*, 2003 edition.

Copyright National Fire Protection Association
Provided by IHS under license with NFPA
No reproduction or networking permitted without license from IHS
Not for Resale

Index

© 2003 National Fire Protection Association. All Rights Reserved.

The copyright in this index is separate and distinct from the copyright in the document that it indexes. The licensing provisions set forth for the document are not applicable to this index. This index may not be reproduced in whole or in part by any means without the express written permission of NFPA.

-A-

Acceptance 4.4.2
Definition 3.3.1
Acceptance tests 4.17, A.4.17.1
Definition 3.3.2
Access
Power source 23.4.4
Pump and plumbing 15.6, A.15.6.5
Access handrails 15.8, A.15.8.4
Accessible, readily ..... *see* Readily accessible
Active horizontal angles of light emission (definition) 3.3.3
Adapters ..... 5.8.3, 6.7.3, 7.7.3.1(12)
Aerial fire apparatus ..... 8.8.3.1 to 8.8.3.3, A.8.8.2(4)
Fire pumps 16.6.1.2, 16.6.8.2, 16.6.10, 16.6.11
Industrial supply pump discharge outlets 18.7.2.2, 18.7.4.1, A.18.7.2.2
Mobile foam fire apparatus 11.9.3
Quint fire apparatus 9.8.3
Aerial devices ..... 8.2, Chap. 20
Aerial ladder requirements ..... 20.2 to 20.6, A.20.2 to A.20.6
Contractor's documentation ... 4.19.1(1)(q), 4.19.1(8), 4.19.1(9)
Control devices 20.17, A.20.17.5
Definition 3.3.4
Elevating platform requirements ..... 20.7 to 20.12, A.20.9.2.1, A.20.10.1, A.20.10.3.1, A.20.12
Fire pump discharge outlets 16.7.1.1
Hydraulic system 20.18.8, 20.18.10, 20.19, A.20.19.7
Mobile foam fire apparatus 11.3, 11.9.3.2
Pumper fire apparatus 5.3, 5.8.3.3
Purchasing specifications ..... Fig. B.1.1
Quality control 20.22
Quint fire apparatus 9.3
Requirements 4.5.5
Signs 20.23
Stabilization and stability tests 4.17.2, 20.21, 20.24.2, A.20.21.1, A.20.24.2.7
Structure 20.20, A.20.20.1
Tests ..... 4.17.2, 20.22.2, 20.22.5, 20.24, 20.25, A.20.24.2.7, A.20.25, D.3(23)
Water tower requirements ..... 20.13 to 20.16
Aerial fire apparatus ..... 4.2.1(4), Chap. 8
Definition 3.3.5
Requirements ..... Table 4.2.2
Tractor-drawn, fifth wheel type 12.3.2.6
Aerial ladders 20.2, A.20.2.13
Definition 3.3.6
Elevation 20.5.1
Extension 20.5.3
Operating mechanisms 20.5, A.20.5.2.1, A.20.5.4
Operating position 20.4, A.20.4.3.1
Purchasing specifications ..... Fig. B.1.1
Rated capacity 20.3, A.20.3.4
Rotation 20.5.2, A.20.5.2.1
Water delivery system 20.6, A.20.6
Air
Breathing (definition) ..... 3.3.27 *see also* Breathing-air systems
Utility (definition) ..... 3.3.172 *see also* Utility air systems
Air control panel 25.7, 25.8
Definition 3.3.7
Air hose 25.2.8, 25.11, A.25.11
Low pressure breathing 25.11.5, A.25.11.5
Purchasing specifications ..... Fig. B.1.1
Air hose reels 25.10, A.25.10
Air supply to 25.10.6
Installation 25.10.9
Low pressure breathing 25.10.10, A.25.10.10
Air quality monitors 25.4.7.1
Definition 3.3.8
Air systems ..... 4.5.10, Chap. 25; *see also* Air hose; Air hose reels; Breathing-air systems; Compressed air foam systems (CAFS); Utility air systems
Assembly and installation practices 25.2.5
Booster supplied ..... *see* Booster supplied air systems
Compressor supplied systems 25.2.1
Controls 25.9.2
Corrosion resistance 25.2.4
Engine 12.2.4, A.12.2.4.1
Hot surfaces 25.2.5.2
Humidity, effect of 25.2.3
Initial delivery 25.15
Instructions 25.2.11.3
Labels and plates 25.2.11, A.25.2.11.6
Locking devices 25.2.5.4
Maintainability 25.2.10
Manuals 25.2.12
Piping 25.2.7
Purchasing specifications ..... Fig. B.1.1
Regulation of air supply 25.7
Storage ..... 25.2.1 to 25.2.3, A.25.2.1
Storage of air (air tanks) 25.5, A.25.5
Temperature for operation and storage 25.2.1, A.25.2.1
Tests 25.14, A.25.14
Training and instruction 25.2.13, A.25.2.13.1, A.25.2.13.2
Tubing 4.11, A.4.11.1
Air tanks 25.5, A.25.5
Definition 3.3.9
Air truck (definition) 3.3.10
Alarms ..... *see* Audible warning devices; Back-up alarms
Alternator performance tests 13.14.3.3, 13.14.3.4
Alternators, belt-driven ..... 23.6.4, A.23.6.4, D.3(17)
Angle of approach 12.3.2.3, A.12.3.2.3
Definition 3.3.11
Angle of departure 12.3.2.3, A.12.3.2.3
Definition 3.3.12
Angles of light emission ..... *see* Active horizontal angles of light emission
Application of standard 1.3, A.1.3.1
Approach, angle of ..... *see* Angle of approach
Approved (definition) 3.2.1, A.3.2.1
Around-the-pump foam proportioning system 21.2.4, A.21.2.4
Articulating boom (definition) 3.3.13
ASME pressure vessels 21.8.1, 21.8.6, 25.5.1.2, 25.5.3
Definition 3.3.14
Atmospheric foam concentrate tanks 21.6, A.21.6
Audible warning devices ..... D.3(12)
Aerial device stabilizers 20.21.4.1.1
Air systems
Breathing-air compressor 25.3.6.1
Low air warning 25.13.7
Auxiliary pump operation 17.9.2
Electrical system 13.3.4, 13.9, A.13.3.4, A.13.9.1.2
Electric sirens (electromechanical) ..... D.3(12)
Definition 3.3.56, A.3.3.56

Copyright National Fire Protection Association
Provided by IHS under license with NFPA
No reproduction or networking permitted without license from IHS
Not for Resale

Electronic sirens ..... D.3(12)
Definition 3.3.59, A.3.3.59
Engine operation 12.2.1.2
Fire pumps 16.12.1.4
Tractor-drawn vehicles 12.3.2.6.4
Authority having jurisdiction (definition) 3.2.2, A.3.2.2
Authorized person (definition) 3.3.15
Automatic electrical load management system ..... 13.3.6, A.13.3.6.1, D.3(5)
Definition 3.3.16
Auxiliary braking systems ..... 4.16.7, 12.3.1.7, A.12.3.1.7, D.3(6)
Definition 3.3.17
Auxiliary hydraulic power (definition) 3.3.18
Auxiliary pumps ..... 4.5.2, 16.5.3, Chap. 17
Definition 3.3.19
Purchasing specifications ..... Fig. B.1.1
Axes ..... 5.8.3, 6.7.3(1), 7.7.3.1(1), 8.8.2, 9.8.3, 11.9.3(1), A.6.7.3(1), A.8.8.2, A.10.5.2(4), A.10.5.2(5)
Axles, loads on ..... 4.12.2.2, 4.12.2.3, A.4.12.2.3.1, A.4.12.2.3.3, D.3(15)

-B-

Back-up alarms 13.12
Definition 3.3.20
Balanced pressure foam proportioning system 21.2.5, A.21.2.5
Base rail (definition) 3.3.21
Base section (definition) 3.3.22
Batteries
Low voltage alarm test 13.14.4
Low voltage electrical systems 13.4, A.13.4
Reserve capacity ..... *see* Reserve capacity (battery)
Belt-driven generators or alternators 23.6.4, A.23.6.4
Belts, ladder or ladder/escape ..... *see* Ladder belts or ladder/escape belts
Body ..... Chap. 15
Command area in 24.2.1, 24.2.2, A.24.2.1, A.24.2.2
Bolt cutters ..... 8.8.2(17), A.5.8.3(3), A.6.7.3(7), A.7.7.3.1(3), A.10.5.2(9)
Bonding, electrical 23.3.2
Definition 3.3.23
Booms 20.13.1
Definition 3.3.24
Booster pumps ..... *see* Auxiliary pumps
Booster supplied air systems 25.2.1, 25.6, A.25.2.1, A.25.6
Definition 3.3.26
Boxes, electrical 23.12.2
Remote power distribution 23.13.8, A.23.13.8
Braking systems ..... 12.3.1, A.12.1, A.12.3.1.5 to A.12.3.1.7, D.3(10)
Auxiliary ..... *see* Auxiliary braking systems
Breathing air (definition) 3.3.27
Breathing-air systems ..... 25.2.6; *see also* Air systems
Acceptance tests ..... 4.19.1(11)
Aerial ladders 20.2.13, A.20.2.13
Compressors 25.3, A.25.3
Definition 3.3.28
Elevating platforms 20.7.7
Hose 25.11, A.25.11
Low pressure breathing air-reel 25.10.10, A.25.10.10
Low pressure breathing hose 25.11.5, A.25.11.5
Pressure regulators 20.2.13.3.1, 20.7.7.3.1, 25.13.4
Purchasing specifications ..... Fig. B.1.1
Purification system 25.4, A.25.4.1, A.25.4.3.2
Remote 25.13
Bubble, foam (definition) 3.3.29
Burst pressure 17.4, 20.19.1, 20.19.2
Definition 3.3.30

-C-

Cabinets, equipment storage 24.8, A.24.8
Cab tilt systems 14.2
Carbon monoxide monitor (definition) 3.3.31
Cascade system (definition) 3.3.32
Ceiling, command area 24.9, A.24.9.1
Center of gravity (definition) 3.3.33
Certification 4.8, 4.19.1
Aerial devices 20.24, A.20.24.2.7
Fire pumps 16.13.1, A.16.13.1.2.3
Foam proportioning systems ..... 21.11, A.21.11.1(3)
Industrial supply pumps 18.2.4, 18.13.1, A.18.2.4.1, A.18.2.4.2
Low voltage electrical systems and warning devices 13.8.16, A.13.8.16
SCBA fill station 25.9.5
Third-party certification of test results 4.7
Water tank capacity 19.6, A.19.6.1
Chassis
Carrying capacity 12.1, A.12.1
Definition 3.3.34
Engine and related systems 12.2, A.12.2
Purchasing specifications ..... Fig. B.1.1
Circuit protection 13.2.7
Class A fire (definition) 3.3.35
Class A foam (definition) 3.3.36
Class B fire (definition) 3.3.37
Class B foam (definition) 3.3.38
Claw tools ..... 8.8.2(6), A.5.8.3(1), A.6.7.3(2), A.7.7.3.1(1)
Climate control, command area 24.3, A.24.3
Combination vehicles 4.2.3
Definition 3.3.39
Command and communications apparatus ... 24.1; *see also* Command and communications area
Definition 3.3.40
Command and communications area ... 4.5.9, 15.2, Chap. 24, A.15.2
Purchasing specifications ..... Fig. B.1.1
Communications area ..... *see* Command and communications area
Communications equipment and systems ..... 24.10 to 24.12, A.24.10.1, A.24.11
Aerial ladders 20.4.3, A.20.4.3.1
Elevating platforms 20.9.2, A.20.9.2.1
Purchasing specifications ..... Fig. B.1.1
Tractor-drawn vehicles 14.4.5
Compartments and compartmentation ..... 15.1, A.15.1.1; *see also* Enclosed compartments
Large compartment capacity A.12.1
Lighting 13.10.5
Components, fire apparatus ..... *see also specific components, e.g.,* Fire pumps
Installation 4.5
Operations and maintenance documents ..... 4.19.2, A.4.19.2.3(6)(g), A.4.19.2.4
Purchasing specifications ..... Fig. B.1.1
Removal and installation, during maintenance 4.15.3
Components, foam proportioning systems ... 21.3.4, 21.3.5, A.21.3.4
Compound gauge (definition) 3.3.41, A.3.3.41
Compressed air foam systems (CAFS) ..... 4.5.7, Chap. 22
Air mixing 22.4, A.22.4
Air source controls 22.6
Compressed air source 22.3
Definition 3.3.42, A.3.3.42
Labels and instruction plates 22.8
Piping 22.5, A.22.5
Pressure indicating devices, flowmeters, and indicators 22.7, A.22.7.6
Purchasing specifications ..... Fig. B.1.1
Tests, manufacturer's predelivery
Capacity rating test 22.9.1, A.22.9.1.3.3
Standby run test 22.9.2, A.22.9.2
Compressors, Breathing-air systems 25.3, A.25.3
Computer equipment 24.11, A.24.11
Conductors ..... *see* Grounding conductors; Line voltage conductors; Neutral conductors
Connections, swivel intake ..... *see* Swivel intake connections

Copyright National Fire Protection Association
Provided by IHS under license with NFPA
No reproduction or networking permitted without license from IHS
Not for Resale

Continuous duty 23.4.3, A.23.4.3
Definition 3.3.43
Continuous egress (definition) 3.3.44
Contractors .....*see also* Manufacturers
Data required of ..... 4.19, A.4.19, A.4.19.2.3(6)(g), A.4.19.2.4
Definition 3.3.45, A.3.3.45
Equipment supplied by 5.7, A.5.7
Initial attack fire apparatus 6.6, A.6.6
Mobile foam fire apparatus 11.8, A.11.8
Quint fire apparatus 9.7, A.9.7
Special service fire apparatus 10.4, A.10.4
Responsibility of 4.4
Controls 4.10, 4.11, A.4.11.1, A.10.2
Aerial devices 20.17, A.20.17.5
Stabilizers 20.21.4.1
Air systems ..... 25.2.9, 25.2.11.3 to 25.11.5, 25.7, 25.8, 25.9.2
Air tanks 25.5.8
Breathing-air compressors 25.3.6, A.25.3.6.2, A.25.3.6.3
Compressed air sources (foam systems) 22.6
Driving compartments 14.3.4, 14.4.9
Elevating platforms 20.9, A.20.9.2.1
Equipment racks 15.4.4
Foam proportioning systems 21.4, 21.9.2, A.21.4.1
Pumps
Auxiliary 17.7, 17.8, 17.10, 17.11
Fire ..... 16.9 to 16.12, 16.10.15, 16.11, A.16.9.1, A.16.10, A.16.11.1, A.16.12.2.1.1, A.16.12.3.2
Industrial supply 18.11, 18.12, A.18.11.1, A.18.12.1.1, A.18.12.3.2
Water transfer ..... 18.9 to 18.12, A.18.10
Winches 26.3.1, 26.4.5, 26.4.6, A.26.3.1.1, A.26.4.5, A.26.4.6.1
Convenient reach (definition) 3.3.46
Cooling systems
Breathing-air compressor 25.3.3, A.25.3.3.2
Pump drive engine 16.3.5
Vehicle engine ..... 12.2.2, A.12.2.2.1, D.3(21)
Cord, flexible, protection of 23.11.6, A.23.11.6.1
Cord reels .....*see* Reels, cord
Countertop, command area 24.6, A.24.6.1
Crew areas ..... Chap. 14, D.3(8)
Command area in 24.2.1, A.24.2.1
Crowbars ... 8.8.2(5), A.5.8.3(2), A.6.7.3(6), A.7.7.3.1(2), A.10.5.2(8)

-D-

Dead load (definition) 3.3.47
Defect (definition) 3.3.48
Definitions ..... Chap. 3
Delivery, tests on 4.17, A.4.17.1
Departure, angle of .....*see* Angle of departure
Dielectric voltage withstand test 23.16.2, A.23.16.2.4
Diesel engines, fuel and air systems 12.2.4.1, A.12.2.41
Direct drive (PTO) generators 23.6.1, A.23.6.1
Direct injection foam proportioning systems 21.2.6, A.21.2.6
Directional lights 13.13
Discharge outlets
Auxiliary pumps 17.6, 17.7.2, 17.8.4, 17.11.1, 17.11.2, A.17.6
Fire pumps 16.7, 16.9.2, 16.12.3, A.16.7, A.16.12.3.2
Foam tanks 21.6.9, 21.6.11, 21.7.5
Industrial supply pumps 18.7, 18.9.2, 18.12.3, A.18.7, A.18.12.3.2
Discharge outlet size
Definition 3.3.49
Fire pumps ..... 16.7.1, Table 16.7.1, 16.7.3, A.16.7.1, A.16.7.3
Industrial supply pumps ... 18.7.1, 18.7.5.2, 18.7.6, 18.7.7, A.18.7.1, A.18.7.5.2
Discharge valves
Auxiliary pumps 17.6.1, 17.6.2, 17.8.4
Fire pumps 16.7.3, 16.7.5, 16.7.6, 16.7.8, 16.7.10, A.16.7.3, A.16.7.5.2
Industrial supply pumps 18.7.3, 18.7.5, 18.7.6, 18.7.8,A.18.7.3, A.18.7.5.2
Documentation .....*see also* Instructions; Manuals, operations and maintenance
Air systems 25.2.12
From contractor ... 4.18, 4.19, A.4.18, A.4.19.2.3(6)(g), A.4.19.2.4
Definition 3.3.50
Foam proportioning systems 21.11.2
Line voltage electrical systems 23.16.6
Low voltage circuits, equipment, systems and warning devices 13.15
Optical warning devices 13.8.16, A.13.8.16
DOT cylinders ..... 25.5.1.2, 25.5.3; *see also* Self-contained breathing apparatus (SCBA)
Definition 3.3.51
Drains, foam tanks 21.6.7, 21.8.7
Drains, pump
Auxiliary pump 17.8.6
Fire pump 16.8
Industrial supply pumps 18.8
Drain time (foam) (definition) 3.3.52
Drain valves
Aerial ladder water delivery system 20.6.1.8, A.20.6.1.8
Auxiliary pumps 17.8.6
Cooling system 12.2.2.2
Elevating platform water delivery system 20.12.9.1, A.20.12.9.1
Foam tanks 21.6.7.1, 21.8.7
Industrial supply pumps 18.7.6, 18.8
Water tower water delivery system 20.16.9, A.20.16.9
Driving compartments ..... Chap. 14, D.3(8)
Line voltage electrical systems, indicators 23.6.1.6, 23.6.1.7
Pump indicators in
Auxiliary pumps 17.9.3
Fire pumps ..... 16.10.1.4, 16.10.2.1, 16.10.2.2, 16.10.3.1, 16.10.3.2, 16.10.4.1, 16.10.4.2, 16.10.5.1, 16.10.5.2, 16.10.6.1, 16.10.6.2, 16.10.7.1 to 16.10.7.4, 16.10.8.1, 16.10.8.2, 16.10.9.1, 16.10.9.2, A.16.10.2.1, A.16.10.3.1
Industrial supply pumps ..... 18.10.1.4, 18.10.2.1, 18.10.2.2, 18.10.3.1, 18.10.3.2, 18.10.4.1, 18.10.4.2, 18.10.5.1, 18.10.5.2, 18.10.6.1, 18.10.6.2, 18.10.7.1 to 18.10.7.4, 18.10.8.1, 18.10.8.2, 18.10.9.1, 18.10.9.3, A.18.10.2.1, A.18.10.3.1
Purchasing specifications ..... Fig. B.1.1
Winches 26.4.6, A.26.4.6.1
Dry locations 23.12.5.1, A.23.12.5.1.3
Definition 3.3.53
Dump valves (definition) 3.3.54

-E-

Eductor foam proportioning systems 21.2.1, A.21.2.1
Eductors A.21.2.1, A.21.2.4
Definition 3.3.55, A.3.3.55
Electrical equipment
Fixed (definition) 3.3.57
Portable (definition) 3.3.58
Sirens (electromechanical) ..... D.3(12)
Definition 3.3.56, A.3.3.56
Winches 26.3, A.26.3.1.1
Electrical load
Automatic management system 13.3.6, A.13.3.6.1, D.3
Definition 3.3.16
Minimum continuous .....*see* Minimum continuous electrical load
Total continuous ..... 13.3.6.1, 16.13.2.1.3.1, 18.13.2.1.3.1, A.13.3.6.1, D.3(5)
Definition 3.3.165
Electrical systems .....*see also* Line voltage circuits, equipment, or systems; Low voltage circuits, equipment, systems, and warning devices; Wiring
Aerial devices ..... 20.18.5 to 20.18.7, 20.18.9 to 20.18.11
Communications, console for 24.10, A.24.10.1
Contractor's documentation ..... 4.19.1(1)(j), 4.19.1(13)
Load management ..... 13.3.6, A.13.3.6.1, D.3(5)

--`,,```,,,,````-`-`,,`,,`,`,,`---

Copyright National Fire Protection Association
Provided by IHS under license with NFPA
No reproduction or networking permitted without license from IHS
Not for Resale

Safety 4.9.2, 4.11, A.4.11.1
Warning systems 13.3.4, 13.4.6.4, A.13.3.4, A.13.4.6.4
Electric siren (electromechanical)
(definition) 3.3.5.6
Electrocution hazards 20.18.3
Electromagnetic interference suppression 13.7, A.13.7.1
Electronic sirens ..... D.3(12)
Definition 3.3.59, A.3.3.59
Elevating platforms 20.7
Definition 3.3.60
Ladders on 20.11
Operating mechanisms 20.10, A.20.10.1, A.20.10.3.1
Operating positions 20.9, 20.12.7, A.20.9.2.1
Purchasing specifications ..... Fig. B.1.1
Rated capacity 20.8
Turntable 20.10.3, A.20.10.3.1
Water delivery systems 20.12, A.20.12
Enclosed compartments ..... 15.1.1, A.15.1.1, D.3(1)
Definition 3.3.61
Engines, line voltage electrical system power source 23.5, 23.6.1, A.23.5.1, A.23.6.1
Engines, used for pumping
Auxiliary pumps 17.9, A.17.9.4
Fire pumps 16.3, 16.10.1.1, 16.10.2, 16.11, 16.13.3, A.16.3.4, A.16.10.2.1, A.16.11.1
Industrial supply pumps 18.3, 18.10, 18.11, A.18.3.3, A.18.10, A.18.11.1
Overload test 16.13.3
Engines, vehicle ..... 12.2, A.12.2, D.3(9)
Equipment ..... 4.3.1(4), 4.4.1
On aerial fire apparatus ..... 8.2 to 8.8, A.8.3, A.8.5 to A.8.8
Containment 15.3, A.15.3.1, A.15.3.2
Contractors, supplied by .....*see* Contractors
Holders 15.3, A.15.3.1, A.15.3.2
On initial attack fire apparatus ..... 6.2 to 6.7, A.6.4 to A.6.7
On mobile foam fire apparatus ..... 11.2 to 11.9, A.11.6 to A.11.9
On mobile water supply fire apparatus ... 7.2 to 7.7, A.7.4 to A.7.7
Mounting .....*see* Mounting, of equipment
On pumper fire apparatus ..... 5.2 to 5.8, A.5.4 to A.5.8
Purchasing specifications ..... Annex B
On quint fire apparatus ..... 9.2 to 9.8, A.9.5 to A.9.8
Racks, powered 15.4
Definition 3.3.129
Special service fire apparatus ..... 10.2 to 10.5, A.10.3 to A.10.5
Storage .....*see* Storage
Weights and dimensions ..... A.12.1, Annex C
Equivalency to standard 1.5
Escape, means of, for driving and crew areas 14.1.14
Exhaust systems
Auxiliary engine-driven generators 23.6.3.4, A.23.6.3.4.1
Engine 12.2.5, A.12.2.5.1
Expansion ratio (definition) 3.3.62
Exterior (definition) 3.3.63
Extinguishers, portable fire .... 5.8.3, 6.7.3, 7.7.3.1, 8.8.2, 9.8.3, 10.5.2, 11.9.3(4)

-F-

Federal Motor Vehicle Safety Standard ....*see* FMVSS (Federal Motor Vehicle Safety Standard)
Fill hose .....*see* SCBA fill hose
Fill station .....*see* SCBA fill station
Fire apparatus .....*see also* specific apparatus
Definition 3.3.64
Guidelines for first line and reserve apparatus ..... Annex D
Fire hose 16.13.2.2.2, 18.13.2.2.2
On initial attack fire apparatus 6.7.2
On mobile foam fire apparatus 11.9.2, A.11.9.2
On mobile water supply fire apparatus 7.7.2, A.7.7.2.2
Preconnected hose line ..... Fig. B.1.1
Definition 3.3.130, A.3.3.130
On pumper fire apparatus 5.8.2, A.5.8.2
Purchasing specifications ..... Annex B
On quint fire apparatus 9.8.2, A.9.8.2
Fire pumps ..... 4.5.1, Chap. 16
Aerial fire apparatus 8.3, 8.6.2, 8.8.3, A.8.3
Certification 16.13.1, A.16.13.1.2.3
Construction requirements 16.5, A.16.5.1
Contractor's documentation ..... 4.19.1(1), 4.19.1(3) to 4.19.1(7)
Controls ..... 16.9 to 16.12, 16.10.15, 16.11, A.16.9.1, A.16.10, A.16.11.1, A.16.12.2.1.1, A.16.12.3.2
Definition 3.3.65
Design and performance requirements 16.2, A.16.2
Discharge outlets 16.7, 16.9.2, 16.12.3, A.16.7, A.16.12.3.2
Drains 16.8
Elevating platform water delivery system 20.12.6
Engines 16.3, 16.10.1.1, 16.10.1.4, 16.10.2, 16.11, 16.13.3, A.16.3.4, A.16.10.2.1, A.16.11.1
Engine speed advancement, interlocks to prevent 16.10.10, 16.10.11
Gauge pressure 16.12.2.1.1, 16.12.2.1.2
History of standard E.1
Initial attack fire apparatus 6.2
Intake connections 16.6, 16.9.2, 16.12.2, A.16.6
Mobile foam fire apparatus 11.2, 11.9.3.2
Mobile water supply fire apparatus 7.2, 7.5.2, 7.7.2.2, 7.7.3.2, A.7.7.2.2
Net pump pressure .....*see* Net pump pressure
Parallel/series control 16.2.3.2.4, 16.10.12, A.16.2.3.2.4
Portable ..... A.5.8.3(14), A.7.7.3.1(9)
Power train capability 16.4, 16.10.1.2, A.16.4.3, A.16.10.1.2
Pressure control system 16.10.13, 16.12.2, 16.13.4, A.6.10.13
Priming devices 16.13.5
Pulsation-free fire streams 16.5.5
Pump and roll operation 16.2.2, 16.10.6, 16.10.7, A.16.2.2
Pumper fire apparatus 5.2
Pumping system capability 16.2.3, A.16.2.3.2.4
Purchasing specifications ..... Fig. B.1.1
Quint fire apparatus 9.2, 9.8.3.2
Rated capacity .....*see* Rated capacity (water pump)
Special service fire apparatus 10.2
Stationary operation ... 16.10.2 to 16.10.9, A.16.10.2.1, A.16.10.3.1
Suction capability 16.2.4, A.2.16.2.4.2, A.16.2.4.1
Tests 16.13, A.6.13
Vacuum 16.2.3.3, 16.13.6
Valves .....*see* Valves
Water tower water delivery system 20.16.6, 20.17.4.2
First aid kit ..... 5.8.3(10), 6.7.3(8), 7.7.3.1(8), 8.8.2(13), 9.8.3(11), 10.5.2(6), 11.9.3(7)
First line apparatus ..... Annex D
Fixed power source ... 4.19.1(10), 16.13.2.1.3.2, 18.13.2.1.3.2; *see also* Line voltage circuits, equipment, or systems
Definition 3.3.66
Operational test 23.16.5, A.23.16.5
Flash rate, optical warning devices 13.8.11, A.13.8.11
Floors, command area 24.9, A.24.9.1
Flowmeters
Aerial ladder water delivery system 20.6.1.7
Compressed air foam systems 22.7, A.22.7.6
Elevating platforms 20.12.7
Fire pumps 16.12.3, 16.12.4, A.16.12.3.2
Foam proportioning systems 21.5
Industrial supply pumps 18.12.3, A.18.12.3.2
Fly section 20.3.2, 20.5.3, 20.5.4, A.20.5.4
Definition 3.3.67
FMVSS (Federal Motor Vehicle Safety Standard) 14.1.3.2, 14.1.4
Definition 3.3.68
Foam
Definition 3.3.69
Drain time (definition) 3.3.52
Foam concentrate pumps 21.7, A.21.7
Foam concentrates ..... 21.3.1, 21.3.2(3), 21.3.4, 21.3.6 to 21.3.9, 21.6.10, A.21.1, A.21.3.1, A.21.3.4, A.21.6.10.2
Definition 3.3.70
Flush lines 21.3.9

--`,,```,,,,````-`-`,,`,,`,`,,`---
Copyright National Fire Protection Association
Provided by IHS under license with NFPA
No reproduction or networking permitted without license from IHS
Not for Resale

Foam delivery equipment ..... A.5.8.3(17), A.6.7.3(17)
Foam fire apparatus, mobile .....*see* Mobile foam fire apparatus
Foam proportioner (definition) 3.3.71
Foam proportioning systems ..... 4.5.6, 11.4, Chap. 21
Accuracy 21.10, A.21.10
Atmospheric foam concentrate tank 21.6, A.21.6
Certification and documentation ..... 21.11, A.21.11.1(3)
Compressed air foam systems 22.2.1, A.22.2.1
Controls 21.4, A.21.4.1
Definition 3.3.72
Design and performance requirements ... 21.3, A.21.3.1, A.21.3.4
Foam concentrate pumps 21.7, A.21.7
Labels, plates, and instructions 21.9, A.21.9.3
Pressure indicating devices, flowmeters, and indicators 21.5
Pressure vessel foam concentrate or foam solution tanks 21.8
Purchasing specifications ..... Fig. B.1.1
Types, requirements by 21.2, A.21.2
Foam solution
Definition 3.3.73
Tanks 21.8
Foam tanks 11.5
Fuel systems
Auxiliary engine-driven generators 23.6.3.3
Engine 12.2.4, A.12.2.4.1
Fuel tanks 12.3.4, A.12.3.4.1
Fully enclosed personnel area (definition) 3.3.74

-G-

Gallon (definition) 3.3.75
Gasoline engines, fuel and air systems 12.2.4.2, A.12.2.4.2.1.3
Gauge pressure 16.12.2.1.1, 16.12.2.1.2, 18.12.2.1.1, 18.12.2.1.2, 22.9.1.1.1
Definition 3.3.77
Gauges ..... 4.10.1, 4.10.3; *see also* Pressure gauges
Air systems 20.2.13.3.1, 20.7.7.3.1, 25.2.9, 25.2.11.4, 25.3.6.2, 25.13.4, A.25.3.6.2
Auxiliary pumps 17.7.1, 17.11
Compound (definition) 3.3.41, A.3.3.41
Compressed air foam systems 22.7.2, 22.9.1.2.2
Definition 3.3.76
Fire pumps 16.9.1, 16.9.2, 16.12.2.1.5, 16.12.3.7, 16.12.5, A.16.12.3.2
Foam proportioning systems 21.9.2
Industrial supply pumps 18.9.1, 18.9.2, 18.12.2.1.5, 18.12.3.7, 18.12.5, A.18.9.1
Test 16.13.2.2.4, 16.13.2.2.5, 18.12.5, 18.13.2.2.4
GAWR (gross axle weight rating) ..... 4.12.2.3.2, 4.19.1(1)(d), 12.1
Definition 3.3.78, A.3.3.78
GCWR (gross combination weight rating) 12.1, A.12.1
Definition 3.3.79, A.3.3.79
General requirements ..... Chap. 4
Generators (alternators) ..... D.3(22)
Belt-driven 23.6.4, A.23.6.4
Chassis engine-driven generators 23.5, A.23.5.1
Direct drive (PTO) 23.6.1, A.23.6.1
Fixed 23.6.3, A.23.6.3
Motor-driven A.23.6.5.1
Portable ..... 23.7, A.5.8.3(11), A.6.7.3(13), A.10.5.2(19), A.23.7
Definition 3.3.126, A.3.3.126
GFCI .....*see* Ground-fault circuit interrupters
Grade (definition) 3.3.80, A.3.3.80
Gravity, center of (definition) 3.3.33
Gross axle weight rating .....*see* GAWR (gross axle weight rating)
Gross combination weight rating .....*see* GCWR (gross combination weight rating (GCWR)
Gross vehicle weight rating .....*see* GVWR (gross vehicle weight rating)
Ground clearance (definition) 3.3.81
Ground-fault circuit interrupters (GFCIs) 23.13.8.3, A.23.13.8.3
Definition 3.3.82
Grounding conductors 23.3.1, A.23.3.1
Definition 3.3.83
Ground ladders ..... 4.3.1(4)
Aerial fire apparatus 8.7, A.8.7
Initial attack fire apparatus 6.6.1
Pumper fire apparatus 5.7.1, A.5.7.1.2
Purchasing specifications ..... Fig. B.1.1
Quint fire apparatus 9.7.1
Special service fire apparatus 10.4.1
Ground lighting ..... 13.10.1, D.3(7)
Guards 4.9.1, 20.18.4, A.4.9.1
GVWR (gross vehicle weight rating) ..... 4.12.2.3.2, 12.1, A.12.1, D.3(6), D.3(15)
Auxiliary brake requirement 12.3.1.7, A.12.3.1.7
Definition 3.3.84, A.3.3.84

-H-

Halligan-type tools ..... A.5.8.3(4), A.6.7.3(8), A.7.7.3.1(4), A.10.5.2(10)
Handrails, access 15.8, A.15.8.4
Hazard lighting 13.11, 23.15.2.9, A.13.11.2
Hazardous material response fire apparatus A.10.5.2
Definition 3.3.85
Height, of vehicle 4.12.1, 12.1.4.1, 12.1.4.2, A.12.1.4.1
High-idle speed control (definition) 3.3.86
History of standard ..... D.2, Annex E
Hose ..... 4.3.1(4)
Aerial ladder water delivery system ..... 20.6.2(2), A.20.6.2
Air .....*see* Air hose
Elevating platform water delivery system 20.12.4
Fire .....*see* Fire hose
SCBA fill .....*see* SCBA fill hose
Suction .....*see* Suction hose
Hose bed lighting 13.10.2
Hose clamps ..... A.6.7.3(18)
Hose storage 15.10, A.15.10
Aerial fire apparatus 8.6, A.8.6.1
Initial attack fire apparatus 6.5, A.6.5
Mobile foam fire apparatus 11.7, A.11.7
Mobile water supply fire apparatus 7.5, A.7.5.1
Pumper fire apparatus 5.6, A.5.6
Quint fire apparatus 9.6, A.9.6
Hose straps ..... A.5.8.3(9), A.6.7.3(11), A.7.7.3.1(7)
Hydrant valves ..... A.5.8.3(5), A.6.7.3(9), A.7.7.3.1(5)
Hydraulic jacks .... A.8.8.2(6), A.8.8.2(7), A.10.5.2(23), A.10.5.2(24)
Hydraulic systems
Aerial device 20.18.8, 20.18.10, 20.19, A.20.19.7
Auxiliary power (definition) 3.3.18
Cab tilt systems 14.2.1
Generators, hydraulically driven 23.6.2, A.23.6.2
Hydraulic lines 4.11, A.4.11.1
Winches 26.4, A.26.4.5, A.26.4.6.1

-I-

Illumination, of controls and instructions 4.10.1
Indicators ..... D.3(2); *see also* Warning systems
Aerial ladder operator's positions 20.4.1
Air system compressors 25.3.6.1
Auxiliary pumps 17.9.2, 17.9.3
Compressed air foam systems 22.7, A.22.7.6
Equipment rack 15.4.5
Fire pumps .... 16.3.6, 16.7.10, 16.9.1, 16.9.2, 16.10.2.1 to 6.10.2.3, 16.10.3.1 to 16.10.3.3, 16.10.4.1 to 16.10.4.3,16.10.5.1 to 16.10.5.3, 16.10.6.1 to 16.10.6.3,16.10.7.1 to 16.10.7.5, 16.10.8.1 to 16.10.8.3,16.10.9.1 to 16.10.9.3, 16.10.13.2, 16.11.2, A.16.9.1, A.16.10.2.1, A.1116.10.3.1
Foam proportioning systems 21.5, 21.9.2

--`,,```,,,,````-`-`,,`,,`,`,,`---

Copyright National Fire Protection Association
Provided by IHS under license with NFPA
No reproduction or networking permitted without license from IHS
Not for Resale

Industrial supply pumps ..... 18.3.5, 18.10.1.4, 18.10.2.1 to 18.10.2.3, 18.10.3.1 to 18.10.3.3, 18.10.4.1 to 18.10.4.3, 18.10.5.1 to 18.10.5.3, 18.10.6.1 to 18.10.6.3,18.10.7.1 to 18.10.7.5, 18.10.8.1 to 18.10.8.3, 18.10.9.1 to 18.10.9.3, A.18.10.2.1, A.18.10.3.1
Line voltage electrical system power source 23.4.6.1
Load limit (definition) 3.3.101
Low voltage electrical systems 13.4.6.4, A.13.4.6.4
Stabilizers 20.21.4.4
Winches 26.4.6.2
Industrial supply pumps ..... 4.5.3, 4.19.1(3) to 4.19(7), Chap. 18
Certification 18.2.4, 18.13.1, A.18.2.4.1, A.18.2.4.2
Construction requirements 18.5, A.18.5.1
Controls ..... 18.9 to 18.12, A.18.10
Definition 3.3.87
Design and performance requirements 18.2, A.18.2
Discharge outlets 18.7, 18.9.2, A.18.7
Drains 18.8
Engines 18.3, 18.10, 18.11, A.18.3.3, A.18.10, A.18.11.1
Instrumentation 18.12, A.18.12.1.1, A.18.12.3.2
Intake connections 18.6, 18.9.2, A.18.6
Pulsation-free fire streams 18.5.5
Pump and roll operation 18.10.6
Pump drive system 18.10, A.18.10
Pumping system capability 18.2.3, A.18.2.3
Purchasing specifications ..... Fig. B.1.1
Stationary operation ..... 18.10.2 to 18.10.9, A.18.10.2.1, A.18.10.3.1
Suction capability 18.2.4, A.18.2.4.1, A.18.2.4.2
Tests 18.5.2, 18.13, A.18.13
Initial attack apparatus ..... 4.2.1(2), Chap. 6
Definition 3.3.88
Requirements ..... Table 4.2.2
Inlet connections
Air tanks 25.5.8.2
Foam tanks 21.6.12
Inlet devices, line voltage electrical systems 23.12.5, A.23.12.5
In-service weight (definition) 3.3.89
Instability (definition) 3.3.90
Instructions 4.10, A.4.10.2
Air systems 25.2.11.3
Compressed air foam systems 22.8
Foam proportioning systems 21.9, A.21.9.3
Installation 4.5
Light mast, power-operated 23.15.3.1
Line voltage electrical system power source 23.4.7
Maintenance and repair ..... 4.19.2, A.4.19.2.3(6)(g), A.4.19.2.4
Instrumentation ..... *see* Controls
Intake, breathing-air compressor 25.3.2, A.25.3.2.1
Intake connections, pump
Auxiliary pumps 17.5, 17.7.2, A.17.5.1
Fire pumps 16.6, 16.9.2, 16.12.2, A.16.6
Industrial supply pumps 18.6, 18.9.2, A.18.6
Intake connection size
Auxiliary pumps 17.5.1, A.17.5.1
Definition 3.3.91
Fire pumps 16.6.1, A.16.6.1
Industrial supply pumps 18.6.1, A.18.6.1
Intake lines, tank to pump 19.3, A.19.3.3
Intake-side foam proportioning system 21.2.3, A.21.2.3
Intake strainers 16.6.2, 18.6.2, A.16.6.2.2, A.18.6.2.2
Intake valves ..... 16.6.3 to 16.6.6, 16.6.11, A.16.6.5
Auxiliary pumps 17.5.1, 17.5.2
Foam concentrate pumps 21.7.5, A.21.7.5
Industrial supply pumps 18.6.3, 18.6.4
Relief (definition) 3.3.92
Water tanks 19.3.1, 19.3.2.1, 19.3.2.2
Interior (definition) 3.3.93
Interlocks
Chassis engine speed control 12.2.1.4.2, A.12.2.1.4.2
Definition 3.3.94
Direct drive (PTO) generators 23.6.1.3, 23.6.1.4, A.23.6.1.4
Fire pump engine speed advancement, interlocks to prevent ..... 16.10.10, 16.10.11, D.3(19)
Industrial supply pump engine speed advancement, interlocks to prevent 18.10.11
Winch operation 26.4.6.3
Inverters
Dynamic power A.23.6.5.1
Static power A.23.6.5.1
Invertors
Dedicated 23.6.4, A.23.6.4

-K-

Knuckles 20.18.11
Definition 3.3.95

-L-

Labeled (definition) 3.2.3
Labels
Aerial devices 20.23.2
Aerial ladders 20.4.1
Air systems 25.2.11, 25.3.8, 25.7, A.25.2.11.6
Compressed air foam systems 22.8
Controls and instruction 4.10.2, A.4.10.2
Cord reels, line voltage electrical systems 23.13.7, A.23.13.7
Crew and driving compartments 14.1.2
Definition 3.3.96
Fire pumps 16.10.1.3
Foam proportioning systems 21.9, A.21.9.3
Foam tank fill 21.6.10, A.21.6.10.2
Industrial supply pumps 18.2.2, 18.9.1, 18.10.1.3, A.18.9.1
Light masts, power-operated 23.15.3
Line voltage electrical system power source 23.4.9, 23.6.1.6
Pump operator's panel 16.9.1, 17.7.1, A.16.9.1
Receptacles and electrical inlet devices 23.12.5.5
Weight ratings of vehicle 12.1.3
Wiring, line voltage electrical systems 23.11.7
Ladder belts or ladder/escape belts .... 5.8.3.3, 8.8.2(18), 9.8.3(18), 11.9.3.3
Ladders
Aerial ..... *see* Aerial ladders
On apparatus 15.7, A.15.7.1, A.15.7.3
Attic ..... A.6.7.3(5)
On elevating platforms 20.11
Ground ..... *see* Ground ladders
Ladder section (definition) 3.3.97
Large apparatus, optical warning device requirements ..... 13.8.13, Table 13.8.13.5, A.13.8.13
Legal requirements 4.6
Life safety harnesses ..... A.10.5.2(13)
Life safety ropes ..... 8.8.2, 9.8.3, A.10.5.2(14), A.10.5.2(15)
Light emission, angles of ..... *see* Active horizontal angles of light emission
Lighting levels, command area 24.5, A.24.5.2
Lighting systems
Aerial devices 20.18.5, 20.18.6
Flashing, on equipment rack 15.4.6
Flash rate, optical warning devices 13.8.11, A.13.8.11
Hand lights ..... 5.8.3(5), 6.7.3(3), 7.7.3.1(3), 8.8.2(8), 9.8.3(5), 10.5.2(1), 11.9.3(3), A.5.8.3(12), A.6.7.3(14), A.10.5.2(20)
Hazard lights 13.11, 23.15.2.9, A.13.11.2
Indicators ..... *see* Indicators
Optical warning devices ..... 13.3.3, 13.4.7, 13.8, A.13.3.3(7), A.13.4.7, A.13.8
Scene 23.14
Stop, tail, and directional lights 13.13
Warning lights ..... *see* Indicators
Work lighting ..... 13.10, A.8.8.2(1), D.3(7)
Light masts, power-operated 23.15, A.23.15

Copyright National Fire Protection Association
Provided by IHS under license with NFPA
No reproduction or networking permitted without license from IHS
Not for Resale

Line voltage circuits, equipment, or systems ..... 4.5.8, Chap. 23, D.3(22)
Cord reels 23.13, A.23.13
Definition 3.3.98
Grounding and bonding 23.3, A.23.3.1
Light masts, power-operated 23.15, A.23.15
Location ratings 23.2.6, A.23.2.6.4
National Electrical Code®, conformance with 23.2.3
Overcurrent protection 23.10
Panelboards 23.10.3
Power source ..... 23.4 to 23.6, A.23.4 to A.23.6
Apparatus low voltage power supply systems 23.6.5, A.23.6.5.1
Belt-driven generators or alternators 23.6.4, A.23.6.4
Direct drive (PTO) generators 23.6.1, A.23.6.1
External source, power supplied from 23.8, A.23.8.1, A.23.8.2.2
Fixed auxiliary engine-driven generators 23.6.3, A.23.6.3
Hydraulically driven generators 23.6.2, A.23.6.2
Instrumentation 23.4.6, A.23.4.6.3
Operation 23.4.8, A.23.4.8
Portable generator installations 23.7, A.23.7
Protection 23.10.1
Specification label 23.4.9
Purchasing specifications ..... Fig. B.1.1
Scene lighting systems 23.14
Tests 23.16, A.23.4.3, A.23.16
Wiring 23.11, 23.12, A.23.11, A.23.12
Line voltage conductors 23.3, A.23.3.1
Definition 3.3.99
Listed
Definition 3.2.4, A.3.2.4
Receptacles and electrical inlet devices 23.12.5.6, A.23.12.5.6
Live load (definition) 3.3.100
Load limit indicators (definition) 3.3.101
Low voltage circuits, equipment, systems, and warning devices ..... Chap. 13
Audible warning devices 13.9, A.13.9.1.2
Backup alarm 13.12
Batteries 13.4, A.13.4
Definition 3.3.102
Documentation 13.15
Electromagnetic interference suppression 13.7, A.13.7.1
Hazard lighting 13.11, 23.15.2.9, A.13.11.2
Line voltage electrical systems power source 23.6.5, A.23.6.5.1
Optical warning devices ..... 13.3.3, 13.4.7, 13.8, A.13.3.3(7), A.13.4.7, A.13.8
Performance tests 13.14, A.13.14.1
Power supply 13.3, A.13.3
Purchasing specifications ..... Fig. B.1.1
Starting devices 13.5
Stop, tail, and directional lights 13.13
Temperature exposure 13.6
Wiring 13.2, A.13.2.1, A.13.2.6
Work lighting 13.10
Lubrication system, engine 12.2.3, A.12.2.3.1

-M-

Maintenance ..... D.3(9); *see also* Manuals, operations and maintenance
Air systems 25.2.10, 25.2.12
Routine, of lubricant and fluid levels 4.15.1, A.4.15.1
Special tools for 4.15.2
Mallets, rubber ... 5.8.3(15), 6.7.3(13), 7.7.3.3, 8.8.3.1(3), 9.8.3(16), 11.9.3(12)
Management system, automatic electrical load .....*see* Automatic electrical load management system
Manuals, operations and maintenance ..... 4.19.2, A.4.19.2.3(6)(g), A.4.19.2.4
Air systems 25.2.12
Compressed air foam systems 22.8.4
Foam proportioning systems 21.9.4
Manufacturers
Certification by .....*see* Certification
Definition 3.3.103
Documentation by ..... 4.18, 4.19, A.4.18, A.4.19.2.3(6)(g), A.4.19.2.4
Air hose reels 25.10.1, A.25.10.1
Industrial supply pump 18.2.4, A.18.2.4.1, A.18.2.4.2
Low voltage electrical systems and warning devices 13.8.16, 13.15, A.13.8.16
SCBA fill station 25.9.5
Predelivery tests .....*see* Predelivery tests, manufacturer's
Master stream appliance ..... A.5.8.3(16)
Maximum pump close-off pressure (definition) ... 3.3.104, A.3.3.104
Means of escape, driving and crew areas 14.1.14
Measurement, units of 1.6, A.1.6
Metal finish 15.9, A.15.9.2, A.15.9.3.2
Minimum continuous electrical load ..... 4.3.1(3), 13.3.2, 13.3.3, 13.3.6.2, 13.4.2, 13.14.3.2.2, 13.15(2), A.13.3.2, A.13.3.3(7)
Definition 3.3.105
Miscellaneous equipment (definition) ... 3.3.106; *see also* Equipment
Miscellaneous equipment allowance ... Annex C; *see also* Equipment
Definition 3.3.107
Mobile foam fire apparatus ..... 4.2.1(7), Chap. 11
Definition 3.3.108
Requirements ..... Table 4.2.2
Mobile water supply apparatus (tanker, tender) .... 4.2.1(3), Chap. 7
Definition 3.3.109
External fill 19.5.1, A.19.5.1.1
Requirements ..... Table 4.2.2
Water transfer 19.5.2, A.19.5.2
Momentary switches (definition) 3.3.110
Monitors
Aerial ladder water delivery system 20.6.1.3, A.20.6.1.3.5
Air quality 25.4.7.1
Definition 3.3.8
Carbon monoxide (definition) 3.3.31
Elevating platform water delivery system 20.12.2, 20.12.3, A.20.12.3.4
Water tower water delivery system 20.16.3
Mounting, of equipment ..... 14.1.11, D.3(20)
Access handrails 15.8.4, A.15.8.4
Aerial fire apparatus 8.8.1.1, 8.8.1.2
Air tanks 25.5.7
Batteries 13.4.4, A.13.4.4.4
Breathing-air compressor and driver assembly 25.3.7
Holders 15.3.2, A.15.3.2
Hose storage 15.10.5
Industrial supply pump 18.2.1.1
Initial attack fire apparatus 6.7.1.1, 6.7.1.2
Mobile foam fire apparatus 11.9.1.1, 11.9.1.2
Mobile water supply fire apparatus 7.7.1.1, 7.7.1.2
Powered equipment racks 15.4
Definition 3.3.129
Pressure indicating devices and flowmeters 16.12.4
Pumper fire apparatus 5.8.1.1, 5.8.1.2
Quint fire apparatus 9.8.1.1, 9.8.1.2
Self-contained breathing apparatus (SCBA) ... 14.1.9.3.1, 14.1.10, 15.5.1, 15.5.3, A.14.1.10.1
Slip-on fire-fighting module 15.12.4
Special service fire apparatus 10.5.1.1, 10.5.1.2
Multiple configuration (definition) 3.3.111

-N-

National Hose threads (NH) 5.8.3, 8.8.3.1, 16.6.1.1, 16.7.2.1, 17.5.2, 17.6.3.1, 18.6.1.1, 18.7.2.1, A.6.7.2.2, A.17.6.3.1
Definition 3.3.112
Net pump pressure 16.13.2.3.3, 16.13.2.3.3.4, 16.13.3, 18.13.2.3.3
Definition 3.3.113, A.3.3.113

Copyright National Fire Protection Association
Provided by IHS under license with NFPA
No reproduction or networking permitted without license from IHS
Not for Resale

Neutral conductors 23.3.1.4, 23.3.1.5, 23.3.2.1, 23.3.2.2
Definition 3.3.114
Noise levels, command area 24.4, A.24.4
Nozzle reaction (definition) 3.3.115
Nozzles
Aerial ladder water delivery system 20.6.1.3.5, 20.6.1.4, A.20.6.1.3.5
Elevating platform water delivery system 20.12.3, A.20.12.3.4
Fire pumps 16.13.2.2.3
Industrial supply pumps 18.13.2.2.3
Initial attack fire apparatus 6.7.2
Mobile foam fire apparatus 11.9.2, A.11.9.2
Mobile water supply fire apparatus 7.7.2
Pumper fire apparatus 5.8.2, A.5.8.2
Quint fire apparatus 9.8.2, A.9.8.2
Self-educting master stream 21.2.2, A.21.2.2

-O-

Operator's panel
Air systems 25.2.9
Definition 3.3.116
Elevating platforms 20.12.7
Line voltage electrical system power source instrumentation 23.4.6.3, 23.4.6.4, A.23.4.6.3
Pump .....*see* Pump operator's panel
Winch 26.4.6.3
Operator's position
Aerial devices ..... 20.18.1 to 20.18.3, A.20.18.1, A.20.18.2
Aerial ladder 20.4, 20.5.4, A.20.4.3.1, A.20.5.4
Elevating platform 20.9, 20.12.7, A.20.9.2.1
Light mast, power-operated, instructions for 23.15.3
Line voltage electrical systems 23.6.1.6
Pump operator .....*see* Pump operator's position
Optical center (definition) 3.3.117
Optical element (definition) 3.3.118
Optical power (definition) 3.3.119
Optical source (definition) 3.3.120, A.3.3.120
Optical warning devices ..... D.3(2); *see also* Indicators
Auxiliary pump operation 17.9.2
Certification of compliance 13.8.16, A.13.8.16
Colors 13.8.12, A.13.8.12
Definition 3.3.121
Electrical system ..... 13.3.3, 13.3.4, 13.4.7, 13.8, A.13.3.3(7), A.13.3.4, A.13.4.7, A.13.8
Engine operation 12.2.1.2
Fire pumps 16.12.1.4
Flash rate, optical warning devices 13.8.11, A.13.8.11
Large apparatus ..... 13.8.13, Table 13.8.13.5, A.13.8.13
Small apparatus ..... 13.8.14, Table 13.8.14.4, A.13.8.14
Stabilizers 20.21.4.4
Tests 13.8.15
Tractor-drawn vehicles 12.3.2.6.4
Overcurrent protection
Branch circuit 23.10.2
Line-voltage electrical systems 23.10
Low voltage electrical systems 13.2.7
Panelboards 23.10.3
Power source protection 23.10.1
Overloading A.12.1
Override
Aerial device (definition) 3.3.123
Definition 3.3.122

-P-

Panelboards
Definition 3.3.124
Line voltage electrical systems 23.10.3
Parallel/series control, pumps 16.2.3.2.4, 16.10.12, 17.8.3, 18.10.12, A.16.2.3.2.4
Parking brakes 12.3.1.3, 12.3.1.6, A.12.3.1.6
Performance requirements 4.13, A.4.13
Performance tests, low voltage electrical systems and warning devices 13.14, A.13.14.1
Personnel, weight of 12.1.2, A.12.1.2
Personnel safety 4.9, 15.7.4, A.4.9.1
Aerial devices 20.18, 20.23.1.2, A.20.18.1, A.20.18.2
Compressed air foam systems 22.8.3
Pike poles ..... 5.8.3, 6.7.3(2), 7.7.3.1(2), 8.8.2(3), 9.8.3, 11.9.3(2), A.6.7.3(3), A.10.5.2(6), A.10.5.2(7)
Piping
Access to 15.6, A.15.6.5
Aerial devices, breathing-air system 20.2.13.2, 20.2.13.3.2, 20.7.7.2
Air systems 25.2.7, 25.13.3
Auxiliary pumps 17.4, 17.12
Compressed air foam systems 22.5, A.22.5
Fire pumps 16.5.4
Industrial supply pumps 18.5.4
Slip-on fire-fighting modules 15.12, A.15.12.2
Plaster hooks .....*see* Pike poles
Plates ..... 4.10.1, 4.10.2, 12.1.4, A.4.10.2, A.12.1.4.1, D.3(14)
Aerial devices 20.23
Air systems 25.2.11, A.25.2.11.6
Compressed air foam systems 22.8
Definition 3.3.125
Fire pumps 16.13.1.3
Foam proportioning systems 21.9, A.21.9.3
Industrial supply pumps 18.13.1.2
Light mast, power-operated 23.15.3.1
Line voltage electrical system power source 23.4.7
Platforms
On apparatus 15.7, A.15.7.1, A.15.7.3
Elevating .....*see* Elevating platforms
Powered equipment racks 15.4
Definition 3.3.129
Power source
Aerial devices ..... 20.18.7 to 20.18.10
Definition 3.3.127
Electric powered winches 26.3.2
Line voltage electrical systems .....*see* Line voltage circuits, equipment, or systems
Low voltage circuits, equipment, systems and warning devices 13.3, A.13.3
Power supply assembly 23.9, 23.10.1, A.23.9.3
Definition 3.3.128
Power takeoff .....*see* PTO (power takeoff)
Power train
Auxiliary pumps 17.3, A.17.3
Fire pumps 16.4, 16.10.1.2, A.16.4.3, A.16.10.1.2
Industrial supply pumps 18.4, A.18.4.3
Preconnected hose line ..... Fig. B.1.1
Definition 3.3.130, A.3.3.130
Predelivery tests, manufacturer's
Aerial devices 20.25, A.20.25
Compressed air foam systems 22.9, A.22.9
Fire pumps 16.13.8, A.16.3.8
Industrial supply pumps 18.13.7, A.18.13.7
Pressure
Burst .....*see* Burst pressure
Maximum pump close-off (definition) 3.3.104, A.3.3.104
Net pump .....*see* Net pump pressure
Pressure control systems
Fire pumps 16.10.13, 16.12.2, 16.13.4, A.6.10.13
Industrial supply pumps 18.10.13, 18.13.3, A.18.10.13
Pressure gauges .....*see also* Pressure indicating devices
Air booster systems 25.6.2
Air supply regulation 25.2.9.4, 25.7
Air tanks 25.5.8.3
Breathing-air compressors 25.3.6.2, A.25.3.6.2
Hydraulic oil 20.19.4
Pressure vessel foam concentrate or foam solution tanks ... 21.8.8
SCBA 25.9.2

Copyright National Fire Protection Association
Provided by IHS under license with NFPA
No reproduction or networking permitted without license from IHS
Not for Resale

Pressure indicating devices
Auxiliary pumps 17.11
Compressed air foam systems 22.7, A.22.7.6
Fire pumps ..... 16.12.2 to 16.12.4
Foam proportioning systems 21.5
Industrial supply pumps 18.12.1.1, 18.12.1.4, 18.12.2, A.18.12.1.1
Master discharge pressure 16.12.2, 17.11.1, 18.12.1.1, 18.12.3, A.18.12.1.1, A.18.12.3.2
Pressure regulators, air supply 25.7
Breathing-air systems 20.7.7.3.1, 20.13.3.1, 25.13.4
SCBA cylinders 25.9.2
Pressure vessels
Air storage 25.5.1.2
ASME (definition) 3.3.14
Foam concentrate tanks 21.8
Priming devices
Fire pumps 16.10.14, 16.13.5, A.16.10.14
Industrial supply pumps 18.10.14, 18.13.4, A.18.10.14
Procurement of apparatus ..... Annex B
Proper(ly) (definition) 3.3.131
Protection
Auxiliary pump controls and devices 17.8.5
Breathing-air systems 25.13.4
Components 4.11, A.4.11.1
Fire pump controls 16.10.15
Industrial supply pump controls and devices 18.10.15
Line voltage electrical system power source 23.10.1
Personnel 4.9, A.4.9.1
Work lighting 13.10.7
psi (pounds per square inch) (definition) 3.3.132
PTO (power takeoff)
Auxiliary pumps 17.9.1, 17.9.2, A.17.3
Definition 3.3.133
Fire pumps ..... 16.10.1.4, 16.10.2 to 16.10.9, A.16.10.2.1, A.16.10.3.1
Industrial supply pumps ..... 18.10.1.4, 18.10.2 to 18.10.9, A.18.10.2.1, A.18.10.3.1
Line voltage electrical systems 23.6.1, A.23.6.1
Split shaft .....*see* Split shaft PTO
Pulsation-free fire streams 16.5.5, 18.5.5
Pump drive systems .....*see* Engines, used for pumping
Pumper fire apparatus ..... 4.2.1(1), Table 4.2.2, Chap. 5
Definition 3.3.136
Pump operator's panel
Auxiliary pumps 17.7, 17.9.2
Compressed air foam systems, information on 22.8.2, 22.8.3
Definition 3.3.134
Discharge outlets located at 16.7.9, A.16.7.9
Fire pumps 16.9, 16.10.2.3, 16.10.3.3, 16.10.4.1, 16.10.4.3, 16.10.5.1, 16.10.5.3, 16.10.6.1, 16.10.6.3, 16.10.7.1, 16.10.7.5, 16.10.8.3, 16.10.10, 16.10.11, 16.12.1, A.16.9.1, A.16.12.1.1
Foam proportioning systems 21.4.1, A.21.4.1
Industrial supply pumps 18.9, 18.10.2.3, 18.10.3.3, 18.10.4.1, 18.10.4.3, 18.10.5.1, 18.10.5.3, 18.10.6.1, 18.10.6.3, 18.10.7.1, 18.10.7.5, 18.10.8.3, 18.10.9.3, 18.12.1, 18.13.1.2, A.18.9.1, A.18.12.1.1
Pump operator's position
Definition 3.3.135
Fire pumps ..... 16.7.8.1, 16.10.2 to 16.10.5, 16.10.8, 16.10.9, 16.10.13.2.2, 16.11.2, A.16.10.2.1, A.16.10.3.1
Foam proportioning systems 21.8.8, 21.9.3, A.21.9.3
Industrial supply pumps ..... 18.10.2 to 18.10.5, A.18.10.2.1, A.18.10.3.1
Parallel/series control 16.10.12.2, 17.8.3.2, 18.10.12
Pumps
Access 15.6, A.15.6.5
Auxiliary .....*see* Auxiliary pumps
Fire .....*see* Fire pumps
Foam concentrate 21.7, A.21.7
Slip-on fire-fighting module 15.12, A.15.12.2
Submersible ..... A.8.8.2(33)
Transfer .....*see* Industrial supply pumps
Purchaser
Definition 3.3.137
Responsibility of 4.3, A.4.3.1
Purchasing authority (definition) 3.3.138
Purchasing specifications .....*see* Specifications, apparatus
Purification system 25.4, A.25.4.1, A.25.4.3.2
Definition 3.3.139
Purpose of standard 1.2

-Q-

Qualified person (definition) 3.3.140
Quint (fire apparatus) ..... 4.2.1(5), Chap. 9
Definition 3.3.141, A.3.3.141
Requirements ..... Table 4.2.2

-R-

Racks, powered equipment 15.4
Definition 3.3.129
Radio equipment 24.10.2
Radio space 15.2, A.15.2
Ramp breakover angle (definition) 3.3.142
Rated capacity (aerial device) .... 20.3, 20.8, 20.14, A.20.3.4, D.3(16)
Definition 3.3.143
Rated capacity (water pump) 16.2.1, 17.3, 18.2.1
Definition 3.3.144
Readily accessible
Definition 3.3.145
Overcurrent protective devices 13.2.7.1
Tools and equipment 15.3.3
Receptacles, line voltage electrical systems 23.12.5, A.23.12.5
Reels, cord ..... 23.13, A.5.8.3(13), A.6.7.3(15), A.8.8.2(3), A.10.5.2(21), A.23.13
References ..... Chap. 2, Annex F
Reflective material ..... 15.4.7, 15.9.3, 20.18.11(2), 20.21.4.3, A.15.9.3.2, D.3(3)
Remote power distribution box 23.13.8.1
Removable winches 26.3.3
Definition 3.3.146
Repairs 4.15.3
Reserve apparatus ..... Annex D
Reserve capacity (battery) 13.4.2
Definition 3.3.147
Test 13.14.3.2
Retroactivity of standard 1.4, A.1.4
Roadability 4.14, A.4.14
Road spray location (definition) 3.3.148
Road tests 4.16
Rope
Life safety ..... 8.8.2, 9.8.3, A.10.5.2(14), A.10.5.2(15)
Receivers and anchors for 15.11, A.15.11
Utility ... 8.8.2, A.5.8.3(10), A.6.7.3(12), A.7.7.3.1(8), A.10.5.2(16)

-S-

Safety, personnel .....*see* Personnel safety
Salvage covers ..... 5.8.3(16), 8.8.2(14), 9.8.3(17), A.8.8.2(9), A.10.5.2(18)
SCBA .....*see* Self-contained breathing apparatus (SCBA)
SCBA fill hose ..... 25.9.2 to 25.9.4
Definition 3.3.149
SCBA fill station ..... 4.19.1(11), 25.9
Definition 3.3.150
Scene lighting systems 23.14
Scope of standard 1.1, A.1.1
Seat belts ..... 14.1.3, A.14.1.3, D.3(13)

Copyright National Fire Protection Association
Provided by IHS under license with NFPA
No reproduction or networking permitted without license from IHS
Not for Resale

Seating, command center 24.7, A.24.7.1
Self-contained breathing apparatus (SCBA) ..... 5.8.3, 6.7.3, 7.7.3.1, 8.8.2, 9.8.3, 10.5.2, 11.9.3, 25.8.1, 25.8.2, A.10.5.2; *see also* Breathing-air systems
Fill hose ..... 25.9.2 to 25.9.4
Definition 3.3.149
Fill station ..... 4.19.1(11), 25.9
Definition 3.3.150
Mounting of units in driving or crew compartments 14.1.10, A.14.1.10.1
Purchasing specifications ..... Fig. B.1.1
Storage of cylinders 15.5, A.15.5
Horizontal storage 15.5.6, A.15.5.6
Vertical storage in tubes 15.5.5, A.15.5.5
Self-educting master stream nozzles 21.2.2, A.21.2.2
Serviceability 4.15, A.4.15.1
Service brakes 4.16.8, 4.16.9, 12.3.1.3, 12.3.1.4
Shall (definition) 3.2.5
Shields 4.9.1, 20.7.6.6, 23.4.2, A.4.9.1
Shoreline power inlet 23.8.1, A.23.8.1
Should (definition) 3.2.6
Shovels ..... 8.8.2(16), A.5.8.3(8), A.6.7.3(10), A.7.7.3.1(6), A.8.8.2(2), A.10.5.2(11)
Shutdown systems, engine 12.2.1.3, A.12.2.1.3
Signs 4.9.4, 4.10.2, A.4.10.2
Aerial devices 20.18.3, 20.23
Definition 3.3.151
Electrocution hazard, warning of 20.18.3, 20.23.1.2
Fire pumps 16.6.1.3, A.16.6.1.3
Industrial supply pumps 18.6.1.3, A.18.6.1.3
Stepping surfaces 15.7.4
Sledgehammers ..... 8.8.2(7), A.10.5.2(12)
Slip-on fire-fighting module 15.12, A.15.12.2
Slip-resistance ..... 15.7.3, A.15.7.3, D.3(4)
Slow-operating valves 25.7, 25.9.3
Definition 3.3.152
Small apparatus, optical warning device requirements ..... 13.8.14, Table 13.8.14.4, A.13.8.14
Smoke ejectors ..... A.6.7.3(4), A.8.8.2(5), A.10.5.2(22)
Special services fire apparatus ..... 4.2.1(6), Chap. 10
Definition 3.3.153, A.3.3.153
Requirements ..... Table 4.2.2
Specifications, apparatus 4.3.1, A.4.3.1
Guidelines for first line and reserve apparatus ..... Annex D
Purchase specifications and procurement ..... Annex B
Weights and dimensions for common equipment ..... Annex C
Speed, of apparatus 4.14, 4.16.5, 4.16.6, 4.16.8, 4.16.9, A.4.14
Speed, of engine 12.2.1.1, 12.2.1.4, A.12.2.1, A.12.2.1.1, A.12.2.1.4.1, A.12.2.1.4.2
Fire pump 16.3.2
Industrial supply pump 18.3.2, 18.10.10, 18.10.11
Pump operator's panel engine speed advancement 16.10.10, 16.10.11, 18.10.10, 18.10.11
Throttle controls, direct drive (PTO) generators 23.6.1.4, A.23.6.1.4
Throttle controls, pump engine 16.11, 18.11, A.16.11.1, A.18.11.1
Split shaft PTO
Definition 3.3.154
Fire pumps 16.10.1.4, 16.10.2, 16.10.3, A.16.10.2.1, A.16.10.3.1
Industrial supply pumps 18.10.1.4, 18.10.3, A.18.10.3.1
Line voltage electrical systems 23.6.1.5, 23.6.1.7
Sprinkler heads ..... A.8.8.2(16)
Stability, of vehicles 4.12, A.4.12
Stabilizer pads (definition) 3.3.156
Stabilizers 20.13.5, 20.21.1.2, 20.21.4, 20.24.2.3, 20.24.2.8.2, A.20.24.2.7
Definition 3.3.155
Stabilizer shoes (definition) 3.3.157
Standard cubic feet per minute (SCFM)
Definition 3.3.158, A.3.3.158
Starting devices, low voltage electrical systems 13.5
Steering mechanism 12.3.2.5, 12.3.2.6.3
Stepping, standing, and walking surfaces ..... 15.7, A.15.7.1, A.15.7.3, D.3(7)
Stop, tail, and directional lights 13.13
Storage
Air systems 25.5, 25.13.2, A.25.5
Equipment 15.3, 15.4, A.15.3.1, A.15.3.2
Aerial fire apparatus 8.5, A.8.5
Cabinets for 24.8, A.24.8
Initial attack fire apparatus 6.4, A.6.4
Mobile foam fire apparatus 11.6, A.11.6
Mobile water supply fire apparatus 7.4, A.7.4
Pumper fire apparatus 5.5, A.5.5
Quint fire apparatus 9.5, A.9.5
SCBA 15.5, A.15.5
Special service fire apparatus 10.3, A.10.3
Strainers ..... A.7.7.3.1(10)
Suction hose 16.13.2.2.1, 18.2.4.1, 18.13.2.1.1, 18.13.2.2.1, A.18.2.4.1
Aerial fire apparatus A.8.3
Connections 16.6.1.2
Initial attack fire apparatus 6.6.2, A.6.6.2.3
Mobile foam fire apparatus 11.8.1, A.11.8.1.3
Mobile water supply fire apparatus 7.6, 7.7.3.3, A.7.6
Pumper fire apparatus 5.7.2, A.5.7.2.3
Pump intake connections 18.6.1, A.18.6.1
Quint fire apparatus 9.7.2, A.9.7.2.3
Special service fire apparatus 10.4.2, A.10.4.2.3
Suction lift (definition) 3.3.159
Sumps
Definition 3.3.160
Water tanks 19.2.6
Surface lighting 13.10.3
Suspension system, vehicle .... 12.3.2, A.12.3.2.1, A.12.3.2.3, D.3(11)
Swash partitions 21.6.2
Definition 3.3.161
Switches 4.10.1
Definition 3.3.162
High pressure, air booster systems 25.6.3
Line voltage electrical systems 23.12.4, A.23.12.4
Momentary (definition) 3.3.110
Tiller steering wheel driver-operated 14.4.9
Transfer 23.8.2, A.23.8.2.2
Work lighting 13.10.6
Swivel intake connections 5.8.3.2, 6.7.3.1, 7.7.3.2, 8.8.3.3, 9.8.3.2, 11.9.3.2
Synthetic breathing air (definition) ..... 3.3.163; *see also* breathing-air systems

-T-

Tail lights 13.13
Tankers .....*see* Mobile water supply apparatus (tanker, tender)
Tanks
Air .....*see* Air tanks
Atmospheric foam concentrate 21.6, A.21.6
Foam storage 21.3.7, 21.3.9.2, 21.3.9.3
Hydraulic fluid 26.4.3
Portable ..... A.7.7.3.1(10), A.7.7.3.1(12), A.7.7.3.1(13)
Pressure vessel foam concentrate or foam solution 21.8
Water .....*see* Water tanks
Temperature exposure, low voltage electrical systems and warning devices 13.6
Tenders .....*see* Mobile water supply apparatus (tanker, tender)
Tests
Acceptance 4.17, A.4.17.1
Aerial devices .....*see* Aerial devices
Air systems 25.14, A.25.14
Auxiliary pumps 17.12
Certification .....*see* Certification
Compressed air foam systems 22.9, A.22.9
On delivery 4.17, A.4.17.1

Copyright National Fire Protection Association
Provided by IHS under license with NFPA
No reproduction or networking permitted without license from IHS
Not for Resale

Foam proportioning systems ..... 21.11, A.21.11.1(3)
Industrial supply pumps 18.5.2, 18.13, A.18.13
Line voltage electrical systems 23.16, A.23.4.3, A.23.16
Nondestructive 20.22.2, 20.22.5
Optical warning devices 13.8.15
Performance, low voltage electrical systems and warning devices 13.14, A.13.14.1
Predelivery .....*see* Predelivery tests, manufacturer's
Priming device 18.13.4
Road 4.16
SCBA fill station 25.9.5
Stability 4.17.2
Walking surfaces, slip resistance of ..... 15.7.3.1 to 15.7.3.4
Water system, aerial device 20.24.4
Water tanks 16.13.7
Work lighting 13.10.8
Third-party certification of test results 4.7
Tire chains 12.3.2.4
Tires .....*see* Wheels, vehicle
Tool boxes ..... 8.8.2(22), A.5.8.3(15), A.6.7.3(16), A.7.7.3.1(11), A.10.5.2(17)
Tools .....*see also* Equipment
Claw tools ..... 8.8.2(6), A.5.8.3(1), A.6.7.3(2), A.7.7.3.1(1)
Halligan-type tools ..... A.5.8.3(4), A.6.7.3(8), A.7.7.3.1(4), A.10.5.2(10)
Readily accessible 15.3.3
Special 4.15.2
Top rail (definition) 3.3.164
Total continuous electrical load ..... 13.3.6.1, 13.15(2), A.13.3.6.1
Definition 3.3.165
Tow hooks 12.3.5, A.12.3.5
Tractor-drawn vehicles 12.3.2.6
Driving compartment 14.4, A.14.4.3
Training, personnel
Air systems, use of 25.2.13, A.25.2.13.1, A.25.2.13.2
Use, care and maintenance of apparatus and equipment 4.3.2, 4.4.3
Transformers A.23.6.5.1
Transmission, vehicle 12.3.3, A.12.3.3
Auxiliary pump driven through 17.9.1, 17.9.2
Fire pumps driven through ..... 16.10.1.3 to 16.10.1.5, 16.10.2 to 16.10.5, 16.10.2 to 16.10.11, A.16.10.2.1, A.16.10.3.1, D.3(19)
Industrial supply pumps driven through ..... 18.10.1.3, 18.10.1.4, 18.10.2 to 18.10.11, A.18.10.2.1, A.18.10.3.1
Line voltage electrical system power source 23.6.1, A.23.6.1
Turning clearance radius (definition) 3.3.166, A.3.3.166
Turntables
Aerial ladders 20.5.2, A.20.5.2.1
Alignment indicator (definition) 3.3.168
Definition 3.3.167, A.3.3.167
Elevating platform 20.10.3, A.20.10.3.1
Personnel safety 20.18.1, A.20.18.1
Water tower 20.15.3, A.20.15.3.1
Type 4 rating (definition) 3.3.169, A.3.3.169

-U-

Ultimate strength (definition) 3.3.170
Underloading A.12.1
Unequipped apparatus (definition) 3.3.171
Units of measurement 1.6, A.1.6
Utility air (definition) 3.3.172
Utility air systems .....*see also* Air systems
Hose ..... 25.11.4.2(1), 25.11.6, 25.11.8
Low pressure air supply 25.12, A.25.12

-V-

Vacuum tests
Fire pump 16.13.6
Industrial supply pump 18.13.4
Valves
Aerial ladder water delivery system 20.6.1.2, 20.6.1.6, 20.6.1.8, A.20.6.1.8
Air systems 25.2.9.1, 25.2.11.4, 25.2.11.5, 25.13.4
Air supply 25.7
Air tank 25.5.8
Booster systems 25.6, A.25.6
Breathing-air systems 20.2.13.2.3, 20.2.13.2.4, 20.2.13.3.1, 20.7.7.2.3, 20.7.7.3.1
Discharge .....*see* Discharge valves
Drain .....*see* Drain valves
Dump (definition) 3.3.54
Elevating platform water delivery system 20.12.3.4, 20.12.8, 20.12.9.1, A.20.12.3.4, A.20.12.9.1
Intake .....*see* Intake valves
Line 25.6.1
Pressure protection valve (PPV) 25.12.2, A.25.12.2
Pressure regulator 25.4.7
Pump 16.5.4, 17.4, 17.8.4, 17.8.6, 17.8.7, 17.12, 18.5.3, 18.5.4, 18.7.3, 18.7.5, 18.7.6, 18.7.8, 18.8, A.18.7.3, A.18.7.5.2
see also Discharge valves; Intake valves
Relief
Air supply 25.7
Auxiliary pumps 17.8.4
Breathing-air system 25.3.4, 25.4.4
Compressed air foam systems 22.3.2
Elevating platform water delivery system 20.12.8
Pressure vessel foam concentrate or foam solution tanks 21.8.6
Water tower water delivery system 20.16.8
Safety 25.6.3
Slow-operating 25.7, 25.9.3
Definition 3.3.152
Water tower water delivery system 20.16.6, 20.16.8, 20.16.9, A.20.16.9
Vents
Foam tanks 21.6.4
Pressure vessel foam concentrate or foam solution tanks 21.8.4.3, 21.8.5
Water tank 19.4, A.19.4
Vibration isolation (definition) 3.3.173
Video equipment 24.12
Visual warnings .....*see* Optical warning devices

-W-

Walls, command area 24.9, A.24.9.1
Warning lights .....*see* Indicators
Warning signs .....*see* Labels
Warning systems .....*see also* Audible warning devices; Indicators; Low voltage circuits, equipment, systems, and warning devices; Optical warning devices
Air systems 20.2.13.5, 20.7.7.5, 25.13.7
Electrical system 13.3.4, A.13.3.4
Engine 12.2.1.2
Tractor-drawn vehicles 12.3.2.6.4, 14.4.4
Water curtain system 20.7.6.7
Water delivery systems
Aerial ladder 20.6, A.20.6
Elevating platform 20.12, A.20.12
Water tower 20.16, A.20.16.5, A.20.16.9
Water-powered direct injection foam proportioning systems 21.2.7, A.21.2.7
Water system test, aerial device 20.24.4
Water tanks ..... 4.5.4, Chap. 19, D.3(18)
Aerial fire apparatus 8.4, 8.6.2
Auxiliary pumps 17.6.5
Contractor's documentation ..... 4.19.1(1)(p), 4.19.1(14)
Filling 19.4, A.19.4
Foam system 21.3.9.2, 21.3.9.3
Initial attack fire apparatus 6.3
Instruments and controls 16.12.1.1, A.16.12.1.1

Copyright National Fire Protection Association
Provided by IHS under license with NFPA
No reproduction or networking permitted without license from IHS
Not for Resale

Mobile water supply fire apparatus 7.3
Pumper fire apparatus 5.4, A.5.4
Quint fire apparatus 9.4
Size A.12.1
Slip-on fire-fighting module 15.12, A.15.12.2
Tests 16.13.1.1.2, 16.13.1.2.2, 16.13.7, 18.13.6
Water towers 20.13
Definition 3.3.174
Operating mechanisms 20.15, A.20.15.3.1
Purchasing specifications ..... Fig. B.1.1
Rated capacity 20.14
Stability 20.13.5, 20.24.2.6, 20.24.2.8.4
Turntable 20.15.3, A.20.15.3.1
Water delivery system 20.16, A.20.16.5, A.20.16.9
Water transfer, from water tanks ..... 19.5.2, A.7.7.3.1(12), A.19.5.2
Weight
Equipment on vehicle ..... Annex C
Slip-on fire-fighting module 15.12.2, A.15.12.2
Vehicle ..... 4.12, 4.12.2, 12.1, A.12.1, D.3(15)
Contractor's documentation ..... 4.19.1(1), 4.19.1(12)
Tires, load of 4.12.2.3.3, 12.3.2.1, A.4.12.2.3.3, A.12.3.2.1
Welds, aerial devices 20.22.3, 20.22.4
Wet locations
Definition 3.3.175
Receptacles and electrical inlet devices ... 23.12.5.1, A.23.12.5.1.1, A.23.12.5.1.3
Wheel chocks ..... 5.8.3(17), 6.7.3(14), 7.7.3.1(13), 8.8.2(23), 9.8.3(21), 10.5.2(7), 11.9.3(13)
Wheels, vehicle ..... 12.3.2, A.12.3.2.1, A.12.3.2.3, D.3(11)
Winches ..... 4.5.11, 15.11, Chap. 26, A.15.11, Fig. B.1.1
Wire cutters ..... A.8.8.2(8)
Wiring
In compartments 15.1.2
Line voltage electrical systems 23.11, 23.12, A.23.11, A.23.12
Low voltage circuits, equipment, systems, and warning devices 13.2, A.13.2.1, A.13.2.6
Portable generators 23.7.3
Working surfaces, command area 24.6, A.24.6.1
Work lighting ..... 13.10, A.8.8.2(1), D.3(7)
Wrenches ..... 5.8.3, 6.7.3, 7.7.3.1, 8.8.2, 8.8.3.1(4), 9.8.3, 11.9.3, A.8.8.2(32), A.8.8.2(40), A.10.5.2(38)

-Y-

Yield strength (definition) 3.3.176

Copyright National Fire Protection Association
Provided by IHS under license with NFPA
No reproduction or networking permitted without license from IHS
Not for Resale

Sequence of Events Leading to Publication of an NFPA Committee Document

Call goes out for proposals to amend existing document or for recommendations on new document.

▼

Committee meets to act on proposals, to develop its own proposals, and to prepare its report.

▼

Committee votes on proposals by letter ballot. If two-thirds approve, report goes forward. Lacking two-thirds approval, report returns to committee.

▼

Report — *Report on Proposals* (ROP) — is published for public review and comment.

▼

Committee meets to act on each public comment received.

▼

Committee votes on comments by letter ballot. If two-thirds approve, supplementary report goes forward. Lacking two-thirds approval, supplementary report returns to committee.

▼

Supplementary report — *Report on Comments* (ROC) — is published for public review.

▼

NFPA membership meets (Annual or Fall Meeting) and acts on committee report (ROP or ROC).

▼

Committee votes on any amendments to report approved at NFPA Annual or Fall Meeting.

▼

Appeals to Standards Council on Association action must be filed within 20 days of the NFPA Annual or Fall Meeting.

▼

Standards Council decides, based on all evidence, whether or not to issue standard or to take other action, including upholding any appeals.

Committee Membership Classifications

The following classifications apply to Technical Committee members and represent their principal interest in the activity of the committee.

M *Manufacturer:* A representative of a maker or marketer of a product, assembly, or system, or portion thereof, that is affected by the standard.

U *User:* A representative of an entity that is subject to the provisions of the standard or that voluntarily uses the standard.

I/M *Installer/Maintainer:* A representative of an entity that is in the business of installing or maintaining a product, assembly, or system affected by the standard.

L *Labor:* A labor representative or employee concerned with safety in the workplace.

R/T *Applied Research/Testing Laboratory:* A representative of an independent testing laboratory or independent applied research organization that promulgates and/or enforces standards.

E *Enforcing Authority:* A representative of an agency or an organization that promulgates and/or enforces standards.

I *Insurance:* A representative of an insurance company, broker, agent, bureau, or inspection agency.

C *Consumer:* A person who is, or represents, the ultimate purchaser of a product, system, or service affected by the standard, but who is not included in the *User* classification.

SE *Special Expert:* A person not representing any of the previous classifications, but who has a special expertise in the scope of the standard or portion thereof.

NOTES:

1. "Standard" connotes code, standard, recommended practice, or guide.
2. A representative includes an employee.
3. While these classifications will be used by the Standards Council to achieve a balance for Technical Committees, the Standards Council may determine that new classifications of members or unique interests need representation in order to foster the best possible committee deliberations on any project. In this connection, the Standards Council may make such appointments as it seems appropriate in the public interest, such as the classification of "Utilities" in the National Electrical Code Committee.
4. Representatives of subsidiaries of any group are generally considered to have the same classification as the parent organization.

Copyright National Fire Protection Association
Provided by IHS under license with NFPA
No reproduction or networking permitted without license from IHS
Not for Resale

NFPA Technical Committee Document Proposal Form

Note: All proposals must be received by 5:00 p.m. EST/EDST on the published proposal closing date.

For further information on the standards-making process, please contact Codes and Standards Administration at 617-984-7249. For technical assistance, please call NFPA at 617-770-3000.

FOR OFFICE USE ONLY
Log #: _____
Date Rec'd: _____

Please indicate in which format you wish to receive your ROP/ROC: ☐ **CD ROM** ☐ **paper** ☐ **download**
(Note: In choosing the download option you intend to view the ROP/ROC from our Website. No copy will be sent to you.)

Date 12/18/02 **Name** John B. Smith **Telephone** 617-555-1212
Company _____
Address 9 Seattle St. **City** Seattle **State** WA **Zip** 02255
Please indicate organization represented (if any) Fire Marshals Assn. of North America

1. **a) NFPA Document Title** National Fire Alarm Code
   b) NFPA No. & Edition NFPA 72, 2002 ed. **c) Section/Paragraph** 4.4.7.1.1

2. **Proposal Recommends:** *(check one)* ☐ **new text** ☐ **revised text** ☒ **deleted text**

3. **Proposal.** *(Include proposed new or revised wording, or identification of wording to be deleted.)* Note: Proposed text should be in legislative format, that is, use underscore to denote wording to be inserted (inserted wording) and strike-through to denote wording to be deleted (~~deleted wording~~). Delete exception.

4. **Statement of Problem and Substantiation for Proposal.** Note: State the problem that will be resolved by your recommendation. Give the specific reason for your proposal including copies of tests, research papers, fire experience, etc. If more than 200 words, it may be abstracted for publication. A properly installed and maintained system should be free of ground faults. The occurrence of one or more ground faults should be required to cause a "trouble" signal because it indicates a condition that could contribute to future malfunction of the system. Ground fault protection has been widely available on these systems for years and its cost is negligible. Requiring it on all systems will promote better installations, maintenance and reliability.

5. ☒ **This Proposal is Original Material.** Note: Original material is considered to be the submitter's own idea based on or as a result of his/her own experience, thought, or research and, to the best of his/her knowledge, is not copied from another source.

   ☐ **This Proposal is Not Original Material; Its Source** ***(if known)*** **is as Follows:** _____

Sample

I hereby grant the NFPA all and full rights in copyright to this proposal, and I understand that I acquire no rights in any publication of NFPA in which this proposal in this or another similar or analogous form is used.

Signature ***(Required)*** John B. Smith

PLEASE USE SEPARATE FORM FOR EACH PROPOSAL • NFPA FAX (617) 770-3500

Mail to: Secretary, Standards Council • NFPA • 1 Batterymarch Park • PO Box 9101 • Quincy, MA 02269-9101

Copyright National Fire Protection Association
Provided by IHS under license with NFPA
No reproduction or networking permitted without license from IHS
Not for Resale

NFPA Technical Committee Document Proposal Form

Note: All proposals must be received by 5:00 p.m. EST/EDST on the published proposal closing date.

For further information on the standards-making process, please contact Codes and Standards Administration at 617-984-7249. For technical assistance, please call NFPA at 617-770-3000.

FOR OFFICE USE ONLY
Log #: _____
Date Rec'd: _____

Please indicate in which format you wish to receive your ROP/ROC: ☐ **CD ROM** ☐ **paper** ☐ **download**
(Note: In choosing the download option you intend to view the ROP/ROC from our Website. No copy will be sent to you.)

Date _____ **Name** _____ **Telephone** _____
Company _____
Address _____ **City** _____ **State** _____ **Zip** _____
Please indicate organization represented (if any) _____

1. **a) NFPA Document Title** _____
   b) NFPA No. & Edition _____ **c) Section/Paragraph** _____

2. **Proposal Recommends:** *(check one)* ☐ **new text** ☐ **revised text** ☐ **deleted text**

3. **Proposal.** *(Include proposed new or revised wording, or identification of wording to be deleted.)* Note: Proposed text should be in legislative format, that is, use underscore to denote wording to be inserted (inserted wording) and strike-through to denote wording to be deleted (~~deleted wording~~). _____

4. **Statement of Problem and Substantiation for Proposal.** Note: State the problem that will be resolved by your recommendation. Give the specific reason for your proposal including copies of tests, research papers, fire experience, etc. If more than 200 words, it may be abstracted for publication. _____

5. ☐ **This Proposal is Original Material.** Note: Original material is considered to be the submitter's own idea based on or as a result of his/her own experience, thought, or research and, to the best of his/her knowledge, is not copied from another source.

   ☐ **This Proposal is Not Original Material; Its Source *(if known)* is as Follows:** _____

I hereby grant the NFPA all and full rights in copyright to this proposal, and I understand that I acquire no rights in any publication of NFPA in which this proposal in this or another similar or analogous form is used.

Signature *(Required)* _____

PLEASE USE SEPARATE FORM FOR EACH PROPOSAL • NFPA FAX (617) 770-3500

Mail to: Secretary, Standards Council • NFPA • 1 Batterymarch Park • PO Box 9101 • Quincy, MA 02269-9101

Copyright National Fire Protection Association
Provided by IHS under license with NFPA
No reproduction or networking permitted without license from IHS
Not for Resale