NFPA 18A

Standard on Water Additives for Fire Control and Vapor Mitigation

2007 Edition

NFPA, 1 Batterymarch Park, Quincy, MA 02169-7471
An International Codes and Standards Organization

--`,,```,,,,````-`-`,,`,,`,`,,`---

Copyright National Fire Protection Association
Provided by IHS under license with NFPA
No reproduction or networking permitted without license from IHS

Not for Resale

IMPORTANT NOTICES AND DISCLAIMERS CONCERNING NFPA DOCUMENTS

NOTICE AND DISCLAIMER OF LIABILITY CONCERNING THE USE OF NFPA DOCUMENTS

NFPA codes, standards, recommended practices, and guides, of which the document contained herein is one, are developed through a consensus standards development process approved by the American National Standards Institute. This process brings together volunteers representing varied viewpoints and interests to achieve consensus on fire and other safety issues. While the NFPA administers the process and establishes rules to promote fairness in the development of consensus, it does not independently test, evaluate, or verify the accuracy of any information or the soundness of any judgments contained in its codes and standards.

The NFPA disclaims liability for any personal injury, property or other damages of any nature whatsoever, whether special, indirect, consequential or compensatory, directly or indirectly resulting from the publication, use of, or reliance on this document. The NFPA also makes no guaranty or warranty as to the accuracy or completeness of any information published herein.

In issuing and making this document available, the NFPA is not undertaking to render professional or other services for or on behalf of any person or entity. Nor is the NFPA undertaking to perform any duty owed by any person or entity to someone else. Anyone using this document should rely on his or her own independent judgment or, as appropriate, seek the advice of a competent professional in determining the exercise of reasonable care in any given circumstances.

The NFPA has no power, nor does it undertake, to police or enforce compliance with the contents of this document. Nor does the NFPA list, certify, test or inspect products, designs, or installations for compliance with this document. Any certification or other statement of compliance with the requirements of this document shall not be attributable to the NFPA and is solely the responsibility of the certifier or maker of the statement.

Copyright National Fire Protection Association
Provided by IHS under license with NFPA
No reproduction or networking permitted without license from IHS
Not for Resale

ADDITIONAL NOTICES AND DISCLAIMERS

Updating of NFPA Documents

Users of NFPA codes, standards, recommended practices, and guides should be aware that these documents may be superseded at any time by the issuance of new editions or may be amended from time to time through the issuance of Tentative Interim Amendments. An official NFPA document at any point in time consists of the current edition of the document together with any Tentative Interim Amendments and any Errata then in effect. In order to determine whether a given document is the current edition and whether it has been amended through the issuance of Tentative Interim Amendments or corrected through the issuance of Errata, consult appropriate NFPA publications such as the National Fire Codes® Subscription Service, visit the NFPA website at www.nfpa.org, or contact the NFPA at the address listed below.

Interpretations of NFPA Documents

A statement, written or oral, that is not processed in accordance with Section 6 of the Regulations Governing Committee Projects shall not be considered the official position of NFPA or any of its Committees and shall not be considered to be, nor be relied upon as, a Formal Interpretation.

Patents

The NFPA does not take any position with respect to the validity of any patent rights asserted in connection with any items which are mentioned in or are the subject of NFPA codes, standards, recommended practices, and guides, and the NFPA disclaims liability for the infringement of any patent resulting from the use of or reliance on these documents. Users of these documents are expressly advised that determination of the validity of any such patent rights, and the risk of infringement of such rights, is entirely their own responsibility.

NFPA adheres to applicable policies of the American National Standards Institute with respect to patents. For further information contact the NFPA at the address listed below.

Law and Regulations

Users of these documents should consult applicable federal, state, and local laws and regulations. NFPA does not, by the publication of its codes, standards, recommended practices, and guides, intend to urge action that is not in compliance with applicable laws, and these documents may not be construed as doing so.

Copyrights

This document is copyrighted by the NFPA. It is made available for a wide variety of both public and private uses. These include both use, by reference, in laws and regulations, and use in private self-regulation, standardization, and the promotion of safe practices and methods. By making this document available for use and adoption by public authorities and private users, the NFPA does not waive any rights in copyright to this document.

Use of NFPA documents for regulatory purposes should be accomplished through adoption by reference. The term "adoption by reference" means the citing of title, edition, and publishing information only. Any deletions, additions, and changes desired by the adopting authority should be noted separately in the adopting instrument. In order to assist NFPA in following the uses made of its documents, adopting authorities are requested to notify the NFPA (Attention: Secretary, Standards Council) in writing of such use. For technical assistance and questions concerning adoption of NFPA documents, contact NFPA at the address below.

For Further Information

All questions or other communications relating to NFPA codes, standards, recommended practices, and guides and all requests for information on NFPA procedures governing its codes and standards development process, including information on the procedures for requesting Formal Interpretations, for proposing Tentative Interim Amendments, and for proposing revisions to NFPA documents during regular revision cycles, should be sent to NFPA headquarters, addressed to the attention of the Secretary, Standards Council, NFPA, 1 Batterymarch Park, P.O. Box 9101, Quincy, MA 02269-9101.

For more information about NFPA, visit the NFPA website at www.nfpa.org.

Copyright National Fire Protection Association
Provided by IHS under license with NFPA
No reproduction or networking permitted without license from IHS
Not for Resale

Copyright © 2007 National Fire Protection Association. All Rights Reserved.

NFPA 18A

Standard on

Water Additives for Fire Control and Vapor Mitigation

2007 Edition

This edition of NFPA 18A, *Standard on Water Additives for Fire Control and Vapor Mitigation,* was prepared by the Technical Committee on Water Additives for Fire Control and Vapor Mitigation. It was issued by the Standards Council on December 1, 2006, with an effective date of December 20, 2006.

This edition of NFPA 18A was approved as an American National Standard on December 20, 2006.

Origin and Development of NFPA 18A

In 1998, the NFPA Standards Council approved the formation of the Technical Committee on Water Additives for Fire Control and Vapor Mitigation. The committee was tasked with having primary responsibility for documents on the manufacture, testing, application, and use of water additives for the control and/or suppression of fire and flammable vapor mitigation, including water additives used to prevent or reduce the spread of fire and the use of water additives in fixed, semi-fixed, mobile, and portable fire suppression systems. The standard they were given was NFPA 18, *Wetting Agents.*

Initially, the committee proposed to combine wetting agents and water additives under one standard. This effort was returned to the committee by Association action in June 2003. As a result, the committee decided to divide this work into two subject areas and standards, retaining and revising NFPA 18 and creating a new standard addressing water additives, NFPA 18A.

--`,,```,,,,````-`-`,,`,,`,`,,`---

Copyright National Fire Protection Association
Provided by IHS under license with NFPA
No reproduction or networking permitted without license from IHS
Not for Resale

Technical Committee on Water Additives for Fire Control and Vapor Mitigation

Armand V. Brandao, *Chair*
FM Approvals, RI [I]
Rep. FM Global

Michael T. Greiner, *Secretary*
Hazard Control Technologies, Incorporated, GA [M]

Paul E. Caron, Paul E. Caron Associates, MA [SE]
Dominic J. Colletti, Hale Products, Incorporated, PA [M]
Rep. Fire Apparatus Manufacturers Association
James M. Figueira, Environmental Chemical Solutions, CA [M]
Charles W. George, IFSC Consultants, MT [SE]
Christopher P. Hanauska, Hughes Associates, Incorporated, MD [SE]
Mitchell Hubert, Tyco International/Ansul Incorporated, WI [M]
Rep. Fire Suppression Systems Association
Cecilia W. Johnson, U.S.D.A. Forest Service, MT [RT]
George E. Laverick, Underwriters Laboratories Incorporated, IL [RT]
Robert E. Tinsley, Jr., Pyrocool Technologies, Incorporated, VA [M]
Howard L. Vandersall, Lawdon Fire Services, Incorporated, CA [SE]
Rep. TC on Forest and Rural Fire Protection
Joseph A. Wright, ARFF Technical Services, Incorporated, PA [SE]

Alternates

Robert R. Carter, Hazard Control Technologies Canada, Canada [M]
(Alt. to M. T. Greiner)
James Devonshire, Buckeye Fire Equipment Company, TX [M]
Rep. Fire Suppression Systems Association
(Alt. to M. Hubert)
George Unger, Underwriters' Laboratories of Canada, Canada [RT]
(Alt. to G. E. Laverick)
Bennie Vincent, FM Global, MA [I]
(Alt. to A. V. Brandao)

James D. Lake, NFPA Staff Liaison

This list represents the membership at the time the Committee was balloted on the final text of this edition. Since that time, changes in the membership may have occurred. A key to classifications is found at the back of the document.

NOTE: Membership on a committee shall not in and of itself constitute an endorsement of the Association or any document developed by the committee on which the member serves.

Committee Scope: This Committee shall have primary responsibility for documents on the manufacture, testing, application, and use of water additives for the control and/or suppression of fire and flammable vapor mitigation including water additives used to prevent or reduce the spread of fire and the use of water additives in fixed, semi-fixed, mobile, and portable fire suppression systems.

Copyright National Fire Protection Association
Provided by IHS under license with NFPA
No reproduction or networking permitted without license from IHS
Not for Resale

Contents

Chapter 1 Administration **18A–** 4
1.1 Scope **18A–** 4
1.2 Purpose **18A–** 4
1.3 Application **18A–** 4
1.4 Retroactivity **18A–** 4
1.5 Equivalency **18A–** 4
1.6 Units and Formulas **18A–** 4

Chapter 2 Referenced Publications **18A–** 4
2.1 General **18A–** 4
2.2 NFPA Publications **18A–** 4
2.3 Other Publications **18A–** 4
2.4 References for Extracts in Mandatory Sections **18A–** 5

Chapter 3 Definitions **18A–** 5
3.1 General **18A–** 5
3.2 NFPA Official Definitions **18A–** 5
3.3 General Definitions **18A–** 5

Chapter 4 Uses and Limitations **18A–** 6
4.1 General **18A–** 6
4.2 Limitations **18A–** 6
4.3 Compatibility of Water Additives **18A–** 6
4.4 Concentrations **18A–** 6

Chapter 5 Properties and General Test Protocols **18A–** 6
5.1 General **18A–** 6
5.2 Water Additives **18A–** 7
5.3 Intergranular Corrosion Test **18A–**10
5.4 Grain Boundary Attack **18A–**10
5.5 Separation on Standing **18A–**10
5.6 Compatibility with Nonmetallic Materials **18A–**10
5.7 Biodegradability **18A–**11
5.8 Flash Point **18A–**11
5.9 Wood Panel Fire **18A–**11
5.10 Wood Crib Fire **18A–**11

Chapter 6 Reserved **18A–**11

Chapter 7 Class B Fire Test Methods **18A–**11
7.1 General **18A–**11
7.2 Spill Fire Test **18A–**11
7.3 Pool Fire Test **18A–**12
7.4 Three-Dimensional Fuel Fire Test **18A–**13
7.5 Polar Solvents Fire Test. (Reserved) **18A–**14
7.6 Vapor Mitigation Test **18A–**14
7.7 Fuel in Depth Fire Test **18A–**14

Chapter 8 Packaging and Labeling **18A–**14
8.1 Packaging **18A–**14
8.2 Labeling **18A–**14

Chapter 9 Supply **18A–**15
9.1 System Requirements **18A–**15
9.2 Fire Department Supply Requirements ... **18A–**15
9.3 Fixed Systems **18A–**15

Chapter 10 Inspection, Testing, and Maintenance of Fixed Systems **18A–**15
10.1 Fixed Extinguishing Systems **18A–**15
10.2 Inspection of Water Additive Concentrate **18A–**15

Annex A Explanatory Material **18A–**15

Annex B Residual Fire Retardancy **18A–**17

Annex C ICAL Radiant Panel Test for Exposure Protection **18A–**18

Annex D Three-Dimensional Fire Test Apparatus **18A–**19

Annex E Informational References **18A–**19

Index **18A–**23

Copyright National Fire Protection Association
Provided by IHS under license with NFPA
No reproduction or networking permitted without license from IHS
Not for Resale

NFPA 18A

Standard on

Water Additives for Fire Control and Vapor Mitigation

2007 Edition

IMPORTANT NOTE: This NFPA document is made available for use subject to important notices and legal disclaimers. These notices and disclaimers appear in all publications containing this document and may be found under the heading "Important Notices and Disclaimers Concerning NFPA Documents." They can also be obtained on request from NFPA or viewed at www.nfpa.org/disclaimers.

NOTICE: An asterisk (*) following the number or letter designating a paragraph indicates that explanatory material on the paragraph can be found in Annex A.

A reference in brackets [ ] following a section or paragraph indicates material that has been extracted from another NFPA document. As an aid to the user, the complete title and edition of the source documents for extracts in mandatory sections of the document are given in Chapter 2 and those for extracts in informational sections are given in Annex E. Editorial changes to extracted material consist of revising references to an appropriate division in this document or the inclusion of the document number with the division number when the reference is to the original document. Requests for interpretations or revisions of extracted text shall be sent to the technical committee responsible for the source document.

Information on referenced publications can be found in Chapter 2 and Annex E.

Chapter 1 Administration

1.1 Scope. This standard provides the minimum requirements for water additives used for the control and/or suppression of fire and mitigation of flammable vapors.

1.2 Purpose. This standard is intended for the use and guidance of those responsible for purchasing, testing, listing, and using water additives.

1.3* Application. This standard applies to water additives utilized in preventing or reducing the spread of fire.

1.4 Retroactivity. The provisions of this standard reflect a consensus of what is necessary to provide an acceptable degree of protection from the hazards addressed in this standard at the time the standard was issued.

1.4.1 Unless otherwise specified, the provisions of this standard shall not apply to facilities, equipment, structures, or installations that existed or were approved for construction or installation prior to the effective date of the standard. Where specified, the provisions of this standard shall be retroactive.

1.4.2 In those cases where the authority having jurisdiction determines that the existing situation presents an unacceptable degree of risk, the authority having jurisdiction shall be permitted to apply retroactively any portions of this standard deemed appropriate.

1.4.3 The retroactive requirements of this standard shall be permitted to be modified if their application clearly would be impractical in the judgment of the authority having jurisdiction, and only where it is clearly evident that a reasonable degree of safety is provided.

1.5 Equivalency. Nothing in this standard is intended to prevent the use of systems, methods, or devices of equivalent or superior quality, strength, fire resistance, effectiveness, durability, and safety over those prescribed by this standard.

1.5.1 Technical documentation shall be submitted to the authority having jurisdiction to demonstrate equivalency.

1.5.2 The system, method, or device shall be approved for the intended purpose by the authority having jurisdiction.

1.6 Units and Formulas. The primary system of measurement for this standard is the International System of Units (SI). Inch-pound units are provided where necessary and applicable.

Chapter 2 Referenced Publications

2.1 General. The documents or portions thereof listed in this chapter are referenced within this standard and shall be considered part of the requirements of this document.

2.2 NFPA Publications. National Fire Protection Association, 1 Batterymarch Park, Quincy, MA 02169-7471.

NFPA 13, *Standard for the Installation of Sprinkler Systems,* 2007 edition.

NFPA 14, *Standard for the Installation of Standpipe and Hose Systems,* 2007 edition.

NFPA 15, *Standard for Water Spray Fixed Systems for Fire Protection,* 2007 edition.

NFPA 25, *Standard for the Inspection, Testing, and Maintenance of Water-Based Fire Protection Systems,* 2002 edition.

NFPA 1901, *Standard for Automotive Fire Apparatus,* 2003 edition.

2.3 Other Publications.

2.3.1 ASTM Publications. ASTM International, 100 Barr Harbor Drive, P.O. Box C700, West Conshohocken, PA 19428-2959.

ASTM D 92, *Method of Test for Flash and Fire Points by Cleveland Open Cup,* 2005.

ASTM D 97, *Standard Test Method for Pour Point of Petroleum Products,* 2002.

ASTM E 729, *Standard Guide for Conducting Acute Toxicity Tests on Test Materials with Fishes, Macroinvertebrates, and Amphibians,* 1996.

ASTM G1–03, *Standard Practice for Preparing, Cleaning, and Evaluating Corrosion Test Specimens,* 2003.

ASTM G31–72, *Standard Practice for Laboratory Immersion Corrosion Testing of Metals,* 2004.

2.3.2 ISO Publications. International Organization for Standardization, 1 rue de Varembé, Case postale 56, CH-1211, Genève 20, Switzerland.

ISO/IEC 17025, *General requirements for the competence of testing and calibration laboratories,* 2005.

2.3.3 NACE Publications. NACE International, 1440 South Creek Drive, Houston, TX 77084-4906.

NACE TM0169, *Standard Test Method – Laboratory Corrosion Testing of Metals*, 2000.

--`,,```,,,,````-`-`,,`,,`,`,,`---

Copyright National Fire Protection Association
Provided by IHS under license with NFPA
No reproduction or networking permitted without license from IHS

Not for Resale

2.3.4 UL Publications. Underwriters Laboratories, Inc., 333 Pfingsten Road, Northbrook, IL 60062-2096.

UL 162, *Foam Equipment and Liquid Concentrates*, 1994.

UL 711/ULC S508, *Rating and Fire Testing of Fire Extinguishers*, 2004.

2.3.5 ULC Publications. Underwriters' Laboratories of Canada, 7 Crouse Road, Toronto ON M1R 3A9.

ULC S560, *Category 3 Aqueous Film-Forming Foam (AFFF) Liquid Concentrates*, 1998.

2.3.6 U.S. EPA Publications. Environmental Protection Agency, National Service Center for Environmental Publications (NSCEP), P.O. Box 42419, Cincinnati, OH 45242.

OPPTS 835.3110, *Ready Biodegradability*, Section M, CO_2 *Evolution (Modified Sturm) Test,* Fate, Transport and Transformation Test Guidelines, January 1998.

OPPTS 850.1075, *Fish Acute Toxicity Test, Freshwater and Marine,* Ecological Effects Test Guidelines, 1996.

OPPTS 870.1100, *Acute Oral Toxicity,* Health Effects Test Guidelines, 1998.

OPPTS 870.1200, *Acute Dermal Toxicity,* Health Effects Test Guidelines, 1998.

OPPTS 870.2400, *Acute Eye Irritation,* Health Effects Test Guidelines, 1998.

OPPTS 870.2500, *Acute Dermal Irritation,* Health Effects Test Guidelines, 1998.

2.3.7 U.S. Government Publications. U.S. Government Printing Office, Washington, DC 20402.

Title 40, Code of Federal Regulations, Part 86.113-94, Air Programs, "Fuel Specifications."

Title 40, Code of Federal Regulations, Part 160, Pesticide Programs, "Good Laboratory Practice."

Title 40, Code of Federal Regulations, Part 792, Toxic Substances Control Act, "Good Laboratory Practice."

Federal Test Standard No. 601, Methods 3021 and 3025 (April 12, 1985).

2.3.8 Other Publications. *Merriam-Webster's Collegiate Dictionary,* 11th edition, Merriam-Webster, Inc., Springfield, MA, 2003.

2.4 References for Extracts in Mandatory Sections.

NFPA 10, *Standard for Portable Fire Extinguishers,* 2007 edition.

NFPA 36, *Standard for Solvent Extraction Plants,* 2004 edition.

NFPA 1145, *Guide for the Use of Class A Foams in Manual Structural Fire Fighting,* 2006 edition.

NFPA 1150, *Standard on Foam Chemicals for Fires in Class A Fuels,* 2004 edition.

Chapter 3 Definitions

3.1 General. The definitions contained in this chapter shall apply to the terms used in this standard. Where terms are not defined in this chapter or within another chapter, they shall be defined using their ordinarily accepted meanings within the context in which they are used. *Merriam-Webster's Collegiate Dictionary,* 11th edition, shall be the source for the ordinarily accepted meaning.

3.2 NFPA Official Definitions.

3.2.1* Approved. Acceptable to the authority having jurisdiction.

3.2.2* Authority Having Jurisdiction (AHJ). An organization, office, or individual responsible for enforcing the requirements of a code or standard, or for approving equipment, materials, an installation, or a procedure.

3.2.3 Labeled. Equipment or materials to which has been attached a label, symbol, or other identifying mark of an organization that is acceptable to the authority having jurisdiction and concerned with product evaluation, that maintains periodic inspection of production of labeled equipment or materials, and by whose labeling the manufacturer indicates compliance with appropriate standards or performance in a specified manner.

3.2.4* Listed. Equipment, materials, or services included in a list published by an organization that is acceptable to the authority having jurisdiction and concerned with evaluation of products or services, that maintains periodic inspection of production of listed equipment or materials or periodic evaluation of services, and whose listing states that either the equipment, material, or service meets appropriate designated standards or has been tested and found suitable for a specified purpose.

3.2.5 Shall. Indicates a mandatory requirement.

3.2.6 Standard. A document, the main text of which contains only mandatory provisions using the word "shall" to indicate requirements and which is in a form generally suitable for mandatory reference by another standard or code or for adoption into law. Nonmandatory provisions shall be located in an appendix or annex, footnote, or fine-print note and are not to be considered a part of the requirements of a standard.

3.3 General Definitions.

3.3.1 Application Rate. Amount of water additive solution applied over a specified period of time.

3.3.2 Biodegradability. A measure of the decomposition of organic matter through the action of microorganisms. [**1150**, 2004]

3.3.3 Class A Fire. A fire in ordinary combustible materials, such as wood, cloth, paper, rubber, and many plastics. [**10**, 2007]

3.3.4* Class B Fire. A fire in flammable liquids, combustible liquids, petroleum greases, tars, oils, oil-based paints, solvents, lacquers, alcohols, and flammable gases. [**10**, 2007]

3.3.5 Combustible Liquid. Any liquid that has a closed-cup flash point at or above 37.8°C (100°F).

3.3.6* Concentration. The percent of water additive concentrate contained in a water additive solution.

3.3.7* Demulsification. A process either physical or chemical by which an emulsion is broken down to its original constituents.

3.3.8* Discharge Device. A device designed to discharge water or foam-water solution or water additive solution in a predetermined, fixed, or adjustable pattern.

3.3.9 Eductor (Inductor). A device that uses the Venturi principle to introduce a proportionate quantity of water additive concentrate into a water stream; the pressure at the throat is below atmospheric pressure and will draw in liquid from atmospheric storage.

Copyright National Fire Protection Association
Provided by IHS under license with NFPA
No reproduction or networking permitted without license from IHS
Not for Resale

3.3.10 Emulsification. The process of forming an emulsion. *(See also 3.3.12, Emulsion.)*

3.3.11 Emulsifier. A chemical or mixture of chemicals that along with some energy input promotes the formation of an emulsion.

3.3.12* Emulsion. A heterogeneous system, consisting of at least one immiscible liquid dispersed in another in the form of droplets.

3.3.13* Fixed Monitor (Cannon). A device that delivers a large water additive stream and is mounted on a stationary support that either is elevated or is at grade.

3.3.14 Flammable Liquid. A liquid that has a closed-cup flash point that is below 37.8°C (100°F) and a maximum vapor pressure of 2068 mm Hg (40 psia) at 37.8°C (100°F).

3.3.15* Handline. A hose and nozzle that can be held and directed by hand.

3.3.16 Hydrocarbon. A chemical substance consisting of only hydrogen and carbon atoms. [**36**, 2004]

3.3.17 Indirect Attack. Fire-fighting operations involving the application of extinguishing agents to reduce the buildup of heat released from a fire without applying the agent directly onto the burning fuel. [**1145**, 2006]

3.3.18* Micelle. The basic building unit of an emulsion.

3.3.19 Miscibility. The property of being capable of mixing in any ratio without separation into phases. [**1150**, 2004]

3.3.20 Portable Monitor (Cannon). A device that delivers a large water additive stream and is mounted on a movable support or wheels so it can be transported to the fire scene.

3.3.21 Proportioning. The introduction of water additive concentrate at the recommended ratio into the water stream to form a water additive solution.

3.3.22 Surface Active Agent (Surfactant). A chemical agent that materially reduces the surface tension of water.

3.3.23 Surface Tension. The elastic-like force at the surface of a liquid, which tends to minimize the surface area, causing drops to form. [**1150**, 2004]

3.3.24 Synthetic or Artificial Sea Water. A solution consisting of 1.10 percent magnesium chloride hexahydrate, 0.16 percent calcium chloride dihydrate, 0.40 percent anhydrous sodium sulfate, 2.50 percent sodium chloride, and 95.84 percent deionized or distilled water.

3.3.25 Three-Dimensional Fire. A liquid fuel fire that flows freely from a vertical height, falling on associated equipment or structure down to a static pooled surface fire.

3.3.26* Water Additive. Any agent that, when added to water in proper quantities, suppresses, cools, mitigates fire and/or vapors, and/or provides insulating properties for fuels exposed to radiant heat or direct flame impingement.

3.3.27* Water Additive Concentrate. The chemical or chemical composition as received from the manufacturer.

3.3.28* Water Additive Solution. A homogeneous mixture of water and water additive concentrate.

Chapter 4 Uses and Limitations

4.1 General.

4.1.1 Water additives for fire fighting shall be listed and approved by the authority having jurisdiction.

4.1.2 Water additive concentrate shall only be mixed with water.

4.2 Limitations.

4.2.1 General. The use of a water additive solution shall be limited to those applications identified by the manufacturer's listing and Section 4.2.

4.2.2 Water-Reactive Chemicals. Water additive solutions shall have the same limitations as water with respect to extinguishing fires involving chemicals that react with water to create additional hazards.

4.2.3 Class B Fires.

4.2.3.1 The use of water additive solutions for the extinguishment of fires involving Class B flammable or combustible liquids shall be limited to those fuels not soluble in water unless specifically listed for other use.

4.2.3.2* The use of fire extinguishers and fixed fire-extinguishing systems using water additive solution(s) shall not be permitted for the extinguishment of fires in cooking appliances that involve combustible cooking media (vegetable or animal oils and fats) unless specifically listed for this hazard.

4.2.4* Class C Fires. Water additive solutions shall have the same limitations as water with respect to extinguishing fires involving energized electrical equipment.

4.2.5 Class D Fires. Water additive solutions shall not be used on Class D fires unless specifically listed for that purpose.

4.3* Compatibility of Water Additives.

4.3.1 Water additives shall not be mixed with other water additives.

4.3.2 Water additive solutions shall not be mixed with other water additive solutions.

4.3.3 Water additive solutions generated separately shall be permitted to be applied to a fire in sequence or simultaneously.

4.4 Concentrations. Water additive solutions shall be used only in concentrations specified by their listing.

Chapter 5 Properties and General Test Protocols

5.1 General.

5.1.1 Water additive concentrates and water additive solutions prepared at the manufacturer's recommended use level(s) shall be subjected to the tests in this chapter.

5.1.2 The tests detailed in this chapter shall be conducted by an approved independent laboratory using laboratory practices in accordance with ISO/IEC 17025, 40 CFR 160, 40 CFR 792, or equivalent as applicable.

Copyright National Fire Protection Association
Provided by IHS under license with NFPA
No reproduction or networking permitted without license from IHS
Not for Resale

5.1.3 The information gathered in response to the requirements of this chapter shall be reported on the manufacturer's technical data sheet and made available to potential users.

5.2* Water Additives.

5.2.1 Concentrate Pour Point. The pour point of the concentrate shall be determined in accordance with ASTM D 97.

5.2.2 Concentrate Miscibility.

5.2.2.1 The water additive concentrate shall be miscible in water at the manufacturer's minimum and maximum use concentrations.

5.2.2.2 The miscibility of the water additive concentrate shall be tested according to the following procedures so as to meet the conditions of Table 5.2.2.2:

(1) Five hundred (500) mL (16.9 oz) of deionized or distilled water at the test temperature shall be added to a 1 L (0.26 g) glass beaker.
(2) A stirrer, as illustrated in Figure 5.2.2.2, shall be inserted into the water to the depth shown in the figure.
(3) The speed of the stirrer motor shall be adjusted to 60 rpm ± 10 rpm.
(4) The required amount of water additive concentrate shall be added within 2 seconds.
(5) After 10 revolutions of the stirrer, rotation shall be stopped and the liquid mixture shall be observed.
(6) If the water additive solution is not visually homogeneous, it shall be stirred for an additional 10 revolutions. Opalescence shall be considered equivalent to homogeneity.
(7) The procedure shall be repeated until the water additive solution is visually homogeneous or until the total number of revolutions is equal to 100.
(8) The observations made at each 10-revolution interval shall be recorded.
(9) If the water additive solution is not visually homogeneous after 100 revolutions, the result shall be recorded as not miscible.

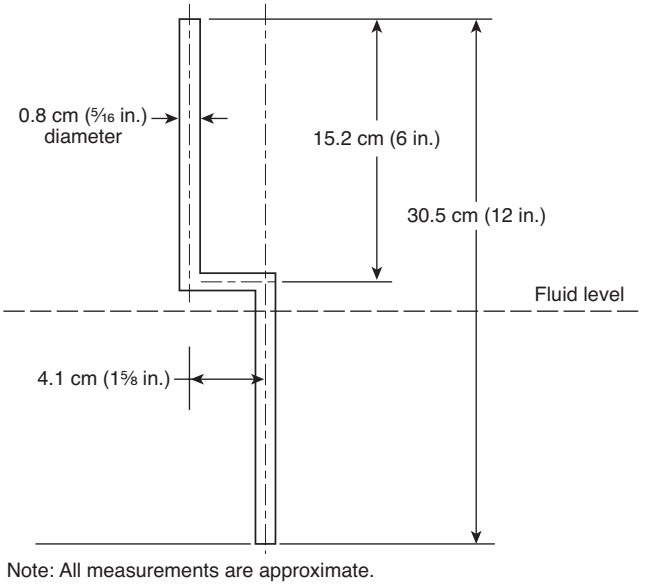

FIGURE 5.2.2.2 Stirrer Shaft for Miscibility Test.

Table 5.2.2.2 Temperature Combinations of Water Additive Concentrates and Water for Miscibility Testing

Water Additive Temperature		Water Temperature	
°C	°F	°C	°F
4 ± 1	40 ± 2	21 ± 1	70 ± 2
21 ± 1	70 ± 2	21 ± 1	70 ± 2
4 ± 1	40 ± 2	4 ± 1	40 ± 2
21 ± 1	70 ± 2	4 ± 1	40 ± 2

5.2.3 Stability of Concentrate.

5.2.3.1 Three 19 L (5 gal) samples of water additive concentrate from a single production lot shall be stored in sealed containers of the type used by the manufacturer for shipping and storage as described in 5.2.3.1.3 through 5.2.3.1.5.

5.2.3.1.1 The samples shall be designated as Samples 1, 2, and 3.

5.2.3.1.2 Samples shall not be agitated or disturbed in any way or at any time during or between storage periods.

5.2.3.1.3 Sample 1.

5.2.3.1.3.1 Sample 1 shall be stored at 41°C ± 3°C (105°F ± 5°F) for 30 continuous days.

5.2.3.1.3.2 At the end of 30 days, Sample 1 shall be removed from the 41°C ± 3°C (105°F ± 5°F) environment and stored at 21°C ± 2°C (70°F ± 4°F) for 168 hours.

5.2.3.1.3.3 Sample 1 shall then be handled, opened, and inspected in accordance with 5.2.3.2.

5.2.3.1.4 Sample 2.

5.2.3.1.4.1 Sample 2 shall be stored at 41°C ± 3°C (105°F ± 5°F) for 30 continuous days in a manner identical to Sample 1.

5.2.3.1.4.2 Within 12 hours of removal from the 41°C ± 3°C (105°F ± 5°F) environment, Sample 2 shall be placed in an environment at a temperature of –10°C ± 1°C (14°F ± 2°F).

5.2.3.1.4.3 Sample 2 shall be kept in this cold environment for a second continuous 30-day period.

5.2.3.1.4.4 At the end of the second 30 days, Sample 2 shall be removed from the –10°C ± 1°C (14°F ± 2°F) environment and then placed in an environment of 21°C ± 2°C (70°F ± 4°F) for 168 hours.

5.2.3.1.4.5 Sample 2 then shall be handled, opened, and inspected in accordance with 5.2.3.2.

5.2.3.1.5 Sample 3.

5.2.3.1.5.1 Sample 3 shall be stored at –10°C ± 1°C (14°F ± 2°F) for 30 continuous days.

5.2.3.1.5.2 At the end of the 30 days, Sample 3 shall be removed from the –10°C ± 1°C (14°F ± 2°F) environment and held at a temperature of 21°C ± 2°C (70°F ± 4°F) for 168 hours.

5.2.3.1.5.3 Sample 3 shall then be handled, opened, and inspected in accordance with 5.2.3.2.

Copyright National Fire Protection Association
Provided by IHS under license with NFPA
No reproduction or networking permitted without license from IHS
Not for Resale

5.2.3.2 Concentrate Handling, Opening, and Inspection.

5.2.3.2.1 At the end of the storage periods described in 5.2.3.1, the sealed sample container shall be inverted four times within a 1-minute period.

5.2.3.2.2 The sample shall be opened and the water additive concentrate poured into an open pail and allowed to sit undisturbed for 10 minutes to allow bubbles to rise to the surface.

5.2.3.2.3 The sample then shall be visually examined for separation, stratification, and crystallization.

5.2.3.2.4 The empty container shall be examined, as well, for any evidence of residual sediment or crystals.

5.2.3.2.5 The water additive concentrate shall not be stratified, crystallized, or otherwise separated at the end of any test outlined in 5.2.3.1.

5.2.4 Concentrate pH. The pH of the water additive shall be between 6 and 9 at 18°C ± 2.7°C (65°F ± 5°F).

5.2.5 Concentrate Viscosity.

5.2.5.1 The results of viscosity testing shall be reported in terms of absolute viscosity (centipoise).

5.2.5.2 The viscosity of the water additive concentrate shall be measured at 2°C (35°F), 21°C (70°F), and 49°C (120°F) according to the following procedure:

(1) A Brookfield viscometer, model LVT or LVF, or equivalent, rotating at 60 rpm with the appropriate spindle (No. 2 for viscosities from 1 to 500 centipoise and No. 4 for viscosities greater than 500 centipoise), shall be used to measure the viscosity.
(2) A straight-sided glass beaker that contains approximately 800 mL (27 oz) of the test sample shall be positioned under the viscometer.
(3) The spindle shall be immersed in the concentrate to the depth indicated on the spindle.
(4) The viscometer then shall be turned on, and the spindle shall be allowed to rotate for 1 minute prior to taking the measurement.
(5) Triplicate measurements shall be made, stirring gently between each measurement, and the viscosity of the sample shall be calculated in centipoise, using the applicable multiplier (5 for spindle No. 2 and 100 for spindle No. 4) and averaging the three values obtained.

5.2.6 Toxicity.

5.2.6.1 Mammalian Toxicity.

5.2.6.1.1 Water additive concentrates and their solutions shall comply with the following EPA OPPTS tests or their equivalent:

(1) 870.1100 Acute Oral Toxicity
(2) 870.1200 Acute Dermal Toxicity
(3) 870.2400 Acute Eye Irritation
(4) 870.2500 Acute Dermal Irritation

5.2.6.1.2 The water additive concentrate and its solutions prepared at the maximum and minimum use concentrations recommended by the manufacturer shall not exceed the toxicity limits established in Table 5.2.6.1.2 when tested in accordance with 5.2.6.1.1.

5.2.6.2 The water additive shall have an LC_{50} greater than 10 mg/l in ASTM soft water (described in ASTM E 729) when measured after 96 hours of static exposure.

5.2.6.3 Aquatic Toxicity.

5.2.6.3.1 Water additive concentrates and their solutions shall be tested, using *Oncorhynchus mykiss* (rainbow trout), in accordance with ASTM E 729 or OPPTS 850.1075 or an equivalent test procedure that is recognized by the authority having jurisdiction where the water additive is to be used.

5.2.6.3.2 In accordance with ASTM E 729, 10 fish that are 60 days ± 15 days post-hatch shall be exposed under static conditions to each level of a water additive solution in soft water for 96 hours at 12°C ± 1°C (54°F ± 2°F).

5.2.7 Uniform Corrosion.

5.2.7.1 Testing of the corrosive effects of water additive concentrates and solutions shall be conducted in accordance with either NACE Standard Test Method TM0169 or ASTM G1 and ASTM G31, and in accordance with 5.2.7.2 through 5.2.7.7.

5.2.7.2 The water additives and its solutions shall not have corrosion rates exceeding those shown in Table 5.2.7.7.2.1 when tested in accordance with 5.2.7.

5.2.7.3 Testing of the corrosive effects of water additive concentrates and solutions shall be conducted in accordance with either NACE TM0169 or ASTM G 1 and ASTM G 31, and in accordance with 5.2.7.5 through 5.2.7.10.

Table 5.2.6.1.2 Toxicity Limits for Water Additives and Water Additive Solutions

				Primary Eye Irritation	
	Acute Oral Toxicity	Acute Dermal Toxicity	Primary Dermal Irritation	Unwashed Eyes	Washed Eyes
Water additive	LD_{50} > 500 mg/kg	LD_{50} > 2000 mg/kg	Primary irritation score: < 5.0	Mildly irritating or less	Mildly irritating or less
	If LD_{50} ≥ 50 but ≤ 500, recommend protective gear and safe handling procedures	If LD_{50} ≥ 200 but ≤ 2000, recommend protective gear and safe handling procedures	If more irritating, recommend protective gear and safe handling procedures	If more irritating, recommend protective gear and safe handling procedures	If more irritating, recommend protective gear and safe handling procedures
	LD_{50} < 50 is not acceptable	LD_{50} < 200 is not acceptable			
Water additive solution	LD_{50} > 5000 mg/kg	LD_{50} > 2000 mg/kg	Primary irritation score: < 5.0	Mildly irritating or less	Mildly irritating or less

Copyright National Fire Protection Association
Provided by IHS under license with NFPA
No reproduction or networking permitted without license from IHS
Not for Resale

5.2.7.4 Results. The results of the testing shall be included in the manufacturer's technical data sheet.

5.2.7.5 Samples.

5.2.7.5.1 The water additive concentrate and its solutions shall be tested for corrosion with samples of 4130 mild steel, 2024-T3 aluminum, and UNS C27000 yellow brass (65 percent copper, 35 percent zinc).

5.2.7.5.2 The water additive concentrate and its solutions shall be tested at the maximum and minimum use concentrations specified by the manufacturer.

5.2.7.5.3 A minimum of three test coupons shall be exposed to each test condition.

5.2.7.6 Marking and Measurement. Each coupon, 25 mm × 102.6 mm × 3.2 mm (1 in. × 4 in. × ⅛ in.), shall be marked by vibrating engraver with a unique identification code, drilled in the upper center to insert the braided Dacron® string used to suspend it, and then measured to the nearest 0.01 mm (0.000394 in.) for length, width, and thickness.

5.2.7.7* Cleaning and Drying. Each coupon shall be degreased and rinsed in tap water.

5.2.7.7.1 The degreased coupon shall not be touched with a bare hand.

5.2.7.7.2 Procedure for Cleaning.

5.2.7.7.2.1 The coupons shall be cleaned chemically as described in Table 5.2.7.7.2.1, rinsed in distilled water, wiped to remove the water film, and dried at 55°C (130°F) for 15 to 30 minutes.

5.2.7.7.2.2 The coupons shall be cooled to room temperature, weighed to 0.1 mg (0.00154 grain), and either used immediately or stored in a desiccator until use.

5.2.7.7.3 The coupon weight shall be recorded for use in determining weight loss at the end of the 90-day testing period.

5.2.7.8 Test Set-Up. One coupon shall be suspended by a length of braided Dacron fishing line in a 0.95 L (32 oz) glass jar in such a way that the coupon does not touch the sides or bottom of the jar.

5.2.7.8.1 Each jar shall contain 0.8 L (24 oz) of liquid for total immersion tests or 0.4 L (12 oz) of liquid for partial immersion tests.

5.2.7.8.2 For total immersion tests, the coupon shall be completely covered with liquid.

5.2.7.8.3 For partial immersion tests, the coupon shall be suspended so that one-half its length is immersed in the liquid and one-half its length is exposed to the vapor.

5.2.7.8.4 Each jar shall be closed with a screw cap, labeled with coupon identification and starting date, and put in an incubator at 21°C or 49°C (70°F or 120°F), dependent on the desired test condition.

5.2.7.9 Test Duration and Completion. Jars containing the test liquid (three at each exposure and temperature) shall stand undisturbed for 90 days.

5.2.7.9.1 At the end of the 90-day test period, the coupons shall be removed from the liquid and rinsed under running water to remove loosely attached corrosion products.

5.2.7.9.2 The coupons shall be lightly scrubbed with a toothbrush or other nonmetallic brush to aid in removal of scale.

5.2.7.9.3 The coupons shall be cleaned chemically using the same procedures that were used initially in accordance with Table 5.2.7.7.2.1.

5.2.7.9.4 A clean, unused coupon shall be cleaned in the same manner at the same time to serve as a control for weight lost during the cleaning process.

5.2.7.9.5 After rinsing in distilled water, oven-drying, and cooling the coupons, the final weight of each coupon shall be determined to 0.1 mg (0.00154 grain).

Table 5.2.7.7.2.1 Procedures for Cleaning Corrosion Coupons

Alloy	Cleaning Solution*	Immersion Time (minutes)	Solution Temperature	Remarks
Aluminum	70% HNO_3	2–3	Room temperature	Lightly scrub using nonmetallic brush or scrub pad after immersion. If the corrosion film resists cleaning with the HNO_3, alternate with 10-minute immersion in a solution that contains 2 g CrO_3 and 5 g H_3PO_4 in 93 mL of 80°C to 85°C deionized or distilled water.
Brass	15–20% HCl	2–3	Room temperature	Lightly scrub using nonmetallic brush or scrub pad after immersion. A rubber stopper, Scotch Brite® or equivalent, nonmetallic scourer or scrubber can be used to scrub coupons with hard or severe coating.
Steel	50 g SnCl + 20 g $SbCl_3$ in 1 L conc HCl	3–5	Ice bath	

*Discard cleaning solutions when changing from one product to another and as the cleaning solutions become discolored. Use fresh chemical to clean each magnesium coupon. Exercise care to prevent cross-contamination.

Source: NACE TM0169.

Copyright National Fire Protection Association
Provided by IHS under license with NFPA
No reproduction or networking permitted without license from IHS
Not for Resale

5.2.7.10 Corrosion Rate.

5.2.7.10.1 The corrosion rate (Cr) in mils per year (mpy) shall be calculated for each sample as follows:

$$Cr = 534 \frac{Wt_i - Wt_f - Wt_c}{Atp}$$

where:
Cr = corrosion rate (mpy)
Wt_i = initial coupon weight (mg)
Wt_f = final coupon weight (mg)
Wt_c = weight loss of the control (mg)
A = area of the coupon (in.^{2})
t = exposure (hours)
p = density of the alloy [g/cm^3 (lb/in.^{3})] as follows: 4130 steel = 7.86 g/cm^3 (0.28 lb/in.^{3}); yellow brass = 8.53 g/cm^3 (0.3 lb/in.^{3}); 2024-T3 aluminum = 2.77 g/cm^3 (0.1 lb/in.^{3})

5.2.7.10.2 Results of replicate tests shall be averaged and rounded to the nearest 0.1 mpy.

5.3* Intergranular Corrosion Test. If the water additive solution is recommended for application from an aircraft, at least one aluminum 2024-T3 coupon for each exposure and temperature from 90-day weight loss tests on the specified alloys shall be sliced as shown in Figure 5.3, mounted, polished to 0.3 micron alumina finish, etched with Keller's reagent using standard metallurgical techniques, and examined at a magnification of 500× on both the transverse and longitudinal cross-sections.

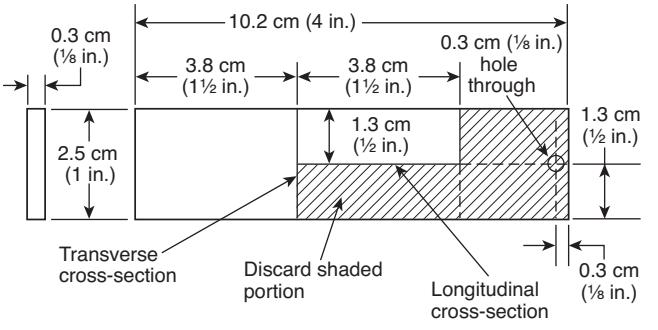

FIGURE 5.3 Intergranular Corrosion Test.

5.4 Grain Boundary Attack. Any attack at the grain boundary of the test coupon exposed during uniform corrosion testing when tested in accordance with 5.2.7 and alloys specified in Section 5.3 shall not be acceptable.

5.5 Separation on Standing.

5.5.1* If the water additive solution is to be stored for more than 30 days, the water additive solution, in concentrations specified for use by the manufacturer, shall display no tendency to stratify or otherwise separate when stored undisturbed for 30 days in a closed container at the minimum and maximum concentrations and at 21°C ± 3°C (70°F ± 5°F).

5.5.2 The formation of two or more distinct layers or the presence of precipitate occurring during the course of the test shall be considered as separation.

5.6 Compatibility with Nonmetallic Materials.

5.6.1 General.

5.6.1.1 The effect of water additive concentrate and its solutions on the hardness and volume of the following nonmetallic materials shall be determined in accordance with the following procedure:

(1) PVC plastic CID A-A-55859A Type 1
(2) SAE Aerospace Materials Specification (AMS) S-8802 sealant
(3) MIL-PRF-81733D sealant
(4) Chloroprene rubber SAE AMS, 3208M
(5) SAE AMS C-9084 - Fiberglass with epoxy resin
(6) High-density polyethylene ASTM D 4976-04
(7) Flexible polyolefin SAE AMS DTL-23053/5

5.6.1.2 The degree of change in hardness and volume of the test piece shall be reported in accordance with Section 5.1.

5.6.2 Samples.

5.6.2.1 Samples of each test material not previously exposed shall be measured to determine volume and hardness as described in 5.6.3 and 5.6.4 before and after exposure to the water additive concentrate and its solutions as described in 5.6.2.2 through 5.6.2.13.

5.6.2.2 The solutions shall be prepared in accordance with the manufacturer's recommendations.

5.6.2.3 A wide-mouth bottle of nominal 125 mL (4 oz) volume, sealable with a nonmetallic screw cap, shall be used as the test container.

5.6.2.4 A sample of the nonmetallic material having a volume of 10 cm^3 to 20 cm^3 (0.6 in.^{3} to 1.2 in.^{3}) shall be prepared with dimensions chosen so that it can be placed in the test container.

5.6.2.5 The sample shall be placed in the container and the container filled with the test concentrate or solution so that the sample is totally immersed.

5.6.2.6 The test container shall be covered loosely and maintained at 21°C (70°F) during the test.

5.6.2.7 The sample shall be removed from the concentrate or solution without wiping, rinsing, or drying and placed on top of the container lid for 8 consecutive hours during each 24-hour period for 5 consecutive days.

5.6.2.8 The container shall be closed during atmospheric exposure of the sample.

5.6.2.9 At the end of each atmospheric exposure period, the sample shall be returned to the test container.

5.6.2.10 At the end of five 24-hour test periods, the sample shall remain in the solution for 48 to 63 hours.

5.6.2.11 This cycle shall be repeated until the sample has been subjected to four cycles at the conditions described in 5.6.2.10.

5.6.2.12 Any lost concentrate or solution shall be replenished during the test period so that the sample is totally immersed when in the test solution.

5.6.2.13 At the end of the test period, the sample shall be removed from the liquid, rinsed with distilled water, and air-dried.

Copyright National Fire Protection Association
Provided by IHS under license with NFPA
No reproduction or networking permitted without license from IHS
Not for Resale

5.6.3 Volume Test.

5.6.3.1 The volume of the sample shall be measured to within 1 cm^3 by liquid displacement before and after exposure to the water additive concentrate and its solutions as described in 5.2.3.1.

5.6.3.2 Volumes shall be recorded.

5.6.3.3 The change in volume shall be calculated and reported as a percentage of the initial volume.

5.6.3.4 The average of triplicate results shall be reported on the manufacturer's product data sheet.

5.6.4 Hardness Test.

5.6.4.1 The hardness of the samples shall be determined following Federal Test Standard No. 601, Methods 3021 and 3025, both prior to and following the procedure described in 5.6.2.

5.6.4.2 A Shore D gauge shall be used for fiberglass and high-density polyethylene.

5.6.4.3 A Shore A2 gauge shall be used for all materials other than fiberglass and high-density polyethylene.

5.6.4.4 The hardness of each sample shall be recorded.

5.6.4.5 The change in hardness shall be calculated and reported on the product data sheet as a percentage of initial hardness.

5.6.4.6 The average of the triplicate results shall be reported.

5.7 Biodegradability.

5.7.1* When tested, in accordance with 5.7.1, the water additive shall be readily biodegradable or biodegradable.

5.7.2 The biodegradability of the water additive concentrate shall be determined in accordance with U.S. EPA Office of Prevention, Pesticides and Toxic Substances, *Fate, Transport, and Transformation Test Guidelines,* OPPTS 835.3110.

5.7.3 Testing shall be conducted for a minimum of 28 days and shall be continued until an oxygen depletion plateau is reached. [**1150:**5.1.3.2]

5.7.4 Testing shall be discontinued at the end of 42 days, even if the plateau has not been reached. [**1150:**5.1.3.3]

5.7.5 At least one reference substance shall be used to monitor inoculum activity. [**1150:**5.1.3.4]

5.8 Flash Point. The open cup flash point shall be determined in accordance with ASTM D 92.

5.9 Wood Panel Fire.

5.9.1 The ability of water additive solutions to extinguish surface fires shall be determined according to the procedures detailed in this section and UL 711/ULC S508, using a 4-A wood panel.

5.9.2 The water additive solution shall be prepared at the concentration recommended by the manufacturer and applied with a nozzle acceptable to the listing agency.

5.9.3 The solution shall be applied at a rate of 19 L/min (5 gpm).

5.9.4 Solution shall be applied for 30 seconds, by which time extinguishment shall have been achieved.

5.9.5 Observations shall be continued for 15 minutes following the end of discharge, during which time reignition shall not occur.

5.10 Wood Crib Fire.

5.10.1 The ability of water additive solutions to extinguish wood crib fires shall be determined according to the procedures detailed in this section and UL 711/ULC S508 using a 4-A wood crib.

5.10.2 The water additive solution shall be prepared at the concentration recommended by the manufacturer and applied with a nozzle acceptable to the listing agency.

5.10.3 The solution shall be applied at a rate of 19 L/min (5 gpm).

5.10.4 Solution shall be applied for 30 seconds, by which time extinguishment shall have been achieved.

5.10.5 Observations shall be continued for 15 minutes following the end of discharge, during which time reignition shall not occur.

Chapter 6 Reserved

Chapter 7 Class B Fire Test Methods

7.1 General. Water additive solutions for Class B fuels shall be tested and listed in accordance with one or more of the following test procedures:

(1) Spill fire test
(2) Pool fire test
(3) Three-dimensional fuel fire test
(4) Polar solvent fire test
(5) Vapor mitigation test
(6) Fuel in depth fire test

7.2* Spill Fire Test.

7.2.1 When tested as described in this section, a water additive solution shall achieve 100 percent extinguishment in an average of not more than 60 seconds.

7.2.2 The burnback resistance shall be confined to an area of 1.15 m^2 (12.4 ft^2) or 25 percent for an average of 180 seconds.

7.2.3 Test Site.

7.2.3.1 The 4.6 m^2 (50 ft^2) fire test shall be conducted indoors in a level 2.43 m (7.97 ft) inside diameter pan fabricated from 6 mm (¼ in.) thick steel having sides 125 mm (5 in.) high.

7.2.3.2 The pan shall contain 38 L (10 gal) heptane on a substrate of water.

7.2.3.3 The water shall be used only to ensure complete coverage of the pan and shall not exceed 5 mm (3⁄16 in.) in depth at the shallowest point of the pan.

7.2.3.4 All fire tests shall be conducted on a surface that is flushed free of fuel and water additive solution from previous tests.

7.2.3.5 The fire test pan shall be cool to the touch before retesting.

Copyright National Fire Protection Association
Provided by IHS under license with NFPA
No reproduction or networking permitted without license from IHS
Not for Resale

7.2.4 Test Equipment.

7.2.4.1 The air-aspirated or non-air-aspirated nozzle or compressed air system, as specified by the manufacturer, shall have a flow rate of 18.9 L/min (5 gpm).

7.2.4.2 When an air-aspirated nozzle or compressed air system is used, foam quality tests shall be conducted and reported in accordance with ULC S560.

7.2.5 Test Conditions.

7.2.5.1 The temperature of the solution shall be 20°C ± 3°C (68°F ± 5°F).

7.2.5.2 Thirty-eight L (10 gal) of commercial grade heptane conforming to UL 162 shall be used.

7.2.5.3 Fuel temperature shall not be less than 10°C (50°F).

7.2.5.4 Tests shall be conducted only when the ambient temperature is above 5°C (40°F).

7.2.6 Test Procedures.

7.2.6.1 For air-aspirated nozzles and compressed air systems, expansion and drainage testing as described in ULC S560 shall be conducted prior to initiation of fire testing to confirm equipment functionality.

7.2.6.2 Tests shall be conducted and reported using a solution of water additive liquid concentrate, as received, in fresh and synthetic seawater.

7.2.7 Number of Tests.

7.2.7.1 Two sets of two tests, one set with fresh water and one set with synthetic seawater, shall be conducted to derive average extinguishment and burnback times.

7.2.7.2 In the event that either of the averages after the two tests do not meet the requirements of this standard, one more test shall be conducted, with the results of all three tests being averaged.

7.2.7.3 No further testing shall be conducted if either of the averages fails to meet the requirements following the third test.

7.2.8 Test Method.

7.2.8.1 The complete fuel charge shall be emptied into the pan.

7.2.8.2 The fuel shall be ignited within 60 seconds after completion of fueling and shall be permitted to burn freely for 15 seconds before application of the water additive solution.

7.2.8.3 The water additive solution shall be applied for a period of 90 seconds, and the fire shall be extinguished in accordance with the manufacturer's application instructions.

7.2.8.4 The nozzle shall be permitted to be moved throughout the duration of the solution application or fixed in position for part or all of the solution application, but at no time shall the nozzle tip extend beyond the plane of the edge of the pan.

7.2.8.5 The operator shall be permitted to move around the entire area of the pan.

7.2.9* Burnback.

7.2.9.1 A weighted 300 mm (12 in.) diameter pan, having 50 mm (2 in.) side walls, charged with 1.1 L (0.3 gal) of heptane shall be placed in the center of the test area.

7.2.9.2 An eyebolt with a 20 mm (¾ in.) shaft attached to the center of the pan, and a 3 m (10 ft) pole with a hook on the end, shall facilitate the placement of the pan.

7.2.9.3 The fuel shall be ignited, and the burnback pan shall be placed in the 4.6 m^2 (50 ft^2) fire test pan within 15 seconds after solution application is terminated.

7.2.9.4 Burnback time shall commence at the time of placement of the burnback pan and shall terminate when 25 percent of the fire test pan area is aflame.

7.2.9.5 The burnback pan shall be left in the fire test pan until 25 percent burnback has been achieved.

7.2.10 Data. The following data shall be recorded for each test:

(1) Time for extinguishment (seconds)
(2) Time for 25 percent burnback (seconds)
(3) Ambient temperature
(4) Expansion and drainage (for air-aspirated nozzles or compressed air systems)

7.2.11 Application Rate. The listed application rate shall be 6.89 (L/min)/m^2 (0.17 gpm/ft^2).

7.3* Pool Fire Test.

7.3.1 General. Water additive solutions shall be tested in accordance with this section for use on fuels pooled to a depth of 101 mm (4 in.) or less.

7.3.1.1 A water additive in combination with an 18.9 L/min (5 gpm) nozzle shall be tested in accordance with this section and comply with the requirements specified.

7.3.1.2 When an air-aspirated nozzle or compressed air system is used, foam quality tests shall be conducted and reported in accordance with ULC S560.

7.3.2 Performance. The water additive solution discharged onto flammable liquid test fires shall comply with 7.3.2.1 through 7.3.2.4.

7.3.2.1 The fire shall be completely extinguished during or at the end of discharge.

7.3.2.2 The test fuel surface shall not reignite when a lighted torch is moved over all areas of the surface.

7.3.2.3 Candling, flaming, or flashover that self-extinguishes shall be permitted provided that the phenomenon does not remain in one area for more than 30 seconds.

7.3.2.4 When the stovepipe is removed, the liquid surface shall react in either of the following ways:

(1) Restrict the spread of fire at any time during the 3-minute duration to a total area of not more than 0.92 m^2 (10 ft^2)
(2) Flow over and extinguish the burning area

7.3.3 Pretest Storage. Each water additive concentrate to be tested shall be taken from its container as received from the manufacturer, following storage at room temperature for at least 24 hours.

7.3.4 Arrangement of Test.

7.3.4.1 The test fuel of commercial grade heptane conforming to UL 162 shall be placed in a 4.6 m^2 (50 ft^2) fire test pan constructed in accordance with UL 162.

7.3.4.2 The pan shall be located on the floor.

--`,,```,,,,````-`-`,,`,,`,`,,`---
Copyright National Fire Protection Association
Provided by IHS under license with NFPA
No reproduction or networking permitted without license from IHS
Not for Resale

7.3.4.3 A fuel layer 50.8 mm (2 in.) deep shall be floated on a layer of water not less than 25 mm (1 in.) deep.

7.3.4.4 The water depth shall be adjusted to provide a distance from the top of the pan to the surface of the liquid not less than 202 mm (8 in.).

7.3.5 Nozzle Position and Spray Direction.

7.3.5.1 The nozzle shall be positioned in front of and above the test pan.

7.3.5.2 The nozzle shall be permitted to be moved throughout the duration of water additive solution application or fixed in position for part of or all of the application.

7.3.5.3 Until 90 percent of flame reduction is attained, all water additive solution application shall be from behind one side of the test pan and discharged directly onto the fuel surface.

7.3.5.4 After 90 percent of flame reduction is attained, water additive solution application shall be permitted to be from the front and one adjacent side and shall be permitted to be directed onto the inside of the test pan.

7.3.5.5 The nozzle shall be permitted to be moved beyond the adjacent side extensions.

7.3.5.6 The nozzle shall not be permitted to extend over any part of the test pan.

7.3.6 Preburn. After the fuel has been added to the test pan and the nozzle has been arranged, the fuel shall be ignited and the resulting fire allowed to burn freely for a 60-second preburn.

7.3.7 Discharge.

7.3.7.1 At the end of the 60-second preburn, the water additive solution shall be discharged for 5 minutes.

7.3.7.2 The fire shall be completely extinguished at or before the end of discharge.

7.3.7.3 After all discharge is complete, the test fuel with water additive solution shall be left undisturbed for 5 minutes.

7.3.8 Reignition.

7.3.8.1 During the time the water additive solution with test fuel is left undisturbed, a lighted torch shall be passed approximately 25 mm (1 in.) above the entire liquid surface, including corners, in an attempt to reignite the fuel.

7.3.8.2 The torch test shall be conducted once during this period and shall commence 2 minutes after the end of agent discharge and prior to the ignition of the 300 mm (12 in.) diameter stovepipe.

7.3.8.3 The torch test shall be conducted for not less than 1 minute.

7.3.8.4 The fuel shall not reignite while the torch is being passed over the fuel.

7.3.8.5 Candling, flaming, or flashover that self-extinguishes shall be permitted provided that the phenomenon does not remain in one area for more than 30 seconds.

7.3.9 Burnback.

7.3.9.1 After completion of attempt to reignite the fuel with the lighted torch, a stovepipe shall be lowered into the liquid.

7.3.9.2 The stovepipe shall be placed approximately 0.76 m (2½ ft) from each of two adjacent sides of the test pan in the corner considered to cause the most severe burnback condition and lowered in such a manner that the liquid surface is not disturbed.

7.3.9.3 The portion of the foam blanket that is enclosed by the stovepipe shall be removed with as little disturbance as possible of the foam blanket outside of the stovepipe.

7.3.9.4 If no foam blanket is present, 1 L (0.26 gal) of heptane shall be poured into the stovepipe.

7.3.9.5 The fuel cleared or placed inside the stovepipe shall be ignited 5 minutes after the end of agent discharge and allowed to burn for 1 minute.

7.3.9.6 The stovepipe then shall be slowly removed from the pan while the fuel continues to burn.

7.3.9.7 When the stovepipe is removed, the liquid surface shall react in either of the following ways:

(1) Restrict the spread of fire at any time during a 3-minute duration to a total area of not more than 0.92 m^2 (10 ft^2)
(2) Flow over and extinguish the burning area

7.3.9.7.1 The spread of fire caused by candling, ghosting, or flashover, in which the flame height exceeds 0.6 m (2 ft) but then self-extinguishes, shall be considered unacceptable if the total area involved in flame exceeds 0.92 m^2 (10 ft^2) at any time during the 3-minute duration 7.3.9.7(1).

7.3.10 Application Rate. The listed application rate shall be 10.19 (L/min)/m^2 (0.25 gpm/ft^2).

7.4 Three-Dimensional Fuel Fire Test.

7.4.1 General.

7.4.1.1 Water additive concentrates shall be evaluated for aviation applications or industrial applications, or both, and shall be listed only for those applications for which they have been successfully tested.

7.4.1.2 To be listed for the extinguishment of three-dimensional fires, solutions of the water additive concentrate prepared at the manufacturer's recommended concentration shall be tested and listed as described in this section. *(See Annex D.)*

7.4.2 Fuel.

7.4.2.1 Water additives shall be tested against a free-flowing running fuel fire.

7.4.2.2 For aviation (*A*) applications, the fuel shall be Jet Petroleum Grade A.

7.4.2.3 For industrial (*I*) applications, the fuel shall be commercial heptane.

7.4.3* Flow Adjustments. For the purpose of this fire test, fuel shall be adjusted to slowly flow down both sides of the vertical cascade at a total fuel flow rate of 13.25 L/min ± 1.9 L/min (3.5 gpm ± 0.5 gpm).

7.4.4 Wind Speed. Maximum wind speed for this test sequence shall be less than 8 kph (5 mph).

7.4.5 Water.

7.4.5.1 The lower collection basin of the tower system shall be charged with 101 mm (4 in.) of fresh water at less than 38°C (100°F).

Copyright National Fire Protection Association
Provided by IHS under license with NFPA
No reproduction or networking permitted without license from IHS
Not for Resale

7.4.5.2 The vertical tower column shall have water free flowing through the tower cooling system, and the vertical tower temperature prior to the test shall be below 38°C (100°F).

7.4.6 Preburn.

7.4.6.1 The basin area shall contain 18.9 L (5 gal) of fuel prior to ignition.

7.4.6.2 The fuel shall be ignited and allowed to preburn for a minimum of 45 seconds.

7.4.6.3 In the event both faces of the test apparatus are not fully involved after 45 seconds, the preburn time shall be extended until this is achieved.

7.4.7 Application of Water Additive.

7.4.7.1 Water additive solution shall be applied with a non-air-aspirated nozzle, an air-aspirated nozzle, or a compressed air foam system.

7.4.7.2 When an air-aspirated nozzle or compressed air system is used, foam quality tests shall be conducted and reported in accordance with ULC S560.

7.4.7.3 For aviation fuel, water additive solution application rate shall be a maximum of 151 L/min (40 gpm), and extinguishment shall occur in 20 seconds or less.

7.4.7.4 For industrial applications, water additive solution application rate shall be a maximum of 227 L/min (60 gpm), and extinguishment shall occur in 45 seconds or less.

7.4.8 Distance to Fire.

7.4.8.1 At the start of application, fire fighters shall position themselves at the front of the cascade system at least 6.1 m (20 ft) from the closest corner of the cascade fuel basin.

7.4.8.2 At no time shall a fire fighter get closer than 3 m (10 ft) to accomplish the extinguishing process.

7.4.8.3 Fire fighters shall remain within an arc of no more than 1.52 m (5 ft) left or right of the closest corner starting point of the collection basin.

7.4.9 Performance. For each application (*A* or *I*) to be listed, three fires in a maximum of six total trials shall meet the performance requirements of 7.4.7.3 and 7.4.7.4.

7.5 Polar Solvents Fire Test. (Reserved)

7.6 Vapor Mitigation Test.

7.6.1* General. This section shall cover test procedures to evaluate the ability of a water additive solution to render a hydrocarbon fuel nonflammable through emulsification.

7.6.2 Test Materials.

7.6.2.1 The following materials shall be provided for the test:

(1) 6.35 mm (¼ in.) thick steel pan measuring 1.2 m × 1.2 m × 202 mm (4 ft × 4 ft × 8 in.)
(2) Amount of water additive concentrate as specified by the manufacturer for the fuel being tested
(3) Liters (gallons) of fuels as specified in 7.6.2.2
(4) Amount of water needed to meet the manufacturer's specified concentration ratio
(5) Ignition source consisting of a propane torch producing a minimum 25 mm (1 in.) flame

7.6.2.2 The following fuels shall be tested:

(1) Heptane
(2) Gasoline as defined in 40 CFR 86.113-94
(3) Gasoline with 10 percent ethanol
(4) Gasoline with 18 percent MTBE
(5) No. 2 diesel
(6) Jet A

7.6.3* Test Set-Up. The emulsification test shall be set up as follows:

(1) The steel pan shall be thoroughly washed with clean water.
(2) The full amount of fuel shall be poured into the pan.
(3) The full amount of water additive concentrate shall be mixed into the fuel.
(4) The full amount of water shall be added in a manner to agitate the resulting mixture.

7.6.4 Test Procedures.

7.6.4.1 General. Ignition tests for each fuel in 7.6.2.2 shall be conducted in accordance with 7.6.4.2 and 7.6.4.3.

7.6.4.2 One-Minute Ignition Test.

7.6.4.2.1 One minute after completion of agitation, the ignition torch described in 7.6.2.1(5) shall be passed over the entire liquid surface, including corners, with the tip of the flame impinging on the surface, in an attempt to reignite the fuel.

7.6.4.2.2 The fuel shall not reignite while the torch is being passed over the fuel.

7.6.4.3 Two-Hour Ignition Test.

7.6.4.3.1 Two hours after completion of agitation, the ignition torch described in 7.6.2.1(5) shall be passed over the entire liquid surface, including corners, with the tip of the flame impinging on the surface, in an attempt to reignite the fuel.

7.6.4.3.2 The fuel shall not reignite while the torch is being passed over the fuel.

7.6.5 Acceptable Performance. A water additive concentrate shall be listed for vapor mitigation when the requirements of 7.6.4.2 and 7.6.4.3 have been met for all fuels in 7.6.2.2.

7.6.6 Other Test Methods. (Reserved)

7.7* Fuel in Depth Fire Test. Water additives to be used for fuel in depth fires shall be tested to the fire test requirements in UL 162.

Chapter 8 Packaging and Labeling

8.1 Packaging.

8.1.1 Packaging of water additive concentrates shall conform to regulations governing ground and air transport of materials.

8.1.2 Containers shall meet the performance requirements of UL 162.

8.2* Labeling. The manufacturer shall provide the following information on a label permanently attached to the concentrate container:

(1) Manufacturer name and address
(2) Product name, lot number, and date of manufacture
(3) Listed uses and application data in the form of a chart that conforms to Figure 8.2
(4) Manufacturer's recommended proportioning ratios for each listed application
(5) Application rate for each listed application

Copyright National Fire Protection Association
Provided by IHS under license with NFPA
No reproduction or networking permitted without license from IHS
Not for Resale

Application	Listed Concentration	Listed Application Rate	Listing Agency
Spill Fire			
Pool Fire			
Fuel in Depth Fire			
3D Aviation			
3D Industrial			
Polar Solvent			
Vapor Mitigation			

© 2007 National Fire Protection Association

FIGURE 8.2 Label Example.

(6) Recommended minimum and maximum storage temperatures
(7) Emergency and first aid instructions
(8) Volume of water additive concentrate in container
(9) Statement certifying that the product has been tested and listed

Chapter 9 Supply

9.1* System Requirements. Water additives that comply with this standard shall be permitted for use with standard equipment provided said equipment is primarily designed to utilize water or foam as a medium of fire control and extinguishment.

9.2 Fire Department Supply Requirements.

9.2.1 Tanks. The manufacturer of the water additive shall specify if premixing is allowed.

9.2.2* Separate Supplies. Where portable tanks are not a part of the apparatus, or where it is desired to carry the water additive separately for use either with water from portable tanks or with water from other sources of supply, the amount considered necessary shall be carried in a tank connected to proportioning equipment on the apparatus installed in accordance with NFPA 1901.

9.3* Fixed Systems. Fixed systems utilizing water additive solution shall be permitted to be installed in accordance with the following standards as appropriate only after an engineering analysis acceptable to the authority having jurisdiction has been conducted:

(1) NFPA 13
(2) NFPA 14
(3) NFPA 15

Chapter 10 Inspection, Testing, and Maintenance of Fixed Systems

10.1* Fixed Extinguishing Systems. Fixed extinguishing systems shall be inspected, tested, and maintained in accordance with the applicable system requirements of NFPA 25.

10.2 Inspection of Water Additive Concentrate. Annually, samples of water additive concentrate shall be sent to the manufacturer or qualified laboratory for quality condition testing.

Annex A Explanatory Material

Annex A is not a part of the requirements of this NFPA document but is included for informational purposes only. This annex contains explanatory material, numbered to correspond with the applicable text paragraphs.

A.1.3 It is not the intent to preclude agents, such as Class A or Class B foams, that comply with other NFPA standards from meeting the requirements of this standard. The scope of this document may include products with extinguishing mechanisms that emulsify fuels and render them inert.

A.3.2.1 Approved. The National Fire Protection Association does not approve, inspect, or certify any installations, procedures, equipment, or materials; nor does it approve or evaluate testing laboratories. In determining the acceptability of installations, procedures, equipment, or materials, the authority having jurisdiction may base acceptance on compliance with NFPA or other appropriate standards. In the absence of such standards, said authority may require evidence of proper installation, procedure, or use. The authority having jurisdiction may also refer to the listings or labeling practices of an organization that is concerned with product evaluations and is

Copyright National Fire Protection Association
Provided by IHS under license with NFPA
No reproduction or networking permitted without license from IHS
Not for Resale

thus in a position to determine compliance with appropriate standards for the current production of listed items.

A.3.2.2 Authority Having Jurisdiction (AHJ). The phrase "authority having jurisdiction," or its acronym AHJ, is used in NFPA documents in a broad manner, since jurisdictions and approval agencies vary, as do their responsibilities. Where public safety is primary, the authority having jurisdiction may be a federal, state, local, or other regional department or individual such as a fire chief; fire marshal; chief of a fire prevention bureau, labor department, or health department; building official; electrical inspector; or others having statutory authority. For insurance purposes, an insurance inspection department, rating bureau, or other insurance company representative may be the authority having jurisdiction. In many circumstances, the property owner or his or her designated agent assumes the role of the authority having jurisdiction; at government installations, the commanding officer or departmental official may be the authority having jurisdiction.

A.3.2.4 Listed. The means for identifying listed equipment may vary for each organization concerned with product evaluation; some organizations do not recognize equipment as listed unless it is also labeled. The authority having jurisdiction should utilize the system employed by the listing organization to identify a listed product.

A.3.3.4 Class B Fire. The definition of Class B fires includes many substances for which this standard does not currently contain test protocols — for example, fires involving solvents, lacquers, alcohols, and flammable gases.

A.3.3.6 Concentration. The type of water additive used determines the percentage of concentration required. For example, a 3 percent water additive concentrate is mixed in the ratio of 3 parts water additive to 97 parts water. Liquid concentrates are typically proportioned on a volume rate and solid concentrates by weight.

A.3.3.7 Demulsification. The process can proceed very slowly or very quickly depending on the stability of the emulsion.

A.3.3.8 Discharge Device. Examples include, but are not limited to, sprinklers, spray nozzles, and hose nozzles.

A.3.3.12 Emulsion. Such systems possess a minimal stability, which can be accentuated by such additives as surface active agents, finely divided solids, and so forth.

A.3.3.13 Fixed Monitor (Cannon). The monitor can be fed solution by permanent piping or hose.

A.3.3.15 Handline. The nozzle reaction usually limits the solution flow to about 1135 L/min (300 gpm). [**11**, 2005]

A.3.3.18 Micelle. For purposes of this standard, a micelle consists of a minute droplet of the hydrocarbon fuel surrounded by water and the emulsifying agent.

A.3.3.26 Water Additive. Water additives can materially reduce water's surface tension, increase its penetrating and spreading abilities, and might also provide enhanced cooling, emulsification, and foaming characteristics.

A.3.3.27 Water Additive Concentrate. For the purpose of this document, "water additive concentrate" and "concentrate" are used interchangeably.

A.3.3.28 Water Additive Solution. For the purpose of this document, "water additive solution" and "solution" are used interchangeably.

A.4.2.3.2 Fire test requirements for protection of commercial cooking equipment are addressed by UL 300 for fixed systems and UL 711/ULC S508 for fire extinguishers.

A.4.2.4 Should wetting agent solution come in contact with electrical equipment, the water additive can remain behind after the water has dried off and can constitute a hazard when the equipment is put back in operation.

A.4.3 The mixing of these additives can have adverse effects and render solutions or systems ineffective for fire extinguishment.

A.5.2 Testing on additional alloys can be necessary in order to meet the needs of the end user. Water additive solutions should be tested for compatibility with the materials with which they will be used in accordance with Chapter 5.

A.5.2.7.7 Common degreasers can include all-purpose cleaners and dishwasher soaps. The chosen degreaser should be used for all comparative testing.

A.5.3 Examples of aircraft would include an air tanker or helicopter with fixed tanks.

A.5.5.1 Examples of applications where this could occur include use in fire extinguishers, pre-primed sprinkler systems, booster tanks, and suction tanks.

A.5.7.1 Twenty-eight day biodegradability: if the additive is >60 percent biodegraded, it is considered readily biodegradable. Forty-two day biodegradability: if the additive is not readily biodegradable but is >60 percent biodegraded after 42 days, the additive is considered to be biodegradable.

A.7.2 Although water additive solutions and Class B foams are required to pass Class B fire performance tests to obtain a listing, the tests are different. Some of the most important differences are as follows:

(1) The tested application rate for water additive solutions is different from the tested application rate for Class B foam solutions in NFPA 11.
(2) The burnback resistance time is 180 seconds for water additive solutions compared to 360 seconds for foam solutions.
(3) The published application rate for water additive solutions is 5/3 × test application rate (rounded up) compared to 5/3 for protein and fluoroprotein foam and 5/2 for AFFF and FFFP.

A.7.2.9 Ghost flames or intermittent "flashovers" can occur. They are not to be considered a part of the burnback area unless sustained burning occurs for more than 30 seconds.

A.7.3 Although water additive solutions and Class B foams are required to pass Class B fire performance tests to obtain a listing, the tests are different. Some of the most important differences are as follows:

(1) The tested application rate for water additive solutions in NFPA 18A is different from the tested application rate for Class B foam solutions in UL 162.
(2) The burnback or sealability requirements for water additive solutions are less than those for agents tested to UL 162.
(3) The application rate in NFPA 18A is 10.19 $(L/min)/m^2$ $(0.25\ gpm/ft^2)$, which is a 5/2 safety factor over the test application rate. This is the same safety factor as applied to AFFF and FFFP.

Experience with the extinguishment of fires in extreme depth such as tank or dike fires is limited, if any.

Copyright National Fire Protection Association
Provided by IHS under license with NFPA
No reproduction or networking permitted without license from IHS
Not for Resale

Application	Listed Concentration	Listed Application Rate	Listing Agency
Spill Fire	3%	6.89 (L/min)m^2 (0.17 gpm/ft^2)	UL
Pool Fire	6%	10.19 (L/min)m^2 (0.25 gpm/ft^2)	UL
Fuel in Depth Fire	Not Listed	Not Listed	—
3D Aviation	3%	43.15 L/min (11.4 gpm) solution/gpm of fuel flow	UL
3D Industrial	3%	64.73 L/min (17.1 gpm) solution/gpm of fuel flow	UL
Polar Solvent	Not Listed	Not Listed	—
Vapor Mitigation	See Listing	See Listing	UL

FIGURE A.8.2 Completed Label Example.

A.7.4.3 A slight adjustment in fuel flow is permitted to ensure that both top plates of the vertical cascade receive equal quantities of fuel flowing down both sides of the front vertical column of the cascade test device.

A.7.6.1 An emulsifying agent is one that is capable of rendering the fuel nonflammable by encapsulating the hydrocarbon molecules.

A.7.6.3 This represents the application ratio (Agent:Fuel: Water).

A.7.7 Fuel in depth is intended to apply to fires in "deep" fuels such as those contained in dikes and storage tanks.

A.8.2 For a completed label example, see Figure A.8.2.

A.9.1 The method whereby the water additive is added to water is not herein specified. The solution can be premixed in tanks or can result from bringing the wetting agent into contact with water by any suitable proportioning device, providing said device is approved in accordance with applicable standards.

A.9.2.2 Where such equipment is also used to take suction from a hydrant supplied by potable water, extra care should be exercised to prevent contamination of such potable water supplies with the wetting agent.

A.9.3 In such installations consideration should be given primarily to limitations outlined in Chapter 4 and to the following:

(1) Possibility of increased water damage due to the high absorption ability of the wetting agent solution
(2) Possibility of increased floor loads due to the retention of large volumes of wetting agent solution
(3) Potential for contaminating the public water supply when supplying a fixed system through the fire department connection

If, during pre-incident planning, supplying a fixed system with a wetting agent solution is considered, an engineering evaluation should be conducted.

A.10.1 Due to its greater penetrating power, wetting agent solution is capable of passing through small openings that would be impassable to water. For this reason it will often be found that old, but apparently sound, equipment will have a tendency to leak when charged with wetting agent solution, especially at worn packing glands. Packing glands, retainers, bushings, threaded joints, and screw unions should be inspected and replaced as necessary, and regular inspections made thereafter.

Annex B Residual Fire Retardancy

This annex is not a part of the requirements of this NFPA document but is included for informational purposes only.

B.1 Residual fire retardancy is defined as the retardant effects that are provided by a water additive after all the moisture contained in the water additive solution has been removed by evaporation.

B.1.1 The residual fire retardancy is determined by utilizing the test beds.

B.1.2 The moisture content of the treated fuel beds is monitored until they reach equilibrium.

B.1.3 Once equilibrium is reached, the fuel beds are burned in the wind tunnel.

B.1.4 To accomplish the burning, a starter bed 0.9 m (3 ft) long is prepared identically to the standard fuel beds (same fuel, fuel loading, and porosity) and conditioned.

Copyright National Fire Protection Association
Provided by IHS under license with NFPA
No reproduction or networking permitted without license from IHS
Not for Resale

B.1.5 The starter bed is placed upwind of the treated bed and ignited by an electronically heated wire placed across the width of the fuel bed.

B.1.6 The starter bed provides an established flame front that impinges on the treated bed.

B.1.7 When the flame front reaches each 152 mm (6 in.) point along the test bed, a switch is manually pressed to record the advance of the flame front.

B.1.8 The bed weight is then recorded at 10-second intervals throughout the test burn.

B.1.9 At the conclusion of the burn test, the rates of spread and weight loss are calculated based on the fire spread and weight loss over the 0.9 m to 2.1 m (3 ft to 7 ft) portion of the test bed.

B.1.10 A minimum of three beds of each fuel type are burned to determine the average residual fire retardancy.

B.1.11 Untreated fuel beds and fuel beds treated with water are used as a standard and for comparison.

B.1.12 In order to be considered effective as a residual fire retardant, as defined herein, the average performance of the beds treated with the water additive solution has to be greater than comparable beds treated with plain water by at least as great as two times the standard deviation of the average value.

The percent reduction in rates of spread and weight loss is calculated as follows:

$$\frac{\left(\frac{\text{Rated Spread}_{\text{Untreated}} - \text{Treated}}{\text{Untreated}}\right) + \left(\frac{\text{Weight Loss}_{\text{Untreated}} - \text{Treated}}{\text{Untreated}}\right)}{2} = \%\ \text{Reduction}$$

The rate of spread and weight loss of beds treated with the water additive solution has to be a minimum of two times the standard deviation greater than the average rate of spread and weight loss of the beds treated with plain water.

Annex C ICAL Radiant Panel Test for Exposure Protection

This annex is not a part of the requirements of this NFPA document but is included for informational purposes only.

C.1 General Description.

C.1.1 The resistance to ignition of a Class A fuel treated with a water additive needs to exceed 15 minutes as determined using ICAL-based testing protocols (NIST GCR 00-792).

C.1.2 The ICAL radiant panel replicates several scenarios, including burning brands in close proximity to the siding, burning shrubbery near the house, mild to moderate radiant heat from a wildland fire, and intense radiation for a relatively brief duration.

C.1.3 An ICAL apparatus conforms with the principles of ASTM E 1623 that includes an approximately 1.5 m × 1.5 m (4.9 ft × 4.9 ft) propane fired radiant panel, the means to measure heat flux across the surface of a specimen as a function of distance from the panel, a load cell on a movable cart, and an exhaust hood.

C.2 Test Protocol. A modified ICAL test protocol should be employed to evaluate the fire retarding effects of temporary, water-based exposure protection gels on wood and plastic sidings.

C.2.1 Treated and untreated wood, plastic siding, and windows mounted in wood sidings should be used and exposed at a heat flux of 15 and 25 kW/m^2.

C.2.2 The "T"-burner will be modified for use as the ignition source (the head of the igniter retained, only the length of the tube and the method of connection to the apparatus changed; as described in California Technical Bulletin 129).

C.3 Application Water Additive Solution. The exposure protection gel should be prepared at the manufacturer's recommended mix level.

C.3.1 Physical and chemical characteristics should be measured and described.

C.3.2 Application of the water additive solution should be controlled by maintaining a constant water flow rate and pressure.

C.3.3 A consistent coating thickness of 6 mm to 10 mm (0.25 in. to 0.36 in.) should be achieved by spraying the substrate for approximately 35 seconds.

C.3.4 Weight pick up after each application should be made to verify the consistency of the application rate.

C.4 Measurements. During the tests the following measurements should be made:

(1) Time to smoke, ignition, and full flaming over the surface of the specimen at the selected heat flux
(2) Observations of sustained flaming over the exposed surface and/or failure of the coating
(3) Weight of the specimen prior to treatment
(4) Weight of the specimen after treatment
(5) Weight loss rate during drying
(6) Weight loss rate during heat exposure, prior to ignition

Video tape and still photographs should be taken during the test.

C.5 Test Procedure. Plywood T1-11 sheets shall be used for the substrate and cut into 1 m × 1 m panels.

C.5.1 A single heavy coat of red latex paint shall be applied to each panel and allowed to dry in a conditioned environment until equilibrium moisture is reached (1 to 2 weeks).

C.5.2 The panels shall be instrumented with two type K thermocouples at the center of each panel, one placed at the surface of the panel and the other located 1 cm away from the surface of the panel.

C.6 Calibration. The ICAL radiant panel shall then be calibrated for heat flux as a function of the distance between the panel face and the specimen surface.

C.6.1 Specimens shall be exposed to heat flux at exposures of 15 kW/m^2 and 25 kW/m^2 at distances of 0.79 m and 0.46 m, respectively.

C.6.2 A distance of 3.23 m (10.6 ft) shall correspond with the "drying" heat exposure of 1 kW/m^2.

C.7 Specimen. The support frame shall be weighed and a specimen mounted on the support frame, and then re-weighed.

Copyright National Fire Protection Association
Provided by IHS under license with NFPA
No reproduction or networking permitted without license from IHS
Not for Resale

C.7.1 The specimen shall then be sprayed and reweighed to determine the weight of the coating on the specimen.

C.7.2 The weight of the specimen shall be recorded at 5-minute intervals during the drying period and every 15 seconds during exposure to the predetermined heat flux.

C.7.3 Temperature and relative humidity of the surrounding test area shall have been recorded before each experiment.

Annex D Three-Dimensional Fire Test Apparatus

This annex is not a part of the requirements of this NFPA document but is included for informational purposes only.

D.1 Figure D.1(a) through Figure D.1(f) depict the apparatus used for three-dimensional fire testing.

Annex E Informational References

E.1 Referenced Publications. The documents or portions thereof listed in this annex are referenced within the informational sections of this standard and are not part of the requirements of this document unless also listed in Chapter 2 for other reasons.

E.1.1 NFPA Publications. National Fire Protection Association, 1 Batterymarch Park, Quincy, MA 02169-7471.

NFPA 11, *Standard for Low-, Medium-, and High-Expansion Foam*, 2005 edition.

E.1.2 Other Publications.

E.1.2.1 ASTM Publications. ASTM International, 100 Barr Harbor Drive, P.O. Box C700, West Conshohocken, PA 19428-2959.

ASTM E 1623, *Standard Test Method for Determination of Fire and Thermal Parameters of Materials, Products, and Systems Using an Intermediate Scale Calorimeter (ICAL)*, 2004.

E.1.2.2 NIST Publications. National Institute of Standards and Technology, 100 Bureau Drive, Gaithersburg, MD 20899-1070.

NIST GCR 00-792, *An Investigation of the Effectiveness of Fire Resistant Durable Agents on Residential Siding Using an ICAL-Based Testing Protocol, 2000*.

E.1.2.3 UL Publications. Underwriters Laboratories Inc., 333 Pfingsten Road, Northbrook, IL 60062-2096.

UL 162, *Foam Equipment and Liquid Concentrates*, 1994.

UL 300, *Fire Testing of Fire Extinguishing Systems for Protection of Commercial Cooking Equipment,* 2005.

UL 711/ULC S508, *Rating and Fire Testing of Fire Extinguishers*, 2004.

E.1.2.4 State of California Publications. State of California Department of Consumer Affairs, Bureau of Home Furnishing and Thermal Insulation, 3485 Orange Grove Avenue, North Highlands, CA 95660.

California Technical Bulletin 129, *Flammability Test for Mattresses for Use in Public Buildings*, 1992.

E.2 Informational References. (Reserved)

E.3 References for Extracts in Informational Sections.

NFPA 11, *Standard for Low-, Medium-, and High-Expansion Foam*, 2005 edition.

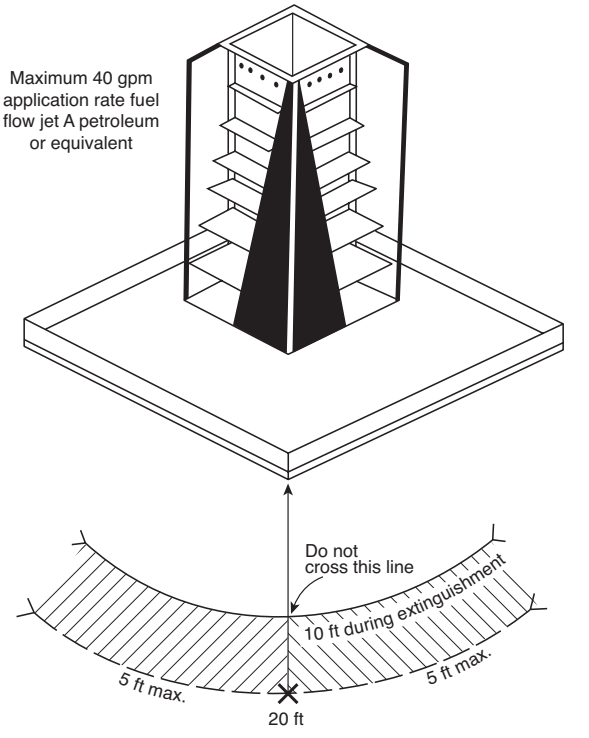

For SI units, 1 ft = 0.304 m, 1 gpm = 0.063 L/sec.

FIGURE D.1(a) Fire Fighter Start Position.

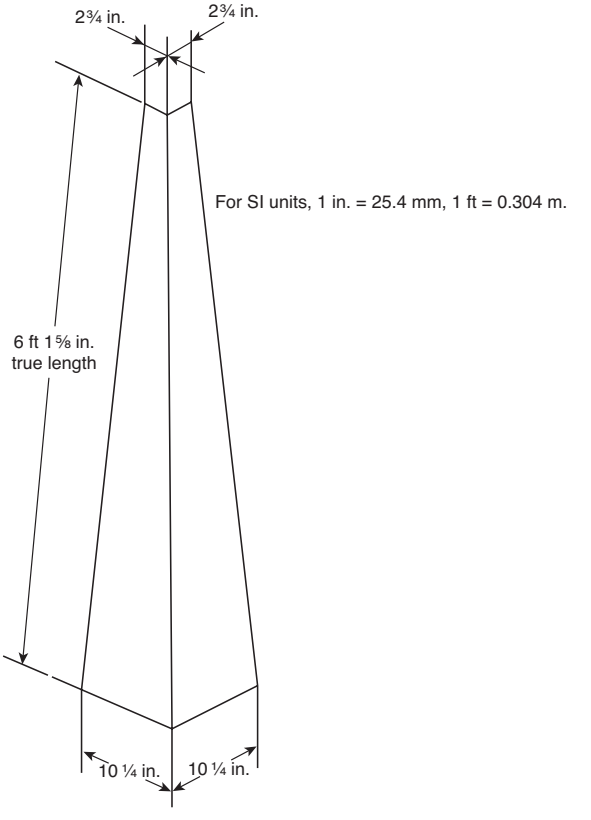

FIGURE D.1(b) Corner Plate Detail.

Copyright National Fire Protection Association
Provided by IHS under license with NFPA
No reproduction or networking permitted without license from IHS
Not for Resale

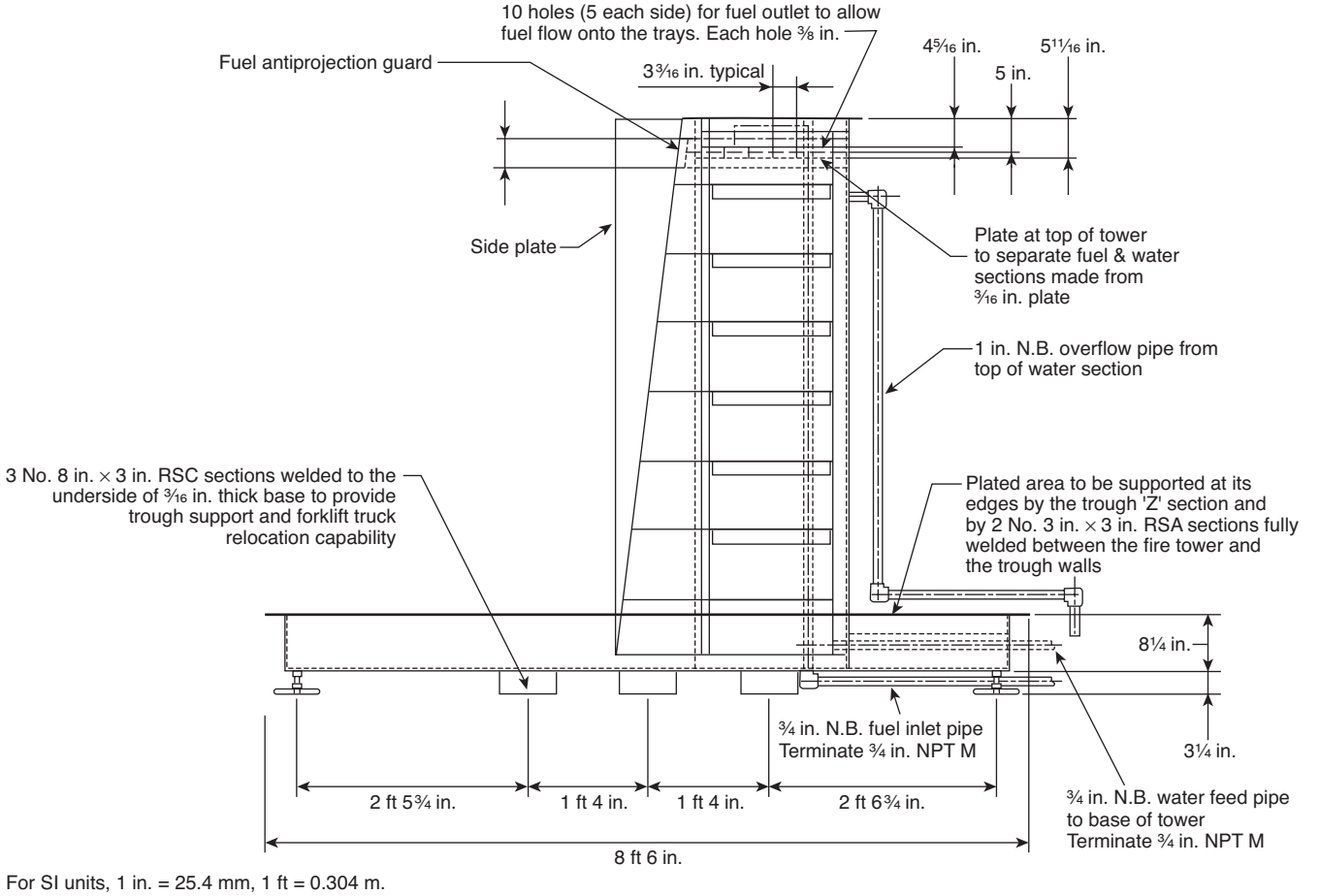

For SI units, 1 in. = 25.4 mm, 1 ft = 0.304 m.

FIGURE D.1(c) FAA — Running Fuel Fire Cascade, 2.4 m × 2.4 m (8 ft × 8 ft) Basin — Tower 0.6 m × 0.6 m (2 ft × 2 ft) Side Elevation on the Fire Tower and Water Trough.

Copyright National Fire Protection Association
Provided by IHS under license with NFPA
No reproduction or networking permitted without license from IHS
Not for Resale

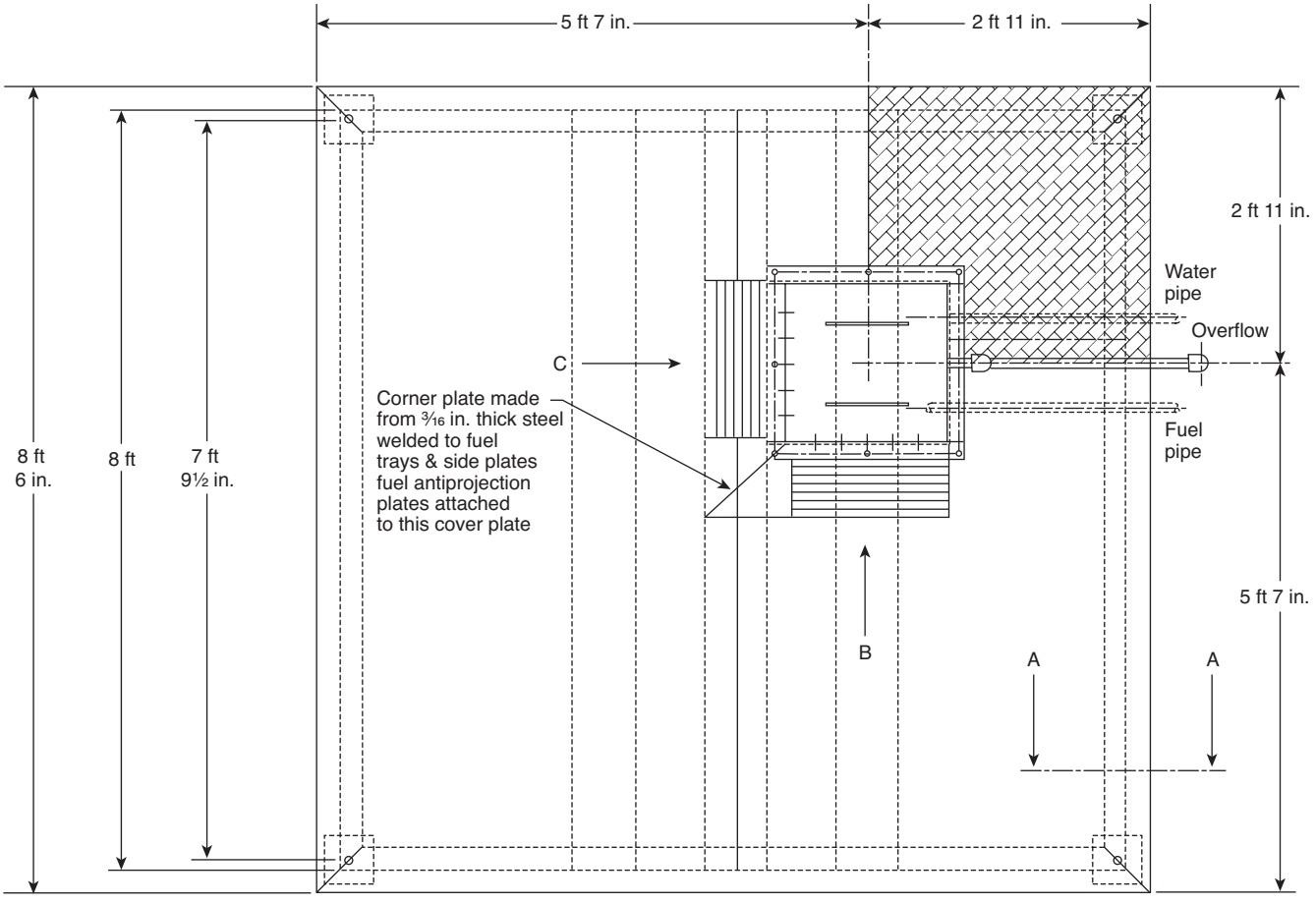

For SI units, 1 in. = 25.4 mm, 1 ft = 0.304 m.

FIGURE D.1(d) Plan View of the Fire Tower and Water Trough.

Copyright National Fire Protection Association
Provided by IHS under license with NFPA
No reproduction or networking permitted without license from IHS
Not for Resale

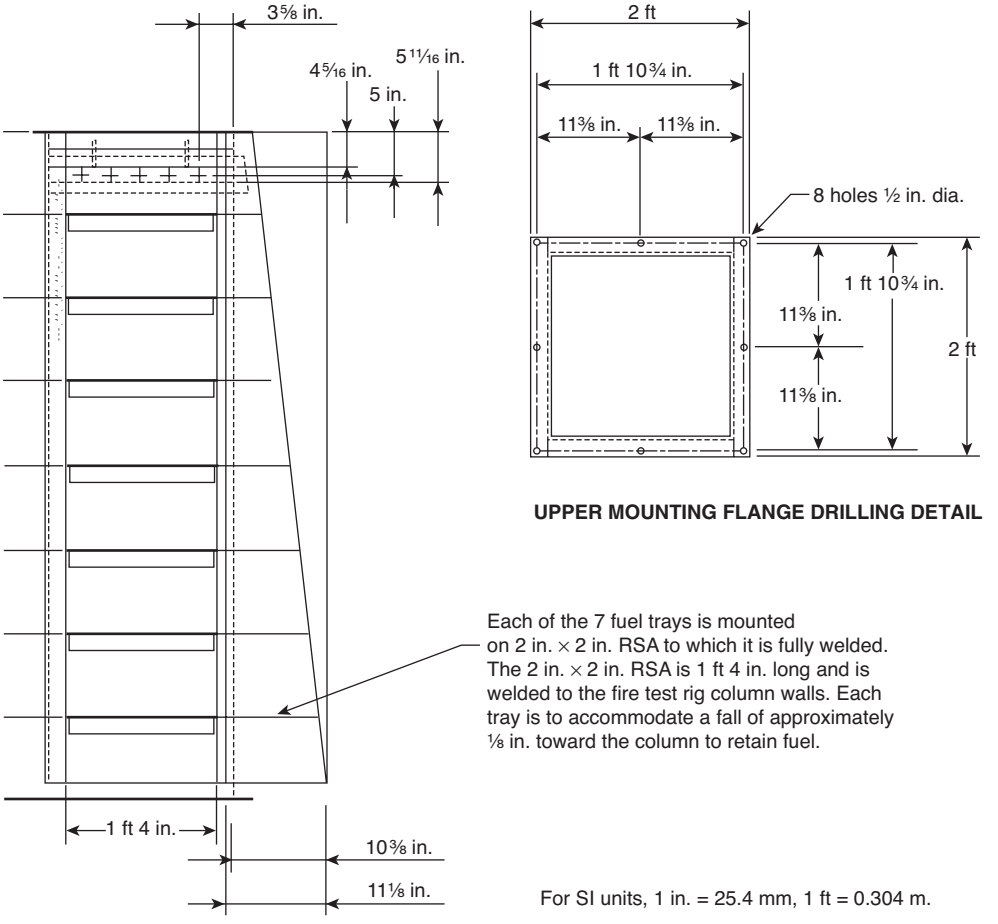

FIGURE D.1(e) Side Elevation of the Fire Tower (Omitting the Water Trough for Clarity).

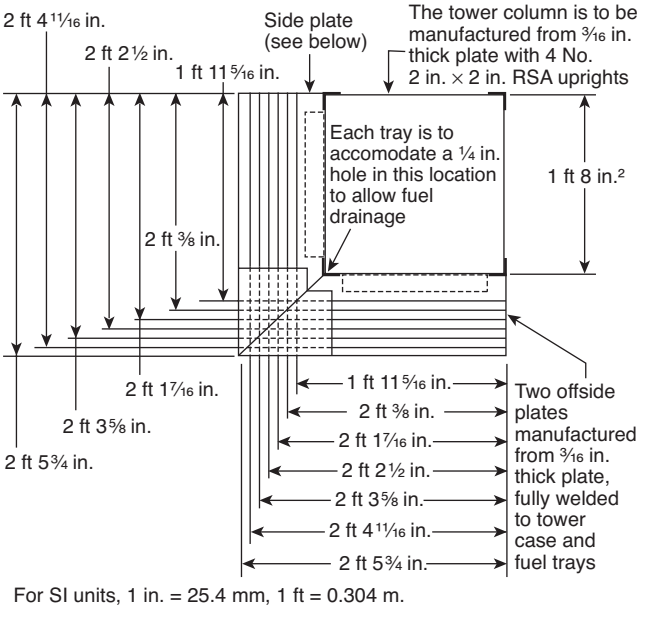

FIGURE D.1(f) Plan View of the Fire Tower (Omitting the Upper Flange for Clarity).

Copyright National Fire Protection Association
Provided by IHS under license with NFPA
No reproduction or networking permitted without license from IHS
Not for Resale

Index

Copyright © 2007 National Fire Protection Association. All Rights Reserved.

The copyright in this index is separate and distinct from the copyright in the document that it indexes. The licensing provisions set forth for the document are not applicable to this index. This index may not be reproduced in whole or in part by any means without the express written permission of NFPA.

-A-

Application of standard 1.3, A.1.3
Application rate
Definition 3.3.1
Labeling ..... 8.2(5)
Pool fire test 7.3.10, A.7.3
Wood crib fire 5.10.3
Wood panel fire 5.9.3
Approved (definition) 3.2.1, A.3.2.1
Aquatic toxicity 5.2.6.3
Authoring having jurisdiction (definition) 3.2.2, A.3.2.2
Aviation applications, evaluation for ..... 7.4.1.1, 7.4.2.2, 7.4.7.3, 7.6.2.2(6)

-B-

Biodegradability 5.7
Definition 3.3.2

-C-

Class A fires
Definition 3.3.3
Exposure protection, radiant panel test for ..... Annex C
Class B fires 4.2.3, A.4.2.3.2
Definition 3.3.4, A.3.3.4
Test methods ..... Chap. 7
Fuel in depth fire test 7.7
Pool fire test 7.3, A.7.3
Spill fire test 7.2, A.7.2
Three-dimensional fuel fire test ..... 7.4, A.7.4.3, Annex D
Vapor mitigation tests 7.6, A.7.6.1, A.7.6.3
Class C fires 4.2.4, A.4.2.4
Class D fires 4.2.5
Combustible liquids (definition) 3.3.5
Compatibility of water additive
With nonmetallic materials 5.6
Hardness test 5.6.4
Samples 5.6.2
Volume test 5.6.3
With other water additives 4.3, A.4.3
Compressed air systems 7.2.4.1, 7.2.6.1, 7.2.10, 7.3.1.2, 7.4.7.1, 7.4.7.2
Concentrates ..... *see* Water additive concentrates
Concentrations
Class B—three-dimensional fuel fire test 7.4.1.2
Definition 3.3.6, A.3.3.6
Use of specified concentrations 4.4
Wood crib fire 5.10.2
Wood panel fire test 5.9.2
Containers, concentrate ..... *see* Water additive concentrates, Containers
Cooking appliances, fires in 4.2.3.2, A.4.2.3.2
Cooking media, combustible 4.2.3.2, A.4.2.3.2

-D-

Definitions ..... Chap. 3
Degreasers A.5.2.7.7
Demulsification (definition) 3.3.7, A.3.3.7
Discharge device (definition) 3.3.8, A.3.3.8

-E-

Eductor (inductor) (definition) 3.3.9
Electrical equipment, energized 4.2.4, A.4.2.4
Emulsification
Definition 3.3.10
Test 7.6.1, A.7.6.1
Emulsifier (definition) 3.3.11
Emulsion (definition) 3.3.12, A.3.3.12
Equivalency to standard 1.5
Exposure protection, radiant panel test for ..... Annex C
Extinguishing equipment and systems
Cooking appliance fires, use for 4.2.3.2, A.4.2.3.2
Fixed systems
Inspection, maintenance, and testing 10.1, A.10.1
Installation of 9.3, A.9.3
Standard equipment 9.1, A.9.1
Storage of solution more than 30 days 5.5.1, A.5.5.1

-F-

Fire department supply requirements 9.2, A.9.2.2
Fixed extinguishing systems ..... *see* Extinguishing equipment and systems
Fixed monitor (cannon) (definition) 3.3.13, A.3.3.13
Flammable liquids (definition) ..... 3.3.14; *see also* Class B fires
Flash point 5.8

-H-

Handline (definition) 3.3.15, A.3.3.15
Hydrocarbons
Definition 3.3.16
Rendering fuel nonflammable, additive test for 7.6.1, A.7.6.1

-I-

Indirect attack (definition) 3.3.17
Industrial applications, evaluation for 7.4.1.1, 7.4.2.3, 7.4.7.4
Inspection, maintenance, and testing ..... Chap. 10

-L-

Labeled (definition) 3.2.3
Labeling, concentrate container 8.2, A.8.2
Limitations, water additives 4.2, A.4.2.3.2, A.4.2.4
Listed (definition) 3.2.4, A.3.2.4

-M-

Mammalian toxicity 5.2.6.1
Measurement, units of 1.6
Micelle (definition) 3.3.18, A.3.3.18
Miscibility
Of concentrate 5.2.2
Definition 3.3.19

-N-

Nozzles 7.2.8.4, 7.3.1.1, 7.3.5, 7.3.6
Air-aspirated 7.2.4.1, 7.2.6.1, 7.2.10, 7.3.1.2, 7.4.7.1, 7.4.7.2
Non–air-aspirated 7.2.4.1, 7.4.7.1

Copyright National Fire Protection Association
Provided by IHS under license with NFPA
No reproduction or networking permitted without license from IHS
Not for Resale

-P-

Packaging of concentrates 8.1
Portable monitor (cannon) (definition) 3.3.20
Portable tanks, separate supplies for 9.2.2, A.9.2.2
Potable water A.9.2.2, A.9.3
Premixing 9.2.1
Properties and general test protocols ..... Chap. 5
- Biodegradability 5.7
- Compatibility with nonmetallic materials 5.6
  - Hardness test 5.6.4
  - Samples 5.6.2
  - Volume test 5.6.3
- Concentrate handling, opening, and inspection 5.2.3.2
- Concentrate miscibility 5.2.2
- Concentrate pH 5.2.4
- Concentrate pour point 5.2.1
- Concentrate stability 5.2.3
- Concentrate viscosity 5.2.5
- Flash point 5.8
- Intergranular corrosion test 5.3, A.5.3
- Separation on standing 5.5, A.5.5.1
- Toxicity 5.2.6
- Uniform corrosion 5.2.7, 5.3
- Wood crib fire 5.10
- Wood panel fire 5.9

Proportioning
- Definition 3.3.21
- Labeling ..... 8.2(4)

Purpose of standard 1.2

-R-

Radiant panel test for exposure protection ..... Annex C
References ..... Chap. 2, Annex E
Residual fire retardancy ..... Annex B
Retroactivity of standard 1.4

-S-

Scope of standard 1.1
Shall (definition) 3.2.5
Solutions ..... *see* Water additive solutions
Standard (definition) 3.2.6
Supply ..... Chap. 9
Surface active agent (surfactant) (definition) 3.3.22
Surface fires, extinguishing of 5.9.1
Surface tension (definition) 3.3.23
Synthetic or artificial sea water 7.2.6.2, 7.2.7.1
- Definition 3.3.24

System requirements 9.1, A.9.1

-T-

Tanks, supply requirements 9.2, A.9.2.2
- Premixing 9.2.1
- Separate supplies 9.2.2

Tests
- Class B fires, methods for ..... *see* Class B fires
- General protocols ..... *see* Properties and general test protocols
- Radiant panel test for exposure protection ..... Annex C
- Residual fire retardancy ..... Annex B
- Three-dimensional fire test apparatus ..... Annex D

Three-dimensional fire
- Definition 3.3.25
- Fire test 7.4, A.7.4.3
- Test apparatus ..... Annex D

Toxicity, additive 5.2.6

-U-

Units of measurement 1.6
Uses, water additives ..... Chap. 4

-W-

Water additive (definition) 3.3.26, A.3.3.26
Water additive concentrates
- Containers 5.2.3.1, 5.2.3.2.1, 5.2.3.2.4, 8.1.2, 8.2, A.8.2
- Definition 3.3.27, A.3.3.27
- Inspection of 10.2
- Labeling of container 8.2
- Mixing with water only 4.1.2
- Packaging 8.1
- Properties and general test protocols ..... *see* Properties and general test protocols

Water additive solutions
- Compatibility 4.3.2, 4.3.3
- Concentrations, specified 4.4
- Definition 3.3.28, A.3.3.28
- Limitations, use 4.2, A.4.2.3.2, A.4.2.4
- Properties and general test protocols ..... *see* Properties and general test protocols

Water-reactive chemicals, fires involving 4.2.2
Wood crib fire 5.10
Wood panel fire 5.9

Copyright National Fire Protection Association
Provided by IHS under license with NFPA
No reproduction or networking permitted without license from IHS
Not for Resale

Sequence of Events Leading to Issuance of an NFPA Committee Document

Step 1: Call for Proposals

- Proposed new Document or new edition of an existing Document is entered into one of two yearly revision cycles, and a Call for Proposals is published.

Step 2: Report on Proposals (ROP)

- Committee meets to act on Proposals, to develop its own Proposals, and to prepare its Report.
- Committee votes by written ballot on Proposals. If two-thirds approve, Report goes forward. Lacking two-thirds approval, Report returns to Committee.
- Report on Proposals (ROP) is published for public review and comment.

Step 3: Report on Comments (ROC)

- Committee meets to act on Public Comments to develop its own Comments, and to prepare its report.
- Committee votes by written ballot on Comments. If two-thirds approve, Report goes forward. Lacking two-thirds approval, Report returns to Committee.
- Report on Comments (ROC) is published for public review.

Step 4: Technical Report Session

- "*Notices of intent to make a motion"* are filed, are reviewed, and valid motions are certified for presentation at the Technical Report Session. ("Consent Documents" that have no certified motions bypass the Technical Report Session and proceed to the Standards Council for issuance.)
- NFPA membership meets each June at the Annual Meeting Technical Report Session and acts on Technical Committee Reports (ROP and ROC) for Documents with "certified amending motions."
- Committee(s) vote on any amendments to Report approved at NFPA Annual Membership Meeting.

Step 5: Standards Council Issuance

- Notification of intent to file an appeal to the Standards Council on Association action must be filed within 20 days of the NFPA Annual Membership Meeting.
- Standards Council decides, based on all evidence, whether or not to issue Document or to take other action, including hearing any appeals.

Committee Membership Classifications

The following classifications apply to Technical Committee members and represent their principal interest in the activity of the committee.

M *Manufacturer:* A representative of a maker or marketer of a product, assembly, or system, or portion thereof, that is affected by the standard.

U *User:* A representative of an entity that is subject to the provisions of the standard or that voluntarily uses the standard.

I/M *Installer/Maintainer:* A representative of an entity that is in the business of installing or maintaining a product, assembly, or system affected by the standard.

L *Labor:* A labor representative or employee concerned with safety in the workplace.

R/T *Applied Research/Testing Laboratory:* A representative of an independent testing laboratory or independent applied research organization that promulgates and/or enforces standards.

E *Enforcing Authority:* A representative of an agency or an organization that promulgates and/or enforces standards.

I *Insurance:* A representative of an insurance company, broker, agent, bureau, or inspection agency.

C *Consumer:* A person who is, or represents, the ultimate purchaser of a product, system, or service affected by the standard, but who is not included in the *User* classification.

SE *Special Expert:* A person not representing any of the previous classifications, but who has a special expertise in the scope of the standard or portion thereof.

NOTES;
1. "Standard" connotes code, standard, recommended practice, or guide.
2. A representative includes an employee.
3. While these classifications will be used by the Standards Council to achieve a balance for Technical Committees, the Standards Council may determine that new classifications of members or unique interests need representation in order to foster the best possible committee deliberations on any project. In this connection, the Standards Council may make appointments as it deems appropriate in the public interest, such as the classification of "Utilities" in the National Electrical Code Committee.
4. Representatives of subsidiaries of any group are generally considered to have the same classification as the parent organization.

Copyright National Fire Protection Association
Provided by IHS under license with NFPA
No reproduction or networking permitted without license from IHS
Not for Resale

NFPA Technical Committee Document Proposal Form

NOTE: All Proposals must be received by 5:00 pm EST/EDST on the published Proposal Closing Date.

For further information on the standards-making process, please contact the Codes and Standards Administration at 617-984-7249 or visit www.nfpa.org/codes.

For technical assistance, please call NFPA at 617-770-3000.

FOR OFFICE USE ONLY

Log #:

Date Rec'd:

Please indicate in which format you wish to receive your ROP/ROC ☐ **electronic** ☐ **paper** ☒ **download**
(Note: If choosing the download option, you must view the ROP/ROC from our website; no copy will be sent to you.)

Date April 1, 200X **Name** John J. Doe **Tel. No.** 716-555-1234

Company Air Canada Pilot's Association

Street Address 123 Summer Street Lane **City** Lewiston **State** NY **Zip** 14092

Please indicate organization represented (if any)

1. (a) NFPA Document Title National Fuel Gas Code **NFPA No. & Year** 54, 200X Edition

(b) Section/Paragraph 3.3

2. Proposal Recommends (check one): ☐ new text ☒ revised text ☐ deleted text

3. Proposal (include proposed new or revised wording, or identification of wording to be deleted): [Note: Proposed text should be in legislative format; i.e., use underscore to denote wording to be inserted (inserted wording) and strike-through to denote wording to be deleted (~~deleted wording~~).]

Revise definition of effective ground-fault current path to read:

3.3.78 Effective Ground-Fault Current Path. An intentionally constructed, permanent, low impedance electrically conductive path designed and intended to carry ~~underground~~ electric fault current ~~conditions~~ from the point of a ground fault on a wiring system to the electrical supply source.

4. Statement of Problem and Substantiation for Proposal: (Note: State the problem that would be resolved by your recommendation; give the specific reason for your Proposal, including copies of tests, research papers, fire experience, etc. If more than 200 words, it may be abstracted for publication.)

Change uses proper electrical terms.

5. Copyright Assignment

(a) ☐ **I am the author of the text or other material (such as illustrations, graphs) proposed in this Proposal.**

(b) ☒ **Some or all of the text or other material proposed in this Proposal was not authored by me. Its source is as follows** (please identify which material and provide complete information on its source)**:**

ABC Co.

I agree that any material that I author, either individually or with others, in connection with work performed by an NFPA Technical Committee shall be considered to be works made for hire for the NFPA. To the extent that I retain any rights in copyright as to such material, or as to any other material authored by me that I submit for the use of an NFPA Technical Committee in the drafting of an NFPA code, standard, or other NFPA document, I hereby grant and assign all and full rights in copyright to the NFPA. I further agree and acknowledge that I acquire no rights in any publication of the NFPA and that copyright and all rights in materials produced by NFPA Technical Committees are owned by the NFPA and that the NFPA may register copyright in its own name.

Signature (Required)

PLEASE USE SEPARATE FORM FOR EACH PROPOSAL • NFPA Fax: (617) 770-3500

Mail to: Secretary, Standards Council, National Fire Protection Association, 1 Batterymarch Park, Quincy, MA 02169-7471

1/19/2007

SAMPLE

Copyright National Fire Protection Association
Provided by IHS under license with NFPA
No reproduction or networking permitted without license from IHS
Not for Resale

NFPA Technical Committee Document Proposal Form

NOTE: All Proposals must be received by 5:00 pm EST/EDST on the published Proposal Closing Date.

For further information on the standards-making process, please contact the Codes and Standards Administration at 617-984-7249 or visit www.nfpa.org/codes.

For technical assistance, please call NFPA at 617-770-3000.

FOR OFFICE USE ONLY

Log #: _____

Date Rec'd: _____

Please indicate in which format you wish to receive your ROP/ROC ☐ electronic ☐ paper ☐ download
(Note: If choosing the download option, you must view the ROP/ROC from our website; no copy will be sent to you.)

Date _____ **Name** _____ **Tel. No.** _____

Company _____

Street Address _____ **City** _____ **State** _____ **Zip** _____

Please indicate organization represented (if any) _____

1. (a) NFPA Document Title _____ **NFPA No. & Year** _____

(**b) Section/Paragraph** _____

2. Proposal Recommends (check one): ☐ new text ☐ revised text ☐ deleted text

3. Proposal (include proposed new or revised wording, or identification of wording to be deleted): [Note: Proposed text should be in legislative format; i.e., use underscore to denote wording to be inserted (inserted wording) and strike-through to denote wording to be deleted (~~deleted wording~~).]

4. Statement of Problem and Substantiation for Proposal: (Note: State the problem that would be resolved by your recommendation; give the specific reason for your Proposal, including copies of tests, research papers, fire experience, etc. If more than 200 words, it may be abstracted for publication.)

5. Copyright Assignment

(a) ☐ I am the author of the text or other material (such as illustrations, graphs) proposed in this Proposal.

(b) ☐ Some or all of the text or other material proposed in this Proposal was not authored by me. Its source is as follows (please identify which material and provide complete information on its source)**:**

_____

I agree that any material that I author, either individually or with others, in connection with work performed by an NFPA Technical Committee shall be considered to be works made for hire for the NFPA. To the extent that I retain any rights in copyright as to such material, or as to any other material authored by me that I submit for the use of an NFPA Technical Committee in the drafting of an NFPA code, standard, or other NFPA document, I hereby grant and assign all and full rights in copyright to the NFPA. I further agree and acknowledge that I acquire no rights in any publication of the NFPA and that copyright and all rights in materials produced by NFPA Technical Committees are owned by the NFPA and that the NFPA may register copyright in its own name.

Signature (Required) _____

PLEASE USE SEPARATE FORM FOR EACH PROPOSAL • NFPA Fax: (617) 770-3500

Mail to: Secretary, Standards Council, National Fire Protection Association, 1 Batterymarch Park, Quincy, MA 02169-7471

1/19/2007

--`,,```,,,,````-`-`,,`,,`,`,,`---

Copyright National Fire Protection Association
Provided by IHS under license with NFPA
No reproduction or networking permitted without license from IHS

Not for Resale