NFPA 17A

Standard for Wet Chemical Extinguishing Systems

2002 Edition

NFPA, 1 Batterymarch Park, PO Box 9101, Quincy, MA 02269-9101
An International Codes and Standards Organization

NFPA License Agreement

This document is copyrighted by the National Fire Protection Association (NFPA), 1 Batterymarch Park, Quincy, MA 02269-9101 USA.
All rights reserved.

NFPA grants you a license as follows: The right to download an electronic file of this NFPA document for temporary storage on one computer for purposes of viewing and/or printing one copy of the NFPA document for individual use. Neither the electronic file nor the hard copy print may be reproduced in any way. In addition, the electronic file may not be distributed elsewhere over computer networks or otherwise. The hard copy print may only be used personally or distributed to other employees for their internal use within your organization.

Copyright National Fire Protection Association
Provided by IHS under license with NFPA
No reproduction or networking permitted without license from IHS

Not for Resale

Copyright ©
National Fire Protection Association, Inc.
One Batterymarch Park
Quincy, Massachusetts 02269

IMPORTANT NOTICE ABOUT THIS DOCUMENT

NFPA codes, standards, recommended practices, and guides, of which the document contained herein is one, are developed through a consensus standards development process approved by the American National Standards Institute. This process brings together volunteers representing varied viewpoints and interests to achieve consensus on fire and other safety issues. While the NFPA administers the process and establishes rules to promote fairness in the development of consensus, it does not independently test, evaluate, or verify the accuracy of any information or the soundness of any judgments contained in its codes and standards.

The NFPA disclaims liability for any personal injury, property or other damages of any nature whatsoever, whether special, indirect, consequential or compensatory, directly or indirectly resulting from the publication, use of, or reliance on this document. The NFPA also makes no guaranty or warranty as to the accuracy or completeness of any information published herein.

In issuing and making this document available, the NFPA is not undertaking to render professional or other services for or on behalf of any person or entity. Nor is the NFPA undertaking to perform any duty owed by any person or entity to someone else. Anyone using this document should rely on his or her own independent judgment or, as appropriate, seek the advice of a competent professional in determining the exercise of reasonable care in any given circumstances.

The NFPA has no power, nor does it undertake, to police or enforce compliance with the contents of this document. Nor does the NFPA list, certify, test or inspect products, designs, or installations for compliance with this document. Any certification or other statement of compliance with the requirements of this document shall not be attributable to the NFPA and is solely the responsibility of the certifier or maker of the statement.

NOTICES

All questions or other communications relating to this document and all requests for information on NFPA procedures governing its codes and standards development process, including information on the procedures for requesting Formal Interpretations, for proposing Tentative Interim Amendments, and for proposing revisions to NFPA documents during regular revision cycles, should be sent to NFPA headquarters, addressed to the attention of the Secretary, Standards Council, National Fire Protection Association, 1 Batterymarch Park, P.O. Box 9101, Quincy, MA 02269-9101.

Users of this document should be aware that this document may be amended from time to time through the issuance of Tentative Interim Amendments, and that an official NFPA document at any point in time consists of the current edition of the document together with any Tentative Interim Amendments then in effect. In order to determine whether this document is the current edition and whether it has been amended through the issuance of Tentative Interim Amendments, consult appropriate NFPA publications such as the *National Fire Codes*® Subscription Service, visit the NFPA website at www.nfpa.org, or contact the NFPA at the address listed above.

A statement, written or oral, that is not processed in accordance with Section 5 of the Regulations Governing Committee Projects shall not be considered the official position of NFPA or any of its Committees and shall not be considered to be, nor be relied upon as, a Formal Interpretation.

The NFPA does not take any position with respect to the validity of any patent rights asserted in connection with any items which are mentioned in or are the subject of this document, and the NFPA disclaims liability for the infringement of any patent resulting from the use of or reliance on this document. Users of this document are expressly advised that determination of the validity of any such patent rights, and the risk of infringement of such rights, is entirely their own responsibility.

Users of this document should consult applicable federal, state, and local laws and regulations. NFPA does not, by the publication of this document, intend to urge action that is not in compliance with applicable laws, and this document may not be construed as doing so.

--`,,`,,-`-`,,`,,`,`,,`---

Copyright National Fire Protection Association
Provided by IHS under license with NFPA
No reproduction or networking permitted without license from IHS

Not for Resale

Licensing Policy

This document is copyrighted by the National Fire Protection Association (NFPA). By making this document available for use and adoption by public authorities and others, the NFPA does not waive any rights in copyright to this document.

1. Adoption by Reference—Public authorities and others are urged to reference this document in laws, ordinances, regulations, administrative orders, or similar instruments. Any deletions, additions, and changes desired by the adopting authority must be noted separately. Those using this method are requested to notify the NFPA (Attention: Secretary, Standards Council) in writing of such use. The term "adoption by reference" means the citing of title and publishing information only.

2. Adoption by Transcription—A. Public authorities with lawmaking or rule-making powers only, upon written notice to the NFPA (Attention: Secretary, Standards Council), will be granted a royalty-free license to print and republish this document in whole or in part, with changes and additions, if any, noted separately, in laws, ordinances, regulations, administrative orders, or similar instruments having the force of law, provided that: (1) due notice of NFPA's copyright is contained in each law and in each copy thereof; and (2) that such printing and republication is limited to numbers sufficient to satisfy the jurisdiction's lawmaking or rule-making process. **B.** Once this NFPA Code or Standard has been adopted into law, all printings of this document by public authorities with lawmaking or rule-making powers or any other persons desiring to reproduce this document or its contents as adopted by the jurisdiction in whole or in part, in any form, upon written request to NFPA (Attention: Secretary, Standards Council), will be granted a nonexclusive license to print, republish, and vend this document in whole or in part, with changes and additions, if any, noted separately, provided that due notice of NFPA's copyright is contained in each copy. Such license shall be granted only upon agreement to pay NFPA a royalty. This royalty is required to provide funds for the research and development necessary to continue the work of NFPA and its volunteers in continually updating and revising NFPA standards. Under certain circumstances, public authorities with lawmaking or rule-making powers may apply for and may receive a special royalty where the public interest will be served thereby.

3. Scope of License Grant—The terms and conditions set forth above do not extend to the index of this document.

(For further explanation, see the Policy Concerning the Adoption, Printing, and Publication of NFPA Documents, which is available upon request from the NFPA.)

--`,,,``,-`-`,,`,,`,`,,`---

Copyright National Fire Protection Association
Provided by IHS under license with NFPA
No reproduction or networking permitted without license from IHS

Not for Resale

Copyright © 2002, National Fire Protection Association, All Rights Reserved

NFPA 17A

Standard for

Wet Chemical Extinguishing Systems

2002 Edition

This edition of NFPA 17A, *Standard for Wet Chemical Extinguishing Systems*, was prepared by the Technical Committee on Dry and Wet Chemical Extinguishing Systems and acted on by NFPA at its May Association Technical Meeting held May 19–23, 2002, in Minneapolis, MN. It was issued by the Standards Council on July 19, 2002, with an effective date of August 8, 2002, and supersedes all previous editions.

This edition of NFPA 17A was approved as an American National Standard on July 19, 2002.

Origin and Development of NFPA 17A

The Dry Chemical Extinguishing Systems Committee was activated in 1952. On April 6, 1983, the Standards Council received a request to assign the subject of wet chemical extinguishing systems to the appropriate committee. Listed systems had been available for some time. After the Foam Committee declined the request, the Dry Chemical Committee was asked to assume responsibility for the project. In May 1983, the Dry Chemical Extinguishing Systems Committee voted to accept the assignment and requested that the Standards Council expand the Committee Scope to include the new topic. The Committee also requested that the new document be identified as NFPA 17A, *Standard for Wet Chemical Extinguishing Systems.* A subcommittee met in June 1983 to develop the text. In November 1984, the Council approved a request to change the name of the Committee to the Committee on Dry and Wet Chemical Extinguishing Systems. The 1990 edition was a partial revision of the 1986 edition.

The 1998 edition of this standard was revised to clarify the requirements for protection of unclosable openings and equipment shutdown.

The changes to the 2002 edition consist of an editorial reformatting of the standard to comply with the NFPA *Manual of Style.* Technical changes include clarification of requirements for fuel and power shutoff upon actuation of the system and rewriting the requirement for simultaneous systems operation.

Copyright National Fire Protection Association
Provided by IHS under license with NFPA
No reproduction or networking permitted without license from IHS
Not for Resale

Technical Committee on Dry and Wet Chemical Extinguishing Systems

Edward J. Kaminski, *Chair*
Schirmer Engineering Corporation, NV [SE]

John H. Lawlor, *Secretary*
Keystone Fire Protection Company, PA [IM]
Rep. National Association of Fire Equipment Distributors

Paul E. Buchhofer, Building Inspection Underwriters, Inc., PA [E]
Samuel S. Dannaway, S. S. Dannaway Associates, Inc., HI [SE]
Jack K. Dick, Heiser Incorporated, NY [M]
Alan L. Hall, Loss Prevention Consultants, Inc., IL [SE]
Robert Kasiski, Factory Mutual Research Corporation, MA [I]
William Klingenmaier, Tyco Suppression Systems, WI [M]
George A. Krabbe, Automatic Fire Controls Inc., AZ [IM]
Rep. Fire Suppression Systems Association
Roland J. Land, Risk Control Consultants, LLC, NJ [SE]
Michael P. McGreal, Firedyne Engineering, PC, IL [SE]
J. R. Nerat, Badger Fire Protection/Williams Holdings, MI [M]
Rep. NFPA Industrial Fire Protection Section
James Shea, Kidde-Fenwal, Inc., MA [M]
Rep. Fire Equipment Manufacturers' Association
Richard A. Shiraishi, Kemper Insurance Companies, CA [I]
Craig Voelkert, Amerex Corporation, AL [M]
Kenneth W. Zastrow, Underwriters Laboratories Inc., IL [RT]

Alternates

Richard J. Biehl, Tyco Suppression Systems, WI [M]
(Alt. to W. Klingenmaier)
Richard L. Lupien, Kidde-Fenwal, Inc., MA [M]
(Alt. to J. Shea)
Norbert W. Makowka, National Association of Fire Equipment Distributors, IL [IM]
(Alt. to J. H. Lawlor)
James J. Urban, Underwriters Laboratories Inc., IL [RT]
(Alt. to K. W. Zastrow)
Charles F. Willms, Fire Suppression Systems Association, NC [M]
(Alt. to G. A. Krabbe)

Nonvoting

Walter M. Haessler, The Carlotta, CA
(Member Emeritus)
Edward D. Leedy, Naperville, IL
(Member Emeritus)

James D. Lake, NFPA Staff Liaison

Committee Scope: This Committee shall have primary responsibility for documents on the design, installation, operation, testing, maintenance, and use of dry and wet chemical extinguishing systems for fire protection.

This list represents the membership at the time the Committee was balloted on the final text of this edition. Since that time, changes in the membership may have occurred. A key to classifications is found at the back of the document.

NOTE: Membership on a committee shall not in and of itself constitute an endorsement of the Association or any document developed by the committee on which the member serves.

Copyright National Fire Protection Association
Provided by IHS under license with NFPA
No reproduction or networking permitted without license from IHS
Not for Resale

Contents

Chapter 1 Administration **17A–** 4
1.1 Scope **17A–** 4
1.2 Purpose **17A–** 4
1.3 Application **17A–** 4
1.4 Retroactivity **17A–** 4
1.5 Equivalency **17A–** 4
1.6 Units and Formulas **17A–** 4
1.7 Qualifications **17A–** 4

Chapter 2 Referenced Publications **17A–** 4
2.1 General **17A–** 4
2.2 NFPA Publications **17A–** 4
2.3 Other Publications **17A–** 4

Chapter 3 Definitions **17A–** 4
3.1 General **17A–** 4
3.2 NFPA Official Definitions **17A–** 4
3.3 General Definitions **17A–** 5

Chapter 4 Components **17A–** 5
4.1 General **17A–** 5
4.2 Detectors **17A–** 5
4.3 Discharge Nozzles **17A–** 5
4.4 Operating Devices **17A–** 6
4.5 Pipe and Fittings, Tubing, Hose **17A–** 6
4.6 Wet Chemical **17A–** 6
4.7 Electrical Wiring and Equipment **17A–** 6
4.8 Indicators **17A–** 6

Chapter 5 System Requirements **17A–** 6
5.1 General **17A–** 6
5.2 System Actuation **17A–** 6
5.3 Supervision **17A–** 7
5.4 System Location **17A–** 7
5.5 Discharge Nozzles **17A–** 7
5.6 Special Requirements **17A–** 7

Chapter 6 Plans and Acceptance Tests **17A–** 8
6.1 Specifications **17A–** 8
6.2 Review and Certification **17A–** 8
6.3 Plans **17A–** 8
6.4 Approval of Installations **17A–** 8

Chapter 7 Inspection, Maintenance, and Recharging **17A–** 8
7.1 General **17A–** 8
7.2 Owner's Inspection **17A–** 9
7.3 Maintenance **17A–** 9
7.4 Recharging **17A–** 9
7.5 Hydrostatic Testing **17A–** 9

Annex A Explanatory Material **17A–**10

Annex B Informational References **17A–**12

Index **17A–**14

Copyright National Fire Protection Association
Provided by IHS under license with NFPA
No reproduction or networking permitted without license from IHS
Not for Resale

NFPA 17A

Standard for

Wet Chemical Extinguishing Systems

2002 Edition

NOTICE: An asterisk (*) following the number or letter designating a paragraph indicates that explanatory material on the paragraph can be found in Annex A.

Changes other than editorial are indicated by a vertical rule beside the paragraph, table, or figure in which the change occurred. These rules are included as an aid to the user in identifying changes from the previous edition. Where one or more complete paragraphs have been deleted, the deletion is indicated by a bullet between the paragraphs that remain.

A reference in brackets [ ] following a section or paragraph indicates material that has been extracted from another NFPA document. As an aid to the user, Annex B lists the complete title and edition of the source documents for both mandatory and nonmandatory extracts. Editorial changes to extracted material consist of revising references to an appropriate division in this document or the inclusion of the document number with the division number when the reference is to the original document. Requests for interpretations or revisions of extracted text shall be sent to the appropriate technical committee.

Information on referenced publications can be found in Chapter 2 and Annex B.

Chapter 1 Administration

1.1* Scope. The provisions of this standard apply to the design, installation, operation, testing, and maintenance of pre-engineered wet chemical fire extinguishing systems that discharge wet chemical from fixed nozzles and piping by means of expellant gas. It contains only the essential requirements and recommendations needed to make the standard workable in the hands of those skilled in this field.

1.2 Purpose. This standard is prepared for the use and guidance of those charged with the purchasing, designing, installing, testing, inspecting, approving, listing, operating, or maintaining of pre-engineered wet chemical fire-extinguishing systems in order that such equipment will function as intended throughout its life.

1.3 Application. Minimum requirements are specified for restaurant, commercial, and institutional hoods, plenums, ducts, and associated cooking appliances.

1.4 Retroactivity.

1.4.1 The provisions of this document are considered necessary to provide a reasonable level of protection from loss of life and property from fire. They reflect situations and the state of the art at the time the standard was issued.

1.4.2 Unless otherwise noted, it is not intended that the provisions of this document be applied to facilities, equipment, structures, or installations that were existing or approved for construction or installation prior to the effective date of this document.

1.5 Equivalency. Nothing in this standard is intended to prevent the use of new methods or devices, provided sufficient technical data are submitted to the authority having jurisdiction to demonstrate that the new method or device is equivalent in quality, effectiveness, durability, and safety to that prescribed by this standard.

1.6 Units and Formulas.

1.6.1 When a primary value for measurement in English units as given in this standard is followed by a parenthetical equivalent value in metric units, the primary English value stated is to be regarded as the requirement.

1.6.1.1* Metric units of measurement in this standard are in accordance with the modernized metric system known as the International System of Units (SI).

1.6.1.2 The conversion procedure used for the SI units is to multiply the primary English quantity by the conversion factor and then round the result if necessary to the appropriate number of significant digits.

1.7* Qualifications. Only persons properly trained shall be considered competent to design, install, and service pre-engineered wet chemical systems.

Chapter 2 Referenced Publications

2.1 General. The documents or portions thereof listed in this chapter are referenced within this standard and shall be considered part of the requirements of this document.

2.2 NFPA Publications. National Fire Protection Association, 1 Batterymarch Park, P. O. Box 9101, Quincy, MA 02269-9101.

NFPA 70, *National Electrical Code®*, 2002 edition.
NFPA 72®, National Fire Alarm Code®, 2002 edition.

2.3 Other Publications.

2.3.1 UL Publication. Underwriters Laboratories Inc., 333 Pfingsten Road, Northbrook, IL 60062.

UL 300, *Fire Testing of Fire Extinguishing Systems for Protection of Restaurant Cooking Areas*, 1996 edition.

Chapter 3 Definitions

3.1 General. The definitions contained in this chapter shall apply to the terms used in this standard. Where terms are not included, common usage of the terms shall apply.

3.2 NFPA Official Definitions.

3.2.1* Approved. Acceptable to the authority having jurisdiction.

3.2.2* Authority Having Jurisdiction (AHJ). The organization, office, or individual responsible for approving equipment, materials, an installation, or a procedure.

3.2.3* Listed. Equipment, materials, or services included in a list published by an organization that is acceptable to the authority having jurisdiction and concerned with evaluation of products or services, that maintains periodic inspection of production of listed equipment or materials or periodic evaluation of services, and whose listing states that either the equipment, material, or service meets appropriate designated stan-

Copyright National Fire Protection Association
Provided by IHS under license with NFPA
No reproduction or networking permitted without license from IHS
Not for Resale

dards or has been tested and found suitable for a specified purpose.

3.2.4 Shall. Indicates a mandatory requirement.

3.2.5 Should. Indicates a recommendation or that which is advised but not required.

3.2.6 Standard. A document, the main text of which contains only mandatory provisions using the word "shall" to indicate requirements and which is in a form generally suitable for mandatory reference by another standard or code or for adoption into law. Nonmandatory provisions shall be located in an appendix or annex, footnote, or fine-print note and are not to be considered a part of the requirements of a standard.

3.3 General Definitions.

3.3.1 Auxiliary Equipment. Listed equipment used in conjunction with the wet chemical systems, for example, to shut down power, fuel, or ventilation to the hazard being protected or to initiate signaling devices.

3.3.2 Discharge Nozzle. Device from which the extinguishing agent is discharged to provide for suppression of a fire in the designated hazard.

3.3.3 Duct.

3.3.3.1 Branch Duct. The duct work that contains the exhaust air from a single hood or hazard area.

3.3.3.2 Common Duct. The duct work containing the exhaust air from two or more branch ducts.

3.3.4 Expellant Gas. The medium used to discharge extinguishing agent from its container.

3.3.5 Indicator. A mechanical or electrical device that shows when an extinguishing system or critical component of it is ready to operate, or if it has already operated.

3.3.6* Inspection. A visual examination of a system or portion thereof to verify that it appears to be in operating condition and is free of physical damage. [**820:**1.5]

3.3.7 Liquid Agent. See Wet Chemical.

3.3.8 Maintenance. Work, including, but not limited to, repair, replacement, and service, performed to ensure that equipment operates properly. [**10:**3.3]

3.3.9 Manual.

3.3.9.1* Manufacturer's Listed Installation and Maintenance Manual. The pamphlet referenced as part of the listing of the wet chemical extinguishing system.

3.3.9.2 Owner's Manual. A pamphlet containing the manufacturer's recommendations for the proper inspection and operation of the extinguishing system.

3.3.10* Operating Devices. Mechanical, electrical, or pneumatic devices involved in the operation of a system.

3.3.11 Operation.

3.3.11.1 Automatic Operation. Operation without human intervention. This operation includes, but is not limited to, heat, rate of heat rise, smoke, or pressure change. [**25:**3.3]

3.3.11.2 Manual Operation. Operation of a system or its components through human action. [**25:**3.3]

3.3.12 Pipe. Circular conduit for conveying the wet chemical to the discharge nozzle(s). Wherever the term *pipe* is used in this standard, it shall be understood also to mean tube.

3.3.13* Pre-Engineered Systems. Those having predetermined flow rates, nozzle pressures, and quantities of extinguishing agent. These systems have the specific pipe size, maximum and minimum pipe lengths, flexible hose specifications, number of fittings, and number and types of nozzles prescribed by a testing laboratory. The maximum and minimum pipe lengths and the number of fittings shall be permitted to be expressed in equivalent feet of pipe. The hazards protected by these systems are specifically limited as to type and size by a testing laboratory, based on actual fire tests. Limitations on hazards that are permitted to be protected by these systems and piping and nozzle configurations are contained in the manufacturer's listed installation and maintenance manual, which is part of the listing of the system. [**17:**3.3]

3.3.14 Recharge. The replacement of the extinguishing agent and expellant gas. [**17:**3.3]

3.3.15 Shutoff Devices. Devices that operate simultaneously with the extinguishing system to shut off fuel and power to appliances protected by the system and other appliances required to be shut off upon operation of the system.

3.3.16 Signal. A status indication communicated by electrical or other means. [**72:**3.3]

3.3.17 Trained. One who has undergone the instructions necessary to safely design and install and reliably perform the maintenance and recharge service.

3.3.18 Transport Canada (TC). Has jurisdiction over design and transportation of compressed gas cylinders and cartridges.

3.3.19 U.S. Department of Transportation (DOT). The department that has jurisdiction over the design and transportation of compressed gas cylinders and cartridges.

3.3.20 Wet Agent. See Wet Chemical.

3.3.21* Wet Chemical. Normally an aqueous solution of organic or inorganic salts or a combination thereof that forms an extinguishing agent.

Chapter 4 Components

4.1 General. Only system components referenced or permitted in the manufacturer's listed installation and maintenance manual or alternate components that are listed for use with the specific extinguishing system shall be used.

4.2 Detectors. Detectors shall be listed or approved devices that are capable of detecting heat.

4.3 Discharge Nozzles. See Section 5.5.

4.3.1 Discharge nozzles shall be listed for their intended use.

4.3.1.1 Discharge nozzles shall be provided with an internal strainer or a separate listed strainer located immediately upstream of the nozzle.

4.3.1.2 Discharge nozzles shall be of brass, stainless steel, or other corrosion-resistant materials, or be protected inside and out against corrosion.

4.3.1.3 Discharge nozzles shall be made of noncombustible materials and shall withstand the expected fire exposure without deformation.

Copyright National Fire Protection Association
Provided by IHS under license with NFPA
No reproduction or networking permitted without license from IHS
Not for Resale

4.3.1.4* Discharge nozzles shall be permanently marked for identification.

4.3.1.5 All discharge nozzles shall be provided with caps or other suitable devices to prevent the entrance of grease vapors, moisture, or other foreign materials into the piping.

4.3.1.6 The protection device shall blow off, open, or blow out upon agent discharge.

4.4 Operating Devices.

4.4.1 Operating devices shall be listed.

4.4.1.1 Operating devices shall be designed for the service they will encounter and shall not be rendered inoperative or susceptible to accidental operation.

4.4.1.2 Operating devices shall be designed to function properly through a minimum temperature range from 32°F to 120°F (0°C to 49°C) or marked to indicate their temperature limitations.

4.4.2 Manual Actuators.

4.4.2.1 Manual actuators shall not require a force of more than 40 lb (178 N).

4.4.2.2 Manual actuators shall not require a movement of more than 14 in. (356 mm) to secure operation.

4.4.2.3 All manual actuators shall be provided with operating instructions.

4.4.2.4 These instructions shall be permitted to include the use of pictographs and shall have lettering at least ¼ in. (6.35 mm) in height. *(See 5.2.1.4.)*

4.4.2.5 All remote manual operating devices shall be identified as to the hazard they protect.

4.4.3 Shutoff Devices.

4.4.3.1 On activation of any cooking equipment fire-extinguishing system, all sources of fuel and electric power that produce heat to all equipment protected by the system shall be shut down.

4.4.3.2 Gas appliances not requiring protection but located under the same ventilation equipment shall also be shut off.

4.4.3.3 Steam supplied from an external source shall not be required to be shut down.

4.4.3.4 Solid fuel cooking operations shall not be required to shut down.

4.4.3.5 Exhaust fans and dampers are not required to be shut down on system actuation as the systems have been tested under both zero- and high-velocity flow conditions.

4.4.3.6 If the expellant gas is used to pneumatically operate these devices, the gas shall be taken prior to its entry into the wet chemical tank.

4.4.3.7 Shutoff devices shall require manual resetting prior to fuel or power being restored.

4.5 Pipe and Fittings, Tubing, Hose.

4.5.1* General. Pipe and associated fittings shall be of noncombustible material having physical and chemical characteristics compatible with the wet chemical solution.

4.5.2 Galvanized pipe and fittings shall not be used unless specifically listed with the system.

4.5.3 The pressure rating of the pipe fittings and connection joints shall withstand the maximum expected pressure in the piping system.

4.5.4 Pipe, tubing, hose, and fitting materials and types shall be in accordance with the manufacturer's listed installation and maintenance manual.

4.6 Wet Chemical.

4.6.1* The type of wet chemical used in the system shall be listed for the particular system and recommended by the manufacturer of the wet chemical system.

4.6.2 Wet chemical solutions of different formulations or different manufacturers shall not be mixed.

4.7 Electrical Wiring and Equipment. Electrical wiring and equipment shall be installed in accordance with NFPA 70, *National Electrical Code®*, or the requirements of the authority having jurisdiction.

4.8 Indicators. Wet chemical systems shall be provided with an audible or visual indicator to show that the system is in a ready condition or is in need of recharging.

Chapter 5 System Requirements

5.1 General.

5.1.1 Wet chemical fire-extinguishing systems shall comply with standard UL 300, *Fire Testing of Fire Extinguishing Systems for Protection of Restaurant Cooking Areas.*

5.1.2 Use. Hazards and equipment that can be protected using wet chemical extinguishing systems include the following:

(1) Restaurant, commercial, and institutional hoods
(2) Plenums, ducts, and filters with their associated cooking appliances
(3) Special grease removal devices
(4) Odor control devices
(5) Energy recovery devices installed in the exhaust system

5.1.3 Applications. The manufacturer's listed installation and maintenance manual shall be consulted for system limitations and applications for which wet chemical extinguishing systems are considered satisfactory protection.

5.1.4 Each protected cooking appliance, individual hood, and branch exhaust duct directly connected to the hood shall be protected by a system or systems designed for simultaneous operation.

5.1.5 Where two or more hazards can be simultaneously involved in fire by reason of their proximity, the hazards shall be protected by either of the following:

(1) Individual systems installed to operate simultaneously
(2) A single system designed to protect all hazards that can be simultaneously involved

5.1.5.1 Any hazard that will allow fire propagation from one area to another shall constitute a single fire hazard.

5.2 System Actuation.

5.2.1 All systems shall have both automatic and manual methods of actuation.

5.2.1.1 The automatic and manual means of system actuation, external to the control head or releasing device, shall be

Copyright National Fire Protection Association
Provided by IHS under license with NFPA
No reproduction or networking permitted without license from IHS
Not for Resale

separate and independent of each other so that a failure of one will not impair the operation of the other.

5.2.1.2 When a listed releasing mechanism is used employing a single line for mechanical detection and remote manual control, the remote manual control shall be installed inline, prior to all detection devices, so malfunction of one does not impede operation of the other.

5.2.1.3 Automatic detection and system actuation shall be in accordance with the manufacturer's listed installation and maintenance manual.

5.2.1.4 All devices necessary for proper operation of the system shall function simultaneously with the system operation.

5.2.1.5 Operation of any manual actuator shall be all that is required to bring about the full operation of the system.

5.2.1.6 At least one manual actuator shall be provided for each system.

5.2.1.7 All operating devices shall be designed, located, installed, or protected so that they are not subject to mechanical, environmental, or other conditions that could render them inoperative or cause inadvertent operation of the system.

5.2.1.8 An audible or visual indicator shall be provided to show that the system has operated, that personnel response is needed, and that the system is in need of recharge.

5.2.1.9 The extinguishing system shall be connected to the fire alarm system, if provided, in accordance with the requirements of *NFPA 72®, National Fire Alarm Code®*, so that the actuation of the extinguishing system will sound the fire alarm as well as provide the function of the extinguishing system.

5.2.1.10* A readily accessible means for manual activation shall be located in a path of egress. When manual activation is used for cooking related protection, the manual activation device shall be installed no more than 48 in. (1200 mm), nor less than 42 in. (1067 mm) above the floor and shall clearly identify the hazard protected.

5.2.1.11 Automatic systems protecting common exhaust ducts only shall not require a remote manual actuator.

5.2.1.12 The means for mechanical actuator(s) shall be mechanical and shall not rely on electrical power for actuation.

5.2.1.13 Electrical power shall be permitted to be used for manual activation if a reserve power supply is provided or if supervision is provided as per Section 5.3.

5.3 Supervision.

5.3.1 Where supervision of any or all of the following is provided, it shall be designed to give an indication of trouble in the following:

(1) Automatic detection system
(2) Electrical actuation circuit
(3) Electrical power supply

5.3.2 Signals indicating the failure of supervised devices or equipment shall give prompt and positive indication of any failure and shall be distinctive from signals indicating operation or hazardous conditions.

5.4* System Location.

5.4.1 Wet chemical containers and expellant gas assemblies shall be located within the temperature range specified in the manufacturer's listed installation and maintenance manual.

5.4.2 If ambient temperatures outside the manufacturer's operating temperature range are expected, protection shall be provided to maintain the temperature within the listed range.

5.4.3 Wet chemical containers and expellant gas assemblies shall not be located where they could be subjected to mechanical, chemical, or other damage.

5.4.4 Where damage due to chemical or mechanical exposure is expected, protective devices such as enclosures or guards acceptable to the authority having jurisdiction shall be provided.

5.4.5 Wet chemical containers and expellant gas assemblies shall be accessible for inspection, maintenance, and recharge.

5.4.6 Wet chemical containers and expellant gas assemblies shall be located near the hazard or hazards protected but not where they will be exposed to the fire.

5.5 Discharge Nozzles. See Section 4.3.

5.5.1 All discharge nozzles shall be designed and subsequently located, installed, or protected so that they are not subject to mechanical, environmental, or other conditions that could render them inoperative.

5.5.2 Discharge nozzles shall be connected and supported.

5.6 Special Requirements.

5.6.1 Systems protecting two or more hoods or plenums, or both, that meet the requirements of 5.1.5 shall be installed to ensure the simultaneous operation of all systems protecting the hoods, plenums, and associated cooking appliances located below the hoods.

5.6.1.1 The building owner(s) shall be responsible for the protection of a common exhaust duct(s) used by more than one tenant.

5.6.1.2 The tenant shall be responsible for the protection of common exhaust duct(s) serving hoods located within the tenant's space and up to the point of connection to the building owner's common exhaust duct.

5.6.1.3 The tenant's common duct shall be considered a branch duct to the building owner's common duct.

5.6.1.4 A single listed detection device shall be permitted for more than one appliance when installed in accordance with the system's listing.

5.6.1.5 At least one fusible link or heat detector shall be installed within each exhaust duct opening in accordance with the manufacturer's listing.

5.6.1.6 A fusible link or heat detector shall be provided above each protected cooking appliance and in accordance with the extinguishing system manufacturer's listing.

5.6.1.6.1 Fusible links or heat detectors located at or within 12 in. (305 mm) into the exhaust duct opening and above the protected appliance shall be permitted to meet the requirements of 5.6.1.6.

5.6.1.7 Where the pipe or other conduit penetrates a duct or hood, the penetration shall have a liquidtight continuous external weld or shall be sealed by a listed device.

5.6.2* Protection of Common Exhaust Duct.

5.6.2.1 Common exhaust ducts shall be protected by one of the following methods:

Copyright National Fire Protection Association
Provided by IHS under license with NFPA
No reproduction or networking permitted without license from IHS
Not for Resale

(1)*Simultaneous operation of all independent hood, duct, and appliance protection systems
(2)*Simultaneous operation of any hood, duct, and appliance protection system and the system(s) protecting the entire common exhaust duct

5.6.2.1.1 A fusible link or heat detector shall be located at each branch duct–to–common duct connection.

5.6.2.1.2 Actuation of any branch duct–to–common exhaust duct fusible link or heat detector shall actuate the common duct system only, or when all independent systems are connected to a control panel in accordance with *NFPA 72, National Fire Alarm Code.*

5.6.2.2 All sources of fuel or heat to appliances served by the common exhaust duct shall be shut down upon actuation of any protection system in accordance with 4.4.3.

5.6.3* Ignition sources contained within any exhaust system shall be protected and have a separate detection system in accordance with the manufacturer's recommendations and that is approved by the authority having jurisdiction.

5.6.4 Movable cooking equipment shall be provided with a means to ensure that it is correctly positioned in relation to the appliance discharge nozzle during cooking operations.

Chapter 6 Plans and Acceptance Tests

6.1* Specifications. Specifications for wet chemical fire-extinguishing systems shall be drawn up with care under the supervision of a trained person and with the advice of the authority having jurisdiction.

6.1.1 The following items shall be included in the specifications:

(1) Designation of the authority having jurisdiction and indication of whether plans are required
(2) Statement that the installation conforms to this standard and meets the approval of the authority having jurisdiction
(3) Indication that only equipment that is referenced in the manufacturer's listed installation and maintenance manual or alternate suppliers' components that are listed for use with the specific extinguishing system shall be used
(4) Identification of special auxiliary devices acceptable to the system manufacturer and the authority having jurisdiction
(5) List of the specific tests, if any, that are required
(6) Identification of the hazard to be protected and including such information as physical dimensions, cooking appliances, energy sources for each appliance, and air-handling equipment

6.2* Review and Certification. Design and installation of systems shall be performed only by persons properly trained and qualified to design and/or install the specific system being provided. The installer shall provide certification to the authority having jurisdiction that the installation is in complete agreement with the terms of the listing and the manufacturer's instructions and/or approved design.

6.3 Plans. Where plans are required, the responsibility for their preparation shall be entrusted only to trained persons.

6.3.1 The plans shall be drawn to an indicated scale or be suitably dimensioned and shall be reproducible.

6.3.2 The plans shall contain sufficient detail to enable the authority having jurisdiction to evaluate the protection of the hazard(s).

6.3.3 The details on the system shall include the following:

(1) Size, length, and arrangement of connected piping
(2) Description and location of nozzles

6.3.4 Information shall be submitted pertaining to the following:

(1) The location and function of detection devices
(2) Operating devices
(3) Auxiliary equipment
(4) Electrical circuitry

6.3.5 Approval of Plans. Where plans are required, they shall be submitted to the authority having jurisdiction for approval before work starts.

6.3.6 Where field conditions necessitate any substantial change from the approved plan, the as-installed plans shall be submitted to the authority having jurisdiction for approval.

6.4 Approval of Installations. The completed system shall be tested by trained personnel as required by the manufacturer's listed installation and maintenance manual.

6.4.1 The tests shall determine that the system has been properly installed and will function as intended.

6.4.2 The installer shall certify that the system has been installed in accordance with the approved plans and the manufacturer's listed installation and maintenance manual.

6.4.3* Where required by the authority having jurisdiction, the approval tests shall include a discharge of wet chemical to verify that the system is properly installed and functional.

6.4.4 The owner shall be provided with a copy of the manufacturer's listed installation and maintenance manual or listed owner's manual.

Chapter 7 Inspection, Maintenance, and Recharging

7.1 General.

7.1.1* Storage. Recharging supplies of wet chemical shall be stored in the original closed shipping container supplied by the manufacturer.

7.1.1.1 These containers shall not be opened until the system is recharged.

7.1.1.2 Wet chemical supplies shall be maintained within the manufacturer's recommended storage temperature range.

7.1.2 Expellant Gas. A method and instructions shall be provided for checking the amount or the pressure of expellant gas to ensure that it is sufficient for the proper operation of the system.

7.1.3 Access. System access for inspection or maintenance that requires opening panels in fire chases or ducts, or both, shall not be permitted while any appliance(s) or equipment protected by that system is in operation.

Copyright National Fire Protection Association
Provided by IHS under license with NFPA
No reproduction or networking permitted without license from IHS
Not for Resale

7.1.4* Recharge. After any discharge, or if insufficient charge is noted during an inspection or maintenance procedure, the following procedures shall be conducted in accordance with the manufacturer's listed installation and maintenance manual:

(1) The system shall be properly recharged.
(2) The system shall be placed in the normal operating condition.
(3) The piping shall be flushed in accordance with the manufacturer's recommended instructions (only following a discharge).

7.2 Owner's Inspection.

7.2.1 Inspection shall be conducted on a monthly basis in accordance with the manufacturer's listed installation and maintenance manual or the owner's manual.

7.2.2 Inspections shall include verification of the following:

(1) The extinguishing system is in its proper location.
(2) The manual actuators are unobstructed.
(3) The tamper indicators and seals are intact.
(4) The maintenance tag or certificate is in place.
(5) No obvious physical damage or condition exists that might prevent operation.
(6) The pressure gauge(s), if provided, is in operable range.
(7) The nozzle blowoff caps are intact and undamaged.
(8) The hood, duct, and protected cooking appliances have not been replaced, modified, or relocated.

7.2.3 If any deficiencies are found, appropriate corrective action shall be taken immediately.

7.2.4 Personnel making inspections shall keep records for those extinguishing systems that were found to require corrective actions.

7.2.5 At least monthly, the date the inspection is performed and the initials of the person performing the inspection shall be recorded.

7.2.6 The records shall be retained for the period between the semiannual maintenance inspections.

7.3 Maintenance.

7.3.1* A trained person who has undergone the instructions necessary to perform the maintenance and recharge service reliably and has the applicable manufacturer's listed installation and maintenance manual and service bulletins shall service the wet chemical fire-extinguishing system 6 months apart as outlined in 7.3.2.

7.3.2* At least semiannually, maintenance shall be conducted in accordance with the manufacturer's listed installation and maintenance manual.

7.3.2.1 Maintenance shall include the following:

(1) A check to see that the hazard has not changed
(2) An examination of all detectors, the expellant gas container(s), the agent container(s), releasing devices, piping, hose assemblies, nozzles, signals, all auxiliary equipment, and the liquid level of all nonpressurized wet chemical containers
(3)*Verification that the agent distribution piping is not obstructed

7.3.2.2* Where semiannual maintenance of any wet chemical containers or system components reveals conditions such as, but not limited to, corrosion or pitting in excess of the manufacturer's limits; structural damage or fire damage; or repairs by soldering, welding, or brazing; the affected part(s) shall be replaced or hydrostatically tested in accordance with the recommendations of the manufacturer or the listing agency.

7.3.2.3* All wet chemical systems shall be tested, which shall include the operation of the detection system signals and releasing devices, including manual stations and other associated equipment.

7.3.2.4 Where the maintenance of the system(s) reveals defective parts that could cause an impairment or failure of proper operation of the system(s), the affected parts shall be replaced or repaired in accordance with the manufacturer's recommendations.

7.3.2.5 The maintenance report, with recommendations, if any, shall be filed with the owner or with the designated party responsible for the system.

7.3.2.6* Each wet chemical system shall have a tag or label securely attached, indicating the month and year the maintenance is performed and identifying the person performing the service. Only the current tag or label shall remain in place.

7.3.3* Fixed temperature-sensing elements of the fusible metal alloy type shall be replaced at least annually from the date of installation. They shall be destroyed when removed.

7.3.3.1 The year of manufacture and the date of installation of the fixed temperature-sensing element shall be marked on the system inspection tag. The tag shall be signed or initialed by the installer.

7.3.4 Fixed temperature-sensing elements other than the fusible metal alloy type shall be permitted to remain continuously in service, provided they are inspected and cleaned or replaced if necessary in accordance with the manufacturer's instructions every 12 months or more frequently to ensure proper operation of the system.

7.4 Recharging.

7.4.1 All extinguishing systems shall be recharged after use or as indicated by an inspection or maintenance procedure.

7.4.2 Systems shall be recharged in accordance with the manufacturer's listed installation and maintenance manual.

7.5* Hydrostatic Testing.

7.5.1 The following parts of wet chemical extinguishing systems shall be subjected to a hydrostatic pressure test at intervals not exceeding 12 years:

(1) Wet chemical containers
(2) Auxiliary pressure containers
(3) Hose assemblies

Exception No. 1: Auxiliary pressure containers not exceeding 2-in. (0.05-m) outside diameter and less than 2 ft (0.6 m) in length.

Exception No. 2: Auxiliary pressure containers bearing the DOT "3E" marking.

7.5.2 Wet chemical containers, auxiliary pressure containers, and hose assemblies shall be subjected to a hydrostatic test pressure equal to the marked factory test pressure or the test pressure specified by the manufacturer.

7.5.2.1 No leakage, rupture, or movement of hose couplings shall be permitted.

Copyright National Fire Protection Association
Provided by IHS under license with NFPA
No reproduction or networking permitted without license from IHS
Not for Resale

7.5.2.2 The test procedure shall be in accordance with the manufacturer's detailed written hydrostatic test instructions.

7.5.2.3* Prior to being refilled or transported, in accordance with DOT or TC requirements, containers bearing DOT or TC markings shall be retested or replaced in accordance with the appropriate DOT or TC requirements.

7.5.3 Wet chemical agent removed from the containers prior to hydrostatic testing shall be discarded.

7.5.4 To protect the hazard during hydrostatic testing, if there is no connected reserve, alternate protection acceptable to the authority having jurisdiction shall be provided.

Annex A Explanatory Material

Annex A is not a part of the requirements of this NFPA document but is included for informational purposes only. This annex contains explanatory material, numbered to correspond with the applicable text paragraphs.

A.1.1 The wet chemical systems described in this standard are designed to discharge wet chemical from fixed nozzles and piping by means of expellant gas. The intent of the standard is to present the design considerations applicable to these systems.

The wet chemicals produced by various manufacturers usually are not identical in all characteristics, and each manufacturer designs equipment for use with a specific wet chemical. Therefore, system design principles applicable to the products of one manufacturer are not applicable to the products of another manufacturer. As a result, it is not practical to include system design details as part of this standard. However, such system design details are an integral part of the listing of the systems and are included in the manufacturer's listed installation and maintenance manual.

A.1.6.1.1 See IEEE/ASTM SI 10, *Standard for Use of the International System of Units (SI): The Modern Metric System.*

A.1.7 Although training and qualification might be available elsewhere, it is recommended that such training and qualification be performed by the manufacturer of the equipment being installed, or serviced.

It might be necessary for many of those charged with the purchasing, inspecting, testing, approving, operating, and maintaining of this equipment to consult an experienced fire protection engineer, competent in this field, in order to discharge their respective duties effectively.

A.3.2.1 Approved. The National Fire Protection Association does not approve, inspect, or certify any installations, procedures, equipment, or materials; nor does it approve or evaluate testing laboratories. In determining the acceptability of installations, procedures, equipment, or materials, the authority having jurisdiction may base acceptance on compliance with NFPA or other appropriate standards. In the absence of such standards, said authority may require evidence of proper installation, procedure, or use. The authority having jurisdiction may also refer to the listings or labeling practices of an organization that is concerned with product evaluations and is thus in a position to determine compliance with appropriate standards for the current production of listed items.

A.3.2.2 Authority Having Jurisdiction (AHJ). The phrase "authority having jurisdiction," or its acronym AHJ, is used in NFPA documents in a broad manner, since jurisdictions and approval agencies vary, as do their responsibilities. Where public safety is primary, the authority having jurisdiction may be a federal, state, local, or other regional department or individual such as a fire chief; fire marshal; chief of a fire prevention bureau, labor department, or health department; building official; electrical inspector; or others having statutory authority. For insurance purposes, an insurance inspection department, rating bureau, or other insurance company representative may be the authority having jurisdiction. In many circumstances, the property owner or his or her designated agent assumes the role of the authority having jurisdiction; at government installations, the commanding officer or departmental official may be the authority having jurisdiction.

A.3.2.3 Listed. The means for identifying listed equipment may vary for each organization concerned with product evaluation; some organizations do not recognize equipment as listed unless it is also labeled. The authority having jurisdiction should utilize the system employed by the listing organization to identify a listed product.

A.3.3.6 Inspection. This is done by seeing that the system is in place, that it has not been activated or tampered with, and that there is no obvious physical damage or condition to prevent operation.

A.3.3.9.1 Manufacturer's Listed Installation and Maintenance Manual. It contains a description of the hazards that can be protected as well as the limitations of the wet chemical extinguishing system. This pamphlet also requires that the wet chemical extinguishing system be designed, installed, inspected, maintained, and serviced in accordance with this standard.

A.3.3.10 Operating Devices. Including "actuating devices" initiating operation (automatic detection devices or systems and manual actuation devices such as manual pulls or strike buttons) or "operating devices" responding to the actuation (release mechanisms, shutoff devices, alarms, and auxiliary equipment).

A.3.3.13 Pre-Engineered Systems. These systems have the specific pipe size, maximum and minimum pipe lengths, flexible hose specifications, number of fittings, and number and types of nozzles prescribed by a testing laboratory. The maximum and minimum pipe lengths and the number of fittings shall be permitted to be expressed in equivalent feet of pipe. The hazards protected by these systems are specifically limited as to type and size by a testing laboratory, based on actual fire tests. Limitations on hazards that are permitted to be protected by these systems and piping and nozzle configurations are contained in the manufacturer's listed installation and maintenance manual, which is part of the listing of the system.

A.3.3.21 Wet Chemical. The terms *liquid agent* and *wet agent* are used interchangeably with *wet chemical.*

A.4.3.1.4 Stamping part numbers into the body of the nozzle is an acceptable method of meeting the identification requirement.

A.4.5.1 Pre-engineered systems do not need calculations for flow rate, pressure drop, and nozzle pressure, since they have been tested for fire extinguishment with minimum and maximum piping limitations and minimum and maximum temperature limitations. These limitations have been verified by testing laboratories and are published in the manufacturer's listed installation and maintenance manual.

Copyright National Fire Protection Association
Provided by IHS under license with NFPA
No reproduction or networking permitted without license from IHS
Not for Resale

A.4.6.1 A wet chemical solution is generally, including but not limited to, potassium carbonate–based, potassium acetate–based, potassium citrate–based, or a combination thereof, and mixed with water to form an alkaline solution capable of being discharged through piping or tubing when under expellant gas pressure.

Its effect on fires in common cooking oils and fats is to combine with these materials to form a vapor suppression foam that floats on a liquid surface, such as in deep fat fryers, and effectively prevents reignition of the grease.

Extinguishing Mechanisms. Wet chemical solution applied to flammable liquid surfaces will result in the rapid spreading of a vapor-suppressing foam on the fuel surface. The foam extinguishes and secures the flame by forming a barrier between the liquid fuel and oxygen. This barrier excludes oxygen from the fuel source and eliminates the release of flammable vapors from the fuel surface. The cooling effect of this solution also lowers the temperature of the flammable fuel, further decreasing fuel vapor release.

CAUTION: Wet chemical, when discharged, is in the form of a fine spray. Some of the agent can settle on surrounding surfaces and can have a corrosive effect on electrical components and cooking equipment. Prompt cleanup will minimize staining or corrosion.

A.5.2.1.10 Common exhaust ducts normally are located in concealed areas such that the need for manual discharge of the system may not be readily apparent. It is recommended that the number and location of remote controls, if any, be given careful consideration.

A.5.4 The phrase "wet chemical containers and expellant gas assemblies" is understood to include stored pressure assemblies.

A.5.6.2 One example of each acceptable method is presented in the figures in A.5.6.2.1(1) and A.5.6.2.1(2). These figures are not intended to be all-inclusive. For additional guidance consult the system manufacturer.

A.5.6.2.1(1) Separate cooking appliance, hood, and branch duct systems are interconnected so that they operate simultaneously.

Scenario: A fire is detected by System A. System A, protecting cooking appliances, a hood, and a branch duct, is actuated. Simultaneously, Systems B, C, D, and E are also actuated. Shutdown of all appliances is in accordance with 4.4.3. [*See Figure A.5.6.2.1(1).*]

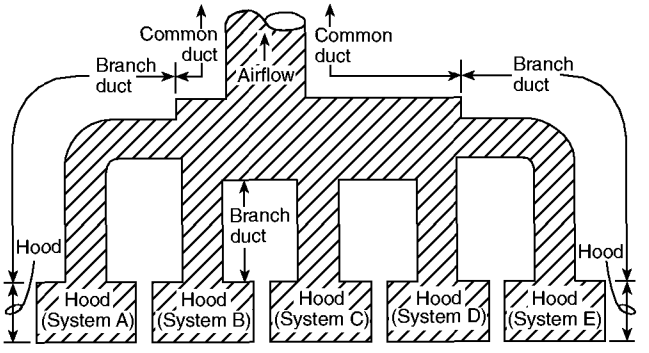

FIGURE A.5.6.2.1(1) Simultaneous Operation of All Systems.

A.5.6.2.1(2) Simultaneous operation of a single cooking appliance, hood, or branch duct system, and the system protecting the entire common exhaust duct.

Scenario No. 1: System 1 protecting the entire common exhaust duct is separate from Systems A, B, C, D, and E. A fire is detected in System A. System A and System 1 are operated simultaneously. Shutdown of all appliances protected by systems A, B, C, D, and E is in accordance with 4.4.3. [*See Figure A.5.6.2.1(2)(a).*]

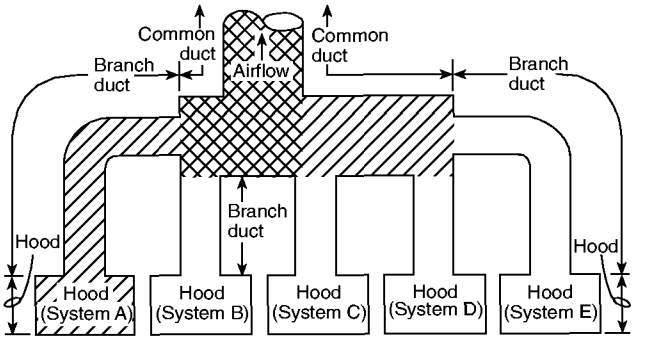

FIGURE A.5.6.2.1(2)(a) Simultaneous Operation of a Single Cooking Appliance, Hood, or Branch Duct System, and the System Protecting the Entire Common Exhaust Duct.

Scenario No. 2: System E also provides protection for the entire common exhaust duct. A fire is detected in System C. System C and System E operate simultaneously. Shutdown of all appliances protected by systems A, B, C, D, and E is in accordance with 4.4.3 [*See Figure A.5.6.2.1(2)(b).*].

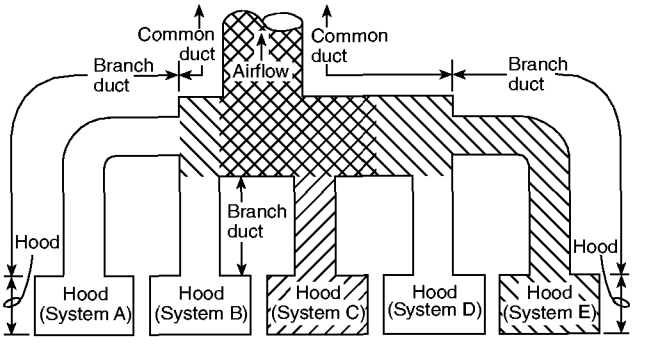

FIGURE A.5.6.2.1(2)(b) Simultaneous Operation of Two Systems in Which One Also Provides Common Duct Protection.

Scenario No. 3: System E also provides protection for the entire common exhaust duct. A fire detected in System E will result in the actuation of System E only. Shutdown of all appliances protected by systems A, B, C, D, and E is in accordance with 4.4.3. [*See Figure A.5.6.2.1(2)(c).*]

A.5.6.3 Examples of ignition sources include, but are not limited to, in-duct electrostatic precipitators, permanently installed lights, and in-line fans, but does not include external spark arresters, and terminal exhaust fans.

Copyright National Fire Protection Association
Provided by IHS under license with NFPA
No reproduction or networking permitted without license from IHS
Not for Resale

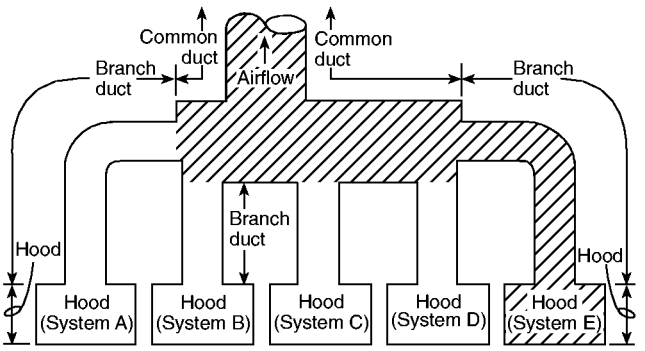

FIGURE A.5.6.2.1(2)(c) Independent Operation of a System that Protects a Hood and the Common Duct.

A.6.1 One of the first steps in the design and installation of a fire-extinguishing system should be to maintain complete and accurate records. Establishment of a job file will provide a means of documentation. A job file should contain all drawings, sketches, checklists, notes, maintenance agreements, and correspondence related to the installation from start to finish. Photographs are encouraged and should include a wide shot that shows the location of all appliances in the protected area at the time of installation. The photographs, as well as any checklists, drawings, or sketches, should be signed and dated.

A.6.2 It is recommended that system design and installation personnel be certified in accordance with the manufacturer's requirements. It is standard industry practice to provide expiration dates on training certificates.

A.6.4.3 When a discharge test is required, contact the particular system manufacturer for detailed functional discharge procedures. The use of substitute liquids, such as water, is not endorsed by all of the wet chemical extinguishing system manufacturers.

A.7.1.1 The characteristics of the system are dependent on the composition of the wet chemical solution and the type of expellant gas, as well as upon other factors; therefore, it is imperative to use the wet chemical provided by the manufacturer of the system and the type of expellant gas specified by the manufacturer of the system.

Systems are designed on the basis of the flow and extinguishing characteristics of a specific formulation of wet chemical.

Storage. Storage of wet chemical solution in containers other than those supplied by the manufacturer can result in agent contamination or deterioration and confusion regarding its identity.

A.7.1.4 Wet chemical solutions are relatively harmless and normally have no lasting significant effects on the skin, respiratory system, or clothing. They can produce mild, temporary irritation, but the symptoms usually will disappear when contact is eliminated. Irritation of the eyes should be treated by flushing with tap water for 15 minutes or longer. Any condition of prolonged irritation should be referred to a physician for treatment.

Disposal of wet chemical is best handled by flushing with water.

These systems are investigated to determine that they do not splash burning grease when installed in accordance with the manufacturer's listed installation and maintenance manual. It is known that potassium carbonate is moderately irritating to the skin and eyes and repeated skin contact can lead to dermatitis, but this is based on concentrations higher than those used in wet chemical extinguishing system units.

A.7.3.1 It is recommended that system maintenance personnel be certified with the manufacturer's requirements. It is standard industry practice to provide expiration dates on training certificates.

A.7.3.2 Regular service contracts with the equipment manufacturer or an authorized installation or maintenance company are recommended.

A.7.3.2.1(3) The following methods can be used to verify that piping is not obstructed:

(1) Disassembly of all piping
(2) Conducting a full or partial discharge test
(3) Utilizing other methods recommended by the manufacturer

A.7.3.2.2 The hydrostatic testing of wet chemical containers shall follow the applicable procedures outlined in Section 7.5.

A.7.3.2.3 A discharge of the wet chemical normally is not part of this test.

A.7.3.2.6 Under special circumstances or when local requirements are in effect, additional information can be desirable or required.

A.7.3.3 The date of manufacture marked on fusible metal alloy–sensing elements does not limit when they can be used. These devices have unlimited shelf life. The intent of Section 7.3.3 is to require replacement of fusible metal alloy–sensing elements that have been installed for up to 1 year in environments subjecting them to contaminant-loading, such as grease in restaurant hoods and ducts that could adversely affect their proper operation.

A.7.5 DOT- or TC-marked cylinders can be required to be subjected to more frequent testing.

A.7.5.2.3 DOT- or TC-marked containers installed in a system, not under the jurisdiction of DOT or TC, are not required to follow DOT or TC requirements as long as they remain in operation.

Annex B Informational References

B.1 Referenced Publications. The following documents or portions thereof are referenced within this standard for informational purposes only and are thus not part of the requirements of this document unless also listed in Chapter 2.

B.1.1 NFPA Publications. (Reserved)

B.1.2 Other Publications.

B.1.2.1 ASTM Publication. American Society for Testing and Materials, 100 Barr Harbor Drive, West Conshohocken, PA 19428-2959.

IEEE/ASTM SI 10, *Standard for Use of the International System of Units (SI): The Modern Metric System,* 1997.

B.2 Informational References. The following documents or portions thereof are listed here as informational resources only. They are not a part of the requirements of this document.

Copyright National Fire Protection Association
Provided by IHS under license with NFPA
No reproduction or networking permitted without license from IHS
Not for Resale

B.2.1 U.S. Government Publication. U.S. Government Printing Office, Washington, DC 20402.

Code of Federal Regulations, Title 49, Parts 170–190.

B.3 References for Extracts.

NFPA 10, *Standard for Portable Fire Extinguishers,* 2002 edition.

NFPA 17, *Standard for Dry Chemical Extinguishing Systems,* 2002 edition.

NFPA 25, *Standard for the Inspection, Testing, and Maintenance of Water-Based Fire Protection Systems,* 2002 edition.

NFPA 72®, National Fire Alarm Code®, 2002 edition.

NFPA 496, *Standard for Purged and Pressurized Enclosures for Electrical Equipment,* 1998 edition.

NFPA 820, *Standard for Fire Protection in Wastewater Treatment and Collection Facilities,* 1999 edition.

Copyright National Fire Protection Association
Provided by IHS under license with NFPA
No reproduction or networking permitted without license from IHS
Not for Resale

Index

© 2002 National Fire Protection Association. All Rights Reserved.

The copyright in this index is separate and distinct from the copyright in the document that it indexes. The licensing provisions set forth for the document are not applicable to this index. This index may not be reproduced in whole or in part by any means without the express written permission of NFPA.

-A-

Acceptance tests ..... 6.1.1(5), 6.4, A.6.4.3
Access
Inspection or maintenance 7.1.3
Manual activation 5.2.1.10
Actuation ..... *see* Operation
Alarms
Fire, connection to 5.2.1.9
System operation indicators 5.2.1.8
Trouble signals 5.3.1, 5.3.2
Application of standard 1.3
Approvals 6.3.5, 6.4, A.6.4.3
Approved (definition) 3.2.1, A.3.2.1
Authority having jurisdiction (definition) 3.2.2, A.3.2.2
Automatic operation ..... *see* Operation
Auxiliary equipment ..... 6.1.1(4), 6.3.4(3), 7.3.2.1(2)
Definition 3.3.1

-B-

Blowoff caps ..... 4.3.1.6, 7.2.2(7)
Branch ducts ..... *see* Ducts

-C-

Certification of installation 6.2, A.6.2
Chases, fire 7.1.3
Common ducts ..... *see* Ducts
Components of system ..... Chap. 4
Containers
Hydrostatic testing 7.3.2.2, 7.5, A.7.3.2.2, A.7.5
Inspections and maintenance ..... 7.3.2.1(2), 7.3.2.2, A.7.3.2.2
Location of 5.4, A.5.4
Storage 7.1.1, A.7.1.1

-D-

Definitions ..... Chap. 3
Detection devices ..... 4.2, 5.6.1.4, 5.6.1.6, 5.6.3, 6.3.4(1), A.5.6.3
Actuation 5.2.1.3
In ducts 5.6.1.5, 5.6.1.6.1, 5.6.2.1.2
Location 5.6.2.1.1
Maintenance ..... 7.3.2.1(2), 7.3.2.3, A.7.3.2.3
Remote manual control and 5.2.1.2
Supervision 5.3.1
Discharge nozzles ..... 4.3, 5.5, 6.3.3(2)
Caps ..... 4.3.1.5, 4.3.1.6, 7.2.2(7)
Definition 3.3.2
Identification markings 4.3.1.4, A.4.3.1.4
Maintenance ..... 7.3.2.1(2)
Ducts 5.6.1.5, 5.6.1.6.1, 7.1.3
Branch 5.6.1.3, 5.6.2.1.2
Definition 3.3.3.1
Common ..... 5.2.1.6, 5.6.1.1 to 5.6.1.3, 5.6.2, A.5.6.2
Definition 3.3.3.2

-E-

Electrical wiring and equipment ..... 4.7, 6.3.4(4)
Equipment to be protected, list of 5.1.2
Equivalency to standard 1.5
Expellant gas
Assemblies, location of 5.4, A.5.4
Containers ..... 7.3.2.1(2)
Definition 3.3.4
Inspection and maintenance 7.1.2, A.7.1.1
Shutoff devices operated by 4.4.3.6

-F-

Fire alarm system, connection to 5.2.1.9
Fittings 4.5, A.4.5.1
Fixed temperature-sensing elements 7.3.3, 7.3.4, A.7.3.3
Formulas 1.6, A.1.6.1.1
Fusible links 5.6.1.2, 5.6.1.6, 5.6.2.1.1, 7.3.3, A.7.3.3

-G-

Galvanized pipe and fittings 4.5.2

-H-

Hazards
List of 5.1.2
Multiple hazards, systems protecting 5.1.5
Specifications ..... 6.1.1(6)
Hose and hose assemblies ..... 4.5.4, 7.3.2.1(2), 7.5
Hydrostatic testing 7.3.2.2, 7.5, A.7.3.2.2, A.7.5

-I-

Indicators 4.8, 5.2.1.8
Definition 3.3.5
Inspections
Access 7.1.3
Definition 3.3.6, A.3.3.6
Expellant gas 7.1.2
Owner's inspection 7.2
Recharging 7.1.4, A.7.1.4

-L-

Liquid agent ..... *see* Wet chemical
Listed (definition) 3.2.3, A.3.2.3
Location, of system 5.4, A.5.4

-M-

Maintenance 7.1.1.2, 7.3, A.7.3
Access 7.1.3
Definition 3.3.8
Manual operation ..... *see* Operation
Manuals
Manufacturer's listed installation and maintenance manual ..... 5.1.3, 5.2.1.1, 5.2.1.3, 6.1.1(3), 6.4, 7.1.4, 7.2.1, 7.3.1, 7.4.2, A.7.1.4
Definition 3.3.9.1, A.3.3.9.1
Owner's manual 6.4.4, 7.2.1
Definition 3.3.9.2
Manufacturer's listed installation and maintenance manual ..... *see* Manuals
Markings, identification
Discharge nozzles 4.3.1.4, A.4.3.1.4
Fixed temperature-sensing elements 7.3.3.1
Maintenance, performance of ..... 7.2.2(4), 7.3.2.6, A.7.3.2.6
Measurement, units of 1.6, A.1.6.1.1
Movable cooking equipment, placement of 5.6.4

Copyright National Fire Protection Association
Provided by IHS under license with NFPA
No reproduction or networking permitted without license from IHS
Not for Resale

-N-

Nozzles, discharge ..... *See* Discharge nozzles

-O-

Operating devices ..... 4.4, 5.2.1.4, 5.2.1.7, 6.3.4(2); *See also* Operation; Shutoff devices
Definition 3.3.10, A.3.3.10
Operation 5.2, A.5.2.1.10
Automatic 5.2.1
Definition 3.3.11.1
Manual 4.4.2, 5.2.1, A.5.2.1.10
Definition 3.3.11.2
Inspection of actuators ..... 7.2.2(2)
Remote actuators 4.4.2.5, 5.2.1.2, 5.2.1.6
Trouble signals 5.3.1, 5.3.2
Owner's inspection 7.2
Owner's manual ..... *see* Manuals

-P-

Personnel
Qualifications 1.7, A.1.7
Trained 6.1, 6.2, 6.4, 7.3.1, A.6.2, A.7.3.1
Definition 3.3.17
Pipe ..... 4.5, 5.6.1.7, 6.3.3(1), A.4.5.1
Definition 3.3.12
Inspection and maintenance ..... 7.1.4(3), 7.3.2.1
Plans ..... 6.1.1(1), 6.3, 6.4.2, A.6.1
Pre-engineered systems
Definition 3.3.13, A.3.3.13
Pipe A.4.5.1
Purpose of standard 1.2

-Q-

Qualifications, personnel 1.7, A.1.7

-R-

Recharge 7.1.4, 7.4, A.7.1.4
Definition 3.3.14
Storage of supplies for 7.1.1, A.7.1.1
References ..... Chap. 2, Annex B
Retroactivity of standard 1.4
Review of system 6.2, A.6.2

-S-

Scope of standard 1.1, A.1.1
Shall (definition) 3.2.4
Should (definition) 3.2.5
Shutoff devices 4.4.3, 5.6.2.2
Definition 3.3.15
Signals ..... 5.2.1.8, 5.2.1.9, 7.3.2.1(2)
Definition 3.3.16
Trouble 5.3.1, 5.3.2
Simultaneous operation of system ..... 5.1.4, 5.1.5, 5.6.2.1, A.5.6.2.1, Fig. A.5.6.2.1(1), Figs. A.5.6.2.1(2)(a) to (c)
SI units 1.6, A.1.6.1.1
Special requirements 5.6, A.5.6
Specifications, system 6.1, A.6.1
Standard (definition) 3.2.6
Storage, recharging supplies 7.1.1, A.7.1.1
Strainers 4.3.1.1
Supervision of system 5.3
System requirements ..... Chap. 5
Actuation 5.2, A.5.2.1.10
Applications 5.1.3
Discharge nozzles 5.5
Location of system 5.4, A.5.4
Special requirements 5.6, A.5.6
Supervision 5.3
Use 5.1.2

-T-

Tests
Acceptance ..... 6.1.1(5), 6.4, A.6.4
Hydrostatic 7.3.2.2, 7.5, A.7.3.2.2, A.7.5
Trained ..... *See* Personnel, trained
Transport Canada (TC)
Containers 7.5.2.3, A.7.5
Definition 3.3.18
Tubing 4.5.4

-U-

Units of measurement 1.6, A.1.6.1.1
U.S. Department of Transportation (DOT)
Containers ..... 7.5.1 Ex. 2, 7.5.2.3, A.7.5
Definition 3.3.19

-W-

Wet agent ..... *see* Wet chemical
Wet chemical 4.6, A.4.6.1
Corrosivity of A.4.6.1
Definition 3.3.21, A.3.3.21
Extinguishing mechanisms A.4.6.1
Mixing types of 4.6.2
Storage 7.1.1, A.7.1.1
Wiring ..... 4.7, 6.3.4(4)

Copyright National Fire Protection Association
Provided by IHS under license with NFPA
No reproduction or networking permitted without license from IHS
Not for Resale