NFPA 17

Standard for Dry Chemical Extinguishing Systems

2002 Edition

NFPA, 1 Batterymarch Park, PO Box 9101, Quincy, MA 02269-9101
An International Codes and Standards Organization

NFPA License Agreement

This document is copyrighted by the National Fire Protection Association (NFPA), 1 Batterymarch Park, Quincy, MA 02269-9101 USA.
All rights reserved.

NFPA grants you a license as follows: The right to download an electronic file of this NFPA document for temporary storage on one computer for purposes of viewing and/or printing one copy of the NFPA document for individual use. Neither the electronic file nor the hard copy print may be reproduced in any way. In addition, the electronic file may not be distributed elsewhere over computer networks or otherwise. The hard copy print may only be used personally or distributed to other employees for their internal use within your organization.

--`,,,-`-`,,`,,`,`,,`---

Copyright National Fire Protection Association
Provided by IHS under license with NFPA
No reproduction or networking permitted without license from IHS

Not for Resale

Copyright ©
National Fire Protection Association, Inc.
One Batterymarch Park
Quincy, Massachusetts 02269

IMPORTANT NOTICE ABOUT THIS DOCUMENT

NFPA codes, standards, recommended practices, and guides, of which the document contained herein is one, are developed through a consensus standards development process approved by the American National Standards Institute. This process brings together volunteers representing varied viewpoints and interests to achieve consensus on fire and other safety issues. While the NFPA administers the process and establishes rules to promote fairness in the development of consensus, it does not independently test, evaluate, or verify the accuracy of any information or the soundness of any judgments contained in its codes and standards.

The NFPA disclaims liability for any personal injury, property or other damages of any nature whatsoever, whether special, indirect, consequential or compensatory, directly or indirectly resulting from the publication, use of, or reliance on this document. The NFPA also makes no guaranty or warranty as to the accuracy or completeness of any information published herein.

In issuing and making this document available, the NFPA is not undertaking to render professional or other services for or on behalf of any person or entity. Nor is the NFPA undertaking to perform any duty owed by any person or entity to someone else. Anyone using this document should rely on his or her own independent judgment or, as appropriate, seek the advice of a competent professional in determining the exercise of reasonable care in any given circumstances.

The NFPA has no power, nor does it undertake, to police or enforce compliance with the contents of this document. Nor does the NFPA list, certify, test or inspect products, designs, or installations for compliance with this document. Any certification or other statement of compliance with the requirements of this document shall not be attributable to the NFPA and is solely the responsibility of the certifier or maker of the statement.

NOTICES

All questions or other communications relating to this document and all requests for information on NFPA procedures governing its codes and standards development process, including information on the procedures for requesting Formal Interpretations, for proposing Tentative Interim Amendments, and for proposing revisions to NFPA documents during regular revision cycles, should be sent to NFPA headquarters, addressed to the attention of the Secretary, Standards Council, National Fire Protection Association, 1 Batterymarch Park, P.O. Box 9101, Quincy, MA 02269-9101.

Users of this document should be aware that this document may be amended from time to time through the issuance of Tentative Interim Amendments, and that an official NFPA document at any point in time consists of the current edition of the document together with any Tentative Interim Amendments then in effect. In order to determine whether this document is the current edition and whether it has been amended through the issuance of Tentative Interim Amendments, consult appropriate NFPA publications such as the *National Fire Codes*® Subscription Service, visit the NFPA website at www.nfpa.org, or contact the NFPA at the address listed above.

A statement, written or oral, that is not processed in accordance with Section 5 of the Regulations Governing Committee Projects shall not be considered the official position of NFPA or any of its Committees and shall not be considered to be, nor be relied upon as, a Formal Interpretation.

The NFPA does not take any position with respect to the validity of any patent rights asserted in connection with any items which are mentioned in or are the subject of this document, and the NFPA disclaims liability for the infringement of any patent resulting from the use of or reliance on this document. Users of this document are expressly advised that determination of the validity of any such patent rights, and the risk of infringement of such rights, is entirely their own responsibility.

Users of this document should consult applicable federal, state, and local laws and regulations. NFPA does not, by the publication of this document, intend to urge action that is not in compliance with applicable laws, and this document may not be construed as doing so.

Copyright National Fire Protection Association
Provided by IHS under license with NFPA
No reproduction or networking permitted without license from IHS
Not for Resale

Licensing Policy

This document is copyrighted by the National Fire Protection Association (NFPA). By making this document available for use and adoption by public authorities and others, the NFPA does not waive any rights in copyright to this document.

1. Adoption by Reference—Public authorities and others are urged to reference this document in laws, ordinances, regulations, administrative orders, or similar instruments. Any deletions, additions, and changes desired by the adopting authority must be noted separately. Those using this method are requested to notify the NFPA (Attention: Secretary, Standards Council) in writing of such use. The term "adoption by reference" means the citing of title and publishing information only.

2. Adoption by Transcription—A. Public authorities with lawmaking or rule-making powers only, upon written notice to the NFPA (Attention: Secretary, Standards Council), will be granted a royalty-free license to print and republish this document in whole or in part, with changes and additions, if any, noted separately, in laws, ordinances, regulations, administrative orders, or similar instruments having the force of law, provided that: (1) due notice of NFPA's copyright is contained in each law and in each copy thereof; and (2) that such printing and republication is limited to numbers sufficient to satisfy the jurisdiction's lawmaking or rule-making process. **B.** Once this NFPA Code or Standard has been adopted into law, all printings of this document by public authorities with lawmaking or rule-making powers or any other persons desiring to reproduce this document or its contents as adopted by the jurisdiction in whole or in part, in any form, upon written request to NFPA (Attention: Secretary, Standards Council), will be granted a nonexclusive license to print, republish, and vend this document in whole or in part, with changes and additions, if any, noted separately, provided that due notice of NFPA's copyright is contained in each copy. Such license shall be granted only upon agreement to pay NFPA a royalty. This royalty is required to provide funds for the research and development necessary to continue the work of NFPA and its volunteers in continually updating and revising NFPA standards. Under certain circumstances, public authorities with lawmaking or rule-making powers may apply for and may receive a special royalty where the public interest will be served thereby.

3. Scope of License Grant—The terms and conditions set forth above do not extend to the index of this document.

(For further explanation, see the Policy Concerning the Adoption, Printing, and Publication of NFPA Documents, which is available upon request from the NFPA.)

Copyright National Fire Protection Association
Provided by IHS under license with NFPA
No reproduction or networking permitted without license from IHS
Not for Resale

Copyright © 2002, National Fire Protection Association, All Rights Reserved

NFPA 17

Standard for

Dry Chemical Extinguishing Systems

2002 Edition

This edition of NFPA 17, *Standard for Dry Chemical Extinguishing Systems,* was prepared by the Technical Committee on Dry and Wet Chemical Extinguishing Systems and acted on by NFPA at its May Association Technical Meeting held May 19–23, 2002, in Minneapolis, MN. It was issued by the Standards Council on July 19, 2002, with an effective date of August 8, 2002, and supersedes all previous editions.

This edition of NFPA 17 was approved as an American National Standard on July 19, 2002.

Origin and Development of NFPA 17

The Dry Chemical Extinguishing Systems Committee was activated in 1952. At that time, there was no dry chemical extinguishing system tested and listed by a testing laboratory, but by late 1954, a system was tested and listed by Underwriters Laboratories Inc. At its meeting in January 1955, the Committee prepared an outline of a standard on dry chemical extinguishing systems and, in the following year, prepared the standard that was tentatively adopted by the National Fire Protection Association on June 7, 1956. Changes to the tentative standard led to approval of the first official NFPA standard on dry chemical extinguishing systems in 1957. Further amendments were made in 1958, 1968, 1969, 1972, 1973, 1975, and 1980. The 1985 edition was a complete revision of the standard. The 1990 edition was a partial revision.

The 1998 edition of this standard was revised to clarify the requirements for protection of unclosable openings and equipment shutdown.

Changes to the 2002 edition consist of an editorial restructuring of the standard in accordance with the NFPA *Manual of Style*, a specific reference for the listing of pre-engineered systems, and a simplification of the requirements for common ducts.

Copyright National Fire Protection Association
Provided by IHS under license with NFPA
No reproduction or networking permitted without license from IHS
Not for Resale

Technical Committee on Dry and Wet Chemical Extinguishing Systems

Edward J. Kaminski, *Chair*
Schirmer Engineering Corporation, NV [SE]

John H. Lawlor, *Secretary*
Keystone Fire Protection Company, PA [IM]
Rep. National Association of Fire Equipment Distributors

Paul E. Buchhofer, Building Inspection Underwriters, Inc., PA [E]
Samuel S. Dannaway, S. S. Dannaway Associates, Inc., HI [SE]
Jack K. Dick, Heiser Incorporated, NY [M]
Alan L. Hall, Loss Prevention Consultants, Inc., IL [SE]
Robert Kasiski, Factory Mutual Research Corporation, MA [I]
William Klingenmaier, Tyco Suppression Systems, WI [M]
George A. Krabbe, Automatic Fire Controls Inc., AZ [IM]
Rep. Fire Suppression Systems Association
Roland J. Land, Risk Control Consultants, LLC, NJ [SE]
Michael P. McGreal, Firedyne Engineering, PC, IL [SE]
J. R. Nerat, Badger Fire Protection/Williams Holdings, MI [M]
Rep. NFPA Industrial Fire Protection Section
James Shea, Kidde-Fenwal, Inc., MA [M]
Rep. Fire Equipment Manufacturers' Association
Richard A. Shiraishi, Kemper Insurance Companies, CA [I]
Craig Voelkert, Amerex Corporation, AL [M]
Kenneth W. Zastrow, Underwriters Laboratories Inc., IL [RT]

Alternates

Richard J. Biehl, Tyco Suppression Systems, WI [M]
(Alt. to W. Klingenmaier)
Richard L. Lupien, Kidde-Fenwal, Inc., MA [M]
(Alt. to J. Shea)
Norbert W. Makowka, National Association of Fire Equipment Distributors, IL [IM]
(Alt. to J. H. Lawlor)
James J. Urban, Underwriters Laboratories Inc., IL [RT]
(Alt. to K. W. Zastrow)
Charles F. Willms, Fire Suppression Systems Association, NC [M]
(Alt. to G. A. Krabbe)

Nonvoting

Walter M. Haessler, The Carlotta, CA
(Member Emeritus)
Edward D. Leedy, Naperville, IL
(Member Emeritus)

James D. Lake, NFPA Staff Liaison

Committee Scope: This Committee shall have primary responsibility for documents on the design, installation, operation, testing, maintenance, and use of dry and wet chemical extinguishing systems for fire protection.

This list represents the membership at the time the Committee was balloted on the text of this edition. Since that time, changes in the membership may have occurred. A key to classifications is found at the front of this book.

NOTE: Membership on a committee shall not in and of itself constitute an endorsement of the Association or any document developed by the committee on which the member serves.

Copyright National Fire Protection Association
Provided by IHS under license with NFPA
No reproduction or networking permitted without license from IHS
Not for Resale

Contents

Chapter 1 Administration **17–** 4
1.1 Scope **17–** 4
1.2 Purpose **17–** 4
1.3 Retroactivity **17–** 4
1.4 Equivalency **17–** 4
1.5 Units and Formulas **17–** 4
1.6 Qualifications **17–** 4

Chapter 2 Referenced Publications **17–** 4
2.1 General **17–** 4
2.2 NFPA Publications **17–** 4
2.3 Other Publications **17–** 4

Chapter 3 Definitions **17–** 4
3.1 General Definitions **17–** 4
3.2 NFPA Official Definitions **17–** 5
3.3 General Definitions **17–** 5
3.4 Systems Definitions **17–** 6

Chapter 4 Components **17–** 6
4.1 Detectors **17–** 6
4.2 Hand Hose Line and Nozzle Assembly **17–** 6
4.3 Nozzles **17–** 6
4.4 Operating Devices **17–** 6
4.5 Pipe and Fittings **17–** 6
4.6 Dry Chemical **17–** 7
4.7 Expellant Gas **17–** 7
4.8 Electrical Wiring and Equipment **17–** 7
4.9 Storage Containers **17–** 7
4.10 Indicators **17–** 7

Chapter 5 System Requirements **17–** 7
5.1 Use and Limitations **17–** 7
5.2 Multiple Systems Protecting a Common Hazard **17–** 7
5.3 Systems Protecting Two or More Hazards **17–** 8
5.4 Dry Chemical Requirements and Distribution **17–** 8
5.5 Special Considerations **17–** 8
5.6 Personnel Safety **17–** 8
5.7 Operation and Control of Systems **17–** 8
5.8 Dry Chemical and Expellant Gas Supply **17–** 9
5.9 Piping **17–** 9

Chapter 6 Total Flooding Systems **17–**10
6.1 General **17–**10
6.2 Hazard Specifications **17–**10

Chapter 7 Local Application Systems **17–**10
7.1 Uses **17–**10
7.2 Hazard Specifications **17–**10

Chapter 8 Hand Hose Line Systems **17–**11
8.1 Separate Supplies **17–**11
8.2 Location, Spacing, and Actuation **17–**11
8.3 Dry Chemical Requirements **17–**11
8.4 Training **17–**11

Chapter 9 Pre-Engineered Systems **17–**11
9.1 Uses **17–**11
9.2 Types of Systems **17–**11
9.3 Restaurant Hood, Duct, and Cooking Appliance Systems **17–**11
9.4 Manual Activation Requirements **17–**12
9.5 System Annunciation Requirements **17–**12
9.6 System Supervision **17–**12
9.7 Review and Certification **17–**12
9.8 Vehicle Fueling Service Station Systems **17–**12
9.9 Systems for the Protection of Mobile Equipment **17–**13
9.10 Hand Hose Line Systems **17–**13

Chapter 10 Plans and Acceptance Tests **17–**13
10.1 Specifications **17–**13
10.2 Plans **17–**14
10.3 Approval of Plans **17–**14
10.4 Approval of Installations **17–**14
10.5 Manual **17–**14

Chapter 11 Inspection, Maintenance, and Recharging **17–**14
11.1 General Requirements **17–**14
11.2 Owner's Inspection **17–**15
11.3 Maintenance **17–**15
11.4 Recharging **17–**15
11.5 Hydrostatic Testing **17–**15

Annex A Explanatory Material **17–**16

Annex B Informational References **17–**20

Index **17–**21

Copyright National Fire Protection Association
Provided by IHS under license with NFPA
No reproduction or networking permitted without license from IHS
Not for Resale

NFPA 17

Standard for

Dry Chemical Extinguishing Systems

2002 Edition

NOTICE: An asterisk (*) following the number or letter designating a paragraph indicates that explanatory material on the paragraph can be found in Annex A.

Changes other than editorial are indicated by a vertical rule beside the paragraph, table, or figure in which the change occurred. These rules are included as an aid to the user in identifying changes from the previous edition. Where one or more complete paragraphs have been deleted, the deletion is indicated by a bullet between the paragraphs that remain.

A reference in brackets [ ] following a section or paragraph indicates material that has been extracted from another NFPA document. As an aid to the user, Annex B lists the complete title and edition of the source documents for both mandatory and nonmandatory extracts. Editorial changes to extracted material consist of revising references to an appropriate division in this document or the inclusion of the document number with the division number when the reference is to the original document. Requests for interpretations or revisions of extracted text shall be sent to the appropriate technical committee.

Information on referenced publications can be found in Chapter 2 and Annex B.

Chapter 1 Administration

1.1* Scope. This standard includes minimum requirements for dry chemical fire-extinguishing systems that discharge dry chemical from fixed nozzles or hand hose lines by means of expellant gas.

1.2 Purpose. This standard is prepared for the use and guidance of those charged with the purchasing, designing, installing, testing, inspecting, approving, listing, operating, or maintaining of dry chemical fire-extinguishing systems in order that such equipment will function as intended throughout its life.

1.3 Retroactivity.

1.3.1 The provisions of this document are considered necessary to provide a reasonable level of protection from loss of life and property from fire. They reflect situations and the state of the art at the time the standard was issued.

1.3.2 Unless otherwise noted, it is not intended that the provisions of this document be applied to facilities, equipment, structures, or installations that were existing or approved for construction or installation prior to the effective date of this document.

1.4 Equivalency. Nothing in this standard is intended to prevent the use of new methods or devices, provided sufficient technical data are submitted to the authority having jurisdiction to demonstrate that the new method or devices are equivalent in quality, effectiveness, durability, and safety to those prescribed by this standard.

1.5 Units and Formulas.

1.5.1 When a primary value for measurement in English units as given in this standard is followed by a parenthetical equivalent value in metric units, the primary English value stated is to be regarded as the requirement.

1.5.1.1* Metric units of measurement in this standard are in accordance with the modernized metric system known as the International System of Units (SI).

1.5.1.2 The conversion procedure used for the SI units is to multiply the primary English quantity by the conversion factor and then round the result (if necessary) to the appropriate number of significant digits.

1.6* Qualifications. Only persons properly trained shall be considered competent to design, install, and service dry chemical systems.

Chapter 2 Referenced Publications

2.1 General. The documents or portions thereof listed in this chapter are referenced within this standard and shall be considered part of the requirements of this document.

2.2 NFPA Publications. National Fire Protection Association, 1 Batterymarch Park, P.O. Box 9101, Quincy, MA 02269-9101.

NFPA 70, *National Electrical Code®*, 2002 edition.
NFPA 72®, *National Fire Alarm Code®*, 2002 edition.

2.3 Other Publications.

2.3.1 ANSI Publication. American National Standards Institute, Inc., 11 West 42nd Street, 13th Floor, New York, NY 10036.

ANSI C-2, *National Electrical Safety Code*, 1993.

2.3.2 ASME Publications. American Society of Mechanical Engineers, Three Park Avenue, New York, NY 10016-5990.

ASME *Boiler and Pressure Vessel Code,* 1998.

ANSI/ASME B31.1, *Power Piping*, 1998 edition (including B31.1a 1999 Addenda and B31.1b 2000 Addenda).

2.3.3 ASTM Publication. American Society for Testing and Materials, 100 Barr Harbor Drive, West Conshohocken, PA 19428–2959.

ASTM A 53, *Standard Specifications for Pipe, Steel, Black and Hot-Dipped, Zinc-Coated, Welded and Seamless,* 2002.

2.3.4 UL Publications. Underwriters Laboratories Inc., 333 Pfingsten Road, Northbrook, IL 60062.

UL 300, *Fire Extinguishing Systems for Protection of Restaurant Cooking Areas, Fire Testing of*, 1996.

UL 1254, *Pre-Engineered Dry Chemical Extinguishing System Units*, 1996.

2.3.5 U. S. Government Publication. U.S. Government Printing Office, Washington, DC 20402.

Title 29, *Code of Federal Regulations,* Part 1910, Subpart S.

Chapter 3 Definitions

3.1 General Definitions. The definitions contained in this chapter shall apply to the terms used in this standard. Where terms are not included, common usage of the terms shall apply.

Copyright National Fire Protection Association
Provided by IHS under license with NFPA
No reproduction or networking permitted without license from IHS
Not for Resale

3.2 NFPA Official Definitions.

3.2.1* Approved. Acceptable to the authority having jurisdiction.

3.2.2* Authority Having Jurisdiction (AHJ). The organization, office, or individual responsible for approving equipment, materials, an installation, or a procedure.

3.2.3 Labeled. Equipment or materials to which has been attached a label, symbol, or other identifying mark of an organization that is acceptable to the authority having jurisdiction and concerned with product evaluation, that maintains periodic inspection of production of labeled equipment or materials, and by whose labeling the manufacturer indicates compliance with appropriate standards or performance in a specified manner.

3.2.4* Listed. Equipment, materials, or services included in a list published by an organization that is acceptable to the authority having jurisdiction and concerned with evaluation of products or services, that maintains periodic inspection of production of listed equipment or materials or periodic evaluation of services, and whose listing states that either the equipment, material, or service meets appropriate designated standards or has been tested and found suitable for a specified purpose.

3.2.5 Shall. Indicates a mandatory requirement.

3.2.6 Should. Indicates a recommendation or that which is advised but not required.

3.2.7 Standard. A document, the main text of which contains only mandatory provisions using the word "shall" to indicate requirements and which is in a form generally suitable for mandatory reference by another standard or code or for adoption into law. Nonmandatory provisions shall be located in an appendix or annex, footnote, or fine-print note and are not to be considered a part of the requirements of a standard.

3.3 General Definitions.

3.3.1 Auxiliary Equipment. Listed equipment used in conjunction with the dry chemical systems, for example, to shut down power, fuel, or ventilation to the hazard being protected or to initiate signaling devices.

3.3.2 Caking. A phenomenon that occurs when moisture chemically reacts with a dry chemical fire-extinguishing agent. This reaction results in materials that, being hydrated by moisture, stick together to form a large agglomerate, or what is more commonly referred to as lumps.

3.3.3* Calculation and Design. The process of computing, with the use of equations, graphs, or tables, the system characteristics such as flow rate, pipe size, area, or volume protected by each nozzle, nozzle pressure, and pressure drop.

3.3.4 Clearance. The air distance between extinguishing system equipment, including piping and nozzles, and unenclosed or uninsulated live electrical components not at ground potential. [**2001:**1.3]

3.3.5 Discharge Nozzle. Device from which the dry chemical is discharged to provide for suppression of a fire in the designated hazard.

3.3.6 Duct.

3.3.6.1 Branch Duct. The duct work that contains the exhaust air from a single hood or hazard area.

3.3.6.2 Common Duct. The duct work containing the exhaust air from two or more branch ducts.

3.3.7 Dry Chemical. A powder composed of very small particles, usually sodium bicarbonate-, potassium bicarbonate-, or ammonium phosphate-based with added particulate material supplemented by special treatment to provide resistance to packing, resistance to moisture absorption (caking), and the proper flow capabilities.

3.3.7.1 Multipurpose Dry Chemical. Ammonium phosphate-based extinguishing agent that is effective on fires involving both ordinary combustibles, such as wood or paper, and fires involving flammable liquids.

3.3.8 Expellant Gas. The medium used to discharge dry chemical from its container.

3.3.9 Indicator. A mechanical or electrical device that shows when an extinguishing system or a critical component of it is ready to operate, or if it has already operated.

3.3.10 Inspection. A visual examination of a system or portion thereof to verify that it appears to be in operating condition and is free of physical damage. [**820:**1.5]

3.3.11 Lumps. Agglomerations of dry chemical that do not crumble into particles when dropped from a height of 4 in. (101 mm) onto a hard surface.

3.3.12 Maintenance. Work, including, but not limited to, repair, replacement, and service, performed to ensure that equipment operates properly.

3.3.13 Manual.

3.3.13.1* Manufacturer's Listed Installation and Maintenance Manual. The pamphlet referenced as part of the listing of the dry chemical extinguishing system.

3.3.13.2 Owner's Manual. A pamphlet containing the manufacturer's recommendations for the proper inspection and operation of the extinguishing system.

3.3.14 Operating Devices. Mechanical, electrical, or pneumatic devices involved in the operation of a system whether "actuating devices" initiating operation (e.g., automatic detection devices or systems and manual actuation devices, such as manual pulls or strike buttons) or "operated devices" responding to the actuation (e.g., release mechanisms, shutoff devices, alarms, and auxiliary equipment).

3.3.15 Operation.

3.3.15.1 Automatic Operation. Operation without human intervention. This operation includes, but is not limited to, heat, rate of heat rise, smoke, or pressure change. [**25:**3.3]

3.3.15.2 Manual Operation. Operation of a system or its components through human action. [**25:**3.3]

3.3.16 Pipe. Circular conduit for conveying the dry chemical to the discharge nozzle(s). Wherever pipe is used in this standard, it shall be understood also to mean tube.

3.3.17 Recharge. The replacement of the dry chemical and expellant gas.

3.3.18 Selector Valve. A device used to direct dry chemical to the hazard being protected.

3.3.19 Signal. A status indication communicated by electrical or other means. [**72:**3.3]

Copyright National Fire Protection Association
Provided by IHS under license with NFPA
No reproduction or networking permitted without license from IHS
Not for Resale

3.3.20 Trained. One who has undergone the instructions necessary to safely design and install and reliably perform the maintenance and recharge service.

3.3.21 Transport Canada (TC). Has jurisdiction over design and transportation of compressed gas cylinders and cartridges.

3.3.22 U. S. Department of Transportation (DOT). The department that has jurisdiction over the design and transportation of compressed gas cylinders and cartridges.

3.4 Systems Definitions.

3.4.1 Dry Chemical System. A means of applying dry chemical that can be automatically or manually activated to discharge through a distribution system onto or into the protected hazard. The system includes auxiliary equipment.

3.4.2 Engineered System. Those requiring individual calculation and design to determine the flow rates, nozzle pressures, pipe size, area or volume protected by each nozzle, quantities of dry chemical, number and types of nozzles, and their placement in a specific system.

3.4.3 Hand Hose Line System. A hose and nozzle assembly connected by fixed piping or connected directly to a supply of extinguishing agent. [**122:**1.4]

3.4.4 Local Application System. A supply of dry chemical permanently connected to fixed piping with nozzles arranged to discharge directly onto the fire.

3.4.5* Pre-Engineered Systems. Those having predetermined flow rates, nozzle pressures, and quantities of dry chemical.

3.4.6 Total Flooding System. A supply of dry chemical permanently connected to fixed piping and nozzles that are arranged to discharge dry chemical into an enclosure surrounding the hazard.

Chapter 4 Components

4.1 Detectors. Automatic detectors shall be listed devices that are capable of detecting and indicating heat, flame, smoke, combustible vapors, or an abnormal condition in the hazard that is likely to produce fire.

4.2 Hand Hose Line and Nozzle Assembly.

4.2.1* Hose. Hose lines on systems shall be coupled to the dry chemical supply and shall incorporate hose listed for this use.

4.2.2 Hose Nozzle. A hose nozzle shall be so designed that it can be handled by one person.

4.2.2.1 A hose nozzle shall incorporate a shutoff device to control the flow of dry chemical.

4.2.3 Hose Line Storage. The hose shall be coiled on a hose reel or rack so that it can be readily uncoiled with a minimum of delay.

4.2.3.1 If installed, hose line stored outdoors shall be protected against the weather.

4.3 Nozzles.

4.3.1 Discharge Nozzles. Discharge nozzles shall be listed for their intended use.

4.3.1.1 Discharge nozzles shall be of adequate strength for use with the expected working pressures.

4.3.1.2 Discharge nozzles shall be of brass, stainless steel, or other corrosion-resistant materials, or be protected inside and out against corrosion.

4.3.1.3 Discharge nozzles shall be made of noncombustible materials and shall withstand the expected fire exposure without deformation.

4.3.1.4 Discharge nozzles shall be permanently marked for identification.

4.3.1.5 Discharge nozzles shall be provided with blowoff caps or other suitable devices or materials to prevent the entrance of moisture or other environmental materials into the piping.

4.3.1.6 The protective device shall blow off, open, or blow out upon agent discharge.

4.4 Operating Devices.

4.4.1 Operating devices shall be listed.

4.4.1.1 All operating devices shall be designed for the service they will encounter and shall not be readily rendered inoperative or susceptible to accidental operation.

4.4.1.2 Operating devices shall be marked to indicate their listed minimum and maximum temperature limitations, but all devices shall operate at least from 32°F to 120°F (0°C to 49°C).

4.4.2 Manual Actuators.

4.4.2.1 Manual actuators shall not require a force of more than 40 lb (178 N).

4.4.2.2 Manual actuators shall not require movement of more than 14 in. (356 mm) to secure operation.

4.4.2.3 All manual actuators shall be provided with operating instructions.

4.4.2.3.1 The operating instructions shall be permitted to include the use of pictographs and shall have lettering at least ¼ in. (6.35 mm) in height. *(See 5.7.1.7.)*

4.4.2.4 All remote manual operating devices shall be identified as to the hazard they protect.

4.4.3 Shutoff Devices. Shutoff devices shall require manual resetting prior to fuel or power being restored.

4.4.4 Valves.

4.4.4.1 All valves shall be listed for the intended use, particularly with regard to flow capacity and operation.

4.4.4.2 Selector valves shall be of the quick-opening type.

4.4.4.3 Selector valves shall allow free passage of the dry chemical.

4.5 Pipe and Fittings.

4.5.1* General. Pipe and fittings shall be of noncombustible material having physical and chemical characteristics such that their integrity under stress can be predicted with reliability. The pipe, fittings, and connection joints shall withstand the maximum expected pressure in the piping system.

4.5.1.1 Pipe and fittings shall be galvanized steel, stainless steel, copper, or brass. Special corrosion-resistant materials or coatings shall be required in severely corrosive atmospheres.

--`,,`-`-`,,`,,`,`,,`---
Copyright National Fire Protection Association
Provided by IHS under license with NFPA
No reproduction or networking permitted without license from IHS
Not for Resale

Black steel pipe and fittings shall be permitted in noncorrosive atmospheres.

4.5.1.2 For pre-engineered systems, pipe, tubing, and fitting materials shall be in accordance with manufacturer's listed installation and maintenance manual.

4.5.1.3* For all other systems, the thickness of the piping shall be calculated in accordance with the ANSI/ASME B31.1, *Power Piping*, 1998 edition (including B31.1a 1999 Addenda, and B31.1b 2000 Addenda).

4.5.1.3.1 The internal pressure used for the calculation in 4.5.1.3 shall not be less than the greater of either of the following values:

(1) The normal charging pressure in the agent container at 70°F (21°C)
(2) 80 percent of the maximum pressure in the agent container at a maximum storage temperature of not less than 130°F (54°C)

4.5.1.3.2 If higher storage temperatures are approved for a given system, the internal pressure used for the calculation shall be adjusted to the maximum pressure in the container at the higher temperature, using ANSI/ASME B31.1 *Power Piping*, specified in 4.5.1.3.

4.5.2 Cast iron pipe and fittings, steel pipe conforming to ASTM A 53, *Standard Specifications for Pipe, Steel, Black and Hot-Dipped, Zinc-Coated, Welded and Seamless*, aluminum pipe, or nonmetallic pipe, shall not be used.

4.5.3* Flexible piping (hose) shall be used only if specified in the manufacturer's listed installation and maintenance manual.

4.5.4 Other types of pipe and fittings that have been investigated and listed for this service shall be permitted to be used. The use of such pipe and fittings shall involve careful consideration of the following factors:

(1) Pressure rating
(2) Corrosion (chemical and electrolytic)
(3) Methods of joining
(4) Resistance to fire exposure and rapid temperature changes
(5) Flow characteristics

4.6 Dry Chemical.

4.6.1* The type of dry chemical used in the system shall not be changed unless proven to be changeable by a testing laboratory, recommended by the manufacturer of the equipment, and approved by the authority having jurisdiction.

4.6.2 Systems shall be designed on the basis of the flow and extinguishing characteristics of a specific make and type of dry chemical.

4.6.3* Types of dry chemical shall not be mixed.

4.7 Expellant Gas.

4.7.1 Carbon dioxide used in expellant gas cartridges shall meet the following specifications:

(1) The vapor phase shall not be less than 99.5 percent carbon dioxide.
(2) The water content of the liquid phase shall not be more than 0.01 percent by weight [–30°F (–34.4°C) dew point].
(3) The oil content shall not be more than 10 ppm by weight.

4.7.2 Nitrogen used as an expellant gas shall be standard industrial grade with a dew point of –60°F (–52.2°C) or lower.

4.8 Electrical Wiring and Equipment. Electrical wiring and equipment shall be installed in accordance with NFPA 70, *National Electrical Code®*.

4.9 Storage Containers.

4.9.1 The dry chemical containers used in these systems shall be designed to meet the requirements of the U.S. Department of Transportation (DOT) or Transport Canada (TC) if used as shipping containers under pressure.

4.9.2* If not shipping containers under pressure, the dry chemical containers shall be designed, fabricated, inspected, certified, and stamped in accordance with the ASME *Boiler and Pressure Vessel Code*, "Rules for Construction of Pressure Vehicles."

4.9.3 The design pressure shall be suitable for the maximum pressure developed at 130°F (55°C) or at the maximum controlled temperature limit.

4.10 Indicators. Dry chemical systems shall be provided with an indicator to show that the system is in a ready condition or is in need of recharging.

Chapter 5 System Requirements

5.1 Use and Limitations.

5.1.1* Use. The types of hazards and equipment that can be protected using dry chemical extinguishing systems include the following:

(1)*Flammable or combustible liquids
(2)*Flammable or combustible gases
(3) Combustible solids including plastics, which melt when involved in fire
(4) Electrical hazards such as oil-filled transformers or circuit breakers
(5) Textile operations subject to flash surface fires
(6) Ordinary combustibles such as wood, paper, or cloth
(7) Restaurant and commercial hoods, ducts, and associated cooking appliance hazards such as deep-fat fryers

5.1.2 Limitations. Dry chemical extinguishing systems shall not be considered satisfactory protection for the following:

(1) Chemicals containing their own oxygen supply, such as cellulose nitrate
(2) Combustible metals such as sodium, potassium, magnesium, titanium, and zirconium
(3) Deep-seated or burrowing fires in ordinary combustibles where the dry chemical cannot reach the point of combustion

5.1.2.1* Multipurpose dry chemical shall not be used on machinery such as carding equipment in textile operations and delicate electrical equipment.

5.1.2.2 Before dry chemical extinguishing equipment is considered for use in protecting electronic equipment or delicate electrical relays, the effect of residual deposits of dry chemical on the performance on electronic equipment shall be evaluated.

5.2 Multiple Systems Protecting a Common Hazard.

5.2.1 Where two or more systems are used to protect a common hazard, they shall be arranged for simultaneous opera-

--`,,`-`-`,,`,,`,`,,`---
Copyright National Fire Protection Association
Provided by IHS under license with NFPA
No reproduction or networking permitted without license from IHS
Not for Resale

tion. Operation of a single actuator shall cause all systems to operate.

5.2.2 Pre-engineered systems shall be designed in accordance with Chapter 9.

5.3 Systems Protecting Two or More Hazards.

5.3.1 Where two or more hazards could be simultaneously involved in fire by reason of their proximity, the hazards shall be protected by either of the following:

(1) Individual systems installed to operate simultaneously
(2) A single system designed to protect all hazards that could be simultaneously involved

5.3.2 Any hazard that will allow fire propagation from one area to another shall constitute a single fire hazard.

5.4 Dry Chemical Requirements and Distribution.

5.4.1 General.

5.4.1.1* The following factors shall be considered in determining the amount of dry chemical required:

(1) Minimum quantity of dry chemical
(2) Minimum flow rate of dry chemical
(3) Nozzle placement limitations including spacing, distribution, and obstructions
(4) High ventilation rates, if applicable
(5) Prevailing wind conditions, if applicable

5.4.1.2* The amount of dry chemical required for pre-engineered systems and hand hose line systems shall be determined in accordance with Chapter 7.

5.4.2 Compensation for Special Conditions. Additional quantities of dry chemical and additional nozzles, if necessary, shall be provided to compensate for special condition(s) such as high ventilation rates or prevailing wind conditions that could adversely affect the extinguishing effectiveness of the system.

5.5 Special Considerations.

5.5.1* Where systems protect hazards that are normally heated, the power or fuel supply to heaters shall be shut off automatically upon actuation of the extinguishing systems.

5.5.2 Where systems protect hazards that have flowing flammable or combustible fluids or gases, the system shall be provided with automatic means to ensure shutoff of power and fuel valves upon operation of the extinguishing systems.

5.5.3 Where systems protect hazards that have conveyors moving flammable or combustible materials or commodities, the conveyors shall be automatically shut off upon operation of the extinguishing systems.

5.5.4 All shutoff systems shall be fail-safe.

5.5.5 All shutoff systems shall require manual resetting prior to restoration of the operating conditions existing before operation of the extinguishing systems.

5.5.6 All shutoff devices shall function with the system operation.

5.5.6.1 Expellant gas that is used to pneumatically operate shutoff devices shall be taken prior to its entry into the dry chemical tank.

5.6* Personnel Safety.

5.6.1 Safety Requirements.

5.6.1.1* Where total flooding and local application systems are used and there is a possibility that personnel could be exposed to a dry chemical discharge, suitable safeguards shall be provided to ensure prompt evacuation of such locations.

5.6.1.2 Safety procedures shall provide a means for prompt rescue of any trapped personnel.

5.6.1.3 Safety items to be considered shall include, but not be limited to, the following:

(1) Personnel training
(2) Warning signs
(3) Predischarge alarms
(4) Discharge alarms
(5) Respiratory protection

5.6.2 Electrical Clearances.

5.6.2.1 All system components shall be located to maintain no less than minimum clearances from live electrical parts.

5.6.2.2 The following references shall be considered as the minimum electrical clearance requirements for the installation of dry chemical systems:

(1) ANSI C-2, *National Electrical Safety Code*
(2) NFPA 70, *National Electrical Code*
(3) 29 CFR 1910 S

5.6.2.3 Where the design basic insulation level (BIL) is not available and where nominal voltage is used for the design criteria, the highest minimum clearance specified for this group shall be used.

5.7* Operation and Control of Systems.

5.7.1 Methods of Actuation.

5.7.1.1 Systems shall be provided with both automatic and manual means of operation.

5.7.1.2 The automatic and manual means of mechanical system actuation, external to the control head or releasing device, shall be separate and independent of each other so that failure of one will not impair the operation of the other.

5.7.1.3 Hand hose line systems shall not require automatic means of operation.

5.7.1.4 Operation of any automatic or manual actuator shall be all that is required to bring about the full operation of the system.

5.7.1.5 At least one manual actuator shall be provided for each system.

5.7.1.6 All operating devices shall be designed, located, installed, or protected so that they are not subject to mechanical, environmental, or other conditions that could render them inoperative or cause inadvertent operation of the system.

5.7.1.7* A readily accessible means for manual activation shall be located in a path of exit or egress.

5.7.1.7.1 When manual activation is used for protection of hazards other than mobile equipment, the manual activation device shall be installed no more than 48 in. (1200 mm), nor less than 42 in. (1067 mm) above the floor and shall clearly identify the hazard protected.

Copyright National Fire Protection Association
Provided by IHS under license with NFPA
No reproduction or networking permitted without license from IHS
Not for Resale

5.7.1.8 Automatic systems protecting common exhaust ducts only shall not require a remote manual actuator.

5.7.1.9 All remote manual actuators shall be identified as to the hazard they protect.

5.7.1.10 When a listed releasing mechanism is used employing a single line for mechanical detection and remote manual control, the remote manual control shall be installed inline, prior to all detection devices, so that malfunction of one does not impede operation of the other.

5.7.1.11 Automatic detection and system actuation shall be in accordance with the manufacturer's listed installation and maintenance manual.

5.7.2 Supervision.

5.7.2.1 Supervision of electrically or pneumatically operated automatic systems shall be provided unless specifically waived by the authority having jurisdiction.

5.7.2.2 Pneumatic actuation piping, hose, and tubing that is not normally pressurized shall not require supervision.

5.7.3* Notification. An audible or visual indicator shall be provided to show that the system has operated, that personnel response might be needed, and that the system is in need of recharge.

5.7.4 Connection to the Alarm System. The extinguishing system shall be connected to the fire alarm system, if provided, in accordance with the requirements of *NFPA 72®*, *National Fire Alarm Code®*, so that the actuation of the dry chemical system will sound the fire alarm as well as provide the function of the extinguishing system.

5.8 Dry Chemical and Expellant Gas Supply.

5.8.1 Quantity. The amount of dry chemical in the system shall be at least sufficient for the largest single hazard protected, or for the group of hazards that is to be protected simultaneously.

5.8.2* Reserve Supply.

5.8.2.1 Where a dry chemical system protects multiple hazards by means of selector valves, sufficient dry chemical and expellant gas shall be kept on hand for one complete recharge of the system.

5.8.2.2 For single hazard systems, a similar supply shall be kept on hand if the importance of the hazard is such that it cannot be shut down until recharges can be procured.

5.8.3 Container. The dry chemical container and expellant gas assemblies shall be located near the hazard or hazards protected, but not where they will be exposed to a fire or explosion in these hazards.

5.8.3.1 The dry chemical container and expellant gas assemblies shall be located so as not to be subjected to severe weather conditions or to mechanical, chemical, or other damage.

5.8.3.2 Where excessive climatic or mechanical exposures are expected, suitable enclosures or guards shall be provided.

5.8.3.3* The dry chemical container and expellant gas assemblies utilizing nitrogen shall be located where the ambient temperature is normally –40°F to 120°F (–40°C to 48.9°C).

5.8.3.4 Assemblies utilizing carbon dioxide shall be located where the ambient temperature is normally 32°F to 120°F (0°C to 48.9°C).

5.8.3.5 If temperatures are outside the limits specified in 5.8.3.3 and 5.8.3.4, the equipment shall be listed for such temperatures, or means shall be provided for maintaining the temperatures within the ambient ranges given.

5.8.3.6 The dry chemical container and expellant gas assemblies shall be located where they will be accessible for inspection, maintenance, and service.

5.9 Piping.

5.9.1* Arrangement and Installation of Pipe and Fittings.

5.9.1.1 Piping and fittings shall be installed in accordance with good commercial practices.

5.9.1.2 All piping shall be laid out to produce the desired dry chemical flow rate at the nozzles.

5.9.1.3 All piping shall be installed to avoid possible restrictions due to foreign matter, faulty fabrication, or improper installation.

5.9.1.4 The piping system shall be securely supported and shall not be subject to mechanical, chemical, or other damage.

5.9.1.5 Where explosions are possible, the piping system shall be hung from supports that are least likely to be displaced.

5.9.1.6 Pipe shall be reamed and cleaned before assembly, and, after assembly, the entire piping system shall be blown out with dry gas before nozzles or discharge devices are installed.

5.9.1.7 Pipe thread compound or tape shall not be used.

5.9.1.8 Pipe thread tape shall be permitted where installed in accordance with the manufacturer's listed installation manual.

5.9.1.9 Where the pipe or conduit penetrates a duct or hood, the penetration shall have a liquidtight continuous external weld or be sealed by a listed device.

5.9.2 Pipe Size and Nozzle Determination.

5.9.2.1 Pipe sizes and nozzles shall be selected, on the basis of calculations, to deliver the required dry chemical flow rate at each nozzle.

5.9.2.2 For pre-engineered systems, pipe sizes and nozzles shall be selected in accordance with the manufacturer's listed installation and maintenance manual.

5.9.2.3 Equations, or graphs derived therefrom, shall be used to determine the pressure drop in the pipeline in engineered systems.

5.9.2.3.1 The design information of 5.9.2.3 shall be based on tests performed by the manufacturer and shall be confirmed by a testing laboratory; it is not required in pre-engineered systems.

5.9.2.4 All discharge nozzles shall be designed and subsequently located, installed, and protected so that they are not subject to mechanical, environmental, or other conditions that could render them inoperative.

5.9.2.5 Discharge nozzles shall be connected and supported so that they will not be readily put out of alignment.

5.9.2.6 Where nozzles are connected directly to flexible hose, they shall be provided with mounting brackets or fixtures to ensure that they can be aligned properly and that the alignment will be maintained.

Copyright National Fire Protection Association
Provided by IHS under license with NFPA
No reproduction or networking permitted without license from IHS
Not for Resale

Chapter 6 Total Flooding Systems

6.1* General.

6.1.1 A total flooding type of system shall be used only where there is a permanent enclosure surrounding the hazard that adequately enables the required concentration to be built up.

6.1.2 The total area of unclosable openings shall not exceed 15 percent of the total area of the sides, top, and bottom of the enclosure.

6.1.3 Where unclosable openings exceed 15 percent of the total enclosure surface area, a local application system shall be used to protect the entire hazard.

6.1.4 Pre-engineered total flooding systems shall be permitted to protect permanent enclosures having unclosable openings greater than 15 percent, only when listed for such use.

6.1.5 Deep-seated fires involving solids subject to smoldering shall be protected by multipurpose dry chemical systems where the dry chemical can reach all surfaces involved in combustion.

6.1.5.1 Bicarbonate-based dry chemicals shall not be used for protection against the type of fires described in 6.1.5.

6.2 Hazard Specifications.

6.2.1 Enclosure. In the design of total flooding systems, the characteristics of the enclosure shall be as specified in 6.2.1.1 through 6.2.1.4.

6.2.1.1 The total area of unclosable openings for which no compensation is provided shall not exceed 1 percent of the total area of the sides, top, and bottom of the enclosure.

6.2.1.2 Unclosable openings having an area in excess of 1 percent and not exceeding 5 percent shall be compensated for by the provision of additional dry chemical.

6.2.1.3 Unclosable openings having an area in excess of 5 percent of the total enclosure area and not exceeding 15 percent shall be screened by local application of additional dry chemical. *(See 6.2.2.6.)*

6.2.1.4 Pre-engineered systems shall be permitted to protect the permanent enclosures with unclosable openings using different amounts of dry chemicals from those specified in 6.2.2.6, only when listed for such use.

6.2.2 Leakage and Ventilation. The leakage of dry chemical from the protected space shall be minimized because the effectiveness of the flooding system depends on obtaining an extinguishing concentration of dry chemical.

6.2.2.1 Where possible, openings such as doorways, windows, and so on, shall be arranged to close before, or simultaneously with, the start of the dry chemical discharge.

6.2.2.2 Where forced-air ventilating systems are involved, they shall be either shut down or closed before, or simultaneously with, the start of the dry chemical discharge.

6.2.2.3* The quantity of dry chemical and the flow rate shall be sufficient to create a fire-extinguishing concentration in all parts of the enclosure.

6.2.2.4 Volume Allowances. In calculating the net volume to be protected, allowance shall be permitted for permanently located structures that materially reduce the volume.

6.2.2.5 Rate of Application. In engineered systems, the minimum design rate of application shall be based on the quantity of dry chemical and the maximum time to obtain the design concentration, as described in the manufacturer's listed design and installation manual.

6.2.2.5.1 In engineered systems, the rate of application shall be such that the design concentration in all parts of the enclosure shall be obtained within 30 seconds.

6.2.2.6 Engineered and pre-engineered systems intended for the protection of total flooding applications that have unclosable openings with areas in excess of 1 percent of the total area of the sides, top, and bottom of the enclosure, and not exceeding 5 percent, shall be compensated for by the use of supplemental dry chemical in the proportion of not less than 0.5 lb/ft^2 (2.44 kg/m^2) of unclosed opening, applied through the regular distribution system.

6.2.2.6.1 Where the unclosable openings have areas exceeding 5 percent of the total of the sides, top, and bottom of the enclosure, and not exceeding 15 percent, compensation shall be furnished by additional dry chemical in the proportion of not less than 1 lb/ft^2 (4.88 kg/m^2) of unclosed opening, applied simultaneously by local application over the openings.

6.2.2.6.2 Pre-engineered systems shall be permitted to protect unclosable openings using different amounts of dry chemicals from those specified in 6.2.2.6, only when listed for such use.

6.2.2.6.3 For ventilating systems that will not be shut down, supplementary dry chemical shall be added to the protected volume through the regular distribution system.

6.2.2.6.4 The supplementary dry chemical shall be added at the point or points of air inlet and shall be in proportion to the volume of air removal during the period of dry chemical discharge, calculated as if it were additional volume to be protected.

6.2.2.6.5 Pre-engineered systems listed for restaurant hood and duct protection shall be permitted for use with or without shutoff of the ventilation system or closure of dampers.

Chapter 7 Local Application Systems

7.1* Uses.

7.1.1 Local application systems shall be used for the extinguishment of fires in flammable or combustible liquids, gases, and shallow solids (e.g., paint deposits) where the hazard is not enclosed or where the enclosure does not conform to the requirements for total flooding.

7.1.2 Where an enclosure exists and conforms to the requirements of Section 6.1, total flooding application shall be used as directed in 6.2.1.1 and 6.2.2.6.

7.2 Hazard Specifications.

7.2.1* Extent of Hazard. The hazard shall be isolated from other hazards or combustibles so that fire will not spread outside the protected area.

7.2.2 The entire hazard shall be protected.

7.2.3* The hazard shall include all areas that are or might become coated by combustible or flammable liquids or shallow solid coatings and all associated materials or equipment

--`,,,-`-`,,`,,`,`,,`---

Copyright National Fire Protection Association
Provided by IHS under license with NFPA
No reproduction or networking permitted without license from IHS
Not for Resale

that might extend fire outside or lead fire into the protected area.

7.2.4* Location. The design of the system shall consider the location of the hazard, which might be indoors, partly sheltered, or completely outdoors.

7.2.5 For flammable liquid fires, the nozzles shall be placed tankside or overhead, or a combination of tankside and overhead within the limits of the listing, and located to prevent splashing during discharge.

7.2.6 Coated Surfaces. Coated surface areas shall be treated as if they were deep-layer flammable liquid areas (because no distinction has been made in this standard).

7.2.7 Duration of Discharge. The minimum effective discharge time shall be determined by the required minimum quantity of dry chemical and the minimum application rate.

7.2.7.1 Minimum effective discharge time for pre-engineered systems shall be determined in accordance with Chapter 9.

Chapter 8 Hand Hose Line Systems

8.1 Separate Supplies.

8.1.1 Where hand hose lines are used on a hazard that is also protected by a fixed system, separate dry chemical supplies shall be provided.

8.1.2 If a single dry chemical supply is used for both a hand hose line system and a fixed nozzle system, the hazards protected by the two systems shall be separated so that the hand hose lines cannot be simultaneously used on the hazard protected by the fixed nozzle system.

8.1.3 Hand hose line systems shall be permitted to supplement fixed nozzle fire protection systems or to supplement portable fire extinguishers for the protection of specific hazards for which dry chemical is a suitable extinguishing agent.

8.1.4 Hand hose systems shall not be used as a substitute for dry chemical extinguishing systems equipped with fixed nozzles except where the hazard cannot be adequately or economically provided with fixed nozzle protection.

8.1.5 The decision as to whether hose lines shall be permitted to be used for a particular hazard shall be made by the authority having jurisdiction.

8.2 Location, Spacing, and Actuation.

8.2.1* Location. Hand hose line stations shall be placed so that they are easily accessible and shall have hose lines long enough to reach the most distant hazard that they are expected to protect.

8.2.2 Spacing. If multiple hose stations are used, they shall be spaced so that any area within the hazard can be covered by one or more hose lines.

8.2.3 Actuation. Manual actuation of the dry chemical system shall be possible at each hose line station.

8.3 Dry Chemical Requirements.

8.3.1* Rate and Duration of Discharge. A hand hose line shall have a sufficient quantity of dry chemical to permit its effective use for a minimum of 30 seconds.

8.3.1.1 The minimum flow rate also shall be sufficient to prevent surging and interrupted discharge.

8.3.1.2 The value for minimum flow rate shall be confirmed by a testing laboratory.

8.3.2 Simultaneous Use of Hose Lines. Where simultaneous use of two or more hose lines is possible, a sufficient quantity of dry chemical shall be available to supply the maximum number of nozzles that are likely to be used at any one time for at least 30 seconds and at the appropriate flow rates.

8.3.3* Operation of Hose Lines.

8.3.3.1 The pressurizing valve shall remain in the open position during the entire fire-fighting operation.

8.3.3.2 The hose lines shall be cleared of dry chemical immediately after use.

8.4 Training. All personnel who are likely to use this equipment shall be kept properly trained in its operation and in the fire-fighting techniques applicable to this equipment.

Chapter 9 Pre-Engineered Systems

9.1 Uses.

9.1.1* Pre-engineered systems shall be installed to protect hazards within the limitations of the listing.

9.1.2 Fire-extinguishing systems referenced in 9.1.1 shall comply with UL 1254, *Pre-Engineered Dry Chemical Extinguishing System Units*, or equivalent listing standard.

9.1.3 Only system components referenced in the manufacturer's listed installation and maintenance manual or alternative suppliers' components that are listed for use with the specific extinguishing system shall be used.

9.2 Types of Systems. Pre-engineered dry chemical systems shall be of the following types:

(1) Local application
(2) Total flooding
(3) Hand hose line
(4) Combination of local application and total flooding

9.3 Restaurant Hood, Duct, and Cooking Appliance Systems.

9.3.1 Each protected cooking appliance(s), individual hood(s), and branch exhaust duct(s) directly connected to the hood shall be protected by a single system or by systems designed for simultaneous operation.

9.3.1.1 At least one fusible link or heat detector shall be installed within each exhaust duct opening in accordance with the manufacturer's listing.

9.3.1.2 A fusible link or heat detector shall be provided above each protected cooking appliance and in accordance with the extinguishing system manufacturer's listing.

9.3.1.3 Fusible links or heat detectors located at or within 12 in. (305 mm) into the exhaust duct opening and above the protected appliance shall be permitted to meet the requirements of 9.3.1.2.

9.3.2 Fire-extinguishing systems referenced in 9.3.1 shall comply with UL 300, *Fire Extinguishing Systems for Protection of Restaurant Cooking Areas, Fire Testing of*, or equivalent listing standard.

--`,,,-`-`,,`,,`,`,,`---
Copyright National Fire Protection Association
Provided by IHS under license with NFPA
No reproduction or networking permitted without license from IHS
Not for Resale

9.3.2.1 Fixed automatic dry chemical extinguishing systems shall be installed in accordance with the terms of the listing, the manufacturer's instructions, and this standard.

9.3.3 Systems protecting two or more hoods or plenums, or both, that meet the requirements of Section 5.2 shall be installed to ensure the simultaneous operation of all systems protecting the hoods, plenums, or both, and associated cooking appliances located below the hoods.

9.3.4* Protection of Common Exhaust Duct.

9.3.4.1 Common exhaust ducts shall be protected by one of the following methods:

(1)*Simultaneous operation of all independent hood, duct, and appliance protection systems
(2)*Simultaneous operation of any hood, duct and appliance protection system and the system(s) protecting the entire common exhaust duct

9.3.4.1.1 A fusible link or heat detector shall be located at each branch duct–to–common duct connection.

9.3.4.1.2 Actuation of any branch duct-to–common duct fusible link or heat detector shall actuate the common duct system only, or when all systems are connected to a control panel in accordance with *NFPA 72, National Fire Alarm Code*.

9.3.4.2 All sources of fuel or heat to appliances served by the common exhaust duct shall be shut down upon actuation of any protection system in accordance with 9.3.5.

9.3.4.3 The building owner(s) shall be responsible for the protection of a common exhaust duct(s) used by more than one tenant.

9.3.4.3.1 The tenant shall be responsible for the protection of a common exhaust duct(s) serving hoods located within the tenant's space and up to the point of connection to the building owner's common exhaust duct.

9.3.4.3.2 The tenant's common duct shall be considered a branch duct to the building owner's common duct.

9.3.5* Shutoff Devices. Upon activation of any cooking equipment fire-extinguishing system, all sources of fuel and electric power that produce heat to all equipment protected by the system shall be shut down.

9.3.5.1 Steam supplied from an external source does not require shutdown.

9.3.5.2* Exhaust fans and dampers are not required to be shut down upon system actuation.

9.3.5.3 Any gas appliance not requiring protection but located under the same ventilating equipment shall be automatically shut off upon actuation of any extinguishing system.

9.3.5.4 Shutoff devices shall require manual resetting prior to fuel or power being restored.

9.4 Manual Activation Requirements.

9.4.1 Such mechanical means shall not rely on any of the hardware components that would be common to the automatic function of the fixed fire-extinguishing equipment.

9.4.2 The means for manual actuator(s) actuation shall be mechanical and shall not rely on electrical power for actuation.

9.4.3 Electrical power shall be permitted to be used for manual actuation if a reserve power supply is provided in accordance with Section 9.6.

9.4.4 The manual actuation means of an automatic extinguishing system shall be totally independent of the automatic means.

9.4.5 A failure of a system component shall not impair both the automatic and manual means of actuation.

9.5 System Annunciation Requirements.

9.5.1 Upon actuation of a fixed automatic fire-extinguishing system, an audible alarm or visual indicator shall be provided to show that the system has actuated.

9.5.2 Where a fire alarm signaling system is serving the occupancy where the extinguishing system is located, the actuation of the fixed automatic fire-extinguishing system shall actuate the fire alarm signaling system.

9.6 System Supervision.

9.6.1 Where electrical power is required to operate the fixed automatic fire-extinguishing system, it shall be monitored by a supervisory alarm, with a reserve power supply provided.

9.6.2 Where fixed automatic fire-extinguishing systems include automatic mechanical detection and actuation as a backup detection system, electrical power monitoring is not required.

9.6.3 Where fixed automatic fire-extinguishing systems are interconnected or interlocked with the cooking equipment power sources so that if the fire-extinguishing system becomes inoperable due to power failure, all sources of fuel and heat to all cooking equipment serviced by that hood shall automatically shut off and electrical power monitoring is not required.

9.7 Review and Certification.

9.7.1 If required, complete drawings of the system installation shall be submitted to the authority having jurisdiction.

9.7.1.1 System drawings shall include the following:

(1) Hood(s)
(2) Exhaust duct(s)
(3) Appliances
(4) Interface of the fire-extinguishing system detectors
(5) Piping
(6) Nozzles
(7) Fuel shutoff devices
(8) Agent storage container(s)
(9) Manual actuation device(s)

9.7.2* Design and installation of systems shall be performed only by persons properly trained and qualified to design and/or install the specific system being provided.

9.7.2.1 The installer shall provide certification to the authority having jurisdiction that the installation is in complete agreement with the terms of the listing and the manufacturer's instructions and/or approved design.

9.8* Vehicle Fueling Service Station Systems.

9.8.1 Each hazard protected by two or more systems shall have these systems connected for simultaneous operation.

9.8.2 The protected area of each hazard shall include the area within the arc scribed by the nozzle end of the hose on each vehicle fuel dispenser.

Copyright National Fire Protection Association
Provided by IHS under license with NFPA
No reproduction or networking permitted without license from IHS
Not for Resale

9.8.2.1 The manufacturer of the system shall be consulted to determine the need for additional coverage under adverse wind conditions.

9.8.3 Equipment shall be provided to shut down all vehicle fuel dispensers simultaneously upon system actuation.

9.8.3.1 In the event of a system discharge, the hazard being protected shall not be returned to service until the system is recharged and operational.

9.8.4 Automatic detection and actuation of the extinguishing system shall be provided.

9.8.4.1 The manufacturer's listed installation and maintenance manual shall be consulted regarding the type and location of the detectors.

9.8.5 A remote manual actuator or operating device shall be provided in a conspicuous and accessible location away from the vehicle fuel dispensers and protected area. *(See Section 4.4.)*

9.8.6 All discharge nozzles shall be located so as to minimize the likelihood of damage or misalignment and within the limitations and constraints of the manufacturer's listed installation and maintenance manual.

9.9 Systems for the Protection of Mobile Equipment.

9.9.1* Only pre-engineered dry chemical systems, including detection systems that have been listed for such use, shall be installed on mobile equipment.

9.9.2 Compartments or areas that could be subject to fire shall be protected in accordance with the manufacturer's listed installation and maintenance manual.

9.9.3 Each protected compartment or area shall be provided with a listed fire detection device specified in the manufacturer's listed installation and maintenance manual to automatically actuate the extinguishing system.

9.9.3.1 Manual actuation only shall be permitted to be provided if acceptable to the authority having jurisdiction.

9.9.4 Only the flexible hose and hose fittings specified in the manufacturer's listed installation and maintenance manual shall be used.

9.9.5 All discharge nozzles shall be located to minimize the likelihood of damage or misalignment and within the limitations and constraints of the manufacturer's listed installation and maintenance manual.

9.9.6 Location of agent containers, expellant gas cartridges or cylinders, and a manual actuator station(s) shall be appropriate to each application, protected against physical damage, and accessible.

9.9.7 At least one easily accessible manual actuator or operating device shall be provided for use by the equipment operator.

9.9.8 An additional manual actuator or operating device shall be located so that it is in the path of egress and operable from ground level.

9.9.9 If the system is provided with a discharge delay device, both audible and visual alarms shall be provided to warn of the impending system discharge.

9.9.10 In the event of system discharge, the vehicle being protected shall not be returned to service until the system is recharged and operational.

9.10 Hand Hose Line Systems.

9.10.1 Dry chemical hand hose line systems shall be provided with turrets, skid-mounted hose reels, remote hose reels, or combinations of these.

9.10.2 The length and size of piping and hose and the type of nozzles shall be within the limitations stated in the manufacturer's listed installation and maintenance manual.

9.10.3 Differences in elevation between the dry chemical storage tank and each turret or hose reel shall be within the limitations of the manufacturer's listed installation and maintenance manual.

9.10.4 If multiple cylinders are used to pressurize the dry chemical agent containers, each cylinder shall be provided with a pressure gauge and a manual means of operation.

9.10.4.1 Slave cylinders without manual actuators shall be permitted if at least two master cylinders with manual actuators are provided.

9.10.4.2 Only one manual actuator shall be required to be provided for self-contained skid-mounted systems.

9.10.5 Each turret and hose reel shall be provided with a shutoff nozzle or flow control valve.

9.10.6 An integral method shall be provided to blow out all system piping and hose reels after any use.

9.10.7 Turret nozzles shall be provided with caps or other suitable devices to prevent moisture or foreign materials from entering the turret or piping.

Chapter 10 Plans and Acceptance Tests

10.1 Specifications. Specifications for dry chemical extinguishing systems shall be drawn up with care under the supervision of a trained person and with the advice of the authority having jurisdiction.

10.1.1 The provisions of 10.1.2 through 10.1.5 shall be included in the system specifications.

10.1.2 The specifications shall designate the authority having jurisdiction and indicate whether plans shall be required for pre-engineered systems.

10.1.2.1 Plans shall be required for all engineered systems.

10.1.3 The specifications shall state that the installation shall conform to this standard and meet the approval of the authority having jurisdiction.

10.1.3.1 The specification shall indicate that only equipment that is specifically listed and compatible for use with the extinguishing system shall be used.

10.1.3.1.1 The specification shall indicate special auxiliary devices acceptable to the system manufacturer and the authority having jurisdiction.

10.1.4 The specifications shall include system acceptance tests.

10.1.5 The specifications shall indicate the hazard to be protected and shall include such information as physical dimensions, combustibles, air-handling equipment, heat sources, and so on.

Copyright National Fire Protection Association
Provided by IHS under license with NFPA
No reproduction or networking permitted without license from IHS
Not for Resale

10.2 Plans. Where plans are required, they shall be prepared by qualified persons trained in the design and application of these systems.

10.2.1 The plans shall be drawn to an indicated scale or be suitably dimensioned and shall be reproducible.

10.2.2 The plans shall contain sufficient detail to enable the authority having jurisdiction to evaluate the hazard or hazards and to evaluate the effectiveness of the system.

10.2.2.1 The details on the hazards shall include the materials involved, the location and arrangement, and the exposure to the hazard.

10.2.3 The details on the system shall include sufficient information and calculations on the following:

(1) Amount of dry chemical
(2) The size, length, and arrangement of connected piping, or piping and hose
(3) The description and location of nozzles so that the adequacy of the system can be determined

10.2.3.1 Flow rates of nozzles used shall be provided for engineered systems.

10.2.3.2 Information shall be submitted pertaining to the location and function of detection devices, operating devices, auxiliary equipment, and electrical circuitry, if used.

10.2.3.3 Sufficient information shall be indicated to properly identify the apparatus and devices used.

10.3 Approval of Plans. Where plans are required, they shall be submitted to the authority having jurisdiction for approval before work starts.

10.3.1 Where field conditions necessitate any substantial change from the approved plan, the corrected as-installed plans shall be submitted to the authority having jurisdiction for approval.

10.4 Approval of Installations. The completed system shall be tested by qualified personnel.

10.4.1 The tests shall determine that the system has been properly installed and will function as intended.

10.4.1.1 Only listed equipment and devices shall be used in these systems.

10.4.2 The installer shall certify that the installation has been made in accordance with the approved plans and the listing of a testing laboratory.

10.4.3 Acceptance tests shall include a discharge of dry chemical in sufficient amounts to verify that the system is properly installed and functional.

10.4.3.1 The method of verification shall be acceptable to the authority having jurisdiction.

10.4.3.2 Piping shall not be hydrostatically tested.

10.4.3.3 Where pressure testing is required, it shall be by means of a dry gas.

10.4.3.4 The labeling of devices with proper designations and instructions shall be checked.

10.4.3.5 The use of dry chemical for the approval test shall be permitted to be waived by the authority having jurisdiction.

10.4.4 After any discharge of dry chemical, all piping and nozzles shall be blown clean using compressed dry air or nitrogen.

10.4.4.1 The system shall be properly charged and placed in the normal "set" condition.

10.5 Manual. The owner shall be provided with a copy of the manufacturer's listed installation and maintenance manual or listed owner's manual.

Chapter 11 Inspection, Maintenance, and Recharging

11.1 General Requirements.

11.1.1 Where dry chemical pressure containers are not attached to piping or hand hose lines, the discharge outlet shall be provided with a protective diffusing safety cap to protect personnel from recoil and high-flow discharge in case of accidental actuation.

11.1.1.1 Protective caps also shall be used on empty pressure containers to protect threads.

11.1.1.2 Protective caps shall be provided by the manufacturer of the equipment.

11.1.2 Storage. Storage of charging supplies of dry chemical shall be in a constantly dry area, and the dry chemical shall be contained in metal drums or other containers that will prevent the entrance of moisture even in small quantities.

11.1.2.1 Prior to the dry chemical chamber being charged, the dry chemical shall be checked carefully to determine that it is in a flowing condition.

11.1.3* A trained person who has undergone the instructions necessary to perform the maintenance and recharge service reliably and has the applicable manufacturer's installation and maintenance manual and service bulletins shall service the dry chemical extinguishing system at intervals not more than 6 months apart as outlined in Section 11.3.

11.1.4 All dry chemical extinguishing systems shall be inspected in accordance with the owner's manual and maintained and recharged in accordance with the manufacturer's listed installation and maintenance manual and service bulletins.

11.1.5 Recharge Agents.

11.1.5.1 Quality. The dry chemical used in the system shall be supplied by the equipment manufacturer.

11.1.5.1.1 The characteristics of the system are dependent on the composition of the dry chemical and the type of expellant gas, as well as other factors.

11.1.5.1.2 It is imperative to use the dry chemical provided by the equipment manufacturer and the type of expellant gas specified by the equipment manufacturer.

11.1.5.1.3 Where carbon dioxide or nitrogen is used as the expellant gas, it shall be of good commercial grade and free of water and other contaminants that might cause container corrosion.

11.1.6 System access for inspection or maintenance that requires opening panels in fire chases or ducts, or both, shall not be permitted while any appliance(s) or equipment protected by that system is in operation.

Copyright National Fire Protection Association
Provided by IHS under license with NFPA
No reproduction or networking permitted without license from IHS
Not for Resale

11.2 Owner's Inspection.

11.2.1 On a monthly basis, inspection shall be conducted in accordance with the manufacturer's listed installation and maintenance manual or owner's manual.

11.2.1.1 As a minimum, this "quick check" or inspection shall include verification of the following:

(1) The extinguishing system is in its proper location.
(2) The manual actuators are unobstructed.
(3) The tamper indicators and seals are intact.
(4) The maintenance tag or certificate is in place.
(5) The system shows no physical damage or condition that might prevent operation.
(6) The pressure gauge(s), if provided, is in operable range.
(7) The nozzle blowoff caps, where provided, are intact and undamaged.
(8) Neither the protected equipment nor the hazard has been replaced, modified, or relocated.

11.2.2 If any deficiencies are found, appropriate corrective action shall be taken immediately.

11.2.3 Personnel making inspections shall keep records for those extinguishing systems that were found to require corrective actions.

11.2.4 At least monthly, the date the inspection is performed and the initials of the person performing the inspection shall be recorded. The records shall be retained until the next semiannual maintenance.

11.3 Maintenance.

11.3.1* At least semiannually, maintenance shall be conducted in accordance with the manufacturer's listed installation and maintenance manual.

11.3.1.1 As a minimum, such maintenance shall include the following:

(1) A check to see that the hazard has not changed
(2) An examination of all detectors, expellant gas container(s), agent container(s), releasing devices, piping, hose assemblies, nozzles, signals, and all auxiliary equipment
(3)*Verification that the agent distribution piping is not obstructed
(4) Examination of the dry chemical (If there is evidence of caking, the dry chemical shall be discarded and the system shall be recharged in accordance with the manufacturer's instructions.)

11.3.1.2 Dry chemical in stored pressure systems shall not require semiannual examination but shall be examined at least every 6 years.

11.3.1.3 Where semiannual maintenance of any dry chemical containers or system components reveals conditions such as, but not limited to, corrosion or pitting in excess of the manufacturer's limits, structural damage or fire damage, or repairs by soldering, welding, or brazing, the affected part(s) shall be replaced or hydrostatically tested in accordance with the recommendations of the manufacturer or the listing agency. The hydrostatic testing of dry chemical containers shall follow the applicable procedures outlined in Section 11.5.

11.3.1.4* All dry chemical systems shall be tested, which shall include the operation of the detection system, signals, and releasing devices, including manual stations and other associated equipment.

11.3.1.5 Where the maintenance of the system(s) reveals defective parts that could cause an impairment or failure of proper operation of the system(s), the affected parts shall be replaced or repaired in accordance with the manufacturer's recommendations.

11.3.1.6 The maintenance report, including any recommendations, shall be filed with the owner or with the designated party responsible for the system.

11.3.1.7* Each dry chemical system shall have a tag or label indicating the month and year the maintenance is performed and identifying the person performing the service. Only the current tag or label shall remain in place.

11.3.2* Fixed temperature-sensing elements of the fusible metal alloy type shall be replaced at least annually from the date of installation.

11.3.2.1 Upon removal the links shall be destroyed.

11.3.2.2 The year of manufacture and the date of installation of the fixed temperature-sensing element shall be marked on the system inspection tag.

11.3.2.3 The tag shall be signed or initialed by the installer.

11.3.3 Fixed temperature-sensing elements other than the fusible metal alloy type shall be permitted to remain continuously in service, provided they are inspected and cleaned or replaced if necessary in accordance with the manufacturer's instructions every 12 months or more frequently to ensure proper operation of the system.

11.4 Recharging.

11.4.1 All extinguishing systems shall be recharged after use or as indicated by an inspection or a maintenance check.

11.4.2 Systems shall be recharged in accordance with the manufacturer's listed installation and maintenance manual.

11.5 Hydrostatic Testing. Hydrostatic testing shall be performed by persons trained in pressure-testing procedures and safeguards and having available suitable testing equipment, facilities, and an appropriate service manual(s).

11.5.1* The following parts of dry chemical extinguishing systems shall be subjected to a hydrostatic pressure test at intervals not exceeding 12 years:

(1) Dry chemical containers
(2) Auxiliary pressure containers
(3) Hose assemblies

Exception No. 1: Dry chemical containers that are part of extinguishing systems having an agent capacity exceeding 150 lb (68 kg).

Exception No. 2: Auxiliary pressure containers not exceeding 2 in. (0.05 m) outside diameter and less than 2 ft (0.6 m) in length.

Exception No. 3: Auxiliary pressure containers bearing the DOT "3E" marking.

11.5.2 Dry chemical containers, auxiliary pressure containers, and hose assemblies shall be subjected to a hydrostatic test pressure equal to the marked factory test pressure or the test pressure specified in the manufacturer's listed installation and maintenance manual.

11.5.2.1 No leakage, rupture, or movement of hose couplings shall be permitted.

--`,,,-`-`,,`,,`,`,,`---
Copyright National Fire Protection Association
Provided by IHS under license with NFPA
No reproduction or networking permitted without license from IHS
Not for Resale

11.5.2.2 The test procedures shall be in accordance with the manufacturer's detailed written hydrostatic test instructions.

11.5.2.3* Prior to being refilled or transported, in accordance with DOT or TC requirements, containers bearing DOT or TC markings shall be retested or replaced in accordance with the appropriate DOT or TC requirements.

11.5.3 Dry chemical agent removed from the containers prior to hydrostatic testing shall be discarded.

11.5.4 Care shall be taken to ensure that all tested equipment is thoroughly dried prior to reuse.

11.5.5 To protect the hazard during hydrostatic testing, if there is no connected reserve, alternate protection acceptable to the authority having jurisdiction shall be provided.

Annex A Explanatory Material

Annex A is not a part of the requirements of this NFPA document but is included for informational purposes only. This annex contains explanatory material, numbered to correspond with the applicable text paragraphs.

A.1.1 The dry chemical systems described in this standard are designed to discharge dry chemical from fixed nozzles and piping or from hose lines by means of an expellant gas. The intent of the standard is to present the design considerations applicable to these systems. It contains only the essential requirements and recommendations needed to make the standard workable in the hands of those skilled in this field.

Because the flow of dry chemical (solid particles suspended in a gaseous medium) does not follow general hydraulic theories, most of the flow principles have been determined experimentally. The dry chemicals produced by various manufacturers usually are not identical in all characteristics, and each manufacturer designs equipment for use with a specific dry chemical. System design principles applicable to the products of one manufacturer are not applicable to the products of another manufacturer. As a result, it is not practical to include system design details as a part of this standard.

It is now generally accepted that the flame-extinguishing properties of dry chemicals are due to the interaction of the particles, which stops the chain reaction that takes place in flame combustion. Dry chemicals vary in their flame extinguishing effectiveness. Multipurpose dry chemical owes its effectiveness in extinguishing fires involving ordinary combustibles, such as wood and paper, to the formation of a glow-retarding coating over the combustible material. For additional information on dry chemicals and their extinguishing characteristics, see A.4.6.1.

Portable dry chemical equipment is covered in NFPA 10, *Standard for Portable Fire Extinguishers.*

A.1.5.1.1 See IEEE/ASTM SI 10, *Standard for Use of the International System of Units (SI): The Modern Metric System.*

A.1.6 Although training and qualification might be available elsewhere, it is recommended that such training and qualification be performed by the manufacturer of the equipment being installed or serviced.

It might be necessary for many of those charged with purchasing, inspecting, testing, approving, operating, and maintaining this equipment to consult an experienced fire protection engineer competent in this field in order to discharge their respective duties effectively.

A.3.2.1 Approved. The National Fire Protection Association does not approve, inspect, or certify any installations, procedures, equipment, or materials; nor does it approve or evaluate testing laboratories. In determining the acceptability of installations, procedures, equipment, or materials, the authority having jurisdiction may base acceptance on compliance with NFPA or other appropriate standards. In the absence of such standards, said authority may require evidence of proper installation, procedure, or use. The authority having jurisdiction may also refer to the listings or labeling practices of an organization that is concerned with product evaluations and is thus in a position to determine compliance with appropriate standards for the current production of listed items.

A.3.2.2 Authority Having Jurisdiction (AHJ). The phrase "authority having jurisdiction," or its acronym AHJ, is used in NFPA documents in a broad manner, since jurisdictions and approval agencies vary, as do their responsibilities. Where public safety is primary, the authority having jurisdiction may be a federal, state, local, or other regional department or individual such as a fire chief; fire marshal; chief of a fire prevention bureau, labor department, or health department; building official; electrical inspector; or others having statutory authority. For insurance purposes, an insurance inspection department, rating bureau, or other insurance company representative may be the authority having jurisdiction. In many circumstances, the property owner or his or her designated agent assumes the role of the authority having jurisdiction; at government installations, the commanding officer or departmental official may be the authority having jurisdiction.

A.3.2.4 Listed. Equipment, materials, or services included in a list published by an organization that is acceptable to the authority having jurisdiction and concerned with evaluation of products or services, that maintains periodic inspection of production of listed equipment or materials or periodic evaluation of services, and whose listing states that either the equipment, material, or service meets appropriate designated standards or has been tested and found suitable for a specified purpose.

A.3.3.3 Calculation and Design. This information is not required for listed pre-engineered systems because these systems must be installed in accordance with their pretested limitations described in the manufacturer's installation manual.

A.3.3.13.1 Manufacturer's Listed Installation and Maintenance Manual. It contains a description of the hazards that can be protected as well as the limitations of the dry chemical extinguishing system. This pamphlet also requires that the dry chemical extinguishing system be designed, installed, inspected, maintained, and serviced in accordance with this standard.

A.3.4.5 Pre-Engineered Systems. These systems have the specific pipe size, maximum and minimum pipe lengths, flexible hose specifications, number of fittings, and number and types of nozzles prescribed by a testing laboratory. The maximum and minimum pipe lengths and the number of fittings should be permitted to be expressed in equivalent feet of pipe. The hazards protected by these systems are specifically limited as to type and size by a testing laboratory, based on actual fire tests. Limitations on hazards that are permitted to be protected by these systems and piping and nozzle configurations are contained in the manufacturer's listed installation and maintenance manual, which is part of the listing of the system.

Copyright National Fire Protection Association
Provided by IHS under license with NFPA
No reproduction or networking permitted without license from IHS
Not for Resale

A.4.2.1 Normally, identifying markings on the hose will indicate the acceptability of the hose for this purpose.

A.4.5.1 Piping should be installed in accordance with good commercial practice. Care should be taken to avoid possible restrictions due to foreign matter, faulty fabrication, or improper installation.

The piping system should be securely supported with due allowance for agent thrust forces, thermal expansion and contraction, and should not be subjected to mechanical, chemical, vibration, or other damage. ANSI/ASME B31.1, *Power Piping*, should be consulted for guidance on this matter. Where explosions are likely, the piping should be attached to supports that are least likely to be displaced.

Although dry chemical piping systems are not subjected to continuous pressurization, provisions should be made to ensure that the type of piping installed can withstand the maximum stress at maximum storage temperatures.

A.4.5.1.3 In performing the calculation, the guidelines provided in the FSSA publication, *Pipe Design Handbook for Use with Special Hazard Fire Suppression Systems*, should be consulted.

A.4.5.3 The piping for a dry chemical system embodies distinctive features necessitated by the characteristics of the agent. The use of flexible piping or hose in a dry chemical system introduces a number of factors to be considered that do not normally affect rigid piping. The most important of these is the nature of any changes of direction. The minimum radius of curvature for any flexible hose to be used in a dry chemical system is usually shown in the listing information for a particular system. Other areas of concern that are evaluated in the test for listing are resistance to the effects of vibration, flexure, tension, torsion, temperature, flame, compression, and bending. It is also necessary for the hose to have the strength to contain the dry chemical during discharge and to be made of materials that will be resistant to atmospheric corrosion.

A.4.6.1 A dry chemical extinguishing agent is a finely divided powdered material that has been specially treated to be water repellent and capable of being fluidized and free-flowing so that it can be discharged through hose lines and piping when under expellant gas pressure. Dry chemicals currently in use are described briefly as follows.

Sodium Bicarbonate-Based Dry Chemical. This agent consists primarily of sodium bicarbonate ($NaHCO_3$) and is suitable for use on all types of flammable liquid and gas fires (Class B) and for fires involving energized electrical equipment (Class C).

It is particularly effective on fires in common cooking oils and fats. In combination with these materials, the sodium bicarbonate-based agent reacts to form a type of soap (saponification), which floats on a liquid surface, such as in deep-fat fryers, and effectively prevents reignition of the grease.

Sodium bicarbonate-based dry chemical is not generally recommended for the extinguishment of fires in ordinary combustibles (Class A), although it can have a transitory effect in extinguishing surface flaming of such materials.

Dry Chemicals Based on the Salts of Potassium. Commercially available agents are essentially potassium bicarbonate ($KHCO_3$), potassium chloride (KCl), and urea-based potassium bicarbonate ($KC_2N_2H_3O_3$). All three agents are suitable for use on all types of flammable liquid and gas fires (Class B) and also for fires involving energized electrical equipment (Class C).

It is generally recognized that salts of potassium are more effective in terms of chemical extinguishment mechanisms than sodium salts in extinguishing Class B fires, except those in deep-fat fryers and other cooking equipment.

Dry chemicals based on the salts of potassium are not generally recommended for the extinguishment of fires in ordinary combustibles (Class A), although they can have a transitory effect in extinguishing surface flaming of such materials.

Multipurpose Dry Chemical. This agent has as its base monoammonium phosphate ($NH_4H_2PO_4$) and is similar in its effect on Class B and Class C fires to the other dry chemicals. However, it does not possess a saponification characteristic and should not be used on fires in deep-fat fryers. Unlike the other dry chemicals, it does have a considerable extinguishing effect on Class A materials. The agent, when heated, decomposes to form a molten residue that will adhere to heated surfaces. On combustible solid surfaces (Class A), this characteristic excludes the oxygen necessary for propagation of the fire.

Foam-Compatible Dry Chemicals. When or where foam dry chemical systems are used or proposed for the protection of a hazard, the manufacturer should be consulted as to the compatibility of the agents.

A.4.6.3 Mixtures of certain dry chemicals can generate dangerous pressures and form lumps.

A.4.9.2 Independent inspection and certification is recommended.

A.5.1.1 Gas fires normally should not be extinguished unless the source of burning gas can be shut off, because an explosive mixture can be formed with air that, if ignited, can cause greater damage than the original fire.

Factors that determine whether the gas fire should be extinguished prior to shutting off the gas supply are as follows.

Accessibility of Gas Shutoff Valves. Where water hose streams are not available, it might be necessary to extinguish the fire in order to reach the shutoff valves.

The Proximity of Other Flammable or Combustible Materials. If ignition of these materials could result in a more hazardous condition, the fire might have to be extinguished prior to gas shutoff.

Personnel Rescue. Dry chemical should be applied at flow rates and discharge patterns that will be effective. Gas line flange, line rupture, or impinging fires might need special flow rates and discharge patterns.

A.5.1.1(1) CAUTION: Extinguishment of flammable liquid fires, especially Class I liquids *(see NFPA 30, Flammable and Combustible Liquids Code)*, can result in a reflash unless all sources of ignition have been removed.

A.5.1.1(2) CAUTION: Flammable gases present a potential explosion hazard if the flow of gas is not stopped before or during extinguishment.

A.5.1.2.1 Dry chemical, when discharged, will drift from the immediate discharge area and settle on surrounding surfaces. Prompt cleanup will minimize possible staining or corrosion of certain materials that can take place in the presence of moisture.

Monoammonium phosphate and potassium chloride are slightly acidic and, in the presence of moisture, can corrode metals such as steel, cast iron, and aluminum.

Potassium bicarbonate, sodium bicarbonate, and urea-based potassium bicarbonate are slightly basic and, in the presence of moisture, can corrode metals such as aluminum, aluminum brass, aluminum bronze, and titanium.

Such corrosion will vary from a dull or tarnished finish to mild surface corrosion. Corrosion should not be of concern when ac-

--`,,`-`-`,,`,,`,`,,`---

Copyright National Fire Protection Association
Provided by IHS under license with NFPA
No reproduction or networking permitted without license from IHS
Not for Resale

companied by prompt cleanup. For the most part, these dry chemical agents can be readily cleaned up by wiping, vacuuming, or washing the exposed materials. A monoammonium phosphate-based agent will need some scraping and washing if the exposed surfaces were hot when the agent was applied.

Upon exposure to temperatures in excess of 250°F (121°C) or relative humidity in excess of 50 percent, deposits will be formed that can be corrosive, conductive, and difficult to remove.

A.5.4.1.1 The limiting specifications for a dry chemical system are a function of the flow characteristics of the particular dry chemical and the equipment used by the manufacturer of the system. Therefore, it is not possible to specify in this standard the exact values for the quantity needed, rate of flow needed, or nozzle distribution. The considerations provided in this standard point out the important features that should be made available to the purchaser, inspector, or other authorities charged with the examination and evaluation of this system. These data should be established by investigation and tests confirmed by a testing laboratory.

A.5.4.1.2 In pre-engineered systems, the factors in 5.4.1.1(1) through (3) are established for specific volume and other conditions given in the manufacturer's listed installation and maintenance manual.

A.5.5.1 Examples of these hazards are deep-fat fryers; charbroilers; upright broilers, griddles, and ranges in kitchens; or wax tanks.

A.5.6 Dry chemical extinguishing agents are considered nontoxic from a physiological point of view. However, as with any finely divided material, they can produce mild irritation effects, especially when used in an enclosed area. In general, the effects are neither serious nor permanent.

For more specific guidance on individual dry chemical extinguishing agent components and their hazards to personnel (threshold limit values), consult the dry chemical manufacturer.

A.5.6.1.1 CAUTION: Hazards to Personnel. The discharge of large amounts of dry chemical can create hazards to personnel such as reduced visibility and temporary breathing difficulty.

A.5.7 See *NFPA 72, National Fire Alarm Code,* for detection, alarm, and control functions for dry chemical extinguishing systems.

A.5.7.1.7 Common exhaust ducts normally are located in concealed areas such that the need for manual discharge of the system might not be readily apparent. It is recommended that the number and location of remote controls, if any, be given careful consideration.

A.5.7.3 If only local alarms are provided, consideration should be given to transmitting these alarms to a constantly attended location.

A.5.8.2 A fully charged reserve unit permanently connected to the system is desirable and can be required by the authority having jurisdiction.

A.5.8.3.3 Listed systems for use at higher temperatures up to 210°F (99°C) or lower temperatures down to –65°F (–54°C) are available from most system manufacturers. Special systems can be specially designed for extreme temperature conditions.

A.5.9.1 The following material provides some of the necessary considerations that must be incorporated when piping a mixture of dry chemical and expellant gas. The flow of the mixture of dry chemical and gas does not strictly follow general hydraulic principles because it is a two-phase flow. The flow characteristics are dependent upon the composition and physical characteristics of the type and make of the dry chemical being used, the type of expellant gas being used, and the design of the equipment being used.

Pre-engineered systems do not need calculations for flow rate, pressure drop, and nozzle pressure, since they have been tested for fire extinguishment with minimum and maximum piping limitations, including length of pipe and number and type of elbows, and minimum and maximum temperature limitations. These limitations have been verified by testing laboratories and are published in the manufacturer's installation manual.

Engineered systems are calculated to show that the proper flow rate and nozzle pressure are obtained using the pressure drop occurring in the piping layout. The necessary charts, graphs, and nozzle pattern information must be obtained from the equipment manufacturer and verified by testing laboratories.

Changes in direction of flow cause separation of expellant gas and dry chemical. To provide proper distribution of dry chemical upon splitting the stream, special attention must be given to the method in which an approach is made to a tee after a change in direction. Certain acceptable methods are shown in Figure A.5.9.1(a) and Figure A.5.9.1(b). Other methods and equipment can be recognized by a testing laboratory in its listings.

A.6.1 Consideration should be given to the elimination of probable sources of reignition because the extinguishing action of a dry chemical flooding system is transient.

A.6.2.2.3 For fires in ordinary combustibles where multipurpose dry chemical should be used for protection, additional dry chemical applied by local application can be needed in order to adequately protect all exposed surfaces.

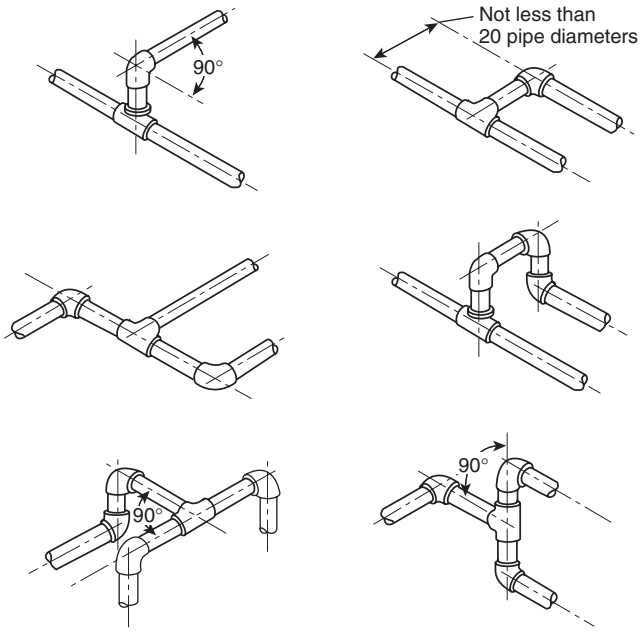

FIGURE A.5.9.1(a) Illustrations of Acceptable Means of Piping into a Tee in a Dry Chemical System.

Copyright National Fire Protection Association
Provided by IHS under license with NFPA
No reproduction or networking permitted without license from IHS
Not for Resale

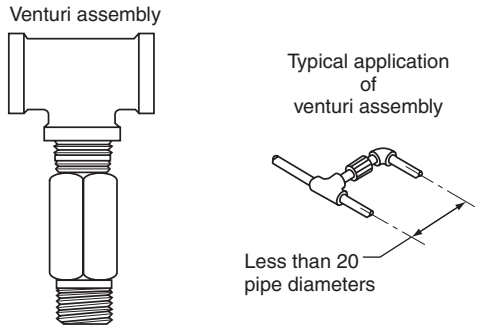

FIGURE A.5.9.1(b) Venturi Assembly.

A.7.1 Examples of hazards that can be successfully protected by local application systems include dip tanks, quenching oil tanks, spray booths, oil-filled electrical transformers, vapor vents, deep-fat fryers, and so on.

A.7.2.1 Protection of the entire hazard can require the combined use of local application and total flooding systems.

A.7.2.3 Examples of areas include areas subject to spillage, leakage, dripping, splashing, or condensation. Examples of associated materials include freshly coated stock, drainboards, hoods, ducts, etc.

A.7.2.4 CAUTION: Consideration should be given to the effects of wind or other stray air currents on the dry chemical discharge.

A.8.2.1 In general, hand hose line stations should be located so that they are not exposed to the hazard.

A.8.3.1 An unusually low flow rate will cause the dry chemical to separate from the expellant gas while in the pipe or hose, or both, resulting in uneven flow from the nozzle.

A.8.3.3 Operation of hand hose line systems depends on manual actuation and manipulation of a discharge nozzle. Speed and simplicity of operation are essential.

A.9.1.1 Pre-engineered systems can have special limitations, flow rates, and methods of application that differ from the requirements specified in Chapters 4 through 8 of this standard.

A.9.3.4 One example of each acceptable method for the protection of common exhaust ducts are presented in the figures in A.9.3.4.1(1) and A.9.3.4.1(2). These figures are not intended to be all-inclusive. For additional guidance consult the system manufacturer.

A.9.3.4.1(1) Separate cooking appliance, hood, and branch duct systems are interconnected so that they operate simultaneously.

Scenario: A fire is detected by System A. System A, protecting cooking appliances, a hood, and a branch duct, is operated. Simultaneously, Systems B, C, D, and E are also actuated. Shutdown of all appliances is in accordance with 9.3.5. *[See Figure A.9.3.4.1(1).]*

A.9.3.4.1(2) Simultaneous operation of a single cooking appliance, hood or branch duct system and the system protecting the entire common exhaust duct.

Scenario No. 1: System 1 protecting the entire common exhaust duct is separate from Systems A, B, C, D, and E. A fire is detected in System A. System A and System 1 are operated simultaneously. Shutdown of all appliances protected by systems A, B, C, D, and E is in accordance with 9.3.5. *[See Figure A.9.3.4.1(2)(a).]*

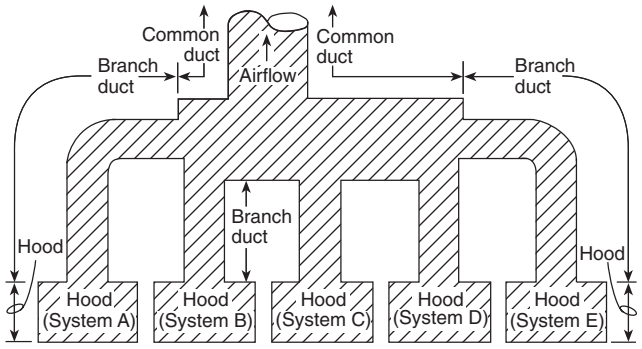

FIGURE A.9.3.4.1(1) Simultaneous Operation of All Systems.

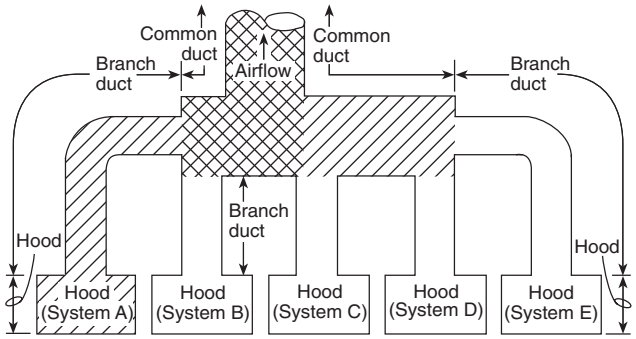

FIGURE A.9.3.4.1(2)(a) Simultaneous Operation of a Single Cooking Appliance, Hood or Branch Duct System and the System Protecting the Common Duct.

Scenario No. 2: System E also provides protection for the entire common exhaust duct. A fire is detected in System C. System C and System E operate simultaneously. Shutdown of all appliances protected by Systems A, B, C, D, and E is in accordance with 9.3.5. *[See Figure A.9.3.4.1(2)(b).]*

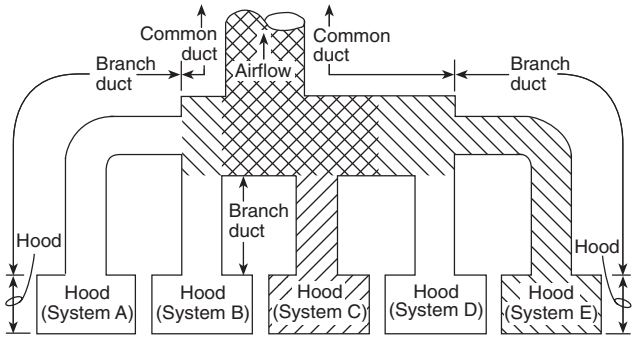

FIGURE A.9.3.4.1(2)(b) Simultaneous Operation of Two Systems in Which One Also Provides Common Duct Protection.

Scenario No. 3: System E also provides protection for the entire common exhaust duct. A fire detected in System E will result in the actuation of System E only. Shutdown of all appli-

Copyright National Fire Protection Association
Provided by IHS under license with NFPA
No reproduction or networking permitted without license from IHS
Not for Resale

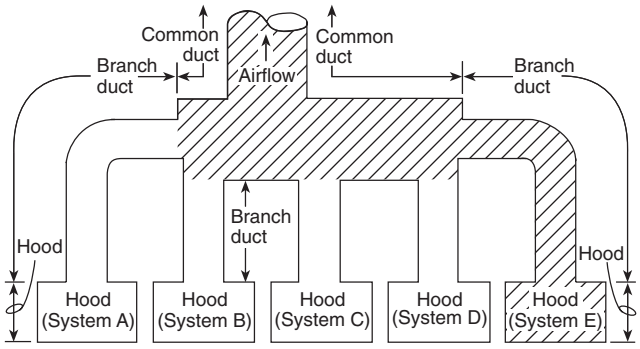

FIGURE A.9.3.4.1(2)(c) Independent Operation of a System That Protects a Hood and the Common Duct.

ances protected by Systems A, B, C, D, and E is in accordance with 9.3.5. *[See Figure A.9.3.4.1(2)(c).]*

A.9.3.5 Exhaust fans do not need to be shut down or to have dampers closed upon system actuation, since the systems have been tested under both zero and high velocity flow conditions.

A.9.3.5.2 The fire-extinguishing systems have been tested under both zero and high velocity and therefore the exhaust fans and dampers need not shut down upon actuation of the fire-extinguishing systems.

A.9.7.2 It is recommended that system design and installation personnel be certified in accordance with the manufacturer's requirements. It is standard industry practice to provide expiration dates on training certificates.

A.9.8 Suitable means should be provided to contain a fuel spill within the protected area. See NFPA 30, *Flammable and Combustible Liquids Code*.

A.9.9.1 For information on mobile surface mining equipment, see NFPA 121, *Standard on Fire Protection for Self-Propelled and Mobile Surface Mining Equipment*.

A.11.1.3 It is recommended that system maintenance personnel be certified in accordance with the manufacturer's requirements. It is standard industry practice to provide expiration dates on training certificates.

A.11.3.1 Regular service contracts are recommended.

A.11.3.1.1(3) The following methods can be used for verifying that the piping is not obstructed:

(1) Disassembly of all piping
(2) Purging of piping with nitrogen or dry air
(3) Conducting a full or partial discharge test
(4) Utilizing methods recommended by the manufacturer

A.11.3.1.4 A discharge of the dry chemical normally is not part of this test.

A.11.3.1.7 Under special circumstances or when local requirements are in effect, additional information can be desirable or required.

A.11.3.2 The date of manufacture marked on fusible metal alloy sensing elements does not limit when they can be used. These devices have unlimited shelf life. The intent of 11.3.2 is to require replacement of fusible metal alloy sensing elements that have been installed for up to 1 year in environments subjecting them to contaminant-loading, such as grease in restaurant hoods and ducts, that could adversely affect their proper operation.

A.11.5.1 Regarding the containers in Exception No. 3, DOT- or TC-marked cylinders can be required to be subjected to more frequent testing.

A.11.5.2.3 DOT- or TC-marked containers installed in a system that is not under the jurisdiction of DOT or TC are not required to follow DOT or TC requirements as long as they remain in operation.

Annex B Informational References

B.1 Referenced Publications. The following documents or portions thereof are referenced within this standard for informational purposes only and are thus not part of the requirements of this document unless also listed in Chapter 2.

B.1.1 NFPA Publications. National Fire Protection Association, 1 Batterymarch Park, P.O. Box 9101, Quincy, MA 02269-9101.

NFPA 10, *Standard for Portable Fire Extinguishers,* 2002 edition.

NFPA 30, *Flammable and Combustible Liquids Code,* 2000 edition.

NFPA 72®, National Fire Alarm Code ®, 2002 edition.

NFPA 121, *Standard on Fire Protection for Self-Propelled and Mobile Surface Mining Equipment,* 2001 edition.

B.1.2 Other Publications.

B.1.2.1 ASME Publication. American Society of Mechanical Engineers, Three Park Avenue, New York, NY 10016-5990.

ANSI/ASME B31.1, *Power Piping* , 1998 edition.

B.1.2.2 ASTM Publication. American Society for Testing and Materials, 100 Barr Harbor Drive, West Conshohocken, PA 19428-2959.

IEEE/ASTM SI 10, *Standard for Use of the International System of Units (SI): The Modern Metric System,* 1997.

B.1.2.3 FSSA Publication. Fire Suppression Systems Association, 5024-R Campbell Boulevard, Baltimore, MD 21236-5974.

FSSA *Pipe Design Handbook for Use with Special Hazard Fire Suppression Systems*, first edition, June 2001.

B.2 Informational References.

B.2.1 U.S. Government Publication. U.S. Government Printing Office, Washington, DC 20402. The following is additional reference material.

Title 49, *Code of Federal Regulations,* Parts 170-190.

B.3 References for Extracts. The following documents are listed here to provide reference information, including title and edition, for extracts given throughout this standard as indicated by a reference in brackets [ ] following a section or paragraph. These documents are not a part of the requirements of this document unless also listed in Chapter 2 for other reasons.

NFPA 25, *Standard for the Inspection, Testing, and Maintenance of Water-Based Fire Protection Systems*, 2002 edition.

NFPA 72, National Fire Alarm Code, 2002 edition.

NFPA 122, *Standard for Fire Prevention and Control in Underground Metal and Nonmetal Mines*, 2000 edition.

NFPA 820, *Standard for Fire Protection in Wastewater Treatment and Collection Facilities*, 1999 edition.

NFPA 2001, *Standard on Clean Agent Fire Extinguishing Systems*, 2000 edition.

--`,,`-`-`,,`,,`,`,,`---

Copyright National Fire Protection Association
Provided by IHS under license with NFPA
No reproduction or networking permitted without license from IHS
Not for Resale

Index

© 2002 National Fire Protection Association. All Rights Reserved.

The copyright in this index is separate and distinct from the copyright in the document that it indexes. The licensing provisions set forth for the document are not applicable to this index. This index may not be reproduced in whole or in part by any means without the express written permission of NFPA.

-A-

Acceptance tests 10.1.4, 10.4.3
Actuation, methods of ..... 5.7.1, A.5.7.1.7; *see also* Manual actuators
Alarms
Fire, connection to 5.7.4
Maintenance ..... 11.3.1.1(2), 11.3.1.4
Mobile equipment, systems for protection of 9.9.9
Pre-engineered systems ..... 9.5 to 9.6
System operation 5.7.3, A.5.7.3
Application rate 6.2.2.5, 7.2.7
Approvals 10.3, 10.4
Approved (definition) 3.2.1, A.3.2.1
Authority having jurisdiction (definition) 3.2.2, A.3.2.2
Automatic operation ..... 5.7.1; *see also* Shutoff devices
Definition 3.3.15.1
Pre-engineered systems 9.3.2.1, 9.8.4
Auxiliary equipment ..... 10.1.3.1.1, 11.3.1.1(2), 11.5.1(2), 11.5.2
Definition 3.3.1

-B-

Blowoff caps ..... 4.3.1.5, 11.2.1.1(7)
Branch ducts ..... 9.3.4.1.1, 9.3.4.1.2, A.9.3.4.1(1), A.9.3.4.1(2)
Definition 3.3.6.1

-C-

Caking ..... 11.3.1.1(4)
Definition 3.3.2
Calculation and design 10.2.3
Definition 3.3.3, A.3.3.3
Carbon dioxide as expellant gas 4.7.1, 5.8.3.4, 11.1.5.1.3
Chases, fire 11.1.6
Clearances 5.6.2
Definition 3.3.4
Coated surfaces, treatment of 7.2.6
Combustible materials ..... 5.1.1, 5.1.2(2), 5.5.3, A.5.1.1, A.6.2.2.3; *see also* Flammable and combustible gases; Flammable and combustible liquids
Common ducts 9.3.4, A.9.3.4
Definition 3.3.6.2
Manual actuators for 5.7.1.8, A.5.7.1.7
Components of system ..... Chap. 4
Containers
Hydrostatic testing of 11.3.1.3, 11.5, 11.5.1, 11.5.2
Inspection and maintenance ..... 5.8.3.6, 11.3.1.1(2), 11.3.1.3
Location of 5.8.3
Mobile equipment, systems for protection of 9.9.6
Safety caps 11.1.1
Storage 4.9
Conveyors, automatic shutoff of 5.5.3
Cooking equipment ..... *see* Restaurant hood, duct, and cooking equipment systems

-D-

Deep-seated fires ..... 5.1.2(3), 6.1.5
Definitions ..... Chap. 3
Detectors and detection systems 4.1, 5.7.1.11
Maintenance ..... 11.3.1.1(2)
Mobile equipment 9.9.1, 9.9.3
Restaurant systems ..... 9.3.1.1 to 9.3.1.3, 9.3.4.1.1, 9.3.4.1.2, 9.6.2
Vehicle fueling service stations 9.8.4
Discharge, duration of
Hand hose line systems 8.3.1
Local application systems 7.2.7
Discharge delay device 9.9.9
Discharge nozzles 4.3
Blowoff caps ..... 4.3.1.5, 11.2.1.1(7)
Definition 3.3.5
Flexible hoses, connection to 5.9.2.6
Maintenance ..... 11.3.1.1(2)
Manual actuation of A.8.3.3
Mobile equipment systems 9.9.5
Placement of ..... 5.4.1.1(3), 5.9.2.4 to 5.9.2.6, 7.2.5, A.5.4.1.1
Pressure A.5.9.1
Quantities of 5.4.2
Selection of 5.9.2
Turret 9.10.5, 9.10.7
Vehicle fueling service station systems 9.8.6
Dry chemical ..... *see also* Multipurpose dry chemical
Containers ..... *see* Containers
Corrosivity of A.5.1.2.1
Definition 3.3.7
Flow rate ..... 5.4.1.1(2), 6.2.2.3, 8.3.1, A.1.1, A.5.4.1.1, A.5.9.1, A.8.3.1
Hand hose lines, for 8.1.1, 8.1.2, 8.3
Hazards to personnel of 5.6, A.5.6
Leakage 6.2.2
Maintenance ..... 11.3.1.1(4), 11.3.1.2
Quantity 5.8.1, 6.2.2.3, 6.2.2.4, 7.2.7, 8.3.1, A.5.4.1.1
Requirements and distribution 5.4, A.5.4.1.1
Reserve supply 5.8.2, A.5.8.2
Residual deposits of 5.1.2.2, A.5.1.2.1
Supplemental 6.2.2.6
Types of 4.6, A.4.6.1
Changing type used 4.6.1
Mixing types of 4.6.3
Dry chemical system (definition) 3.4.1
Ducts ..... 11.1.6; *see also* Branch ducts; Common ducts; Restaurant hood, duct, and cooking equipment systems

-E-

Electrical wiring and equipment
Dry chemical system, as part of 4.8
Use of dry chemicals on ..... 5.1.1(4), 5.1.2.1, 5.1.2.2
Electronic equipment 5.1.2.1, 5.1.2.2
Enclosure, total flooding system 6.2.1
Engineered systems ..... 6.2.2.5 to 6.2.2.6, A.5.9.1
Definition 3.4.2
Plans 10.1.2.1
Pressure drop 5.9.2.3
Equipment to be protected, list of 5.1.1
Equivalency to standard 1.4
Expellant gas 4.7
Assemblies, location of 5.8.3, 9.9.6, A.5.8.3.3
Containers ..... 11.3.1.1(2)
Definition 3.3.8
Dry chemical separation from A.8.3.1
Reserve supply 5.8.2, A.5.8.2
Shutoff devices operated by 5.5.6.1

-F-

Fittings 4.5, 5.9.1, 9.9.4, A.5.9.1

Copyright National Fire Protection Association
Provided by IHS under license with NFPA
No reproduction or networking permitted without license from IHS
Not for Resale

Fixed temperature sensing elements 11.3.2, 11.3.3, A.11.3.2
Flammable and combustible gases ..... 5.1.1(2), A.5.1.1, A.5.1.1(2)
Local application systems for 7.1.1, A.7.1
Shutoff of fuel or power 5.5.1, 5.5.2
Flammable and combustible liquids ..... 5.1.1(1), A.5.1.1(1)
Local application systems for 7.1.1, 7.2.5, A.7.1
Shutoff of fuel or power 5.5.2
Flexible hose .....*see* Hose, flexible
Foam-compatible dry chemicals A.4.6.1
Fusible links ..... 9.3.1.1 to 9.3.1.3, 9.3.4.1.1, 9.3.4.1.2, 11.3.2, A.11.3.2

-G-

Gas fires .....*see* Flammable and combustible gases

-H-

Hand hose line systems ..... 4.2, Chap. 8
Definition 3.4.3
Hydrostatic testing of ..... 11.5.1(3), 11.5.2
Maintenance ..... 11.3.1.1(2)
Manual actuators for 5.7.1.3
Marking of A.4.2.1
Nozzles ..... 4.2.2; *see also* Discharge nozzles
Pre-engineered systems 9.2, 9.10
Simultaneous use of 8.3.2
Storage 4.2.3
Hazards
List of 5.1.1, A.5.1.1
Multiple hazards, system protecting 5.3
Multiple systems protecting common hazard 5.2, 9.8.1
Personnel 5.6, A.5.6
Specifications .....*see* Specifications, system
Hoods .....*see* Restaurant hood, duct, and cooking equipment systems
Hose, flexible ..... 4.5.3, 5.9.2.6, 9.9.4, A.4.5.3; *see also* Hand hose line systems
Hose nozzles ..... 4.2.2; *see also* Discharge nozzles
Hydrostatic testing 11.5

-I-

Indicators 4.10
Definition 3.3.9
Pre-engineered systems 9.5.1
Inspections 11.1.4
Containers 5.8.3.6
Definition 3.3.10
Ducts, access to 11.1.6
Owner's inspection 11.2
Installations, approvals of 10.4

-L-

Labeled (definition) 3.2.3
Leakage, dry chemical 6.2.2
Limitations of system 5.1.2
Liquids .....*see* Flammable and combustible liquids
Listed (definition) 3.2.4, A.3.2.4
Local application systems ..... Chap. 7, A.6.2.2.3
Definition 3.4.4
Hazard specifications 7.2, A.7.2
Location 7.2.4, A.7.2.4
Personnel safety 5.6.1.1, A.5.6.1.1
Pre-engineered systems 9.2
Lumps A.4.6.3
Definition 3.3.11

-M-

Maintenance 11.1.3, 11.1.4, 11.3, A.11.3
Containers 5.8.3.6
Definition 3.3.12
Ducts, access to 11.1.6
Service contracts for A.11.3.1
Manual actuators 4.4.2, 5.7.1
Hand hose line systems 8.2.3, 9.10.4, A.8.3.3
Inspection of ..... 11.2.1.1(2)
Mobile equipment systems ..... 9.9.3.1, 9.9.6 to 9.9.8
Pre-engineered systems 9.4
Remote actuators ..... 4.4.2.4, 5.7.1.8 to 5.7.1.10, 9.8.5, A.5.7.1.7
Vehicle fueling service station systems 9.8.5
Manual operation 4.4.3, 5.7.1.1, 9.10.4
Definition 3.3.15.2
Manuals .....*see* Manufacturer's listed installation and maintenance manuals; Owner's manuals
Manufacturer's listed installation and maintenance manuals ..... 9.8.4.1, 9.9.2 to 9.9.5, 9.10.2, 9.10.3, 10.5, 11.1.3, 11.1.4, 11.2.1, 11.3.1, 11.4.2
Definition 3.3.13.1, A.3.3.13.1
Markings, identification
Discharge nozzles 4.3.1.4
Hose A.4.2.1
Maintenance, performance of 11.3.1.7, 11.3.2.2, 11.3.2.3
Manual actuators, remote 4.4.2.4
Operating devices 4.4.1.2
Measurement, units of 1.5
Mobile equipment, systems for protection of 9.9, A.9.9.1
Multiple systems protecting common hazard 5.2, 9.8.1
Multipurpose dry chemical A.1.1, A.4.6.1
Deep-seated fires protected by 6.1.5
Definition 3.3.7.1
Deposits on equipment from 5.1.2.1, A.5.1.2.1

-N-

Nitrogen as expellant gas 4.7.2, 5.8.3.3, 11.1.5.1.3, A.5.8.3.3
Nozzles
Discharge .....*see* Discharge nozzles
Hand hose 4.2.2

-O-

Openings
Closing of 6.2.2.1
Unclosable ..... 6.1.2 to 6.1.4, 6.2.1.1 to 6.2.1.4, 6.2.2.6
Operating devices ..... 4.4, 5.7.1.6; *see also* Alarms; Manual actuators; Shutoff devices; Valves
Definition 3.3.14
Operation and control of systems ..... 5.7, A.5.7; *see also* Automatic operation; Manual operation
Owner's manuals 10.5, 11.1.4, 11.2.1
Definition 3.3.13.2

-P-

Personnel
Qualifications 1.6, 11.1.3, A.1.6
Safety of 5.6, A.5.1.1, A.5.6
Trained 8.4, 11.1.3
Definition 3.3.20
Pipes and piping ..... 4.5, A.4.5; *see also* Hose, flexible
Arrangement and installation of 5.9.1, A.5.9.1
Definition 3.3.16
Maintenance ..... 11.3.1.1(2), 11.3.1.1(3), A.11.3.1.1(3)
Pressure drop 5.9.2.3, A.5.9.1
Size 5.9.2
Tee, piping into ..... Fig. A.5.9.1(a)
Venturi assembly ..... Fig. A.5.9.1(b)
Plans 10.2, 10.3
Potassium, dry chemicals based on salts of A.4.6.1, A.5.1.2.1
Pre-engineered systems ..... 6.1.4, 6.2.2.6, Chap. 9, A.5.9.1
Definition 3.4.5, A.3.4.5
Hand hose line systems 9.10
Manual actuation 9.4

Copyright National Fire Protection Association
Provided by IHS under license with NFPA
No reproduction or networking permitted without license from IHS
Not for Resale

Mobile equipment systems 9.9, A.9.9.1
Pipes 4.5.1.2, 5.9.2.2
Plans 10.1.2
Restaurant hood, duct, and cooking equipment systems 6.2.2.6.5, 9.3, A.9.3
Review and certification of systems 9.7, A.9.7.2
Shutoff devices 9.3.4.2, 9.3.5, 9.8.3, 9.10.5, A.9.3.5
Supervision 9.6
System annunciation requirements 9.5
Types of systems 9.2
Uses 9.1, A.9.1.1
Vehicle fueling service station systems 9.8, A.9.8
Purpose of standard 1.2

-Q-

Qualifications, personnel 1.6, 11.1.3, A.1.6

-R-

Ready condition 4.10
Recharge 4.10, 5.8.2, 11.4
Agents 11.1.5
Definition 3.3.17
Instructions for 11.1.3, 11.1.4
Mobile equipment systems 9.9.10
Storage of supplies 11.1.2
Trained personnel for 11.1.3, A.11.1.3
References ..... Chap. 2, Annex B
Reignition, sources of A.6.1
Restaurant hood, duct, and cooking equipment systems .... 5.1.1(7); *see also* Common ducts
Annunciation requirements 9.5
Manual actuation 9.4
Pre-engineered systems 6.2.2.6.5, 9.3, A.9.3
Review and certification 9.7, A.9.7.2
Shutoff of fuel or power 9.3.4.2, 9.3.5, 9.6.3, A.9.3.5
Supervision 9.6
Retroactivity of standard 1.3

-S-

Scope of standard 1.1, A.1.1
Selector valves 4.4.4.2, 4.4.4.3, 5.8.2.1
Definition 3.3.18
Shall (definition) 3.2.5
Shallow solids, local application systems for 7.1.1, A.7.1
Should (definition) 3.2.6
Shutoff devices 5.5
Gas systems A.5.1.1
Hoses 4.2.2.1
Manual activators 4.4.3
Pre-engineered systems ..... *see* Pre-engineered systems
Signals 5.7.3
Definition 3.3.19
Maintenance ..... 11.3.1.1(2), 11.3.1.4
Pre-engineered systems 9.5.2
SI units 1.5
Smoldering fires 6.1.5
Sodium bicarbonate-based dry chemicals 6.1.5.1, A.4.6.1, A.5.1.2.1
Specifications, system 10.1
Local application systems 7.2, A.7.2
Total flooding systems 6.2
Standard (definition) 3.2.7
Storage
Containers 4.9
Hand hose line systems 4.2.3
Recharging supplies 11.1.2
Supervision of system 5.7.2, 9.6
System requirements ..... Chap. 5; *see also* Engineered systems; Hand hose line systems; Local application systems; Pre-engineered systems; Total flooding systems
Dry chemical and expellant gas supply 5.8, A.5.8.2
Dry chemical requirements 5.4, A.5.4.1.1, A.5.4.1.2
Dry chemical system (definition) 3.4.1
Multiple systems protecting common hazard 5.2, 9.8.1
Operation and control of systems 5.7, A.5.7
Personnel safety 5.6, A.5.1.1, A.5.6, A.5.6.1.1
Pipes and piping 5.9, A.5.9.1
Special considerations 5.5, A.5.5.1
Two or more hazards, systems protecting 5.3

-T-

Tests
Acceptance 10.1.4, 10.4.3
Hydrostatic 11.5
Textile operations ..... 5.1.1(5), 5.1.2.1
Total flooding systems ..... Chap. 6, A.7.2.1
Definition 3.4.6
Hazard specifications 6.2, A.6.2.2.3
Personnel safety 5.6.1.1, A.5.6.1.1
Pre-engineered systems 6.1.4, 9.2
Trained ..... *see* Personnel, Trained
Transport Canada (TC)
Containers 4.9.1, 11.5.2.3, A.11.5.1, A.11.5.2.3
Definition 3.3.21

-U-

U. S. Department of Transportation (DOT)
Containers 4.9.1, 11.5.1, 11.5.2.3, A.11.5.1, A.11.5.2.3
Definition 3.3.22
Units of measurement 1.5

-V-

Valves ..... 4.4.4, 8.3.3.1; *see also* Selector valves
Vehicle fueling service station systems 9.8, A.9.8
Ventilating systems 6.2.2.2, 6.2.2.6.3
Volume to be protected, allowances in 6.2.2.4

-W-

Wiring 4.8

Copyright National Fire Protection Association
Provided by IHS under license with NFPA
No reproduction or networking permitted without license from IHS
Not for Resale