NFPA 16

Standard for the Installation of Foam-Water Sprinkler and Foam-Water Spray Systems

2007 Edition

NFPA, 1 Batterymarch Park, Quincy, MA 02169-7471
An International Codes and Standards Organization

Copyright National Fire Protection Association
Provided by IHS under license with NFPA
No reproduction or networking permitted without license from IHS

Not for Resale

IMPORTANT NOTICES AND DISCLAIMERS CONCERNING NFPA DOCUMENTS

NOTICE AND DISCLAIMER OF LIABILITY CONCERNING THE USE OF NFPA DOCUMENTS

NFPA codes, standards, recommended practices, and guides, of which the document contained herein is one, are developed through a consensus standards development process approved by the American National Standards Institute. This process brings together volunteers representing varied viewpoints and interests to achieve consensus on fire and other safety issues. While the NFPA administers the process and establishes rules to promote fairness in the development of consensus, it does not independently test, evaluate, or verify the accuracy of any information or the soundness of any judgments contained in its codes and standards.

The NFPA disclaims liability for any personal injury, property or other damages of any nature whatsoever, whether special, indirect, consequential or compensatory, directly or indirectly resulting from the publication, use of, or reliance on this document. The NFPA also makes no guaranty or warranty as to the accuracy or completeness of any information published herein.

In issuing and making this document available, the NFPA is not undertaking to render professional or other services for or on behalf of any person or entity. Nor is the NFPA undertaking to perform any duty owed by any person or entity to someone else. Anyone using this document should rely on his or her own independent judgment or, as appropriate, seek the advice of a competent professional in determining the exercise of reasonable care in any given circumstances.

The NFPA has no power, nor does it undertake, to police or enforce compliance with the contents of this document. Nor does the NFPA list, certify, test or inspect products, designs, or installations for compliance with this document. Any certification or other statement of compliance with the requirements of this document shall not be attributable to the NFPA and is solely the responsibility of the certifier or maker of the statement.

--`,,```,,,,````-`-`,,`,,`,`,,`---

Copyright National Fire Protection Association
Provided by IHS under license with NFPA
No reproduction or networking permitted without license from IHS
Not for Resale

ADDITIONAL NOTICES AND DISCLAIMERS

Updating of NFPA Documents

Users of NFPA codes, standards, recommended practices, and guides should be aware that these documents may be superseded at any time by the issuance of new editions or may be amended from time to time through the issuance of Tentative Interim Amendments. An official NFPA document at any point in time consists of the current edition of the document together with any Tentative Interim Amendments and any Errata then in effect. In order to determine whether a given document is the current edition and whether it has been amended through the issuance of Tentative Interim Amendments or corrected through the issuance of Errata, consult appropriate NFPA publications such as the National Fire Codes® Subscription Service, visit the NFPA website at www.nfpa.org, or contact the NFPA at the address listed below.

Interpretations of NFPA Documents

A statement, written or oral, that is not processed in accordance with Section 6 of the Regulations Governing Committee Projects shall not be considered the official position of NFPA or any of its Committees and shall not be considered to be, nor be relied upon as, a Formal Interpretation.

Patents

The NFPA does not take any position with respect to the validity of any patent rights asserted in connection with any items which are mentioned in or are the subject of NFPA codes, standards, recommended practices, and guides, and the NFPA disclaims liability for the infringement of any patent resulting from the use of or reliance on these documents. Users of these documents are expressly advised that determination of the validity of any such patent rights, and the risk of infringement of such rights, is entirely their own responsibility.

NFPA adheres to applicable policies of the American National Standards Institute with respect to patents. For further information contact the NFPA at the address listed below.

Law and Regulations

Users of these documents should consult applicable federal, state, and local laws and regulations. NFPA does not, by the publication of its codes, standards, recommended practices, and guides, intend to urge action that is not in compliance with applicable laws, and these documents may not be construed as doing so.

Copyrights

This document is copyrighted by the NFPA. It is made available for a wide variety of both public and private uses. These include both use, by reference, in laws and regulations, and use in private self-regulation, standardization, and the promotion of safe practices and methods. By making this document available for use and adoption by public authorities and private users, the NFPA does not waive any rights in copyright to this document.

Use of NFPA documents for regulatory purposes should be accomplished through adoption by reference. The term “adoption by reference” means the citing of title, edition, and publishing information only. Any deletions, additions, and changes desired by the adopting authority should be noted separately in the adopting instrument. In order to assist NFPA in following the uses made of its documents, adopting authorities are requested to notify the NFPA (Attention: Secretary, Standards Council) in writing of such use. For technical assistance and questions concerning adoption of NFPA documents, contact NFPA at the address below.

For Further Information

All questions or other communications relating to NFPA codes, standards, recommended practices, and guides and all requests for information on NFPA procedures governing its codes and standards development process, including information on the procedures for requesting Formal Interpretations, for proposing Tentative Interim Amendments, and for proposing revisions to NFPA documents during regular revision cycles, should be sent to NFPA headquarters, addressed to the attention of the Secretary, Standards Council, NFPA, 1 Batterymarch Park, P.O. Box 9101, Quincy, MA 02269-9101.

For more information about NFPA, visit the NFPA website at www.nfpa.org.

Copyright National Fire Protection Association
Provided by IHS under license with NFPA
No reproduction or networking permitted without license from IHS
Not for Resale

Copyright © 2007 National Fire Protection Association. All Rights Reserved.

NFPA 16

Standard for the

Installation of Foam-Water Sprinkler and Foam-Water Spray Systems

2007 Edition

This edition of NFPA 16, *Standard for the Installation of Foam-Water Sprinkler and Foam-Water Spray Systems,* was prepared by the Technical Committee on Foam-Water Sprinklers and released by the Technical Correlating Committee on Automatic Sprinkler Systems. It was issued by the Standards Council on December 1, 2006, with an effective date of December 20, 2006, and supersedes all previous editions.

This edition of NFPA 16 was approved as an American National Standard on December 20, 2006.

Origin and Development of NFPA 16

The first standard involving foam-water sprinkler systems was published in 1954 by the National Board of Fire Underwriters (now American Insurance Association) and was titled *Standard for Combined Foam- and Water-Spray Systems.* The NFPA Technical Committee on Foam-Water Sprinklers was established in 1959 with assistance from the NBFU. The first edition of this standard was published in 1962.

Various updates to the standard were completed in 1968, 1974, 1988, and 1990. Changes were made to recognize the use of new foam concentrates and to improve the language and format of the document.

The 1995 edition included clarification of the scope of the standard, improvements to the hydraulic design criteria, and recognition of a fourth proportioning method.

The 1999 edition combined NFPA 16 and NFPA 16A into one comprehensive document. Numerous editorial changes also were instituted.

The 2003 edition was reformatted to conform to the *Manual of Style for NFPA Technical Committee Documents* and was revised to recognize the use of different types and brands of foam concentrate.

The 2007 edition of the standard has been revised to coordinate definitions and requirements for fire department connections and underground pipe with those of other documents.

--`,,```,,,,````-`-`,,`,,`,`,,`---
Copyright National Fire Protection Association
Provided by IHS under license with NFPA
No reproduction or networking permitted without license from IHS
Not for Resale

Technical Correlating Committee on Automatic Sprinkler Systems (AUT-AAC)

John G. O'Neill, *Chair*
The Protection Engineering Group, PC, VA [SE]

Christian Dubay, *Nonvoting Secretary*
National Fire Protection Association, MA

José R. Baz, JRB Associates Group Incorporated, FL [M]
Rep. NFPA Latin American Section
Kerry M. Bell, Underwriters Laboratories Incorporated, IL [RT]
Russell P. Fleming, National Fire Sprinkler Association, NY [M]
Scott T. Franson, The Viking Corporation, MI [M]
Michael J. Friedman, Friedman Consulting, Incorporated, MD [SE]
Raymond A. Grill, Arup Fire, DC [SE]
James B. Harmes, Grand Blanc Fire Department, MI [E]
Rep. International Association of Fire Chiefs
Luke Hilton, Liberty Mutual Property, NC [I]
Alex Hoffman, Viking Fire Protection Incorporated, Canada [IM]
Rep. Canadian Automatic Sprinkler Association
Roland J. Huggins, American Fire Sprinkler Association, Incorporated, TX [IM]
Sultan M. Javeri, SC Engineering, France [IM]
Andrew Kim, National Research Council of Canada, Canada [RT]
Joe W. Noble, Clark County Fire Department, NV [E]
Rep. International Fire Marshals Association
Eric Packard, Local 669 JATC Education Fund, MD [L]
Rep. United Association of Journeymen and Apprentices of the Plumbing & Pipe Fitting Industry of the United States & Canada
Chester W. Schirmer, Schirmer Engineering Corporation, NC [I]
Robert D. Spaulding, FM Global, MA [I]
Lynn K. Underwood, Axis US Property, IL [I]

Alternates

Donald "Don" D. Becker, RJC & Associates, Incorporated, MO [IM]
(Alt. to R. J. Huggins)
Thomas C. Brown, The RJA Group, Incorporated, MD [SE]
(Alt. to R. A. Grill)
George Capko, Jr., FM Global, MA [I]
(Alt. to R. D. Spaulding)
Kenneth E. Isman, National Fire Sprinkler Association, NY [M]
(Alt. to R. P. Fleming)
George E. Laverick, Underwriters Laboratories Incorporated, IL [RT]
(Alt. to K. M. Bell)
Garner A. Palenske, Schirmer Engineering Corporation, CA [I]
(Alt. to C. W. Schirmer)
Donato A. Pirro, Electro Sistemas De Panama. S.A., Panama [M]
(Alt. to J. R. Baz)
J. Michael Thompson, The Protection Engineering Group, PC, VA [SE]
(Alt. to J. G. O'Neill)

Nonvoting

Antonio C. M. Braga, FM Global, CA [I]
Rep. TC on Hanging & Bracing of Water-Based Systems
Edward K. Budnick, Hughes Associates, Incorporated, MD [SE]
Rep. TC on Sprinkler System Discharge Criteria
Robert M. Gagnon, Gagnon Engineering, MD [SE]
Rep. TC on Foam-Water Sprinklers
William E. Koffel, Koffel Associates, Incorporated, MD [SE]
Rep. Safety to Life Correlating Committee
Kenneth W. Linder, GE Insurance Solutions, CT [I]
Rep. TC on Sprinkler System Installation Criteria
Daniel Madrzykowski, U.S. National Institute of Standards & Technology, MD [RT]
Rep. TC on Residential Sprinkler Systems
Bill Sheppard, General Motors Corporation, MI [U]
Rep. TC on Private Water Supply Piping Systems
John J. Walsh, UA Joint Apprenticeship Committee, MD [SE]
(Member Emeritus)

Christian Dubay, NFPA Staff Liaison

This list represents the membership at the time the Committee was balloted on the final text of this edition. Since that time, changes in the membership may have occurred. A key to classifications is found at the back of the document.

NOTE: Membership on a committee shall not in and of itself constitute an endorsement of the Association or any document developed by the committee on which the member serves.

Committee Scope: This Committee shall have overall responsibility for documents that pertain to the criteria for the design and installation of automatic, open and foam-water sprinkler systems including the character and adequacy of water supplies, and the selection of sprinklers, piping, valves, and all materials and accessories. This Committee does not cover the installation of tanks and towers, nor the installation, maintenance, and use of central station, proprietary, auxiliary, and local signaling systems for watchmen, fire alarm, supervisory service, or the design of fire department hose connections.

Copyright National Fire Protection Association
Provided by IHS under license with NFPA
No reproduction or networking permitted without license from IHS
Not for Resale

Technical Committee on Foam-Water Sprinklers (AUT-FOW)

Robert M. Gagnon, *Chair*
Gagnon Engineering, MD [SE]

Terry L. Victor, *Secretary*
Tyco/SimplexGrinnell, MD [M]

Michael E. Aaron, The RJA Group, Incorporated, IL [SE]
Tracey D. Bellamy, TVA Fire and Life Safety, Incorporated, GA [SE]
William F. Blackmon, Pirelli North America, TN [U]
Pascal Caron, Montreal Fire Department, Canada [E]
Bruce G. Carpenter, AERO Automatic Sprinkler Company, AZ [IM]
Kevin F. Carrier, Miami-Dade County, FL [E]
David L. Dixon, Security Fire Protection, TN [IM]
Rep. National Fire Sprinkler Association
Larry J. Edwards, F. E. Moran, Incorporated, IL [IM]
Richard Greenberg, New Jersey Department of Community Affairs, NJ [E]
Robert Lee Holcombe, III, GE Insurance Solutions, SC [I]
Alan L. Holder, Louisiana Power & Light Company, LA [U]
Rep. Edison Electric Institute
Gene L. Hortz, Rohm and Haas Company, PA [U]
Kirk W. Humbrecht, Phoenix Fire Systems, Incorporated, IL [IM]
Rep. Fire Suppression Systems Association
Eldon D. Jackson, The Viking Corporation, MI [M]
Rep. National Fire Sprinkler Association
Kevin P. Kuntz, Marsh USA Incorporated, NJ [I]
Scott L. Maxwell, Fireman's Fund Insurance Company, CO [I]
Robert C. Merritt, FM Global, MA [I]
Bob D. Morgan, Fort Worth Fire Department, TX [E]
Randy R. Nelson, PE, VFS Fire & Security Services, CA [IM]
Rep. American Fire Sprinkler Association
Thomas A. Noble, City of Henderson Building & Fire Safety, NV [E]
Maurice M. Pilette, Mechanical Designs Limited, MA [SE]
Tommy L. Preuett, Ellicott City, MD [L]
Rep. United Association of Journeymen & Apprentices of the Plumbing & Pipe Fitting Industry of the United States & Canada
Paul E. Rivers, 3M Fire Protection, MN [M]
Joseph L. Scheffey, Hughes Associates, Incorporated, MD [SE]
Thomas M. Suehr, Liberty Mutual Property, MA [I]
Rep. Property Casualty Insurers Association of America
Jeffery W. Sutton, Global Risk Consultants Corporation, MN [SE]
Fred K. Walker, U.S. Department of the Air Force, FL [U]

Alternates

Luis F. Arango, GE Insurance Solutions, TX [I]
(Alt. to R. L. Holcombe, III)
Robert G. Cirminiello, Liberty Mutual Property, NJ [I]
(Alt. to T. M. Suehr)
Paul F. Crowley, FM Approvals, MA [I]
(Alt. to R. C. Merritt)
James Devonshire, Buckeye Fire Equipment Company, TX [IM]
(Alt. to K. W. Humbrecht)
Russell P. Fleming, National Fire Sprinkler Association, NY [IM]
(Alt. to D. L. Dixon)
Christopher P. Hanauska, Hughes Associates, Incorporated, MD [SE]
(Alt. to J. L. Scheffey)
Scott D. Henderson, Fireman's Fund Insurance Company, MA [I]
(Alt. to S. L. Maxwell)
George E. Laverick, Underwriters Laboratories Incorporated, IL [RT]
(Voting Alt. to UL Rep.)
Keith Olson, Tyco Suppression Systems, WI [M]
(Alt. to T. L. Victor)
Max L. Trummel, M. Trummel & Associates, AR [IM]
(Alt. to R. R. Nelson, PE)

David R. Hague, NFPA Staff Liaison

This list represents the membership at the time the Committee was balloted on the final text of this edition. Since that time, changes in the membership may have occurred. A key to classifications is found at the back of the document.

NOTE: Membership on a committee shall not in and of itself constitute an endorsement of the Association or any document developed by the committee on which the member serves.

Committee Scope: This Committee shall have primary responsibility for documents on the protection of hazards by systems designed to function as both sprayed foam and water discharge, as from a sprinkler system.

Copyright National Fire Protection Association
Provided by IHS under license with NFPA
No reproduction or networking permitted without license from IHS
Not for Resale

Contents

Chapter 1 Administration **16–** 5
1.1 Scope **16–** 5
1.2 Purpose **16–** 5
1.3 Application **16–** 5
1.4 Retroactivity **16–** 5
1.5 Equivalency **16–** 6
1.6 Units **16–** 6

Chapter 2 Referenced Publications **16–** 6
2.1 General **16–** 6
2.2 NFPA Publications **16–** 6
2.3 Other Publications **16–** 6
2.4 References for Extracts in Mandatory Sections **16–** 6

Chapter 3 Definitions **16–** 6
3.1 General **16–** 6
3.2 NFPA Official Definitions **16–** 6
3.3 General Definitions **16–** 7

Chapter 4 General Requirements **16–** 8
4.1 General System Information **16–** 8
4.2 Types of Systems **16–** 8
4.3 Foam Discharge Duration **16–** 8
4.4 Reserve Supply of Foam **16–** 8
4.5 Preprimed Systems **16–** 8
4.6 Approvals **16–** 8

Chapter 5 System Components **16–** 8
5.1 Approved Devices and Materials **16–** 8
5.2 Discharge Devices **16–** 8
5.3 Foam Concentrates **16–** 8
5.4 Foam Concentrate Proportioning Means **16–** 8
5.5 Foam Concentrate Pumps **16–** 9
5.6 Power Supply and Controller **16–** 9
5.7 Foam Concentrate Storage Tanks **16–** 9
5.8 Piping, Valves, Pipe Fittings, and Hangers **16–** 9
5.9 Location **16–**10
5.10 Alarms **16–**10
5.11 Strainers. **16–**10
5.12 Automatic System Detection. **16–**10
5.13 Supervision **16–**10
5.14 Test Connections **16–**10

Chapter 6 Water Supplies **16–**10
6.1 Water Quality **16–**10
6.2 Water Supply Capacity, Pressure, and Duration **16–**10

Chapter 7 System Design and Installation **16–**11
7.1 General **16–**11
7.2 Working Plans and Specifications **16–**11
7.3 Design Criteria **16–**11
7.4 Hydraulic Calculations **16–**12

Chapter 8 Acceptance Tests **16–**14
8.1 Flushing of Supply Piping **16–**14
8.2 Hydrostatic Pressure Tests **16–**14
8.3 System Tests Discharging Foam from Foam-Water Deluge and Spray Systems **16–**14
8.4 Proportioning System Testing **16–**14
8.5 Instructions **16–**15

Chapter 9 Inspection, Testing, and Maintenance **16–**15
9.1 Inspection, Testing, and Maintenance of Foam-Water Sprinkler Systems **16–**15
9.2 Testing and Inspection of Alarm and Detection Devices **16–**15
9.3 Inspection, Testing, and Maintenance Frequency **16–**15

Annex A Explanatory Material **16–**15

Annex B Foam Solution Concentration Determination **16–**27

Annex C Informational References **16–**29

Index **16–**30

Copyright National Fire Protection Association
Provided by IHS under license with NFPA
No reproduction or networking permitted without license from IHS
Not for Resale

NFPA 16

Standard for the

Installation of Foam-Water Sprinkler and Foam-Water Spray Systems

2007 Edition

IMPORTANT NOTE: This NFPA document is made available for use subject to important notices and legal disclaimers. These notices and disclaimers appear in all publications containing this document and may be found under the heading "Important Notices and Disclaimers Concerning NFPA Documents." They can also be obtained on request from NFPA or viewed at www.nfpa.org/disclaimers.

NOTICE: An asterisk (*) following the number or letter designating a paragraph indicates that explanatory material on the paragraph can be found in Annex A.

Changes other than editorial are indicated by a vertical rule beside the paragraph, table, or figure in which the change occurred. These rules are included as an aid to the user in identifying changes from the previous edition. Where one or more complete paragraphs have been deleted, the deletion is indicated by a bullet (•) between the paragraphs that remain.

A reference in brackets [ ] following a section or paragraph indicates material that has been extracted from another NFPA document. As an aid to the user, the complete title and edition of the source documents for extracts in mandatory sections of the document are given in Chapter 2 and those for extracts in informational sections are given in Annex C. Editorial changes to extracted material consist of revising references to an appropriate division in this document or the inclusion of the document number with the division number when the reference is to the original document. Requests for interpretations or revisions of extracted text shall be sent to the technical committee responsible for the source document.

Information on referenced publications can be found in Chapter 2 and Annex C.

Chapter 1 Administration

1.1 Scope.

1.1.1 This standard contains minimum requirements for the design, installation, and maintenance of foam-water sprinkler and spray systems. These systems shall be designed with the required density for either foam or water application as the controlling factor, depending on the design purpose of the system. It is not the intent of this standard to specify where foam-water sprinkler and spray protection is required. The determination of where foam-water sprinkler and spray systems are required shall be made in accordance with such applicable standards as NFPA 30, *Flammable and Combustible Liquids Code*, and NFPA 409, *Standard on Aircraft Hangars*.

1.1.2* This standard shall apply only to systems using low-expansion foam.

1.2* Purpose. The purpose of this standard is to provide a reasonable degree of protection for life and property from fire through installation requirements for foam-water sprinkler and spray systems based on sound engineering principles, test data, and field experience.

1.3 Application.

1.3.1* Because of the dual extinguishing agent discharge characteristic, these systems shall be selectively applicable to combination Class A and Class B hazards.

1.3.2 Foam-water deluge systems are applicable to the protection of two-dimensional flammable liquid hazards. They shall be permitted to be used for any of the purposes or combinations thereof detailed in 1.3.2.1 through 1.3.2.3.

1.3.2.1 Extinguishment. The primary purpose of such systems is the extinguishment of fire in the protected hazard. For this purpose, foam solution discharge densities shall be provided by system design, use of selected discharge devices, and provision of supplies of water at required pressures to accomplish the system design. Foam discharge rates shall be able to provide required rates of water discharge from the system until shut off during the design period and following depletion of foam concentrate supplies.

1.3.2.2 Prevention. Prevention of fire in the protected hazard is a supplemental feature of such systems. Manual operation of a system to discharge foam or water selectively from the discharge devices in case of accumulations of hazardous materials from spills in such occupancies as garages, aircraft hangars, petrochemical plants, paint and varnish plants, or from other causes in the protected area, will afford protection against ignition, pending cleanup measures. In such cases, manual system operation provides foam coverage in the area with water discharge manually available.

1.3.2.3 Control and Exposure Protection. Control of fire to allow controlled burning of combustible materials where extinguishment is not possible and exposure protection to reduce heat transfer from an exposure fire can be accomplished by water spray or foam, or both, from these special systems. The degree of accomplishment is related strongly to the fixed discharge densities provided by the system design.

1.3.3 Foam of any type is not an effective extinguishing agent on fires involving liquefied or compressed gases (e.g., butane, butadiene, propane), on materials that will react violently with water (e.g., metallic sodium) or that produce hazardous materials by reacting with water, or on fires involving electrical equipment where the electrical nonconductivity of the extinguishing agent is of primary importance.

1.3.4* Only alcohol-type foam shall be used on fires in water-soluble solvents and polar solvents. Manufacturers of foam concentrates that are manufactured for the protection of such hazards shall be consulted for applicability.

1.3.5* Consideration shall be given to potential contamination of water supplies, treating systems, and effluent by foam concentrate, foam, or foam solution runoff. The foam concentrate manufacturer and the appropriate authority having jurisdiction shall be consulted for guidance.

1.4 Retroactivity. The provisions of this standard reflect a consensus of what is necessary to provide an acceptable degree of protection from the hazards addressed in this standard at the time the standard was issued.

1.4.1 Unless otherwise specified, the provisions of this standard shall not apply to facilities, equipment, structures, or installations that existed or were approved for construction or installation prior to the effective date of the standard. Where specified, the provisions of this standard shall be retroactive.

Copyright National Fire Protection Association
Provided by IHS under license with NFPA
No reproduction or networking permitted without license from IHS
Not for Resale

1.4.2 In those cases where the authority having jurisdiction determines that the existing situation presents an unacceptable degree of risk, the authority having jurisdiction shall be permitted to apply retroactively any portion of this standard deemed appropriate.

1.4.3 The retroactive requirements of this standard shall be permitted to be modified if their application clearly would be impractical in the judgment of the authority having jurisdiction, and only where it is clearly evident that a reasonable degree of safety is provided.

1.5 Equivalency. Nothing in this standard is intended to prevent the use of systems, methods, or devices of equivalent or superior quality, strength, fire resistance, effectiveness, durability, and safety over those prescribed by this standard.

1.5.1 Technical documents shall be submitted to the authority having jurisdiction to demonstrate equivalency.

1.5.2 The system, method, or device shall be approved for the intended purpose by the authority having jurisdiction.

1.6 Units. Metric units of measurement in this standard are in accordance with the modernized metric system known as the International System of Units (SI). The liter and bar units, which are not part of but are recognized by SI, commonly are used in international fire protection. These units are listed in Table 1.6 with conversion factors.

Table 1.6 SI Units and Conversion Factors

Name of Unit	Unit Symbol	Conversion Factor
liter	L	1 gal = 3.785 L
liter per minute per square meter	$L/min \cdot m^2$	1 gpm/ft^2 = 40.746 $L/min \cdot m^2$
millimeter per minute	mm/min	1 gpm/ft^2 = 40.746 mm/min = 40.746 $L/min \cdot m^2$
cubic decimeter	dm^3	1 gal = 3.785 dm^3
pascal	Pa	1 psi = 6894.757 Pa
bar	bar	1 psi = 0.0689 bar
bar	bar	1 bar = 105 Pa

Note: For additional conversions and information, see ASTM SI 10, *Standard for Use of the International System of Units (SI): The Modern Metric System.*

1.6.1 If a value for measurement as given in this standard is followed by an equivalent value in other units, the first stated shall be regarded as the requirement. A given equivalent value shall be considered to be approximate.

1.6.2 SI units have been converted by multiplying the quantity by the conversion factor and then rounding the result to the appropriate number of significant digits.

Chapter 2 Referenced Publications

2.1 General. The documents or portions thereof listed in this chapter are referenced within this standard and shall be considered part of the requirements of this document.

2.2 NFPA Publications. National Fire Protection Association, 1 Batterymarch Park, Quincy, MA 02169-7471.

NFPA 11, *Standard for Low-, Medium-, and High-Expansion Foam,* 2005 edition.

NFPA 13, *Standard for the Installation of Sprinkler Systems,* 2007 edition.

NFPA 14, *Standard for the Installation of Standpipe and Hose Systems,* 2007 edition.

NFPA 15, *Standard for Water Spray Fixed Systems for Fire Protection,* 2007 edition.

NFPA 20, *Standard for the Installation of Stationary Pumps for Fire Protection,* 2007 edition.

NFPA 22, *Standard for Water Tanks for Private Fire Protection,* 2003 edition.

NFPA 24, *Standard for the Installation of Private Fire Service Mains and Their Appurtenances,* 2007 edition.

NFPA 25, *Standard for the Inspection, Testing, and Maintenance of Water-Based Fire Protection Systems,* 2002 edition.

NFPA 30, *Flammable and Combustible Liquids Code,* 2003 edition.

NFPA 70, *National Electrical Code®,* 2005 edition.

NFPA 72®, National Fire Alarm Code®, 2007 edition.

NFPA 409, *Standard on Aircraft Hangars,* 2004 edition.

NFPA 1963, *Standard for Fire Hose Connections,* 2003 edition.

2.3 Other Publications.

2.3.1 ASME Publications. American Society of Mechanical Engineers, Three Park Avenue, New York, NY 10016-5990.

ASME Boiler and Pressure Vessel Code, Section VIII, Division 1, Rules for Construction of Pressure Vessels, 1998.

2.3.2 ASTM Publications. ASTM International, 100 Barr Harbor Drive, P.O. Box C700, West Conshohocken, PA 19428-2959.

ASTM SI 10, *Standard for Use of the International System of Units (SI): The Modern Metric System*, 1997 edition.

2.3.3 Other Publications.

Merriam-Webster's Collegiate Dictionary, 11th edition, Merriam-Webster, Inc., Springfield, MA, 2003.

2.4 References for Extracts in Mandatory Sections.

NFPA 11, *Standard for Low-, Medium-, and High-Expansion Foam,* 2005 edition.

NFPA 13, *Standard for the Installation of Sprinkler Systems,* 2007 edition.

Chapter 3 Definitions

3.1 General. The definitions contained in this chapter shall apply to the terms used in this standard. Where terms are not defined in this chapter or within another chapter, they shall be defined using their ordinarily accepted meanings within the context in which they are used. *Merriam-Webster's Collegiate Dictionary*, 11th edition, shall be the source for the ordinarily accepted meaning.

3.2 NFPA Official Definitions.

3.2.1* Approved. Acceptable to the authority having jurisdiction.

3.2.2* Authority Having Jurisdiction (AHJ). An organization, office, or individual responsible for enforcing the requirements

Copyright National Fire Protection Association
Provided by IHS under license with NFPA
No reproduction or networking permitted without license from IHS
Not for Resale

of a code or standard, or for approving equipment, materials, an installation, or a procedure.

3.2.3* Listed. Equipment, materials, or services included in a list published by an organization that is acceptable to the authority having jurisdiction and concerned with evaluation of products or services, that maintains periodic inspection of production of listed equipment or materials or periodic evaluation of services, and whose listing states that either the equipment, material, or service meets appropriate designated standards or has been tested and found suitable for a specified purpose.

3.2.4 Shall. Indicates a mandatory requirement.

3.2.5 Should. Indicates a recommendation or that which is advised but not required.

3.2.6 Standard. A document, the main text of which contains only mandatory provisions using the word "shall" to indicate requirements and which is in a form generally suitable for mandatory reference by another standard or code or for adoption into law. Nonmandatory provisions shall be located in an appendix or annex, footnote, or fine-print note and are not to be considered a part of the requirements of a standard.

3.3 General Definitions.

3.3.1* Discharge Device. A device designed to discharge water or foam-water solution in a predetermined, fixed, or adjustable pattern. Examples include, but are not limited to, sprinklers, spray nozzles, and hose nozzles.

3.3.2 Fire.

3.3.2.1 ***Class A.*** Fire in ordinary combustible materials, such as wood, cloth, paper, rubber, and many plastics.

3.3.2.2 ***Class B.*** A fire in flammable liquids, combustible liquids, petroleum greases, tars, oils, oil-based paints, solvents, lacquers, alcohols, and flammable gases.

3.3.3* Foam. A stable aggregation of small bubbles of lower density than oil or water that exhibits a tenacity for covering horizontal surfaces. [**11,** 2005]

3.3.4 Foam-Water Density. The unit rate of foam-water solution application to an area, expressed in [$L/min \cdot m^2$ (gpm/ft^2)].

3.3.5* Foam-Water Sprinkler System. A special system that is pipe-connected to a source of foam concentrate and to a water supply. The system is equipped with appropriate discharge devices for extinguishing agent discharge and for distribution over the area to be protected. The piping system is connected to the water supply through a control valve that usually is actuated by operation of automatic detection equipment that is installed in the same areas as the sprinklers. When this valve opens, water flows into the piping system, foam concentrate is injected into the water, and the resulting foam solution discharging through the discharge devices generates and distributes foam. Upon exhaustion of the foam concentrate supply, water discharge follows and continues until shut off manually. Systems can be used for discharge of water first, followed by discharge of foam for a specified period, and then followed by water until manually shut off. Existing deluge sprinkler systems that have been converted to the use of aqueous film-forming foam or film-forming fluoroprotein foam are classified as foam-water sprinkler systems.

3.3.5.1* ***Foam-Water Deluge System.*** A foam-water sprinkler system employing open discharge devices, which are attached to a piping system that is connected to a water supply through a valve that is opened by the operation of a detection system, which is installed in the same areas as the discharge devices. When this valve opens, water flows into the piping system and discharges from all discharge devices attached thereto.

3.3.5.2* ***Foam-Water Dry Pipe System.*** A sprinkler system employing automatic sprinklers or nozzles that are attached to a piping system that contains air or nitrogen under pressure, the release of which (as from the opening of a sprinkler) permits the water pressure to open a valve known as a dry pipe valve. The water then flows into the piping system and out the opened sprinklers.

3.3.5.3* ***Foam-Water Preaction System.*** A sprinkler system employing automatic sprinklers or nozzles attached to a piping system containing air that might or might not be under pressure, with a supplemental detection system installed in the same area as the sprinklers. Actuation of the detection system opens a valve that permits water to flow into the sprinkler piping system and to be discharged from any sprinklers that have activated.

3.3.5.4* ***Foam-Water Spray System.*** A special system that is pipe-connected to a source of foam concentrate and to a water supply. The system is equipped with foam-water spray nozzles for extinguishing agent discharge (foam followed by water or in reverse order) and for distribution over the area to be protected. System operation arrangements parallel those for foam-water sprinkler systems as described in the definition of Foam-Water Sprinkler System.

3.3.5.5* ***Preprimed System.*** A wet pipe system containing foam solution.

3.3.6* Foam Concentrate. A concentrated liquid foaming agent as received from the manufacturer. [**11,** 2005]

3.3.6.1* ***Alcohol-Resistant Foam Concentrate.*** A concentrate used for fighting fires on water-soluble materials and other fuels destructive to regular, AFFF, or FFFP foams, as well as for fires involving hydrocarbons. [**11,** 2005]

3.3.6.2* ***Aqueous Film-Forming Foam Concentrate (AFFF).*** A concentrate based on fluorinated surfactants plus foam stabilizers and usually diluted with water to a 1 percent, 3 percent, or 6 percent solution. [**11,** 2005]

3.3.6.3* ***Film-Forming Fluoroprotein Foam Concentrate (FFFP).*** A concentrate that uses fluorinated surfactants to produce a fluid aqueous film for suppressing hydrocarbon fuel vapors. [**11,** 2005]

3.3.6.4* ***Fluoroprotein Foam Concentrate.*** A concentrate very similar to protein-foam concentrate but with a synthetic fluorinated surfactant additive. [**11,** 2005]

3.3.6.5* ***Medium- and High-Expansion Foam Concentrate.*** A concentrate, usually derived from hydrocarbon surfactants, used in specially designed equipment to produce foams having foam-to-solution volume ratios of 20:1 to approximately 1000:1. [**11,** 2005]

3.3.6.6* ***Other Synthetic Foam Concentrate.*** A concentrate based on hydrocarbon surface active agents and listed as a wetting agent, foaming agent, or both. [**11,** 2005]

Copyright National Fire Protection Association
Provided by IHS under license with NFPA
No reproduction or networking permitted without license from IHS
Not for Resale

3.3.6.7* ***Protein Foam Concentrate.*** Concentrate consisting primarily of products from a protein hydrolysate, plus stabilizing additives and inhibitors to protect against freezing, to prevent corrosion of equipment and containers, to resist bacterial decomposition, to control viscosity, and to otherwise ensure readiness for use under emergency conditions. [**11,** 2005]

3.3.6.8 ***Synthetic Foam Concentrate.*** Concentrate based on foaming agents other than hydrolyzed proteins and including aqueous film-forming foam (AFFF) concentrates, medium- and high-expansion foam concentrates, and other synthetic foam concentrates. [**11,** 2005]

3.3.7* Foam Solution. A homogeneous mixture of water and foam concentrate in the correct proportions. [**11,** 2005]

3.3.8 Proportioning. The continuous introduction of foam concentrate at the recommended ratio into the water stream to form foam solution. [**11,** 2005]

3.3.9 Rate. The total flow of solution per unit of time, which is expressed in gpm (L/min) in this standard.

Chapter 4 General Requirements

4.1 General System Information.

4.1.1 Foam-water deluge and preaction systems shall be provided with automatic and auxiliary manual tripping means in accordance with Section 5.12.

4.1.2 Manual operation only shall be permitted for foam-water deluge systems where acceptable to the authority having jurisdiction.

4.2 Types of Systems. Foam-water systems shall be of the wet pipe, dry pipe, deluge, or preaction type.

4.3 Foam Discharge Duration.

4.3.1 Systems shall deliver foam to the hazards they protect for a specified period at given densities, either prior to water discharge or following water discharge, depending upon system design purpose.

4.3.2 Following completion of discharge of foam solution to the hazards protected, foam-water sprinkler and spray systems shall discharge water until manually shut off.

4.4* Reserve Supply of Foam.

4.4.1 The authority having jurisdiction shall be consulted as to the means by which a reserve supply of foam concentrate shall be made available.

4.4.2* The reserve supply shall be listed for use with system components.

4.5* Preprimed Systems.

4.5.1 Wet pipe foam-water systems shall be preprimed with foam-water solution.

4.5.2 Systems shall not be required to be preprimed where recommended by the foam concentrate manufacturer and where approved by the authority having jurisdiction.

4.6 Approvals.

4.6.1 Prior to designing a system for consideration, the authority having jurisdiction shall be consulted.

4.6.2 All plans and specifications for the installation shall be approved by the authority having jurisdiction prior to installation, and such authority shall be consulted as to devices and materials used in system construction and as to selection of the foam concentrate to be provided for system use.

4.6.3 All equipment and concentrates shall be approved for the particular application intended.

Chapter 5 System Components

5.1 Approved Devices and Materials.

5.1.1 All component parts, including foam concentrates, shall be listed for the use intended.

5.1.2 Where listed components are not manufactured, the components shall be of an approved type.

5.2 Discharge Devices.

5.2.1 Discharge devices and foam concentrates shall be listed for use together.

5.2.2 Discharge devices for foam-water deluge and spray shall be permitted to be air-aspirating, such as foam-water sprinkler and foam-water spray nozzles, or they shall be permitted to be non-air-aspirating, such as standard sprinklers.

5.2.3 Discharge devices for foam-water wet pipe, dry pipe, and preaction systems shall be automatic in operation and shall be non-air-aspirating.

5.3 Foam Concentrates.

5.3.1* Foam concentrates shall be listed for use with the foam concentrate proportioning equipment and with the discharge devices with which a given system is equipped.

5.3.1.1 Replacement supplies of foam concentrates shall be listed for use with system components.

5.3.1.2* Different types and/or brands of foam concentrates shall not be mixed for storage. Different brands of the same type of concentrate shall not be mixed unless data are provided by the manufacturer and accepted by the authority having jurisdiction, to prove that the brands are compatible. Foams generated separately from protein, fluoroprotein, FFFP, and AFFF concentrates shall be permitted to be applied to a fire in sequence or simultaneously.

5.3.2 The quantities of foam concentrates to be used shall be based on flow rates and duration times for the application time period as specified in Chapter 7.

5.3.2.1 The foam concentrate used in a preprimed system shall be in addition to the quantity specified in 5.3.2.

5.3.3* There shall be a reserve supply of foam concentrate to meet the design requirements of the system and to put the system back in service within 24 hours after operation.

5.4 Foam Concentrate Proportioning Means.

5.4.1 Balanced-pressure or positive-pressure injection shall be the preferred methods for introduction of foam concentrates into the water flowing through the supply piping to the system.

5.4.2* Balanced-pressure injection methods shall be one of the following:

Copyright National Fire Protection Association
Provided by IHS under license with NFPA
No reproduction or networking permitted without license from IHS
Not for Resale

(1) A balance-pressure proportioning system utilizing a foam concentrate pump discharging through a metering orifice into a proportioning controller with the foam concentrate and water pressures automatically maintained as equal by the use of a pressure balancing valve.
(2) A balanced-pressure proportioning system utilizing a pressure proportioning tank with a diaphragm or bladder to separate the water and foam concentrate discharging through a metering orifice into a proportioning controller.
(3) An in-line balanced-pressure proportioning system utilizing a foam concentrate pump or bladder tank. A pressure regulating device placed in the pump return line shall maintain constant pressure in the foam concentrate supply line at all design flow rates. This constant pressure shall be greater than the maximum water pressure under all operating conditions.
(4) Foam concentrate pump discharging through a metering orifice into the protection system riser with the foam pressure at the upstream side of the orifice exceeding the water pressure in the system riser by a specific design value.

5.4.3 Other listed methods for foam proportioning shall be permitted as follows:

(1) Balanced positive-pressure injection systems utilizing a foam concentrate pump and drive motor that vary the foam concentrate pump output to match water flow rates while maintaining the correct percentage of foam concentrate
(2) Around-the-pump proportioners
(3)*In-line eductors (inductors)

5.4.4* Orifice plates shall have telltale indicators giving orifice diameters and indication of flow direction if flow characteristics vary with flow direction.

5.5* Foam Concentrate Pumps.

5.5.1 Materials.

5.5.1.1* The design and materials of construction for foam concentrate pumps shall be approved for use with the type of foam concentrate used in the system.

5.5.1.2 Special attention shall be paid to the type of seal or packing used.

5.5.2 Rated Capacities.

5.5.2.1 Foam concentrate pumps shall have rated capacities at or in excess of the maximum system demand.

5.5.2.2 To ensure positive injection of foam concentrate, the discharge pressure ratings of pumps at the design discharge capacity shall be in excess of the maximum water pressure available under any condition at the point of foam concentrate injection.

5.5.3 Overpressurization.

5.5.3.1* Foam concentrate pumps capable of overpressurizing the system shall be provided with means of pressure relief from the discharge to the supply side of the pump to prevent excessive pressure and temperature.

5.5.3.2 Overpressure shall not exceed the working pressure of the foam concentrate piping system.

5.5.4 Flushing.

5.5.4.1* Foam concentrate pumps shall have means for flushing.

5.5.4.2 Foam concentrate pumps shall be provided with a drain cock or valve.

5.5.5 Foam concentrate pumps shall be automatic-starting upon system actuation.

5.5.6 Pumps shall be listed for this service in accordance with NFPA 20, *Standard for the Installation of Stationary Pumps for Fire Protection.*

5.6 Power Supply and Controller. The power supply and controllers for the drivers of foam concentrate pumps shall be installed in accordance with NFPA 20, *Standard for the Installation of Stationary Pumps for Fire Protection*, and NFPA 70, *National Electrical Code.*

5.7 Foam Concentrate Storage Tanks.

5.7.1 Storage tanks for foam concentrates shall be constructed of materials compatible with the liquid, shall be solidly mounted, and shall be permanently located.

5.7.2 The storage temperatures for which foam concentrates are listed shall be considered the temperature limits for location of storage tanks.

5.7.3 Atmospheric-Type Storage Tanks.

5.7.3.1 Storage tanks shall have capacities to accommodate the needed quantities of foam concentrate plus space for thermal expansion.

5.7.3.2 Foam concentrate outlets from the tanks shall be located to prevent sediment from being drawn into the system.

5.7.3.3 When determining the quantity of foam concentrates, the volume of the sediment pocket shall be added to the quantity needed for system operation.

5.7.3.4* Tanks shall be equipped with conservation-type vents, access handholes, or manholes that are located to provide for inspection of the following:

(1) Interior tank surfaces
(2) Connections for pump suction, relief, and testing lines
(3) Protected sight gauges or other liquid level devices
(4) Filling and draining connections

5.7.3.5 Tank discharge outlets shall be located to furnish a positive head on the pump suction.

5.7.4 Pressure-Type Storage Tanks.

5.7.4.1* Pressure-proportioning tanks shall have means for filling, for gauging the level of foam concentrates, and for drainage, cleaning, and inspection of interior surfaces and of the concentrate-holding bladder or diaphragm, if provided.

5.7.4.2 These tanks shall be stamped to be identified as meeting the requirements of *ASME Boiler and Pressure Vessel Code*, Section VIII, Division 1.

5.8 Piping, Valves, Pipe Fittings, and Hangers.

5.8.1 Piping, valves, pipe fittings, and hangers, including corrosion-protection coatings, shall be in accordance with NFPA 13, *Standard for the Installation of Sprinkler Systems.*

5.8.2* Piping, fittings, and valves shall be of a material compatible with the foam concentrate, foam solution, or water used, as applicable.

5.8.3* Rubber-gasketed fittings shall be permitted to be used to connect pipe in fire-exposed areas where the foam-water deluge system is automatically controlled.

Copyright National Fire Protection Association
Provided by IHS under license with NFPA
No reproduction or networking permitted without license from IHS
Not for Resale

5.8.3.1 Fire-exposed areas in which these fittings are located shall be protected by automatic foam-water deluge systems or other approved means.

5.9 Location. Equipment items, such as storage tanks and proportioners for foam concentrates; pumps for water and foam concentrates; and control valves for water, foam concentrates, and foam solution, shall be located as near as possible to the hazard or hazards they protect but shall not be exposed to a fire in a manner that is likely to impair system performance.

5.10 Alarms. Alarms shall be provided in accordance with the requirements of NFPA 13, *Standard for the Installation of Sprinkler Systems.*

5.11 Strainers.

5.11.1 Strainers shall be installed so that they are accessible for cleaning or flushing.

5.11.2* Strainers shall be installed in foam concentrate lines upstream of foam concentrate pumps.

5.11.3 Strainers for Foam Concentrates.

5.11.3.1 Where listed strainers of the proper size are not available, strainers that have a ratio of open-basket area to inlet pipe size of at least 10:1 shall be used.

5.11.3.2 Strainers shall be capable of removing all solids of a size that would obstruct system components.

5.11.3.3 Perforations shall be no larger than the smallest orifice in the system and no less than ⅛ in. (3.2 mm).

5.11.3.4 Strainers shall be installed so as to be accessible for cleaning (flushing) while maintaining system discharge during an emergency.

5.12 Automatic System Detection.

5.12.1 Detection required for foam-water deluge systems shall be in accordance with NFPA 15, *Standard for Water Spray Fixed Systems for Fire Protection.*

5.12.2 Detection required for foam-water preaction systems shall be in accordance with NFPA 13, *Standard for the Installation of Sprinkler Systems.*

5.13 Supervision.

5.13.1* Main water, foam concentrate, and foam solution valves shall be supervised by one of the following methods:

(1) Central station, proprietary, or remote station signaling service
(2) Local signaling service that will cause the sounding of an audible signal at a constantly attended location
(3) Valves locked in the open position
(4) Valves located within fenced enclosures under the control of the owner, sealed in the open position, and inspected weekly as part of an approved procedure

5.13.2 Detection and actuation circuitry shall be supervised through a listed panel in accordance with *NFPA 72, National Fire Alarm Code.*

5.14* Test Connections. System test connections shall be sized to accommodate both the low flow of the proportioner and the maximum anticipated flow through the proportioner.

Chapter 6 Water Supplies

6.1* Water Quality.

6.1.1 Water supplied to foam-water systems shall be compatible with the foam concentrate to be used.

6.1.2 Water that contains solids likely to clog orifices in discharge devices but that is otherwise acceptable for making foam shall be permitted to be used after passing through line strainers.

6.2 Water Supply Capacity, Pressure, and Duration.

6.2.1 Water supplies for deluge foam-water sprinkler systems and foam-water spray systems shall be automatic.

6.2.1.1 Water supplies shall be of a capacity and a pressure that are capable of maintaining foam discharge or water discharge, or both, at the design rate for the required period of discharge over the entire area protected by systems expected to operate simultaneously.

6.2.2* Where the water supply is dependent on public water sources, attention shall be given to the pollution hazard introduced by the use of foam concentrate.

6.2.2.1 Cross-connections shall be reviewed by public health agencies concerned.

6.2.3 Duration.

6.2.3.1* Water supplies shall be designed to supply the system at the design discharge rate and pressure for at least 60 minutes.

6.2.3.2 Water supplies for aircraft hangars shall be in accordance with NFPA 409, *Standard on Aircraft Hangars.*

6.2.4* Unless the requirements of 6.2.4.1 or 6.2.4.2 are met, the fire department connection(s) shall consist of two 2½ in. (65 mm) NH internal threaded swivel fitting(s) with connections using "2.5-7.5 NH standard thread," as specified in NFPA 1963, *Standard for Fire Hose Connections.* [**13:**6.8.1]

6.2.4.1 Where local fire department connections do not conform to NFPA 1963, *Standard for Fire Hose Connections*, the authority having jurisdiction shall be permitted to designate the connection to be used. [**13:**6.8.1.1]

6.2.4.2 The use of threadless couplings shall be permitted where required by the authority having jurisdiction and where listed for such use. [**13:**6.8.1.2]

6.2.4.3 Fire department connections shall be equipped with listed plugs or caps, properly secured and arranged for easy removal by fire departments. [**13:**6.8.2]

6.2.4.4 Fire department connections shall be of an approved type. [**13:**6.8.3]

6.2.5 Fire Department Connection.

6.2.5.1* When a fire department connection is required, it shall be installed on the supply side of the proportioner.

6.2.5.2 Where a fire department connection is provided, the following items shall be evaluated before installation or use:

(1) Overpressurizing of system components
(2) Imbalance of proportioning equipment
(3) Dilution of proportioned foam solution
(4) Disturbance of system accessory devices including, but not limited to, the following:
    (a) Pressure switches
    (b) Hydraulic control valves
    (c) Main control valve trim
(5) Pressures and flows exceeding the foam system design capability

Copyright National Fire Protection Association
Provided by IHS under license with NFPA
No reproduction or networking permitted without license from IHS
Not for Resale

6.2.5.3 A sign that states the following shall be placed at the fire department connection:

FIRE DEPARTMENT CONNECTION

THIS CONNECTION FEEDS A FOAM-WATER SPRINKLER SYSTEM.

DO NOT PUMP AT PRESSURES EXCEEDING [*insert design pressure*] UNTIL FOAM LIQUID SUPPLY IS EXHAUSTED.

IF INCIDENT IS CONTROLLED BY FOAM BLANKET, DO NOT DESTROY FOAM BLANKET BY EXCESSIVE APPLICATION OF WATER.

Chapter 7 System Design and Installation

7.1 General.

7.1.1 Foam-water sprinkler systems shall meet the minimum design criteria as presented in this chapter.

7.1.2 Where occupancy standards specify more stringent criteria, they shall take precedence.

7.1.3 The design and installation of foam-water systems shall be entrusted to experienced and responsible persons.

7.2 Working Plans and Specifications.

7.2.1 Working plans shall be in accordance with NFPA 13, *Standard for the Installation of Sprinkler Systems*.

7.2.2 The requirements in Section 7.2 shall also apply.

7.2.3 Plans and specifications shall indicate the quantity of foam concentrate to be stored, including the quantity in reserve, the concentration designation, and the minimum anticipated temperature of the concentrate at the point of proportioning.

7.2.4 The specifications shall indicate the specific tests to be conducted.

7.2.5 Complete plans and detailed data describing pumps, drivers, controllers, power supply, fittings, suction and discharge connections, and suction conditions shall be submitted by the engineer or contractor to the authority having jurisdiction for approval before installation.

7.2.6 Charts showing head delivery, efficiency, and brake horsepower curves of pumps shall be furnished by the contractor.

7.2.7 Where draft curtains, detection zones, and drainage area separations impact the performance of the foam-water system, plans shall be made available.

7.2.8 Plans shall indicate the location and description of hazards to be protected.

7.3 Design Criteria.

7.3.1* Referenced Standards. System designs shall conform to all the applicable requirements of the following standards unless otherwise specified in this standard:

(1) NFPA 11, *Standard for Low-, Medium-, and High-Expansion Foam*
(2) NFPA 13, *Standard for the Installation of Sprinkler Systems*
(3) NFPA 14, *Standard for the Installation of Standpipe and Hose Systems*
(4) NFPA 15, *Standard for Water Spray Fixed Systems for Fire Protection*
(5) NFPA 20, *Standard for the Installation of Stationary Pumps for Fire Protection*
(6) NFPA 22, *Standard for Water Tanks for Private Fire Protection*
(7) NFPA 24, *Standard for the Installation of Private Fire Service Mains and Their Appurtenances*
(8) NFPA 30, *Flammable and Combustible Liquids Code*
(9) NFPA 70, *National Electrical Code*
(10) *NFPA 72, National Fire Alarm Code*

7.3.2* Discharge Criteria.

7.3.2.1 The design discharge density shall be in accordance with the applicable occupancy standard for water or foam-water systems but in no case less than 0.16 gpm/ft^2 (6.5 mm/m^2).

7.3.2.2 Water-soluble and certain flammable and combustible liquids and polar solvents that are destructive to conventional foams necessitate the use of alcohol-resistant foams.

7.3.2.3 In all cases, the manufacturer of the foam concentrate and the foam-making equipment shall be consulted regarding limitations and for recommendations based on listings or specific fire tests.

7.3.3 Discharge Duration.

7.3.3.1 The foam solution shall be designed to discharge for a period of 10 minutes (based on the density as specified in 7.3.2.1) over the entire system area for deluge and spray foam-water systems and over the design area for wet pipe, dry pipe, and preaction foam-water systems.

7.3.3.2 Where actual system discharge exceeds the minimum as specified in 7.3.2.1, a proportionate reduction in the duration of the foam discharge time shall be permitted, but in no case shall the duration be less than 7 minutes.

7.3.4 Proportioning System. The proportioning system selected shall be capable of meeting the following conditions:

(1) Actual calculated system discharge demand at the proper foam percentage for the most hydraulically demanding condition
(2) Actual calculated system discharge demand at the proper foam percentage for the least hydraulically demanding condition
(3) Foam liquid pressures at least equal to the highest anticipated water pressure

7.3.5 Foam Concentrate Lines.

7.3.5.1* Where foam concentrate lines to the protective system injection points are run underground or where they run aboveground for more than 50 ft (15 m), these lines shall be maintained full, and a means of checking the tightness of the system shall be provided.

7.3.5.2 The temperature of the foam concentrate lines and components shall be maintained within the storage temperature limits specified for the foam concentrate.

7.3.6 Drainage.

7.3.6.1 Facilities shall be provided for the safe removal or retention of the largest anticipated flammable liquid spill plus the free water reaching the floor from the fixed fire protection system, as well as the discharge from hose streams.

7.3.6.2 Where applicable occupancy standards specify containment or drainage that differs from that specified in 7.3.6.1, the occupancy standard shall take precedence.

Copyright National Fire Protection Association
Provided by IHS under license with NFPA
No reproduction or networking permitted without license from IHS
Not for Resale

7.3.7 Foam-Water Wet Pipe, Dry Pipe, and Preaction Systems.

7.3.7.1 Total Design Area.

(A) The total design area shall be 5000 ft^2 (465 m^2).

(B) Where applicable occupancy standards specify design areas different from that specified in 7.3.7.1(A), the occupancy standards shall take precedence.

7.3.7.2 Sprinkler Spacing.

(A) Sprinkler spacing shall not exceed 100 ft^2 (9.3 m^2) per sprinkler or exceed 12 ft (3.7 m) spacing between sprinklers on a branch line or between branch lines.

(B) Where applicable occupancy standards specify a sprinkler spacing different from that specified in 7.3.7.2(A), the occupancy standards shall take precedence.

7.3.7.3 For foam-water preaction systems, the requirements of 7.3.8 shall also take precedence.

7.3.7.4 Temperature Rating.

(A) The temperature rating of sprinklers shall be within the range of 250°F to 300°F (121°C to 149°C) where they are located at the roof or ceiling.

(B) Where sprinklers are located at an intermediate level, the temperature rating shall be within the range of 135°F to 170°F (57°C to 77°C), unless ambient conditions require a higher rating.

7.3.8 Foam-Water Deluge Systems.

7.3.8.1 Tripping.

(A)* In automatic systems, the detection equipment shall be connected to a means for tripping water deluge valves and other system-control equipment.

(B) Supplemental manual means for this purpose also shall be provided.

7.3.8.2 Foam Concentrate Injection.

(A) In automatic systems, foam concentrate injection shall be activated automatically by, or concurrently with, activation of the main water supply control valve.

(B) Manual operating means shall be designed for this same purpose.

7.3.8.3 Automatic detection equipment, whether pneumatic, hydraulic, or electric, shall be provided with complete supervision arranged so that failure of equipment, loss of supervising air pressure, or loss of electric energy results in clear notification of the abnormal condition.

7.3.8.4 Where used in a corrosive atmosphere, the detection devices shall be of materials not subject to corrosion or of materials protected to resist corrosion.

7.3.8.5* Automatic detection equipment of the electric type and any auxiliary equipment of the electric type, if in hazardous areas, shall be designed specifically for use in such areas.

7.3.8.6 In automatic systems, manually operated tripping devices shall actuate the automatic control valve by mechanical, pneumatic, electric, or other approved means.

7.3.8.6.1 The manual device shall be strong enough to prevent breakage.

7.3.8.6.2 Manual controls shall not necessitate a pull of more than 40 lb (force) [178 N] or a movement of more than 14 in. (356 mm) to secure operation.

7.4 Hydraulic Calculations.

7.4.1 Foam-Water Deluge Systems.

7.4.1.1 System piping shall be hydraulically designed to obtain uniform foam and water distribution and to allow for loss of head in water supply piping.

7.4.1.1.1 The adjustment in pipe sizes shall be based on a maximum variation of 20 percent above the specified discharge rate per sprinkler or nozzle.

7.4.1.2 Pipe sizes shall be adjusted according to detailed friction-loss calculations.

7.4.1.2.1 These calculations shall show the relationship between the water supply and the water demand.

7.4.1.3 Hydraulic calculations for determining the foam solution and water flow characteristics of systems covered by this standard shall be in accordance with NFPA 13, *Standard for the Installation of Sprinkler Systems*.

7.4.1.3.1 Piping carrying foam solution shall be sized as if carrying plain water.

7.4.1.4* The friction losses in piping carrying foam concentrate shall be calculated using the Darcy formula, also known as the Fanning formula.

7.4.1.4.1 Friction factors for use with the Darcy formula shall be selected from the graphs shown in Figure 7.4.1.4.1(a) through Figure 7.4.1.4.1(d).

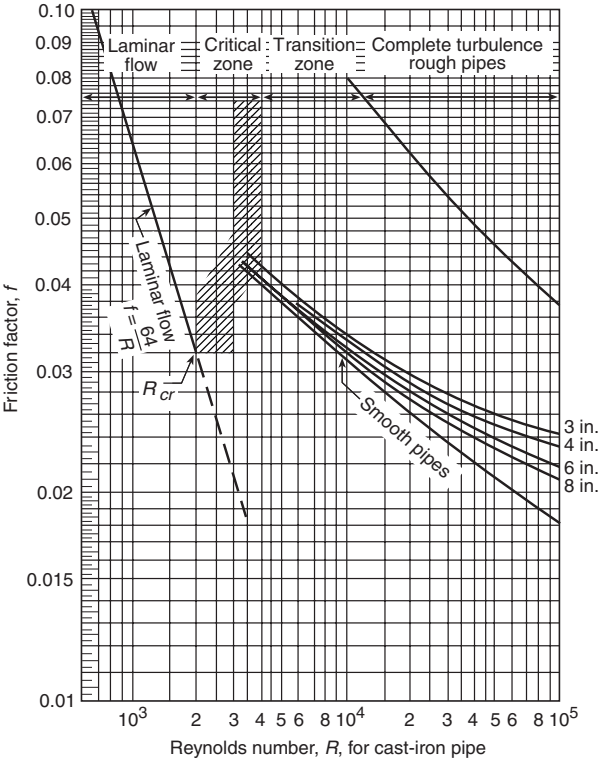

FIGURE 7.4.1.4.1(a) Moody Diagram for Cast-Iron Pipe, $R \leq 10^5$.

Copyright National Fire Protection Association
Provided by IHS under license with NFPA
No reproduction or networking permitted without license from IHS
Not for Resale

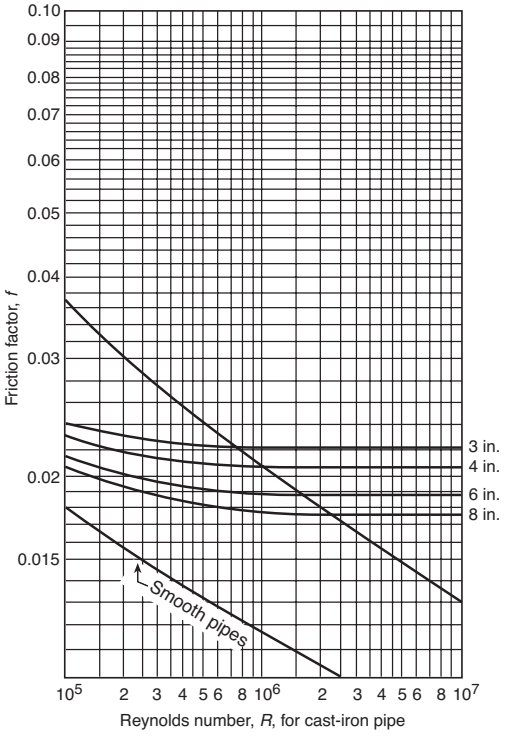

FIGURE 7.4.1.4.1(b) Moody Diagram for Cast-Iron Pipe, $R \geq 10^5$.

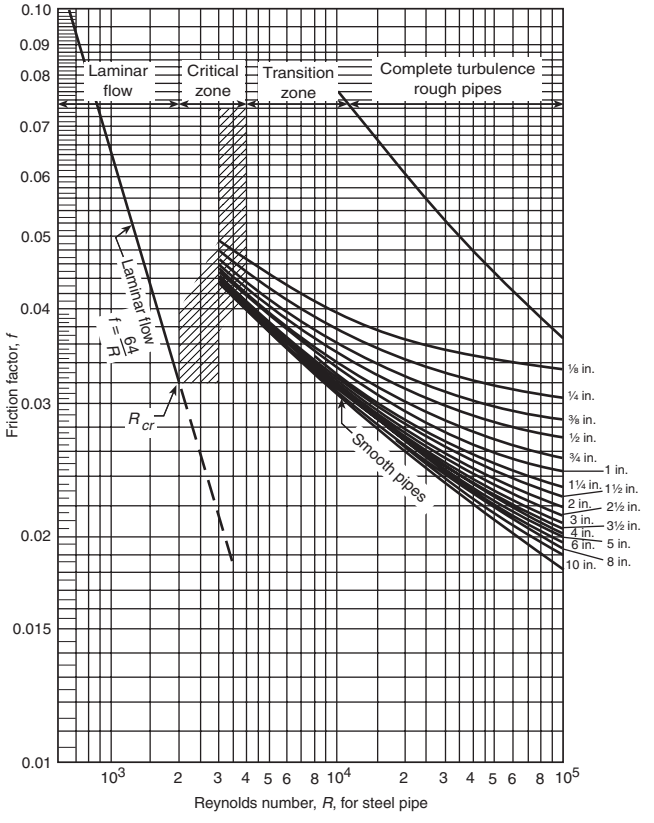

FIGURE 7.4.1.4.1(c) Moody Diagram for Steel Pipe, $R \leq 10^5$.

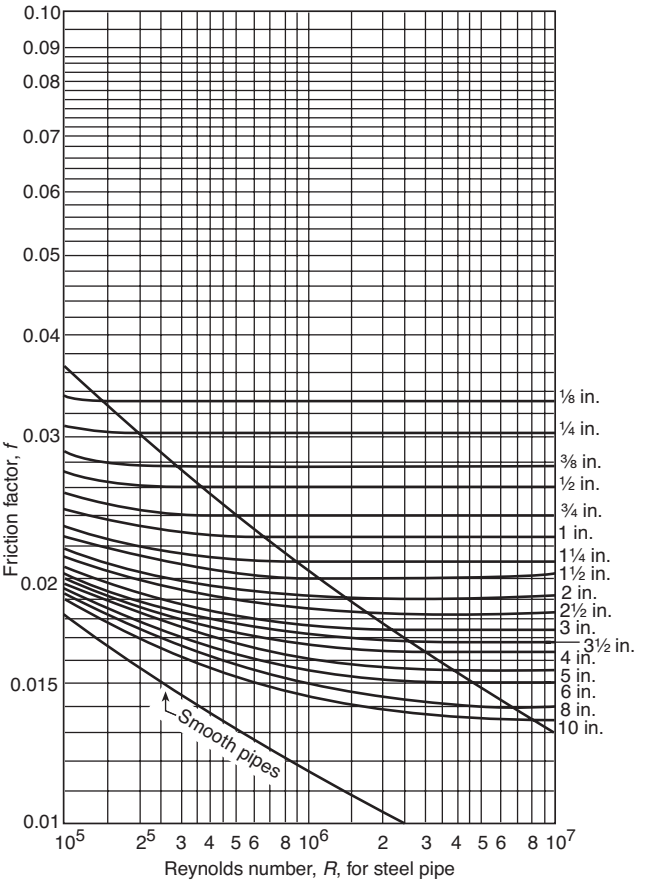

FIGURE 7.4.1.4.1(d) Moody Diagram for Steel Pipe, $R \geq 10^5$.

7.4.1.4.2 In calculating the Reynolds number for selecting friction factors from the graphs, the actual density (or specific gravity) of the foam concentrate to be employed in the system shall be used.

7.4.1.4.3 The viscosity used shall be the actual viscosity of the foam concentrate at the lowest anticipated storage temperature.

7.4.1.5 For purposes of computing friction loss in piping, the *C* values shall be used for the Hazen-Williams formula in accordance with Table 7.4.1.5.

7.4.2 Foam-Water Wet Pipe, Dry Pipe, and Preaction Systems.

7.4.2.1 System piping shall be hydraulically designed to obtain uniform foam and water distribution and to allow for loss of head in system piping.

7.4.2.2* Two sets of hydraulic calculations shall be provided, as follows:

(1) Actual calculated demand flow and pressure based on the most hydraulically demanding condition, balanced to the available water supply
(2) Actual calculated demand flow and pressure based on the least hydraulically demanding design area, balanced to the available water supply

Copyright National Fire Protection Association
Provided by IHS under license with NFPA
No reproduction or networking permitted without license from IHS
Not for Resale

Table 7.4.1.5 Hazen-Williams *C* Values

Pipe or Tube	*C* Value*
Unlined cast or ductile iron	100
Black steel (dry systems including preaction)	100
Black steel (wet systems including deluge)	120
Galvanized (all)	120
Plastic (listed) all	150
Cement-lined cast or ductile iron	140
Copper tube or stainless steel	150
Asbestos cement	140
Concrete	140

*The authority having jurisdiction is permitted to consider other *C* values. [**13:** Table 22.4.4.7]

7.4.2.3* Hydraulic balance to, and comparison with, the available water supply shall verify that the actual system discharge will not exceed the capability of the foam concentrate supply to provide foam solution discharge as specified in 7.3.3.1 and 7.3.3.2.

7.4.2.4 Pipe sizes shall be adjusted according to detailed friction-loss calculations.

7.4.2.4.1 Friction-loss calculations shall show the relationship between the water supply and system demand.

7.4.2.5 Hydraulic calculations for determining the foam solution and water flow characteristics of systems covered by this standard shall be in accordance with NFPA 13, *Standard for the Installation of Sprinkler Systems*.

7.4.2.5.1 Friction-loss characteristics for foam solution piping shall be considered the same as if the piping were carrying water.

7.4.2.6 For purposes of computing friction loss in piping, the *C* values in Table 7.4.1.5 shall be used in the Hazen-Williams formula.

7.4.3 The friction losses in piping carrying foam concentrate shall be calculated in accordance with the requirements of 7.4.1.4.

Chapter 8 Acceptance Tests

8.1* Flushing of Supply Piping.

8.1.1 Underground mains and lead-in connections shall be thoroughly flushed before connection is made to the system piping.

8.1.2 Flushing shall be in accordance with NFPA 24, *Standard for the Installation of Private Fire Service Mains and Their Appurtenances*.

8.2 Hydrostatic Pressure Tests.

8.2.1* All piping, including foam concentrate lines and the system piping, shall be hydrostatically tested at 200 psi (13.8 bar) or at 50 psi (3.4 bar) in excess of the maximum static pressure where the maximum static pressure exceeds 150 psi (10.3 bar).

8.2.1.1 The pressure shall be maintained without loss for 2 hours.

8.2.1.2 Bladder tanks shall not be included in pressure tests.

8.2.2 Underground Piping Systems. Underground water piping shall be tested in accordance with NFPA 24, *Standard for the Installation of Private Fire Service Mains and Their Appurtenances*.

8.3 System Tests Discharging Foam from Foam-Water Deluge and Spray Systems.

8.3.1* Acceptance Tests.

8.3.1.1 Acceptance tests shall be conducted to ensure that the hazard is fully protected in accordance with Chapter 4, and to determine the flow pressures, actual discharge capacity, consumption rate of foam-producing materials, staffing needs, and other operating characteristics.

8.3.1.2 The tests shall include the following:

(1) Foam discharge from a single system
(2) Simultaneous foam discharge of the maximum number of systems expected to operate on a single hazard

8.3.2 The discharge shall be continued for the time required to obtain stabilized discharge.

8.4* Proportioning System Testing.

8.4.1 Operation of the proportioning equipment shall be verified by flow tests.

8.4.1.1 The percentage of foam concentrate in solution shall be verified by flow tests at minimum listed flow capacity of the proportioning equipment and foam concentrate for closed (wet pipe, preaction, or dry pipe) systems or midrange flow for open deluge systems, and meet requirements given in 8.4.1.4. For eductor systems and deluge systems using fixed orifice proportioning directly into system, full-system flow tests are required and shall meet requirements of 8.4.1.4.

8.4.1.1.1 Foam flow tests shall include a minimum flow test for wet pipe, dry pipe, and preaction systems equal to the flow of the most remote (4) sprinklers. The percentage of foam concentrate shall be greater than the manufacturer's listed percentage rate minus 0 percent to plus 30 percent for balanced pressure systems. For positive pressure systems with pump- or pressure-controlled bladder tank and inline balanced pressure-type proportioning systems, the percentage of foam concentrate shall be minus 0 percent to plus 30 percent or greater at the (4) remote sprinkler flow.

8.4.1.2 During the tests the pressure at the proportioning devices shall be at the design operating pressure of the system or systems tested.

8.4.1.3 The percentage of all foam concentrates injected into the water at their listed flow rates shall be within the limits given in 8.4.1.4.

8.4.1.4 The foam concentrate induction rate of a proportioner, expressed as a percentage of the foam solution flow (water plus foam concentrate), shall be minus 0 percent to plus 30 percent of manufacturer's listed induction rate, or 1 percentage point, whichever is less at listed flow rates.

8.4.1.4.1 For balanced pressure systems the minimum listed flow rate shall result in minimum percentage of manufacturer's requirement minus 0 percent.

8.4.1.4.2 For positive-pressure proportioning with pumps or pressure-controlled bladder tanks the percentage at minimum listed flow shall be at the maximum percentage of manufacturer's requirement plus 30 percent, or 1 percentage point, whichever is less.

Copyright National Fire Protection Association
Provided by IHS under license with NFPA
No reproduction or networking permitted without license from IHS
Not for Resale

8.4.1.4.3 For variable orifice type proportioners the percentage shall be minus 0 percent and plus 30 percent or 1 percentage point, whichever is less.

8.4.1.4.4 For balanced pressure and positive pressure proportioning systems, flow tests shall be permitted to be conducted through the test connections required in Section 5.13. For other proportioning system types, full-flow testing of system and discharge devices is required to properly evaluate the proportioning system.

8.4.1.4.5 Flow tests for wet pipe, dry pipe, and preaction systems shall be conducted at the low end of the listed design flow rate of the proportioning equipment and shall meet the criteria of 8.4.1.4.

8.4.1.5 When performing foam system proportioning tests the discharge foam solution shall be collected and disposed of by either the owner, the owner's representative, or the installing contractor in accordance with the requirements of the authority having jurisdiction.

8.4.1.6 Where approved by the authority having jurisdiction, simulated foam concentrates or alternative test systems shall be permitted to be substituted for actual foam concentrate, but system pressures and flows shall remain as described above and meet manufacturer's system requirements and recommendations.

8.4.2 Rate of Discharge.

8.4.2.1* The rate of foam solution discharge shall be computed from hydraulic calculations utilizing recorded inlet or end-of-system operating pressure, or both.

8.4.2.2 The foam concentration shall be calculated by timing a given displacement from the storage tank, a refractometric means, or a conductivity method.

8.4.3 Flushing the System.

8.4.3.1* After operation with foam, foam-water deluge and spray systems shall be flushed with water to remove foam residue.

8.4.3.2 Those portions of the system normally containing foam concentrate when the system is in service shall not be required to be flushed.

8.5 Instructions. The installing contractors shall provide the owner with the following:

(1) All literature and instructions provided by the manufacturer describing proper operation and maintenance of any equipment and devices installed
(2) Piping layout drawings, electrical schematics, and hydraulic calculations
(3) NFPA 25, *Standard for the Inspection, Testing, and Maintenance of Water-Based Fire Protection Systems*

Chapter 9 Inspection, Testing, and Maintenance

9.1* Inspection, Testing, and Maintenance of Foam-Water Sprinkler Systems.

9.1.1 Systems shall be so arranged that tests and inspections can be made without discharging foam solution to the system piping in order to check operation of all mechanical and electrical components of the system.

9.1.2 The system shall be arranged so that tests are performed with as little loss of foam concentrate as possible.

9.2 Testing and Inspection of Alarm and Detection Devices. Alarm and detection devices shall be tested and inspected in accordance with *NFPA 72, National Fire Alarm Code.*

9.3* Inspection, Testing, and Maintenance Frequency. Foam-water sprinkler systems shall be tested and inspected in accordance with NFPA 25, *Standard for the Inspection, Testing, and Maintenance of Water-Based Fire Protection Systems.*

Annex A Explanatory Material

Annex A is not a part of the requirements of this NFPA document but is included for informational purposes only. This annex contains explanatory material, numbered to correspond with the applicable text paragraphs.

A.1.1.2 For medium- and high-expansion foam, see NFPA 11, *Standard for Low-, Medium-, and High-Expansion Foam.*

A.1.2 The uses of foam (or mechanical foam, as it was first called) for fire protection have increased greatly since it was first used in the 1930s. Original applications of this agent utilized a proteinaceous-type foam-forming liquid concentrate delivered in water solution to a turbulence-producing foam generator or nozzle that then directed the mechanically formed foam to a burning fuel tank or area of burning flammable fuel. (Details of these and similar applications are found in NFPA 11, *Standard for Low-, Medium-, and High-Expansion Foam*, NFPA 402, *Guide for Aircraft Rescue and Fire-Fighting Operations*, and NFPA 403, *Standard for Aircraft Rescue and Fire-Fighting Services at Airports.*) As the technology for using this agent developed over the years, new systems and new devices for applying the foam to the hazard being protected and new foam-forming liquid concentrates were proven useful for fire protection purposes. The application of foam from overhead sprinkler-type systems using specially designed foam-making nozzles capable of either forming a foam from protein-type foam concentrate solutions or delivering a satisfactory water discharge pattern where supplied with water only was an early development (circa 1954) in foam fire protection. Protein, fluoroprotein, and aqueous film-forming concentrates or film-forming fluoroprotein foam concentrates (as defined in NFPA 11, *Standard for Low-, Medium-, and High-Expansion Foam*) are suitable for use with foam-water sprinklers. This latter type of foam concentrate also has been found to be suitable for use with standard sprinklers of the type referred to in NFPA 13, *Standard for the Installation of Sprinkler Systems*, where the system is provided with the necessary foam concentrate proportioning equipment. Care should be exercised to ensure that the choice of concentrate and discharge device are listed for use together.

NFPA 16 is based on available test data and design experience concerning the design information, installation recommendations, operating methods, and maintenance needs for the types of foam-water sprinkler systems previously described and foam-water spray systems utilizing protein, fluoroprotein, or aqueous film-forming foam or film-forming fluoroprotein foam concentrates. These systems possess the common ability to either discharge foam in a spray form or discharge water in a satisfactory pattern for fire protection purposes.

Copyright National Fire Protection Association
Provided by IHS under license with NFPA
No reproduction or networking permitted without license from IHS
Not for Resale

A.1.3.1 Caution should be exercised when auxiliary extinguishing equipment is used with these systems. Some extinguishing agents are incompatible with some foams. The manufacturers should be consulted.

Most foams are not considered suitable extinguishing agents on fires involving liquefied or compressed gases (e.g., butane, butadiene, propane, etc.); nor on materials that will react violently with water (e.g., metallic sodium) or that will produce hazardous materials by reacting with water; nor on fires involving electrical equipment where the electrical nonconductivity of the extinguishing agent is of first importance.

A.1.3.4 Several AFFF and FFFP concentrates have been listed with standard sprinklers for use on nonmiscible hydrocarbons such as heptane, gasoline, fuel oil, crude oils, and so forth, and therefore can be permitted to be used on these products. Polar solvents in depth, such as acetone, methyl ethyl ketone, methyl isobutyl ketone, methanol, ethanol, and isopropanol, have been successfully extinguished with special alcohol-type foam concentrates and standard sprinklers. In all cases, the agent to be used should be determined to be effective on the particular hazardous product by means of listing tests or special testing by the manufacturer where necessary. Application rates can be higher than the required 0.16 gpm/ft^2 (6.5 L/min·m^2) for some specific polar solvents.

A.1.3.5 See Annex E of NFPA 11, *Standard for Low-, Medium-, and High-Expansion Foam.*

A.3.2.1 Approved. The National Fire Protection Association does not approve, inspect, or certify any installations, procedures, equipment, or materials; nor does it approve or evaluate testing laboratories. In determining the acceptability of installations, procedures, equipment, or materials, the authority having jurisdiction may base acceptance on compliance with NFPA or other appropriate standards. In the absence of such standards, said authority may require evidence of proper installation, procedure, or use. The authority having jurisdiction may also refer to the listings or labeling practices of an organization that is concerned with product evaluations and is thus in a position to determine compliance with appropriate standards for the current production of listed items.

A.3.2.2 Authority Having Jurisdiction (AHJ). The phrase "authority having jurisdiction," or its acronym AHJ, is used in NFPA documents in a broad manner, since jurisdictions and approval agencies vary, as do their responsibilities. Where public safety is primary, the authority having jurisdiction may be a federal, state, local, or other regional department or individual such as a fire chief; fire marshal; chief of a fire prevention bureau, labor department, or health department; building official; electrical inspector; or others having statutory authority. For insurance purposes, an insurance inspection department, rating bureau, or other insurance company representative may be the authority having jurisdiction. In many circumstances, the property owner or his or her designated agent assumes the role of the authority having jurisdiction; at government installations, the commanding officer or departmental official may be the authority having jurisdiction.

A.3.2.3 Listed. The means for identifying listed equipment may vary for each organization concerned with product evaluation; some organizations do not recognize equipment as listed unless it is also labeled. The authority having jurisdiction should utilize the system employed by the listing organization to identify a listed product.

A.3.3.1 Discharge Device. The three principal types of discharge devices that are installed at the discharge outlets of the systems covered by this standard are as follows:

(1) Foam-water sprinklers
(2) Spray nozzles
(3) Standard sprinklers

Care should be exercised to ensure that the choice of foam concentrate and discharge device are listed for use together.

Foam-water sprinklers are specially designed, open-type, air-aspirating sprinklers consisting of an open barrel body foam maker that terminates in a deflector to shape the pattern of the foam or water issuing from the assembly. These devices produce water discharge patterns comparable to those of standard sprinklers. *(See NFPA 13, Standard for the Installation of Sprinkler Systems, where discharging at the same rates of flow.)*

Spray nozzles are open, directional spray nozzles. Where supplied with an approved foam solution such as AFFF, they discharge foam in a pattern peculiar to the discharge device. *(See NFPA 11, Standard for Low-, Medium-, and High-Expansion Foam, for specifics on application rates.)*

Standard sprinklers are sprinklers without heat-responsive elements, referred to in *NFPA 13, Standard for the Installation of Sprinkler Systems*, and they are non–air-aspirating. Where they are supplied with AFFF, air foam solution, or FFFP air foam solution, a foam discharge pattern is produced, closely conforming to the water discharge pattern of these sprinklers.

A.3.3.3 Foam. Air foam is made by mixing air into a water solution containing a foam concentrate, by means of suitably designed equipment. It flows freely over a burning liquid surface and forms a tough, air-excluding, continuous blanket that seals volatile combustible vapors from access to air. It resists disruption from wind and draft or heat and flame attack and is capable of resealing in case of mechanical rupture. Fire-fighting foams retain these properties for relatively long periods of time. Foams also are defined by expansion and are arbitrarily subdivided into three ranges of expansion. These ranges correspond broadly to certain types of usage described below. The three ranges are as follows:

(1) Low-expansion foam — expansion up to 20
(2) Medium-expansion foam — expansion from 20 to 200
(3) High-expansion foam — expansion from 200 to approximately 1000 [**11:** A.3.3.10]

A.3.3.5 Foam-Water Sprinkler System. These systems can be preprimed with foam solution. This solution would remain in the piping until the system is called upon to operate.

Preprimed systems could require draining, flushing, and repriming on a periodic basis *(see Section 9.3)*. This procedure will require an investment in both time and material and should be programmed into the total system operating cost.

A.3.3.5.1 Foam-Water Deluge System. Foam-water sprinklers are open-type sprinklers designed to do the following:

(1) Receive foam solution (water plus liquid concentrate)
(2) Direct the solution through an integral foam maker, the nozzle action of which breaks the solution into spray and discharges it into a mixing tube, where it combines with air drawn in through openings in the housing
(3) Provide mixing chamber capacity for development of the air foam

Copyright National Fire Protection Association
Provided by IHS under license with NFPA
No reproduction or networking permitted without license from IHS
Not for Resale

(4) Direct the formed foam discharging from the open end of the mixing tube against a deflector, shaped to distribute the foam in a pattern essentially comparable to the water distribution pattern of present-day standard sprinklers (nomenclature from NFPA 13, *Standard for the Installation of Sprinkler Systems*) and to do so with essentially no impingement of the foam on the ceiling
(5) Develop a water distribution pattern directly comparable to that of standard sprinklers, in the case of discharge of water only (i.e., in the absence of foam)

The normal direction of discharge from foam-water sprinklers is downward. To provide a choice in installation design, foam-water sprinklers are produced for installation in the upright position and in the pendent position with the pattern of discharge in either case in the downward direction. Sprinkler deflectors are formed to produce the required discharge pattern, which could mean differing shapes of deflectors for each of the two positions of installation. The variation in the shape of deflectors is illustrated in Figure A.3.3.5.1.

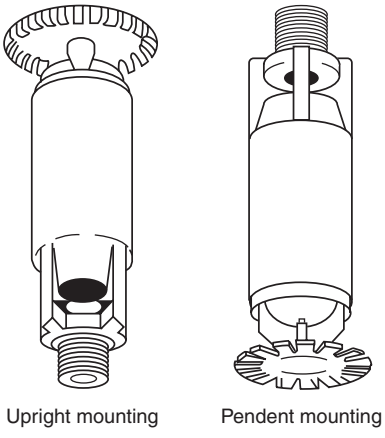

FIGURE A.3.3.5.1 Variations in Deflector Shape.

A.3.3.5.2 Foam-Water Dry Pipe System. Dry pipe systems are inherently slower in operation and have a tendency to develop internal scale. Since the foam solution would be proportioned into the system upon operation, the first discharge would be an effective foam. However, due to the slower operation, this should be considered the least desirable type of sprinkler system for closed-head foam-water sprinkler application.

A.3.3.5.3 Foam-Water Preaction System. These systems combine the features of both wet pipe and dry pipe systems. The piping is empty and might or might not contain air under low pressure for supervision of the piping. There is a separate detection system that operates the water control valve to release foam solution into the piping. (The actuating means of the valve is described in NFPA 13, *Standard for the Installation of Sprinkler Systems*.) This detection system should be more sensitive than the sprinkler elements.

With this arrangement, foam solution is usually released into the piping before the sprinklers operate so that, when they do, there is an immediate discharge, as with a wet pipe system. To ensure this discharge, supervision of the actuation system is recommended.

Foam solution would be proportioned into the system upon operation, so there is no need for prepriming. Overall response time generally approaches that of a wet pipe system. Actual time of foam discharge would depend on the type of separate detection system used and the type of fire. With a rapidly developing fire, the sprinklers might begin to operate very close to the initial operation of the separate detection system, and the piping might not have time to fill with foam solution to achieve immediate discharge. With a slowly developing fire, there would be sufficient time to fill the piping, and there would be a discharge of fresh foam upon sprinkler operation.

These systems are more complex than dry pipe and wet pipe systems, and this factor should be considered.

A.3.3.5.4 Foam-Water Spray System. Foam-water spray nozzles combine a foam maker with a body and a distributing deflector. They generate foam in the same manner described for foam-water sprinklers, where supplied with foam solution under pressure, and distribute the resulting foam, or water in the absence of foam solution, in a special pattern peculiar to the particular head.

Foam-water spray nozzles are available in a number of patterns with variations in discharge capacity. *(See Figure A.3.3.5.4.)*



FIGURE A.3.3.5.4 Foam-Water Spray Nozzle.

A.3.3.5.5 Preprimed System. These systems have the piping normally filled with foam solution so that there is an immediate discharge of solution when the sprinkler operates. They are the fastest, simplest, and most reliable of all types of sprinkler systems. Foam concentrates in solution will form sediment or can deteriorate where stored in system piping. Contact the manufacturer for guidance.

A.3.3.6 Foam Concentrate. For the purpose of this document, "foam concentrate" and "concentrate" are used interchangeably. [**11:** A.3.3.12]

A.3.3.6.1 Alcohol-Resistant Foam Concentrate. There are three general types. One is based on water-soluble natural polymers, such as protein or fluoroprotein concentrates, and also contains alcohol-insoluble materials that precipitate as an insoluble barrier in the bubble structure. The second type is based on synthetic concentrates and contains a gelling agent that surrounds the foam bubbles and forms a protective raft on the surface of water-soluble fuels; these foams can also have film-forming characteristics on hydrocarbon fuels. The third type is based on water-soluble natural polymers, such as fluoroprotein, and contains a gelling agent that protects the foam

Copyright National Fire Protection Association
Provided by IHS under license with NFPA
No reproduction or networking permitted without license from IHS
Not for Resale

from water-soluble fuels. This foam can also have film-forming and fluoroprotein characteristics on hydrocarbon fuels. Alcohol-resistant foam concentrates are generally used in concentrations of 3 percent to 10 percent solutions, depending on the nature of the hazard to be protected and the type of concentrate. [**11:** A.3.3.12.1]

A.3.3.6.2 Aqueous Film-Forming Foam Concentrate (AFFF). The foam formed acts as a barrier both to exclude air or oxygen and to develop an aqueous film on the fuel surface that is capable of suppressing the evolution of fuel vapors. The foam produced with AFFF concentrate is dry chemical compatible and thus is suitable for combined use with dry chemicals. [**11:** A.3.3.12.2]

A.3.3.6.3 Film-Forming Fluoroprotein Foam Concentrate (FFFP). This type of foam utilizes a protein base plus stabilizing additives and inhibitors to protect against freezing, corrosion, and bacterial decomposition, and it also resists fuel pickup. The foam is usually diluted with water to a 3 percent or 6 percent solution and is dry chemical compatible. [**11:** A.3.3.12.3.1]

A.3.3.6.4 Fluoroprotein Foam Concentrate. In addition to an air-excluding foam blanket, this concentrate also can deposit a vaporization-preventing film on the surface of a liquid fuel. It is diluted with water to form 3 percent to 6 percent solutions depending on the type. This concentrate is compatible with certain dry chemicals. [**11:** A.3.3.12.3]

A.3.3.6.5 Medium- and High-Expansion Foam Concentrate. This equipment can be air-aspirating or blower-fan type. [**11:** A.3.3.12.4]

A.3.3.6.6 Other Synthetic Foam Concentrate. In general, its use is limited to portable nozzle foam application for spill fires within the scope of their listings. The applicable listings should be consulted to determine proper application rates and methods. [**11:** A.3.3.12.6.1]

A.3.3.6.7 Protein Foam Concentrate. These concentrates are diluted with water to form 3 percent to 6 percent solutions depending on the type. They are compatible with certain dry chemicals. [**11:** A.3.3.12.5]

A.3.3.7 Foam Solution. For the purpose of this document, "foam solution" and "solution" are used interchangeably. [**11:** A.3.3.16]

A.4.4 The purpose of a reserve supply of concentrate is to have the means available for returning systems to service-ready condition following system operation.

A.4.4.2 See Section 5.3.

A.4.5 Most test work conducted with closed-head sprinklers has been performed with preprimed systems or systems where foam solution is discharged very quickly — in less than 1 minute. The inherent design philosophy is that foam solution is discharged rapidly on the fuel hazard. Where only water is in the sprinkler piping, the designer and the authority having jurisdiction should satisfy themselves that the foam solution delay time is acceptable for the given hazard. Factors to consider include the combustible/flammable liquid fuel hazard, associated ordinary combustibles, probable fire growth rate, number of sprinklers expected to operate, and the involvement of commodities at the time of foam discharge. Fire growth factors include flash point of the fuel, water miscibility, container package, and storage height.

Foam concentrate manufacturers generally do not recommend prepriming with foam solution where alcohol-type concentrates are used. The foam concentrate manufacturers should be consulted. The factors cited in the preceding paragraph should then be considered if the system is not preprimed with foam solution. *(See A.3.3.5 for draining and flushing guidance.)*

A.5.3.1 Foam concentrates meeting the requirements of 5.3.1 are available in 3 percent and 6 percent concentrations. Some foam concentrates are available for use at temperatures as low as –20°F (–29°C).

A.5.3.1.2 Oftentimes different brands of similar types of foam concentrates are found to be chemically compatible. However, before different types or brands of concentrates are mixed for long-term storage, evaluations should be made to determine compatibility. A number of parameters should be considered and evaluated before concentrates are mixed for storage. In addition to chemical compatibility, one should consider effects on proportioning and discharge hardware (many listings and approvals are very specific with regard to operating pressures, flow ranges, and materials of construction of hardware components). Fire performance and foam quality resulting from the admixture of two concentrates should be no worse than the individual concentrates used in the admixture. The application method should be the same for both foams being mixed. The system design application rate (density) might have to be changed if one of the foam concentrates being admixed is listed or approved at an application rate (density) that is higher than the one used for the initial design. This generally applies to alcohol-resistant foams since their listings and approvals are application rate sensitive.

A.5.3.3 Authorities having jurisdiction should be consulted as to the type of a reserve supply of foam concentrate. The purpose of a reserve supply of foam concentrate is to have available the means for returning systems to service-ready condition following system operation. This supply can be permitted to be in separate tanks or compartments, in drums or cans on the premises, or it could be permitted to be available from an outside source within 24 hours.

A.5.4.2 Figure A.5.4.2(a) through Figure A.5.4.2(h) are schematic arrangements of equipment illustrating the principle of operation of various proportioning methods. Other arrangements or components can be used to accomplish the same purpose.

The proportioning device selected should be capable of providing a nominal concentration of foam concentrate over the range of flows and pressures for the hazard being protected. Balanced-pressure proportioning systems utilizing foam concentrate pumps will tend to proportion at a higher percentage than anticipated when operating at low flow rates. However, diaphragm or bladder tank–type systems will proportion at a significantly reduced percentage at low flow rates and, therefore, should not be used below their minimum design flow range. *(See Section 8.3.)*

The foam liquid-concentrate metering orifice can be calculated by using the following formula:

$$Q_f = KCd^2\sqrt{\Delta P}$$

Copyright National Fire Protection Association
Provided by IHS under license with NFPA
No reproduction or networking permitted without license from IHS
Not for Resale

where:

Q_f = volume of foam liquid concentrate, gpm (L/min)
K = constant of particular foam liquid concentrate (available from the manufacturer)
C = orifice constant
d = diameter of orifice, in. (mm)
ΔP = pressure differential across the orifice plate, psi (bar)

The coefficient C is affected by several factors, including orifice shape, viscosity of foam liquid, velocity, and ratio of orifice diameter to pipe diameter.

A.5.4.3(3) In-line eductors (inductors) should be used only for open-head or deluge systems.

A.5.4.4 See A.5.4.2 for formula for calculation of size of orifices used in metering foam concentrates.

A.5.5 Foam concentrate pumps should have reliability equivalent to that of approved fire pumps. Foam concentrate pumps are generally of the positive displacement variety. Centrifugal pumps might not be suitable for use with foams exhibiting high viscosity characteristics. The foam equipment manufacturer should be consulted for guidance.

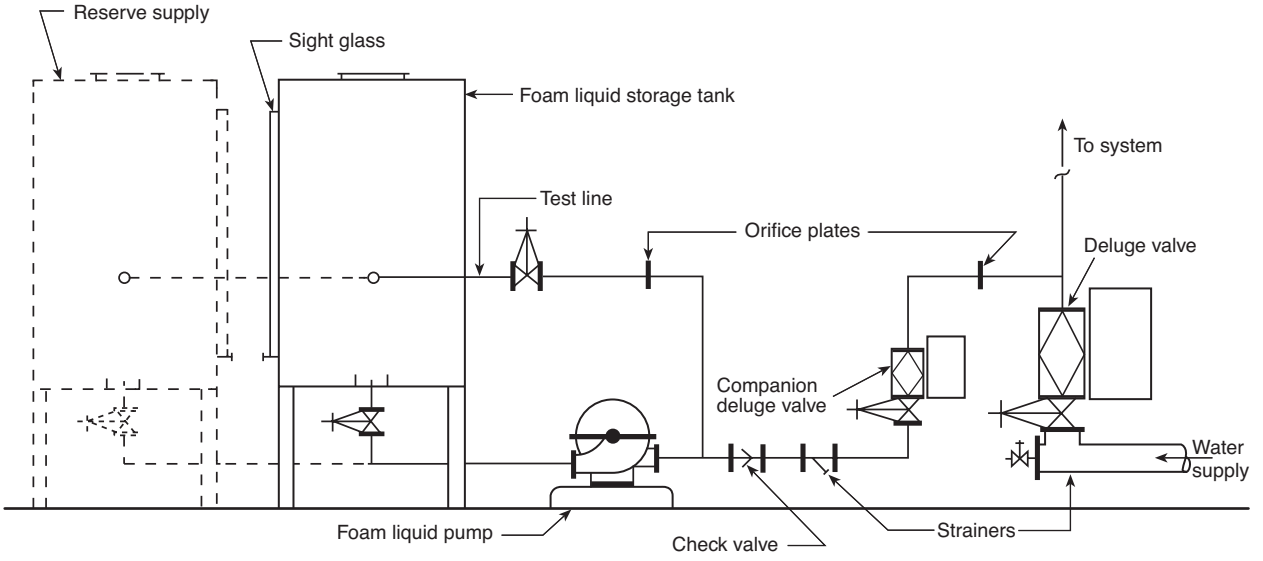

FIGURE A.5.4.2(a) Foam Liquid–Concentrate Storage Tank, Liquid-Concentrate Pump, Metering Proportioners, and Interconnecting Piping.

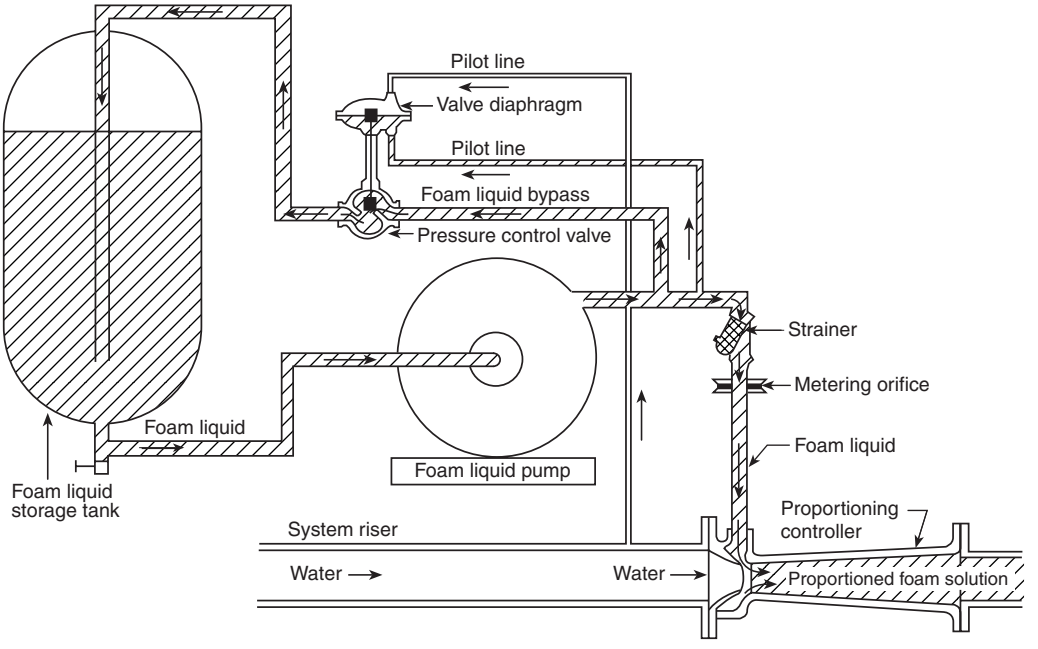

FIGURE A.5.4.2(b) Balanced-Pressure Proportioning System.

Copyright National Fire Protection Association
Provided by IHS under license with NFPA
No reproduction or networking permitted without license from IHS
Not for Resale

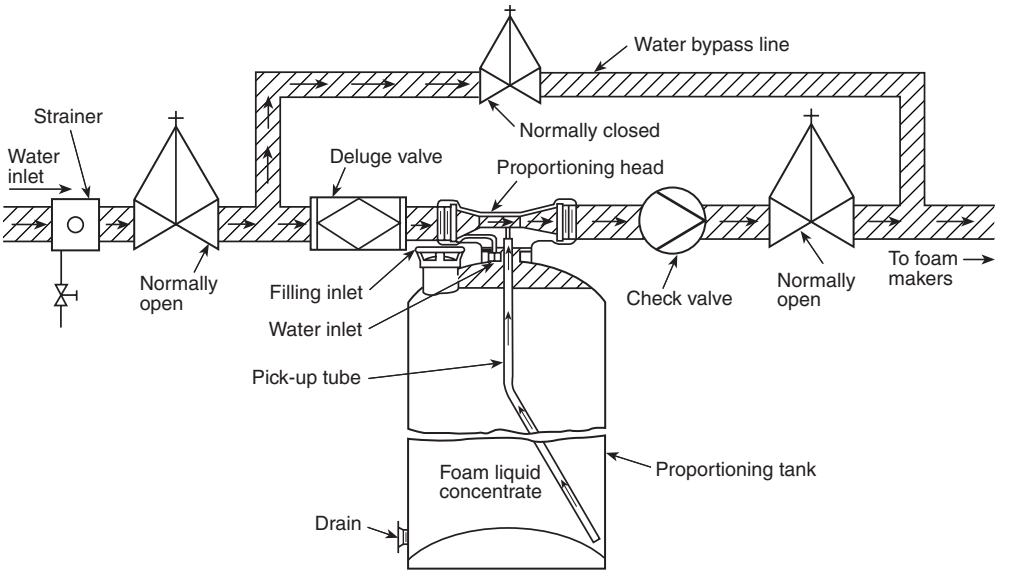

FIGURE A.5.4.2(c) Pressure Proportioning Tank Method (Pressure Proportioning Tank with Diaphragm). The arrangement of these devices can take a variety of forms. A single tank or a battery of tanks manifolded together can be used.

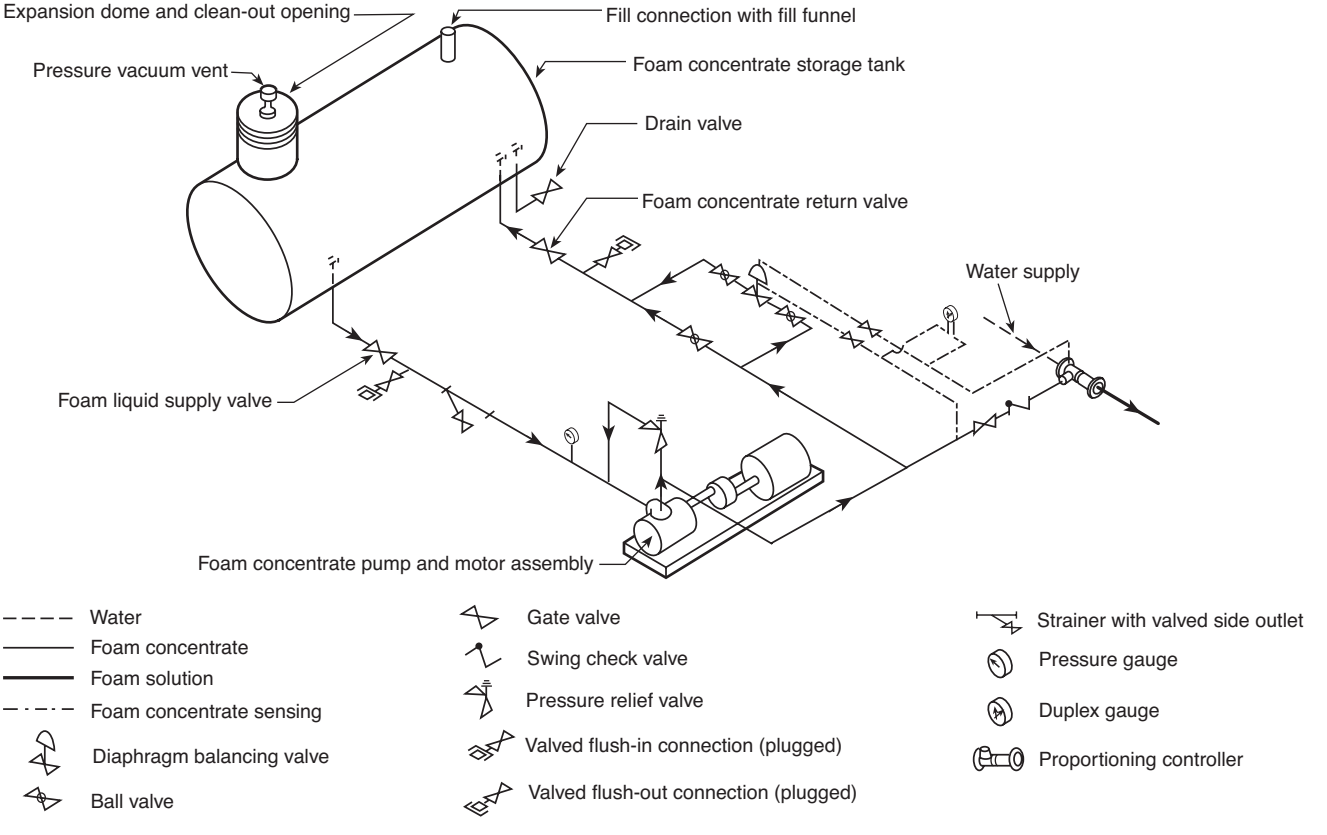

FIGURE A.5.4.2(d) Balanced-Pressure Proportioners (with Concentrate Pump).

Copyright National Fire Protection Association
Provided by IHS under license with NFPA
No reproduction or networking permitted without license from IHS
Not for Resale

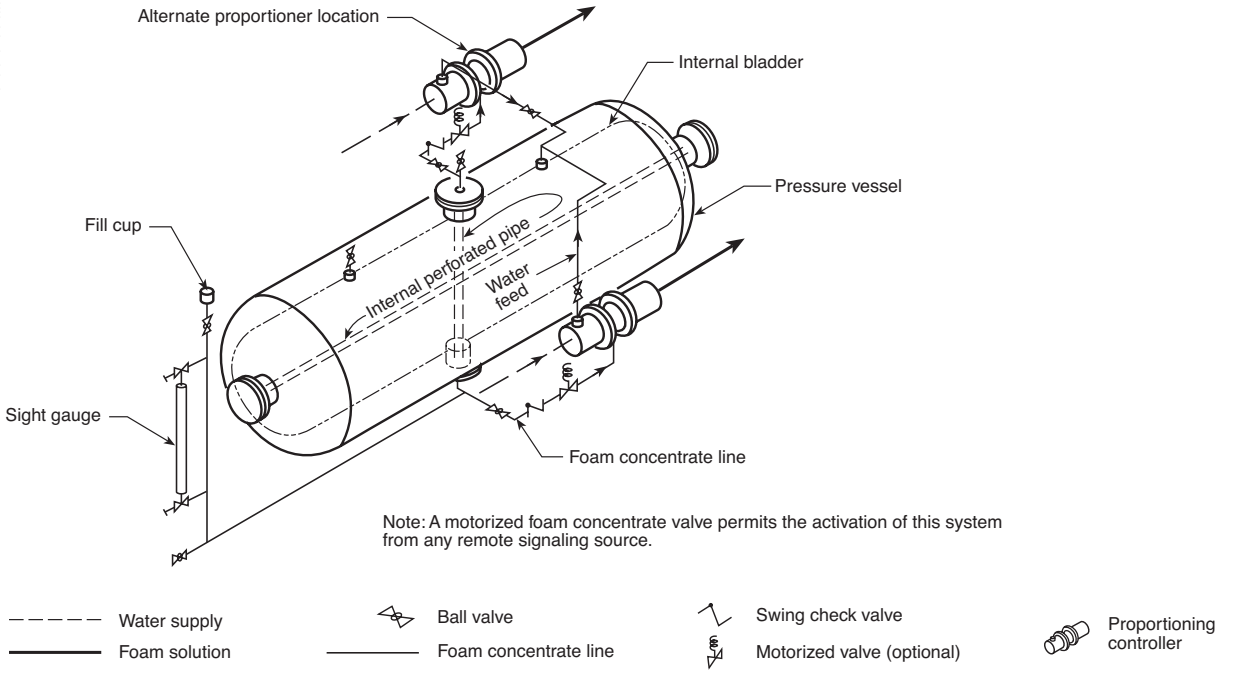

FIGURE A.5.4.2(e) Balanced-Pressure Proportioning (Bladder System).

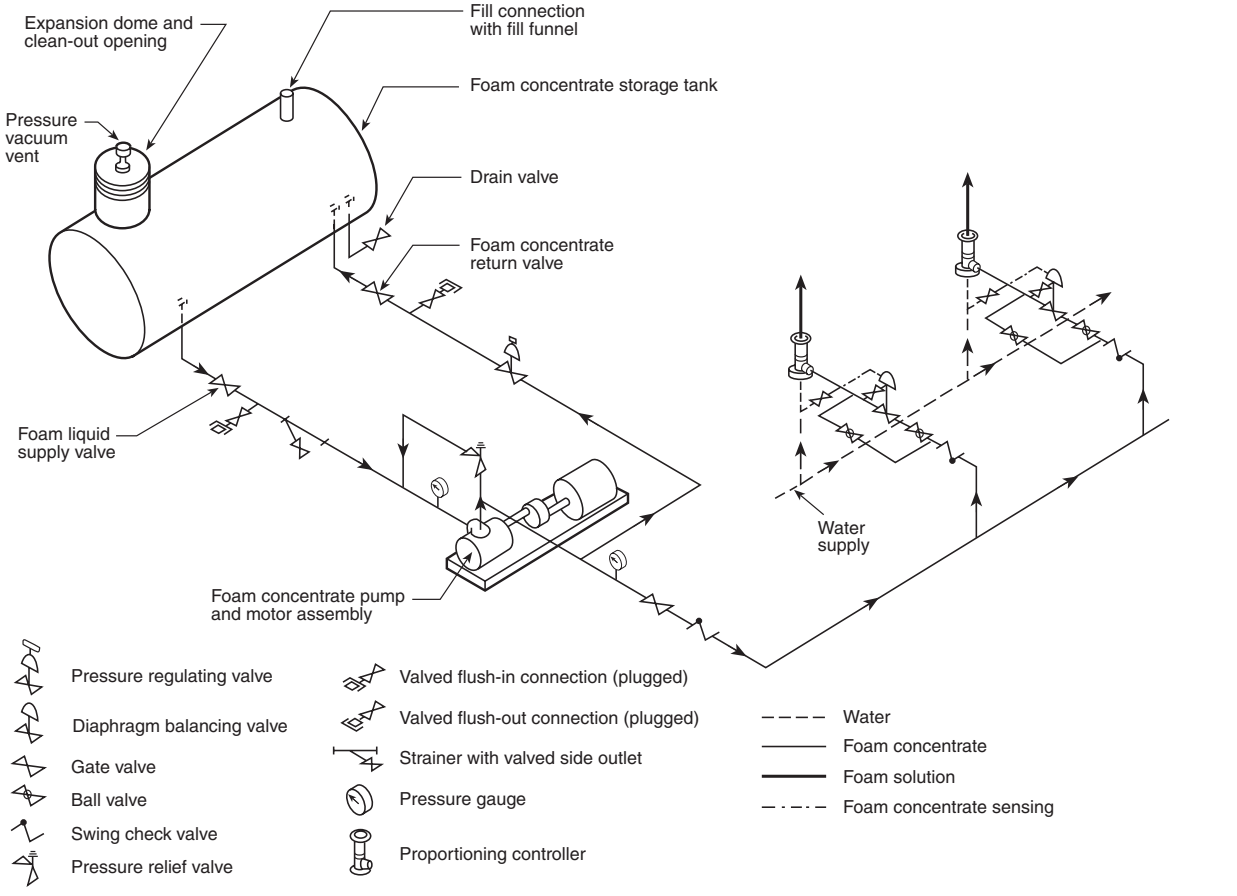

FIGURE A.5.4.2(f) In-Line Balanced-Pressure Proportioning System.

Copyright National Fire Protection Association
Provided by IHS under license with NFPA
No reproduction or networking permitted without license from IHS
Not for Resale

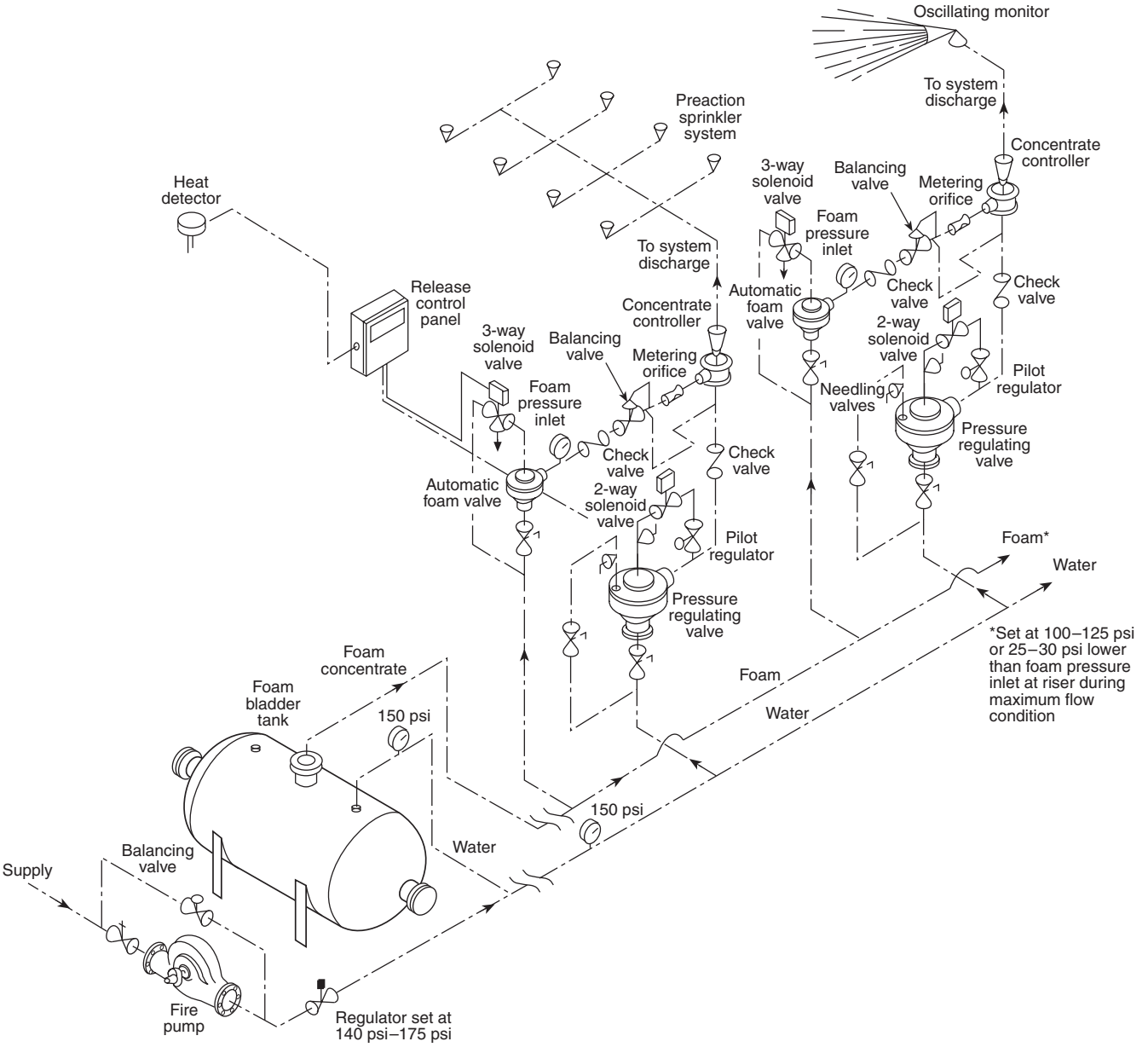

FIGURE A.5.4.2(g) In-Line Balanced-Pressure Proportioning System with Bladder Tank.

A.5.5.1.1 Foam concentrate pumps are generally of the positive displacement variety. Centrifugal pumps might not be suitable for use with foam concentrates exhibiting high viscosity characteristics. The foam equipment manufacturer should be consulted for guidance.

A.5.5.3.1 Any type of pump (such as a centrifugal or positive displacement pump) capable of overpressurizing the system should be provided with an adequate means of pressure relief.

A.5.5.4.1 Flushing of the foam concentrate pump might be necessary at periodic intervals or following complete discharge of concentrate.

A.5.7.3.4 Where sight glasses are used to gauge the foam concentrate level, they can indicate false levels if the more viscous foam concentrates are used.

A.5.7.4.1 Where sight glasses are used to gauge the foam concentrate level, they can indicate false levels if the more viscous foam concentrates are used.

A.5.8.2 Foam solutions react with steel pipe in such a way that, over a period of time, the foam solutions lose their capability to produce a fire-resistant foam. Therefore, in a wet pipe system, there could be a delay in the discharge of effective foam until all the preprimed solution has been flushed out and fresh foam solution reaches the opened sprinklers, unless corrective steps are taken.

A.5.8.3 Rubber-gasketed fittings subject to direct fire exposure are generally not suitable. Where necessary for piping flexibility or for locations subject to earthquake, explosion, or similar hazards, such installations can be permitted. In such cases, special hanging or bracing might be necessary.

Copyright National Fire Protection Association
Provided by IHS under license with NFPA
No reproduction or networking permitted without license from IHS
Not for Resale

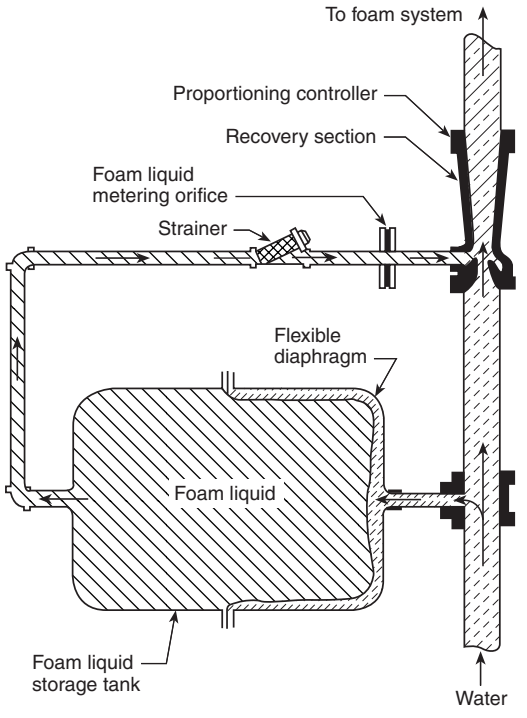

FIGURE A.5.4.2(h) Pressure Proportioning Tank with Diaphragm.

A.5.11.2 In bladder tank systems, the pressure drop created by the strainer can upset the foam and water pressure balance and can cause lean proportioning. Therefore, foam concentrate strainers are not recommended in bladder tank systems.

A.5.13.1 Many valves in the foam proportioning system, if left in an incorrect position, can compromise or even disable the foam proportioning system. Examples of valves critical to proper operation of the foam proportioning system that are intended to be supervised include, but are not limited to, valves in the supply from the foam concentrate storage tank, valves in the return to the storage tank, storage tank drain valves, strainer blow-off valves, foam concentrate pump supply and discharge valves, bypass valves around diaphragm valves or pressure-regulating valves, and valves at the inlet to the proportioner.

A.5.14 To provide a means of periodically checking the performance of the proportioners used in foam sprinkler systems, a test connection should be provided. Typical test connections are illustrated in Figure A.5.14. Two options are possible in locating the proportioning controller in the sprinkler riser: before the main sprinkler valve or after the main sprinkler valve. If the proportioning controller is located after the main sprinkler valve, an additional supervised OS&Y valve is needed to isolate the sprinkler overhead during the proportioner test. The test connection should be routed to a drain area for easy disposal of the solution produced during the test.

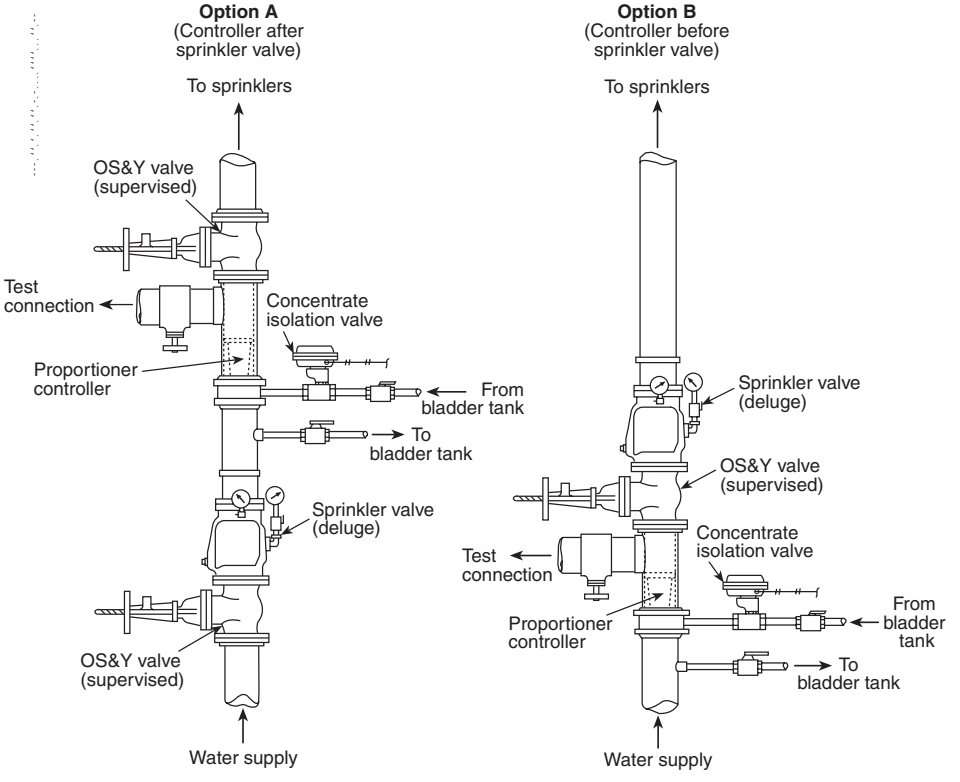

Note: Details typical of deluge sprinkler system with bladder-type proportioner.

FIGURE A.5.14 Test Connection Detail.

Copyright National Fire Protection Association
Provided by IHS under license with NFPA
No reproduction or networking permitted without license from IHS
Not for Resale

A.6.1 The fire-fighting efficiency of foams is not significantly affected by water temperatures between 35°F and 100°F (2°C and 38°C), although some reduction in expansion occurs with very cold water. If the temperature exceeds 100°F (38°C), however, foam stability and fire-fighting efficiency usually are reduced.

A.6.2.2 It should be ascertained if the installation of a listed backflow prevention assembly is required.

A.6.2.3.1 Local regulations might require a means for removal or retention of the largest flammable liquid spill plus the actual calculated flow from the maximum number of systems expected to operate for their calculated duration plus hose streams.

A.6.2.4 The purpose of the fire department connection is to supplement the water supply but not necessarily provide the entire sprinkler system demand. Fire department connections are not intended to deliver a specific volume of water. [**13:** A.6.8.1]

A.6.2.5.1 Wherever practicable, the fire department connection to the foam-water sprinkler system should be separate from the normal building fire sprinkler system. Signs and placards could be appropriate to alert the fire department.

A.7.3.1 For supervision of valves, refer to NFPA 24, *Standard for the Installation of Private Fire Service Mains and Their Appurtenances*. See NFPA occupancy standards, where applicable.

A.7.3.2 For protection of some flammable liquids, foam manufacturers might recommend application densities considerably higher than the minimum densities specified herein or by occupancy standards. These higher application densities generally are a result of specific fire tests performed on a particular fuel and should be considered in a system design.

Individual hazards might require minimum discharge pressures to adequately compensate for environmental effects such as wind. See NFPA 15, *Standard for Water Spray Fixed Systems for Fire Protection*, for additional information.

A.7.3.5.1 Where piping integrity is checked by pressurization from a jockey pump or other suitable means, care should be taken to prevent overpressurization of system components and piping. A suitable means of pressure relief should be provided if necessary.

A.7.3.8.1(A) The spacing of automatic detection equipment for systems installed for protection against fire exposure might call for an arrangement different from that required for other types of systems.

A.7.3.8.5 See NFPA 70, *National Electrical Code*, Chapter 5, particularly Article 500.

A.7.4.1.4 The friction losses in piping carrying foam concentrate can be calculated by using the Darcy formula.

For U. S. customary units:

Darcy formula:

$$\Delta P = 0.000216\left(\frac{fL\rho Q^2}{d^5}\right)$$

Reynolds number:

$$\Delta R = \frac{50.6Q\rho}{d\mu}$$

where:
ΔP = friction loss (psi)
f = friction factor
L = length of pipe (ft)
ρ = weight density of fluid (lb/ft^3)
Q = flow (gpm)
d = pipe diameter (in.)
R = Reynolds number
μ = absolute (dynamic) viscosity (cP)

For SI units:

Darcy formula:

$$\Delta P_m = 2.252\left(\frac{fL\rho Q^2}{d^5}\right)$$

Reynolds number:

$$\Delta R_e = 21.22\left(\frac{Q\rho}{d\mu}\right)$$

where:
ΔP_m = friction loss (bar)
f = friction factor
L = length of pipe (m)
ρ = density of fluid (kg/m^3)
Q = flow (L/min)
d = pipe diameter (mm)
R_e = Reynolds number
μ = absolute (dynamic) viscosity (cP)

A.7.4.2.2 Where the specified areas of demand are selected close to the source of supply, the higher available pressures can increase the flow beyond the capacity of the foam proportioning equipment.

A.7.4.2.3 Where excessive variations exist between calculated demand and available water supply, the actual excess discharge can exceed the capacity of the foam system to operate for the minimum 7-minute run time. A verification calculation should be made as follows:

Multiply the actual predicted system flow by the foam concentrate percentage, then divide this answer into the foam quantity as determined in 7.3.3.1. The time indicated should be 7 minutes or greater.

A.8.1 Underground mains and lead-in connections to system risers should be flushed through hydrants at dead ends of the system or through accessible aboveground flushing outlets, allowing the water to run until clear. If water is supplied from more than one source or from a looped system, divisional valves should be closed to produce a high-velocity flow through each single line.

It is recommended that foam concentrate lines be tested using foam concentrate as the testing medium.

A.8.2.1 To prevent the possibility of serious water damage in case of a break, pressure should be maintained during the 2-hour test period by a small-capacity pump, with the main controlling gate closed tightly during this period.

A.8.3.1 The following are acceptance test recommendations:

(1) All tests should be made by the contractor in the presence of the inspector for the authority having jurisdiction.
(2) Before asking for final approval of the protective equipment by the authority having jurisdiction, installation companies should furnish a written statement to the effect that the work covered by its contract has been completed and all specified flushing of underground, lead-in, and system piping has been successfully completed, to-

Copyright National Fire Protection Association
Provided by IHS under license with NFPA
No reproduction or networking permitted without license from IHS
Not for Resale

gether with specified hydrostatic pressure tests and system foam discharge tests.

(3) The samples of the contractor's material and test certificates for aboveground and underground piping that appear in Chapter 16 of NFPA 13, *Standard for the Installation of Sprinkler Systems*, can be useful to the contractor as a guide in filing written statements as described in A.8.3.1(2).

(4) Where full flow tests with foam cannot be performed for foam-water deluge systems, a full flow discharge test with water only and a test of component function to verify design capability should be considered. Where full discharge tests with water cannot be performed, a test of component function to verify design capability should be performed.

(5) Foams produced from foam-water discharge outlets are generally of lower expansion and faster drainage than foams from other foam-producing devices. Laboratory listing and test data demonstrate that satisfactory fire control and extinguishment of petroleum fuels can be achieved using foam-water sprinklers producing foam characteristics as in Table A.8.3.1.

Numerical values developed by use of the test methods referenced in Table A.8.3.1 are not directly comparable, so care should be taken to use the proper test method. In general, AFFF drains much more rapidly than protein and fluoroprotein foams, necessitating use of the alternate method.

Table A.8.3.1 Foam Expansion Drainage Time

Type of Foam	Expansion	25 Percent Drainage Time, Minimum (sec)
Protein foam and fluoroprotein foam	3:1 to 8:1	15
Aqueous film-forming foam	3:1 to 8:1	60

Note: Test data apply to foam characteristics determined by the method specified in Annex D of NFPA 11, *Standard for Low-, Medium-, and High-Expansion Foam.*

A.8.4 NFPA 16 is a standard for installation of foam-water fixed spray and sprinkler systems used as deluge open discharge devices (fixed nozzles or sprinklers) and closed systems utilizing heat-activated fusible sprinklers applied in wet pipe, dry pipe, or preaction-type systems. This standard includes the use of low-expansion foams such as aqueous film forming foam (AFFF) for hydrocarbon fuel, alcohol or water-miscible fuels using foams that are AFFF/ARC, and film forming fluoroprotein (FFFP) foams for use on hydrocarbon fuels. Foam concentrates are proportioned into the supply to the discharge system using several different methods of proportioning systems, depending on the type of application and the type of foam concentrate being applied. Also, different manufacturers include several different methods of proportioning their foam concentrates based on performance of the proportioning equipment and combination of use with different foam concentrates and equipment size restraints.

Past full-scale fire testing has shown that when applying foam-water solution of AFFF or AFFF/ARC foams through sprinklers or fixed spray nozzles, reduced application density and/or higher storage or quicker extinguishment is possible. Also, the systems allow for continued flow of water to be used for cooling after extinguishment of flammable or combustible fuel fires. If the installed proportioning equipment is insufficient to provide the proper foam-water mixture to the discharge system across the critical flow range of the system in a fire situation, then the system will fail to control the fire. The type of proportioning equipment is very critical to each application due to the type of discharge system, open sprinklers, and/or nozzles in deluge systems having a fixed discharge flow to system and closed sprinklers such as used in wet pipe, dry pipe, and preaction systems that include variable flow rate from initial fire to maximum design capacity of system. The type of foam concentrate also plays an important role in the system performance where AFFF and FFFP foams have a low viscosity close to water and AFFF/ARC foams, which have a very high viscosity close to molasses.

Proportioning systems provided by many manufacturers that are applied in accordance with this standard require that they must be listed with a third party laboratory agency with all the foam concentrates with which they are desired to be applied. The UL 162 foam standard, *Standard for Safety for Foam Equipment and Liquid Concentrates*, is utilized in most cases for this listing, of which all proportioning devices are tested under full-scale flow conditions to determine the minimum and maximum flow rate of each device and all sizes at which the proportioning percentage of the foam concentrate meets the allowed variance of plus 30 percent or 1 percentage point, whichever is smallest, above the manufacturer's specified percentage of foam-to-water mixture and minus 0 for minimum percentage of foam-water mixture. In addition, all foam concentrates must be flow tested for proportioning performance in one configuration size at the minimum allowed storage temperature to verify that the foam can be proportioned to within 85 percent or greater than at ambient temperature. This testing provides the mechanics of each type of system to determine the performance at minimum and maximum flow ranges of the equipment with each type of foam concentrate. Also, this testing can determine the performance that is critical for the type of system and the type of foam concentrate being applied.

The listed types of proportioning systems available include the following:

(1) Vacuum induction, where a venturi device, called an inductor, decreases the pressure in the foam concentrate proportioning inlet tube to the system flow passageway to below the atmospheric pressure in which the foam is pushed by atmospheric pressure through a calibrated orifice. This type of system requires a fixed discharge flow that matches the flow capacity of the inductor device. The supply pressure and backpressure of the discharge side of the system are very critical for proper operation of this type of system. This system is limited to deluge systems, and the friction loss of the discharge system to the discharge devices must be considered for proper performance. Proportioning percentage can vary based on the discharge and supply characteristics as well as the foam concentrate. These systems require full system discharge flow testing to determine proper installation and sizing.

(2) Foam concentrate pump discharging foam through a metering orifice directly into the discharge system through a metering orifice specifically sized for the system performance that is being installed. The foam pump discharge pressure must be higher than the system discharge pressure at a predetermined value. This type of system is limited to deluge-type systems and must be flow tested at the desired maximum flow

Copyright National Fire Protection Association
Provided by IHS under license with NFPA
No reproduction or networking permitted without license from IHS
Not for Resale

rate of the system. Each installation must be full system flow tested due to specific design parameters for a particular installation.

(3) Balanced pressure proportioning using foam pump or bladder tank. This type of system uses a modified venturi proportioning device in the system water supply pipe. The water flow to the system through the modified venturi causes a metered pressure drop in the foam concentrate inlet chamber. As the flow increases, the metered pressure loss increases, causing increased flow of foam concentrate through a calibrated orifice into the system water supply. With a foam pump system a balancing valve is used to measure the supply pressure at the inlet of the modified venturi proportioner and balance the foam concentrate pressure down to equal that pressure. This is accomplished by causing the foam concentrate to bypass through the balancing valve back to the foam atmospheric storage tank and by keeping the foam concentrate supply at the same inlet pressure as the water supply. When using a bladder tank the foam concentrate is stored inside a bladder within a pressure vessel where the supply water in the system supply is directed to the outside of the bladder, causing the foam concentrate to push out from the top or bottom of the tank and travel to the inlet of the modified venturi device. As the water pressure increases or decreases due to flow conditions, so does the foam concentrate pressure. In both the balanced pump system and the bladder tank system, when the inlet pressures of both foam concentrate and water supply match the inlet calibrated orifice of the modified venturi device, the proper mixture of foam to water as specified by the manufacturer is provided. All manufacturers publish a minimum and maximum flow for each size device for each foam concentrate listed with each device. When the minimum flows for these systems are given, the percentage of foam concentrate to water is at the minimum. For flow rates less than those published as minimum the foam-to-water percentage is less than the specified percentage. Also, the maximum flow is established at the maximum flow allowed for the system using the specified device and size. For these types of systems AFFF and FFFP foams will generally have a low flow rate per given size of supply device, compared to ARC foams that will have as high a flow rate as the minimum flow for the same given size as AFFF devices. The minimum flow of the most remote (4) sprinklers must be considered as the minimum flow rate of the system when using closed-type sprinkler systems. This is a common result of many full-scale fire tests. The riser size will need to be determined for supply of the proper foam percentage, or a different proportioning system should be used. These types of systems should be flow tested at the minimum listed flows as given by the manufacturer. For both deluge and closed systems, if the percentage of foam to water is at the desired percentage at the minimum flow rate as listed, this demonstrates that the equipment has been properly installed. A mid-range flow might also be desired to indicate a higher percentage of foam mixture at the higher flow rate to indicate proper design. Also, these systems allow for system isolation test valves to be applied and divert test foam solution flow to a containment area that can be easily disposed of.

(4) Positive-pressure proportioning using foam pump or pressure-controlled bladder tank system uses a system that supplies foam concentrate to a modified venturi at a higher pressure than the supply water pressure. The modified venturi includes a calibrated orifice that is sized to match the system equipment and the foam concentrate being used. These systems also include a balancing valve that senses the water supply pressure and balances the foam supply pressure down to equal the supply water pressure at all flow points. These systems are usually designed to supply the foam concentrate pressure at 15 to 30 psi (1 bar to 2 bar) higher than the water supply pressure to the system. This type of system also is specified with minimum and maximum flow rates for each proportioner size and foam concentrate type. At the listed minimum flow rates of these types of systems the foam percentage is at the maximum listed percentage, and for flows less than the minimum listed the foam concentrate ratio to water percentage increases. This provides rich foam at low flow rates for (4) sprinklers or fewer flows, which is desirable for closed sprinkler systems and where multiple riser systems and variable pressure might exist. Also, where ARC-type foam concentrates are applied this type of system is required for closed sprinkler systems or the system must be broken up into smaller riser sizes using smaller proportioners that meet the required (4) sprinklers flow requirements. These systems provide the best flexibility for multiple risers, variable pressures, and ARC closed sprinklers systems. Proportioner systems testing for these types of systems should include the minimum flow of the system using as a minimum (4) sprinklers nozzle flow rate to see if the foam concentrate proportioning is at least equal to the percentage specified plus 30 percent if at the minimum listed flow or if less than the minimum listed flow the percentage should be greater than the specified maximum percentage. In addition to the minimum flow rate, a test should be performed at a flow rate just above the minimum listed flow rate to determine that the proportioner will perform within its desired limits. These types of systems can also have and are recommended to have a system isolation valve and discharge test connection to perform flow testing and to direct foam solution to a containment area that can use a controlled disposal method.

Foam-water sprinkler systems have been applied for many years and have been shown to provide control and extinguishment capabilities of highly hazardous flammable and combustible liquids both in process and in storage. In order to guarantee that the system is designed and installed properly for the application for which it was intended, it is imperative that verification is made that the foam being discharged meets the intent of the system and the listed performance of the product. Most of these systems are installed at the job site, and in order to make sure all correct equipment and proper foam concentrate for the protection has been installed properly and in the correct arrangement the systems require at a minimum the performance test that indicates performance as specified under the listings of the products. Also, this makes sure all components are installed in their proper orientation and pressure settings. It is desired to note performance of installation at new commissioning of the installation and then compare in future testing done annually to flag any potential equipment problems.

In these types of systems, if the foam proportioning is inadequate as listed with each product, then the result is equal to shutting off the supply water of a sprinkler system.

In recent years stewardship of disposal is required for AFFF foam solution in non-fire situations as well as in large fire situations to protect from contamination of environment. In order to minimize foam solution flow testing and causing large disposal problems while still providing insurance of proper system and equipment performance, minimizing foam system flow to that described above will provide confidence in system performance, and by utilizing test and discharge containment practices in the system disposal problems will be minimized. These practices will provide proper stewardship of protecting the environment while providing properly installed and designed systems.

--`,,```,,,,````-`-`,,`,,`,`,,`---

Copyright National Fire Protection Association
Provided by IHS under license with NFPA
No reproduction or networking permitted without license from IHS

Not for Resale

A.8.4.2.1 See Annex B.

A.8.4.3.1 Particular attention should be given to strainers or other small openings.

A.9.1 To provide a means of periodically checking the performance of the proportioners used in foam sprinkler systems, a test connection should be provided. Typical test connections are illustrated in Figure A.5.14. Two options are possible in locating the proportioning controller in the sprinkler riser: before the main sprinkler valve or after the main sprinkler valve. If the proportioning controller is located after the main sprinkler valve, an additional supervised OS&Y valve is needed to isolate the sprinkler overhead during the proportioner test. This is done to eliminate the problems caused by air cushions in wet pipe sprinkler systems or the servicing delays caused during charging and draining of preaction or deluge sprinkler systems. The test connection should be routed to a drain area for easy disposal of the solution produced during the test. The manufacturer's test procedures should be followed closely.

A.9.3 An inspection contract for the equipment service tests and operation at regular intervals is recommended.

Samples of foam liquid concentrate should be referred to the manufacturer to check its condition annually.

Samples should be submitted in accordance with the manufacturer's recommended sampling procedure.

Annex B Foam Solution Concentration Determination

This annex is not a part of the requirements of this NFPA document but is included for informational purposes only.

B.1 Conductivity Method. This method is based on changes in electrical conductivity as foam concentrate is added to water. A handheld conductivity meter is used to measure the conductivity of foam solutions in microsiemens units. Conductivity is a very accurate method, provided there are substantial changes in conductivity as foam concentrate is added to the water in relatively low percentages (i.e., 1 percent, 3 percent, or 6 percent). Since salt or brackish water is very conductive, this method might not be suitable due to small conductivity changes as foam concentrate is added. It will be necessary to make foam and water solutions in advance to determine if adequate changes in conductivity can be detected if the water source is salty or brackish.

B.1.1 Equipment Required. Prepare a base (calibration) curve using the following apparatus:

(1) Four 100 mL plastic bottles with caps
(2) One 10 mL measuring pipette or 10 cc syringe
(3) One 100 mL graduated cylinder
(4) Three plastic-coated magnetic stirring bars
(5) One portable temperature-compensated conductivity meter — Omega Model CDH-70, VWR Scientific Model 23198-014, or equivalent
(6) Standard graph paper
(7) Ruler or other straightedge

B.1.2 Procedure. Using the water and foam concentrate from the system to be tested, make up three standard solutions using the 100 mL graduated cylinder. These samples should include the nominal intended percentage of injection, the nominal percentage plus 1 or 2 percentage points, and the nominal percentage minus 1 or 2 percentage points. Place the water in the 100 mL graduated cylinder (leaving adequate space for the foam concentrate) and then carefully measure the foam concentrate samples into the water using the syringe. Use care not to pick up air in the foam concentrate samples. Pour each measured foam solution from the 100 mL graduated cylinder into a 100 mL plastic bottle. Each bottle should be marked to indicate the percent solution it contains. Add a plastic stirring bar to the bottle, cap it, and shake thoroughly to mix the foam solution.

After making the three foam solutions in this manner, measure the conductivity of each solution. Refer to the instructions that come with the conductivity meter to determine proper procedures for taking readings. It will be necessary to switch the meter to the correct conductivity range setting to obtain a proper reading. Most synthetic-based foams used with freshwater will result in foam solution conductivity readings of less than 2000 microsiemens. Protein-based foams will generally produce conductivity readings in excess of 2000 in freshwater solutions. Due to the temperature compensation feature of the conductivity meter, it can take a short time to obtain a consistent reading.

Once the solution samples have been measured and recorded, set the bottles aside for control sample references. The conductivity readings should then be plotted on the graph paper. It is most convenient to plot the foam solution percentage on the horizontal axis and conductivity readings on the vertical axis.

Use a ruler or straightedge to draw a line that approximates connecting all three points. Although it might not be possible to hit all three points with a straight line, they should be very close. If not, repeat the conductivity measurements and, if necessary, make new control sample solutions until all three points plot in a nearly straight line. This plot will serve as the known base (calibration) curve to be used for the test series.

B.1.3 Sampling and Analysis. Collect foam solution samples from the proportioning system, using care to ensure the sample is taken at an adequate distance downstream from the proportioner being tested. Using foam solution samples that are allowed to drain from expanded foam can produce misleading conductivity readings and, therefore, is not recommended.

Once one or more samples have been collected, read their conductivity and find the corresponding percentage from the base curve prepared from the control sample solutions.

B.2 Foam Solution Concentration Determination. This test is used to determine the percent concentration of a foam concentrate in the water being used to generate foam. It is typically used as a means of determining the accuracy of a system's proportioning equipment. If the level of foam concentrate injection varies widely from design, it could abnormally influence the expansion and drainage foam quality values, which could influence the foam's performance during a fire.

There are two acceptable methods for measuring foam concentrate percentage in water. Both methods are based on comparing foam solution test samples to premeasured solutions, which are plotted on a baseline graph of percent concentration versus instrument reading.

B.3 Refractive Index Method. *[See Figure B.3(a) and Figure B.3(b).]* A handheld refractometer is used to measure the refractive index of the solution samples. This method is not particularly accurate for AFFF or alcohol-resistant foams, since they typically exhibit very low refractive index readings. For this reason, the conductivity method might be preferred when these products are used. *[See Figure B.3(a) through Figure B.3(d).]*

Copyright National Fire Protection Association
Provided by IHS under license with NFPA
No reproduction or networking permitted without license from IHS
Not for Resale

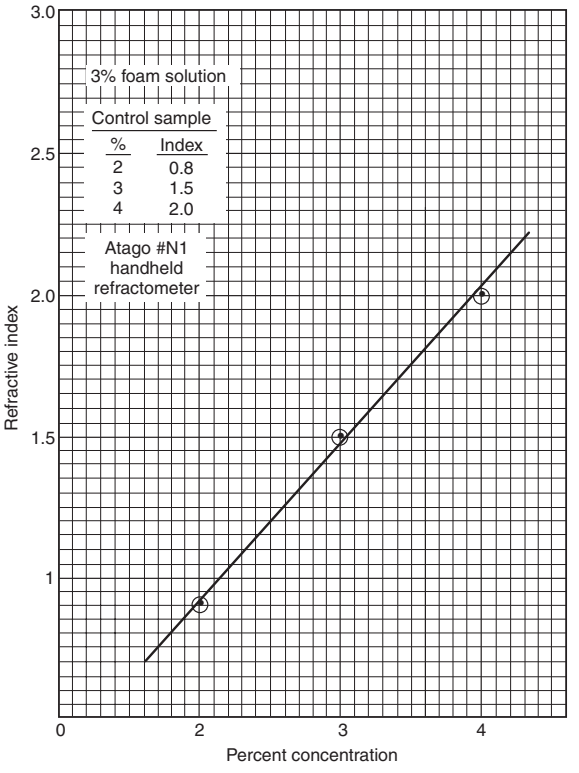

FIGURE B.3(a) Refractive Index vs. Concentration — Handheld Refractometer.

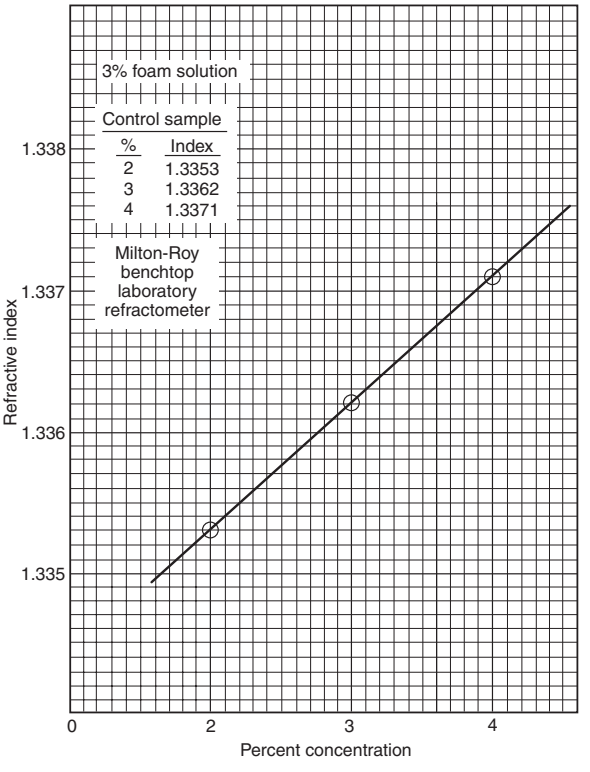

FIGURE B.3(b) Refractive Index vs. Concentration — Laboratory Refractometer.

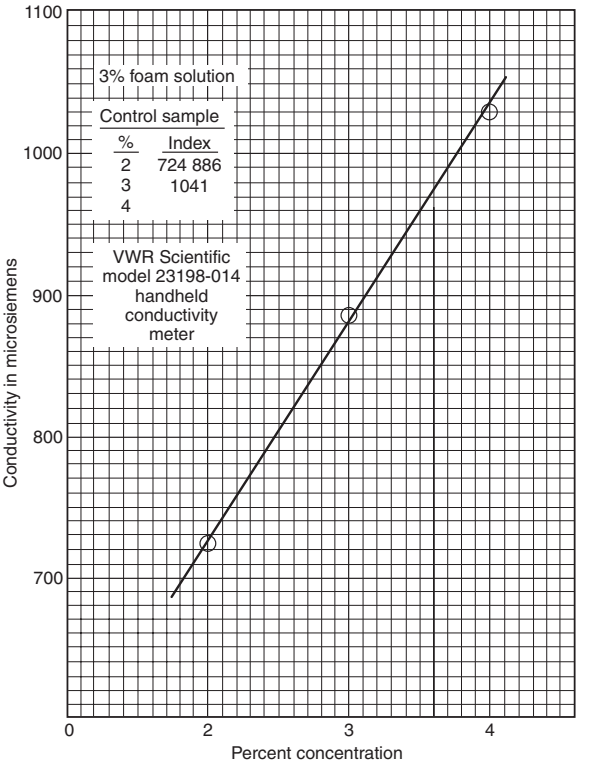

FIGURE B.3(c) Conductivity vs. Concentration — Handheld Conductivity Meter.

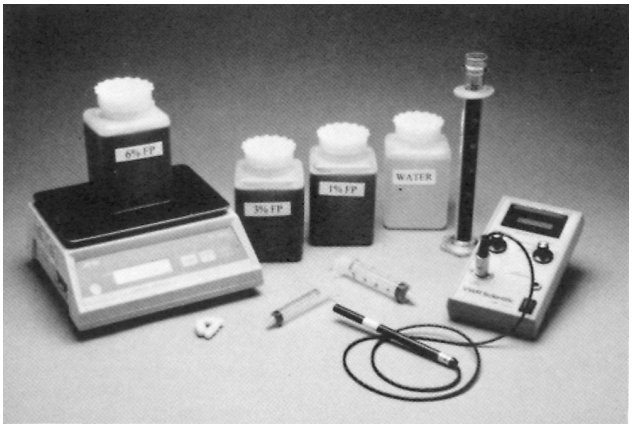

FIGURE B.3(d) Sampling Equipment and Samples for FFFP Concentration Test.

B.3.1 Equipment Required. A base (calibration) curve is prepared using the following apparatus:

(1) Four 100 mL plastic bottles with caps
(2) One 10 mL measuring pipette or 10 cc syringe
(3) One 100 mL graduated cylinder
(4) Three plastic-coated magnetic stirring bars
(5) One handheld refractometer — American Optical Model 10400 or 10441, Atago #N1, or equivalent
(6) Standard graph paper
(7) Ruler or other straightedge

Copyright National Fire Protection Association
Provided by IHS under license with NFPA
No reproduction or networking permitted without license from IHS
Not for Resale

B.3.2 Procedure. Using the water and foam concentrate from the system to be tested, make up three standard solutions using the 100 mL graduated cylinder. These samples should include the nominal intended percentage of injection, the nominal percentage plus 1 or 2 percentage points, and the nominal percentage minus 1 or 2 percentage points. Place the water in the 100 ml graduated cylinder (leaving adequate space for the foam concentrate) and then carefully measure the foam concentrate samples into the water using the syringe. Use care not to pick up air in the foam concentrate samples. Pour each measured foam solution from the 100 mL graduated cylinder into a 100 mL plastic bottle. Each bottle should be marked to indicate the percent solution it contains. Add a plastic stirring bar to the bottle, cap it, and shake thoroughly to mix the foam solution.

After thoroughly mixing the foam solution samples, take a refractive index reading of each percentage foam solution sample. This is done by placing a few drops of the solution on the refractometer prism, closing the cover plate, and observing the scale reading at the dark yield intersection. Since the refractometer is temperature compensated, it can take 10 to 20 seconds for the sample to be read properly. It is important to take all refractometer readings at ambient temperatures of 50°F (10°C) or above.

Using standard graph paper, plot the refractive index readings on one axis and the percent concentration on the other. The resulting plotted curve will serve as the known baseline for the test series. Set the solution samples aside in the event the measurements need to be checked.

B.3.3 Sampling and Analysis. Collect foam solution samples from the proportioning system, using care to ensure the samples are taken at an adequate distance downstream from the proportioner being tested. Take refractive index readings of the samples and compare them to the plotted curve to determine the percentage of the samples.

Annex C Informational References

C.1 Referenced Publications. The documents or portions thereof listed in this annex are referenced within the informational sections of this standard and are not part of the requirements of this document unless also listed in Chapter 2 for other reasons.

C.1.1 NFPA Publications. National Fire Protection Association, 1 Batterymarch Park, Quincy, MA 02169-7471.

NFPA 11, *Standard for Low-, Medium-, and High-Expansion Foam*, 2005 edition.

NFPA 13, *Standard for the Installation of Sprinkler Systems*, 2007 edition.

NFPA 15, *Standard for Water Spray Fixed Systems for Fire Protection*, 2007 edition.

NFPA 24, *Standard for the Installation of Private Fire Service Mains and Their Appurtenances*, 2007 edition.

NFPA 70, *National Electrical Code®*, 2005 edition.

NFPA 402, *Guide for Aircraft Rescue and Fire-Fighting Operations*, 2002 edition.

NFPA 403, *Standard for Aircraft Rescue and Fire-Fighting Services at Airports*, 2003 edition.

C.1.2 Other Publications.

C.1.2.1 UL Publications. Underwriters Laboratories Inc., 333 Pfingsten Road, Northbrook, IL 60062-2096.

UL 162, *Standard for Safety for Foam Equipment and Liquid Concentrates*, 1994.

C.2 Informational References. The following documents or portions thereof are listed here as informational resources only. They are not a part of the requirements of this document.

NFPA 18, *Standard on Wetting Agents*, 2006 edition.

C.3 References for Extracts in Informational Sections.

NFPA 11, *Standard for Low-, Medium-, and High-Expansion Foam*, 2005 edition.

Copyright National Fire Protection Association
Provided by IHS under license with NFPA
No reproduction or networking permitted without license from IHS
Not for Resale

Index

Copyright © 2007 National Fire Protection Association. All Rights Reserved.

The copyright in this index is separate and distinct from the copyright in the document that it indexes. The licensing provisions set forth for the document are not applicable to this index. This index may not be reproduced in whole or in part by any means without the express written permission of NFPA.

-A-

Acceptance tests ..... Chap. 8
Actuation circuitry, supervision of 5.13.2
AFFF concentrate .....*see* Aqueous film-forming foam concentrate (AFFF)
Air-aspirating devices 5.2.2
Aircraft hangers, water supplies for 6.2.3.2
Alarms 5.10
  Supervisory systems 5.13, A.5.13.1
  Testing of 9.2
Alcohol-resistant foam concentrate (definition) 3.3.6.1, A.3.3.6.1
Application of standard ..... 1.3, A.1.3.1 to A.1.3.5
Approvals 4.6, 5.1
Approved (definition) 3.2.1, A.3.2.1
Aqueous film-forming foam concentrate (AFFF) A.1.2, A.1.3.4, A.8.4
  Definition 3.3.6.2, A.3.3.6.2
Around-the-pump proportioners ..... 5.4.3(2)
Atmospheric-type storage tanks 5.7.3, A.5.7.3.4
Authority having jurisdiction
  Approvals by 4.6.1, 4.6.2
  Definition 3.2.2, A.3.2.2
  Disposal of foam concentrates, requirements for 8.4.1.5
  Fire department connections designated by 6.2.4.1
Automatic operation ..... 4.1.1, 6.2.1, 7.3.8, A.7.3.8.1(A), A.7.3.8.5

-B-

Balanced pressure proportioning ..... 5.4.1 to 5.4.3, 8.4.1.1.1, 8.4.1.4, A.5.4.2, A.5.4.3(3), A.8.4

-C-

Class A fires .....*see* Fires
Class B fires .....*see* Fires
Components, system ..... Chap. 5
Compressed gas 1.3.3, A.1.3.1
Connections
  Flushing ..... 8.1.1, A.8.1; *see also* Fire department connections
  Test 5.14, A.5.14
Controllers, foam concentrate pumps 5.6
Control of fire 1.3.2.3

-D-

Definitions ..... Chap. 3
Deluge systems .....*see* Foam-water deluge systems
Design, system .....*see* System design
Detection systems
  Automatic system detection
    Foam-water deluge systems ..... 5.12.1, 7.3.8.3 to 7.3.8.5
    Foam-water preaction systems 5.12.1
  Foam-water deluge systems A.7.3.8.5
  Foam-water preaction systems A.3.3.5.3
  Supervision of 5.13.2, 7.3.8.3
  Testing and inspection of 9.2
Devices and materials, approved ... 4.6, 5.1; *see also* Discharge devices
Discharge
  Densities .....*see* Foam-water density
  Dual agent 1.3.1, A.1.3.1
  Periods 4.3, 5.3.2, 7.3.3
  Rate 5.3.2, 6.2.1.1, 6.2.3, 8.4.1.3, 8.4.1.4, 8.4.2, A.6.2.3.1, A.8.4.2.1
    Definition 3.3.9
  Testing 8.3, A.8.3.1
  Of water .....*see* Water supplies
Discharge devices 1.3.2.1, 1.3.2.2, 5.2, A.1.3.4, A.8.4
  Compatibility 5.3.1, A.5.3.1
  Definition 3.3.1, A.3.3.1
  Foam-water deluge systems A.3.3.5.1
  Foam-water spray system A.3.3.5.4
  Preprimed systems A.4.5
  Spacing of 7.3.7.2
  Temperature rating 7.3.7.4
Discharge rate 1.3.2.1
Drainage 7.3.6
Drivers, foam concentrate pumps 5.6
Dry-pipe systems .....*see* Foam-water dry pipe systems

-E-

Electrical equipment fires 1.3.3, A.1.3.1
Equivalency to standard 1.5
Exposure protection 1.3.2.3
Extinguishment 1.3.2.1

-F-

Film-forming fluoroprotein foam concentrate (FFFP) A.1.2, A.1.3.4, A.8.4
  Definition 3.3.6.3, A.3.3.6.3
Fire department connections 6.2.4, 6.2.5, A.6.2.5.1
Fire prevention 1.3.2.2
Fires
  Class A (definition) 3.3.2.1
  Class B (definition) 3.3.2.2
  Combination Class A and Class B 1.3.1, A.1.3.1
  Unsuitable for foam use 1.3.3, A.1.3.1
Fittings, pipe 5.8, A.5.8.2, A.5.8.3
Flammable liquids
  Applicability to hazards of 1.3.2
  Drainage of spills 7.3.6
Fluoroprotein foam concentrate A.1.2
  Definition .... 3.3.6.4, A.3.3.6.4; *see also* Film-forming fluoroprotein foam concentrate
Flushing
  Foam concentrate pumps 5.5.4, A.5.5.4.1
  Foam-water deluge systems 8.4.2, A.8.4.2.1
  Strainers 5.11.1, 5.11.3.4
  Supply piping 8.1, A.8.1
Foam
  Contamination by 1.3.5, 6.2.2, 8.4.1.5, A.1.3.5
  Definition 3.3.3, A.3.3.3
  Uses of ..... 1.3, A.1.3.1 to A.1.3.5
Foam concentrates ..... 5.3, A.5.3.1 to A.5.3.3
  Approval for use 4.6.2
  Compatibility of 5.3.1, 5.8.2, 6.1.1, A.1.3.1, A.5.3.1, A.5.8.2
  Contamination by 1.3.5, 6.2.2, 8.4.1.5, A.1.3.5
  Definition 3.3.6, A.3.3.6
  Foam solution concentration determination ..... Annex B
  Lines 7.3.5, A.7.3.5.1, A.8.1
  Listed 5.1, 5.2.1, 5.3.1, A.1.3.4, A.5.3.1
  Preprimed systems .....*see* Preprimed systems
  Proportioning means .....*see* Proportioning systems
  Replacement/reserve supply 4.4, 5.3.1.1, 5.3.3, A.4.4, A.5.3.3
  Simulated 8.4.1.5
  For solvent fires 1.3.4, A.1.3.4

Copyright National Fire Protection Association
Provided by IHS under license with NFPA
No reproduction or networking permitted without license from IHS
Not for Resale

Storage of ..... 5.3.1.2, A.5.3.1.2; *see also* Tanks, foam concentrate storage
Strainers for 5.11.2, 5.11.3, A.5.11.2
Valves
Compatibility of 5.8.2, A.5.8.2
Location 5.9
Supervision of 5.13.1, A.5.13.1
Foam solutions
Compatibility of .....*see* Foam concentrates, Compatibility of
Contamination by 1.3.5, 6.2.2, A.1.3.5
Definition 3.3.7, A.3.3.7
Dilution of ..... 6.2.5.2(3)
Discharge of ..... 1.3.1, 1.3.2.1 to 1.3.2.3, 4.3, 8.4.1.4
Foam solution concentration determination ..... Annex B
Valves
Compatibility of 5.8.2, A.5.8.2
Location 5.9
Supervision of 5.13.1, A.5.13.1
Foam-water deluge systems ..... 4.1.2, 4.2, 7.3.8, A.7.3.8.1(A), A.7.3.8.5
Automatic system detection 5.12.1
Definition 3.3.5.1, A.3.3.5.1
Discharge, test of 8.3, A.8.3.1
Discharge devices 5.2.2, A.3.3.5.1
Discharge duration, design for 7.3.3.1
Fittings 5.8.3, A.5.8.3
Flushing 8.4.2, A.8.4.2.1
Hydraulic calculations 7.4.1, A.7.4.1.4
Proportioning system testing 8.4.1.1, A.8.4
Tripping means ..... 4.1.1, 7.3.8.1, 7.3.8.6, A.7.3.8.1(A)
Foam-water density 1.3.2.1, 4.3.1, 7.3.2.1
For control and exposure protection 1.3.2.3
Definition 3.3.4
Foam-water dry pipe systems 4.2, 7.3.7
Definition 3.3.5.2, A.3.3.5.2
Discharge devices 5.2.3
Discharge duration, design for 7.3.3.1
Hydraulic calculations 7.4.2, A.7.4.2.2
Proportioning system testing 8.4.1.1, 8.4.1.4.2, A.8.4
Foam-water preaction systems 4.2, 7.3.7
Automatic system detection 5.12.2
Definition 3.3.5.3, A.3.3.5.3
Discharge devices 5.2.3
Discharge duration, design for 7.3.3.1
Hydraulic calculations 7.4.2, A.7.4.2.2
Proportioning system testing 8.4.1.1, 8.4.1.4.2, A.8.4
Tripping means ..... 4.1.1, 7.3.8.1, A.7.3.8.1(A)
Foam-water solution, prepriming with 4.5, A.4.5
Foam-water spray nozzles .....*see* Discharge devices
Foam-water spray systems (definition) 3.3.5.4, A.3.3.5.4
Foam-water sprinkler nozzles .....*see* Discharge devices
Foam-water sprinklers .....*see* Discharge devices
Foam-water sprinkler systems (definition) 3.3.5, A.3.3.5
Foam-water wet pipe systems 4.2, 7.3.7
Discharge devices 5.2.3
Discharge duration, design for 7.3.3.1
Hydraulic calculations 7.4.2, A.7.4.2.2
Prepriming of 4.5, 5.3.2.1
Proportioning system testing 8.4.1.1, 8.4.1.4.2, A.8.4
Friction losses ..... 7.4.1.2, 7.4.1.4, 7.4.1.5, 7.4.2.4 to 7.4.2.6, 7.4.3, A.7.4.14

-G-

Gases, liquefied or compressed 1.3.3, A.1.3.1
General system information 4.1

-H-

Hangers 5.8, A.5.8.2, A.5.8.3
Hazardous materials 1.3.2.2, 1.3.3, A.1.3.1
High-expansion foam A.1.1.2, A.1.2, A.3.3.3
High-expansion foam concentrate ....*see* Medium- and high-expansion foam concentrate
Hydraulic calculations ..... 7.4, 8.4.2.1, 8.5(2), A.7.4.1.4, A.8.4.2.1
Hydrostatic pressure tests 8.2, A.8.2.1

-I-

Injection systems, foam concentrate ..... 5.4.1 to 5.4.3, 7.3.8.2, A.5.4.2, A.5.4.3(3)
In-line eductors ..... 5.4.3(3), A.5.4.3(3)
Inspections ..... Chap. 9; *see also* Tests
Installation ..... Chap. 7
Instructions 8.5

-L-

Liquefied gas 1.3.3, A.1.3.1
Listed (definition) ... 3.2.3, A.3.2.3; *see also* Foam concentrates, Listed
Location of equipment 5.9
Low-expansion foam 1.1.2, A.1.2, A.3.3.3

-M-

Mains, underground, flushing 8.1, A.8.1
Maintenance ..... Chap. 9
Manual operation 4.1.1, 4.1.2, 4.3.2
For hazardous material accumulations 1.3.2.2
System design ..... 7.3.8.1(B), 7.3.8.2(B), 7.3.8.6
Measurement, units of 1.6
Medium- and high-expansion foam concentrate (definition) 3.3.6.5, A.3.3.6.5
Medium-expansion foam A.1.1.2, A.1.2, A.3.3.3

-N-

Non-air-aspirating devices 5.2.2, 5.2.3
Nozzles .....*see* Discharge devices

-O-

Orifice plates ..... 5.4.2(4), 5.4.4
Other synthetic foam concentrate (definition) 3.3.6.6, A.3.3.6.6

-P-

Periodic tests ..... Chap. 9
Piping ..... 5.8, 8.5(2), A.5.8.2, A.5.8.3
Foam concentrate lines 7.3.5, A.7.3.5.1, A.8.1
Hydraulic calculations 7.4, A.7.4.1.4
Hydrostatic testing 8.2, A.8.2.1
Supply, flushing of 8.1, A.8.1
Underground, testing of 8.2.2
Plans 4.6.2, 7.2
Positive pressure proportioning ..... 5.4.1, 5.4.3(1), 8.4.1.1.1, 8.4.1.4, A.8.4
Power supply 5.6
Preaction systems .....*see* Foam-water preaction systems
Preprimed systems 4.5, 5.3.2.1
Definition 3.3.5.5, A.3.3.5.5
Pressure-proportioning tanks ..... 5.4.2(2), 5.7.4, 8.4.1.1.1, A.5.7.4.1, A.8.4
Proportioning (definition) 3.3.8
Proportioning systems ..... 5.3.1, 5.4, A.5.3.1, A.5.4.2 to A.5.4.4
Dilution of foam solution ..... 6.2.5.2(3)
Fire department connections 6.2.5, 6.2.5.3, A.6.2.5.1
Imbalance of ..... 6.2.5.2(2)
Location 5.9
Selection of 7.3.4
Test connections 5.14, A.5.14
Testing 8.4, A.8.4
Protein foam concentrate A.1.2
Definition 3.3.6.7, A.3.3.6.7

--`,,```,,,,````-`-`,,`,,`,`,,`---

Copyright National Fire Protection Association
Provided by IHS under license with NFPA
No reproduction or networking permitted without license from IHS
Not for Resale

Pumps, foam concentrate ..... 5.4.2, 5.4.3, 5.5, A.5.4.2, A.5.4.3(3), A.5.5, A.8.4
Controllers 5.6
Drivers 5.6
Location 5.9
Pumps, water 5.9
Purpose of standard 1.2, A.1.2

-R-

Rate ..... *see* Discharge, Rate
Referenced standards, for design 7.3.1, A.7.3.1
References ..... Chap. 2, Annex C
Retroactivity of standard 1.4

-S-

Scope of standard 1.1, A.1.1.2
Shall (definition) 3.2.4
Should (definition) 3.2.5
SI units 1.6
Solutions, foam ..... *see* Foam solutions
Solvents, water-soluble and polar 1.3.4, A.1.3.4
Specifications, system 4.6.2, 7.2
Spray nozzles ..... *see* Discharge devices
Sprinklers ..... *see* Discharge devices
Standard (definition) 3.2.6
Storage, foam concentrate ..... 5.3.1.2, A.5.3.1.2, A.8.4; *see also* Tanks, foam concentrate storage
Strainers 5.11, 6.1.2, A.5.11.2, A.8.4.3.1
Supervision
Of detection and actuation circuitry 5.13.2
Of valves 5.13.1, A.5.13.1
Synthetic foam concentrate (definition) 3.3.6.8
System components ..... Chap. 5
System design ..... Chap. 7
Design criteria 7.3
Working plans and specifications 4.6.2, 7.2

-T-

Tanks, foam concentrate storage 5.7, A.5.7.3.4
Atmospheric-type 5.7.3, A.5.7.3.4
Bladder tanks ..... 5.4.2(2), 5.4.2(3), 8.2.1.2, 8.4.1.1.1, A.8.4
Location 5.9
Pressure-proportioning tanks ..... *see* Pressure-proportioning tanks
Test connections 5.14, A.5.14
Tests
Acceptance ..... Chap. 8, A.1.3.4
Alarms 9.2
Conductivity method 8.4.2.2, B.1
Detection devices 9.2
Foam discharge 8.3, A.8.3.1
Foam solution concentration determination B.2
Foam-water sprinkler systems 9.1, 9.3, A.9.1, A.9.3
Frequency of 9.3, A.9.3
Hydrostatic pressure 8.2, A.8.2.1
Periodic ..... Chap. 9
Proportioning equipment 8.4, A.8.4
Refractive index method B.3

-U-

Underground pipe
Mains, flushing 8.1, A.8.1
Testing 8.2.2
Units of measurement 1.6

-V-

Vacuum induction proportioning A.8.4
Valves 5.8, A.5.8.2, A.5.8.3
Location 5.9
Supervision 5.13.1, A.5.13.1
Water deluge ..... 7.3.8.1, A.7.3.8.1(A)

-W-

Water, reactions with 1.3.3, A.1.3.1
Water supplies ..... Chap. 6
Capacity, pressure, and duration 6.2, A.6.2.2
Compatibility of 5.8.2, 6.1.1, A.5.8.2
Contamination by foam 1.3.5, 6.2.2, A.1.3.5
Discharge of ..... 1.3.2.1 to 1.3.2.3, 4.3, 8.4.1.4
Quality of water 6.1, A.6.1
Signs on 6.2.5.3
Strainers 5.11.1, 6.1.2
Valves
Compatibility 5.8.2, A.5.8.2
Location 5.9

Copyright National Fire Protection Association
Provided by IHS under license with NFPA
No reproduction or networking permitted without license from IHS
Not for Resale

Sequence of Events Leading to Issuance of an NFPA Committee Document

Step 1: Call for Proposals

- Proposed new Document or new edition of an existing Document is entered into one of two yearly revision cycles, and a Call for Proposals is published.

Step 2: Report on Proposals (ROP)

- Committee meets to act on Proposals, to develop its own Proposals, and to prepare its Report.
- Committee votes by written ballot on Proposals. If two-thirds approve, Report goes forward. Lacking two-thirds approval, Report returns to Committee.
- Report on Proposals (ROP) is published for public review and comment.

Step 3: Report on Comments (ROC)

- Committee meets to act on Public Comments to develop its own Comments, and to prepare its report.
- Committee votes by written ballot on Comments. If two-thirds approve, Report goes forward. Lacking two-thirds approval, Report returns to Committee.
- Report on Comments (ROC) is published for public review.

Step 4: Technical Report Session

- "*Notices of intent to make a motion"* are filed, are reviewed, and valid motions are certified for presentation at the Technical Report Session. ("Consent Documents" that have no certified motions bypass the Technical Report Session and proceed to the Standards Council for issuance.)
- NFPA membership meets each June at the Annual Meeting Technical Report Session and acts on Technical Committee Reports (ROP and ROC) for Documents with "certified amending motions."
- Committee(s) vote on any amendments to Report approved at NFPA Annual Membership Meeting.

Step 5: Standards Council Issuance

- Notification of intent to file an appeal to the Standards Council on Association action must be filed within 20 days of the NFPA Annual Membership Meeting.
- Standards Council decides, based on all evidence, whether or not to issue Document or to take other action, including hearing any appeals.

Committee Membership Classifications

The following classifications apply to Technical Committee members and represent their principal interest in the activity of the committee.

M *Manufacturer:* A representative of a maker or marketer of a product, assembly, or system, or portion thereof, that is affected by the standard.

U *User:* A representative of an entity that is subject to the provisions of the standard or that voluntarily uses the standard.

I/M *Installer/Maintainer:* A representative of an entity that is in the business of installing or maintaining a product, assembly, or system affected by the standard.

L *Labor:* A labor representative or employee concerned with safety in the workplace.

R/T *Applied Research/Testing Laboratory:* A representative of an independent testing laboratory or independent applied research organization that promulgates and/or enforces standards.

E *Enforcing Authority:* A representative of an agency or an organization that promulgates and/or enforces standards.

I *Insurance:* A representative of an insurance company, broker, agent, bureau, or inspection agency.

C *Consumer:* A person who is, or represents, the ultimate purchaser of a product, system, or service affected by the standard, but who is not included in the *User* classification.

SE *Special Expert:* A person not representing any of the previous classifications, but who has a special expertise in the scope of the standard or portion thereof.

NOTES;
1. "Standard" connotes code, standard, recommended practice, or guide.
2. A representative includes an employee.
3. While these classifications will be used by the Standards Council to achieve a balance for Technical Committees, the Standards Council may determine that new classifications of members or unique interests need representation in order to foster the best possible committee deliberations on any project. In this connection, the Standards Council may make appointments as it deems appropriate in the public interest, such as the classification of "Utilities" in the National Electrical Code Committee.
4. Representatives of subsidiaries of any group are generally considered to have the same classification as the parent organization.

Copyright National Fire Protection Association
Provided by IHS under license with NFPA
No reproduction or networking permitted without license from IHS
Not for Resale

NFPA Technical Committee Document Proposal Form

NOTE: All Proposals must be received by 5:00 pm EST/EDST on the published Proposal Closing Date.

For further information on the standards-making process, please contact the Codes and Standards Administration at 617-984-7249 or visit www.nfpa.org/codes.

For technical assistance, please call NFPA at 617-770-3000.

FOR OFFICE USE ONLY

Log #:

Date Rec'd:

Please indicate in which format you wish to receive your ROP/ROC ☐ **electronic** ☐ **paper** ☒ **download**
(Note: If choosing the download option, you must view the ROP/ROC from our website; no copy will be sent to you.)

Date April 1, 200X **Name** John J. Doe **Tel. No.** 716-555-1234

Company Air Canada Pilot's Association

Street Address 123 Summer Street Lane **City** Lewiston **State** NY **Zip** 14092

Please indicate organization represented (if any)

1. (a) NFPA Document Title National Fuel Gas Code **NFPA No. & Year** 54, 200X Edition

(b) Section/Paragraph 3.3

2. Proposal Recommends (check one): ☐ new text ☒ revised text ☐ deleted text

3. Proposal (include proposed new or revised wording, or identification of wording to be deleted): [Note: Proposed text should be in legislative format; i.e., use underscore to denote wording to be inserted (inserted wording) and strike-through to denote wording to be deleted (~~deleted wording~~).]

Revise definition of effective ground-fault current path to read:

3.3.78 Effective Ground-Fault Current Path. An intentionally constructed, permanent, low impedance electrically conductive path designed and intended to carry ~~underground~~ electric fault current ~~conditions~~ from the point of a ground fault on a wiring system to the electrical supply source.

4. Statement of Problem and Substantiation for Proposal: (Note: State the problem that would be resolved by your recommendation; give the specific reason for your Proposal, including copies of tests, research papers, fire experience, etc. If more than 200 words, it may be abstracted for publication.)

Change uses proper electrical terms.

5. Copyright Assignment

(a) ☐ **I am the author of the text or other material (such as illustrations, graphs) proposed in this Proposal.**

(b) ☒ **Some or all of the text or other material proposed in this Proposal was not authored by me. Its source is as follows** (please identify which material and provide complete information on its source)**:**

ABC Co.

I agree that any material that I author, either individually or with others, in connection with work performed by an NFPA Technical Committee shall be considered to be works made for hire for the NFPA. To the extent that I retain any rights in copyright as to such material, or as to any other material authored by me that I submit for the use of an NFPA Technical Committee in the drafting of an NFPA code, standard, or other NFPA document, I hereby grant and assign all and full rights in copyright to the NFPA. I further agree and acknowledge that I acquire no rights in any publication of the NFPA and that copyright and all rights in materials produced by NFPA Technical Committees are owned by the NFPA and that the NFPA may register copyright in its own name.

Signature (Required)

PLEASE USE SEPARATE FORM FOR EACH PROPOSAL • NFPA Fax: (617) 770-3500

Mail to: Secretary, Standards Council, National Fire Protection Association, 1 Batterymarch Park, Quincy, MA 02169-7471

1/19/2007

SAMPLE

Copyright National Fire Protection Association
Provided by IHS under license with NFPA
No reproduction or networking permitted without license from IHS
Not for Resale

NFPA Technical Committee Document Proposal Form

NOTE: All Proposals must be received by 5:00 pm EST/EDST on the published Proposal Closing Date.

For further information on the standards-making process, please contact the Codes and Standards Administration at 617-984-7249 or visit www.nfpa.org/codes.

For technical assistance, please call NFPA at 617-770-3000.

FOR OFFICE USE ONLY

Log #: _____

Date Rec'd: _____

Please indicate in which format you wish to receive your ROP/ROC ☐ electronic ☐ paper ☐ download
(Note: If choosing the download option, you must view the ROP/ROC from our website; no copy will be sent to you.)

Date _____ **Name** _____ **Tel. No.** _____

Company _____

Street Address _____ **City** _____ **State** _____ **Zip** _____

Please indicate organization represented (if any) _____

1. (a) NFPA Document Title _____ **NFPA No. & Year** _____

(b) Section/Paragraph _____

2. Proposal Recommends (check one): ☐ new text ☐ revised text ☐ deleted text

3. Proposal (include proposed new or revised wording, or identification of wording to be deleted): [Note: Proposed text should be in legislative format; i.e., use underscore to denote wording to be inserted (inserted wording) and strike-through to denote wording to be deleted (~~deleted wording~~).]

4. Statement of Problem and Substantiation for Proposal: (Note: State the problem that would be resolved by your recommendation; give the specific reason for your Proposal, including copies of tests, research papers, fire experience, etc. If more than 200 words, it may be abstracted for publication.)

5. Copyright Assignment

(a) ☐ I am the author of the text or other material (such as illustrations, graphs) proposed in this Proposal.

(b) ☐ Some or all of the text or other material proposed in this Proposal was not authored by me. Its source is as follows (please identify which material and provide complete information on its source)**:**

_____

I agree that any material that I author, either individually or with others, in connection with work performed by an NFPA Technical Committee shall be considered to be works made for hire for the NFPA. To the extent that I retain any rights in copyright as to such material, or as to any other material authored by me that I submit for the use of an NFPA Technical Committee in the drafting of an NFPA code, standard, or other NFPA document, I hereby grant and assign all and full rights in copyright to the NFPA. I further agree and acknowledge that I acquire no rights in any publication of the NFPA and that copyright and all rights in materials produced by NFPA Technical Committees are owned by the NFPA and that the NFPA may register copyright in its own name.

Signature (Required) _____

PLEASE USE SEPARATE FORM FOR EACH PROPOSAL • NFPA Fax: (617) 770-3500

Mail to: Secretary, Standards Council, National Fire Protection Association, 1 Batterymarch Park, Quincy, MA 02169-7471

1/19/2007

Copyright National Fire Protection Association
Provided by IHS under license with NFPA
No reproduction or networking permitted without license from IHS
Not for Resale